0000096339

ride the light

Qwest

Qwest Corporation
3033 North Third Street
Room 1010
Phoenix, Arizona 85012
Office: 602-630-8255
Fax: 602-235-3107

Monica Luckritz
Manager-Regulatory Matters

RECEIVED
2001 MAR 15 P 4:49
AZ CORP COMMISSION
DOCUMENT CONTROL

March 15, 2001

Arizona Corporation Commission
DOCKETED
MAR 1 5 2001
DOCKETED BY

Ms. Lyn Farmer
Chief Hearing Officer
Arizona Corporation Commission
1200 West Washington Street
Phoenix, Arizona 85007

RE: Docket No. T-00000A-00-0194

Dear Ms. Farmer:

Pursuant to the procedural order dated February 15, 2001, enclosed please find one original and ten copies of Qwest's direct testimony for the following witnesses:

Renee Albersheim
Maureen Arnold
Barbara Brohl
Larry Brotherson
Dick Buckley
Joseph Craig
William Fitzsimmons
Marti Gude
Robert Kennedy
Teresa Million
James Overton
Dr. William Taylor

Qwest witnesses will be filing additional direct testimony, pursuant to the above-mentioned procedural order, on April 16, 2001.

Please let me know if you have any questions.

Sincerely,

Monica Luckritz

Enclosures

ORIGINAL

BEFORE THE ARIZONA CORPORATION COMMISSION

WILLIAM A. MUNDELL
CHAIRMAN
JIM IRVIN
COMMISSIONER
MARC SPITZER
COMMISSIONER

Arizona Corporation Commission
DOCKETED
MAR 1 5 2001
DOCKETED BY nac

RECEIVED
2001 MAR 15 P 4:50
AZ CORP COMMISSION

IN THE MATTER OF INVESTIGATION INTO QWEST CORPORATION'S COMPLIANCE WITH CERTAIN WHOLESALE PRICING REQUIREMENTS FOR UNBUNDLED NETWORK ELEMENTS AND RESALE DISCOUNTS	)	DOCKET NO. T-00000A-00-0194 PHASE II

DIRECT TESTIMONY OF

MAUREEN ARNOLD

ON BEHALF OF

QWEST CORPORATION

MARCH 15, 2001

SUMMARY

Qwest believes the cost-based prices proposed in this docket are consistent with the Act, and the FCC's Total Element Long Run Incremental Cost ("TELRIC") pricing rules established in its First Report and Order. Qwest also believes that the adoption of these prices will not only allow Qwest to recover its costs to provide interconnection and unbundled network elements (UNEs), but also will provide the CLECs with a full and fair opportunity to compete in the Arizona local exchange market.

Qwest is addressing cost and prices that fall into two general categories. The first deals with the FCC, United States District Court, and the Commission orders that require price considerations for new network elements or the reconsideration of prices previously set by the Commission. The second introduces cost studies and related evidence supporting several new products and services that have evolved pursuant to CLECs needs for interconnection and access to unbundled network elements (UNEs).

Qwest witnesses will be presenting costing and pricing evidence in this proceeding for network elements, collocation, and other interconnection products and services. In addition, evidence will be presented that discusses the issue of reciprocal compensation for ISP traffic and other pricing issues including market

based pricing. Finally, Qwest will be presenting proposed additional wholesale discounts.

The Commission should set prices for Interconnection services and unbundled network elements (UNEs) at the TELRIC costs plus a reasonable allocation of common costs, thereby affording Qwest a fair opportunity to compete in the marketplace and earn a reasonable return on its investment in Arizona. Qwest believes that adoption of these prices will support the expansion of long-term, sustainable competition in the market, ensure appropriate continued Arizona network investment and provide Qwest with the cost recovery required by the Act.

DIRECT TESTIMONY OF MAUREEN ARNOLD

INDEX OF TESTIMONY

IDENTIFICATION OF WITNESS 1

BACKGROUND 2

CONCLUSION 8

IDENTIFICATION OF WITNESS

Q. PLEASE STATE YOUR NAME AND BUSINESS ADDRESS.

A. My name is Maureen Arnold. My business address is 3033 N 3rd St, Phoenix, Arizona 85012.

Q. WHAT IS YOUR POSITION WITH QWEST, AND WHAT ARE YOUR RESPONSIBILITIES?

A. I am Director of Regulatory Affairs for Qwest Corporation ("Qwest") for the state of Arizona. My responsibilities include managing Qwest's participation in regulatory proceedings before this Commission.

Q. PLEASE DESCRIBE YOUR EDUCATIONAL BACKGROUND AND WORK EXPERIENCE?

A I have a Bachelor of Science Degree from the University of New Mexico and a Masters of Business Administration from Webster University. I began my career with C&P Telephone in Washington, D.C. in 1972 and in 1975 transferred to Mountain Bell (now Qwest) in Albuquerque, New Mexico. I held various positions in the customer services area until 1985. Since 1985, I have held several positions in Regulatory Affairs in New Mexico and Arizona. I have been in my present assignment since June 1997.

Q. HAVE YOU PREVIOUSLY APPEARED BEFORE THIS COMMISSION AS A WITNESS IN REGULATORY PROCEEDINGS?

A. Yes. I have testified before this Commission on behalf of Qwest in several proceedings.

Q. WHAT IS THE PURPOSE OF YOUR TESTIMONY?

A. My testimony is intended to serve two purposes. First, I provide the background for Qwest's proposals in Phase II. Second, through Exhibit MA-1, I identify the specific elements and services for which rates must be determined in this proceeding and list the Qwest witnesses who are presenting testimony in support of those rates.

BACKGROUND

Q. PLEASE DESCRIBE THE GENERAL CATEGORIES OF COSTS AND PRICES THAT QWEST IS PRESENTING IN THIS DOCKET.

A. The costs and prices presented by Qwest in this docket fall into two categories. First, since the entry of the Commission's order in the previous generic wholesale cost proceeding ("the Cost Order"), the United States District Court in Docket No. CF 97-26-PHX-RGS-OMP, the FCC, and this Commission have issued orders that require the consideration of prices for new network elements or the reconsideration of prices previously set by this Commission. For example, the FCC orders issued since the Commission's previous order require ILECs to provide subloops, dark fiber, the high frequency portion of the unbundled loop and other new network elements. Additionally, the United States District Court in its review of the previous decision ordered this Commission to reconsider several issues including reconsideration of the wholesale discounts set by this Commission.

Second, Qwest's experiences with CLECs since the cost docket was completed has provided further insight into the products and services that CLECs require for interconnection and access to unbundled network elements (UNEs). As the CLECs' needs have evolved and become further defined, Qwest has responded by developing several new products and services. Qwest is presenting cost studies and related evidence for these new products and services.

Q. PLEASE DESCRIBE THE RELATIONSHIP BETWEEN THIS PROCEEDING AND THE ISSUES THE COMMISSION DECIDED IN THE PREVIOUS COST DOCKET.

A. This docket began to consider appropriate deaveraged prices for unbundled loops. In Phase I of the docket, the Commission set interim deaveraged loop rates and ordered that permanent deaveraged rates be set in Phase II. Under the Procedural Order of February 15, 2001, Qwest is required to file not only prices and related cost studies for new services and issues remanded by the United States District Court, but also file updated cost studies with respect to all of the products and services for which rates were set in the Cost Order. In other words, Qwest is filing a complete schedule of prices for interconnection, resale and purchase of UNEs.

Q. PLEASE DESCRIBE THE ISSUES THAT WERE REMANDED TO THE COMMISSION BY THE UNITED STATES DISTRICT COURT THAT ARE NOT CURRENTLY PENDING ON APPEAL TO THE NINTH CIRCUIT AND WHICH ARE BEFORE THE COMMISSION IN THIS DOCKET.

A. The District Court remanded a number of issues to the Commission for reconsideration or further explanation. Several of these issues were appealed to the Ninth Circuit, which has not yet decided those issues. The remanded issues that were not appealed are included in this Phase of the docket. The Court ordered the Commission to consider further disaggregation of the discounts paid by CLECs who wish to purchase Qwest's services for resale. It also required the Commission to reconsider the customer transfer charge it had established in the Cost Order.

Q. WHAT ARE SOME OF THE DEVELOPMENTS THAT LED TO QWEST INCLUDING NEW UNBUNDLED NETWORK ELEMENTS AND SERVICES THAT WERE NOT CONSIDERED IN THE PREVIOUS COST DOCKET?

A. In January 1999, the United States Supreme Court issued its decision in AT&T Corp. v. Iowa Utils. Bd.[1] In that decision, the United States Supreme Court ordered the FCC to reconsider the list of UNEs that it had required ILECs to make available to CLECs. In response to the Supreme Court's decision, on November 5, 1999, the FCC released the Third Report and Order and Fourth Further Notice of Proposed Rulemaking in In the Matter of the Implementation of the Local Competition Provisions of the Telecommunications Act of 1996, CC Docket 96-98 ("UNE Remand Order") which established the following list of UNEs that ILECs must provide to CLECs: loops; subloops; network interface devices; local circuit switching; dedicated interoffice transmission facilities, including dark fiber; signaling and call-related databases; and operations support systems ("OSS"). The FCC also concluded that ILECs are not required to unbundle the following network elements: operator services and directory assistance; shared transport in circumstances where the ILEC is not required to provide unbundled local circuit switching (for end users with four or more lines within density zone 1 in the top 50 metropolitan statistical areas if the CLECs provide access to combinations of loop and transport [enhanced extended link or EEL]); and packet switching.[2]

Q. IS QWEST PRESENTING COST STUDIES AND PROPOSED PRICES FOR NEW UNBUNDLED NETWORK ELEMENTS IN RESPONSE TO THE FCC'S UNE REMAND ORDER?

A. Yes. The cost studies and evidence that Qwest is presenting for subloops, interoffice transport, dark fiber, signaling, and UNE combinations are in direct response to the requirements of the UNE Remand Order.

---

[1] **525 U.S. 366 (1999)**
[2] UNE Remand Order at pp. 11-14.

Q. PLEASE IDENTIFY THE OTHER FCC ORDERS THAT HAVE DEFINED THE NETWORK ELEMENTS AND SERVICES THAT QWEST IS SUBMITTING IN THIS PROCEEDING.

A. In addition to the UNE Remand Order, there are two other FCC orders that bear directly on the network elements and services for which Qwest is seeking to have prices established in this proceeding. First, on March 31, 1999, the FCC released its First Report and Order in In the Matters of Deployment of Wireline Services Offering Advanced Telecommunications Capability, CC Docket 98-147 ("the Advanced Services Order"). That Order resulted in significant changes in the law relating to the collocation facilities and services that ILECs must provide to CLECs. These requirements led to significant additions to Qwest's collocation offerings, including cageless collocation elements, terminations, security, and certain power cable offerings. These new offerings are described in the testimony of Qwest witness, Robert Kennedy. Qwest's cost witness, Terri Million, presents the cost studies and related evidence for these elements.

Second, in In the Matters of Deployment of Wireline Services Offering Advanced Telecommunications Capability and Implementation of the Local Competition Provisions of the Telecommunications Act of 1996, Third Report and Order in CC Docket No. 98-147 and Fourth Report and Order in CC Docket No. 96-98 (Rel. Dec. 9, 1999) ("Line Sharing Order"), the FCC required ILECs to unbundle the high frequency portion of the loop and to make it available, under certain conditions, to CLECs as an unbundled network element. Qwest's submissions in this docket include evidence establishing the costs and appropriate prices for the line sharing UNE and for the collocation elements and activities that line sharing requires. This evidence is set forth in the testimony of Qwest witnesses, Ms. Million, James Overton, and Dr. William Fitzsimmons.

Q. IS QWEST PROVIDING A LIST OF THE NETWORK ELEMENTS, INTERCONNECTION SERVICES, AND OTHER SERVICES FOR WHICH IT IS SEEKING TO ESTABLISH PRICES IN THIS DOCKET?

A. Yes. Exhibit MA-1, attached to my testimony, is a list of the network elements and interconnection facilities and services for which Qwest is presenting costing and pricing evidence in this docket. This exhibit includes the prices that Qwest is proposing for these elements, facilities, and services.

Q. PLEASE IDENTIFY THE QWEST WITNESSES AND THE AREAS THEY COVER IN THEIR TESTIMONY.

A. I am providing an overview of Qwest's pricing proposals through Exhibit MA-1.

Terry Million is presenting Qwest's cost studies for network elements, collocation, and other interconnection products and services. She explains the cost methodologies that underlie the prices Qwest is proposing and how those methodologies comply with the requirements of the Act and the FCC orders. Ms. Million also sponsors Qwest's proposal for deaveraged unbundled loop rates.

Robert Kennedy and Barbara Brohl will testify concerning the prices developed from the cost studies sponsored by Ms. Million. Mr. Kennedy describes Qwest's proposed prices for collocation, interconnection products and services, and certain UNEs. He will also address the BFR process proposed by Qwest. Ms. Brohl describes the prices Qwest has developed for switching, signaling, line sharing, and other various UNEs.

James Overton, a network engineer, describes the network modifications, activities, and collocation steps that are needed to provide CLECs with line

sharing and supports several of the inputs used to develop Qwest's unbundled loop price. His testimony supports the costs set forth in Ms. Million's testimony relating to line sharing and the prices for line sharing included in Exhibit MA-1.

Dick Buckley describes Qwest's Loop Module that was used to develop loop costs. Dr. William Fitzsimmons provides economic testimony that supports the price that Qwest is proposing for the high frequency portion of the loop.

Renee Albersheim provides testimony concerning Qwest's OSS costs related to line sharing.

Qwest witnesses Brotherson, Taylor and Craig discuss the issue of reciprocal compensation for ISP traffic. Larry Brotherson discusses Qwest's position on reciprocal compensation for ISP traffic and also discusses other pricing issues including market-based pricing. Dr. William Taylor provides the economic rationale underlying Qwest's reciprocal compensation proposal. Joe Craig provides technical testimony in connection with reciprocal compensation for ISP traffic.

Finally, Marti Gude testifies concerning the wholesale discounts that Qwest is proposing for CLECs that wish to resell Qwest services.

Q. WHAT ARE QWEST'S OVERALL RECOMMENDATIONS IN THIS PROCEEDING?

A. Qwest has two general recommendations. First, Qwest recommends that the Commission adopt the Total Element Long Run Incremental Cost ("TELRIC") studies presented with the testimony of Ms. Million. As Ms. Million testifies, these studies comply with the pricing rules the FCC established in its First Report and Order. In addition to complying with the FCC's pricing rules, the testimony of Ms. Million and Qwest's other witnesses demonstrates that the costs and prices Qwest is presenting are reasonable.

Second, Qwest recommends that the Commission set prices for interconnection services and UNEs at a level that will permit Qwest a fair opportunity to compete in the marketplace and to earn a reasonable return on its investment in Arizona. The prices for interconnection services and UNEs should be set at the TELRIC costs plus a reasonable allocation of common costs. The Commission should adopt the specific prices set forth in Exhibit MA-1.

CONCLUSION

Q. PLEASE SUMMARIZE YOUR RECOMMENDATIONS.

A. The Commission should adopt the prices set forth in Exhibit MA-1. Consistent with the Act and the FCC's pricing rules, Qwest should be permitted to recover the realistic, forward-looking costs that it incurs to provide interconnection and UNEs. The cost-based prices that Qwest is proposing will allow Qwest to recover its costs and will provide the CLECs with a full and fair opportunity to compete in the Arizona local exchange market. Adoption of these prices will support the expansion of long-term, sustainable competition in the market, ensure continued investment in the Arizona network at appropriate levels, and provide Qwest with the cost recovery that the Act requires.

Q. DOES THIS CONCLUDE YOUR TESTIMONY?

A. Yes.

BEFORE THE ARIZONA CORPORATION COMMISSION

WILLIAM A. MUNDELL
CHAIRMAN
JIM IVIN
COMMISSIONER
MARC SPITZER
COMMISSIONER

IN THE MATTER OF INVESTIGATION INTO	)	
QWEST CORPORATION'S COMPLIANCE	)	**DOCKET NO. T-00000-00-0194**
WITH CERTAIN WHOLESALE PRICING	)	**PHASE II**
REQUIREMENTS FOR UNBUNDLED	)	
NETWORK ELEMENTS AND RESALE	)	
DISCOUNTS	)	

EXHIBIT OF

MAUREEN ARNOLD

MARCH 15, 2001

ARIZONA RATES

		Recurring	Nonrecurring	Witness
6.0Resale				
6.1 Wholesale Discount Rates				Gude
6.1.1 Basic Exchange Residence	4.19%			
6.1.2 Basic Exchange Business	9.41%			
6.1.3 Toll	23.96%			
6.1.4 Listings, CO Features and Informational Services	41.51%			
6.1.5 Private Line	6.44%			
6.1.6 Packaged/Special Services	10.46%			
6.1.7 Proposed Operator Services/DA	7.00%			
6.2 Customer Transfer Charge (CTC)				Brotherson
6.2.1 CTC for POTS Service				
First Mechanized			$0.68	
Each Additional Mechanized			$0.14	
6.2.2 CTC for POTS Service				
First Manual			$16.21	
Each Additional Manual			$2.70	
6.2.3 CTC for Private Line Services				
First			$40.87	
Each Additional			$40.87	
6.2.4 CTC for Advanced Communications Services				
Per Circuit			$51.34	
7.0 Interconnection				Kennedy
7.1 Entrance Facilities				
7.1.1 DS1		$92.18	$218.84	
7.1.2 DS3		$486.15	$414.26	
7.2 LIS EICT (When used for Collocation)				Kennedy
7.2.1 Per DS1		$10.24	$161.70	
7.2.2 Per DS3		$47.99	$357.12	
7.3 Interconnection Tie Pairs (ITP) (Optional)				Kennedy
Per DS1		$1.58		
Per DS3		$15.92		
7.4 Channel Regeneration (Optional)				Kennedy
DS1 Regeneration		$9.45	$480.05	
DS3 Regeneration		$34.16	$1,807.55	
	Recurring Fixed	**Recurring Per Mile**	**Nonrecurring**	
7.5 Direct Trunked Transport				Kennedy
7.5.1 DS1				Kennedy
Over 0 to 8 Miles	$33.05	$1.56		
Over 8 to 25 Miles	$33.33	$1.26		
Over 25 to 50 Miles	$33.81	$2.28		
Over 50 Miles	$33.78	$1.19		
7.5.2 DS3				Kennedy
Over 0 to 8 Miles	$210.28	$65.55		
Over 8 to 25 Miles	$213.45	$20.30		

ARIZONA RATES

		Recurring	Nonrecurring	Witness
Over 25 to 50 Miles	$196.74	$25.43		
Over 50 Miles	$207.61	$17.49		
		Recurring	Nonrecurring	
7.6 Multiplexing				Kennedy
7.6.1 DS3 to DS1 per arrangement		$246.64	$267.45	
7.7 Trunk Nonrecurring Charge				Kennedy
7.7.1 DS1 – First Trunk			$353.67	
DS1 – Each Additional Trunk			$5.90	
7.7.2 DS3 – First Trunk			$360.45	
DS3 – Each Additional Trunk			$12.69	
7.7.3 DS1 Trunk Rearrangement				
First Trunk			$176.84	
Each Additional Trunk			$2.95	
7.7.4 DS3 Trunk Rearrangement				
First Trunk			$180.23	
Each Additional Trunk			$6.35	
7.8 Local Traffic				Kennedy
7.8.1 End office call termination, per minute of use		$0.002207		
7.8.2 Tandem Switched Transport				
7.8.2.1 Tandem Switching, per Minute of Use		$0.001653		
	Recurring Fixed	Recurring Per Mile	Nonrecurring	
7.8.2.2 Tandem Transmission				
0 to 8 Miles	$0.000485	$0.0000454		
8 to 25 Miles	$0.000494	$0.0000227		
25 to 50 Miles	$0.000477	$0.0000117		
Over 50 Miles	$0.000461	$0.0000042		
7.9 Miscellaneous Charges				Kennedy
7.9.1 Cancellation Charge (LIS Trunks)	Qwest's Arizona Switched Access Tariff Section 5.2.3 + LIS Nonrecurring Charges			
7.9.2 Expedite Charge (LIS Trunks)	Qwest's Arizona Switched Access Tariff Section 5.2.2 + LIS Nonrecurring Charges			
7.9.3 Construction Charges	ICB[4] – See SGAT Section 19.0			
7.10 IntraLATA Toll Traffic	Qwest's Arizona Switched Access Tariff			Kennedy
7.11 Transit Traffic				Kennedy
7.11.1 Local Transit	See Tandem Switching and Tandem Transmission Rates Above.			
Local Transit Assumed Mileage	9 Miles			
7.11.2 IntraLATA Toll	Qwest's Arizona Switched Access Tariff			
IntraLATA Toll Assumed Mileage	9 Miles			
7.11.3 Jointly Provided Switched Access	Qwest's Arizona Switched Access Tariff			Kennedy
7.11.4 Category 11 Mechanized Record Charge				
Per Record		$0.001819		Kennedy
8.0 Collocation				Kennedy
8.1 All Collocation				
8.1.1 Collocation Entrance Facility				
Standard – Per Fiber Pair		$15.17	$1,232.89	

ARIZONA RATES

		Recurring	Nonrecurring	Witness
Cross-Connect – Per Fiber		$22.75	$1,658.09	
Express - Per Cable		$240.26	$8,783.09	
8.1.2 Cable Splicing				Kennedy
Fiber - Per Set-Up			$474.74	
Per Fiber Spliced			$37.95	
8.1.3 -48 Volt DC Power Usage, per Ampere, per Month				Kennedy
Power Plant, per Amp		$11.36		
Power Usage Less Than 60 Amps, per Amp		$3.69		
Power Usage More Than 60 Amps, per Amp		$7.37		
8.1.4 AC Power Feed				Kennedy
8.1.4.1 AC Power Feed – per Amp, per Month				
120 Volt		$19.26		
208 Volt, Single Phase		$33.38		
208 Volt, Three Phase		$57.75		
240 Volt, Single Phase		$38.52		
240 Volt, Three Phase		$66.64		
480 Volt, Three Phase		$133.28		
8.1.4.2 AC Power Cable – per Foot, per Month				Kennedy
20 Amp, Single Phase		$0.0146	$7.98	
20 Amp, Three Phase		$0.0181	$9.90	
30 Amp, Single Phase		$0.0157	$8.61	
30 Amp, Three Phase		$0.0216	$11.82	
40 Amp, Single Phase		$0.0185	$10.12	
40 Amp, Three Phase		$0.0254	$13.93	
50 Amp, Single Phase		$0.0219	$12.01	
50 Amp, Three Phase		$0.0306	$16.76	
60 Amp, Single Phase		$0.0248	$13.58	
60 Amp, Three Phase		$0.0352	$19.29	
100 Amp, Single Phase		$0.0307	$16.81	
100 Amp, Three Phase		$0.0479	$26.24	
8.1.5 Inspector Labor, per Half Hour				Kennedy
Regular Business Hours			$31.18	
Outside Regular Business Hours (3 hr. Minimum)			$38.96	
8.1.6 Interconnection Tie Pairs (ITP)				Kennedy
Per DS1		$1.58		
Per DS3		$15.92		
8.1.7 Channel Regeneration				Kennedy
DS1 Regeneration		$9.45	$480.05	
DS3 Regeneration		$34.16	$1,807.55	
8.1.8 Collocation Terminations				Kennedy
8.1.8.1 DS0				
Cable Placement per 100 Pair Block, OR		$0.5701	$243.35	
Cable Placement per Termination		$0.0107	$4.57	
Cable per 100 Pair Block, OR		$0.7333	$313.03	
Cable per Termination		$0.0100	$4.29	
Blocks per 100 Pair Block, OR		$1.2786	$545.80	

ARIZONA RATES

		Recurring	Nonrecurring	Witness
Blocks per Termination		$0.0175	$7.48	
Block Placement Per 100 Pair Block, OR		$0.5913	$252.40	
Block Placement per Termination		$0.0081	$3.46	
8.1.8.2 DS1				Kennedy
Cable Placement per 28 DS1s, OR		$0.7386	$404.75	
Cable Placement per Termination		$0.0794	$43.52	
Cable per 28 DS1s, OR		$0.6594	$361.38	
Cable per Termination		$0.0709	$38.86	
Panel per 28 DS1s , OR		$0.7525	$412.86	
Panel per Termination		$0.0908	$49.78	
Panel Placement per 28 DS1s, OR		$0.1576	$86.36	
Panel Placement per Termination		$0.0169	$ 9.29	
8.1.8.3 DS3				Kennedy
Cable Placement per Termination		$0.3007	$164.79	
Cable per Termination		$0.4258	$233.36	
Panel/Connector per Termination		$0.4388	$240.45	
Panel/Connector Placement per Termination		$0.0453	$24.81	
8.1.9 Security				Kennedy
Access Card per Employee		$0.87		
Card Access Per employee, per Office		$8.07		
8.1.10 Central Office Clock Synchronization				Kennedy
Synchronization – Composite Clock, per Port		$7.70		
8.1.11 Space Availability Report				Kennedy
Per Office			$328.00[1]	
8.2 Virtual Collocation				Kennedy
8.2.1 Quote Preparation Fee			$4,380.68	Kennedy
8.2.2 Maintenance Labor, per Half Hour				Kennedy
Regular Hours Rate			$27.97	
After Hours Rate			$37.43	
8.2.3 Training Labor, per Half Hour				Kennedy
Regular Hours Rate			$27.97	
8.2.4 Equipment Bay -recurring, per Shelf	$3.75			Kennedy
8.2.5 Engineering Labor, per Half Hour				Kennedy
Regular Hours Rate			$30.18	
After Hours Rate			$38.96	
8.2.6 Installation Labor, per Half Hour				Kennedy
Regular Hours Rate			$31.89	
After Hours Rate			$41.07	
8.2.7 Floor Space Lease, per Square Foot		$3.96		Kennedy
8.2.8 DC Power Cable	Under Development		Under Development	Kennedy

ARIZONA RATES

		Recurring	Nonrecurring	Witness
8.3 Cageless Collocation				Kennedy
8.3.1	Quotation Preparation Fee		$4,380.68	Kennedy
8.3.2	Space Construction			Kennedy
	2 Bays and 1 – 40 Amp Power Feed	$54.42	$29,823.10	
	Adjustment for 20 Amp Initial Power Feed	-($3.97)	($2,177.62)	
	Adjustment for 30 Amp Initial Power Feed	-($2.54)	($1,389.75)	
	Adjustment for 60 Amp Initial Power Feed	$3.48	$1,907.82	
	Adjustment for Each Additional Bay	$5.52	$3,024.83	
	Adjustment for Each Additional 20 Amp Power Feed	$10.09	$5,528.47	
	Adjustment for Each Additional 30 Amp Power Feed	$11.53	$6,316.35	
	Adjustment for Each Additional 40 Amp Power Feed	$14.06	$7,706.09	
	Adjustment for Each Additional 60 Amp Power Feed	$17.54	$9,613.92	
8.3.3	Floor Space Lease – Per Square Foot	$3.96		Kennedy
8.4 Caged Collocation				Kennedy
8.4.1	Quotation preparation Fee		$4,763.06	Kennedy
8.4.2	Space Construction			Kennedy
	Cage- Up to 100 Sq. Ft – 60 Amp Power Feed	$94.30	$51,675.14	
	Cage- 101- 200 Sq. Ft	$97.85	$53,623.79	
	Cage- 201- 300 Sq. Ft	$100.62	$55,139.10	
	Cage- 301- 400 Sq. Ft	$104.08	$57,038.08	
	Adjustment for 20A Initial Power Feed	($15.41)	($8,444.49)	
	Adjustment for 30A Initial Power Feed	($14.03)	($7,687.98)	
	Adjustment for 40A Initial Power Feed	($11.14)	($6,106.39)	
	Adjustment for 100A Initial Power Feed	$17.06	$9,348.19	
	Adjustment for 200A Initial Power Feed	$54.46	$29,843.97	
	Adjustment for 300A Initial Power Feed	$99.92	$54,756.39	
	Adjustment for 400A Initial Power Feed	$153.68	$84,219.54	
	Each Additional 20A Power Feed	$12.73	$6,973.86	
	Each Additional 30A Power Feed	$14.11	$7,730.36	
	Each Additional 40A Power Feed	$16.99	$9,311.95	
	Each Additional 60A Power Feed	$28.14	$15,418.34	
	Each Additional 100A Power Feed	$45.19	$24,766.54	
	Each Additional 200A Power Feed	$82.59	$45,262.31	
	Each Additional 300A Power Feed	$128.05	$70,174.74	
	Each Additional 400A Power Feed	$181.82	$99,637.89	
8.4.3	Floor Space Lease, per Square Foot	$3.96		Kennedy
8.4.4	Grounding			Kennedy
	2/0 AWG - per Foot	$0.0230	$12.59	
	1/0 AWG - per Foot	$0.0382	$20.96	
	4/0 AWG - per Foot	$0.0435	$23.81	
	350 kcmil - per Foot	$0.0603	$33.04	
	500 kcmil - per Foot	$0.0672	$36.81	
	750 kcmil – per Foot	$0.1029	$56.40	
8.5 ICDF Collocation		See Note 2		Kennedy
8.6 Adjacent Collocation		ICB[4]	ICB[4]	Kennedy
8.7 Remote Collocation and Adjacent Remote Collocation		ICB[4]	ICB[4]	Kennedy
8.8 CLEC-to-CLEC Connections				Kennedy

ARIZONA RATES

		Recurring	Nonrecurring	Witness
8.8.1	Design Engineering & Installation – No Cables		$1,353.22	Kennedy
8.8.2	Cable Racking (Per Foot)			Kennedy
	DS0	$0.17316		
	DS1	$0.18388		
	DS3	$0.15906		
8.8.3	Virtual Connections - No Cables			Kennedy
	DS0 (Per 100 Connections)		$223.03	
	DS1 (Per 28 Connections)		$101.73	
	DS3 (Per 1 Connection)		$8.80	
8.8.4	Cable Hole		$425.99	Kennedy
8.8.5	CLEC to CLEC Cross-Connection		$255.25	Kennedy
9.0 Unbundled Network Elements (UNEs)				Kennedy
9.1 Interconnection Tie Pairs (ITP) – Per Termination				Kennedy
DS0		$0.51		
DS1		$1.58		
DS3		$15.92		
9.2 Unbundled Loops				Kennedy
9.2.1	Analog Loops			Kennedy
	2-Wire Voice Grade			
	Zone 1	$23.07		
	Zone 2	$28.64		
	Zone 3	$42.14		
	4-Wire Voice Grade			
	Zone 1	$46.63		
	Zone 2	$57.76		
	Zone 3	$84.76		
9.2.2	Non-Loaded Loops			Kennedy
	2-Wire Non-loaded Loop			
	Zone 1	$23.07		
	Zone 2	$28.64		
	Zone 3	$42.14		
	4-Wire Non-loaded Loop			
	Zone 1	$46.63		
	Zone 2	$57.76		
	Zone 3	$84.76		
9.2.3	Conditioning - Cable Unloading/Bridge Tap Removal		$649.98	Kennedy
9.2.4	Digital Capable Loops			Kennedy
9.2.4.1	Basic Rate ISDN Capable Loop/xDSL-I/ADSL			
	Zone 1	$23.07		
	Zone 2	$28.64		
	Zone 3	$42.14		
9.2.4.2	DS1 Capable Loop			Kennedy
	Zone 1	$89.89		

		Recurring	Nonrecurring	Witness
	Zone 2	$90.46		
	Zone 3	$100.30		
9.2.4.3	DS3 Capable Loop			Kennedy
	Zone 1	$954.79		
	Zone 2	$967.83		
	Zone 3	$1,189.60		
9.2.5	2-Wire Extension Technology	$5.93		Kennedy
9.2.6	DS0 Basic Installation-2/4 Wire			Kennedy
	First Loop		$87.91	
	Each Additional Loop		$75.74	
	Basic Installation with Performance Testing			
	First Loop		$191.45	
	Each Additional Loop		$137.36	
	Coordinated Installation with Cooperative Testing			
	First Loop		$231.24	
	Each Additional Analog Loop		$137.36	
	Coordinated Installation without Cooperative Testing			
	First Loop		$94.96	
	Each Additional Loop		$82.79	
	Basic Installation with Cooperative Testing			
	First Loop		$191.45	
	Each Additional Loop		$137.36	
9.2.7	DS1 Loop Installation Charges			Kennedy
	Basic Installation			
	First Loop		$143.52	
	Each Additional Loop		$110.31	
	Basic Installation with Performance Testing			
	First Loop		$276.96	
	Each Additional Loop		$202.83	
	Coordinated Installation with Cooperative Testing			
	First Loop		$316.75	
	Each Additional Analog Loop		$202.83	
	Coordinated Installation without Cooperative Testing			
	First Loop		$152.59	
	Each Additional Loop		$119.37	
	Basic Installation with Cooperative Testing			
	First Loop		$276.96	
	Each Additional Loop		$202.83	
9.2.8	DS3 Loop Installation Charges			Kennedy
	Basic Installation			
	First Loop		$143.52	
	Each Additional Loop		$110.31	

		Recurring	Nonrecurring	Witness
	Basic Installation with Performance Testing			
	First Loop		$276.96	
	Each Additional Loop		$202.83	
	Coordinated Installation with Cooperative Testing			
	First Loop		$316.75	
	Each Additional Analog Loop		$202.83	
	Coordinated Installation without Cooperative Testing			
	First Loop		$152.59	
	Each Additional Loop		$119.37	
	Basic Installation with Cooperative Testing			
	First Loop		$276.96	
	Each Additional Loop		$202.83	
9.3 Subloop				Kennedy
9.3.1	Distribution Loop			
	Installation 2/4 wire, First		$120.90	
	Each Additional		$55.26	
	2-Wire Analog / Non Loaded			
	Each Additional			
	Zone 1	$15.85		
	Zone 2	$21.57		
	Zone 3	$35.23		
	4-Wire Analog / Non Loaded			
	Each Additional			
	Zone 1	$31.70		
	Zone 2	$43.14		
	Zone 3	$70.46		
9.3.2	Intrabuilding Cable Loop, Per Pair	$1.24		Kennedy
9.3.3	DS1 Capable Feeder Loops			Kennedy
	First Loop		$292.08	
	Each Additional Loop		$218.54	
	Zone 1	$77.43		
	Zone 2	$78.01		
	Zone 3	$87.85		
9.3.4	Field Connection Point			Kennedy
	Feasibility Fee/Quote Preparation Fee		$1,631.67	
	Construction Fee		ICB[4]	
9.4 Line Sharing				
9.4.1	Shared Loop, per Loop	$5.00	$37.54	Brohl
9.4.2	OSS – Per Line – Per Month	$2.74		Albersheim
9.4.3	Reclassification Charge		ICB[4]	Brohl/Overton
9.4.4	POTS Splitter TIE Cable Connections			Brohl/Overton
9.4.4.1	Splitter in the Common Area			
	Data to 410 Block	$8.57	$3,175.97	

		Recurring	Nonrecurring	Witness
Data Direct to CLEC		$8.99	$3,333.21	
9.4.4.2 Splitter on the IDF				
Data to 410 Block		$2.73	$1,010.84	
Data Direct to CLEC		$5.11	$1,892.62	
9.4.4.3 Splitter on the MDF				
Data to 410 Block		$2.81	$1,039.82	
Data Direct to CLEC		$6.03	$2,233.08	
9.4.5 Additional Testing	See Misc Charges Section 9.2.7			
9.4.6 Splitter Shelf Charge		$6.63	$531.91	Brohl
9.4.7 POTS Splitter Charge – Per Splitter	Pass through Charge to CLEC			
9.4.8 Engineering			$1,274.63	Brohl
9.5 Network Interface Device (NID)		$1.44	$68.49	Kennedy
	Recurring Fixed	**Recurring Per Mile**	**Nonrecurring**	
9.6 Unbundled Dedicated Interoffice Transport (UDIT)				Kennedy
9.6.1 DS0 UDIT			$306.61	Kennedy
Over 0 to 8 Miles	$20.93	$0.14		
Over 8 to 25 Miles	$20.95	$0.12		
Over 25 to 50 Miles	$20.99	$0.13		
Over 50 Miles	$20.94	$0.06		
9.6.2 DS1 UDIT			$351.39	Kennedy
Over 0 to 8 Miles	$33.05	$1.56		
Over 8 to 25 Miles	$33.33	$1.26		
Over 25 to 50 Miles	$33.81	$2.28		
Over 50 Miles	$33.78	$1.19		
9.6.3 DS3 UDIT			$351.39	Kennedy
Over 0 to 8 Miles	$210.28	$65.55		
Over 8 to 25 Miles	$213.45	$20.30		
Over 25 to 50 Miles	$196.74	$25.43		
Over 50 Miles	$207.61	$17.49		
9.6.4 OC-3 UDIT			$351.39	Kennedy
Over 0 to 8 Miles	$794.64	$252.46		
Over 8 to 25 Miles	$801.21	$67.90		
Over 25 to 50 Miles	$765.56	$92.37		
Over 50 Miles	$788.37	$57.09		
9.6.5 OC-12 UDIT			$351.39	Kennedy
Over 0 to 8 Miles	$2,247.68	$87.64		
Over 8 to 25 Miles	$2,247.68	$85.54		
Over 25 to 50 Miles	$2,247.68	$98.38		
Over 50 Miles	$2,247.68	$115.44		
9.6.6 Above OC-12 UDIT	ICB[4]	ICB[4]	ICB[4]	Kennedy
		Recurring	**Nonrecurring**	
9.6.7 Extended Unbundled Dedicated Interoffice Transport				Kennedy
DS1 E-UDIT		$59.13	$409.62	
DS3 E-UDIT		$335.36	$409.62	
OC-3 E-UDIT		$734.07	$409.62	
OC-12 E-UDIT		$1,377.93	$409.62	
Above OC-12 E-UDIT		ICB[4]	ICB[4]	

			Recurring	Nonrecurring	Witness
9.6.8	DS0 UDIT Low Side Channelization				Kennedy
	Low Side Channel Performance		$13.90		
	Low Side Channel Performance With Multiplexing		$8.87		
9.6.9	Multiplexing				Kennedy
	DS3 to DS1		$246.64	$267.45	
	DS1 to DS0		$229.32	$267.45	
	UDIT M1-3 Multiplexing			$2,558.27	
	UDIT MI-0 Multiplexing High Side			$272.49	
	UDIT M1-0 Multiplexing Low Side			$238.79	
9.6.10	UDIT Rearrangement				Kennedy
	DS0 Single Office			$175.49	
	DS0 Dual Office			$218.11	
	High Capacity Single Office			$237.35	
	High Capacity Dual Office			$264.86	
9.7	**Unbundled Dark Fiber (UDF)**				Kennedy
9.7.1	Single Strand Increments (Available May 31, 2001)	Under Development	Under Development	Under Development	
9.7.2	Initial Records Inquiry (IRI)				Kennedy
	Simple			$158.80	
	Complex			$202.48	
9.7.3	Field Verification and Quote Preparation (FVQP)			$1,478.86	Kennedy
9.7.4	Field Verification			Under Development	Kennedy
9.7.5	UDF-IOF				Kennedy
	Order Charge, Per Pair, Per Route, Per Order			$561.17	
	Each Additional, Per Pr, Same Route			$270.70	
	Termination-Wire Center- 2 Per Pair		$7.57		
	Fiber Transport, per Mile		$88.52		
	Cross Connect, 2 per Pair		$4.20		
9.7.6	UDF-Loop Charges				Kennedy
	Order Charge, Per Pair, Per Route, Per Order			$561.17	
	Each Additional, Per Pr, Same Route			$270.70	
	Termination at Wire Center, 2 per Pair		$7.84		
	Termination at Premise, 2 per Pair		$6.97		
	UDF Loop – Per Fiber Loop		$122.02		
	Fiber Cross-Connect, per Pair		$4.20	$21.46	
9.7.7	Extended Dark Fiber (E-UDF)				Kennedy
	Order Charge, Per Pair, Per Route, Per Order			$561.17	
	Each Additional, Per Pr, Same Route			$270.70	
	Termination at Wire Center, 2 per Pair		$7.84		
	Termination at Premise, 2 per Pair		$6.97		
	E-UDF Fiber – per Pair		$122.02		
	Fiber Cross-Connect, per Pair		$4.20	$21.46	

		Recurring	Nonrecurring	Witness
9.8 Shared Transport				
Per Minute of Use		$0.001573		Brohl
9.9 Unbundled Customer Controlled Rearrangement Element (UCCRE)				Brohl
9.9.1 DS1 Port		ICB[4]	ICB[4]	
9.9.2 DS3 Port		ICB[4]	ICB[4]	
9.9.3 Dial Up Access		ICB[4]	ICB[4]	
9.9.4 Attendant Access		ICB[4]	ICB[4]	
9.9.5 Virtual Ports		ICB[4]	ICB[4]	
9.10 Local Tandem Switching				Brohl
9.10.1 DS1 Local Message Trunk Port – Per Order		$59.28	$219.99	
9.10.2 DS1 Trunk Group – First Trunk – Per Order			$210.14	
9.10.3 DS1 Trunk Group–Each Additional Trunk-Per Order			$24.38	
9.10.4 Per Minute of Use		$0.002453		
9.11 Local Switching				Brohl
9.11.1 Analog Line Side Port, First Port		$1.33	$144.93	Brohl
9.11.2 Each Additional Port		$1.33	$95.34	Brohl
9.11.3 Local Usage, per Minute of Use		$0.002684		Brohl
9.11.4 Vertical Features				Brohl
10XXX Direct Dialed Blocking		$0.08		
Account Codes - per system		$7.56	$79.66	
Attendant Access Line - per station line		$0.08	$1.15	
Audible Message Waiting		$0.13	$1.01	
Authorization Codes - per system		$3.25	$238.25	
Auto Callback		$0.08		
Automatic Line		$0.07	$0.34	
Automatic Route Selection - Common Equip. per system		$2.20	$2,090.41	
Blocking of pay per call services		$0.10		
Bridging		$0.07		
Call Drop		$0.07	$0.34	
Call Exclusion - Automatic		$0.07	$1.01	
Call Exclusion - Manual		$0.07	$0.67	
Call Forward Don't Answer - All Calls		$0.13		
Call Forwarding Incoming Only		$0.08		
Call Forwarding Intra Group Only		$0.08		
Call Forwarding Variable Remote		$0.11		
Call Forwarding: Busy Line (Expanded)		$0.09		
Call Forwarding: Busy Line (External)		$0.09		
Call Forwarding: Busy Line (External) Don't Answer		$0.15		
Call Forwarding: Busy Line (Overflow)		$0.09		
Call Forwarding: Busy Line (Overflow) Don't Answer		$0.15		
Call Forwarding: Busy Line (Programmable)		$0.10		
Call Forwarding: Busy Line/Don't Answer Programmable Svc. Establishment			$15.59	
CF DON'T ANSWER/CF BUSY CUSTOMER PROGRAMMABLE - PER LINE			$1.01	
Call Forwarding: Busy Line/Don't Answer (Expanded)		$0.15	$37.75	

ARIZONA RATES

		Recurring	Nonrecurring	Witness
Call Forwarding: Don't Answer		$0.13	$37.75	
Call Forwarding: Don't Answer (Expanded)		$0.13		
Call Forwarding: Don't Answer (Programmable)		$0.13		
Call Forwarding: Variable		$0.10		
Call Forwarding: Variable - no call complete option		$0.10		
Call Hold		$0.08		
Call Hold/3-Way/Call Transfer		$0.33		
Call Park (Basic - Store & Retrieve)		$0.09		
Call Pickup		$0.08		
Call Transfer		$0.33		
Call Waiting Dial Originating		$0.08		
Call Waiting Indication - per timing state		$0.47	$1.01	
Call Waiting Originating		$0.09		
Call Waiting Terminating - All Calls		$0.12		
Call Waiting Terminating - Incoming Only		$0.12		
Call Waiting/ Cancel Call Waiting		$0.14		
CENTREX COMMON EQUIPMENT			$1,200.97	
Centrex Management System (CMS)		$0.60		
Centrex Plus DID numbers per number		$0.12		
Centrex Plus to Centrex Plus		$5.49		
Centrex Plus to IC Carrier		$5.49		
Centrex Plus to PBX/Key Blocked		$5.49		
Centrex Plus to PBX/Key Non-Blocked		$5.49		
CFBL - All Calls		$0.09		
CFBL - Incoming Only		$0.09	$37.75	
CFDA Incoming Only		$0.12	$37.75	
CLASS - Anonymous Call Rejection		$0.14		
CLASS - Call Waiting ID		$0.60		
CLASS - Calling Name & Number		$0.12		
CLASS - Calling Number Delivery		$5.49		
CLASS - Calling Number Delivery - Blocking		$5.49		
CLASS - Continuous Redial		$5.49	$1.26	
CLASS - Last Call Return		$5.49	$1.26	
CLASS - Priority Calling		$0.09	$1.20	
CLASS - Selective Call Forwarding		$0.09	$1.26	
CLASS - Selective Call Rejection		$1.67	$1.20	
Common Equipment per 1.544 Mbps facility (DS1)		$60.34		
Conference Calling - Meet Me		$14.60	$42.29	
Conference Calling - Preset		$11.15	$42.29	
Custom Ringing First Line (Short/Long/Short)		$0.09		
Custom Ringing First Line (Short/Short)		$0.09		
Custom Ringing First Line (Short/Short/Long)		$0.09		
Custom Ringing Second Line (Short/Long/Short)		$0.09		
Custom Ringing Second Line (Short/Short)		$0.09		
Custom Ringing Second Line (Short/Short/Long)		$0.09		
Custom Ringing Third Line (Short/Long/Short)		$0.08		
Custom Ringing Third Line (Short/Short)		$0.08		
Custom Ringing Third Line (Short/Short/Long)		$0.08		
Data Call Protection (DMS 100)		$0.07		
Dir Sta Sel/Busy Lamp Fld per arrangement		$1.83	$0.34	
Directed Call Pickup with Barge-in		$0.18	$20.08	
Directed Call Pickup without Barge-in		$0.10	$20.08	
Distinctive Ring/Distinctive Call Waiting		$0.09	$40.14	
Distinctive Ringing		$0.09		
EBS - Set Interface - per station line		$1.44		
Executive Busy Overide		$0.08		

ARIZONA RATES

		Recurring	Nonrecurring	Witness
Expensive Route Warning Tone- per system		$0.07	$71.60	
Facility Restriction Level - per system		$0.07	$44.05	
Feature Display		$0.07		
Group Intercom		$0.16	$0.45	
Hot Line - per line		$0.13	$1.01	
Hunting: Multiposition Circular Hunting		$0.27		
Hunting: Multiposition Hunt Queuing		$0.23	$38.42	
Hunting: Multiposition Series Hunting		$0.27		
Hunting: Multiposition with Announcement in Queue		$3.20	$38.42	
Hunting: Multiposition with Music in Queue		$1.14	$40.57	
Incoming Calls Barred		$0.08		
International Direct Dial Blocking		$0.09		
ISDN Short Hunt		$0.58	$1.69	
Line Side Answer Supervision		$0.09		
Loudspeaker Paging - per trunk group		$21.96	$175.77	
Make Busy Arrangements - per group		$0.36	$0.67	
Make Busy Arrangements - per line		$0.15	$0.67	
Message Center - per main station line		$0.07	$0.34	
Message Waiting Indication Audible/Visual		$0.13		
Message Waiting Visual		$0.13	$0.34	
Music On Hold - per system		$22.87	$23.03	
Network Speed Call		$0.07		
Night Service Arrangement		$0.08		
Outgoing Calls Barred		$0.08		
Outgoing Trunk Queuing		$0.13		
Privacy Release		$0.08	$0.47	
Query Time		$0.25	$0.34	
Speed Calling 1 Digit Controller		$0.08		
Speed Calling 1 Digit User		$0.08		
Speed Calling 1# List Individual		$0.08		
Speed Calling 2 Digit Controller		$0.08		
Speed Calling 2 Digit User		$0.08		
Speed Calling 2# List Individual		$0.08		
Speed Calling 30 Number		$0.08		
Speed Calling 8 Number		$0.08		
Station Camp-On Service - per main station		$8.51	$0.34	
Station Dial Conferencing (6 Way)		$1.48		
Station Message Detail Recording (SMDR)		$0.18		
Three Way Calling		$0.33		
Time and Date Display		$0.18		
Time of Day Control for ARS - per system		$0.07	$125.28	
Time of Day NCOS Update		$0.08	$0.54	
Time of Day Routing - per line		$0.13	$0.51	
Toll Restriction Service		$0.08		
Trunk Answer Any Station		$0.08		
Trunk Verification from Designated Station		$0.07	$0.39	
UCD in hunt group - per line		$8.23	$0.67	
UCD with Music After Delay		$5.45		
CMS - SYSTEM ESTABLISHMENT - INITIAL INSTALLATION			$967.37	
CMS - SYSTEM ESTABLISHMENT - SUBSEQUENT INSTALLATION			$483.69	
CMS - PACKET CONTROL CAPABILITY, PER SYSTEM			$483.69	
SMDR-P - SERVICE ESTABLISHMENT CHARGE, INITIAL INSTALLATION			$337.82	

		Recurring	Nonrecurring	Witness
	SMDR-P - ARCHIVED DATA		$176.52	
	CLASS- Call Trace (per Occurrence)		$2.40	
9.11.5	Subsequent Order Charge		$13.51	Brohl
9.11.6	Digital Line Side Port (Supporting BRI ISDN)			
	First Port and Each Additional	$11.19	$218.41	Brohl
9.11.6	DS0 Analog Trunk Port			Brohl
	First Port	$16.98	$122.58	
	Each Additional	$16.98	$28.45	
9.11.7	Digital Trunk Ports			Brohl
	DS1 Local Message Trunk Port	$59.28		
	Message Trunk Group – First Trunk		$208.23	
	Message Trunk Group – Each Additional		$50.62	
	DS1 PRI ISDN Trunk Port	$238.22	$645.72	
	DS1/DID Trunk Port	$3.52	$211.81	
9.12	**Customized Routing**			Brohl
9.12.1	Development of Custom Line Class Code – Directory Assistance or Operator Services Routing Only		ICB[4]	
9.12.2	Installation Charge, per Switch – Directory Assistance or Operator Service Routing Only		ICB[4]	
9.12.3	All Other Custom Routing	ICB[4]	ICB[4]	
9.13	**Common Channel Signaling/SS7**			Brohl
9.13.1	CCSAC STP Port	$260.09	$438.36	
9.13.2	CCSAC Options Activation Charge			
9.13.2.1	Basic Translations			
	First Activation, per Order		$114.83	
	Each Additional Activation, per Order		$9.53	
9.13.2.2	CCSAC Options Database Translations			
	First Activation per Order		$133.90	
	Each Additional Activation per Order		$57.20	
9.13.3	Signal Formulation, ISUP, Per Call Set-Up Request	$0.0020817		
9.13.4	Signal Transport, ISUP, Per Call Set-Up Request	$0.0013398		
9.13.5	Signal Transport, TCAP, per Data Request	$0.0002974		
9.13.6	Signal Switching, ISUP, Per Call Set-Up Request	$0.0009411		
9.13.7	Signal Switching, TCAP, Per Data Request	$0.0005910		
9.14	**Advanced Intelligent Network (AIN)**			Brohl
9.14.1	AIN Customized Services (ACS)		ICB[4]	
9.14.2	AIN Platform Access (APA)	ICB[4]	ICB[4]	
9.14.3	AIN Query Processing, per Query	ICB[4]		
9.15	**Line Information Database (LIDB)**			Brohl
9.15.1	LIDB Storage		No Charge	
9.15.2	Line Validation Administration System Access (LVAS)		ICB[4]	
9.15.2.1	LIDB Line Record Initial Load			
9.15.2.1.1	Up to 20,000 Line Records		$2,601.00	
9.15.2.1.2	Over 20,000 Line Records		ICB[4]	
9.15.2.2	Mechanized Service Account Update, per Addition or Update Processed		ICB[4]	

		Recurring	Nonrecurring	Witness
9.15.2.3	Individual Line Record Audit		ICB[4]	
9.15.2.4	Account Group Audit		ICB[4]	
9.15.2.5	Expedited Request Charge for Manual Updates		ICB[4]	
9.15.3	LIDB Query Service, per Query	$0.0009621	See 9.13.2.2	
9.15.4	Fraud Alert Notification, per Alert	No Charge		
9.16	**8XX Database Query Service**			Brohl
9.16.1	Basic Query, per Query	$.02000723	See 9.13.2.2	
9.16.2	POTS Translation	$.00000057		
9.16.3	Call Handling & Destination Feature	$.00000172		
9.17	**ICNAM, Per Query**	$0.000849	See 9.13.2.2	Brohl
9.18	**Construction Charges**		ICB[4]	Kennedy
9.19	**Miscellaneous Elements**			Kennedy
	Additional Engineering – Basic		$31.70	
	Additional Engineering – Overtime		$39.21	
	Additional Labor Installation – Overtime		$9.01	
	Additional Labor Installation – Premium		$18.02	
	Additional Labor Other – Basic		$27.63	
	Additional Labor Other – Overtime		$36.90	
	Additional Labor Other – Premium		$46.19	
	Testing and Maintenance – Basic		$29.35	
	Testing and Maintenance – Overtime		$39.21	
	Testing and Maintenance – Premium		$49.06	
	Maintenance of Service – Basic		$27.63	
	Maintenance of Service – Overtime		$36.90	
	Maintenance of Service – Premium		$46.19	
	Additional COOP Acceptance Testing – Basic		$29.35	
	Additional COOP Acceptance Testing – Overtime		$39.21	
	Additional COOP Acceptance Testing – Premium		$49.06	
	NonScheduled COOP Testing - Basic		$29.35	
	NonScheduled COOP Testing – Overtime		$39.21	
	NonScheduled COOP Testing – Premium		$49.06	
	NonScheduled Manual Testing – Basic		$29.35	
	NonScheduled Manual Testing – Overtime		$39.21	
	NonScheduled Manual Testing – Premium		$49.06	
	Cooperative Scheduled Testing – Loss		$0.08	
	Cooperative Scheduled Testing – C-Message Noise		$0.08	
	Cooperative Scheduled Testing – Balance		$0.33	
	Cooperative Scheduled Testing – Gain Slope		$0.08	
	Cooperative Scheduled Testing – C-Notched Noise		$0.08	
	Manual Scheduled Testing – Loss		$0.17	
	Manual Scheduled Testing – C-Message Noise		$0.17	
	Manual Scheduled Testing – Balance		$0.66	
	Manual Scheduled Testing – Gain Slope		$0.17	
	Manual Scheduled Testing – C-Notched Noise		$0.17	
	Additional Dispatch		$84.23	
	Date Change		$10.36	
	Design Change		$73.78	
	Expedite Charge		ICB[4]	
	Cancellation Charge		ICB[4]	
9.20	**Channel Regeneration**			Kennedy
	DS1 Regeneration	$9.45	$480.05	

		Recurring	Nonrecurring	Witness
DS3 Regeneration		$34.16	$1,807.55	
9.21 UNE Platform				
9.21.1 UNE-P Conversion				Brohl
9.21.1.1 UNE-P POTS, CENTREX, PAL, Analog PBX Mechanized				
First			$0.68	
Each Additional			$0.14	
9.21.1.2 UNE-P POTS, CENTREX, PAL, PBX Manual				
First			$16.21	
Each Additional			$2.70	
9.21.1.3 UNE-P PBX DID Trunk, Existing Service				
First			$20.61	
Each Additional			$3.12	
9.21.1.4 UNE-P ISDN BRI				
First			$15.09	
Each Additional			$3.12	
9.21.1.5 UNE-P ISDN PRI, DSS per DS1 Facility			$51.00	
9.21.1.6 UNE-P ISDN PRI, DSS Trunk				
First			$18.77	
Each Additional			$3.12	
9.21.2 UNE-P New Connection				Brohl
9.21.2.1 UNE-P POTS Mechanized				
First			$55.31	
Each Additional			$15.87	
9.21.2.2 UNE-P POTS Manual				
First			$82.11	
Each Additional			$18.44	
9.21.3 UNE-Combination Private Line				Kennedy
DS0/DS1/DS3/OCN/Integrated T-1 Existing Service			$40.87	
9.21.4 Enhanced Extended Loop (EEL)				Kennedy
9.21.4.1 EEL Link				Kennedy
DS0, First			$249.10	
DS0, Each Additional			$217.86	
DS1, First			$306.85	
DS1, Each Additional			$261.17	
DS3, First			$331.21	
DS3, Each Additional			$285.53	
	Recurring Fixed	**Recurring Per Mile**	**Nonrecurring**	
9.21.4.2 EEL Transport				Kennedy
DS0 Transport			$306.61	
DS0 Over 0 to 8 Miles	$20.93	$0.14		
DS0 Over 8 to 25 Miles	$20.95	$0.12		
DS0 Over 25 to 50 Miles	$20.99	$0.13		
DS0 Over 50 Miles	$20.94	$0.06		
DS1 Transport			$351.39	
DS1 Over 0 to 8 Miles	$33.05	$1.56		
DS1 Over 8 to 25 Miles	$33.33	$1.26		
DS1 Over 25 to 50 Miles	$33.81	$2.28		

		Recurring	Nonrecurring	Witness
DS1 Over 50 Miles	$33.78	$1.19		
DS3 Transport			$351.39	
DS3 Over 0 to 8 Miles	$210.28	$65.55		
DS3 Over 8 to 25 Miles	$213.45	$20.30		
DS3 Over 25 to 50 Miles	$196.74	$25.43		
DS3 Over 50 Miles	$207.61	$17.49		
9.21.4.3 Multiplexing				Kennedy
DS1 to DS0		$229.32	$267.45	
DS3 to DS1		$246.64	$267.45	
DS1 Transport Mux			$257.04	
DS3 Transport Mux			$257.04	
9.21.4.4 DS0 Channel Performance				Kennedy
DS0 Low Side Channelization		$13.90		
DS1/DS0 MUX, Low Side Channelization		$8.87	$238.79	
9.21.4.5 Concentration Capability		ICB[4]		Kennedy
10.0 Ancillary Services				Brotherson
10.1 Interim Number Portability	New York Method			
10.2 Local Number Portability				
10.2.1 LNP Queries	See FCC Tariff #1 Section 20.3.1 & 20.3.3			
10.2.2 LNP Managed Cuts				
Standard Managed Cuts per person per ½ hr			$27.31[1]	
Overtime Managed Cuts per person per ½ hr			$35.43[1]	
Premium Managed Cuts per person per ½ hr			$43.49[1]	
10.3 911/E911		No charge		
10.4 White Pages Directory Listings, Facility Based Providers				
10.4.1 Primary Listing		No charge		
10.4.2 Premium/Privacy Listings		Exchange Tariff Rate, less wholesale discount		
10.5 Directory Assistance, Facility Based Providers				
10.5.1 Local Directory Assistance, Per Call		$0.34[3]		
10.5.2 National Directory Assistance, per Call		$0.385[3]		
10.5.3 Call Branding, Set- Up and Recording			$10,500.00[3]	
10.5.4 Loading Brand /Per Switch			$175.00[3]	
10.5.5 Call Completion Link, per call		$0.085[3]		
10.6 Directory Assistance List Information				
10.6.1 Initial Database Load, per Listing		$0.025[3]		
10.6.2 Reload of Database, per Listing		$0.020[3]		
10.6.3 Daily Updates, per Listing		$0.025[3]		
10.6.4 One-time Set-Up Fee, per Hour			$82.22[3]	
10.6.5 Media Charges for File Delivery				
10.6.5.1 Electronic Transmission		$0.0010[3]		

		Recurring	Nonrecurring	Witness
10.6.5.2 Tapes (charges only apply if this is selected as the normal delivery medium for daily updates)		$30.00[3]		
10.6.5.3 Shipping Charges (for tape delivery)		ICB[4]		
10.7 Toll and Assistance Operator Services, Facility Based Providers,				
10.7.1 **Option A** – Per Message				
Operator Handled Calling Card		$0.36[3]		
Machine Handled Calling Card		$0.46[3]		
Station Call		$0.18[3]		
Person Call		$0.84[3]		
Connect to Directory Assistance		$2.05[3]		
Busy Line Verify, per Call		$0.55[3]		
Busy Line Interrupt		$0.72[3]		
Operator Assistance, per Call		$0.87[3]		
10.7.2 **Option B** – Per Operator Work Second and Computer Handled Calls				
Operator Handled, per Operator Work Second		$0.0181[3]		
Machine Handled, per Call		$0.13[3]		
10.7.3 Call Branding, Set-Up & Recording			$10,500[3]	
10.7.4 Loading Brand/Per Switch			$175[3]	
10.8 Access to Poles, Ducts, Conduits and Rights of Way				Kennedy
10.8.1 Pole Inquiry Fee, per Mile			$321.59	
10.8.2 Innerduct Inquiry Fee, per Mile			$386.56	
10.8.3 ROW Inquiry Fee			$142.86	
10.8.4 ROW Document Preparation			$142.86	
10.8.5 Field Verification Fee, per Pole			$35.72	
10.8.6 Field Verification Fee, per Manhole			$464.31	
10.8.7 Planner Verification, per Manhole			$15.93	
10.8.8 Manhole Verification Inspector, per Manhole			$285.73	
10.8.9 Manhole Make Ready Inspector, per Manhole			$428.59	
10.8.10 Pole Attachment Fee, per Foot, per Year		$4.34[5]		
10.8.11 Innerduct Occupancy Fee, per Foot, per Year		$0.37[5]		
10.8.12 Quitclaim Consideration, ROW				
12.0 Operational Support Systems				
12.1 Daily Usage Record File, per Record		$0.0007616		Brohl
12.2 Trouble Isolation Charge	Section 13, Qwest Arizona Exchange and Network Svcs Catalog			
17.0 Bona Fide Request Process			$2,400.07	Kennedy

NOTES:

* Unless otherwise indicated, all rates are proposed in Docket T-00000A-00-0194 on March 15, 2001.

[1] Rates not addressed in T-00000A-00-0194, March 15, 2001 filing.

[2] The charges for ICDF Collocation are the non-recurring and recurring charges associated with the unbundled network elements or ancillary services ordered by CLEC, the cost of extending the unbundled network elements or ancillary services to the demarcation point, which are recovered through the ITP charges and the Security charge

[3] Consistent with FCC orders, these rates are Market-Based.

		Recurring	Nonrecurring	Witness

[4] ICB, Individual Case Basis
[5] Rates per FCC Guidelines.

BEFORE THE ARIZONA CORPORATION COMMISSION

WILLIAM MUNDELL
CHAIRMAN
JIM IRVIN
COMMISSIONER
MARC SPITZER
COMMISSIONER

IN THE MATTER OF INVESTIGATION INTO QWEST CORPORATION'S COMPLIANCE WITH CERTAIN WHOLESALE PRICING REQUIREMENTS FOR UNBUNDLED NETWORK ELEMENTS AND RESALE DISCOUNTS	)	DOCKET NO. T-00000A-99-0194 AFFIDAVIT OF MAUREEN ARNOLD
STATE OF ARIZONA COUNTY OF MARICOPA	)	

Maureen Arnold, of lawful age, first duly sworn deposes and says:

1. My name is Maureen Arnold. I am Director of Policy and Law for Qwest Corporation in Phoenix, Arizona.

2. I hereby swear and affirm that my answers contained in the attached testimony to the questions therein propounded are true and correct to the best of my knowledge and belief.

Maureen Arnold

Maureen Arnold

SUBSCRIBED AND SWORN to before me this 15 day of March, 2001

Josie Maldonado

Notary Public

My Commission Expires:
9/18/2004

"OFFICIAL SEAL"
Josie Maldonado
Notary Public-Arizona
Maricopa County
My Commission Expires 9/18/2004

BEFORE THE ARIZONA CORPORATION COMMISSION

WILLIAM A. MUNDELL
CHAIRMAN
JIM IRVIN
COMMISSIONER
MARC SPITZER
COMMISSIONER

IN THE MATTER OF INVESTIGATION INTO QWEST CORPORATION'S COMPLIANCE WITH CERTAIN WHOLESALE PRICING REQUIREMENTS FOR UNBUNDLED NETWORK ELEMENTS AND RESALE DISCOUNTS	)	**DOCKET NO. T-00000A-00-0194 PHASE II**

DIRECT TESTIMONY OF

RENÉE ALBERSHEIM

QWEST CORPORATION

March 15, 2001

TESTIMONY INDEX

TESTIMONY INDEX I

EXECUTIVE SUMMARY 1

I. IDENTIFICATION OF WITNESS 2

II. OSS BACKGROUND 2

III. LEGAL OBLIGATIONS RELATING TO OSS AND LINE SHARING 9

IV. DEVELOPMENT OF BUSINESS REQUIREMENTS FOR LINE SHARING OSS MODIFICATIONS 12

V. DESCRIPTION OF THE OSS MODIFICATIONS NECESSARY TO SUPPORT LINE SHARING 16

VI. THE COST OF THE MODIFICATIONS TO QWEST'S OSS 24

VII. CONCLUSION 25

EXECUTIVE SUMMARY

1. Current Responsibilities:

   My responsibilities include identifying and managing regulatory issues involving Qwest's operational support systems (OSS) as a result of the Telecommunications Act of 1996, FCC orders, state commission decisions and other legal and regulatory matters.

2. Purpose of Testimony:

   The purpose of my testimony and exhibits is to discuss the costs incurred and the OSS modifications Qwest made to allow Co-Providers to perform all necessary functions associated with line sharing through Qwest's OSS.

3. Summary of Testimony:

   In my testimony, I will provide: 1) background information regarding Qwest's OSS and electronic interfaces; 2) a description of the regulatory requirements relating to line sharing and OSS; 3) a description of the process used by Qwest and participating Co-Providers to develop line sharing business requirements; 4) a description of the actual OSS modifications needed to support line sharing; and 5) an explanation of the costs Qwest has incurred to make those modifications.

I. IDENTIFICATION OF WITNESS

Q. PLEASE STATE YOUR NAME, OCCUPATION AND BUSINESS ADDRESS.

A. My name is Renée Albersheim. I am employed by Qwest Corporation (Qwest) as a Regulatory Manager in the Information Technologies Wholesale Organization. My business address is 1999 Broadway, 10th Floor, Denver, Colorado 80202.

Q. PLEASE DESCRIBE YOUR WORK EXPERIENCE AND EDUCATION.

A. I received a Bachelor of Arts Degree from the University of Colorado in 1983 and a Master of Business Administration in Information Systems from the University of Colorado Graduate School of Business in 1985. Prior to becoming a Qwest employee, I was a consultant on application development projects for 15 years in a variety of areas: programming and systems development, systems architecture, project management, information center management and software training. During that time I worked on a number of Qwest's operational support systems (OSS). I am currently attending the University of Denver College of Law and will receive my Juris Doctor in May 2001. Since joining Qwest, I have worked in the Wholesale Organization in the Information Technologies division.

II. OSS BACKGROUND

Q. WHAT ARE OSS?

A. Qwest uses a variety of computer systems to support the operations of its telecommunications business. To understand and evaluate the OSS issues relating to line sharing, it is helpful to review the functions that OSS perform. An OSS is a

computer system that does not directly provide telecommunications service to customers, but supports employees performing "operational" duties, such as issuing service orders, testing trunks and maintaining switching systems. OSS are specialized; each performs different functions. Certain OSS allow for the ordering of products and services for customers, and other OSS record and process trouble tickets. There are many other OSS that provide a wide variety of other functions. Only the OSS specific to line sharing are discussed in this testimony.

Q. WHAT PURPOSES DO OSS SERVE IN CONNECTION WITH ORDERS FOR LINE SHARING?

A. In order to obtain line sharing, Co-Providers need access to incumbent local exchange carriers' (ILECs') OSS. OSS provide Co-Providers with pre-order information about loops so a Co-Provider may determine whether a loop qualifies for the Co-Provider's flavor of xDSL. In addition, OSS are used to process orders that Co-Providers submit for line sharing. Co-Providers submit these orders in the form of local service requests (LSRs) that enter Qwest's OSS, are converted into service orders and are processed through downstream OSS. The downstream OSS use the information on the service orders to perform the provisioning, billing and repair functions needed to support line sharing.

Q. WHAT OSS ELECTRONIC INTERFACES DOES QWEST PROVIDE TO CO-PROVIDERS?

A. Qwest offers two real-time electronic interfaces for the exchange of information relating to pre-ordering, ordering and provisioning of resale services and unbundled

network elements (UNEs). Qwest developed and provides both a human-to-computer electronic interface, IMA-GUI (Interconnect Mediated Access – Graphical User Interface) and a computer-to-computer electronic interface, IMA-EDI (Electronic Data Interchange), for pre-ordering, ordering and provisioning of resale and line-side UNEs.

For repair capabilities, Qwest developed and provides two types of real-time electronic interfaces to Co-Providers. IMA-GUI[1] provides repair functionality through a human-to-computer electronic interface, while EB/TA (Electronic Bonding/Trouble Administration) provides those capabilities through a computer-to-computer electronic interface. Each of these interfaces allows Co-Providers to perform pre-order, order and repair transactions electronically and allows Qwest to electronically send confirmation information back to the Co-Provider. For descriptions of these electronic interfaces, please see Exhibit RA-1 – System Descriptions of IMA-EDI, IMA-GUI and EB/TA.

Q. WHAT IS MEANT BY "OSS ELECTRONIC INTERFACES"?

A. Electronic interfaces facilitate the exchange of information between Co-Providers' and Qwest's OSS. An interface allows a Co-Provider to perform pre-order and order transactions electronically. The interface also permits the electronic exchange of other information between Co-Providers and Qwest, including information about products and services, installation timelines, the characteristics of facilities and the

[1] During 2001, the IMA GUI interface for repair will be replaced with the Co-Provider requested CEMR GUI interface.

completion status of orders. There are two primary methods for exchanging these types of information - batch transfers and real-time transactions. An electronic interface that uses a batch transfer method typically processes large amounts of information and transmits the information from one computer system to another. This type of data processing accumulates information, groups related transactions together and transmits the information on a scheduled basis, generally once a day. Batch transfers enable a large amount of information to be transmitted efficiently between computers. For example, although switches can record call detail messages as they are made, Qwest's Customer Record Information System (CRIS) Billing System processes the call details on a scheduled daily basis.

An electronic interface that uses real-time transactions processes data and/or transactions in an interactive mode, similar to a conversation. When a transaction or query is sent from one computer system to another, a response is sent back without waiting for a scheduled transfer time. For example, if a Co-Provider's computer system submits a request for information about the availability and characteristics of an unbundled loop, Qwest's OSS receive the request through the interface, conduct a query of its databases and transmit the responsive information back to the Co-Provider's computer system. Unlike batch transmissions, real-time transactions are executed in direct response to a request. These transactions are real-time in the sense that the time needed to handle a specific request is the only time that elapses between receipt of a request and sending a response. Qwest's computer system answers the Co-Provider's computer as soon as it has the

information the Co-Provider requested. Generally, an electronic interface that uses a real-time electronic transfer method is necessary whenever the information requested is needed to influence the next step of an ongoing process.

Q. HOW DO CO-PROVIDERS ORDER LINE SHARING FROM QWEST?

A. Co-Providers order line sharing from Qwest by submitting a local service request (LSR) for line sharing to Qwest.

Q. WHAT IS AN LSR?

A. An LSR is a communication format developed through the Ordering and Billing Forum (OBF)[2] to standardize the line side UNE ordering process between Co-Providers and ILECs.

Q. PLEASE DESCRIBE THE TYPES OF INFORMATION THAT QWEST AND CO-PROVIDERS ARE LIKELY TO EXCHANGE THROUGH LSRS TO FACILITATE LINE SHARING.

A. Co-Providers must:

- show that the order is for line sharing;
- identify the specific customer for whom line sharing is sought; and
- supply information about the appropriate meet point where the Co-Provider's equipment will connect with Qwest's equipment.

[2] The Order Billing Forum (OBF) is a national telecommunications committee with members from various telecommunications companies. The OBF sets the standards for exchange of order and billing information between companies.

Q. PLEASE DESCRIBE HOW LSRS ARE PROCESSED.

A. When a Co-Provider submits an LSR for line sharing, Qwest must process the information contained in the LSR through all OSS necessary to deliver the service to the end-user. Qwest's downstream OSS are unable to recognize data in LSR format. The data must be converted to a recognizable format. The service order generator converts LSR information to the service order format required to process the request through Qwest's OSS. The ordering process is comprised of three major functions depicted in the following picture and explained below.

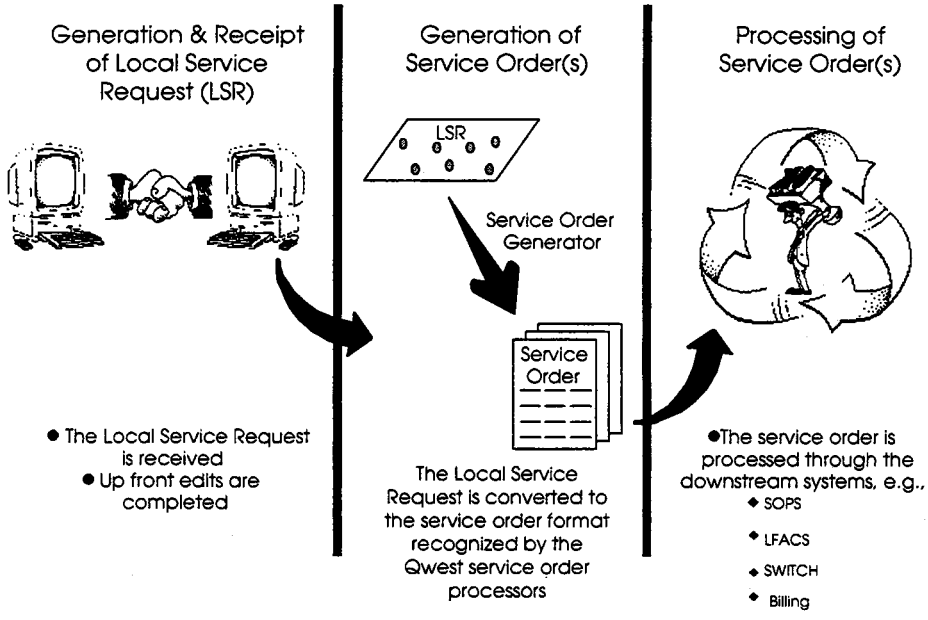

1) Local Service Request Generation and Receipt. A Co-Provider generates an LSR and transmits it to Qwest through a Qwest-provided electronic interface or via facsimile.

2) Service Order Generation. Qwest's service order processors (SOPs) understand information contained in service orders. Therefore, Qwest's

Service Order Generator converts LSR information into service orders. Service orders contain product codes -Universal Service Order Codes (USOCS) and Field Identifiers (FIDs). FIDs are the additional information required to provide the specific product.

3) Service Order Processing. Service orders are processed by many downstream OSS resulting in the provisioning of service, with the equipment inventoried and customer accounts updated.

Q. ARE QWEST'S OSS CURRENTLY EQUIPPED TO HANDLE LSRS FOR LINE SHARING?

A. Yes. Qwest's OSS are equipped to support line sharing. In order to support line sharing in a reasonable and timely manner, Qwest quickly developed and implemented an interim solution for ordering line sharing. The interim line sharing solution was developed and implemented to enable Qwest to support line sharing prior to the implementation of a long-term, permanent solution. The costs associated with the implementation of the interim line sharing solution that Qwest incurred are not included in this testimony, as Qwest does not intend to seek recovery of these costs from the Co-Providers.

As I explain in detail later in this testimony, in order to implement the long-term solution, Qwest had to make substantial modifications to its OSS to handle orders for line sharing. The long-term solution is identified in Exhibit RA-2 - Gap Matrix and is described in further detail in the Section V of this testimony. The line sharing OSS modifications are not only for processing LSRs, but also for the provisioning

1 (assignment and inventory), repair and billing functionality needed to support all
2 aspects of line sharing. The costs for these modifications are included in this
3 testimony and are explained in detail in the Section VI of this testimony.

4 **III. LEGAL OBLIGATIONS RELATING TO OSS AND LINE SHARING**

5 **Q. ARE THERE RELEVANT COMMISSION ORDERS THAT RECOGNIZE THE**
6 **RELATIONSHIP BETWEEN OSS AND LINE SHARING?**

7 A. Yes. In the fall of 1999, the Minnesota Public Utilities Commission (MNPUC)[3] and
8 the Federal Communications Commission (FCC)[4] issued orders that recognize this
9 relationship and require actions by ILECs and Co-Providers. The OSS modifications
10 that Qwest made for line sharing were driven by these orders as well as by the Co-
11 Providers' needs for loop information and line sharing ordering functionality.

12 **Q. WHAT ARE THE REQUIREMENTS OF THE FCC REGARDING OSS AND**
13 **ELECTRONIC INTERFACES?**

14 A. In order to fully understand the implications of the FCC's line sharing requirements,
15 one must first understand what the FCC ordered regarding OSS and electronic
16 interfaces in general. The Telecommunications Act of 1996 required ILECs, such as
17 Qwest, to unbundle network elements and provide Co-Providers access to these

---

[3] *In the Matter of a Commission Initiated Investigation into the Practices of Incumbent Local Exchange Companies Regarding Shared Line Access, Docket No. P-999/CI-99-678, at 6 (Issued October 8, 1999), (Minnesota Line Sharing Order).*

[4] The FCC most recently discussed the ILECs' authorization to recover costs in the Line Sharing Order. See *In the Matters of Deployment of Wireline Services Offering Advanced Telecommunications Capability, CC Docket No. 98-147, and Implementation of the Local Competition Provisions in the Telecommunications Act of 1996,* CC Docket No. 96-98, ¶ 144 (rel. Dec. 9, 1999), (*Line Sharing Order*).

UNEs.[5] In its First Report and Order,[6] the FCC identified OSS as a UNE and required ILECs to unbundle their OSS to support pre-ordering, ordering, provisioning, maintenance and repair and billing for resold products and UNEs. In order to meet the FCC's requirements, Qwest had to change its OSS to:

- support a multi-carrier environment,
- support the introduction of multiple new products and services resulting from unbundling elements and
- make existing retail products and services available for resale.

The Telecommunications Act[7] and the FCC[8] recognized that providing Co-Providers access to OSS would come at a price, and they authorized ILECs to recover the reasonable cost of making their OSS available to Co-Providers.

Q. WHAT DID THE FCC CONCLUDE REGARDING LINE SHARING AND OSS?

A. In its first Line Sharing Order, the FCC recognized that the ILECs must modify their OSS to support line sharing and that the ILECs will incur costs in doing so.[9] The FCC found that the ILECs should recover "reasonable incremental costs of OSS

---

[5] *Telecommunications Act of 1996, Pub. L. No. 104-104, 110 Stat. 56, codified at 47 U.S.C. §§ 151 et seq.* § 252(d), (*Telecommunications Act*).

[6] See *In the Matter of Implementation of the Local Competition Provisions in the Telecommunications Act of 1996*, CC Docket No. 96-98, and *In the Matter of Interconnection between Local Exchange Carriers and Commercial Mobile Radio Service Providers*, CC Docket No. 95-185, ¶ 516 (rel. Aug. 8, 1996), (*FCC First Report and Order*).

[7] *Telecommunications Act § 252(d).*

[8] *Line Sharing Order ¶ 144.*

[9] *Line Sharing Order ¶ 142.*

1 modification that are caused by the obligation to provide line sharing as an
2 unbundled network element."[10]

3 **Q. WHAT DID THE MNPUC CONCLUDE REGARDING LINE SHARING AND OSS?**

4 A. The MNPUC ordered Qwest and any interested Co-Providers to conduct an
5 operational impact review to develop the terms and conditions under which Qwest
6 would provide line sharing to Co-Providers. In parallel, the MNPUC also ordered
7 Qwest and any interested Co-Providers to "participate in good faith in a technical
8 trial . . . for the purpose of confirming which (if any) of the interested data CLECs'
9 equipment does not interfere with Qwest's voice grade network."[11]

10 By focusing on the "terms and conditions" relating to line sharing, the MNPUC's
11 order clearly implicates OSS since OSS are necessary for line sharing. Accordingly,
12 in compliance with the MNPUC's order, Qwest and the CLECs worked closely to
13 identify modifications necessary for Qwest's OSS to properly support line sharing.

---

[10] *Line Sharing Order ¶ 144.*

[11] *Minnesota Line Sharing Order at 6.*

IV. DEVELOPMENT OF BUSINESS REQUIREMENTS FOR LINE SHARING OSS MODIFICATIONS

Q. PLEASE DESCRIBE THE PROCESS USED BY QWEST AND THE CO-PROVIDERS TO MEET THE LINE SHARING OBLIGATIONS SET FORTH BY THE MNPUC AND THE FCC.

A. Qwest was the first ILEC to implement line sharing. Qwest started accepting orders for line sharing on January 10, 2000. Line sharing is a very complex UNE; unlike other UNEs that are provided to and used by a single LEC, the line sharing UNE is shared by two LECs – an ILEC and a Co-Provider. As a result, it was essential that Qwest and the Co-Providers work closely to develop line sharing business requirements, especially in the area of OSS. The development of line sharing business requirements was accomplished through weekly face-to-face meetings attended by representatives of Qwest and interested Co-Providers (the "joint team"). At these meetings, the joint team developed high-level processes for line sharing and identified issues to be resolved in relation to those processes. The joint team considered the five general categories of OSS issues: 1) pre-ordering (e.g., pre-qualification of loops for ADSL compatibility); 2) ordering; 3) provisioning; 4) billing; and 5) repair and maintenance. When necessary, the joint team delegated specific issues to sub-groups for resolution.

1 **Q. IS THE OPERATIONAL IMPACT REVIEW CONDUCTED BY QWEST AND CO-**
2 **PROVIDERS RELEVANT TO PROVIDING LINE SHARING IN ARIZONA?**
3 A. Qwest and the Co-Providers developed the business and technical OSS
4 requirements for line sharing following the operational impact review in Minnesota.
5 Qwest's OSS are deployed throughout its entire 14-state region. Therefore, the
6 business and technical OSS requirements for line sharing developed as a result of
7 the operational impact review in Minnesota drove the deployment of line sharing
8 throughout Qwest's entire 14-state region.

9 **Q. SPECIFICALLY, WHAT TASKS DID THE JOINT TEAM PERFORM?**
10 A. The first step was to identify the line sharing business requirements. The joint team
11 spent a great deal of time identifying the data needs of the Co-Providers. Qwest and
12 the participating Co-Providers discussed the Co-Providers' needs for pre-ordering,
13 ordering, provisioning, repairing and billing functionality.

14 The second step for the joint team was to determine how the line sharing business
15 requirements impacted Qwest's OSS. As shown in the attached Exhibit RA-2 - Gap
16 Matrix, the joint team identified eight broad areas for modification of Qwest's OSS.
17 In the Gap Matrix, these eight areas are referred to as "gaps." The joint team
18 developed a long-term systems solution and deployment timeframes (when known)
19 for each of those gaps. In those cases where the Co-Providers desired a more
20 immediate solution, the joint team developed interim solutions and timeframes.

1 **Q. WHAT ADDITIONAL ACTIVITIES DID THE JOINT TEAM UNDERTAKE?**

2 A. In addition to identifying the OSS impacts, the joint team defined the provisioning
3 processes, the repair processes and the network architecture for line sharing. In
4 general, the joint team determined the Co-Providers would need to provide
5 additional line sharing information to designate the end-user customer and the meet
6 points where the Co-Providers' equipment and Qwest's equipment will connect. The
7 joint team also developed a joint repair process.

8 **Q. WAS THE JOINT TEAM ABLE TO IDENTIFY THE OSS IMPACTS?**

9 A. Yes. The joint team agreed that Qwest's systems could be modified to support line
10 sharing. In addition, the joint team agreed that initial deployment would be based on
11 a combination of automated and manual work steps, with full mechanization
12 occurring with the delivery of the long-term solution. The joint team developed a
13 decision point list (DPL) that was also a part of the stipulation in Minnesota. The
14 DPL was used to display joint positions when the parties reached full agreement; it
15 was also used to display divergent positions in instances when there was either no
16 agreement or partial agreement. The DPL shows full agreement among all the
17 members of the joint team on all of the OSS issues.

18 **Q. AFTER REACHING AGREEMENT WITH THE CO-PROVIDERS ON THE ISSUES**
19 **RELATING TO OSS, WHAT STEPS DID QWEST TAKE TO BEGIN**
20 **IMPLEMENTING THE OSS MODIFICATIONS FOR LINE SHARING?**

21 A. With the business requirements and system impacts identified by the joint team,
22 Qwest was able to prepare a statement of work describing, in detail, the OSS

1 modifications necessary for line sharing. That statement of work is attached to my
2 testimony as confidential Exhibit RA-3 - Statement of Work for Shared Loop. Qwest
3 provided the statement of work to Telcordia for preparation of an implementation
4 plan and a cost quote. The joint team's business requirements and system impacts
5 also allowed Qwest to identify and begin planning the OSS changes that were
6 implemented in-house.

7 **Q. HAVE QWEST AND THE CO-PROVIDERS CONTINUED TO WORK TOGETHER**
8 **TO DEPLOY LINE SHARING?**

9 A. Yes. After the initial agreement was reached in Minnesota, Qwest and the Co-
10 Providers began negotiating an agreement to address line sharing in the other 13
11 states throughout Qwest's region, including Arizona. That 13-state agreement,
12 signed on April 24, 2000, is attached as Exhibit RA-4 - Interim Line Sharing
13 Agreement. On December 19, 2000, Qwest entered into a Permanent Line Sharing
14 Agreement with four Co-Providers.[12]

[12] The Co-Providers participating in the initial permanent line sharing agreement are Contact Communications, MULTIBAND Communications Inc., New Edge Networks and NorthPoint Communications Inc.

V. DESCRIPTION OF THE OSS MODIFICATIONS NECESSARY TO SUPPORT LINE SHARING

Q. PLEASE DESCRIBE THE ELECTRONIC INTERFACES AND OSS THAT QWEST USES TO PROVIDE CLECS ACCESS TO PRE-ORDERING, ORDERING AND PROVISIONING FUNCTIONS.

A. In pre-ordering, ordering and provisioning, Qwest exchanges information with Co-Providers about wholesale products and services. As described earlier, Qwest provides Co-Providers access to two electronic interfaces, IMA-GUI and IMA-EDI, for the pre-ordering, ordering and provisioning of resale and UNEs. Co-Providers' customer service representatives can perform real-time inquiries and selection functions and they can electronically transmit LSRs to Qwest for processing through IMA-GUI and/or IMA-EDI. For more information on the pre-order and order transactions that are supported by Qwest's electronic interfaces, please refer to the Exhibit RA-1 - System Descriptions of IMA-EDI, IMA-GUI and EB/TA.

After an LSR is submitted to Qwest via IMA-GUI, IMA-EDI or facsimile, it is processed through Qwest's OSS. The SOPs and other downstream OSS, are critical components for performing pre-ordering, ordering and provisioning functions. In each region, the SOPs are the common points through which orders pass for most product types. For Arizona, which is in the central region, the SOP is known as Service Order Processor and Distribution (SOPAD). SOPAD receives service orders from several sources and, in turn, communicates with the Service Order Activation and Control System (SOAC) that manages the service order process with

respect to the specialized systems that design and activate network-based services, assign facilities, maintain central office inventory and manage customer account information. In doing so, SOAC directs each service order through all steps necessary to complete the order and provision the service.

See Exhibit RA-5 - System Descriptions, for a brief description of the above-mentioned Qwest systems.

Q. PLEASE DESCRIBE THE OSS MODIFICATIONS REQUIRED FOR CO-PROVIDERS TO PERFORM LINE SHARING PRE-ORDERING, ORDERING AND PROVISIONING FUNCTIONS.

A. The Co-Providers agreed the pre-order loop information provided by the IMA GUI/EDI 4.2 release was sufficient to begin line sharing. Consequently, no pre-order modifications were made for the interim solution. Beginning mid year 2000, Qwest provided Co-Providers with electronic batch files containing loop information on a per wire center basis. Those batch files contain a list of all active telephone numbers within a particular wire center as well as additional loop information for each telephone number listed. Co-Providers are able to access these batch loop files through one of Qwest's Co-Provider-accessible web site. The batch files do not provide Co-Providers with a definitive answer as to whether a certain loop qualifies for xDSL. Instead, the batch files provide loop information from which Co-Providers may make their own determination as to whether a loop is capable of supporting their type of xDSL service.

In December 2000, Qwest released version 6.0 of IMA. Version 6.0 included the Raw Loop Data query tool which enables the Co-Providers to determine loop qualification in real-time. See Exhibit RA-6 – Raw Loop Data Tool Product Description for additional information.

To support line sharing, the ordering and provisioning processes were modified to reflect the fact that two local service providers (the ILEC and the Co-Provider) will now serve one end-user customer. The presence of two providers for one end-user had a substantial impact on the OSS ordering and provisioning processes. The OSS that support these processes were modified to allow Co-Providers to provide the additional pieces of data (new FIDs) used to designate:

- the Co-Provider's identity;
- that this is a request for line sharing;
- the line that will be shared between the requesting Co-Provider and Qwest;
- the meet points (the splitter and port location) and
- the power density mask that the Co-Provider pre-specifies on the LSR.

In addition, the ordering and provisioning OSS must recognize the line sharing information and, based on that information, direct appropriate data and behaviors to other downstream OSS. Many of these OSS must now store Co-Provider-specific records that correlate with Qwest's voice customer records. For example, correlation of Co-Providers' records and Qwest's voice customer records is necessary to carry out functions relating to billing and repair. The inventory and

assignment OSS must also recognize the line sharing data, be able to handle additional inventory meet points from the Co-Provider and direct the inventory information to the appropriate systems.

Please see the attached Exhibit RA-6 - Descriptions of Modifications, for a description of the modifications needed to support line sharing and for diagrams of the systems flows.

Q. PLEASE DESCRIBE THE ELECTRONIC INTERFACES AND OSS THAT QWEST USES TO PROVIDE CO-PROVIDERS ACCESS TO REPAIR FUNCTIONS.

A. To communicate with Qwest regarding repair issues, Co-Providers can use two of Qwest's electronic interfaces for maintenance and repair. As stated earlier, Qwest provides Co-Providers access to two electronic interfaces for the repair of resold services and UNEs: IMA-GUI and EB/TA.

Co-Providers' customer service representatives can use the electronic interfaces to: 1) create trouble reports; 2) modify trouble reports; 3) receive proactive status notifications; 4) cancel trouble reports; 5) close trouble reports; 6) obtain trouble history; and 7) submit MLT (mechanized loop tests).

After a trouble report is submitted to Qwest, it must be converted into a trouble ticket. Qwest's OSS understand information contained in trouble tickets. Therefore, Qwest electronically converts trouble report information into trouble tickets.

1 See Exhibit RA-5 - System Descriptions, for a brief description of the above-
2 mentioned OSS.

3 **Q. PLEASE DESCRIBE THE OSS MODIFICATIONS REQUIRED FOR CO-**
4 **PROVIDERS TO PERFORM LINE SHARING REPAIR FUNCTIONS.**

5 A. As with the changes needed for ordering and provisioning, the modifications that
6 Qwest implemented for its repair OSS were driven primarily by the fact that with line
7 sharing, two local service providers (an ILEC and a Co-Provider) will serve one end-
8 user customer. As a result, there are two line records, one for the voice portion of
9 the line provided by Qwest and one for the data portion of the line provided by a Co-
10 Provider. For repair, Qwest remains responsible for voice service and physical line
11 problems between the network interface device (NID) at the end-user customer's
12 premises and the point of demarcation in the central office. The Co-Providers are
13 responsible for data service problems. End-user customers experiencing line
14 trouble are directed to call a number that accesses a voice response unit (VRU).
15 The VRU performs preliminary trouble shooting functions. The VRU that precedes
16 the repair OSS must be able to walk the end-user customer through a series of
17 questions and answers to determine if the repair problem can be isolated to either
18 the voice or the data service. If the VRU determines that it is a data service
19 problem, there is a soft referral[13] to the Co-Provider.

[13] e.g. "Please hold while we connect you with your data service provider."

1 Please see the attached Exhibit RA-6 - Descriptions of Modifications, for a
2 description of the modifications needed to support line sharing and for diagrams of
3 the systems flows.

4 **Q. PLEASE DESCRIBE THE ELECTRONIC INTERFACES AND OSS THAT QWEST**
5 **USES TO PROVIDE CO-PROVIDERS ACCESS TO BILLING FUNCTIONS.**

6 A. Qwest provides monthly wholesale bills to Co-Providers as a means of collecting
7 wholesale charges. A Co-Provider ordering line sharing receives a wholesale
8 summary bill from CRIS. CRIS produces the monthly bill and provides it to the Co-
9 Provider electronically. The bill information provided to the Co-Provider includes
10 charges and account balances. Charges are broken down into categories, such as
11 recurring charges, usage fees and taxes. As with retail bills, billing for recurring
12 charges start and stop effective with the completion date of the related service
13 orders.

14 See Exhibit RA-5 - System Descriptions, for a brief description of the above-
15 mentioned OSS.

16 **Q. PLEASE DESCRIBE THE OSS MODIFICATIONS REQUIRED FOR CO-**
17 **PROVIDERS TO PERFORM LINE SHARING BILLING FUNCTIONS.**

18 A. The account structure in CRIS was set up to allow for one customer and one service
19 provider. However, line sharing requires CRIS to bill two customers: 1) the end-user
20 customer for the voice portion of the line and 2) the Co-Provider as the customer for
21 the line sharing product. Therefore, two customer records must be modified each

time a line sharing order is processed. In addition, the two customer records must be correlated to ensure that subsequent order activity is performed accurately. The need to bill two customers for a single loop gave rise to the need for significant modifications to CRIS.

Please see the attached Exhibit RA-7 - Descriptions of Modifications, for a description of the modifications needed to support line sharing and for diagrams of the systems flows.

Q. ARE THERE DOCUMENTS THAT PROVIDE DETAILED DESCRIPTIONS OF THE LINE SHARING-SPECIFIC MODIFICATIONS TO QWEST'S OSS?

A. Yes. After Qwest and the Co-Providers developed the line sharing business requirements, Qwest converted the business requirements into technical requirements that systems analysts could use to develop high-level designs and associated time and cost estimates for implementation. Because the descriptions of the modifications and the descriptions of the work needed to complete the modifications are very detailed, I will not attempt to provide that information in the body of this testimony. However, two exhibits to my testimony, Exhibit RA-7 - Descriptions of Modifications and confidential Exhibit RA-3 - Statement of Work for Shared Loop, describe the modifications and the steps needed to implement the OSS modifications. Please refer to those exhibits for more information.

Q. WHY DID QWEST SUBMIT A STATEMENT OF WORK TO TELCORDIA?

A. Telcordia owns the majority of the systems impacted by the line sharing business requirements developed by the joint team. Accordingly, Telcordia is the only party authorized to carry out the modifications needed to support line sharing for those OSS. The Telcordia-owned systems are:

- LFACS
- SOAC
- SWITCH
- PAWS
- NSDB
- WFA/C
- WFA/DI
- WFA/DO
- LEIS/LEADS

Q. DO THE CO-PROVIDERS BENEFIT FROM THE OSS LINE SHARING ENHANCEMENTS YOU HAVE DESCRIBED?

A. Yes. The modifications described above and in Exhibit RA-7 - Descriptions of Modifications, are essential to the Co-Providers' ability to use Qwest's OSS for performing all functions necessary for line sharing. The foundation for these modifications was established by the joint team.

1 **Q. DOES QWEST'S RETAIL BUSINESS BENEFIT FROM THE LINE SHARING**
2 **ENHANCEMANTS TO OSS YOU HAVE DESCRIBED?**

3 A. No. Qwest does not line share with itself. As the FCC stated, line sharing is "[t]he
4 provision of xDSL service by a competitive LEC and voiceband service by an
5 incumbent LEC on the same loop."[14] Therefore, line sharing only occurs when an
6 ILEC and a Co-Provider deliver voice and data to the same customer on the same
7 loop. The line sharing OSS modifications were to allow multiple providers on a
8 single loop. Qwest did not need these modifications for its xDSL product. The OSS
9 changes were made solely for the benefit of Co-Providers to allow their xDSL
10 product over the same line on which Qwest provides voice service.

11 **VI. THE COST OF THE MODIFICATIONS TO QWEST'S OSS**

12 **Q. WHAT LINE SHARING OSS MODIFICATION COSTS DOES QWEST SEEK TO**
13 **RECOVER IN THIS PROCEEDING?**

14 A. Qwest is requesting cost recovery for those OSS modifications that are solely
15 attributable to line sharing and that, but for line sharing, would not be necessary. The
16 total line sharing OSS modifications cost Qwest $12,826,720. These costs include
17 $870,720 for modifications to Qwest's internal OSS and $56,000 for project
18 management. The total cost also includes Telcordia's price for delivery of the long-
19 term solution to support line sharing which is $11.9 million.[15] Telcordia developed its

---

[14] *Line Sharing Order ¶ 4.*

[15] The total cost for the Telcordia solution is $14 million. According to Telcordia, 15% of the Telcordia modifications are applicable to other UNEs, but 85% are solely attributable to the line sharing requirements agreed to between Qwest and the Co-Providers. The 85% share represents Telcordia's

price based on the statement of work that is attached as confidential Exhibit RA-3 - Statement of Work for Shared Loop.

Q. WITH RESPECT TO THE $870,720 QWEST INCURRED FOR IN-HOUSE OSS MODIFICATIONS, PLEASE DESCRIBE THE PROCESS QWEST USED TO DETERMINE THE IMPACTS TO ITS OSS AND PLEASE DESCRIBE THE PROCESS USED TO DEVELOP COST ESTIMATES.

A. Qwest uses a standard system development lifecycle process. The first step is to determine business requirements. Business requirements are then converted into technical requirements, which are more detailed and more system-oriented. The internal technical staffs use the technical requirements to drive high-level systems designs. Using their previous experience with other projects of substantially the same magnitude, the technical staffs can take the high-level systems designs and develop a high-level estimate of the costs to develop and deploy the modifications necessary to support the original business requirements.

VII. CONCLUSION

Q. PLEASE SUMMARIZE YOUR TESTIMONY.

A. Qwest uses a variety of OSS to support the operations of its telecommunications business. OSS are specialized; each performs different functions. Certain OSS allow for the ordering of products and services for customers, and other OSS record and process trouble tickets. There are many other OSS that provide a wide variety of

---

estimate of the percent of their total estimated costs that can be attributed solely to line sharing. - 85%

other functions. Co-Providers need access to ILECs' OSS in order to perform necessary functions associated with providing telecommunications services to their customers.

Access to Qwest's OSS via the electronic interfaces is critical for Co-Providers to perform the necessary functions associated with line sharing. OSS provide Co-Providers with pre-order information about loops so the Co-Provider can determine whether a loop qualifies for the Co-Provider's flavor of xDSL. In addition, OSS are used to process orders that Co-Providers submit for line sharing.

Qwest had to make significant changes to its OSS in order to enable Co-Providers to perform all necessary functions associated with line sharing. Due to the extreme importance of capturing each of the Co-Providers' specific line sharing requirements of Qwest's OSS, Qwest and the Co-Providers worked together, as a joint team, over an extended period of time to effectively identify the Co-Providers' line sharing business needs. Once the Co-Providers' line sharing business requirements were defined, the joint team (Qwest and the Co-Providers) continued to work together to determine how the Co-Providers' line sharing business requirements impacted Qwest's OSS. In short, the modifications that were made to enable Qwest's OSS to support the Co-Providers line sharing needs directly resulted from feedback Qwest received from Co-Providers during the joint team's working sessions.

---

of $14 million is $11.9 million.

1 Recovery of OSS costs is allowed by the Telecommunications Act of 1996.[16] In
2 addition, in its first Line Sharing Order, the FCC specifically permitted recovery of
3 "reasonable incremental costs of OSS modification[s] that are caused by the
4 obligation to provide line sharing as an unbundled element."[17]

5 Qwest has worked diligently and in good faith with the Co-Providers to identify their
6 requirements for line sharing. The only costs for which Qwest is requesting line
7 sharing cost recovery are those that are solely attributable to line sharing.
8 Therefore, Qwest is entitled to recover the OSS costs associated with line sharing.

9 **Q. DOES THIS CONCLUDE YOUR TESTIMONY?**

10 A. Yes, it does.

---

[16] *Telecommunications Act § 252(d).*

[17] *Line Sharing Order ¶ 144* (emphasis added).

BEFORE THE ARIZONA CORPORATION COMMISSION

WILLIAM A. MUNDELL
CHAIRMAN
JIM IRVIN
COMMISSIONER
MARC SPITZER
COMMISSIONER

IN THE MATTER OF INVESTIGATION INTO QWEST CORPORATION'S COMPLIANCE WITH CERTAIN WHOLESALE PRICING REQUIREMENTS FOR UNBUNDLED NETWORK ELEMENTS AND RESALE DISCOUNTS	)	**DOCKET T-00000A-00-0194 PHASE II**

EXHIBITS OF

RENÉE ALBERSHEIM

QWEST CORPORATION

March 15, 2001

INDEX OF EXHIBITS

DESCRIPTION	EXHIBIT
System Descriptions of IMA-EDI, IMA-GUI AND EB/TA	RA-1
Gap Matrix	RA-2
Statement of Work for Shared Loop *(confidential)*	RA-3
Interim Line Sharing Agreement	RA-4
System Descriptions	RA-5
Raw Loop Data Product Description	RA-6
Descriptions of Modifications	RA-7

SYSTEM DESCRIPTIONS OF IMA-EDI, IMA-GUI AND EB/TA

Qwest provides Co-Provider access to two electronic interfaces for the pre-ordering, ordering, and provisioning of resale and unbundled network elements: Interconnect Mediated Access - Graphical User Interface (IMA-GUI) and Interconnect Mediated Access - Electronic Data Interchange (IMA-EDI).

Qwest provides Co-Providers access to two electronic interfaces for repair: IMA-GUI and Electronic Bonding and Trouble administration (EB/TA).

IMA-EDI – Interconnect Mediated Access - Electronic Data Interchange

Qwest has deployed a real-time, electronic interface called IMA-EDI. IMA-EDI gives Co-Providers access to the pre-ordering and ordering OSS functions through a computer-to-computer interface.

Co-Providers can use the same interface to send their pre-ordering and ordering transactions, which are processed by the same OSSs that provide these functions to Qwest's retail units. These transactions and their corresponding OSSs are provided in the table that begins on page 2 of this exhibit.

IMA-GUI - Interconnect Mediated Access-Graphical User Interface

Qwest has also deployed a real-time, human-to-computer, electronic interface called IMA-GUI, which allows Co-Providers access to each of the OSS functions necessary to support their customers' requests. IMA-GUI provides access to Qwest OSS functions through the use of a GUI. In so doing, IMA-GUI allows the Co-Provider's customer service representative to perform real-time

inquiry and selection functions and electronically transmit LSRs to Qwest for processing.

Like IMA-EDI, Co-Providers can use the same interface to send their pre-ordering and ordering transactions, which are processed by the same OSSs that provide these functions to Qwest's retail units. These transactions and their corresponding OSSs are provided below:

Function	Capability Type	OSS Supporting Function
Address Validation	Pre-Ordering	PREMIS (Premises Information System)
Service Availability Query	Pre-Ordering and Ordering	SONAR (Service Order Negotiation and Retrieval System – Internal Table)
Customer Service Record	Pre-Ordering	BOSS (Billing and Order Support System)
Facility Availability Query	Pre-Ordering	LFACS (Loop Facility Assignment Control System) via Facility Check.
Telephone Number Retrieval	Pre-Ordering and Ordering	PREMIS; CNUM
Telephone Number Selection	Pre-Ordering and Ordering	PREMIS; CNUM
Appointment Scheduling Retrieval	Pre-Ordering and Ordering	Appointment Scheduler
Appointment Scheduling Selection/Reservation	Pre-Ordering and Ordering	Appointment Scheduler
Carrier List	Pre-Ordering	SONAR (Service Order Negotiation and Retrieval System – Internal Table)
Product and Service Selection	Ordering	Not Applicable[1]

[1] The following transactions do not apply to Qwest's IMA-EDI interface because the Co-Provider's OSSs contain the pertinent information and perform the desired functions: product and service selection, customer listing creation, billing number selection, summary information review, order storage and retrieval. In the case of pre-

Function	Capability Type	OSS Supporting Function
Customer Listing Creation	Ordering	Not Applicable
Billing Number Selection	Ordering	Not Applicable
Summary Information Review	Ordering	Not Applicable
Order Storage and Retrieval	Ordering	Not Applicable
Order Submission	Ordering	IMA-GUI/IMA-EDI Architecture
Firm Order Confirmation	Ordering	IMA-GUI/IMA-EDI Architecture
Supplemental Order Submission	Ordering	IMA-GUI/IMA-EDI Architecture
Order Inquiry	Ordering	IMA-GUI/IMA-EDI Architecture
Order Completion	Ordering	IMA-GUI/IMA-EDI Architecture

EB/TA – Electronic Bonding and Trouble Administration

Qwest has deployed a real-time, computer-to-computer electronic interface called EB/TA for repair transactions. EB/TA allows the Co-Provider's customer service representative to make inquiries, receive proactive status notifications, and electronically transmit trouble reports to Qwest for processing. The Co-Providers' repair transactions can be submitted through either IMA-GUI or EB/TA and are processed by the same OSS that provide these functions to Qwest's retail units. These transactions and their corresponding OSS are provided below:

---

ordering transactions, Qwest provides the data in response to the pre-ordering query for use by the Co-Provider when performing ordering transactions.

Function	OSS Supporting Function
Trouble Report Creation	MEDIACC (Mediated Access) – LMOS (POTS) and WFA (Designed Services or Unbundled Network Elements)
Trouble Report Modification	MEDIACC (Mediated Access) – LMOS (POTS)
Trouble Report Inquiry	MEDIACC (Mediated Access) – LMOS (POTS) and WFA (Designed Services or Unbundled Network Elements)
Active Notification of Status Change	MEDIACC (Mediated Access) – LMOS (POTS) and WFA (Designed Services or Unbundled Network Elements)
Trouble Report Cancellation	MEDIACC (Mediated Access) – LMOS (POTS) and WFA (Designed Services or Unbundled Network Elements)
Trouble Report Closure	MEDIACC (Mediated Access) – LMOS (POTS) and WFA (Designed Services or Unbundled Network Elements)
Trouble Report History	MEDIACC (Mediated Access) – LMOS (POTS) and WFA (Designed Services or Unbundled Network Elements)
MLT	MEDIACC (Mediated Access) – MLT (POTS)

Gaps	Applications Impacted	Specific Issue	Interim Solution[1]	Deployment Timeframe [1]	Long-term Solution [1]	Deployment Timeframe [1]
Gap 1: LSR Modification & transmission of service order in system	IMA	Need a mechanism to identify shared line order. (Meet point, "CFA, UCA UPR", CLEC ID, TN, ADSL indicator).	Proprietary LSR based on USW and DLEC agreement. This may be done via email, fax, or by faking IMA to use existing fields. A team of service order writers and OBF reps could accomplish this goal.	TBD	Make the long term changes through the OBF, such that, common rules sets are established	TBD
Gap 2: Order writing (between ICADS and SOP)	ICADS (creating automation).	Need business rules added to process shared-line orders, and to create SO.	No Interim Requirement	No Interim Requirement	Dependant on the standards within OBF establishing a rule set.	4Q2000
	Fetch-n-stuff and Data Arbiter	Enhancement to perform shared line facility availability queries. Later phases.	No Interim Requirement	No Interim Requirement	These changes are understood and can be worked independently from the OBF issues.	TBD
	SOPAD, SOLAR, RSOLAR (creating automation).	An Enhancement is necessary to accept shared line orders and manage the service order flow with automation between systems.	No Interim Requirement	No Interim Requirement	Establish transformation from the OBF forms to the Internal USOCs and FIDs.	4Q2000

[1] All timeframes and solution definitions are estimates based on pending requirements work and information to be provided by 3rd parties. These estimates should be considered as planning estimates, and are based on the current understanding of systems capabilities assessed during the operational impact review. For this reason, the estimates may be subject to change.

Gaps	Applications Impacted	Specific Issue	Interim Solution [1]	Deployment Timeframe [1]	Long-term Solution [1]	Deployment Timeframe [1]
	Manual SO Entry in SOPAD, SOLAR, RSOLAR	An Enhancement is necessary to accept shared line orders and manage the service order flow with a manual service order entry procedure.	Establish internal USOCs and FIDs for all systems within the Operational Support Systems environment.	1Q2000	See the automation items.	See the automation items.
Gap 3: Connecting Point Inventory	LFACS (All regions)	Current phase no impacts. Later phase, enhancements to allow for designated assignment locations (constrained loop assignment) and to reuse in place voice facilities.	Establish internal USOCs and FIDs. No substantial impacts to LFACS	1Q2000	Work any manual issues that may have been over sights.	2Q2000

Gaps	Applications Impacted	Specific Issue	Interim Solution [1]	Deployment Timeframe [1]	Long-term Solution [1]	Deployment Timeframe [1]
	SWITCH and APP	Enhancements to associate the customer's line with the connection points for the splitter, switch equipment, and ICDF, while reusing existing voice facilities.	Inventory the splitter in SWITCH as miscellaneous equipment. The resulting Manual assignments will fallout in the LPC. DLEC will pass ME FID on the LSR.	1Q2000 in limited volume.	Remove all the manual workarounds.	4Q2000 Telcordia offer.
			APP -- To simulate the transactions performed by the loop provisioning personnel to clear RMAs in SWITCH. This is required to support volume growth.	2Q2000 – APP, Automates portions of the manual process that falls out to the LPC.		

Gaps	Applications Impacted	Specific Issue	Interim Solution[1]	Deployment Timeframe [1]	Long-term Solution [1]	Deployment Timeframe [1]
	WFA/C	Table work for proper dispatch and workflow.	No known issue.	No known issue.	Establish internal USOCs and FIDs.	1Q2000
Gap 4: Repair Handling	NSDB/WFA	Repair tickets will flow through. NSDB for the design portion of the service.	No Interim Requirement		Line assignments are required as a part of NSDB for the design portion of the repair.	1Q2000
	LMOS	Repair tickets will flow through. LMOS for the POTS portion of the service.	No Interim Requirement		Line assignments are required as a part of LMOS for the POTS portion of the repair.	1Q2000
Gap 5: No interface between FOMS and WFA/DI	FOMS and WFA/DI	Interface bring up and testing between FOMS and WFA/DI.	No Interim Requirement		Test and turn up on the interface based on a WC rollout plan. Determination of DLECs intended Service offering allows for a smoother implementation.	1Q2000 (ongoing dependant on the DLEC Rollout.

Gaps	Applications Impacted	Specific Issue	Interim Solution[1]	Deployment Timeframe [1]	Long-term Solution [1]	Deployment Timeframe [1]
Gap 6: Single product, multiple customer (need 2 billing records to be created from a single order.)	Billing (CRIS)	Enhancements to bill the Co-Provider for shared line charges. Must have 2 CSRs that are related.	This is a Bulk bill solution (DLEC BAN per state). A DLEC will receive a bill that indicates that lines are shared, but to validate specific TN information requires that the CSR be reviewed. Back billing will be used to bring accounts up to date if service is provisioned before the interim solution can be implemented.	2Q2000	The interim billing mechanisms need to be modified to show TN detail, but this impact is unknown. Conversions will be needed once the billing systems are modified.	TBD
Gap 7: Need to identify accounts that are resold in IMA so that CLEC's cannot place orders against the line for line-sharing	IMA	Identify resold accounts and reject line sharing orders as appropriate. Similarly, identify line shared accounts and reject resale orders as appropriate.	CLECs will review CSRs prior to placing orders. U S WEST will also review CSRs as Service Orders are written.		Accounts will have the Line Sharing USOCs and FIDs on the CSRs. The handling of the End Customers and CLECs would then be handled via Methods.	See gap 6. Required concurrent with order automation long term solutions in Gap 2.

Gaps	Applications Impacted	Specific Issue	Interim Solution[1]	Deployment Timeframe [1]	Long-term Solution [1]	Deployment Timeframe [1]
Gap 8: Identify a method to cause an entry to the DLECs loss report for disconnected service	Loss and Completion	Depending on specific scenarios for a customer transfer between providers, modifications to the Loss and Completion reports must be made.	No Interim Requirement		Pending the scenario work identified in the meeting 10/29/99	TBD

Arizona Corporation Commission
Docket No. T-00000A-00-0194
Qwest Corporation
Direct Testimony of Renee Albersheim
Exhibit RA-3 – Pages 1 through 43
March 15, 2001

REDACTED

INTERIM LINE SHARING AGREEMENT

This Interim Line Sharing Agreement ("Agreement") between U S WEST Communications, Inc. ("ILEC") and @Link Networks, Inc., BridgeBand Communications, Inc., CDS Networks, Inc., Contact Communications, DIECA Communications, Inc. d/b/a Covad Communications Company, Jato Communications Corp. on behalf of its operating subsidiaries Jato Operating Corp. and Jato Operating Two Corp., Montana Wireless, Inc., MULTIBAND Communications, Inc., New Edge Network, Inc. d/b/a New Edge Networks, NorthPoint Communications, Inc., RHYTHMS LINKS, INC., and Western Telephone Integrated Communications, Inc. ("CLEC" or "CLECs") is entered into this 24th day of April, 2000, to govern deployment of line sharing in the states of Arizona, Colorado, Idaho, Iowa, Montana, Nebraska, New Mexico, North Dakota, Oregon, South Dakota, Utah, Washington, and Wyoming. The Agreement is effective as of the date referenced in the preceding sentence and will terminate on a state-by-state, CLEC-by-CLEC basis when line sharing amendments to the interconnection agreements between ILEC and CLECs are approved by the relevant state public utility commissions as required by paragraph 36 below. ILEC and CLECs are referred to in this Agreement individually as a "Party" or collectively as the "Parties."

GENERAL

1. ILEC will provide CLEC with access to the frequency range above the voiceband on a copper loop facility used to carry analog circuit-switched voiceband transmissions. This frequency range will be referred to in this document as the "high frequency spectrum network element" or "HUNE". CLEC may use this access to provision any voice compatible xDSL technologies. Specifically permissible are ADSL, RADSL, G.lite and any other xDSL technology that is presumed to be acceptable for shared line deployment in accordance with FCC rules. Under this Agreement, "line sharing" is defined as the situation that exists when the CLEC has access to the HUNE and provides xDSL services on a loop that also carries ILEC POTS.

2. To order the HUNE, a CLEC must have a POTS splitter installed in the central office that serves the end-user of the loop. In addition, the CLEC must provide the end-user with, and is responsible for the installation of, a splitter, filter(s) and/or other equipment necessary for the end-user to receive separate voice and data services across the loop.

3. On or before June 6, 2000, ILEC will begin accepting orders for the HUNE on lines served out of every central office where CLEC has a POTS splitter installed.

4. Prior to July 31, 2000, the CLECs will not request conditioning of shared lines to remove load coils, bridged taps or electronics. If ILEC begins conditioning lines

for its xDSL services, CLECs will have the same option. By July 31, 2000, unless another date is agreed to by ILEC and CLEC in writing, the CLEC will be able to request conditioning of a shared line. ILEC will perform requested conditioning, including de-loading and removal of excess bridged taps, unless ILEC demonstrates in advance that conditioning that shared line will significantly degrade the end-user's analog voice service.

5. The CLECs initially will use ILEC's existing pre-qualification functionality and order processes to pre-qualify lines and order the HUNE. The CLECs will determine, in their sole discretion and at their risk, whether to order the HUNE across any specific loop. ILEC and the CLECs will continue to work together to modify these functionalities and processes to better support line sharing.

6. ILEC will initially provision the HUNE within the current standard unbundled loop provisioning interval at least 90% of the time. The Parties acknowledge that this interval may be subject to improvement based on systems mechanization and/or relevant state or federal regulatory orders.

POTS SPLITTER COLLOCATION AND OPERATION OF LINE SHARING EQUIPMENT

7. ILEC will provide CLEC with access to the shared line in one of the following ways, at the discretion of CLEC:

   (a) CLEC may place POTS splitters in ILEC central offices via Common Area Splitter Collocation. In this scenario, CLEC will have the option to either purchase the POTS splitter of its choosing or to have ILEC purchase the POTS splitter on the CLEC's behalf subject to full reimbursement. The CLEC will lease the POTS splitter to ILEC at no cost. Subject to agreed to or ordered pricing, ILEC will install and maintain the POTS splitter in the central office. ILEC will install the POTS splitter in one of three locations in the central office: (i) in a relay rack as close to the CLEC DSO termination points as possible; (ii) where an intermediate frame is used, on that frame; or (iii) where options (i) or (ii) are not available, or in central offices with network access line counts of less than 10,000, on the main distribution frame or in some other appropriate location, which may include an existing ILEC relay rack or bay.

   (b) CLEC may, at its option, place the POTS splitters in its own collocation area. ILEC will reclassify TIE cables, re-stencil framing, and perform any related work required to provision line sharing.

(c) Under either option (a) or (b), the POTS splitter will be appropriately hard wired or pre-wired so that ILEC is required to inventory no more than two points of termination.

8. In the event CLEC, or ILEC acting as purchasing agent for CLEC, is unable to procure line sharing equipment (i.e., POTS splitters, cabling, etc.) for Common Area Splitter Collocation in a timely manner, ILEC will proceed with the line sharing deployment schedules set forth in paragraphs 12 and 13 below and install the delayed equipment once the deployment for the subject state is completed. If the delayed equipment still is not available once the deployment for the subject state is completed, ILEC and CLEC will work together to establish an alternate deployment schedule for the affected central offices.

(a) If the ILEC, acting as purchasing agent for the CLEC, is unable to procure line sharing equipment for Common Area Splitter Collocation in a timely manner, then the CLEC may provide ILEC with the missing equipment. However, the deployment schedules set forth in this Agreement may be impacted. If impacted, the deployment will follow the terms and conditions described above.

(b) If ILEC is acting as purchasing agent for more than one CLEC in a central office and is unable to procure line sharing equipment for one or more of the CLECs in a timely manner, then none of the CLECs using the ILEC as purchasing agent will be able to order the HUNE in that central office until the equipment is installed for all such CLECs. This requirement does not apply to a CLEC that, upon being contacted by the ILEC of the equipment shortage, provides its own equipment to ILEC for installation. The CLEC will be notified by the ILEC of the required material on-site date for that central office and will have 2 business days to determine if the CLEC will be able to provide its own equipment.

9. CLEC and ILEC may use any POTS splitter that meets the requirements for central office equipment collocation set by the FCC in its March 31, 1999 order in CC Docket No. 98-147.

10. If a CLEC requests that a central office where it is not currently collocated be provisioned for line sharing, the CLEC will indicate its request on the collocation application for that central office.

11. CLEC will provide ILEC with applications for placement of POTS splitters in central offices based on the order set forth on the confidential Central Office Deployment List agreed to jointly by the CLECs and the ILEC and on the schedule set forth below. If the application date is missed by any CLEC, ILEC will accept the CLEC's late applications and install the POTS splitter within

30 days of the end of the schedule for the state where the central office is located or the normal interval for collocation under the CLEC's interconnection agreement, whichever is later. ILEC and CLEC will work together to resolve any problems with order-related data included on the applications within 5 business days of the CLEC receiving notification of the problems from ILEC. If the Parties are unable to resolve the problems after 5 business days, the application will be treated as a late application as defined above. Any changes received from the CLEC after 5 business days of the initial application date will also result in the application be treated as a late application.

First 145 Central Offices	March 24, 2000
Next 85 Central Offices	March 29, 2000
Next 65 Central Offices	April 3, 2000
Remaining Central Offices	April 10, 2000

12. Assuming CLEC reuses existing TIE cable capacity, ILEC will complete the TIE cable reclassification necessary to permit a CLEC to complete placement of POTS splitters in its own collocation areas in the central offices identified on the Central Office Deployment List based on the following schedule:

DATE	TOTAL NUMBER OF CUMULATIVE CENTRAL OFFICES
May 15, 2000	40-50
May 29, 2000	130-150
June 6, 2000	All remaining central offices identified on the Central Office Deployment List

Additional TIE cables will be installed in accordance with the standard intervals and processes set forth in the interconnection agreements between ILEC and CLECs at the completion of this deployment schedule or under an installation schedule mutually agreed upon by CLEC and ILEC. In situations where a CLEC places POTS splitters in its collocation areas, CLEC may begin placing orders for

the HUNE in the central offices identified on the Central Office Deployment List in accordance with the above schedule.

13. ILEC will complete Common Area Splitter Collocation in the central offices identified on the Central Office Deployment List based on the following schedule:

DATE	TOTAL NUMBER OF CUMULATIVE CENTRAL OFFICES
May 15, 2000	40-50
May 29, 2000	130-150
June 6, 2000	165-180
June 26, 2000	230-260
July 31, 2000	All remaining central offices identified on the Central Office Deployment List

If a CLEC chooses to have POTS splitters placed in central offices via Common Area Splitter Collocation, CLEC may begin placing orders for the HUNE in the central offices identified on the Central Office Deployment List in accordance with the above schedule.

14. To deploy POTS splitters in a central office identified on the Central Office Deployment List, the CLEC must either: (a) have an existing collocation presence in the central office; or (b) have pending applications for collocation in the central office as of March 10, 2000.

15. If ILEC receives an application for new collocation in a central office that does not appear on the Central Office Deployment List, or where the applying CLEC does not meet the requirements of the preceding paragraph, ILEC will treat the application as a standard collocation application under the terms and conditions of the applicable interconnection agreement. CLEC will be able to order the HUNE in such offices beginning on the date the collocation installation is completed or July 31, 2000, whichever is later.

16. ILEC and the CLECs agree to work together to address and, where necessary and possible, find solutions for the following "Line Sharing Implementation Issues": (a) the implementation of an effective phased process to handle CLEC orders for the HUNE; (b) ILEC's ability to handle the existing and forecasted volume of

CLEC orders for the HUNE; (c) ILEC's ability to make central office loop assignments for the existing and forecasted volume of CLEC orders for the HUNE; (d) the ability of ILEC and CLEC to coordinate repairs; (e) the experience and education of the shared line end-user; (f) the CLEC's forecasts of shared line orders; and (g) the process for conditioning loops for line sharing.

17. Beginning on April 1, 2000, the CLECs will provide ILEC with non-binding, good-faith rolling quarterly forecasts for shared line volumes on a state-by-state, central office-by-central office basis. Additionally, CLEC will provide a 1.5 year non-binding, good-faith forecast by quarter to ILEC by June 1, 2000. ILEC will keep CLEC forecasts confidential and will not share such forecasts with any person involved in ILEC retail operations, product planning or marketing.

REPAIR AND MAINTENANCE

18. ILEC will allow the CLECs to access the combined voice and data line at the point where it is cross-connected to the POTS splitter. Under the scenario described in paragraph 7(a) above, the point of demarcation will be at the place where the data loop leaves the POTS splitter on its way to the CLEC's collocated equipment. Under the scenario described in paragraph 7(b) above, the point of demarcation will be where the shared line is cross-connected to the POTS splitter.

19. ILEC will be responsible for repairing voice services provided over the shared line and the physical line between the network interface device at the end-user premise and the point of demarcation in the central office. ILEC also will be responsible for inside wiring in accordance with the terms and conditions of inside wire maintenance agreements, if any, between ILEC and the end-users. CLECs will be responsible for repairing data services provided over the HUNE portion of the shared line. Each Party will be responsible for maintaining its own equipment. The Party that controls the POTS splitter will be responsible for maintaining it.

20. ILEC and CLEC are continuing to develop repair and maintenance procedures and agree to document final agreed-to procedures in a methods and procedures document that will be available on ILEC's web site. In the interim, ILEC and CLEC agree that the following general principles will guide the repair and maintenance process:

    (a) If an end-user complains of a voice problem that may be related to the use of the shared line for data services, CLEC and ILEC will work together and with the end-user to solve the problem to the satisfaction of the end-user. ILEC will not disconnect the data service without the written permission of the CLEC unless the end-user's voice service is so degraded that the end-user cannot originate or receive voice grade calls.

(b) Each Party is responsible for its own end-user base and will have the responsibility for resolution of any service trouble report(s) from its end-users. ILEC will test for electrical faults (i.e., opens, shorts, and/or foreign voltage) on the shared line in response to trouble tickets initiated by the CLEC.

(c) When trouble has been reported by CLEC, and such trouble is not an electrical fault in ILEC's network, ILEC will charge CLEC any applicable charges approved by the relevant state public utility commission.

(d) When trouble reported by CLEC is not isolated or identified by tests for electrical faults, ILEC may perform additional testing as requested by CLEC on a case-by-case basis. If this additional testing uncovers electrical fault trouble in the portion of the network for which the ILEC is responsible under this Agreement, the CLEC will not be charged for the testing. If the additional testing uncovers a problem in the portion of the network for which the CLEC is responsible under this Agreement, the CLEC will be charged any applicable charges set forth in interconnection agreements between ILEC and CLECs or by the relevant state public utility commissions. Where no such charges exist, CLEC will pay for such testing on a time and materials basis.

21. When the POTS splitter is placed in the central office via Common Area Splitter Collocation, CLEC will order and install additional splitter cards as necessary to increase POTS splitter capacity from the initial installation. CLEC will leave one empty card in every shelf to be used for repair and maintenance until such time as the card must be used to fill the shelf to capacity.

22. When the POTS splitter is located in the CLEC collocation area, CLEC may install test access equipment in its collocation area for the purpose of testing the shared line. This equipment must comply with the safety requirements set forth in any applicable FCC rules. When the POTS splitter is placed in the central office via Common Area Splitter Collocation, CLEC will have the ability to perform intrusive testing at the test access point on a line-by-line basis.

PRICING

23. ILEC and the CLECs agree to the following negotiated, interim prices for shared lines, splitter collocation and other elements noted in the following table:

Category	Element	Interim Price
Shared Line Non-Recurring	Installation option is basic installation – lift and lay	IA* price for basic installation – lift and lay
Shared Line Recurring	HUNE	Paragraph 25
	2 ITP/EICT – Interconnection Tie Pairs or	IA price

	Expanded Interconnection Channel Terminations	
Common Area Splitter Collocation Non-Recurring	Installation	$5,000.00 per shelf
Common Area Splitter Collocation Recurring	Equipment bay – per shelf	$4.85 per shelf
Cost of POTS splitters if provided by ILEC	POTS splitter	Market cost – in addition to the $5,000.00 flat rate
Non-recurring for TIE cable reclassification	TIE cables	Time and material for engineering and labor
Repair and Maintenance	Trouble Isolation and Additional Testing	Paragraph 20 (c) and (d)
Line Conditioning	Load Coil and Excess Bridged Tap Removal	IA price

* The relevant interconnection agreement between ILEC and CLEC.

24. ILEC and CLECs will continue work to arrive at appropriate cost recovery for operational support systems upgrades related to the shared line.

25. CLECs may choose from either of the following options for an interim recurring shared line rate:

    (a) A rate of $5.40 per month per shared line; or

    (b) A rate of $0 per month per shared line until January 1, 2001. On January 1, 2001, the interim recurring shared line rate will change to $8.25 unless ILEC continues to charge a rate of $0 per month per shared line to one or more CLECs as of that date. In the event ILEC continues to charge a rate of $0 per month per shared line to one or more CLECs as of January 1, 2001, ILEC will continue to charge all CLECs that selected this interim recurring shared line rate option a rate of $0 per month per shared line until such time as it begins to charge all CLECs $8.25 per month per shared line.

    CLECs must select one of the foregoing options for an interim recurring shared line rate by May 1, 2000, and must notify ILEC of their selection through their account teams. Once a selection is made, a CLEC cannot change its selection.

26. All interim prices will be subject to true up based on either mutually agreed to permanent pricing or permanent pricing established in a line sharing cost proceeding conducted by state public utility commissions. In the event interim prices are established by state public utility commissions before permanent prices are established, either through arbitration or some other mechanism, the interim prices established in this Agreement will be changed to reflect the interim prices

mandated by the state public utility commissions; however, no true up will be performed until mutually agreed to permanent prices are established or permanent prices are established by state public utility commissions.

27. During the 60 day period immediately following the effective date of this Agreement, the Parties agree to negotiate in good faith in an effort to arrive at mutually agreed to permanent pricing for all of the elements listed in paragraph 23 above and operational support system upgrades related to line sharing. If at the conclusion of this 60 day period, the Parties have been unable to mutually agree to permanent pricing for some or all of such elements and/or operational support system upgrades related to line sharing, the Parties agree to ask the state public utility commissions for each of the states listed in the introductory paragraph of this Agreement to initiate a line sharing cost proceeding to establish permanent pricing for all elements, potentially including operational support system upgrades related to line sharing, still in dispute at that time.

OTHER

28. This Agreement constitutes the entire agreement between the Parties and supersedes all prior oral or written agreements, representations, statements, negotiations, understandings, proposals, and undertakings with respect to the subject matter hereof.

29. ILEC and CLEC enter into this Agreement without waiving current or future relevant legal rights and without prejudicing any position ILEC or CLEC may take on relevant issues before state or federal regulatory or legislative bodies or courts of competent jurisdiction. This clause specifically contemplates but is not limited to: (a) the positions ILEC or CLEC may take in any cost docket related to the terms and conditions of line sharing; and (b) the positions that ILEC or CLEC might take before the FCC or any state public utility commission related to the terms and conditions under which ILEC must provide CLEC with access to the HUNE.

30. The provisions in this Agreement are based, in large part, on the existing state of applicable law, rules, and regulations ("Existing Rules"). Among the Existing Rules are certain FCC orders, including the FCC's Third Report and Order in CC Docket No. 98-147 and Fourth Report and Order in CC Docket No. 96-98 released on December 9, 1999, which currently are being challenged. To the extent the Existing Rules are changed, vacated, dismissed, stayed or modified, the Parties shall amend this Agreement to reflect such change, vacation, dismissal, stay, or modification. Where the Parties fail to agree upon such an amendment, all disputed issues will be resolved in accordance with the dispute resolution provisions of the interconnection agreements between ILEC and CLECs incorporated by reference into this Agreement.

31. In addition to those provisions specifically referenced elsewhere in this Agreement, the provisions in the interconnection agreements between ILEC and CLECs related to the following are incorporated by reference into this Agreement: (a) limitation of liability; (b) indemnification; (c) force majeure; (d) warranties; and (e) dispute resolution. These provisions are incorporated on a state-by-state, CLEC-by-CLEC basis.

32. This Agreement is the joint work product of the Parties, has been negotiated by the Parties and shall be interpreted fairly in accordance with its terms and conditions. In the event of any ambiguities, no inferences shall be drawn against any Party.

33. This Agreement only may be amended in writing executed by all Parties to be bound by the amendment.

34. During the term of this Agreement, if ILEC either (a) enters into an agreement with any Party that modifies the rates, terms, and conditions of this Agreement as applied to that Party, or (b) enters into any other agreement for line sharing with any party containing rates, terms, and conditions different from those in this Agreement, ILEC will make such modified or different rates, terms, and conditions available to any interested Party. To the extent the modified or different rates, terms, and conditions are provided by ILEC only in certain locations or pursuant to some other limitation, then the modified or different rates, terms, and conditions only will be made available to interested Parties in those locations or subject to those same limitations. Unless otherwise agreed to by the Parties, this paragraph will not be incorporated into any interconnection agreement amendments entered into between ILEC and CLECs pursuant to paragraph 36 below.

35. This Agreement may be executed in multiple counterparts, each of which shall be deemed an original, but all of which shall together constitute but one and the same document. This Agreement may be executed where indicated below either by an original signature of a duly authorized representative of each Party or by a facsimile of such a signature.

36. ILEC and CLECs acknowledge the need to execute amendments to their interconnection agreements by June 6, 2000, to govern line sharing. The Parties further acknowledge that the rates, terms, and conditions of this Agreement will form the basis for the negotiation of the amendment. This Agreement will terminate upon execution of such amendments and will be replaced by the amendments. ILEC and CLEC further agree that any applicable window for petitioning a state public utility commission for arbitration of an interconnection agreement amendment for line sharing that would expire before June 6, 2000 is extended to June 16, 2000.

37. The Parties will work together to schedule a conference call with the state public utility commissions for each state listed in the introductory paragraph to this Agreement to explain this Agreement and answer any questions related to the Agreement. The Parties agree to work together to schedule and provide notice of the call in the most efficient and expeditious manner possible. The Parties further agree to respond to any questions or information requests from state public utility commissions in a joint manner and, in so doing, take all reasonable steps to preserve the confidentiality of the Central Office Deployment List.

38. The Parties will work together in good faith to address any problems that may arise in the execution of any part of this Agreement.

39. Any CLEC that is not a party to this Agreement may opt into this Agreement at any time prior to its expiration. CLECs must notify ILEC of which of the two options for interim shared line rates outlined in paragraph 25 above it selects at the time it opts into this Agreement or by May 1, 2000, whichever is later.

U S WEST, Inc.		**@Link Networks, Inc.**
John A. Kelley		Tim O'Neill
President – Wholesale Markets		Chief Network Officer
Date		Date

BridgeBand Communications, Inc.		**CDS Networks, Inc.**
Jon M. Hesse		Cleve Tooker
Chief Operating Officer and In-House Counsel		President
Date		Date

Contact Communications		**DIECA Communications, Inc.**

Arlen Taggart		Dhruv Khanna
Vice President		General Counsel
Date		Date

Jato Communications Corp. **Montana Wireless, Inc.**

Patrick M. Green		Joan Mandeville
Vice President – Carrier Relations		Vice President – Administration
Date		Date

MULTIBAND Communications, Inc. **New Edge Network, Inc.**

Tim Dodge		Robert Y. McMillin
Executive Vice President		Director – Interconnection
Date		Date

NorthPoint Communications, Inc. **RHYTHMS LINKS, INC.**

Steve Gorosh		Eric Geis
Vice President and General Counsel		Senior Vice President of Regulatory Affairs and Development
Date		Date

Western Telephone Integrated Communications, Inc.

Cleve Tooker		
President		
Date		

System Descriptions

Appointment Scheduler

Appointment Scheduler is a system that manages technician schedules. Ordering systems, such as SONAR, IMA, electronically interface with Appointment Scheduler to reserve technician time slots.

APRIL (Automatic Provisioning Infrastructure Layer)

APRIL receives and views all Service Orders for special service activation. These services include, but are not limited to SS7, POTS, ISDN and AIN services.

BOSS (Billing and Order Support System)

BOSS is the system that manages the Customer Service Record (CSR). CSRs contain account status, billing, listing and services and equipment information. This system serves Qwest's central and eastern regions.

CARS (Customer Account Retrieval System)

CARS is the system that manages the Customer Service Record (CSR). CSRs contain account status, billing, listing and services and equipment information. This system serves Qwest's western region.

CNUM (Customer NUMber Management System)

CNUM is a Telcordia supported system designed to support telephone number administration, service negotiation, and service activation. CNUM provides a single repository for number administration that is technology and service independent. Along with ALOC, CNUM will replace PREMIS.

CRIS (Customer Records Information System)

CRIS is a billing system for the majority of residence and business account bills for exchange services. It calculates, prints, and mails bills to individual retail end-user customers for retail products, and Co-Providers for some interconnect (wholesale) products. After rating usage, CRIS posts service order processing updates, provisioning information, rating data, tolls, cash treatments, bills, payments, journal entries or adjustments, rate changes, message processing and other billing related information to the CSRs.

Data Arbiter

This system provides access from UNIX-based systems to PREMIS, BOSS/CARS, TIRKS, LFACS, and LMOS.

DELIVER/C (DELIVER/CONTROL)

DELIVER/C is a graphical user interface (GUI) which allows its Qwest's repair representatives to communicate with WFA/C for design services.

EB/TA (Electronic Bonding / Trouble Administration)

EB/TA is an interface for trouble reporting and Mechanized Loop Testing (MLT) results. EB/TA allows the Co-Provider's customer service representative to make inquiries, receive proactive status notifications, and electronically transmit trouble reports to Qwest for processing.

Facility Check

Facility Check is a Netscape-based interface used to access LFACS to determine whether loop facilities will be available for new service to a specific customer site.

FACS (Facility Assignment and Control System)

FACS is an "umbrella" term that includes LFACS, SWITCH, and SOAC.

FnS (Fetch-N-Stuff)

This system provides a common point of access to Qwest's OSSs using a standard application programmer interface (API) to simplify data access. Fetch 'N' Stuff accesses Appointment Scheduler, BOSS/CARS, CNUM, PREMIS, Facility Check, and WFA/DO.

FOM (Firm Order Manager)

The FOM is part of the IMA architecture that manages LSRs.

FOMS (Frames Operation Management System)

FOMS is a dispatch-in system for central office wiring instructions used by central office technicians

IABS (Integrated Access Billing System)

IABS is a billing system, focused on access or facility driven billing, whose functionality includes switched and special service orders, meet point billing, mechanized adjustments for interexchange carriers and other facilities based Co-Provider accounts.

IMA-GUI and IMA-EDI (Interconnect Mediated Access- Graphical User Interface and Interconnect Mediated Access- Electronic Data Interchange)

These two electronic interfaces provide Co-Providers with access to all of the functions necessary for the pre-ordering, ordering, and provisioning of resale and unbundled network elements

LEIS (Loop Engineering Information System)

LEIS is a downstream system of LFACS, with LFACS-equivalent data. The primary function of LEIS is to offload queries that would normally go to LFACS so that LFACS may perform its primary functions.

LFACS (Loop Facility Assignment and Control System)

LFACS is a component of FACS which maintains a mechanized inventory of outside plant facilities, (e.g., facility addresses, cables, cable pairs, serving

terminals, cross connection devices, loops, etc.) and assigns the outside plant facilities to assignment requests received from SOAC as a result of customer service order activity.

LMOS (Loop Maintenance Operations System)

LMOS is a repair system for POTS services that provide trouble entry, tracking and work status. LMOS Host stores detailed line record information and maintains historical data of closed troubles.

LSMS (Local Service Management System)

LSMS is the local service provider's network database that holds downloaded ported number information.

MARCH

MARCH provides an automated means of passing service-defining line-side switching machine translations to stored program controlled switches.

MEDIACC (MEDIated ACCess)

MECIACC is a system that provides a common electronic gateway for processing repair requests, created by external entities. MEDIACC supports repair reports for both Interexchange Carriers and Co-Providers.

MLT (Mechanized Loop Testing)

This is a system that tests and analyzes the condition of customer loops. MLT provides test results that assist in decision regarding trouble flow.

NSDB (Network and Services DataBase)

NSDB stores customer and circuit data for special service, message, carrier, and enhanced nondesigned services. This data is received from the Service Order Analysis and Control (SOAC) system during service order activity, and from the Telcordia TIRKS® system upon the issue or reissue of the Work Order Record and Details (WORD) document. NSDB also receives circuit and customer data updates and order completion notifications from WFA/C.

PAWS (Provisioning Analyst Workstation System)

PAWS manages requests for manual assistance (RMA) work and assigns them to the loop provisioning center according to the type of error as recognized by LFACS for correction. PAWS also serves a similar function for errors that fall out as RMAs for SWITCH.

PREMIS (PREMises Information System)

PREMIS is a legacy system that supports service negotiation for residence and small business. PREMIS provides address validation, telephone number selection, and interexchange carrier selection. PREMIS will be replaced by a suite of systems-ALOC, CNUM, and PIC Selection.

RCE (Repair Call Expert)

RCE assists a Repair Service Agent (RSA) in handling customer repair calls. RCE supports the customer interview process by providing the RSA with an appropriate sequence of questions along with hints to guide the interaction with the customer. A primary goal of RCE is to enable the front-end closing of a significantly higher percentage of reported troubles than is typically achieved without such assistance. For troubles that do require additional handling, RCE generates trouble-reporting details in a consistent manner such that downstream processing can be performed more effectively.

SMS (Service Management System)

SMS is a hardware and software platform that supports the porting of telephone numbers. In concert with the Number Portability Administration Center (NPAC), SMS receives customer information from the old and new service providers (including the new location routing number), validates the information received, and downloads the new routing information when an "activate" message is received indicating that the customer has been physically connected to the new service provider's network. NPAC/SMS also contains a record of all ported numbers and a history file of all transactions relating to the porting of a number.

SOAC (Service Order Analysis and Control)

SOAC is a Telcordia system that controls the flow of service orders activity from Qwest service order processors (SOPs), to other downstream systems. Based on the service order input, SOAC determines which operations systems need to be involved in activating service, and provides instructions and sequencing to those operations systems.

SONAR (Service Order Negotiation and Retrieval)

SONAR is a system used to create and submit service orders for non-designed services for residential and small business customers.

SOP (Service Order Processors)

SOLAR (Service Order Logistics and Reference), SOPAD (Service Order Processor and Distribution) (CORD for western), and RSOLAR (Regional SOLAR). Within each region, the corresponding SOP for that region directs/processes service orders for all product types. SOPAD is the SOP in the central region. SOPAD distributes the order to necessary systems such as directory listings, E911, and billing systems. SOLAR is the SOP in Qwest's eastern region; RSOLAR is the SOP in the western region.

SWITCH

SWITCH is a central office inventory system. With cable pair data from LFACS and telephone number inventory information from CNUM, SWITCH

completes the initial step in designing the circuit package. SWITCH supports line-side and trunk-side central office provisioning of digital, analog, and packet switching facilities by providing connection information for central office personnel.

WFA (Work Force Administration)

This is an umbrella term that includes three subsystems: WFA/C, WFA/DI and WFA/DO. WFA/C (Work Force Administration/Control) mechanizes the administration of the installation and maintenance of designed and non-designed circuits. WFA/C directs the flow of work items to WFA/DO and WFA/DI. WFA/DI automates the work assignments of the technicians working within the central offices. WFA/DO automates the support of the dispatch function for outside plant installation, maintenance and routine work. WFA/DO provides screening, pricing, mapping, routing, scheduling and loading functions within a dispatch center.

wholesale markets

DATE

July 18, 2000

PRODUCT NAME

Raw Loop Data (RLD) Tool

PRODUCT DEFINITION

The RLD tool provides data in bulk format to the Co-Providers about loop make-up characteristics at the wire center level. The data includes CLLI code, load coil, bridged tap, wire gauge, cable and pair make-up, and similar information on a loop-by-loop basis.

There is a web-site maintained by Qwest where Co-Providers may access the RLD tool. To gain access to the web-site, Co-Providers must obtain a digital certificate from Qwest. The RLD tool is presented in an ASCII text file and can be downloaded to an Excel format or database built by the Co-Provider. The web-site address is http://ecom.uswest.com.

The data available via the RLD tool will be loaded/refreshed every month on a wire center basis. There will be approximately 60 wire centers loaded/refreshed each business day with a 20 business day cycle to load/refresh the data for all of Qwest's wire centers.

All information referenced will be provided as is, with any errors and omissions that exist in Qwest's records.

Co-Providers may access the RLD tool 7 days a week, 24 hours a day.

The RLD is available immediately to Co-Providers as they become eligible with a digital certificate.

Data Fields

Qwest will provide the following data via the RLD tool:

1. **Telephone Number**
2. **Wire Center CLLI Code**
3. **Cable Name**
4. **Pair Name**
5. **Terminal Address**
6. **Segment (e.g. F1, F2, etc.)**
7. **Sub Segment (e.g. segment 1 of F1)**
8. **Segment Length**
9. **Gauge**
10. **Bridge-Tap Length**
11. **Length Units**
12. **Bridge-Tap Offset Distance**
13. **Load Coil Type**
14. **Pair Gain**
15. **Composition of loop**
16. **MLT Distance**
17. **House Number**
18. **Street**
19. **Unit**
20. **Floor**
21 **Building**
22. **Community (e.g., City)**
23. **State Code**

Raw Data Example:

The RLD tool contains the following data entries. If a specific data item is not available or does not pertain to a particular loop, then the field entry will be blank. For instance, if the loop only consists of F1 and F2, then the entry fields that correspond to F3 through F9 would be empty. Commas separate field entries and an empty field is designated by:

```
FILE_CREATION_DATE,WIRE_CENTER_CLLI,TELEPHONE_NUMBER,F1_CABLE_NAME,F2_CABLE_NA
ME,F3_CABLE_NAME,F4_CABLE_NAME,F5_CABLE_NAME,F6_CABLE_NAME,F7_CABLE_NAME,F8_CA
BLE_NAME,F9_CABLE_NAME,F1_PAIR_NUMBER,F2_PAIR_NUMBER,F3_PAIR_NUMBER,F4_PAIR_NU
MBER,F5_PAIR_NUMBER,F6_PAIR_NUMBER,F7_PAIR_NUMBER,F8_PAIR_NUMBER,F9_PAIR_NUMBE
R,F1_TERMINAL_ID,F2_TERMINAL_ID,F3_TERMINAL_ID,F4_TERMINAL_ID,F5_TERMINAL_ID,F
6_TERMINAL_ID,F7_TERMINAL_ID,F8_TERMINAL_ID,F9_TERMINAL_ID,F1_MAKE_UP_DESC,F2_
MAKE_UP_DESC,F3_MAKE_UP_DESC,F4_MAKE_UP_DESC,F5_MAKE_UP_DESC,F6_MAKE_UP_DESC,F
7_MAKE_UP_DESC,F8_MAKE_UP_DESC,F9_MAKE_UP_DESC,F1_BRIDGE_TAP_OFFSET_DESC,F2_BR
IDGE_TAP_OFFSET_DESC,F3_BRIDGE_TAP_OFFSET_DESC,F4_BRIDGE_TAP_OFFSET_DESC,F5_BR
IDGE_TAP_OFFSET_DESC,F6_BRIDGE_TAP_OFFSET_DESC,F7_BRIDGE_TAP_OFFSET_DESC,F8_BR
IDGE_TAP_OFFSET_DESC,F9_BRIDGE_TAP_OFFSET_DESC,F1_LOAD_COIL_TYPE,F2_LOAD_COIL_
TYPE,F3_LOAD_COIL_TYPE,F4_LOAD_COIL_TYPE,F5_LOAD_COIL_TYPE,F6_LOAD_COIL_TYPE,F
7_LOAD_COIL_TYPE,F8_LOAD_COIL_TYPE,F9_LOAD_COIL_TYPE,F1_PAIR_GAIN_TYPE,F2_PAIR
```

```
_GAIN_TYPE,F3_PAIR_GAIN_TYPE,F4_PAIR_GAIN_TYPE,F5_PAIR_GAIN_TYPE,F6_PAIR_GAIN_
TYPE,F7_PAIR_GAIN_TYPE,F8_PAIR_GAIN_TYPE,F9_PAIR_GAIN_TYPE,MLT_DISTANCE,HOUSE_
NUMBER,STREET_NAME,UNIT,FLOOR,BUILDING,COMMUNITY,STATE_CODE
```

The loop make-up txt file would appear as follows, the commas separate the fields:

```
06-19-2000,CHNDAZMA,,25,1330P,,,,,,,,1086,773,,,,,,,,X 1330 W PALO VERDE DR,F
1843 W ALAMO DR,,,,,,,,24NL 23.810kf ,24NL
7.016kf,,,,,,,,,,,,,,,,,,H88,,,,,,,,,NO_PG,NO_PG,,,,,,,,34800,1846,W ALAMO
DR,,,,,
06-19-2000,CHNDAZMA,,25,1330P,,,,,,,,1086,773,,,,,,,,X 1330 W PALO VERDE DR,F
1843 W ALAMO DR,,,,,,,,,24NL
7.016kf,,,,,,,,,,,,,,,,,,H88,,,,,,,,,NO_PG,NO_PG,,,,,,,,34800,1846,W ALAMO
DR,,,,,
06-19-2000,CHNDAZMA,,IPG1,1960D,,,,,,,,1825,355,,,,,,,,X 1960 N DOBSON RD,2019
W LEMON TREE PL 1174,,,,,,,,26NL 0.760kf 19NL 0.020kf ,26NL
0.165kf 24NL 0.802kf,,,,,,,,,,,,,,,,,,,,,,,,,,,,,,,ISLC96,NO_PG,,,,,,,,,2019,W
LEMON TREE
PL,1174,,,,
```

Data from the RLD tool can be downloaded into an Excel spreadsheet or a database provided by the Co-Provider. The format of the text files will remain constant.

Accessing the RLD tool for loop make-up information

The following is the process Co-Providers must follow to gain access to the web-site where the RLD tool resides

1. **To access the bulk wire center loop make-up data, the Co-Provider must have a digital certificate. A digital certificate is required for each Co-Provider employee that will be requesting the loop make-up data. If a Co-Provider employee does not currently have a digital certificate, they can obtain one by requesting an id from their Account Manager.**

2. **The Co-Provider must provide their Account Manager with the names and telephone numbers of their employees who will be accessing the loop make-up files. The employees' e-mail address is optional.**
3. **The account manager must establish the necessary permissions for the Co-Provider to access the loop make-up files.**
4. **Once the permissions are established, the Co-Provider employees can access the loop make-up data by accessing http://ecom.uswest.com and then clicking on the " Get a Certificate" link. (NOTE: When the Co-Provider employee does subsequent log ins,**

they will choose the "I Have a Certificate" link.)This will display all of the sites available to that Co-Provider employee including the Raw Loop Data, "rld", site.

5. **Click on the Raw Loop Data site and a list of all the Qwest wire centers in alphabetical order by CLLI will be returned.**
6. **Click on the desired CLLI and the raw data file for that wire center will be returned.**
7. **The file is an ASCII text file that can be downloaded by "cut" and "paste" commands. The Co-Providers can download and save the files according to their preferences.**

DESCRIPTIONS OF MODIFICATIONS

Line sharing will be implemented in two phases. The first phase addresses the modifications necessary to accomplish line sharing in the central office - either in the Co-Provider's collocation area or in the common area. The second phase allows the splitter to be placed in a remote terminal.

To accommodate line sharing, systems and processes must be modified. It is also be necessary to introduce new data elements that are communicated between the companies involved in sharing the line and stored in new or existing databases. This document describes first, the additional data required to support line sharing. Second, it describes the systems used for pre-ordering, ordering, and provisioning, as well as the changes needed to support line sharing. The document also includes a diagram depicting the relationship between these systems. Further, this document describes the systems used for repair, the changes needed to support line sharing, and displays a diagram depicting the relationship between these systems. Finally, there is a description of the billing system and the modifications needed to support line sharing.

NEW DATA ELEMENTS

Three new FIDs (field identifiers) were introduced. The data needed consists of:

UNN = Data Co-Provider identifier (RSID, ZCID, DLEC equivalent)

UNE = Data Co-Provider circuit ID (currently, the end-user's telephone number)

UCP = Cable & pair equivalent comprised of the following fields (Type, Meet Point (point of termination to the splitter), Central office or Field indicator, and Optional (power spectrum density mask).

PRE-ORDERING

Co-Providers use the functionality of IMA, which is comprised of GUI and EDI components, to determine if the line is qualified for ADSL service. To further support line sharing, particularly in regards to Co-Providers' acquisition of customer loop information, Qwest, beginning mid-year 2000, has begun to provide Co-Providers with electronic batch files containing loop information on a per wire center basis. The batch files Qwest provides to Co-Providers contain listings of all active telephone numbers within a particular wire center as well as additional loop information for each telephone number listed. Co-Providers access these batch loop files through a Co-Provider-accessible, Qwest web site. The batch files are refreshed on a rolling basis monthly.

ORDERING

The IMA (GUI/EDI) gateway is comprised of two electronic interfaces used to provide Co-Providers access to pre-ordering, ordering, provisioning, and repair functionality of resale and unbundled network elements.

- To support line sharing, the IMA gateway was modified to allow for additional data elements, including, but are not limited to 1) request type (a request for line sharing); 2) TOS (type of service); 3) circuit ID (UNE FID); and 4) meet point (UCP FID). This functionality includes edit functions for syntax and cross-edit requirements for all of the new data elements. The LSR was modified to allow for the new data elements to be passed to Qwest to support line sharing. The proposed modifications were introduced to the Ordering and Billing Forum (OBF) in early February 2000 by Qwest with the concurrence of the participating Co-Providers.

SONAR is the system used to create and submit service orders for nondesigned services for residential and small business customers.

- To support line sharing, SONAR must be modified to recognize that the account on which an order is being issued has a shared line to ensure the voice products/services being ordered are compatible with data services.

There are three service order processors, collectively called the SOPs. SOLAR (service order logistics and reference) is the SOP in Qwest's eastern region, SOPAD (service order processor and distribution) is the SOP in Qwest's central region, and RSOLAR (Regional SOLAR) is the SOP in Qwest's western region.

- To support line sharing, these SOPs must also be modified to accept the new FIDs and to exhibit specific behavior based on the presence of those FIDs. To support line sharing, the SOPs must create and distribute one record to LMOS for repair purposes and two records to CRIS for billing purposes.

SOAC controls the flow of service order activity from the SOPs to the downstream systems. Based on the type of service order, SOAC determines which downstream systems need to be involved in activating service, and provides instructions and sequencing to those systems.

- To support line sharing, SOAC must recognize that this is an order to share the line, perform proper telephone number treatment within CNUM, and create and distribute one record to NSDB for repair. To perform this for line sharing is new functionality. In addition, it must interpret the UCP FID information and determine if the splitter will be placed in the central office or in a remote terminal. If the splitter is placed in the central office, SOAC will send the information to SWITCH for assignment. If the splitter is placed at a remote terminal, SOAC will send the information to LFACS for assignment.

PROVISIONING

LFACS maintains a mechanized inventory of outside plant facilities and assigns the outside plant facilities to assignment requests received from SOAC. It also provides cable & pair information, addresses, and terminal locations to SOAC.

- To support line sharing, LFACS has to recognize and receive the meet point information from the UCP FID and inventory it as a cable & pair assignment when a remote line sharing request is made. LFACS must also recognize when the line sharing request is to be a central office solution and ignore the connection information and allow SWITCH to perform the assignment function. In addition, it must designate that the line should not be line station transferred to ensure that the end-user's line is not replaced with a loop that is not DSL-capable.

SWITCH is a central office inventory system. It takes the telephone number information and the cable & pair information from LFACS and guides the information to the correct network location. SWITCH supports line-side and trunk-side central office provisioning of digital, analog, and packet switching facilities by providing connection information for central office personnel.

- To support line sharing, SWITCH has to recognize and receive the meet point information from the UCP FID and inventory it as a miscellaneous equipment. In addition, there are conversion activities associated with this new functionality. Qwest has supported line sharing in a quasi-manual mode and the original inventory information has been input as free flow text behind a FID. To begin using the new functionality in SWITCH, Qwest must build the inventory by parsing the free flow text, analyzing it and inputting it into the database.

MARCH / APRIL are systems that receive and review all orders for special service activation.

- To support line sharing on a finished voice service, APRIL must be able to pass the service order without errors. In the event that a data Co-Provider wishes to share an unbundled loop with a voice Co-Provider, these systems must remove the telephone number / office equipment (voice switch location) relationship. In addition, two meet points must be inventoried and assigned: one for the voice Co-Provider's unbundled loop and one for the data Co-Provider's splitter port location.

WFA/DO automates the support of the dispatch function for outside plant installation, repair, and routine work. WFA-DO provides screening, pricing, mapping, routing, scheduling, and loading functions within a dispatch center.

- To support line sharing, WFA/DO will have to recognize that this is a line sharing order when dispatching for installation and repair. In addition, it will have to recognize a line sharing order when performing the service order complete process.

WFA/DI automates the work assignments of the technicians working within the central offices.

- To support line sharing, WFA/DI must interface with FOMS, which is a dispatch-in system for central office wiring instructions used by central office technicians. In addition, WFA/DI must recognize that this is a line sharing order when performing the SOP auto-complete process.

NSDB stores customer and circuit data for special service, message, carrier, and enhanced nondesigned services. The NSDB line record must have indicators that are descriptive to a technician that this line is shared. This is necessary because in the event that repair is required, the technician must understand the condition of the line.

- To support line sharing, NSDB must recognize that this is a shared line when it stores the record for repair purposes.

WFA/C mechanizes the administration of the installation and maintenance of designed and nondesigned circuits. It also directs the flow of the work items to WFA/DO and WFA/DI.

- To support line sharing, WFA/C must recognize that this is a shared line, be able to accept the new data, and allow for auto-completion of line sharing orders.

LMOS is a repair system for POTS services that provide trouble entry, tracking and work status.

- To support line sharing, LMOS must be able to receive the completed service order and record the line record as a shared line. Although this data is recorded similarly to the way it is recorded in NSDB, it is also necessary to record it in LMOS because the additional skills required to repair a simple POTS line that has a more complex wiring arrangement are typically found in a designed services technician. This allows both technicians to have knowledge of the condition of the line.

PAWS (Provisioning Analyst Workstation System) is a downstream system from SOAC and LFACS. Service orders that contain errors (e.g. incorrectly entered loop data) sometimes make their way partially through the downstream systems

without the SOPS recognizing the errors. A service order with this type of error can drop out of either SOAC or LFACS as a request for manual assistance (RMA). The RMA is sent to PAWS. PAWS manages the RMA work list and assigns them to the appropriate loop provisioning center (LPC) according to the type of error as recognized by LFACS for correction. PAWS also serves a similar function for errors that fall out as RMAs for SWITCH.

- To support line sharing, PAWS must recognize incorrect splitter location requests based on information contained in SWITCH or LFACS, depending on the type of line sharing requested. In addition, PAWS must recognize the three FIDs associated with orders for line sharing. PAWS must also recognize that this is a line shared order to properly route the RMA to the appropriate technicians with the skills to remedy errors specific to line sharing orders.

LEIS (Loop Engineering Information System) is a downstream system of LFACS, with LFACS-equivalent data. The primary function of LEIS is to offload queries that would normally go to LFACS so that LFACS may perform its primary functions.

- To support line sharing, LEIS has to recognize and receive the meet point information from the field identifier (FID) and inventory it as a cable & pair assignment when a remote line sharing request is made.

Line Sharing Ordering and Provisioning Flow

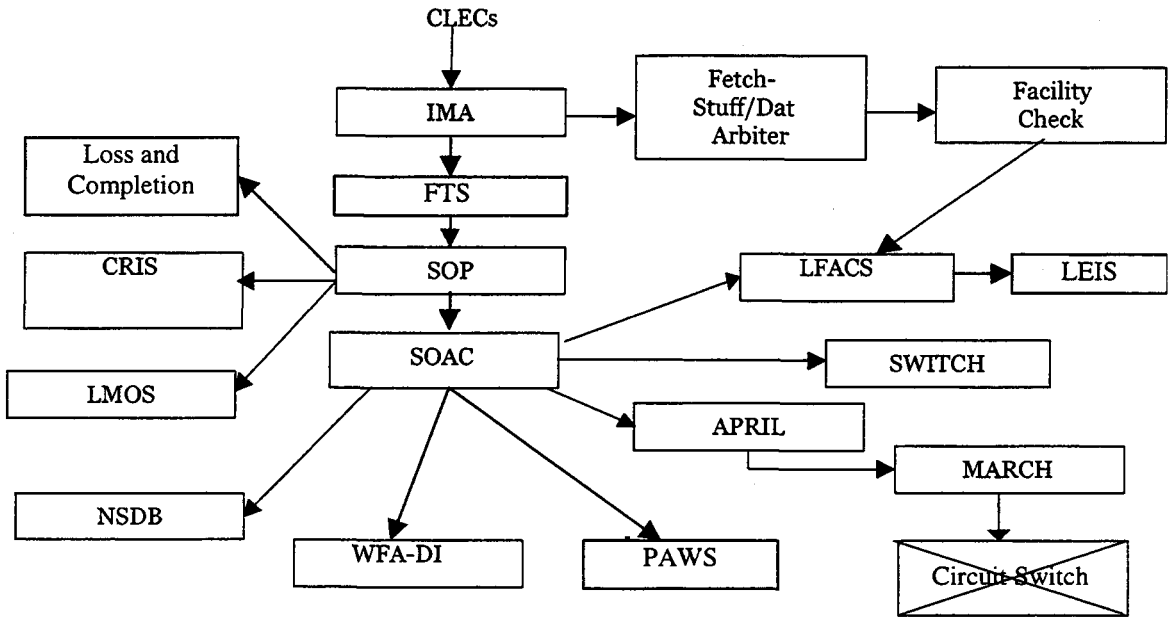

REPAIR

VRU and FESR are collectively the voice response units that contain a script of the repair scenarios that can occur. These scripts allow an end-user to walk through the VRU and through associated button-tone responses by the end-user will direct the customer inquiry to the appropriate repair function.

- To support line sharing, all of the scenarios must first be defined, the scripts coded into the VRU, and the systems modified to react appropriately to the button-tone responses described in the script for the line sharing scenarios.

- Repair for data issues is to be deferred to the Co-Provider, while voice repair remains with Qwest. This is very different from the other resale and unbundled network elements because those records are marked as belonging to one LEC - the Co-Provider. Line sharing results in single records having two owners (Qwest and the Co-Provider). Specialized markings and logic are required to support this condition in the VRU/FESR, LMOS, and NSDB systems.
- Test access must also be considered. The access must allow for voice testing and data testing based on the location of the meet points. The records in LMOS and NSDB must provide this information to the technician so that test access and responsibility is understood.

Line Sharing Repair System Flow

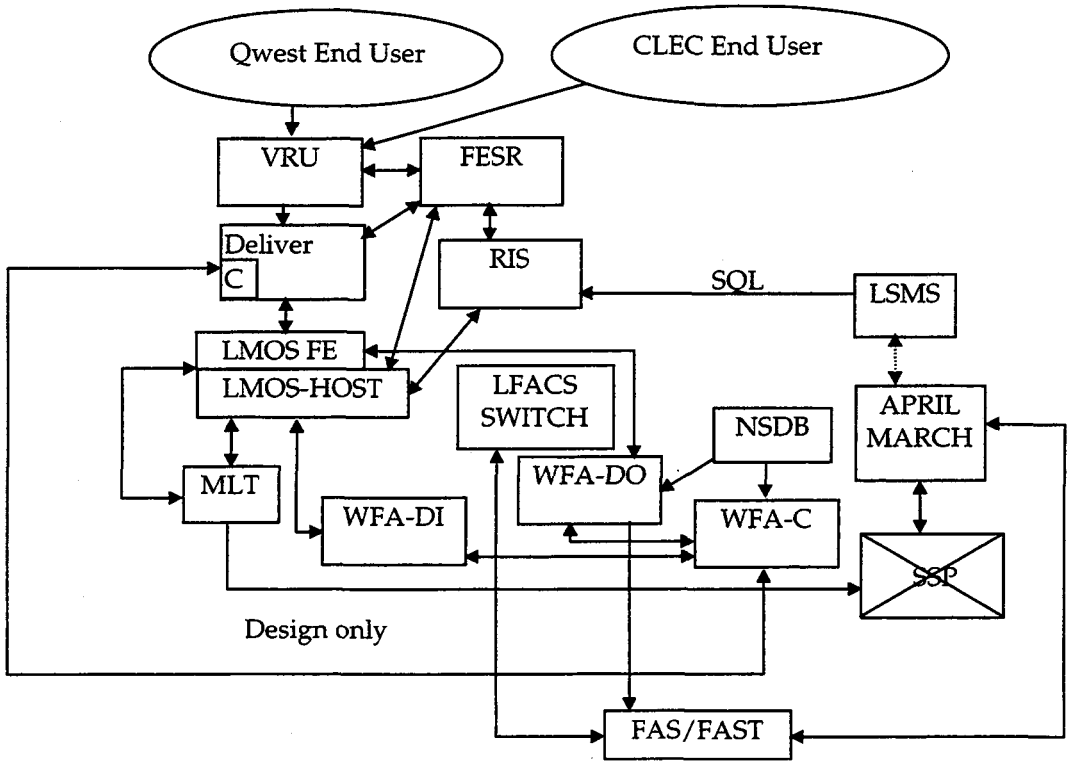

BILLING

CRIS is a billing system for the majority of residence and business account bills for exchange services. It calculates, prints, and mails bills to individual retail end-user customers for retail products, and Co-Providers for some interconnect (wholesale) products. After rating usage, CRIS posts service order processing updates, provisioning information, rating data, tolls, cash treatments, bills, payments, journal entries or adjustments, rate changes, message processing and other billing related information to the CSRs.

- To support line sharing, CRIS must be modified to create/modify two customer service records (CSRs) for one product - line sharing. The end-user's account must be updated to reflect that the line is now shared. A new summary bill for the Co-Provider must be created to establish the relationship to the end-user's telephone number. In addition, CRIS must bill the Co-Provider on a wholesale summary bill for any charges associated with line sharing.

BEFORE THE ARIZONA CORPORATION COMMISSION

IN THE MATTER OF INVESTIGATION INTO QWEST CORPORATION'S COMPLIANCE WITH CERTAIN WHOLESALE PRICING REQUIREMENTS FOR UNBUNDLED NETWORK ELEMENTS AND RESALE DISCOUNTS	)	**DOCKET NO. T-00000A-00-0194**
		AFFIDAVIT OF RENÉE ALBERSHEIM
STATE OF COLORADO	)	
COUNTY OF DENVER	)	

Renée Albersheim, of lawful age being first duly sworn, depose and states:

1. My name is Renée Albersheim. I am Regulatory Manager – Information Technologies of Qwest Corporation in Denver, Colorado. I have caused to be filed written testimony and exhibits in support of Qwest Corporation in Docket No. T-00000A-00-0194.

2. I hereby swear and affirm that my answers contained in the attached testimony to the questions therein propounded are true and correct to the best of my knowledge and belief.

Further affiant sayeth not.

Renée Albersheim

Renée Albersheim

SUBSCRIBED AND SWORN to before me this 12TH day of March, 2001.

Sandra L Lessing

Notary Public residing at
Denver Colorado

My Commission Expires: 6-29-02

BEFORE THE ARIZONA CORPORATION COMMISSION

WILLIAM A. MUNDELL
CHAIRMAN
JIM IRVIN
COMMISSIONER
MARC SPITZER
COMMISSIONER

IN THE MATTER OF INVESTIGATION	)	
INTO QWEST CORPORATION'S	)	
COMPLIANCE WITH CERTAIN	)	**DOCKET NO. T-00000A-00-0194**
WHOLESALE PRICING REQUIREMENTS	)	**PHASE II**
FOR UNBUNDLED NETWORK ELEMENTS	)	
AND RESALE DISCOUNTS	)	

DIRECT TESTIMONY OF

JOSEPH CRAIG

QWEST CORPORATION

MARCH 15, 2001

DIRECT TESTIMONY OF JOSEPH CRAIG
INDEX OF TESTIMONY

IDENTIFICATION OF WITNESS 1

PURPOSE OF TESTIMONY 3

I. INTERNET BOUND CALLS SIMILAR TO LONG DISTANCE CALLS 5

II. INCREASED NETWORK CAPACITY 16

III. MEASURING INTERNET BOUND TRAFFIC 22

IV. DATA NETWORK EFFICIENCIES 25

SUMMARY 30

IDENTIFICATION OF WITNESS

Q. PLEASE STATE YOUR NAME, JOB TITLE AND BUSINESS ADDRESS.

A. My name is Joseph Craig. I am employed by Qwest Corporation ("Qwest") as a Director in the Technical Regulatory Group, Local Network Organization. My business address is 700 W. Mineral, Littleton Colorado, 80120.

Q. PLEASE REVIEW YOUR WORK EXPERIENCE AND PRESENT RESPONSIBILITIES.

A. I have been in the telephone business since 1974. I began as a directory assistance operator for Mountain Bell. After about 2 ½ years in that position, I transferred into Network Operations and since that time have had network-related responsibilities. My introduction to network responsibilities began in the late 1970s when I had responsibility for installing and repairing telephone service. I had responsibility for installations and repairs until 1980 when I became a Central Office Technician assigned to the Denver South Switching and Control Center in Denver, Colorado.

As a Central Office Technician, I was responsible for switch alarm surveillance, switch maintenance and repair, trunk installation, line and routing translations, switch equipment installation and software upgrades. My responsibilities as a Central Office Technician provided me with detailed knowledge of engineering

issues relating to trunking, routing and alarm surveillance in the switching network. I also worked closely with vendor equipment installers and acquired substantial knowledge about switching equipment, switch translations and the overall operation of the switching network.

In 1987, I accepted a three-year rotational assignment to Bellcore's training facility in Chicago, Illinois where I was a Switch Lab Manager. In that position, I was responsible for servicing switching equipment and modifying the equipment to update it with the latest features. My experience at the Bellcore training facility gave me the opportunity to work with switching experts from around the country and to learn about new switching technology and advanced switching repair techniques. I developed expertise in switch repair and recovery techniques, and the operations and functions of Signaling System 7 ("SS7"). While at Bellcore, I was selected for an award for exceptional performance called the Esteemed Member of Bellcore Staff.

In 1990, I returned to U S WEST working in Network Administration where I acquired additional experience in switching capacity and service measurements. After three years, I assumed responsibility for the Switching Control Center, where I managed the technicians who were responsible for monitoring the switching network for all of Colorado. In 1994, I was assigned to the SS7 Control Center, where I had responsibility for provisioning and maintaining the SS7

signaling network for the 14-state U S WEST region.

In 1997, I accepted a position in Network Planning, and became responsible for writing network plans for new switch services in the SS7 network. I also was responsible for monitoring these plans through the implementation phase. In 1998, I was honored as a recipient of President's Club for successfully implementing SS7 into the 911 network for the state of Minnesota.

In June 1999, I accepted a promotion to my current position in Technical Regulatory, Interconnection Planning. In my current position, I provide litigation support before state commissions on issues relating to switching, SS7, trunking, and routing. As of June 30, 2000 I assumed the same job responsibilities for Qwest.

PURPOSE OF TESTIMONY

Q. WHAT IS THE PURPOSE OF YOUR TESTIMONY?

A. The purpose of my testimony is to address several network issues relating to Internet–bound traffic. The issues I address relate to the question of whether Qwest should be required to pay Competitive Local Exchange Carriers ("CLECs") reciprocal compensation for traffic that is bound for Internet Service Providers ("ISPs") when the ISP is served by the CLEC. First, I compare Internet–bound

calls to local and long distance calls and demonstrate that, from a network perspective, Internet–bound calls are similar to long distance calls. This discussion supports testimony from Qwest witnesses Larry Brotherson and Dr. William Taylor that the compensation mechanism for Internet–bound traffic should be modeled after the compensation scheme that applies to long distance calls. This discussion also demonstrates that Internet–bound calls are predominately interstate in nature.

Second, I discuss the effects that Internet–bound traffic is having on Qwest's networks in Arizona and other states. Specifically, the dramatic increase in use of the Internet in the last few years has required Qwest to increase substantially the capacity of its networks by adding, for example, many new trunks and increased switching capacity. For example, Qwest's annual investment in its Arizona network is increasing at a rate almost four times higher than its growth in access lines in Arizona. Usage of the network, measured in minutes of use ("MOU"), is increasing at a rate over twice as high as growth in access lines. These additions to the network will continue into the foreseeable future. My discussion of these issues supports the testimony of Qwest witness Larry Brotherson concerning whether Internet–bound traffic should be subject to reciprocal compensation.

Third, I describe part of the process Qwest relies upon to measure Internet–bound traffic and to distinguish it from voice traffic. In particular, I describe the Call

Records Over Signaling System 7 ("CroSS7") system designed by Agilent, formerly known as Hewlett Packard, that is designed to capture and track all call set-up and traffic flow information for calls using Signaling System Seven ("SS7"). CroSS7 creates and stores call detail records that provide Qwest with hold times for calls. Qwest uses this data from CroSS7 relating to hold times as the starting point of a three-step analysis designed to identify Internet–bound calls.

Fourth, I address some fundamental differences between the networks of CLECs that handle primarily Internet-bound traffic and the networks of Incumbent Local Exchange Carriers ("ILECs") like Qwest that must handle all types of traffic. CLECs that focus on Internet-bound traffic can design their networks to handle this traffic in a more efficient, less costly manner than ILECs that must design their networks to handle a wide variety of traffic.

I. FROM A NETWORK PERSPECTIVE, INTERNET-BOUND CALLS ARE SIMILAR TO LONG DISTANCE CALLS

Q. WHY IS IT APPROPRIATE TO COMPARE INTERNET-BOUND CALLS TO LONG DISTANCE AND LOCAL CALLS?

A. CLEC requests that Qwest pay reciprocal compensation for Internet-bound calls requires an analysis of whether these calls resemble local calls or whether they resemble long distance calls. In support of their requests for reciprocal

compensation for Internet-bound calls, CLECs have contended that these calls are local in nature. This contention is incorrect. Internet-bound calls closely resemble long distance calls. In the discussion that follows, I describe local, long distance, and Internet–bound calls and point out the similarities between long distance and Internet–bound calls.

Q. WHAT IS A LOCAL CALL?

A. A local call is one that originates and terminates within the same Local Calling Area. On average, local calls are brief as compared to other types of calls.

Q. PLEASE DESCRIBE THE NETWORK FUNCTIONS FOR A LOCAL CALL.

A. Calls that originate and terminate within a single local calling area typically involve a one-switch, two-switch or three-switch connection. For the purpose of my testimony, I will discuss the network functions for a local call using a two-switch connection – that is, an originating switch and a terminating switch.

Each customer is electrically connected to a switch for the purpose of sending and receiving calls. When a customer originates a local call, the originating switch interprets the dialed digits and connects the call to the terminating switch over a dedicated route or trunk. This dedicated trunk starts at the originating switch and ends at the terminating switch. If the originating customer and the person the

customer is calling are both Qwest end-users, Qwest will perform the originating and terminating switch functions. In this situation, Qwest also will provide transport between the two switches.

Q. HOW DO THE NETWORK FUNCTIONS DIFFER FOR A LOCAL CALL WHEN THE ORIGINATING CALLER IS A QWEST CUSTOMER AND THE PERSON RECEIVING THE CALL IS A CUSTOMER OF ANOTHER CARRIER?

A. When another carrier is involved, Qwest performs the originating switch function and provides transport of the call over a Local Interconnect Service ("LIS") trunk to the point of interconnection. The CLEC then transports the call from the point of interconnection to its end office switch where it performs the terminating switch function and delivers the call to its end-user. This process works in reverse when a local call originates from a CLEC end-user that is calling a Qwest end-user.

Therefore, in the case of a local call, both the originating and terminating switch know where the call is going and where the call came from, and the call stays on the local network in the local calling area.

Exhibit A, attached to my testimony, illustrates the way a local call is made between two switch providers from a technical perspective. The diagram shows

the progress of a local call. The local call begins with the originating end-user and travels over a dedicated path to the originating switch. The call then travels from the originating switch over a dedicated trunk to a terminating switch. Finally, the local call travels from the terminating switch to a dedicated path that runs to the end-user that is the recipient of the call. In the aggregate, each of these steps gives rise to a dedicated path running from the originating caller to the recipient of the call.

Q. HOW LONG DOES THIS DEDICATED PATH REMAIN IN PLACE?

A. The dedicated voice path between the originating caller and the recipient of the call remains in place for the entire duration of the call. When either the originating or terminating user hangs up, the voice path is released. Call duration is referred to as "hold time" and is recorded as usage, measured as Minutes of Use ("MOU").

Q. PLEASE DESCRIBE A LONG DISTANCE CALL.

A. In contrast to a local call, a long distance or toll call originates in one local calling area and terminates in a different local calling area. These calls are usually longer in duration than local calls.

Q. PLEASE DESCRIBE THE NETWORK FUNCTIONS FOR A LONG DISTANCE CALL.

A. Long distance calls typically involve more than one carrier's network. They are billed by minutes of use, whereas local calls are generally billed through a flat monthly rate that is not affected by the length of calls. Long distance calls are transient in nature, meaning that after they pass through the originating switch, they pass through at least one other switch or switching network before reaching their final destination. In addition, there usually is more distance between the point of origin and the point of destination for a long distance call when compared to a local call.

Long distance calls can be direct connected from the originating switch to the long distance provider's Point of Presence ("POP"), or routed from the originating switch through an access tandem for connecting to the long distance provider's POP. For simplicity, I will use the direct connection architecture in my testimony.

Although the same switch can be used to originate both a local call and a long distance call, the switch in a long distance call does not directly connect the long distance call to its final destination. By contrast, as I discussed earlier, with a local call, the originating switch knows the destination of the call and a dedicated path running directly to the recipient of the call is established. With a long distance call, the originating switch directly connects to an Inter Exchange Carrier

("IXC") to complete the call; it cannot directly connect to the final destination because it does not know that destination. In other words, a long distance call is handed off to another carrier – the IXC – for delivery to its final destination. It is the IXC's switch that knows where the call originated and where it is going to terminate. The terminating switch network receives the call from the IXC and completes the call. Unlike the terminating switch in a local call, the terminating switch in a long distance call does not know where the call originated.

Q. HOW IS A LONG DISTANCE CALL CONNECTED?

A. The originating local exchange provider switches the call and delivers it over a dedicated trunk to the IXC's point of interconnection. The IXC then transports the call to its switch for routing instructions based on the digits that the originating customer dialed. The IXC then transports the call over its network to the point of interconnection with the terminating provider. The IXC hands off the call to the terminating customer's service provider at the point of interconnection. The terminating provider transports the call to its switch, where the call is then switched and routed to the receiving customer. This process is illustrated in Exhibit B, attached to my testimony, which shows a side-by-side comparison of a long distance call and an ISP call.

Q. PLEASE DESCRIBE THE NATURE OF AN INTERNET–BOUND CALL USING THE DIAL-UP METHOD.

A. An Internet–bound call typically is a call that is delivered to the ISP server by a local exchange provider using a modem to modem connection. The ISP takes the call and delivers it over the Internet backbone to a remote hub specified by the Universal Resource Locator ("URL") (e.g., http://www.qwest.com) address that the originating end-user designates.

Q. PLEASE DESCRIBE THE NETWORK FUNCTIONS FOR AN INTERNET-BOUND CALL.

A. A customer of an ISP, an end-user accessing the Internet, is seeking to connect with a site on the Internet. Assuming the use of a local dial-up connection, the end-user connects to its ISP using the public switched telephone network. Dial-up ISP calls use the same switching and transport network as voice calls. The end-user's computer dials the ISP in the same manner as a person dials when making a voice call. The originating end-user's local exchange provider takes the call to the originating serving central office, switches the call and delivers it to the ISP.

Q. WHAT HAPPENS AFTER THE CALL IS DELIVERED TO THE ISP?

A. Upon receiving the call from the serving provider, the ISP connects the call to its server using a modem pool. Modem pools are used to attach many end-users, dialing the same local number, to the same server at the same time and are

available from a pooled resource. Since the modem does not terminate calls, it acts as an interface between the originating user's computer modem and the ISP server.

The end user is then prompted by the ISP to enter the URL of the web site the end-user wants to go to. The ISP then transmits the call over the Internet backbone to the web site that corresponds with the URL address the originating end-user specified.

National ISPs, sometimes called backbone providers, use dedicated lines to connect directly to the Internet backbone at one or more Network Access Points or Metropolitan Area Exchanges. Smaller regional networks and local ISPs, by contrast, obtain trunks from local telephone companies to connect to national ISPs who then connect to the Internet backbone.

Q. DOES THE ROUTING PROCESS FOR INTERNET–BOUND CALLS REQUIRE THE CALLS TO CROSS STATE BOUNDARIES?

A. Yes. As I discussed earlier in my description of Internet–bound calls, upon receiving a call, an ISP must deliver it over the Internet backbone to a remote hub specified by the URL address that the originating end-user designates. The Internet backbone is used to access computer servers that manage the resources on a network and that provide a centralized storage area for software programs and

data, more commonly known as web sites. The remote hubs to which Internet calls are delivered often are located outside the state of the originating user.

The remote hubs – also referred to as Network Access Points and Metropolitan Area Exchange locations – in the continental United States are located in Chicago, New York, Washington D.C., Houston, Dallas, Los Angeles, San Jose and San Francisco. For ISPs in Arizona, the closest remote hub is located in Los Angeles. Accordingly, almost all Internet-bound calls placed by end-users in Arizona cross state lines.

Q. CAN AN END-USER SPECIFY MORE THAN ONE URL?

A. Although only one URL can be specified at a time by the end-user, the URL can be changed as often as the end-user desires on any one call to an ISP. For example, after the end-user connects to their ISP, the first URL may be the web site of a vacation resort. After accessing the resort web site to determine the availability of a room, the end-user can make a reservation using the web page. After obtaining a hotel reservation, the end-user may then change the URL to an airline in order to obtain availability and ultimately make a flight reservation. There is no limit to the number of web sites the end-user can access on a single call to an ISP, and this unlimited access can contribute to the length of Internet calls.

Q. HOW DOES THIS PROCESS WORK WHEN THE ISP IS NOT ON THE NETWORK OF THE LOCAL EXCHANGE PROVIDER THAT PROVIDES DIAL TONE TO THE ORIGINATING END-USER?

A. In this situation, after the originating end-user places a call to its ISP, the local exchange provider that provides the end-user with dial tone switches the call and delivers it over a LIS trunk to the provider on whose network the ISP resides. That provider, whom I will call the ISP serving provider, delivers the call over trunks that the ISP has purchased from the serving provider. Upon receiving the call from the serving provider, the ISP connects the call to its server using a modem pool. The server then transmits the call over the Internet backbone to the web site that corresponds with the URL address the originating end-user specified.

Q. IN YOUR OPINION, IS AN INTERNET–BOUND CALL THAT ORIGINATES ON QWEST'S NETWORK AND IS DELIVERED TO A CLEC FOR DELIVERY TO AN ISP MORE ANALOGOUS TO A LOCAL CALL OR AN INTERSTATE LONG DISTANCE CALL?

A. From a technical perspective, an Internet call is more analogous to a long distance call than it is to a local call for several reasons as shown on the following chart.

	Call Stays in LCA	Originating Carrier has a direct path to the Destination	Call requires 3 Carriers to deliver to Final Destination
Local Call	X	X	
Long Distance Call			X
Internet Call			X

The most significant distinction is that a call to an ISP does not terminate in the same local calling area where the call originated. An Internet call is connected to a modem at the ISP as an interface, and then delivered by the ISP to another location, or web site, specified by the end user in the form of a URL. In other words, the ISP does not terminate the call; rather the ISP is the carrier of the call.

Second, with both long distance calls and Internet-bound calls, the switch of the originating carrier does not know the ultimate destination of the call, and the originating carrier does not deliver the call to its ultimate destination. Instead, for both types of calls, the originating provider delivers the call to another carrier – an IXC or a CLEC serving an ISP – and that carrier must identify the network for which the call is destined and deliver the call to that network. The originating provider does not have a direct path to the final destination of the call and does not know which network the call ultimately reaches.

Third, with a local call, in contrast to long distance and Internet–bound calls, the switch of the originating carrier (Qwest) knows the destination of the call, and the originating carrier (Qwest) has a direct path (LIS trunk) to the final switch (CLEC A). The carrier that originates a local call identifies the destination (CLEC A) of the call and delivers the call to that destination (CLEC A). Unlike long distance and Internet–bound calls, the originating carrier does not hand off a local call for delivery to the final network.

Q. HAVE YOU PROVIDED A DIAGRAM THAT DEMONSTRATES THE SIMILARITIES BETWEEN ISP AND LONG DISTANCE CALLS?

A. Yes. Exhibit B attached to my testimony is a side-by-side depiction of the routing of a long distance call and an Internet–bound call. The diagram shows that for both types of calls, the originating provider delivers the call to an IXC or a CLEC serving an ISP, and the IXC or ISP delivers the call to the network where the call is ultimately terminated.

II. INTERNET–BOUND TRAFFIC REQUIRES QWEST TO SUBSTANTIALLY INCREASE THE CAPACITY OF ITS NETWORK

Q. HAS THE INCREASE IN USE OF THE INTERNET IN RECENT YEARS HAD AN EFFECT ON QWEST'S NETWORK?

A. Yes. The emergence of the Internet as a primary mode of communication in

recent years has presented many engineering challenges for facilities-based providers throughout the country. The use of the Internet has dramatically increased traffic volumes and, as a result, has required providers to substantially increase the capacity in their networks. The additions that Qwest has made to its network in Arizona and in other states in response to Internet–bound traffic have required millions of dollars in capital expenditures and will continue to require substantial, additional expenditures into the foreseeable future. Qwest does not specifically track the amount of its capital expenditures that are related to increases in Internet-bound traffic. Nevertheless, the demands placed on the network from Internet–bound traffic were a significant cause of these increases in capital expenditures.

As set forth in the testimony of Qwest witness Larry Brotherson, Qwest believes that the Commission should consider these capital outlays as part of the overall picture that must be evaluated to develop a fair and appropriate compensation scheme for Internet-bound traffic.

Q. HOW HAS INTERNET–BOUND TRAFFIC LED TO THE NEED FOR QWEST TO AUGMENT ITS ARIZONA NETWORK?

A. Internet–bound traffic has caused substantial increases in network usage, and this increased usage has led to the need for Qwest to increase the capacity of the Arizona network. "Usage" has a specific meaning in the context of

telecommunications networks. It refers to the length of time a call is in place over a period of time. Telephone engineers rely on usage statistics and data to plan and design the network. The amount of anticipated usage indicates the amount of trunking and switching capacity an engineer will include in a network design or plan and, in turn, the amount of capital a company will invest to add to the network.

Q. IS THERE A RELATIONSHIP BETWEEN CALLS THAT HAVE LONGER HOLD TIMES AND INCREASED USAGE IN THE NETWORK?

A. Yes. The longer a call is in place, or held up in the network, the higher the usage will be. Internet-bound calls have significantly longer average hold times than the hold times for local voice calls. It is commonly recognized in the telecommunications industry that the average hold time of a local voice call is about three minutes. Publicly available facts regarding Internet use, such as the Cisco web site attached as Exhibit C, indicate the average hold time of an Internet call is 30 minutes, or ten times longer.

Q. PLEASE EXPLAIN HOW INTERNET CALLS AFFECT USAGE.

A. Because of the longer hold times of Internet calls, this type of traffic has significantly increased network usage. It is common for many Internet users to stay on the Internet for hours at a time. Telephone companies are now

experiencing levels of network usage that are unprecedented because of the dramatic increase in Internet calls and the long hold times that characterize these calls that are placed over the same switching and transport network as voice calls.

To illustrate this, I performed a trend analysis for the Qwest network in the state of Arizona, attached as Exhibit D. This analysis was done based on local minutes of use starting in January of 1993. The trend line from November of 1995, when Internet use started to became a factor, to August of 2000 is much steeper than the trend line from January of 1993 through October of 1995. This shows the dramatic change in the use of the local Arizona network.

To put this into perspective, network investment and local minutes of use (local usage) have increased at a much higher rate than the increase in the number of Qwest Network Access Lines. This is shown on Exhibit E, attached. Since 1996, the number of Qwest access lines in Arizona has increased at an annual average of 5.1%. Prior to the advent of Internet usage, this would have translated into a comparable percentage increase in MOUs also. However, as Exhibit E shows, the average annual increase in MOUs have been 11.8%, over twice the rate of increase in access lines. During the same time period, network investment based on investment in inter-office facilities, outside plant and switches has increased at an annual average rate of 26.8%, nearly five times the increase in access lines.

Q. HOW DOES THE INCREASED USAGE RESULTING FROM INTERNET CALLS AFFECT THE QWEST NETWORK?

A. The increased usage caused by Internet–bound traffic has required Qwest to increase by a large amount the volume of trunks in its network, including in its Arizona network. These trunk additions must be supported by additional switch equipment, switch capacity to switch the load, and additional facility routes. Switch capacity additions are needed because as long as a dedicated path is held up, the switch is performing functions, more commonly referred to as call supervision, to make sure the call stays up until the customer requests a disconnect.

As long as dial-up ISP calls continue to rely on the same switching and transport network that is used for voice calls, increases in Internet–bound traffic will require Qwest to increase the capacity in its networks.

The actual Qwest investment in the Arizona network for Switch, Inter-Office Facilities and Outside Plant from 1996 through 2000 is shown on Exhibit F. This exhibit shows that the level of investment in the Arizona network has continued to increase from 1996 through 2000 even through growth in access lines has slowed during the same period. This increase in investment is attributable at least in part to the growth of Internet-bound traffic on the network. Exhibit F shows that annual capital expenditures for the switch and inter-office facility components of

1 the networks have particularly increased during these five years. These
2 components are the ones most directly affected by increased usage.
3
4 **Q. ARE THE DEMANDS ON QWEST'S NETWORK RESULTING FROM**
5 **INTERNET–BOUND TRAFFIC INCREASED BY COMPETITIVE**
6 **CARRIERS THAT MAINTAIN DATA NETWORKS SEPARATE FROM**
7 **VOICE NETWORKS?**
8 A. Yes. My understanding is that some CLECs intend to use a data network that is
9 separate from their voice network and is dedicated exclusively to carrying data
10 traffic. The use of a separate data network that utilizes data switches indicates
11 that CLECs are anticipating very high volumes of data traffic. These volumes will
12 require Qwest to install in its network large numbers of one-way, dedicated trunks
13 and switch ports at very substantial cost. In addition to these trunks and ports for
14 CLEC data networks, dedicated trunks and switch ports for CLEC voice networks
15 will also be needed. These additions to the network to support CLEC data
16 services, as well as the services provided on its voice network, will require
17 significant capital investment.
18
19 **Q. WHAT WOULD OCCUR IF QWEST DID NOT ADD FACILITIES TO ITS**
20 **NETWORK TO ACCOMMODATE INTERNET–BOUND TRAFFIC?**
21 A. As I explained earlier, regular voice calls and dial-up Internet calls share the same
22 switching and transport network. If Qwest did not add to its network to account

for the increased usage caused by Internet calls, there eventually would not be enough trunks to connect calls. Once a trunk group reaches the maximum amount of usage, measured in centum call seconds ("CCS"), no other calls can be carried on that trunk group. If no trunks are available, call blocking will occur. Since trunk groups are engineered to meet usage requirements, without the capital outlays that Qwest has made in response to the increased usage from Internet–bound traffic, call blocking levels would be substantially higher.

III. QWEST IS ABLE TO MEASURE INTERNET–BOUND TRAFFIC AND TO DISTINGUISH IT FROM VOICE TRAFFIC

Q. DOES QWEST HAVE THE ABILITY TO MEASURE INTERNET-BOUND TRAFFIC AND TO DISTINGUISH IT FROM VOICE TRAFFIC?

A. Yes. As explained in the testimony of Larry Brotherson, Qwest has developed a procedure for identifying Internet–bound traffic and measuring it separately from voice traffic. The procedure consists of three steps. First, Qwest has implemented the CroSS7 system designed by Agilent, formerly known as Hewlett Packard, which is designed to capture and track call set-up and traffic flow information for calls using SS7. Using CroSS7, on a state-specific basis, Qwest captures data relating to calls originated by Qwest customers and delivered to CLEC customers. The data Qwest captures using CroSS7 include the number of calls and the minutes of use per call. Second, to identify modem traffic, Qwest

applies an algorithm to the call detail records stored by CroSS7. As Mr. Brotherson explains in his testimony, the algorithm identifies modem traffic based on call characteristics that are common to Internet calls. Third, after applying the algorithm and identifying the calls that meet the characteristics of modem traffic, Qwest utilizes a modem identifier to determine whether calls initially identified as modem traffic through application of the algorithm are, in fact, modem traffic. Mr. Brotherson also explains this third step in his testimony.

Q. PLEASE DESCRIBE THE CROSS7 SYSTEM THAT QWEST USES TO COLLECT THE CALL DATA THAT ARE USED IN THIS PROCESS.

A. CroSS7, or Call Records Over SS7, is a billing application of AcceSS7 that is used primarily to measure call characteristics for billing purposes. CroSS7 collects and formats call data from the Qwest Signaling System Seven ("SS7") Network that can be used for billing on a usage-sensitive basis and to monitor call activity. The data that CroSS7 compiles, known as call detail records, include the start and end times for calls, which equates to call hold times.

The SS7 Network from which CroSS7 creates call detail records is used in connection with setting up, supervising, and releasing calls. SS7 is an out-of-band network, meaning that it is separate from the network that carries voice calls. The SS7 network links end office switches to Signal Transfer Points ("STPs") for the purpose of transmitting and receiving call-related messages. Through a series of

messages generated from switching equipment, SS7 sets up, supervises, and releases the talk paths or trunks that are used for calls. The first SS7 message, known as the Initial Address Message, occurs when the originator of a call picks up a telephone and dials the digits of a phone number. After the call is connected for conversation and one of the parties to the call hangs up the telephone, SS7 generates a release message that releases the dedicated talk path or trunk that was used for the call. The call detail record that CroSS7 creates for each call includes the amount of time from the initial address message to the release message, which is an accurate measure of the length of each call, or the call hold time.

Q. IS CROSS7 USED BY OTHER COMPANIES IN THE TELECOMMUNICATIONS INDUSTRY?

A. Yes. A review of Hewlett Packard's web site on April 26, 2000 shows that CroSS7 is widely accepted and used in the industry. As shown in the excerpt from the web site, attached as Exhibit H of my testimony, GTE, NYNEX, Bell Atlantic and Ameritech have deployed the Agilent AcceSS7 system in their SS7 networks.

IV. THE EFFICIENCIES OF NETWORKS DESIGNED TO SERVE PRIMARILY INTERNET TRAFFIC

Q. DOES SPECIALIZING IN INTERNET TRAFFIC PERMIT A CARRIER TO DESIGN A NETWORK TO MAXIMIZE EFFICIENCIES AND ECONOMIES IN HANDLING THAT TYPE OF TRAFFIC?

A. Yes. A carrier that handles large amounts of Internet or data traffic can design its network to maximize cost efficiencies associated with that type of traffic.

Q. WHY IS THIS ISSUE RELEVANT TO THE ISSUES THAT ARE BEFORE THIS COMMISSION?

A. This issue is relevant because of CLEC requests that Qwest pay reciprocal compensation for Internet-bound traffic that Qwest delivers to the CLEC. If CLECs are specializing in handling Internet–bound traffic, the costs they incur to handle that traffic likely are less than the costs Qwest incurs, for example, to terminate voice traffic. In addition, the per minute of use cost of Internet–bound traffic usually is lower than the comparable cost associated with voice traffic.

Q. FROM AN ENGINEERING PERSPECTIVE, WHICH TYPE OF NETWORK IS MORE EFFICIENT - A NETWORK THAT SERVES A DIVERSE POPULATION OF RETAIL CUSTOMERS OR A NETWORK THAT SERVES MOSTLY ISPs?

A. A network that serves mostly ISPs is likely to be more efficient from an engineering perspective because the service provider is able to anticipate the load and does not have to build to accommodate variable peaks that are inherent in a diverse network. A network that serves mostly ISPs is built to the needs of the ISP customer only. Also, the needs of most ISPs are similar, while the needs of a diverse customer base are vastly different, and the local exchange provider serving diverse customers will attempt to meet those different needs. This means that the network of the provider with diverse customer needs must be built to serve multiple needs. In meeting the needs of customers with varying requirements, such a diverse network will not offer solutions as efficient as those that may be offered by a single purpose network.

For instance, the voice network is engineered by the average amount of time customers want to use it. If the only service provided is voice service, the voice network will be very efficient because the network knows how voice calls work and knows how different voice services, such as voice mail, work. As the demand for voice services increases, the network is built to meet those demands efficiently. With the introduction of Internet-bound calls on the voice network, however, there is no longer an available forecast of growth or anticipated load, usage, or demand for voice calls alone. This means that efficiency of the voice network must give way to meet the demands of both voice customers and ISP customers whose needs differ greatly.

Q. DOES A CLEC'S USE OF A DATA NETWORK SEPARATE FROM ITS VOICE NETWORK INCREASE THE EFFICIENCY WITH WHICH IT CAN HANDLE INTERNET TRAFFIC?

A. Yes. The use of a network designed specifically to handle data traffic will allow CLECs to handle this traffic with increased efficiency and with minimal costs. Data networks, referred to as packet switched networks, are shared networks that deliver traffic in bursts called packets. The costs of routing traffic over a packet switched network generally are less than the comparable costs in a voice network. As stated in Newton's Telecom Dictionary, "packet switched networks are shared networks, based on the assumption of varying levels of latency and, thereby, yielding a high level of efficiency for digital data networking". Newton's Telecom Dictionary, Volume 15 at 580 (February 1999).

Q. PLEASE CONTRAST HOW DATA NETWORKS AND VOICE NETWORKS ROUTE CALLS.

A. In a packet switched network, data is divided into individual packets, and each packet is assigned the address of the recipient of the call, much like a letter that one drops into a mailbox. Each packet is sent over the network to the recipient of the call, and the packets that comprise one call can take different routes to the recipient. The individual packets arrive at the destination address and are delivered in the proper sequence to the recipient. Significantly, the packet switched network over which these packets travel is a shared network, meaning

that multiple calls traverse the network simultaneously.

In contrast, voice calls are carried over a circuit switched network. This network creates private paths for each call that are dedicated to the user for the entire time of the call. Once a connection is established, the path is used for one purpose and by a single user for the entire length of the call. No other user can use this dedicated path until the first user vacates or disconnects the use of the dedicated path. In other words, unlike the routes in a packet switched network, the routes created in a circuit switched network are dedicated to a user for the length of a call and are not shared. In addition, the circuit network creates direct routes that a call must follow, while the packets in a packet switched network can follow multiple routes.

Q. ARE THERE DIFFERENCES IN COSTS PER CALL BASED ON THE USE OF A PACKET SWITCHED NETWORK OR A CIRCUIT SWITCHED NETWORK?

A. Yes. The use of a packet switched network results in a lower cost structure than the use of a circuit switched network. As I described in my previous answer, packet switched networks handle digital data with a very high level of efficiency. This efficiency leads to lower costs.

Voice calls are less efficient for two reasons. First, for voice calls, the processor

in a circuit switched network must set up a dedicated path for each call. The cost that results from the creation of these paths is traffic-sensitive, meaning that it varies based on the number of calls that are made. Packet switched networks, on the other hand, utilize data switches, referred to as ATM switches, that have minimal set-up functions and associated costs. The difference in set-up functions and costs arises from the fact that a packet switched network does not set up dedicated call paths. This difference in set-up functions contributes to the lower cost structure for data traffic carried over a packet switched network.

Second, data networks utilize digital, one-way trunks that run to the ATM switches. In both a data network and a circuit network, the cost of the facilities that are connected to switches are traffic-sensitive in that they vary based on the minutes of use per trunk group. Because the average data call is substantially longer than the average voice call, the trunks in a data network have a higher utilization rate than the trunks in a voice network. Stated another way, there are more minutes of use per trunk group with data trunks than with trunks in a voice network. Trunks on a data network also have higher utilization rates than trunks on a voice network because during off-peak hours, the amount of data traffic tends to be higher than the amount of voice traffic. These higher utilization rates for data trunks contribute to the lower cost structure of data calls.

Q. ARE THERE ANY OTHER FACTORS THAT LEAD TO LOWER COSTS FOR DATA CALLS THAN FOR VOICE CALLS?

A. Yes. There is at least one additional factor that contributes to the lower cost structure of data calls. Data networks employ a process known as statistical multiplexing that reduces the per unit cost of data calls. The use of an ATM switch involves statistical multiplexing of traffic from a number of various sources. Through this process, a data carrier can place 108 data calls on each DS1 facility that is connected to an ATM switch. By contrast, on a voice network, only 24 calls can be placed on a DS1. This difference in the number of calls that can be placed on a DS1 through statistical multiplexing contributes to the lower cost structure of ISP calls.

SUMMARY

Q. PLEASE SUMMARISE YOUR TESTIMONY.

A. When comparing calls made to an ISP to local and long distance calls, Internet calls are more similar to long distance calls than local calls. Local calls originate and terminate in the same local calling area, even if more than one local provider is involved in the process. Long distance calls are handed off to exchange carriers for call delivery to a separate and sometimes far away network. Exchange carriers provide an interface between local networks and do not terminate calls. Internet calls are handed off to an ISP for call delivery to a separate and sometimes far

1 away network. ISPs provide an interface between networks and do not terminate
2 calls. The result of this comparison concludes that Internet traffic is more similar
3 to long distance calls and is predominately interstate in nature.
4
5 With the dramatic increase in the use of the Internet in the last few years, Qwest
6 has been and will continue to be required to increase substantially the capacity of
7 its networks by adding many new trunks and increased switching capacity to
8 accommodate this demand. These network additions will continue into the
9 foreseeable future.
10
11 Calls made to an ISP can be distinguished from voice calls. Qwest has
12 implemented a process that is designed to capture and track all call set-up and
13 traffic flow information on calls using Signaling System 7. This process generates
14 call detailed records, including call hold times, and is used as a starting point for a
15 three-step analysis designed to identify Internet-bound calls.
16
17 **Q. DOES THIS COMPLETE YOUR TESTIMONY?**
18 A. Yes it does.

BEFORE THE ARIZONA CORPORATION COMMISSION

WILLIAM A. MUNDELL
CHAIRMAN
JIM IRVIN
COMMISSIONER
MARC SPITZER
COMMISSIONER

IN THE MATTER OF INVESTIGATION	)	
INTO QWEST CORPORATION'S	)	
COMPLIANCE WITH CERTAIN	)	**DOCKET NO. T-00000A-00-0194**
WHOLESALE PRICING REQUIREMENTS	)	**PHASE II**
FOR UNBUNDLED NETWORK ELEMENTS	)	
AND RESALE DISCOUNTS	)	

EXHIBITS OF

JOSEPH CRAIG

QWEST CORPORATION

MARCH 15, 2001

EXHIBIT A

LOCAL CALL DIAGRAM

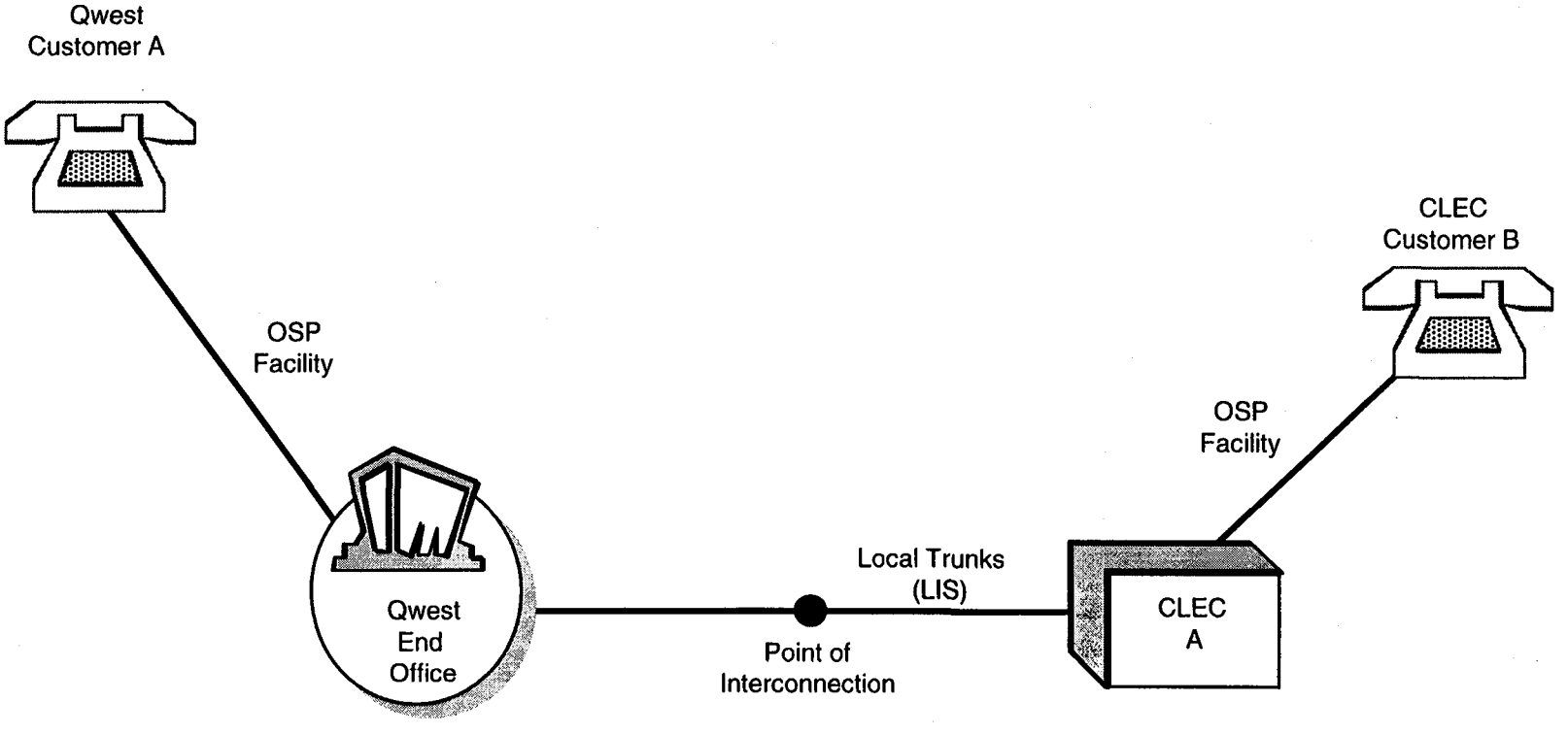

EXHIBIT B

LONG DISTANCE CALL DIAGRAM

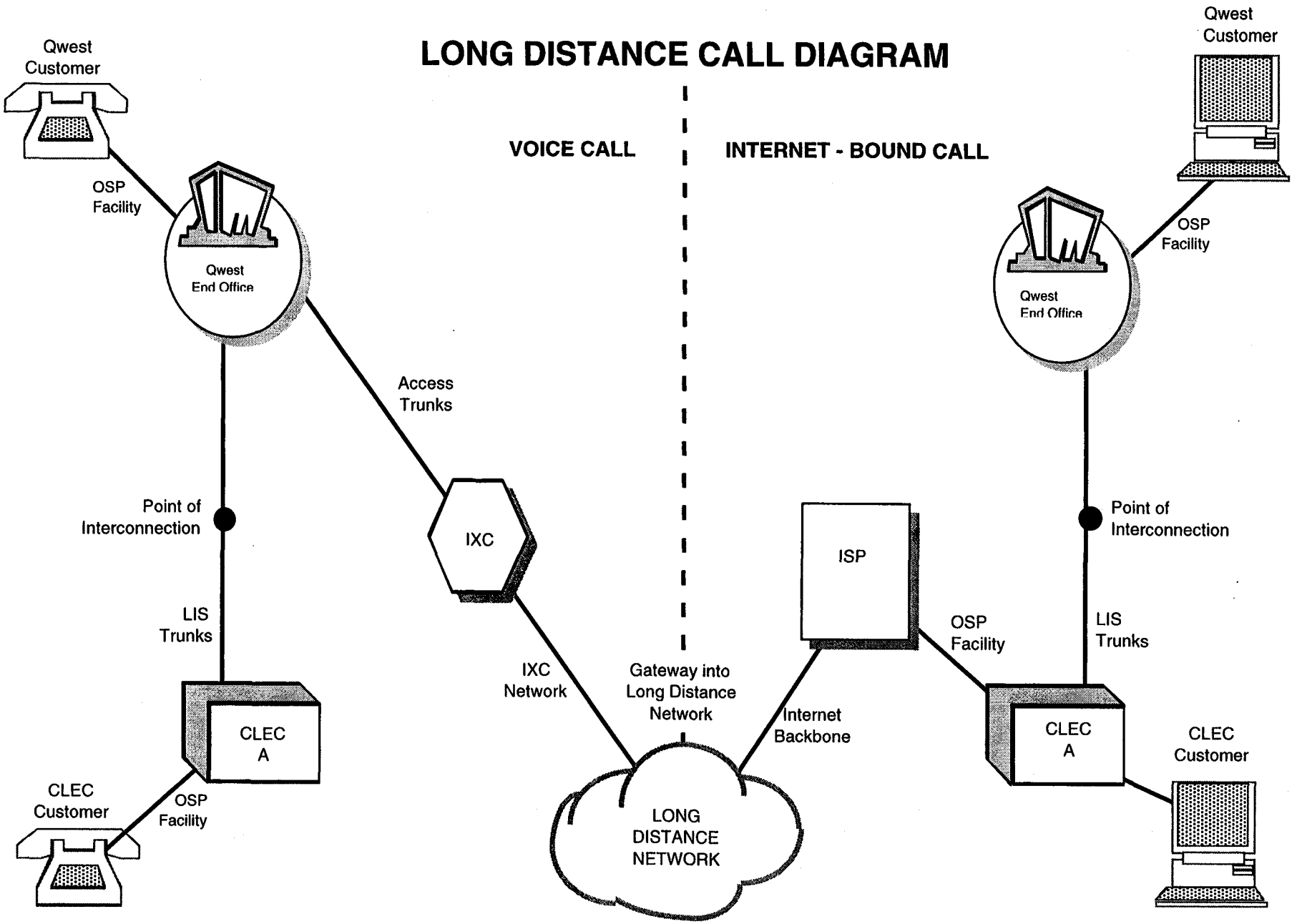

Arizona Corporation Commissior
Docket No. T-00000A-00-019
Qwest Corporatior
Exhibit C of Joseph Craig
Pages 1-3, March 15,200

UNITED STATES

NUMBER OF AMERICANS ONLINE -- HISTORICAL:

- 1993 – 90,000 (U.S. Internet Council, Apr. 1999).
- 1997 – 19 million (Stratis Group, Apr. 1999).
- 1998 – 68 million in 1998. (Strategis Group, Nov. 1999).
- 1998 – 84 million from home or work (Stratis Group, Apr. 1999).
- 1998 – 37 million DAILY (Stratis Group, Apr. 1999).
- 1999, Nov. – 118.4 million (Cyberatlas/Nielsen Net Ratings, Dec. 1999).
- 1999, Nov. – 74 million actually went online (Cyberatlas/Nielsen Net Ratings, Dec. 1999).
- U.S. ONLINE POPULATION -- CURRENT:

ONLINE FIRM AGE USAGE STUDY DATE

134.2 M Nielsen NetRatings 2+ Ever used May 2000

108.0 M Angus Reid Group 18+ Past 30 days Dec. 1999

106.0 M The Strategis Group 18+ Ever used Mar. 2000

104.5 M Jupiter 2+ Past 30 days Dec.1999

101.5 M IDC All Past 30 days Dec. 1999

90.5 M Mediamark Research 18+ Past 30 days Spring 2000

75.8 M Cyber Dialogue 18+ Past 30 days Mar. 2000

- AMERICAN HOUSEHOLDS ONLINE
- 1995 – 14.9 million households (The Strategis Group, Feb. 2000).
- 2000, Jan. – 46.5 million households (The Strategis Group, Feb. 2000).
- 2004 – 90 million by the end of 2004. (The Strategis Group, Feb. 2000).
- PERCENTAGE OF AMERICANS ONLINE:
- 1998 – 28% (IDC, Oct. 1999).
- 1998 – 42% of the U.S. adult population. (Stratis Group, Apr. 1999)
- 2003 – 62% (IDC, Oct. 1999).
- 2003 – 67% (Yankee Group, 1999).
- 2005 – 91% (Strategy Analytics, Dec. 1999).
- NEW USERS Q1 2000: More than 5 million Americans joined the online world in the first quarter of 2000, which averages to roughly 55,000 new users each day, 2,289 new users each hour, or 38 new users each minute. (CyberAtlas / Telecommunications Reports International, May 2000).
- US INTERNET USAGE: Average US Internet user went online 18 sessions, spent a total of 9 hours, 5 minutes and 24 seconds online and visited 10 unique sites per month. (Nielsen NetRatings, June 2000).
- WORK USAGE: On average, the American worker spends 35% of his/her workday on the computer and 23% of his/her workday on the Internet. (Heldrich Center for Workforce Development, Rutgers University, Feb. 2000).

- WORK USAGE: Those with Internet access at work spend 82% of online time on work-related functions. (Heldrich Center for Workforce Development, Rutgers University, Feb. 2000).
- U.S. WIRELESS USERS: 61.5 million Americans will be using wireless devices to access the Internet in 2003, up from 7.4 million in the US today (728% increase). (IDC Research, Feb. 2000).
- MOBILE DATA: Almost 80% of the US Internet population will access data from mobile phones in a year's time, up from the current figure of 3%. (Corechange, Inc & Cap Gemini USA, Apr. 2000).
- E-MAIL 1998: The U.S. Postal Service delivered 101 billion pieces of paper mail in 1998. Estimates for e-mail messages sent in 1998 range from 618 billion to 4 trillion. (U.S. Internet Council, Apr. 1999).
- E-MAIL 1999: There are 270 million e-mailboxes in the U.S. -- roughly 2.5 per user. (eMarketer/ Messaging Online, Nov. 1999).

- U.S. INTERNET ADOPTION AMONG PC USERS: 81% of computer users go online, a 54% increase over 3 years ago. (eMarketer / Harris Interactive, Feb. 2000).
- EMAIL: Number of electronic mailboxes worldwide jumped 84% to almost 570 million in 1999, and should reach 1 billion by the end of 2001. (Messaging Online, Apr. 2000).
- TIME ONLINE, LIFETIME: Analysts forecast that netizens will spend 5.3 % of their lives on the Internet. (CyberDialogue, April 2000).

COMPUTER PENETRATION (AEA's CyberNation 2.0, April 2000):

- USA -- 159 million computers
- EU -- 135 million
- APAC -- 116 million in all of Asia-Pacific.
- CORPORATE EMAILS: In 2004, companies will send more than 200 billion e-mails. (Forrester Research, February 2000).
- DOWNLOAD SPEEDS IMPROVING: Average homepage took 4.73 seconds to download by the end of 1999, 27% faster than at the beginning of the year (6.49 seconds). (Keynote Systems, April 2000).
- NEW WEB PAGES: On average, more than 3 million Web pages were created every day in 1999. (IDC, Apr. 2000).
- WEB HITS/DAY 1999: U.S. web pages averaged one billion hits per day (aggregate) in October 1999. (eMarketer/Media Metrix, Nov. 1999).
- INCREASING CORPORATE USE OF NET: Commercial use of the Net by firms and organizations is doubling every year (The Delphi Group, Oct. 1999).

- HOURS ONLINE (Veronis, Suhler & Associates, Nov. 1999):
- 1997 – 28 hours per capita
- 1998 – 74 hours per capita
- 2003 – 192 hours per capita
- HOURS ONLINE: Americans watch an average of 1,610 hours per year of TV and listen to 992 hours of radio, compared with 1999 Internet usage predictions of from 74 hours per capita in 1998. (Veronis, Suhler & Associates, Nov. 1999).

HOW LONG TO REACH 30% PENETRATION? (U.S. Internet Council, Apr. 1999).

- Internet -- 7 years
- Television – 17 years
- Telephone – 38 years
- Electricity – 46 years.
- PENETRATION, CITIES: Five U.S. cities have reached 50% Internet penetration among their adult populations, including Washington DC, San Francisco, Austin, TX, Seattle/Tacoma, and Salt Lake City. (Scarborough Research, Oct. 1999).
- FREE ISPs: Free ISPs will be used by 13 million U.S. households by 2003 (13% of total online market), including by 8.8 million as primary Internet access. (Jupiter Communications, Dec. 1999).
- BUSINESS v. PERSONAL USERS: 54% of active U.S. Internet users are business users versus 46% who access the Web mainly for personal reasons. (eMarketer, 1999).

EXHIBIT D

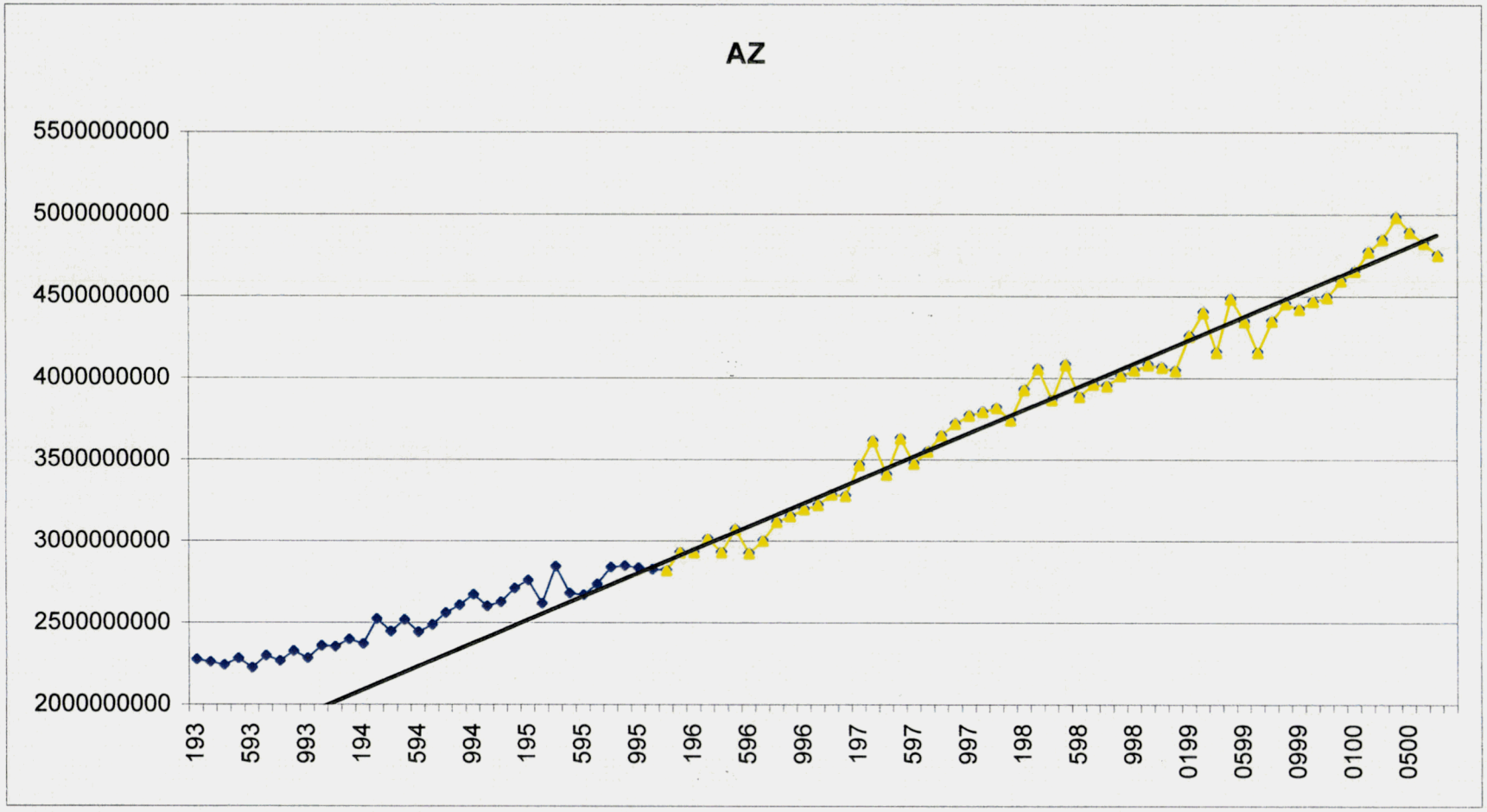
AZ
5500000000
5000000000
4500000000
4000000000
3500000000
3000000000
2500000000
2000000000
193
593
993
194
594
994
195
595
995
196
596
996
197
597
997
198
598
998
0199
0599
0999
0100
0500

REDACTED

Arizona Corporation Commission
Docket No. T-00000A-00-0194
Qwest Corportion
Direct Testimony of Joseph Craig
Exhibit JPC-6
March 15, 2001

REDACTED

Arizona Corporation Commission
Docket No. T-00000A-00-0194
Qwest Corporation
Exhibit G of Joseph Craig
Pages 1-5, March 15,2001

HP.com Home | HP Products | HP Services & Support | Buy HP

Welcome to HP

United States

SEARCH
ASSISTANCE
Company Information
Agilent Technologies
Jobs at HP
Investor Information

Drivers

HP Store

Find a Reseller

Select Another Country

United States GO

Solutions for:

- E-services
- Home & Home Office
- Small Business
- Developers
- Government

Highlights

- HP Increases Computing Mobility with New HP OmniBook 6000 Notebook PC
- HP Board Sets Record Date and Distribution Date for Agilent Stock Dividend
- More Highlights...

Founding sponsor of

Privacy Statement Use of this site indicates you accept the Terms of Use. © 1994-2000 Hewlett-Packard Company

Search

SEARCH ASSISTANCE

Start new search Search these results

Search:

access7

Submit Help Advanced Search 10 Hits per page

Tip: You can type in your query using plain language instead of just using keywords.
Example: Where do I download software drivers?

Results for: access7 Document count: access7 (313)

274 result(s), Top 100 sorted by relevance sort by date | hide summaries 1-10

HP Test & Measurement: HP ACCESS7 SYSTEM INSTALLED BY GTE TO MANAGE INTERCONNECTION AND TO ...
HP announces that GTE Network Services has deployed an HP acceSS7 system to analyze and manage network traffic with other telecom companies and to detect fraud on ...
http://www.tm.agilent.com/tmo/press/English/PRTME600805.html - size 24.3K
64% 28 May 99 Find Similar

HP Test & Measurement: HP'S ACCESS7 SYSTEM SELECTED BY NYNEX
Hewlett-Packard Company today announces that it has signed a deal with NYNEX Corporation to supply the acceSS7 network monitoring system.
http://www.tm.agilent.com/tmo/press/English/PRTME600701.html - size 23.0K
62% 28 May 99 Find Similar

HP Test & Measurement: AMERITECH INSTALLS HP ACCESS7 SYSTEM TO ENSURE SMOOTH DEPLOYMENT OF ...
HP announces that Ameritech Corporation has selected the HP acceSS7 system to centralize network operations, expedite network maintenance and management, and ...
http://www.tm.agilent.com/tmo/press/English/PRTME600811.html - size 23.0K
62% 28 May 99 Find Similar

Test & Measurement: Agilent acceSS7 Network Monitoring System
Agilent acceSS7 is a distributed system that collects and analyzes messages from the SS7 links in a network.
http://www.tm.agilent.com/tmo/datasheets/English/acceSS7.html - size 30.5K
62% 14 Jan 00 Find Similar

HP LaserJet 5 Family Printers - Windows 95/98 and Access 7.0, Cannot Print Objects
Windows95
http://www.hp.com/cgi-bin/cposupport/cspt/ljxxxx/dyndocwrap.pl?lid=general&fid=bpl04034&pid= - size 18.4K
61% 21 Apr 00 Find Similar

Agilent acceSS7 Network Monitoring System 60% 31 Mar 00 Find Similar

http://www.tm.agilent.com/tmo/HPacceSS/ - size 19.6K

HP Test & Measurement: HP'S ACCESS7 SYSTEM TO MONITOR "NERVOUS SYSTEM" OF SWISS TELECOM'S ... 60% 28 May 99 Find Similar

HP announces it has signed a $3.2 million (CHF 4.1 million) deal with Swiss Telecom PTT to supply the government-owned company with its acceSS7 network monitoring ...

http://www.tm.agilent.com/tmo/press/English/PRTM1400611.html - size 22.7K

HP Test & Measurement: HP INTRODUCES ACCESS7 BUSINESS-INTELLIGENCE SOLUTION TO HELP NETWORK ... 60% 28 May 99 Find Similar

HP announces the HP acceSS7 business-intelligence solution.

http://www.tm.agilent.com/tmo/press/English/PRTME600808.html - size 24.5K

HP Test & Measurement: HP'S ACCESS7 BUSINESS-INTELLIGENCE SOLUTION DEPLOYED BY BELL ATLANTIC 60% 28 May 99 Find Similar

HP announces that Bell Atlantic, a leading communications service provider in the United States, is one of the first companies to deploy the recently announced HP acceSS7.

http://www.tm.agilent.com/tmo/press/English/PRTME600807.html - size 24.3K

Test & Measurement: HP INTRODUCES ACCESS7 BUSINESS-INTELLIGENCE APPLICATIONS TO HELP ... 60% 29 Jun 99 Find Similar

HP introduces two HP acceSS7 business-intelligence applications.

http://www.tm.agilent.com/tmo/press/English/PRTME600904.html - size 25.2K

---

274 result(s) found, **sorted by relevance** sort by date | hide summaries 1-10

Privacy Statement Use of this site indicates you accept the Terms of Use © 1994-2000 Hewlett-Packard Company

Product Information

Agilent acceSS7 Network Monitoring System

Summary

Agilent acceSS7 Network Monitoring System

Agilent acceSS7 is a distributed system that collects and analyzes messages from the SS7 links in a network. It is switch-independent, providing a comprehensive, impartial view of what is happening on the network, even during fault conditions.

For complete information about acceSS7 visit our website at www.acceSS7.com

Agilent acceSS7 is widely accepted as the standard for SS7-based telecom network monitoring and data-mining. It now dominates the world market. The installed customer base for Agilent acceSS7 has increased to more than 60 companies in five continents, and includes many of the most successful network operators. It covers both large and small networks, wireless and wireline deployments. Over the years we have built up an excellent relationship with our customers, working with them to sharpen our understanding of the telecom network operators' business objectives.

Agilent acceSS7 - Gives you the Data you need

Agilent acceSS7 uses specially designed hardware to monitor SS7 links at selected nodes in your network, typically STPs or transit exchanges. The monitoring sites are interconnected, via a WAN, to a central server

Product Details

Key Specifications

Additional Information

Check here for related product, application, and support information for this product.

acceSS7 Products & Applications

acceSS7 Technical Support

How To Buy

Ordering Information

Find your local contact to purchase this product.

Country Name

Go

Notify Me

You can change your profile to denote your interest in this product and ensure you receive news of future products enhancements or promotions.

Notify Me

which configures and co-ordinates the activities of all sites. Users interact with the system by means of workstations connected to the central server.

Features

Agilent acceSS7 brings many benefits to your organization:

- Centralized network maintenance
- Monitoring all parts of the network in real-time
- Reduced time and labour for implementing new services
- Optimizing current network infrastructure
- Detecting Fraud as it happens
- Negotiating and supporting more effective interconnect agreements

Agilent Technologies is a subsidiary of Hewlett-Packard Company

Privacy Statement Use of this site indicates you accept the Terms of Use © 1994-2000 Agilent Technologies

BEFORE THE ARIZONA CORPORATION COMMISSION

WILLIAM A. MUNDELL
CHAIRMAN
JIM IRVIN
COMMISSIONER
MARC SPITZER
COMMISSIONER

IN THE MATTER OF INVESTIGATION INTO QWEST CORPORATION'S COMPLIANCE WITH CERTAIN WHOLESALE PRICING REQUIREMENTS FOR UNBUNDLED NETWORK ELEMENTS AND RESALE DISCOUNTS	)	**DOCKET NO. T-00000A-00-0194**
		AFFIDAVIT OF JOSEPH P. CRAIG
STATE OF COLORADO	)	
COUNTY OF ARAPAHOE	)	

Joseph P. Craig, of lawful age being first duly sworn, deposes and states:

1. My name is Joseph P. Craig. I am Director – Technical Regulatory for Qwest Corporation in Littleton, Colorado. I have caused to be filed written testimony and exhibits in support of Qwest Corporation in Docket No. T-00000A-00-0194.

2. I hereby swear and affirm that my answers contained in the attached testimony to the questions therein propounded are true and correct to the best of my knowledge and belief.

Further affiant sayeth not.

Joseph P. Craig

Joseph P. Craig

SUBSCRIBED AND SWORN to before me this 12th day of March, 2001.

Patricia M. Cooper

Notary Public residing at
Denver, Colorado

My Commission Expires: 4-5-04

PATRICIA M. COOPER
STATE OF COLORADO
NOTARY PUBLIC

BEFORE THE ARIZONA CORPORATION COMMISSION

WILLIAM A MUNDELL
CHAIRMAN
JIM IRVIN
COMMISSIONER
MARC SPITZER
COMMISSIONER

IN THE MATTER OF INVESTIGATION INTO QWEST CORPORATION'S COMPLIANCE WITH CERTAIN WHOLESALE PRICING REQUIREMENTS FOR UNBUNDLED NETWORK ELEMENTS AND RESALE DISCOUNTS.	]	**DOCKET NO. T-00000A-00-0194** **Phase II**

DIRECT TESTIMONY OF

BARBARA J. BROHL

ON BEHALF OF

QWEST CORPORATION

March 15, 2000

TESTIMONY INDEX

I. EXECUTIVE SUMMARY 1

II. IDENTIFICATION OF WITNESS 2

III. PURPOSE OF TESTIMONY 3

IV. UNBUNDLED NETWORK ELEMENTS 4

A. LINE SHARING 4

B. SHARED INTEROFFICE TRANSPORT 8

C. UNBUNDLED CUSTOMER CONTROLLED REARRANGEMENT (UCCRE) 9

D. LOCAL TANDEM SWITCHING 9

E. LOCAL SWITCHING 11

1. Line Side Ports 11

2. Vertical Features 12

3. Trunk Ports 13

F. CUSTOMIZED ROUTING 14

G. ACCESS TO SIGNALING COMMON CHANNEL SIGNALING/SIGNALING SYSTEM 7 (CCSAC/SS7) 16

H. ADVANCED INTELLIGENT NETWORK (AIN) 18

I. LINE INFORMATION DATA BASE (LIDB) 20

J. 8XX DATA BASE 23

K. INTERNETWORK CALLING NAME (ICNAM) 24

L. UNE COMBINATIONS 25

M. DAILY USAGE RECORD FILE 26

V. CONCLUSION 27

I. EXECUTIVE SUMMARY

The purpose of my testimony is to present Qwest's product descriptions and pricing for the unbundled network elements (UNEs) and combinations listed below. The prices established for these unbundled elements will be set in this portion of the proceeding based on cost. The TELRIC cost of each element is presented in the testimony of Teresa K. Million. For Unbundled Network Elements (UNEs), the price that Qwest is proposing is the TELRIC cost for the element. The pricing methodology is consistent with the Telecommunications Act, with FCC orders and with Arizona Corporation Commission Rules. I respectfully request this commission to approve the pricing proposed in this docket.

- Line Sharing
- Shared Interoffice Transport
- Unbundled Customer Controlled Rearrangement (UCCRE)
- Local Tandem Switching
- Local Switching
- Customized Routing
- Advanced Intelligent Network (AIN)
- Line Information Data Base (LIDB)
- 8XX Data Base
- Internetwork Calling Name (ICNAM)

- Unbundled Network Element Combinations UNE-C

II. IDENTIFICATION OF WITNESS

Q. PLEASE STATE YOUR NAME AND BUSINESS ADDRESS AND POSITION WITH QWEST CORPORATION.

A. My name is Barbara J. Brohl, I am employed by Qwest Corporation (Qwest), f/k/a U S WEST Communications, Inc. as a Director of Wholesale Advocacy in the Wholesale Markets organization. My business address is 1801 California St, Room 2410, Denver, Colorado 80202.

Q. PLEASE DESCRIBE YOUR WORK EXPERIENCE AND EDUCATION.

A. Currently, my responsibilities include identifying and managing regulatory issues surrounding service performance, wholesale processes, and wholesale products, as a result of the Telecommunications Act of 1996, FCC orders, state commission decisions, and other legal and regulatory matters. I am responsible for testifying before federal and state regulatory bodies in arbitration cases, rulemakings and complaint proceedings, and in courts concerning conformance with state and federal telecommunications laws and regulations. Prior to my current assignment, I was responsible for developing advocacy and testifying before state and federal regulatory bodies on issues surrounding Qwest's operational support systems (OSS). Before that, I managed the Information Technologies department's compliance with the restrictions of the Modification of Final Judgment and

1 the requirements of Open Network Architecture. During that time, I became certified by
2 the Institute for Certification of Computing Professionals (ICCP) as a Certified Computing
3 Professional (CCP), and then received a Bachelor of Science degree in Business /
4 Computer Science from Regis University in 1991. In 1995, I received a Juris Doctorate
5 degree from the University of Denver, School of Law. I then left U S WEST, now Qwest,
6 for approximately two years to work as a judicial law clerk for the Colorado Supreme
7 Court. Since my return, my work has focused on providing regulatory support to the
8 Wholesale Markets organization.

9 **III. PURPOSE OF TESTIMONY**

10 **Q. WHAT IS THE PURPOSE OF YOUR TESTIMONY?**

11 A. The purpose of my testimony is to describe certain Qwest unbundled network elements
12 (UNEs) and combinations, along with their pricing elements, which include recurring and
13 non-recurring charges as appropriate. Prices associated with each UNE and combination
14 addressed in my testimony are included in Exhibit A, which is attached to the testimony of
15 Maureen Arnold. Specifically, I will describe the following UNEs:

- Line Sharing
- Shared Interoffice Transport
- Unbundled Customer Controlled Rearrangement (UCCRE)
- Local Tandem Switching
- Local Switching
- Customized Routing
- Common Channel Signaling / SS7
- Advanced Intelligent Network (AIN)
- Line Information Database (LIDB) Query Service
- 8XX Database Query Service
- Internetwork Calling Name (ICNAM) Query Service
- Unbundled Network Element Combinations (UNE-C) (all but EEL – Enhance Extended Link, which is addressed by Robert Kennedy.)

Q. ARE OTHER QWEST WITNESSES' PROVIDING TESTIMONY REGARDING UNES?

A. Yes. Robert F. Kennedy will address Unbundled Loops, Unbundled Network Element Combinations UNE-C Enhanced Extended Loops (EELs), Subloops, Unbundled Dedicated Interoffice Transport (UDIT), as well as other UNEs. Included in the Qwest testimony of Maureen Arnold is an Exhibit A that includes the list of products and services in this docket, and the Qwest witness assigned.

IV. UNBUNDLED NETWORK ELEMENTS

A. LINE SHARING

Q. PLEASE DESCRIBE LINE SHARING.

A. Line Sharing provides CLECs with the opportunity to offer advanced data services simultaneously with an existing end user's analog voice-grade (POTS) service provided by Qwest on a single copper loop referred to herein as the "Shared Loop" or "Line Sharing", by using the frequency range above the voice band on the copper loop. This frequency range will be referred to herein as the High Frequency Spectrum Unbundled Network Element ("HUNE"). A POTS splitter separates the voice and data traffic and allows the copper loop to be used for simultaneous data transmission and POTS service. Qwest must provide the POTS service to the end user. Qwest will provide CLECs with access to the HUNE through POTS splitters installed in Qwest wire centers. At the discretion of the CLEC, the POTS splitters can be installed either in the CLEC's collocation area or in the common area. A discussion of the line sharing equipment, splitter areas and associated engineering is included in the testimony of Qwest technical witness James C. Overton.

Q. WHAT RECURRING CHARGES APPLY TO LINE SHARING?

A. The recurring charges for line sharing include:

- Shared loop – per loop
- OSS, per order
- Splitter Shelf
- Splitter Tie Cable Options
    1. Common Area Splitter
    2. IDF

3. MDF

The recurring charges are listed in Exhibit A. Qwest witness, William Fitzsimmons will address the shared loop recurring charge. Qwest witness, Teresa K. Million will address the OSS per-line charge. Qwest technical witness, James C. Overton will discuss the technical aspects of line sharing such as; engineering, reclassification, and splitter areas.

Q. WHAT NON-RECURRING CHARGES APPLY TO LINE SHARING?

- A. The non-recurring charges for line sharing include:
- Reclassification charge
- Splitter Shelf
- Splitter Tie Cable Options
    1. Common Area
    2. IDF
    3. MDF
- Engineering
- Basic Installation

The non-recurring charges are listed in Exhibit A.

Q. ARE THERE OTHER NONRECURRING CHARGES THAT MAY BE APPLICABLE TO LINE SHARING?

1 A. Yes. Other nonrecurring rates that may be applicable to line sharing are as follows:
2 conditioning, additional testing and trouble isolation charges (TIC). However, they are not
3 specific to line sharing. Each of these stand-alone items is discussed in the testimony of
4 Qwest witness, Robert F. Kennedy.

5 **Q. WHO PROVIDES THE SPLITTER?**

6 A. The CLEC provides the splitter. When the splitter is located in a common area (whether on
7 the splitter bay, the IDF, or the MDF), the CLEC will provide the splitter at no cost to
8 Qwest.

9 **Q. DO THE CLECS/DLECS HAVE OPTIONS FOR PLACEMENT OF POTS**
10 **SPLITTERS WITHIN THE QWEST CENTRAL OFFICE?**

11 A. Yes. There are generally three alternatives: placement of the splitter in a Qwest common
12 area, placement of a splitter on an IDF or MDF, and placement of the splitter with a
13 CLEC/DLEC collocation area.

14 **Q. DO BOTH POTS SPLITTER LOCATION OPTIONS HAVE RECURRING AND**
15 **NON-RECURRING CHARGES?**

16 A. Yes. All of the options have unique costs that include recurring and non-recurring charges.
17 However, when the CLEC/DLEC chooses the option of placing its splitter in its collocation
18 area, there are charges that are not specific to line sharing, e.g., use of one of its existing
19 terminations for the return of the voice, and re-stenciling of that termination. These
20 charges apply whenever that activity takes place for any reason, they are not specific to line

1 sharing. The testimony of James C. Overton describes each option's network structure. The
2 rates for each option are listed in Exhibit A.

3 **B. SHARED INTEROFFICE TRANSPORT**

4 **Q. PLEASE DESCRIBE SHARED INTEROFFICE TRANSPORT.**

5 A. Shared Interoffice Transport is defined as interoffice transmission facilities shared by more
6 than one carrier, including Qwest, between Qwest end offices and tandem switches within
7 a local calling area.

8 Shared Interoffice Transport is only provided in two cases: when a CLEC purchases
9 Unbundled Local Switch Ports or when it purchases the Unbundled Network Element-
10 Platform (UNE-P). The existing routing tables that reside in the switch will direct both
11 Qwest and CLEC traffic over Qwest's interoffice message trunk network. CLECs use the
12 same routing tables and interoffice message trunk network to deliver an end user call from
13 one central office to another. Therefore, existing routing tables are not a separate network
14 element.

15 **Q. WHY IS SHARED INTEROFFICE TRANSPORT ONLY AVAILABLE TO CLECS**
16 **THAT PURCHASE UNBUNDLED SWITCHING?**

17 A. Shared Interoffice Transport is offered in combination with unbundled switching because
18 Qwest permits a CLEC to use the same routing tables that reside in the Qwest switch, as
19 well as, the same interoffice facilities that carry Qwest's traffic.

Q. WHAT CHARGES APPLY TO SHARED INTEROFFICE TRANSPORT SERVICE?

A. Shared Interoffice Transport is billed on a per-minute-of-use basis in accordance with the rates described in Exhibit A.

C. UNBUNDLED CUSTOMER CONTROLLED REARRANGEMENT (UCCRE)

Q. PLEASE DECRIBE UCCRE.

A. Unbundled Customer Controlled Rearrangement Element (UCCRE) provides the means by which a CLEC controls the configuration of unbundled network elements (UNEs) or ancillary services on a near real time basis through a digital cross connect device. UCCRE utilizes the Digital Cross-Connect System (DCS). UCCRE is available in Qwest wire centers that contain a DCS that is UCCRE-compatible.

Q. DOES QWEST PROPOSE BOTH RECURRING AND NONRECURRING RATES FOR UCCRE?

A. While the product does have recurring and nonrecurring rates, they are not standardized. The charges that apply to UCCRE are based on the number of ports used for each DS1, DS3, or Virtual (end-user to end-user) Port ordered by the CLEC. As a result, the charges are determined on an individual case basis (ICB) as shown in Exhibit A.

D. LOCAL TANDEM SWITCHING

Q. PLEASE DESCRIBE LOCAL TANDEM SWITCHING.

A. The local tandem switching element includes the facilities connecting the trunk distribution frames to the tandem switch and all functions of the switch itself, including those facilities that establish a temporary transmission path between two other switches. The local tandem switching elements also include the functions that are centralized in local tandem switches rather than end office switches, such as, call recording, the routing of calls to operator services, and signaling conversion features. Local Tandem Switching is available pursuant to FCC rules.

Q. WHAT RECURRING CHARGES APPLY TO LOCAL TANDEM SWITCHING?

A. Use of local tandem switching is billed on an originating per minute of use basis. Please see Exhibit A for the rate.

Q. WHAT NONRECURRING CHARGES APPLY TO LOCAL TANDEM SWITCHING?

A. A DS1 Trunk Port is a 4-wire DS1 trunk side switch port terminating at a DS1 demarcation point and incurs a non-recurring charge. Each DS1 Tandem Trunk Port includes a subset of 24 DS0 channels capable of supporting local message type traffic and incurs a non-recurring charge to establish both the first and each additional trunk group member.

Please see Exhibit A for the rate.

E. LOCAL SWITCHING

Q. PLEASE DESCRIBE LOCAL SWITCHING.

A. Access to unbundled switching encompasses line-side and trunk-side facilities, plus the features, functions and capabilities of the switch. The features, functions, and capabilities of the switch include the basic switching function, as well as the same basic capabilities that are available to Qwest's end-user customers. Unbundled local switching also includes access to all vertical features that the switch is capable of providing, as well as any technically feasible customized routing functions. Local Switching is available pursuant to FCC rules.

1. Line Side Ports

Q. PLEASE DESCRIBE A LINE SIDE PORT.

A. The analog line port is a two -wire interface on the line-side of the end office switch that is extended to the Main Distribution Frame (MDF). The analog line port enables a CLEC to access vertical features.

Q. DOES QWEST PROPOSE A RECURRING CHARGE FOR AN ANALOG LINE SIDE PORT?

A. Yes. The recurring rates for the first analog line port and each additional analog line port are included in Exhibit A.

Q. DOES QWEST PROPOSE A NONRECCURING RATE FOR THE ANALOG LINE SIDE PORT?

A. Yes. Qwest proposes a nonrecurring rate for the first analog line side port and each additional analog line side port as listed in Exhibit A.

Q. PLEASE DESCRIBE A DIGITAL LINE PORT (SUPPORTING BRI ISDN).

A. Basic Rate Interface Integrated Services Digital Network (BRI-ISDN) is a digital architecture that provides integrated voice and data capability (2-wire). A BRI ISDN Port is a Digital 2B+D (2 Bearer Channels for voice or data and 1 Delta Channel for signaling and D Channel Packet) line-side switch connection with BRI ISDN voice and data basic elements. A BRI ISDN Port does not offer B Channel Packet service capabilities.

Q. DOES QWEST PROPOSE A RECURRING RATE FOR A DIGITAL LINE PORT?

A. Yes. The recurring rate is listed in Exhibit A.

Q. DOES QWEST PROPOSE NONRECURRING CHARGES FOR A DIGITAL LINE-SIDE PORT?

A. Yes. Qwest proposes nonrecurring charges for the first port and each additional port. The nonrecurring charges are included in Exhibit A.

2. Vertical Features

Q. PLEASE DESCRIBE VERTICAL FEATURES.

A. Vertical features are software attributes on end office switches.

Q. IS QWEST PROPOSING VERTICAL FEATURES IN THIS DOCKET

1 A. Yes. Qwest is proposing a list of vertical features on an individual basis. A CLEC may
2 purchase access to all vertical features that are available and activated in a Qwest end
3 office switch. A CLEC may also request features that are available but not activated in a
4 Qwest end office switch.

5 **Q. DO THE INDIVIDUAL FEATURES PROPOSED BY QWEST HAVE A**
6 **RECURRING CHARGE?**

7 A. Yes. The individual features and corresponding recurring rates are listed in Exhibit A.

8 **Q. DO THE INDIVIDUAL FEATURES PROPOSED BY QWEST HAVE**
9 **NONRECURRING CHARGES?**

10 A. Certain features have a specific non-recurring charge. Please see Exhibit A for the
11 features list and corresponding non-recurring rates.

12 **Q. PLEASE DESCRIBE THE NONRECURRING VERTICAL FEATURE**
13 **SUBSEQUENT ORDER CHARGE?**

14 A. A nonrecurring subsequent order charge applies when a CLEC orders additional vertical
15 features to an existing port. The rate is listed in Exhibit A.

16 **3. Trunk Ports**

17 **Q. WHAT TYPES OF TRUNK PORTS DOES QWEST OFFER?**

18 A. Qwest offers the following types of trunk ports:

1 DS1 Local Message Trunk Port. A DS1 Trunk Port is a DS1 trunk side switch port that is
2 extended to the trunk main distributing frame and is connected to the demarcation point
3 through an ITP. Each DS1 Trunk Port includes a subset of 24 DS0 channels capable of
4 supporting local message type traffic

5 Unbundled DS1 PRI ISDN Trunk Port (Supporting DID/DOD/PBX). A DS1 Trunk Port is
6 a DS1 trunk-side switch port terminated at a DSX1 or equivalent. Each DS1 Trunk Port
7 includes a subset of 24 DS0 channels capable of supporting DID/DOD/PBX type traffic.

8 DS0 Analog Trunk Port which is available on an individual case basis (ICB).

9 **Q. DOES QWEST PROPOSE RECURRING CHARGES FOR TRUNK PORTS?**
10 A. Yes. Qwest proposes recurring charges for trunk ports as listed in Exhibit A.

11 **Q. DOES QWEST PROPOSE NONRECURRING CHARGES FOR TRUNK PORTS?**
12 A. Yes. Qwest proposes the nonrecurring charges for trunk ports as listed in Exhibit A.
13 There is a nonrecurring charge for the digital trunk port, as well as non-recurring charges for the
14 establishment of the first and each additional message trunk group member associated with the
15 digital trunk port.

16 **F. CUSTOMIZED ROUTING**

17 **Q. PLEASE DESCRIBE CUSTOMIZED ROUTING?**

A. Customized Routing permits a CLEC to designate a particular outgoing trunk that will carry certain classes of traffic originating from the CLEC's end-users. Customized routing enables the CLEC to direct particular classes of calls to specific outgoing trunks that will permit the CLEC to provide its own interoffice facilities or select among other providers of interoffice facilities, operator services and directory assistance. Customized routing is a software function of a switch. Customized routing may be ordered as an application with Resale or Unbundled Local Switching.

Q. WHAT CHARGES DOES QWEST PROPOSE FOR CUSTOMIZED ROUTING?

A. Custom Routing applications are unique to each CLEC; therefore, Qwest proposes that it assess nonrecurring charges on an ICB basis. The nonrecurring charges categories applicable to Customized Routing include:

- Development of Custom Line Class Code – Directory Assistance or Operator Services Routing Only,
- Line Class Code Installation per Switch – Directory Assistance or Operator Services Routing Only and
- All Other Custom Routing.
- References to the three Customized Routing ICB nonrecurring charges are included in Exhibit A.

Q. WHEN IS A RECURRING ICB CHARGE APPLICABLE TO CUSTOM ROUTING?

A. There is a recurring ICB charge to maintain the LCC code developed and activated in one or more switches.

G. ACCESS TO SIGNALING COMMON CHANNEL SIGNALING/SIGNALING SYSTEM 7 (CCSAC/SS7)

Q. PLEASE DESCRIBE COMMON CHANNEL SIGNALING/ SIGNALING SYSTEM 7 (CCS/SS7).

A. Common Channel Signaling/Signaling System 7 (SS7) provides multiple pieces of signaling information via the SS7 network. This signaling information includes, but is not limited to, specific information regarding calls made on associated Feature Group D trunks and/or LIS trunks, Line Information Database (LIDB) data, Local Number Portability (LNP), Custom Local Area Signaling Services (CLASS), 8XX set up information, Call Set Up information and transient messages.

Q. WHAT RECURRING CHARGES APPLY TO SIGNALING?

A. Recurring rates include:

- CCSAC STP Port - a monthly recurring charge, per connection into the STP.

- ISUP (ISDN User Part) Signal Formulation Charge - a per terminating call set up charge to formulate the ISUP message at a SS7 Service Point or Signaling Service Point (SP/SSP).
- ISUP Signal Transport Charge - a per terminating call set up charge to transmit signaling data between the local STP and an end office SP/SSP.
- ISUP Signal Switching Charge - a per terminating call set up request charge to switch an SS7 message at the local STP.
- TCAP (Transaction Capabilities Application Part) Signal Transport Charge - a per terminating call set charge to transmit signaling data between the local STP and the regional STP.
- TCAP Signal Switching Charge - a per terminating call set-up charge to switch an SS7 message at the local STP.

The recurring charges are listed in Exhibit A.

Q. WHAT NONRECURRING CHARGES APPLY TO SIGNALING?

A. Non-recurring charges for CCS/SS7 include:

- CCSAC Options Activation charge for Basic translations: (first activation and each additional activation, per order (nonrecurring); and
- CCSAC Options Activation charge for Database translations: (first activation and each additional activation, per order (nonrecurring)

1
2 The nonrecurring charges are listed in Exhibit A.
3
4 **H. ADVANCED INTELLIGENT NETWORK (AIN)**

5 **Q. PLEASE DESCRIBE ADVANCED INTELLIGENT NETWORK (AIN).**

6 A. Advanced Intelligent Network (AIN) is a call-related database platform that enables
7 telecommunication companies to provide customized incoming and out-going call
8 management services. AIN is deployed, using SS7 architecture, to provide the framework
9 to create and deploy new network services. AIN service is offered and available as an
10 enhancement to a CLEC's SS7 capable network structure and operation of AIN Version
11 0.1-capable switches to offer new network-wide switching services without the need to
12 deploy new capabilities within each end office switch.

13 **Q. WHAT AIN SERVICES ARE AVAILABLE TO CLECS?**

14 A. The following AIN services are offered and available as an enhancement to CLEC's SS7
15 capable network structure and operation of AIN Version 0.1 capable switches.

16 AIN Customized Services (ACS) permits a CLEC to use Qwest's AIN service application
17 development process to develop new AIN services or features. Services developed through
18 the ACS process can either be implemented in Qwest's network or provided to the CLEC
19 for installation in its own network.

1 Next, AIN Platform Access (APA) permits a CLEC to provide to its end-users any AIN
2 service that is deployed by that CLEC using the ACS process in a QWEST Service
3 Connection Point (SCP).

4 Finally, AIN Query Processing (AQP) TCAP queries are used to collect information from
5 the AIN database for use in call processing of the AIN based services above. CLEC
6 launches a query from an AIN capable switch over the SS7 network to the Qwest Signal
7 Transfer Point (STP). This query is directed to Qwest's SCP to collect data for the response
8 to the originating switch.

9 **Q. WHAT RECURRING CHARGES APPLY TO AIN SERVICES?**

10 A. There are two recurring charges that apply to AIN services. First, the AIN Platform Access
11 recurring charge is assessed on a monthly individual case basis. Second, the AIN Query
12 Processing recurring charge is developed on an individual case base and is assessed on a
13 per query basis. Reference to the AIN ICB recurring charges are included in Exhibit A.

14 **Q. WHAT NONRECURRING CHARGES APPLY TO AIN SERVICES?**

15 A. The non-recurring rates for - AIN Customized Services (ACS) and AIN Platform Access
16 (APA) will be determined on an ICB basis. Charges will be assessed in accordance with
17 the specific service requested by the CLEC. Reference to the AIN ICB non-recurring
18 charges are included in Exhibit A.

I. LINE INFORMATION DATA BASE (LIDB)

Q. PLEASE DESCRIBE LIDB DATA STORAGE.

A. Line Information Database (LIDB) stores various telephone line numbers and Special Billing Number (SBN) data used by operator services systems to process and bill Alternately Billed Services (ABS) calls. The operator services system accesses LIDB data to provide originating line (calling number), billing number and terminating line (called number) information. LIDB is used for calling card validation, fraud prevention, billing or service restrictions and the sub-account information to be included on the call's billing record.

Q. WHAT CHARGES APPLY TO LIDB DATA STORAGE?

A. There is no charge to store CLEC line information in Qwest's LIDB database.

Q. PLEASE DESCRIBE LINE VALIDATION ADMINISTRATIVE SYSTEM (LVAS).

A. LVAS is the comprehensive administrative management tool that loads the LIDB data and coordinates line record updates in Qwest's redundant LIDB databases. LVAS is the vehicle that audits stored information and assures accurate responses. LVAS access is only available to facility-based CLECs.

Q. WHAT NON RECURRING RATE ELEMENTS ARE APPLICABLE TO LVAS?

A. LIDB Line Record Initial Load Charge - CLEC shall reimburse Qwest as shown in Exhibit A, for the initial loading of CLEC's end user line record information, for LIDB and/or

ICNAM, including the formatting of data so that it may be loaded into LVAS. If the initial load of ICNAM records are provided with the initial load of LIDB records, a single LIDB/ICNAM charge as described in Exhibit A applies. If initial ICNAM records are not provided by CLEC for loading together with the initial LIDB record load, a LIDB/ICNAM charge applies to the ICNAM load, and a second LIDB/ICNAM charge applies to the LIDB load.

- Mechanized Service Account Update - LVAS Access is the product that allows CLEC to add, update and delete telephone line numbers from the QWEST LIDB for CLEC's end users. QWEST will charge CLEC for each addition or update processed on an individual case basis.

- Individual Line Record Audit - CLEC may verify the data for a given ten-digit line number using an inquiry of its end user data.
- Account Group Audit - CLEC may audit an individual Account Group NPA-NXX.
- Expedited Request Charge for Manual Updates - CLEC may request an expedited manual update to the LIDB database that requires immediate action (*i.e.*, deny PIN number). U S WEST shall assess CLEC an expedited request charge for each manual update.

1 Each of these elements is listed as a non-recurring ICB charge in Exhibit A. Only the
2 initial load of 20,000 line records has a rate at this time. This initial load rate is a pass
3 through of the charges incurred by Qwest for the vendor.

4 **Q. PLEASE DESCRIBE LIDB QUERY SERVICE.**

5 A. LIDB Query Service provides information to query originators for use in processing
6 Alternately Billed Services (ABS) calls. ABS call types which include calling card, billed
7 to third number, and collect calls. On behalf of CLEC, Qwest will process LIDB queries
8 from query originators (Telecommunications Carriers) requesting CLEC telephone line
9 number data. Qwest allows LIDB query access through Qwest regional STPs.

10 **Q. DOES QWEST PROPOSE A RECURRING CHARGE FOR LIDB QUERY**
11 **SERVICE?**

12 A. Yes. The recurring charge is listed in Exhibit A.

13 **Q. DOES QWEST PROPOSE A NONRECURRING CHARGE FOR LIDB QUERY**
14 **SERVICE?**

15 A. Yes. The nonrecurring charge is listed in Exhibit A. The LIDB Query service requires a
16 CCSAC activation charge.

17 **Q. PLEASE DESCRIBE FRAUD ALERT NOTIFICATION.**

18 A. The WatchDog Fraud Management System (FMS) processes the LIDB query detail
19 records to establish patterns and identify potential fraudulent situations. WatchDog issues

1 an alert to the Qwest (check) Fraud Investigation Unit (FIU). Qwest will notify CLEC of
2 system alerts on CLEC end user lines.

3 **Q. ARE THERE ANY RECURRING OR NONRECURRING CHARGES FOR FRAUD**
4 **ALERT NOTIFICATION?**
5 A. No charges apply to Fraud Alert Notification.

6 **J. 8XX DATA BASE**

7 **Q. PLEASE DESCRIBE 8XX DATABASE QUERY SERVICE.**
8 A. 8XX Database Query Service is an originating service that provides the Carrier
9 Identification Code (CIC) and/or the vertical features associated with the 8XX number.
10 Call routing information in the SMS/800 Database reflects the desires of the owner of the
11 8XX number as entered in the SMS/800 by its chosen responsible organization.

12 **Q. WHAT RECURRING CHARGES APPLY TO 8XX DATABASE QUERY**
13 **SERVICE?**
14 A. A recurring charge is assessed on a per query basis for 8XX Database Query Service,
15 POTS Translation, and Call Handling and Destination Features. The rates for 8XX
16 Database Query Service only apply to queries from a CLEC's switch to the QWEST 8XX
17 Database. Exhibit A lists the price.

18 **Q. WHAT NONRECURRING CHARGES APPLY TO 8XX DATABASE QUERY**
19 **SERVICE?**

1 A. The non-recurring CCSAC Options Activation Charge for CCSAC/SS7 will apply. Exhibit
2 A lists the price.

3 **K. INTERNETWORK CALLING NAME (ICNAM)**

4 **Q. PLEASE DESCRIBE INTERNETWORK CALLING NAME (ICNAM) SERVICE.**
5 A. Internetwork Calling Name (ICNAM) Service is a Qwest service that allows a CLEC to
6 query Qwest's ICNAM database in order to secure the listed name information associated
7 with the requested telephone number in order to deliver that information to the CLEC's end
8 users. ICNAM contains current listed name data by working telephone number served or
9 administered by Qwest, including listed name data provided by other Telecommunications
10 Carriers participating in the Calling Name Delivery Service Arrangement.

11 **Q. WHAT RECURRING CHARGES APPLY TO ICNAM SERVICE?**
12 A. The recurring charges for ICNAM are billed on a per query basis. Exhibit A lists the price.

13 **Q. WHAT NONRECURRING CHARGES APPLY TO ICNAM SERVICE?**
14 A. If the initial load of ICNAM records are provided with the initial load of LIDB records, a
15 single LIDB/ICNAM charge as described in Exhibit A applies. If initial ICNAM records
16 are not provided by CLEC for loading together with the initial LIDB record load, a
17 LIDB/ICNAM charge applies to the ICNAM load.

18 **Q. WHAT NON-RECURRING CHARGES APPLY TO ICNAM QUERY SERVICE?**

1 A. The non-recurring CCSAC Options Activation Charge for CCSAC/SS7 will apply. Exhibit
2 A lists the price.

3 **L. UNE COMBINATIONS**

4 **Q. WILL QWEST PROVIDE ACCESS TO UNE COMBINATIONS?**
5 A. Qwest shall provide CLEC with non-discriminatory access to combinations of unbundled
6 network elements including but not limited to the UNE-Platform (UNE-P).

7 **Q. PLEASE DEFINE UNBUNDLED NETWORK ELEMENT (UNE)**
8 **COMBINATIONS.**
9 A. A"UNE Combination" is a combination of unbundled network elements provided to
10 CLECs. UNE Combinations are provided to CLECs in a combined state. UNE
11 combinations include UNE-Platform (UNE-P), Private Line Combinations and Enhanced
12 Extended Loops (EEL Combinations). Qwest witness, Robert F. Kennedy will discuss
13 Private Line Combinations and EEL.

14 **Q. WHAT RECURRING CHARGES DOES QWEST PROPOSE FOR UNE-P**
15 **COMBINATIONS?**
16 A. Recurring monthly charges for each unbundled network element that comprise the UNE
17 Combination shall apply when a UNE Combination is ordered. UNE recurring prices are
18 listed in Exhibit A.

Q. WHAT NONRECURRING CHARGES DOES QWEST PROPOSE FOR UNE-P COMBINATIONS?

A. Nonrecurring charges apply to based upon the type of UNE-P combination and whether provisioning requires conversion or new connection to occur. In many cases, the non-recurring charges are also broken out by whether it is the first or additional combination on the local service request to Qwest. The nonrecurring charges are listed in Exhibit A.

Q. WHAT UNE COMBINATIONS ARE AVAILABLE FROM QWEST?

A. UNE Combinations are available in the following standard products:

- UNE-P in the following form: 1) 1FR/1FB Plain Old Telephone Service (POTS); 2) ISDN - either Basic Rate or Primary Rate; 3) Digital Switched Service (DSS); 4)PBX Trunks, and 5) Centrex, and
- EEL, which will be addressed by Qwest witness, Robert F. Kennedy.

If CLEC desires access to a different UNE Combination, CLEC may request access through the BFR Process that is also discussed by Robert F. Kennedy.

M. DAILY USAGE RECORD FILE

Q. PLEASE DESCRIBE THE DAILY USAGE RECORD FILE.

A. The daily usage record file provides the accumulated set of call information for a given day as captured or recorded by the network switches. The file will be transmitted Monday through Friday, excluding Qwest holidays. This information is a file of un-rated Qwest-originated usage messages and rated CLEC-originated usage messages. It is provided in Alliance for Telecommunication Industry Solution (ATIS) standard (Electronic Message

1 Interface) EMI format. The daily usage record file contains multi-state data for the data
2 processing center generating this information. Individual state identification information is
3 contained with the message detail. This file will be provided to CLECs that order either
4 resold services or unbundled switch ports from Qwest.

5 **Q. WHAT RECURRING CHARGES APPLY TO THE DAILY USAGE RECORD**
6 **FILE?**

7 A. A recurring charge for the daily usage file is assessed on a per record basis and is reflected
8 in Exhibit A.

9 **V. CONCLUSION**

10 **Q. DOES THIS CONCLUDE YOUR TESTIMONY?**

11 A. Yes.

BEFORE THE ARIZONA CORPORATION COMMISSION

WILLIAM A. MUNDELL
CHAIRMAN
JIM IRVIN
COMMISSIONER
MARC SPITZER
COMMISSIONER

IN THE MATTER OF INVESTIGATION INTO QWEST CORPORATION'S COMPLIANCE WITH CERTAIN WHOLESALE PRICING REQUIREMENTS FOR UNBUNDLED NETWORK ELEMENTS AND RESALE DISCOUNTS	)	**DOCKET NO. T-00000A-00-0194**
		AFFIDAVIT OF BARBARA J. BROHL
STATE OF COLORADO	)	
COUNTY OF DENVER	)	

Barbara J. Brohl, of lawful age being first duly sworn, deposes and states:

1. My name is Barbara J. Brohl. I am Director – Wholesale Advocacy of Qwest Corporation in Denver, Colorado. I have caused to be filed written testimony and exhibits in support of Qwest Corporation in Docket No. T-00000A-00-0194.

2. I hereby swear and affirm that my answers contained in the attached testimony to the questions therein propounded are true and correct to the best of my knowledge and belief.

Further affiant sayeth not.

Barbara J. Brohl

SUBSCRIBED AND SWORN to before me this 12th day of March, 2001.

Theresa G. Gray
Notary Public residing at
Denver, Colorado

My Commission Expires: My Commission Expires Dec. 31, 2001

BEFORE THE ARIZONA CORPORATION COMMISSION

WILLIAM A. MUNDELL
CHAIRMAN
JIM IRVIN
COMMISSIONER
MARC SPITZER
COMMISSIONER

IN THE MATTER OF INVESTIGATION	)	
INTO U S WEST COMMUNICATIONS,	)	**DOCKET NO. T-00000A-00-**
0194		
INC'S COMPLIANCE WITH CERTAIN	)	**PHASE II**
WHOLESALE PRICING REQUIREMENTS	)	
FOR UNBUNDLED NETWORK	)	
ELEMENTS AND RESALE DISCOUNTS	)	

DIRECT TESTIMONY OF

LARRY B. BROTHERSON

QWEST CORPORATION

MARCH 15, 2001

TABLE OF CONTENTS

TOPIC		PAGE
EXECUTIVE SUMMARY		3
I.	INTRODUCTION	6
II.	RECIPROCAL COMPENSATION FOR INTERNET-BOUND TRAFFIC	8
III.	INTERNET-BOUND TRAFFIC IS INTERSTATE, NOT LOCAL	12
IV.	RECIPROCAL COMPENSATION FOR INTERNET TRAFFIC WOULD ADD TO THE SUBSIDY THAT QWEST ALREADY PROVIDES FOR INTERNET TRAFFIC BASED ON THE FCC'S ESP EXEMPTION	18
V.	QWEST CAN IDENTIFY INTERNET-BOUND TRAFFIC	29
VII.	APPLICATION OF TANDEM AND END OFFICE RECIPROCAL COMPENSATION RATES WHEN A CLEC SWITCH QUALIFIES AS A TANDEM	33
VIII.	TELECOMMUNICATION SERVICES AVAILABLE FOR RESALE	37
IX.	CUSTOMER TRANSFER CHARGE (CTC)	43
X.	NUMBER PORTABILITY	44
XI.	911 SERVICE	44
XII.	WHITE PAGES DIRECTORY LISTINGS	45
XIII.	DIRECTORY ASSISTANCE	45
XIV.	DIRECTORY ASSISTANCE LIST INFORMATION	46

XV. TOLL AND ASSISTANCE OPERATOR SERVICES 47

XVI. CONCLUSION 49

EXECUTIVE SUMMARY

My testimony addresses the following issues that are presented in this docket: (1) whether the Commission should require the payment of reciprocal compensation for Internet traffic; (2) the requirement of symmetrical rates for reciprocal compensation and how that requirement should be applied to switches owned by competitive local exchange carriers ("CLECs"); (3) the telecommunications services that Qwest makes available for resale pursuant to section 251(c)(4) of the Telecommunications Act of 1996 ("the Act"); and (4) the nature of various services that Qwest provides to CLECs, including the customer transfer charge, number portability, 911 service, white pages listings, directory assistance, and toll and assistance operator services.

Reciprocal Compensation for Internet Traffic

In addressing issues relating to call termination charges, the Commission must consider whether Internet traffic should be included in any reciprocal compensation obligations that exist between carriers. As the Commission is aware from recent interconnection arbitrations, the issue of reciprocal compensation for Internet traffic raises important considerations of economics and public policy. Qwest believes it is imperative that this Commission establish the principle that carriers should not be required to pay reciprocal compensation for interstate, Internet-related traffic as part of the local call termination pricing structure.

This Commission has previously ruled that economic and policy considerations support not requiring the payment of reciprocal compensation for Internet traffic. As I discuss in the testimony that follows, this result is supported by several considerations. First, the FCC has established that the reciprocal compensation obligations established by section 251(b)(5) of the Telecommunications Act of 1996 ("the Act") apply only to local traffic and do not apply to Internet traffic. This result is supported by the FCC's additional

conclusion that Internet traffic is not local but, instead, is predominately interstate in nature. Second, as this Commission and other commissions have recently recognized, requiring the payment of reciprocal compensation for Internet traffic leads to an improper subsidy of the Internet and Internet use. In addition, this form of compensation is not consistent with the economic principle of cost causation and creates numerous improper economic incentives for carriers. These economic and policy-related issues are discussed in detail in the testimony of Qwest witness, Dr. William Taylor.

Symmetrical Rates and Reciprocal Compensation

Qwest believes that a clarification of this Commission's policy is needed for the purpose of defining how reciprocal compensation should be applied when a CLEC switch has been determined to be a tandem. Qwest believes that the proper application of reciprocal compensation in such cases is for the parties to bill each in a similar manner for similar traffic. Thus, when a CLEC "mirrors" the ILEC's rates, end office rates should apply to Qwest traffic under the same circumstances that Qwest charges CLECs end office rates. In cases where a CLEC has a direct trunk to a Qwest end office, the CLEC avoids the additional tandem charge and pays only end office rates. Consistent with the principle of rate symmetry, like the CLECs, Qwest should only be required to pay end office rates for direct-trunked traffic.

Telecommunications Services Available for Resale

Consistent with the requirements of section 251(c)(4) of the Act, Qwest makes available for resale the retail telecommunications services that it provides to its retail subscribers. These general categories of resale services include Basic Exchange Telecommunications Service, Basic Exchange Features, and IntraLATA Toll. While the vast majority of Qwest's retail services are available for resale, there are some non-telecommunications services that are not available for resale, as the Act does not require that these services be provided for resale.

The Nature of Miscellaneous Services

My testimony also describes the nature of the miscellaneous services listed above that Qwest makes available to CLECs. These descriptions of the services provide support for the pricing proposals that Qwest is presenting for each service.

I. INTRODUCTION

Q. PLEASE STATE YOUR NAME, OCCUPATION AND BUSINESS ADDRESS.

A. My name is Larry B. Brotherson. I am employed by Qwest Corporation ("Qwest"), f/k/a U S WEST Communications, Inc., as a director in the Wholesale Markets organization. My business address is 1801 California Street, Room 2350, Denver, Colorado 80202.

Q. BRIEFLY OUTLINE YOUR EMPLOYMENT BACKGROUND.

A. In 1979, I joined Northwestern Bell Telephone Company. I have held several assignments within Northwestern Bell, and later within Qwest, then U S WEST, primarily within the Law Department. Over the past 20 years, I have been a state regulatory attorney in Iowa, a general litigation attorney, and a commercial attorney supporting several organizations within Qwest. My responsibilities have included evaluating and advising the company on legal issues, drafting contracts, and addressing legal issues that arise in connection with specific products. With the passage of the Telecommunications Act of 1996 ("the Act"), I was assigned to be the attorney in support of the Interconnection Group. In that role, I was directly involved in negotiating with the CLECs contract language implementing various sections of the Act, including the Act's reciprocal compensation provisions. In 1999, I assumed my current duties as director of wholesale advocacy.

My current responsibilities include coordinating the witnesses for all interconnection arbitrations and for hearings related to costs and disputes

over interconnection issues. Additionally, I work with various groups within the Wholesale Markets organization of Qwest to develop testimony addressing issues associated with interconnection services.

Q. WHAT IS YOUR EDUCATIONAL BACKGROUND?

A. I have two degrees: a Bachelor of Arts degree from Creighton University in 1970, and a Juris Doctorate degree from Creighton University in 1973.

Q. HAVE YOU PREVIOUSLY TESTIFIED BEFORE THE ARIZONA PUBLIC SERVICE COMMISSION?

A. Yes. I testified in the Sprint arbitration, Docket Nos. T02432B-00-0026 and T01051B-00-0026.

Q. PLEASE IDENTIFY THE ISSUES THAT YOU ADDRESS IN YOUR TESTIMONY.

A. The purpose of my testimony is to address: (1) whether the Commission should require the payment of reciprocal compensation for Internet traffic; (2) the requirement of symmetrical rates for reciprocal compensation and how that requirement should be applied to switches owned by competitive local exchange carriers ("CLECs"); (3) the telecommunications services that Qwest makes available for resale pursuant to section 251(c)(4) of the Telecommunications Act of 1996 ("the Act"); and (4) the nature of various services that Qwest provides to CLECs, including the customer transfer charge, number portability, 911 service, white pages listings, directory assistance, and toll and assistance operator services.

II. RECIPROCAL COMPENSATION FOR INTERNET-BOUND TRAFFIC

Q. WHAT ARE QWEST'S RECOMMENDATIONS FOR THE APPROPRIATE APPLICATION OF RECIPROCAL COMPENSATION IN ARIZONA?

A. Reciprocal compensation should apply only to local traffic exchanged between local carriers. No Arizona public policy interest is served by including Internet-bound traffic in reciprocal compensation. This traffic is interstate in nature, and, absent the ESP exemption, would be subject to interstate access charge compensation. The fact that the FCC has indefinitely exempted Internet-bound traffic from access charge compensation does not mean that this traffic should now somehow qualify as local traffic or be subject to reciprocal compensation. Indeed, Qwest already has substantial uncompensated costs relating to Internet traffic in the form of significant investments in network infrastructure to handle this type of traffic and through its inability to recover the costs it incurs for these calls because of the ESP exemption. Requiring Qwest to pay reciprocal compensation to a second local provider on top of these other uncompensated costs would be inequitable and would increase the subsidy that Qwest and its ratepayers already are providing.

Q. DO OTHER COMPANY WITNESSES ADDRESS THESE ISSUES?

A. Yes. Joseph Craig addresses network issues related to Internet-bound traffic. Dr. William Taylor addresses the economic and policy issues arising from the inappropriate application of reciprocal compensation to Internet-bound traffic.

Q. HAS THIS COMMISSION RECENTLY ADDRESSED WHETHER RECIPROCAL COMPENSATION SHOULD BE PAID FOR INTERNET-BOUND TRAFFIC?

A. Yes, it has. In the arbitration between Qwest and Sprint during the past year, this Commission rejected Sprint's request that Qwest be required to pay reciprocal compensation for Internet-bound traffic.[1] In doing so, the Commission explained that reciprocal compensation would lead to an improper subsidy of the Internet by ratepayers and would unfairly require Qwest to not only build the facilities needed to carry that traffic but also to pay compensation for that traffic:

> We share [Qwest's] concern that establishing reciprocal compensation for ISP bound traffic would result in ratepayers subsidizing the Internet. Further, this Commission recognizes that ISP bound traffic increases the need for additional infrastructure to accommodate increased network traffic. Thus, it is inappropriate for this Commission to order [Qwest] to construct facilities to handle additional traffic and pay for the privilege of doing such. Therefore, we believe that bill and keep is the appropriate compensation method for ISP bound traffic.

Id.

Q. HAS THE QWEST PROPOSAL IN THIS PROCEEDING BEEN ADOPTED BY OTHER COMMISSIONS?

---

1 In the Matter of the Petition of Sprint Communications Company, L.P., for Arbitration of Interconnection Rates, Terms, Conditions and Related Arrangements with U S WEST Communications, Inc., Docket Nos. T-02432B-00-0026 and T-01051B-00-0026, Decision No. 62650 at 6-7 (June 13, 2000).

A. Yes. In the US WEST/Sprint Arbitration and the US WEST/ICG Arbitration, both decided within the past year, the Colorado Commission ruled that reciprocal compensation should not be paid for Internet-bound traffic.[2]

Most recently, the Iowa Utilities Board ruled in the Sprint Arbitration that Qwest was not obligated to pay reciprocal compensation Internet-bound traffic. The Board concluded that reciprocal compensation for Internet-bound traffic

> would introduce a series of unwanted distortions into the market: cross–subsidization of CLECs, ISPs and Internet users by the ILECs customers who do not use the Internet, excessive use of the Internet, excessive entry into the market by CLECs specializing in ISP traffic mainly for the purpose of receiving compensation from the ILECs, and disincentives for CLECs to offer either residential service or advanced services.[3]

In addition, the South Carolina Commission recently ruled that reciprocal compensation should not be paid for Internet traffic, explaining that:

> In the record before this Commission in the instant arbitration, AT&T agrees that the traffic in question is interstate, not local. This traffic does not originate and terminate in the same local service area under any viable theory that has been advanced in this

---

[2] In the Matter of Sprint Communications Company, L.P. for Arbitration, Docket No. 00B-011T, Decision No. C00-479, Initial Commission Decision (May 5, 2000); In the Matter of Petition of ICG Telecom Group, Inc. for Arbitration, Docket No. 00B-103T, Decision No. C00-858, Initial Commission Decision (August 7, 2000).

[3] In re Arbitration of: Sprint Communications Company, L.P., and U S WEST Communications, Inc., n/k/a Qwest Corporation, Docket No. ARB-00-1, Arbitration Order (Issued: Dec. 21, 2000) at 4.

> case. As the Massachusetts and Colorado Commissions have so clearly stated, the conclusion that AT&T wants this Commission to reach is not in the public interest and in fact creates disincentives for CLECs to offer residential or advanced services themselves.[4]

Q. DO RECENT DEVELOPMENTS SUPPORT THE CONCERNS THAT THE COMMISSION EXPRESSED IN THE U S WEST/SPRINT ARBITRATION RELATING TO RECIPROCAL COMPENSATION?

A. Yes. As the facts regarding reciprocal compensation for Internet-bound traffic continue to unfold, it is becoming increasingly clear that the practice creates a number of uneconomic incentives that do not benefit the public interest in Arizona. My testimony, along with that of Mr. Craig and Dr. Taylor, is intended to create a current record of the facts and policy implications that this Commission should consider as it revisits the issue of reciprocal compensation in the context of this proceeding. To make sound public policy decisions, the Commission can now look back at the actual historical data that is an outgrowth of earlier decisions. In this proceeding, there will be an opportunity to review the Internet-bound minutes and the balance of Internet-bound traffic and local traffic that is actually being exchanged. In addition, both the growth of the Internet generally and the recent emergence of long distance voice telephone calls placed via the Internet ("Voice over IP") that avoid access charges provide further reason to revisit this issue.

---

4 Petition of AT&T Communications of the Southern States, Inc. for Arbitration of Certain Terms and Conditions of a Proposed Interconnection Agreement with BellSouth Telecommunications, Inc. Pursuant to 47 U.S.C. Section 252, Docket No. 2000-527-C, Order No. 2001-079 at 11-12 (S.C. Commission Jan. 30, 2001) ("South Carolina Order").

Qwest believes that if local providers are prevented from collecting access charges on the interstate, Internet calls, the fairest alternative is not to require reciprocal compensation payments from just one of the joint providers. The solution that is even-handed for all local carriers is to adopt a bill and keep policy for Internet-bound traffic, at least until the FCC issues a final, definitive order relating to this issue.

III. INTERNET-BOUND TRAFFIC IS INTERSTATE, NOT LOCAL

Q. HAS INTERNET-BOUND TRAFFIC BEEN RECOGNIZED HISTORICALLY AS BEING PREDOMINATELY INTERSTATE, NOT LOCAL, IN NATURE?

A. Yes. The FCC has traditionally and consistently concluded that Internet-bound traffic is interstate in nature. As early as 1983, in a proceeding involving the application of interexchange access charges to enhanced service providers (a definitional category under FCC rules that includes ISPs), the FCC stated:

> a facilities-based carrier, reseller or enhanced service provider might terminate few calls at its own location and thus would make relatively heavy interstate use of local exchange services and facilities to access its customers.[5]

In that order, the FCC extended interstate access charges to certain interstate access users, but determined as a policy matter to exempt enhanced service providers from such charges in order to spare those carriers the shock of a too-sudden increase in charges. The FCC made it

---

[5] MTS and WATS Market Structure, CC Docket No. 78-72 Phase I, Memorandum Opinion and Order, 97 FCC 2d 682, 711 (1983) ("MTS/WATS Market Structure Order").

clear that its decision temporarily to treat enhanced service provider traffic the same as local traffic for access charge purposes did not affect the factual conclusion that such traffic is jurisdictionally interstate in nature. The FCC stated:

> We believe that it is reasonable similarly to require that carrier access charges be applied to any private line reseller to which ENFIA would have applied. Other users who employ exchange service for jurisdictionally interstate communications, including . . . enhanced service providers, . . . who have been paying the generally much lower business service rates, would experience severe rate impacts were we immediately to assess carrier access charges upon them.[6]

This conclusion was reaffirmed last year when the FCC stated that:

> [t]he Commission traditionally has characterized the link from an end user to an [enhanced service provider] as an interstate access service.[7]

More recently, in approving the applications of Southwestern Bell Telephone pursuant to section 271 of the Act for entry into the long distance markets in Kansas and Oklahoma, the FCC specifically stated that payment of reciprocal compensation for Internet-bound traffic is not required for 271 approval. Consistent with its earlier ruling in the ISP Order that Internet traffic is predominately interstate in nature, the FCC ruled in

---

6 Id. at 715 (emphasis added).

7 In the Matter of Implementation of the Local Competition Provisions in the Telecommunications Act of 1996 and Inter-Carrier Compensation for ISP-Bound Traffic, CC Docket Nos. 96-98 and 99-68, Declaratory Ruling in CC Docket No. 96-98 and Notice of Proposed Rulemaking in CC Docket No. 99-68, at ¶ 16 (released February 26, 1999) ("ISP Order"), vacated by Bell Atlantic Tel. Cos. v. FCC, 206 F.3d 1 (D.C. Cir. 2000).

1 the SBC order that Internet traffic is not within the reciprocal compensation
2 obligations imposed by section 251(b)(5) of the Act, since those obligations
3 apply only to local traffic.[8]

4 **Q. IS THE FCC'S CONCLUSION THAT INTERNET-BOUND TRAFFIC IS**
5 **PREDOMINATELY INTERSTATE CONSISTENT WITH THE TECHNICAL**
6 **NATURE OF INTERNET-BOUND CALLS?**

7 A. Yes, it is. As described in the testimony of Mr. Craig, from a technical,
8 network perspective, Internet-bound calls are analogous to long distance
9 calls in the way they are routed. In addition, the remote hubs to which
10 Internet calls are delivered are located outside Arizona, meaning that
11 Internet calls that originate in Arizona usually cross state lines.

12 **Q. HAS THE FCC ADDRESSED WHETHER, AS A FACTUAL MATTER,**
13 **INTERNET-BOUND CALLS "TERMINATE" AT THE ISP'S LOCAL**
14 **SERVER?**

15 A. Yes. The FCC has concluded that Internet-bound calls "do not terminate at
16 the ISP's local server, as CLECs and ISPs contend, but continue to the
17 ultimate destination or destinations, specifically at an Internet website that is
18 often located in another state." ISP Order at ¶ 12.

19 **Q. DIDN'T THE D.C. CIRCUIT OF APPEALS VACATE THE ISP ORDER?**

---

8 In the Matter of Joint Application by SBC Communications Inc., . . . for Provision of In-Region, InterLATA Services in Kansas and Oklahoma, CC Docket No. 00-217, FCC 01-29 (Rel. Jan. 22, 2001) at ¶¶ 250-51.

1 A. Yes, it did. On March 24, 2000, the D.C. Circuit vacated the ISP Order and
2 remanded the case to the FCC.

3 **Q. ON WHAT BASIS DID THE D. C. CIRCUIT VACATE THE ISP ORDER?**

4 A. The court vacated the ISP Order on grounds that the FCC failed to explain
5 adequately why Internet traffic should be examined end-to-end and why it
6 should be excluded from reciprocal compensation.

7 **Q. WHAT IS THE EFFECT OF THE D.C. CIRCUIT COURT'S DECISION?**

8 A. The court remanded the matter to the FCC. The FCC is now addressing
9 the determinations it made in its ISP Order, consistent with the D.C.
10 Circuit's guidance that it explain the basis for those determinations.

11 **Q. DOES THE D.C. CIRCUIT'S DECISION AFFECT THE MERITS OF THE**
12 **FCC'S FINDING REGARDING THE INTERSTATE NATURE OF**
13 **INTERNET-BOUND TRAFFIC?**

14 A. No, it does not. The D.C. Circuit simply asked the FCC to clarify the
15 reasoning and use of precedent that resulted in the FCC's determination
16 that Internet-bound traffic is interstate in nature. The court did not conclude
17 that the FCC's determination was incorrect.

18 **Q. DOES QWEST CONSIDER INTERNET-BOUND TRAFFIC TO BE**
19 **"LOCAL" TRAFFIC?**

20 A. No. Qwest has consistently and publicly maintained that Internet-bound
21 traffic is not local traffic. Because this traffic is classified by the FCC as an
22 "enhanced service," Qwest is required to bill certain ESP connections out of

the local exchange tariff. Because of the exemption, ISPs cannot be forced to purchase access product offerings from the access tariffs. But Qwest has repeatedly and publicly stated that Internet-bound traffic is interstate. Qwest does not consider Internet-bound traffic to be local traffic and neither does the FCC.

Q. IS THE LOCAL EXCHANGE NETWORK USED TO PROVIDE INTERNET SERVICE?

A. Yes. Internet traffic, like long distance traffic, uses the local exchange network. As described in the testimony of Mr. Craig, when a caller makes a long distance call, the call originates on the network(s) of one or more providers who route the call to an interexchange carrier's point of presence ("POP"). The interexchange carrier then routes the call to the local exchange carrier serving the called party. That local exchange carrier then terminates the call.

Similarly, when a caller accesses the Internet, the call originates on the network(s) of one or more providers who route the call to an ISP. The call is then routed onto an Internet backbone to be terminated at the website the caller seeks to contact. Attached as Exhibit LB-1 is a diagram showing the similarity between long distance traffic and Internet-bound traffic. As the South Carolina Commission concluded in its recent order addressing this issue, the use of the local network by an ISP or an IXC is not a proper measure of whether a service is interstate or local:

> While it is true that the same local loop is used, and the call passes through the same switch, that is also true of intrastate or interstate toll calls that the subscriber makes. However, as the record demonstrates, the characteristics of the calls are

> entirely different. The average local call is very short, while the average call that transits an ISP is often quite long, which means that the two calls have entirely different cost characteristics. The Commission concludes that the fact that each type of call uses the same loop and switch is no reason to allow AT&T to recover reciprocal compensation for a call that in most cases is an interstate call, a fact admitted by AT&T.[9]

Q. ARE THERE OTHER EXAMPLES OF TRAFFIC THAT USE THE LOCAL NETWORK BUT ARE NOT TREATED AS LOCAL FOR PURPOSES OF RECIPROCAL COMPENSATION?

A. Yes. ISP dial-up access is analogous to jointly provided Feature Group A service, a type of access service that has been in place in Arizona and other states for many years. Both are line-side connections that allow end-users to dial a local number to reach an IXC or an ISP, which then switches the transmission to its ultimate destination using additional information provided by the end-user. Despite the fact that Feature Group A traffic uses the local network and the end-user initiates the call through a local number, this traffic it is not considered to be local for purposes of reciprocal compensation.

Q. WHAT DOES QWEST PROPOSE AS THE APPROPRIATE PUBLIC POLICY FOR THE PAYMENT OF LOCAL CALL TERMINATION?

A. Qwest agrees that it is appropriate to pay local call termination charges for local traffic. Because Internet-bound traffic is not local, it should not be subject to reciprocal compensation. Qwest asks the Arizona Commission

---

[9] South Carolina Order at 7.

to reinforce its prior ruling on this issue in the Sprint arbitration proceeding. Furthermore, imposing reciprocal compensation on this traffic is not consistent with the access charge exemption, but rather is inconsistent with that exemption. As Dr. Taylor discusses in his testimony, there are strong policy reasons for not requiring Qwest to pay reciprocal compensation for this traffic.

IV. RECIPROCAL COMPENSATION FOR INTERNET TRAFFIC WOULD ADD TO THE SUBSIDY THAT QWEST ALREADY PROVIDES FOR INTERNET TRAFFIC BASED ON THE FCC'S ESP EXEMPTION

Q. WHY DO CLECS ADVOCATE RECIPROCAL COMPENSATION FOR INTERNET-BOUND TRAFFIC?

A. CLECs are unable to charge interstate access to ISPs because of the FCC's ESP exemption. Qwest and every independent telephone company in Arizona accept the fact that the FCC has determined that interstate access charges cannot be recovered for Internet-bound traffic because this traffic is an enhanced service. CLECs, however, having first asked to be certified as local providers, now seek an alternative method of cost recovery and would have Qwest and other local providers pay local termination charges for interstate, Internet-bound calls. They seek payment for calls made by Qwest subscribers that Qwest delivers to CLECs and that CLECs deliver to ISPs.

Q. IF THE TRADITIONAL ACCESS SERVICE RATE STRUCTURE APPLIED, HOW WOULD QWEST AND A CLEC RECOVER THE COST OF ORIGINATING INTERNET-BOUND TRAFFIC?

A. Since the FCC has recognized that Internet traffic is largely interstate, Qwest and other local providers would recover the cost of originating Internet-bound traffic through access charges. Historically, when two local exchange carriers jointly provide access for an interstate service, the two LECs would each collect their portion of the access charges from the IXC.

As described in Mr. Craig's testimony, from a network perspective, the routing of an Internet call is very similar to the routing of a long distance call. Both types of calls involve two local exchange carriers that are jointly providing access to an interstate service. In addition, with both a long distance call and an Internet call, the originating carrier – Qwest – does not know the ultimate destination of the call and does not deliver the call to that destination. Instead, the originating carrier hands off the call to another local carrier for delivery to the ISP for delivery to its final destination. The similarity in the routing of long distance and Internet calls supports adopting a similar type of compensation mechanism for these calls.

Q. WHAT IS THE EFFECT OF THE FCC'S ACCESS CHARGE EXEMPTION UPON QWEST'S AND A CLEC'S ABILITY TO RECOVER THE NETWORK COSTS OF ORIGINATING INTERNET-BOUND TRAFFIC?

A. The access charge exemption leaves Qwest and other local companies in essentially the same position. All local service providers lose switched access revenues that, but for the FCC's access charge exemption, would be collected from the ISP.

The FCC's access charge exemption places both Qwest and the CLEC in the position of incurring the cost of carrying Internet traffic while being barred from charging for those costs. Both Qwest and the CLEC incur

costs that should be recovered - regardless of where the Internet call is originated. If the call originates on Qwest's network and is routed over the CLEC's network in order to reach the ISP, both Qwest and the CLEC incur the costs associated with the transport and switching on their respective networks.

Qwest is not contending that a CLEC owes Qwest for its lost access revenues. It is true that a CLEC also is unable to collect any access revenues from the ISP to offset its expenses associated with handling these interstate, Internet-bound calls. However, asking one local provider, Qwest, essentially to make up for the loss in access revenues of the CLEC through reciprocal compensation, as if Internet traffic is local, ignores the fact that both companies have incurred expenses that they are both prevented from recovering. There is no compelling reason why Qwest, in addition to not receiving access charges to cover its own costs, should be required to make up for the lost access revenues of a competing local provider.

Q WHAT IS THE MAGNITUDE OF THE LOST ACCESS REVENUE IN THE STATE OF ARIZONA FOR TRAFFIC GENERATED BY QWEST END USERS AND DELIVERED TO ISPS THAT ARE BEING SERVED BY CLECS?

A. Based upon the minutes of Internet-bound traffic delivered to all CLECS for 2000 and using as a surrogate the rate of one cent per minute for the portion of the interstate originating switched access charge that Qwest would receive, the amount of switched access revenue that Qwest must forego from Internet calls to CLECs in Arizona because of the ESP exemption was over $88 million in 2000.

Qwest is certainly not suggesting that the CLECs owe Qwest this money. However, as I stated earlier, there is no compelling reason why Qwest, in addition to not receiving these access charges to cover its own costs, should be required to make up for the lost access revenues of CLECs as well.

Q. HAS INTERNET TRAFFIC PLACED ANY ADDITIONAL BURDENS ON LOCAL EXCHANGE CARRIERS?

A. Yes. As Mr. Craig explains in his testimony, Internet traffic and the long hold times associated with Internet calls has dramatically increased the usage of Qwest's network. The additions that Qwest has made to its network in Arizona and in other states in response to Internet-bound traffic have required substantial capital expenditures and will continue to require additional expenditures into the foreseeable future.

Q. WHAT WAS THE OBJECTIVE OF THE TELECOMMUNICATIONS ACT OF 1996 AND THE RELATED FCC RULES?

A. The intention of the Act was to promote local competition.

Q. IS RECIPROCAL COMPENSATION ON INTERNET-BOUND TRAFFIC NECESSARY TO PROMOTE COMPETITION?

A. No. In the case of ISP business, and based on the traffic volumes that Qwest has reviewed, CLECs have been very successful in competing with Qwest for the business of selling connections to ISPs. Qwest sells these connections to the PSTN to ISPs out of Arizona local exchange tariffs. They are called Primary Rate Interconnections or PRI. Each PRI (and a large ISP can purchase hundreds of these pipes) can cost over $2,050 on

average, depending on the volume of traffic. Qwest understands that in a competitive marketplace it may lose some of this business to CLECs. But Qwest does not believe that in addition to losing ISP customer business to competition it must pay the CLEC to accept the interstate traffic for which it has chosen to compete.

Q. CAN QWEST MARKET TO ISPS IN THE SAME WAY THAT A CLEC CAN?

A. No. While Qwest can market to ISPs, it cannot create the one-way flow onto its network that a CLEC can generate. The reason for this is simple. Qwest already serves a large, diverse customer base that includes business and residential customers. It is the existence of this large customer base, not who serves the ISP, that determines the imbalance of traffic. The CLEC is able to market its services in order to capture the types of customers it wants. If, for example, a CLEC chooses to serve only ISPs, it is free to do so. Internet traffic is characterized by a one-way flow. A subscriber dials the number for its ISP, and the ISP, in turn, routes the subscriber's call onto the Internet. The website does not call back. Thus, a carrier that loads its network with ISPs can guarantee a one-way flow of traffic, which translates into revenue in a world where reciprocal compensation is paid on Internet-bound traffic. An incumbent LEC, which already has a large number of residential and business customers, cannot create that one-way flow. Attached as Exhibit Qwest 1.8 is a diagram illustrating this example.

Q. SINCE BOTH QWEST AND THE CLECS OFFER CONNECTIONS TO ISPS, SHOULDN'T THIS INTERNET TRAFFIC SIMPLY BALANCE OUT?

A. No. Traffic is not in balance for a simple reason. The balance of traffic is more directly a function of the size of the customer base than it is a function of which carrier serves ISPs. Assume Qwest serves 400,000 access lines in Phoenix and CLECs serve 10,000 access lines, and assume that the end users of both companies subscribe to AOL at approximately the same percentage, 20%. In this scenario, Qwest would have 80,000 customers calling AOL and CLECs would have 2,000 customers calling AOL. Thus, the size of the customer base is the important number that impacts the public policy issue, not the identity of the carrier that serves the ISP. It is the calls of the 80,000 customers that will generate the majority of the costs. If AOL were connected to the Qwest switch, Qwest's 80,000 customers would be handed off to the ISP at the Qwest switch. Qwest would incur originating access expenses but would be unable to collect access charges. Qwest would have the expenses associated with calls from those 80,000 customers, but it would not owe any other party money for this traffic. By contrast, if AOL were connected to a CLEC switch, the calls from Qwest's 80,000 customers would go through a Qwest switch and then through a CLEC switch to reach the ISP. If this Commission were to permit reciprocal compensation for this Internet traffic, CLECs would bill Qwest for all the minutes of traffic that Qwest collects and hands off to the ISP switch. Qwest would still incur the cost of originating 80,000 interstate calls, but it now would also have to pay reciprocal compensation to a third party, a CLEC. This creates a huge financial incentive for CLECs to encourage ISPs to connect to the CLEC's network.

Q. IS THIS A HYPOTHETICAL EXAMPLE?

A. No, this is not a hypothetical example. It is borne out by the actual traffic patterns in Arizona and that have evolved in those states that have allowed

1 reciprocal compensation for Internet calls in recent years. In states where
2 CLECs are paid reciprocal compensation for Internet traffic, there is a
3 strong movement to sign up ISPs as CLEC customers and shift the balance
4 of traffic. In some states, the *only* customers certain CLECs have signed
5 up are ISPs. In these states, over 90% of all traffic delivered to CLECs
6 typically is Internet-bound. In Arizona, for example, Qwest delivered over
7 8.8 billion Internet-bound minutes to CLECs during 2000, while only 605
8 million Internet-bound minutes, or 6% of the total Internet-bound minutes,
9 were delivered from CLECs to Qwest. It is the customer base of end users
10 that creates this distortion. There is no balancing out of calls, minutes, or
11 dollars paid for reciprocal compensation for Internet traffic if CLECs actively
12 recruit ISPs for the purpose of generating minutes on their network.
13 Instead, reciprocal compensation for these calls that are characterized by
14 their one-way, interstate nature and their long hold times results in huge
15 transfers of dollars to CLECs. By way of further illustration, if the
16 Commission were to require reciprocal compensation for Internet traffic,
17 using the minutes of use in 2000 and a call termination rate of $0.0028, the
18 result would be a payment of about $23 million to a small number of CLECs
19 in Arizona for Internet-bound traffic originated by Internet subscribers on
20 Qwest's network.

21 **Q. IS THERE A DISTINCTION BETWEEN ISPS AND CLECS?**

22 A. Yes, but that distinction is rapidly disappearing. AT&T recently announced
23 its strategic alliance with AOL, America's largest ISP. And CLEC-owned
24 ISPs are also entering the new business of access free long distance over
25 the Internet. In conjunction with its purchase of a 39% stake in Net2Phone,
26 AT&T's own ISP, WorldNet, has offered 1000 free minutes of domestic long
27 distance calling from personal computers to phones using Net2Phone's

web-based communications technology. Nextlink has announced a $2.9 billion investment in Concentric, a major ISP. And Sprint now owns 14.7% of the second largest ISP in the world, Earth Link. In Iowa, an ISP has recently sought reclassification as a CLEC. Every CLEC-owned ISP already receives subsidies from the local telephone provider today by virtue of the ESP exemption. The local telephone company must make the investment to beef up its network for end users to accommodate these interstate calls with their extremely long hold times and yet cannot recover this investment from the cost causer because the ISP is exempt from access charges. There is no sound public policy reason for the Arizona Commission to expand this subsidy by requiring payment to the CLEC that owns the ISP for accepting the traffic it created.

Q. HOW SIGNIFICANT IS INTERNET USE?

A. Internet use in the United States has a penetration rate of fifty percent and is still growing. The Pew Internet & American Life Project estimates that the number American adults with Internet access from home increased by 16 million during the last six months of 2000 to more than 104 million, an 18% increase. PEW also reported that on a typical day at the end of 2000, 58 million Americans were logging on – an increase of 9 million people in the daily Internet population from mid-year 2000. As illustrated in Mr. Craig's testimony, a more recent survey of Internet use by Nielsen/Netratings estimates over 169 million Americans were accessing the Internet from home and work in January 2001. As these figures suggest, this tremendous demand significantly increases the demands on networks and requires Qwest to expand its network almost continuously. This requirement already imposes a significant economic burden on Qwest and other local carriers. Requiring reciprocal compensation for Internet traffic

will add to this burden without advancing any public policy interest in Arizona.

Q. CAN YOU GIVE AN EXAMPLE OF WHY LOCAL RECIPROCAL COMPENSATION FOR INTERNET-BOUND TRAFFIC IS NOT APPROPRIATE?

A. Yes. While the access charge exemption applies to all Internet-bound traffic, using the example of a long distance voice call over the Internet is an effective way of demonstrating why reciprocal compensation for interstate calls is not an appropriate alternative for this kind of interstate traffic. Assume that a Qwest customer in Tucson calls an Ameritech customer in Chicago using an ISP and "Voice over IP" software to make the call. These end users can have a 20 minute voice conversation using their computers, the Internet, and special software such as that offered by Net2Phone. If the ISP were connected to a CLEC in Tucson, then the Qwest subscriber's call to Chicago would be first sent to the CLEC in Tucson, and then handed off to the ISP by the CLEC. The ISP would then transport the call to Chicago using the "world-wide web," the Internet backbone network.

In addition to losing access revenues on this call, Qwest would be obligated to pay the CLEC local reciprocal compensation for handing off the traffic to the CLEC. In this scenario, not only would Qwest, the company that serves the retail customer, be unable to recover its costs from the ISP for an interstate call, but under the CLEC advocacy, Qwest would also be required to pay reciprocal compensation to another local provider, the CLEC, for this interstate voice call.

The methods for recovering expenses associated with local calls and interstate calls are very different. Expenses associated with providing local service, including local call termination charges, are traditionally recovered from the local providers' end user. Expenses associated with providing facilities for interstate toll calls are recovered from the long distance carrier through access charges. That carrier, in turn, presumably recovers this charge from its long distance customer. The FCC's access charge exemption precludes recovery by Qwest and the CLEC from the interstate provider.

Qwest recognizes that this is the current state of the FCC's rules and that all local providers must forego this revenue source. The imposition of reciprocal compensation, a local call termination charge, on this interstate call, however, is not a "reasonable alternative". Rather than an alternative for access, this charge is the complete opposite. It is a second penalty for handling the Internet-bound call for the end-user customer. This solution may let one of the two local providers who have jointly participated in connecting this end user to his ISP recover some of its expenses. But it does so to the detriment of the first local provider who now must not only exempt the ISP from any charges, but must also pay the second local company's expenses that it was unable to collect from the ISP because of the ESP exemption.

Q. IS THE COST OF DELIVERING INTERNET-BOUND TRAFFIC INCLUDED IN BASIC RATES?

A. No. Arizona basic rates were set based on a 1993 test year, before significant Internet-bound traffic existed and long before reciprocal compensation for Internet-bound traffic became an issue. An example

using residential rates illustrates that the amount of Qwest's loss associated with reciprocal compensation for Internet-bound traffic depends upon how much any given individual uses the Internet. It is easy to see that reciprocal compensation payments can completely consume the revenues that an incumbent LEC receives from an individual customer through the flat monthly residential rate. In Phoenix, for example, the Commission has set the monthly rate for basic residential service at $13.18. If an Internet subscriber uses the Internet for just one hour a day, the reciprocal compensation payments using the current local call termination rate of 0.0028 in Arizona will total about $5.04 per month, which is 38.2% of the current residential basic rate in Arizona. If an Internet subscriber uses the Internet for three hours a day (for example, to shop, research, or play online Internet games), the reciprocal compensation payments would total about $15.12 and would more than consume the flat monthly rate for basic residential service. Imposing local reciprocal compensation on one-way Internet calls is clearly creating the wrong kind of incentive and will result in a problem that will not go away. Given the growth patterns in Internet usage, as well as the projected growth of Voice over IP telephone, the problem will only get bigger.

Q. WHAT OTHER IMPACTS WOULD RESULT IF THIS COMMISSION WERE TO REQUIRE RECIPROCAL COMPENSATION FOR INTERNET-BOUND TRAFFIC?

A. My example above shows that if Qwest is required to pay reciprocal compensation for interstate, Internet-bound traffic, the amounts that Qwest pays will become a cost of providing local service in Arizona. Inevitably, the local Arizona retail customer will be impacted by these increased costs to subsidize CLECs and their ISPs. If it is unable to do so, the increased

costs will have other impacts. Qwest's shareholders cannot be expected to absorb increased costs imposed upon the business of Qwest as the result of a regulatory decision without any means provided to recover those costs.

It is abundantly clear that the windfall benefits of reciprocal compensation that CLECs, ISPs, and their customers would gain through reciprocal compensation would come at the expense of others. Someone must pick up the tab. CLECs suggest this Commission unjustly identify that someone as Qwest, and ultimately, Qwest's shareholders or customers. Excluding Internet-bound traffic from reciprocal compensation will result in each local provider bearing only its own network expenses for Internet calls and will not lead to having some carriers like Qwest unfairly pay not only their own expenses associated with these calls but also the expenses of other carriers.

V. QWEST CAN IDENTIFY INTERNET-BOUND TRAFFIC

Q. IS QWEST ABLE TO IDENTIFY INTERNET-BOUND TRAFFIC?

A. Yes. Qwest has developed a process to identify and measure Internet-bound traffic. This process involves the use of: (1) the CroSS7 System to collect traffic data for calls; (2) an algorithm that is applied to the CroSS7 data to identify calls with Internet traffic characteristics; and (3) a modem identifier that is used to validate whether the calls identified by the algorithm are, in fact, high-speed modem calls.

Q. PLEASE DESCRIBE HOW QWEST IS ABLE TO IDENTIFY INTERNET-BOUND TRAFFIC.

A. Qwest has implemented the Hewlett-Packard CroSS 7 system designed to capture all set-up and traffic flow information within the Public Switched Telephone Network ("PSTN"). Mr. Craig describes the CroSS 7 system in his testimony. The CroSS 7 system was used by Qwest to measure the traffic exchanged between Qwest and CLECs in Arizona during 2000. The data captured consists of the number of calls and the associated minutes of use ("MOUs") for calls originated by Qwest customers and delivered to CLEC customers in Arizona and also calls delivered by CLECs to Qwest's customers in Arizona.

Qwest has also developed an algorithm to identify modem traffic based on various call characteristics. A detailed description of the model and analysis of the algorithm is provided as Exhibit Qwest 1.6. When Qwest applies this programming logic to the recorded usage, it can identify the traffic that is Internet-bound.

Q. AFTER THE DATA IS ANALYZED THROUGH THE ALGORITHM, IS ALL TRAFFIC CONSIDERED INTERNET-BOUND TRAFFIC?

A. No. Qwest uses another process - the modem identifier process - to further filter modem calls. This process determines if the called telephone number is associated with voice, analog modem, ISDN modem, or facsimile. Qwest uses this step to remove data calls that may not be directed to an ISP. A description of the modem identifier process is attached as Exhibit Qwest 1.7.

Q. WHY IS THE MODEM IDENTIFIER PROCESS IMPORTANT?

A. This process identifies modems that are associated with facsimile transmission and eliminates the associated traffic from the data MOU to derive the Internet-bound traffic.

Q. HOW ARE MODEMS ASSOCIATED WITH FACSIMILE TRANSMISSION IDENTIFIED?

A. Facsimiles usually transmit at a baud rate of less than 1000 bits per second. Minutes associated with transmission rates of less than 1000 bits per second are removed from the data traffic analysis.

Q. WHAT DO THE CROSS 7 RESULTS SHOW WITH RESPECT TO THE TRAFFIC EXCHANGED BETWEEN QWEST AND CLECS IN ARIZONA?

A. The CroSS7 system measured almost 11.6 billion minutes that were exchanged between Qwest and CLECs in Arizona during 2000. See Exhibit LB-5. Of this total, over 10.3 billion minutes were calls from Qwest customers to CLEC customers and only 1.3 billion minutes were calls from CLEC customers to Qwest customers. To put this data into perspective, over 89% of the traffic exchanged between Qwest and CLECs originated from a Qwest customer and was delivered to a CLEC customer. The CroSS7 data further identified that over 85% of the over 10.3 billion minutes delivered to CLECs were Internet-bound minutes. This imbalance of traffic flow between companies is completely the opposite of the historic patterns of local telephone companies such as Qwest, and other independent telephone companies exchanging customer calls in Arizona over the past several decades.

1 Another compelling statistic is that of the 8.8 billion Internet-bound minutes,
2 the modem identifier process identified only 554 telephone numbers that
3 are associated with these minutes. Each telephone number received over
4 43,600 Internet-bound minutes per day. These numbers bear out what is
5 happening in Arizona with respect to Internet-bound traffic.

6 **Q. WHAT IS THE SIGNIFICANCE OF QWEST'S MEASUREMENT OF THIS**
7 **TRAFFIC?**

8 A. This measurement shows that Qwest can, in fact, identify Internet-bound
9 traffic; and the traffic patterns establish that the bulk of minutes exchanged
10 with CLECs are clearly for ISPs, not end-users. There is no policy reason
11 for the Arizona Commission to order reciprocal compensation for Internet
12 traffic as competition for ISP business clearly already exists in this area.

13 **Q. CAN YOU ESTIMATE THE AMOUNT OF INTERNET-BOUND TRAFFIC**
14 **QWEST WILL DELIVER TO CLECS THAT WOULD BE SUBJECT TO**
15 **RECIPROCAL COMPENSATION UNDER THE CLECS' PROPOSAL?**

16 A. Based upon the trend in Internet-bound traffic in 2000, Qwest estimates
17 that it will deliver 10.8 billion Internet-bound minutes to CLECs in 2001 a
18 22.2% increase over 2000.

19 **Q. WHAT ARE QWEST'S RECOMMENDATIONS FOR THE APPROPRIATE**
20 **APPLICATION OF RECIPROCAL COMPENSATION IN ARIZONA?**

21 A. Qwest believes that reciprocal compensation should apply only to local
22 traffic exchanged between local carriers. Qwest does not believe that any
23 Arizona public policy objective is served by including Internet-bound traffic
24 in reciprocal compensation. Internet-bound traffic is interstate in nature

and, therefore, should be subject to interstate access charge compensation. The fact that the FCC has indefinitely exempted ESPs from access charges does not mean that Internet-bound traffic should now somehow qualify as local traffic or be subject to local reciprocal compensation. Indeed, local telephone companies already are bearing the burden of originating Internet-bound traffic without compensation. Paying the CLEC, in addition to the costs that Qwest already does not recover for Internet traffic, adds nothing to local competition beyond the competition for ISP business so as to generate one-way traffic from Qwest's network.

VII. APPLICATION OF TANDEM AND END OFFICE RECIPROCAL COMPENSATION RATES WHEN A CLEC SWITCH QUALIFIES AS A TANDEM

Q. HAS THE FCC ADOPTED REGULATIONS ADDRESSING TANDEM CRITERIA FOR THE PAYMENT OF THE TANDEM INTERCONNECTION RATE?

A. Yes. FCC Rule 51.711(a)(3) states:

> Where the switch of a carrier other than an incumbent LEC serves a geographic area comparable to the area served by the incumbent LECs tandem switch, the appropriate rate for the carrier other than an incumbent LEC is the incumbent LEC's tandem interconnection rate.

Q. IS QWEST REQUESTING THE COMMISSION TO DETERMINE IF A CLEC SWITCH PERFORMS TANDEM FUNCTIONS IN THIS PROCEEDING?

A. No. Whether or not a CLEC switch qualifies for treatment as a tandem is a factual matter that should be addressed in each case. But where a CLEC switch is determined to qualify under FCC Rule 51.711 (a)(3), how these reciprocal compensation rates should be applied needs to be addressed.

Q. WHAT IS QWEST'S PROPOSAL FOR PAYING RECIPROCAL COMPENSATION WHEN THE CLEC QUALIFIES FOR TANDEM RATES?

A. When a CLEC switch qualifies as a tandem, the parties should pay each other at either the tandem or end office rate depending on whether the LIS trunks between the two companies connect to a tandem or end office Qwest switch.

Q. DOES THE ACT REQUIRE A RECIPROCAL RATE STRUCTURE FOR TRANSPORT AND TERMINATION?

A. Yes. Section 251 (b)(5) of the Act established a duty on all local exchange carriers, not just incumbents, to "establish reciprocal compensation arrangements for the transport and termination of telecommunications."

Q. HOW DOES THE FCC ADDRESS SYMMETRICAL RATES?

A. At Paragraph 1089 of the FCC's First Report and Order, the FCC concludes as follows:

> Given the advantages of symmetrical rates, we direct states to establish preemptive symmetrical rates based on the incumbent LEC's costs for transport and termination of traffic when arbitrating disputes under Section 252(d)(2) and in reviewing BOC statements of generally available terms and conditions. If a competing local service provider believes that its costs will be greater than those of the incumbent LEC for transport and termination, then it must

> submit a forward-looking cost study to rebut this presumptive symmetrical rate. In that case, we direct state commissions, when arbitrating interconnection arrangements to depart from symmetrical rates only if they find that the costs of efficiently configured and operated systems are not symmetrical and justify a different compensation rate. In doing so, however, state commissions must give full and fair effect to the economic costing methodology we set forth in this order, and create a factual record, including the cost study, sufficient for purposes of review after notice and opportunity for the affected parties to participate. In the absence of such a cost study justifying a departure from the presumption of symmetrical compensation, reciprocal compensation for the transport and termination of traffic shall be based on the incumbent local exchange carrier's cost studies.

Q. PLEASE DESCRIBE DIRECT TRUNKED LIS.

A. Direct trunked Local Interconnection Service ("LIS") is an uninterrupted path between two end offices. Direct LIS trunks link a Qwest end office directly to a CLEC end office without requiring the CLEC to pay for tandem switching. The transport facility originates at the point of interconnection between the Qwest network and the CLEC network and terminates at the Qwest switch; it provides a direct path between the CLEC switch and the Qwest end office for the exchange of local traffic and does not connect to or pass through the Qwest tandem switch. The interconnection agreements provide that the parties shall order LIS directly to the end office when a sufficient volume of traffic is reached in keeping with sound network engineering principles.

Q. PLEASE DESCRIBE TANDEM-SWITCHED TRANSPORT.

A. Tandem-switched transport links two or more end offices through a tandem switch. By way of example, tandem-switched transport connects a CLEC switch to a Qwest end office wire center through an intermediate Qwest

tandem switch. The LIS facility originates at the point of interconnection between the Qwest network and the CLEC network and terminates at the Qwest tandem switch. Tandem trunks connect the tandem switch to each end office switch in the local calling area. These trunks are considered common trunks because the trunks are not dedicated to the CLEC's use, but instead are used "in common" by many carriers, including Qwest, independent local exchange carriers, and CLECs. The combination of switching at the tandem switch and the common trunks is the tandem-switched transport that allows the CLEC access to every central office connected to the local tandem switch for the exchange of local traffic. LIS ordered to a local tandem will carry two charges, the tandem switching and tandem-switched transport charge and the end office call termination charge.

Q. WHEN IS DIRECT TRUNKED LIS REQUIRED?

A. The Interconnection Agreements requires direct trunked LIS when either forecasts or actual traffic at a CLEC's busy hour exceeds a DS1's worth of traffic (512 CCS) between a CLEC's switch and a Qwest end office.

Q. DOES QWEST BELIEVE IT SHOULD BE REQUIRED TO PAY TANDEM SWITCHING RATES WHEN A CLEC HAS DIRECT TRUNKS TO A QWEST END OFFICE?

A. No. Qwest believes it is inappropriate to pay tandem switching rates when a CLEC has a direct trunked LIS group to a Qwest end office. The Act as well as the FCC has addressed the issue of symmetrical rates for reciprocal compensation. When a CLEC has a direct trunk group to a Qwest end office, Qwest charges the CLEC only the end office element not the tandem

switching rate. For the rate structure to be truly symmetrical, the CLEC should also be required to charge only the end office rate element to Qwest and not impose tandem rates on this traffic. The CLEC should impose tandem rates for connections between the Qwest tandem and the CLEC switch assuming this Commission makes a determination their switch should be treated as a tandem. But only end office rates should apply for traffic that is on LIS trunks directly connected to a Qwest end office. Only end office rates are being charged by Qwest on this traffic and only end office rates should be charged by the CLEC on these trunks.

VIII. TELECOMMUNICATION SERVICES AVAILABLE FOR RESALE

Q. PLEASE DESCRIBE QWEST'S SERVICES AVAILABLE FOR RESALE.

A. The finished retail telecommunications services that Qwest provides to its end-users are also made available by Qwest to resellers for sale to their end users. The reseller is the "customer of record" of a resold service, and all interactions regarding the service take place between Qwest and the reseller. The reseller's end user interacts only with the reseller. Services that Qwest provides directly to a reseller for the reseller's own use that are not resold to end users, such as administrative services, are not subject to the resale discount rate.

Q. WHAT SECTIONS OF THE ACT DESCRIBE THE REQUIREMENTS FOR RESALE?

A. The requirements for resale are set forth at sections 251(c)(4) and 252(d)(3). Section 251(c)(4)(A), which is quoted below, sets forth the fundamental requirement that a local exchange carrier must offer for resale

any "telecommunications service" that the carrier provides to its retail subscribers. Accordingly, in determining which services a local exchange carrier should offer, the critical inquiry is whether a particular service is a telecommunications service that is offered at retail.

Q. WHAT ARE THE EXPRESS REQUIREMENTS OF SECTION 251(C)(4)?

A. The express language of section 251(c)(4) is as follows:

> RESALE -- The duty -- (A) to offer for resale at wholesale rates any telecommunications service that the carrier provides at retail to subscribers who are not telecommunications carriers; and (B) not to prohibit, and not to impose unreasonable or discriminatory conditions or limitations on, the resale of such telecommunications service, except that a State commission may, consistent with regulations prescribed by the Commission under this section, prohibit a reseller that obtains at wholesale rates a telecommunications service that is available at retail only to a category of subscribers from offering such service to a different category of subscribers.

Q. WHAT ARE THE REQUIREMENTS OF SECTION 252(D)(3) OF THE ACT?

A. Section 252(d)(3) establishes the methodology for local exchange carriers and state commissions to follow in establishing wholesale prices for the telecommunications services that are offered for resale. Qwest witness, Marti Gude, who presents Qwest's avoided cost study and resale discounts, describes the practical significance of the language that Congress used in section 252(d)(3) for calculating resale discounts. As she discusses, that section makes clear that resale discounts are to be calculated by analyzing the costs that go into a retail rate and then determining which of those costs the local exchange carrier will avoid selling the service at wholesale:

WHOLESALE PRICES FOR TELECOMMUNICATIONS SERVICES. -- For the purposes of section 251(c)(4), a State commission shall determine wholesale rates on the basis of retail rates charged to subscribers for the telecommunications service requested, excluding the portion thereof attributable to any marketing, billing, collection, and other costs that will be avoided by the local exchange carrier.

Q. IS QWEST PROVIDING FOR RESALE THE TELECOMMUNICATIONS SERVICES THAT IT OFFERS TO RETAIL SUBSCRIBERS WHO ARE NOT TELECOMMUNICATIONS CARRIERS?

A. Yes. The general categories of services that Qwest provides for resale are Basic Exchange Telecommunications Service, Basic Exchange Features, and IntraLATA Toll. Qwest is providing to resellers all of the retail end user *telecommunications* services it currently offers. Consistent with the requirements of the Act, resellers may sell these services only to the same class of end users to which Qwest sells such services (*e.g.,* residence service may not be resold to business end users). While the vast majority of Qwest's retail services are available for resale, there are some non-telecommunications services, such as enhanced services, inside wiring, and Customer Provided Equipment ("CPE"), that QWEST does not offer for resale. Qwest does offer grandfathered services and promotional offerings subject to the applicable limitations defined in the FCC's rules.

Q. DOES QWEST PLAN TO OFFER ENHANCED SERVICES FOR RESALE?

A. No. QWEST does not plan to offer enhanced services for resale, since Section 251(c)(4) of the Act, as interpreted in the FCC's First

1 Interconnection Order,[10] requires only that "telecommunications services"
2 be made available for resale. Enhanced services are "information
3 services," not telecommunications services. The resale of enhanced
4 services would adversely impact end user customers because it would
5 reduce the number of enhanced services available by removing incentives
6 for both incumbents and resellers to invest in new services.

7 **Q. ARE THERE OTHER SERVICES QWEST PROPOSES TO EXCLUDE**
8 **FROM RESALE?**

9 A. Yes. Certain services are not telecommunications services and, therefore,
10 are not required to be available for resale. These include the following:

11 • Interstate Switched Access service;

12 • Intrastate Switched Access service;

13 • Third Party Billing and Collection;

14 • Wireless Interconnect Access;

15 • E911;

16 • Mobile;

17 • Public Access Lines (PAL); and

---

[10] In the Matter of Implementation of the Local Competition Provisions in the Telecommunications Act of 1996, FCC 96-325, CC Docket Nos. 96-98, 95-185, First Report and Order at ¶ 692 (Rel. August 6, 1996) ("First Report and Order").

- Unbundled and Wholesale Services.

Q. HOW DOES QWEST PROPOSE TO OFFER OBSOLETE OR GRANDFATHERED SERVICES TO RESELLERS?

A. If a service is obsolete, it is no longer available for purchase by new Qwest retail customers. However, existing Qwest customers who subscribed to a service before it became obsolete can continue to purchase the service on a grandfathered basis. Consistent with the FCC's First Report and Order,[11] if a Qwest customer who is purchasing a grandfathered service from Qwest changes it service to a reseller, that customer can continue to purchase the service from the reseller. The reseller, in turn, can purchase the service from Qwest. However, Qwest will not make obsolete services available to resellers for customers who do not already subscribe to a grandfathered service.

Q. PLEASE DESCRIBE QWEST'S PROPOSAL REGARDING PROMOTIONAL OFFERINGS.

A. Qwest does not make promotional offerings available for resale at a wholesale discount. This approach is consistent with the FCC's directive that "short term promotional prices do not constitute retail rates for the underlying services and thus are not subject to wholesale rate obligation."[12] The FCC has explained further that short term promotional rates may last a

[11] First Report and Order at ¶ 968.

[12] First Report and Order at ¶ 949.

1 maximum of 90 days,[13] and that any promotional offerings that extend
2 beyond 90 days represent a retail rate and shall be available to resellers.

3 **Q. HOW DOES QWEST PRICE THE SERVICES AVAILABLE FOR RESALE**
4 **AT A DISCOUNT?**

5 A. As discussed in the testimony of Marti Gude, the resale discounts that
6 Qwest applies to the services it offers for resale are based upon the costs
7 that go into a retail rate that Qwest avoids when it sells a service at
8 wholesale. These avoided costs may relate to, for example, certain costs
9 relating to marketing, billing and collections. This method for calculating
10 discounts complies with the express requirements in section 252(d)(3). Ms.
11 Gude discusses in detail the types of costs that Qwest does and does not
12 avoid selling telecommunications services at wholesale.

13 **Q. DOES QWEST PROVIDE WHOLESALE SERVICES AT AN ADDITIONAL**
14 **RESALE DISCOUNT?**

15 A. No. Services that Qwest currently provides on a wholesale basis at
16 wholesale rates are not discounted further based on avoided costs. The
17 Act only requires application of the avoided cost discount to retail services.
18 If Qwest were to apply a discount to wholesale services, there would be a
19 double counting of avoided costs and Qwest would not recover the costs it
20 incurs to provide the service.

---

[13] 47 C.F.R. §51.613

Q. PER QWEST'S RESALE PROPOSAL, CAN A RESELLER NEVERTHELESS PURCHASE THESE END USER WHOLESALE SERVICES?

A. Yes. Resellers can purchase these wholesale services from Qwest. For example, a reseller can purchase discounted toll optional calling plan from Qwest and resell the service to a particular end user customer. However, since the service is already provided on a discounted wholesale basis, the reseller should not receive an additional "avoided cost" discount. Alternatively, the reseller can purchase the standard, non discounted retail offering at a price that reflects the full retail rate less the avoided cost discount.

IX. CUSTOMER TRANSFER CHARGE (CTC)

Q. WHAT IS QWEST'S PROPOSAL FOR APPLICATION OF THE CUSTOMER TRANSFER CHARGE?

A. Customer Transfer Charge ("CTC") should apply when an end-user customer's POTS Service, Private Line Transport Service or Advanced Communication Service is transferred from Qwest to a CLEC. A separate nonrecurring CTC is applicable for each service transferred to a CLEC. The nonrecurring charge applicable to these services is listed in Exhibit MA-1 of Ms. Arnold's testimony.

Q. PLEASE DISTINGUISH THE TERMS "POTS" AND "ADVANCED COMMUNICATIONS SERVICES."

A. POTS (Plain Old Telephone Service) is basic residential and business service. Advanced Communications Services include Frame Relay, ATM Cell Relay and Transparent LAN Service.

X. NUMBER PORTABILITY

Q. PLEASE DESCRIBE QWEST'S LOCAL NUMBER PORTABILITY SERVICE.

A. Qwest's Local Number Portability Service allows an end user to retain the same telephone number, at the same location, without impairment of quality, reliability, or convenience when switching from Qwest to a CLEC.

Q. WHAT CHARGES APPLY FOR LOCAL NUMBER PORTABILITY?

A. The charge for Local Number Portability is the charge Qwest has filed with the FCC in its Tariff FCC No. 1, Access Service, Section 13.

XI. 911 SERVICE

Q. PLEASE DESCRIBE QWEST'S 911 SERVICE.

A. Qwest's 911/E911 service automatically routes a CLEC's end user's 911 call directly to the appropriate Public Safety Answering Point.

Q. WHAT CHARGES APPLY FOR 911 SERVICE?

A. 911 Service is provided to the CLEC at no charge.

XII. WHITE PAGES DIRECTORY LISTINGS

Q. PLEASE DESCRIBE QWEST'S WHITE PAGES DIRECTORY LISTINGS SERVICE.

A. Qwest's White Pages Directory Listing places the names, addresses, and telephone number of CLEC end users in Qwest's listing database, based on end user information provided to Qwest by the CLEC. Qwest will provide primary, premium, and private listings as defined in its Arizona Exchange and Network Services Tariff

Q. WHAT CHARGES APPLY FOR QWEST'S WHITE PAGES DIRECTORY LISTINGS?

A. Qwest will provide primary listings at no charge to the CLEC. However, if the CLEC's end user requests a premium or private listing, e.g., additional, foreign, cross reference, non-list or non-published, the CLEC is assessed the rate contained in the Arizona Exchange and Network Service Tariff less the wholesale discount.

XIII. DIRECTORY ASSISTANCE

Q. PLEASE DESCRIBE QWEST'S DIRECTORY ASSISTANCE SERVICE.

A. Qwest's Directory Assistance service is a telephone number, voice information service that Qwest provides to its own end users and to other telecommunications carriers. Qwest provides CLECs non-discriminatory access to Qwest's directory assistance centers, services, and directory assistance databases.

Q. WHAT CHARGES APPLY FOR QWEST'S DIRECTORY ASSISTANCE SERVICE?

A. There are five distinct charges for Directory Assistance Service. The first is the local directory assistance charge. This is a per call to the directory assistance center charge. The second is the national directory assistance charge. This also is a per call charge. The third is the Call Branding, Set-up and Recording charge to announce the CLEC's name to the CLEC's end user at the start and completion of the call. This is a non-recurring charge to load the CLEC's branding message in each switch. The fourth is the Loading Brand charge. This is the per switch non-recurring charge to load the CLEC branding messages in each switch. The fifth is the Call Completion Link charge. This is a per call charge to allow, where available, the CLEC end user to be returned to the CLEC for completion on the CLEC's network. The charges applicable to these services are listed in Exhibit MA-1 of Ms. Arnold's testimony.

XIV. DIRECTORY ASSISTANCE LIST INFORMATION

Q. PLEASE DESCRIBE QWEST'S DIRECTORY ASSISTANCE LIST INFORMATION.

A. Qwest's Directory Assistance List Information consists of name, address, and telephone number information for all end users of Qwest and other LECs that are contained in Qwest's directory assistance database and, where available, related elements required in the provision of Directory Assistance service to CLEC end users. In the case of end users with non-published listings, Qwest shall provide the end user's local numbering area ("NPA"), address, and an indicator to identify the non-published status of

the listing to the CLEC; however, Qwest will not provide the non-published telephone number.

Q. WHAT CHARGES APPLY FOR QWEST'S DIRECTORY ASSISTANCE LIST INFORMATION?

A. There are five distinct charges for Directory Assistance List Service. The first is the Initial Database Load. This is a per listing charge for the initial loading of the directory listing data at the time the request is received. The second is the Reload of Database charge. This is a per listing charge to update the directory listing database. The third is the Daily Update charge. This is a per listing charge to update the directory listing database on a daily basis. The fourth charge is the One-Time Set-up Fee. This is a per hour charge for special database loads requested by the CLEC. The fifth is the Output charge. This is either a per listing or per tape charge to provide the Directory Assistance List Information electronically or via a tape. The tape output has additional shipping charges for tape delivery. The charges applicable to these services are listed in Exhibit MA-1 of Ms. Arnold's testimony.

XV. TOLL AND ASSISTANCE OPERATOR SERVICES

Q. PLEASE DESCRIBE QWEST'S TOLL AND ASSISTANCE OPERATOR SERVICES.

A. Qwest's Toll and Assistance Operator Services is a family of six offerings that assist end users in completing EAS/local and long distance calls. Local Assistance provides CLEC end users the necessary help or information on placing or completing EAS/local calls, connects CLEC end users to home

NPA directory assistance, and provides other information and guidance, including referral to the business office and repair. IntraLATA Toll Assistance directs CLEC end users to contact its provider to complete interLATA toll calls. Emergency Assistance provides CLEC end users the necessary help to complete EAS/local and IntraLATA toll calls to emergency agencies, including but not limited to, police, sheriff, highway patrol and fire departments. Busy Line Verification allows a calling party, with the assistance from the operator bureau, to determine if the called line is in use. Busy Line Interrupt allows the operator to interrupt a telephone call in progress to inform the called party that there is a call waiting. The operator will not connect the calling and called parties. Quote Service provides time and charges to hotel/motel and other CLEC end users for guest/account identification.

Q. WHAT CHARGES APPLY FOR QWEST'S TOLL AND ASSISANCE OPERATOR SERVICES?

A. Qwest Toll and Assistance Operator Services are offered under two pricing options. Option A offers a per message rate structure. Option B offers a work second and a per call structure. Option A rate elements assess a per message charge for Operator Handled Calling Card, Machine Handled Calling Card, Station Call (e.g., 0- calls, third number billing, and collect calls), Person Call, Connect to Directory Assistance, Busy Line Verification, Busy Line Interrupt, and Operator Assistance. Option B rate elements assess a per work second charge for Operator Handled calls, Machine Handled calls, and non-recurring charges for Call Branding, Set-up and Recording, and Loading Brand-per switch. The charges applicable to these services are listed in Exhibit MA-1 of Ms. Arnold's testimony.

XVI. CONCLUSION

Q. PLEASE SUMMARIZE YOUR TESTIMONY.

A. My testimony describes why this commission should clearly and unequivocally reaffirm its earlier decision that local companies are not required to pay reciprocal compensation to other local companies for ISP-bound traffic. The FCC has made it clear that ISP-bound traffic is interstate in nature. The recent growth in long distance voice calls over the Internet only confirms this. Requiring the payment of reciprocal compensation on ISP-bound traffic is both illogical and counter to the public policy goals of increasing local competition. Including such payments is contrary to public policy objectives. The benefits gained by CLECs, ISPs and their customers, through reciprocal compensation subsidies, come at the expense of Qwest's residential and business customers that may or may not generate any Internet traffic. For the reasons stated above, the ISP exclusion from local reciprocal compensation proposed by Qwest should be adopted.

The rates for the customer transfer charge and ancillary services are cost based and should be approved.

In addition, whether or not a CLEC switch qualifies for treatment as a tandem is a factual matter that should be addressed in each case. If a CLEC switch is determined to qualify under FCC Rule 51.711 (a)(3), the parties should pay each other reciprocal compensation at either the tandem or end office rate depending on whether the LIS trunks between the two companies connect to a tandem or end office Qwest switch.

1 Finally, the telecommunications services that are available for resale and
2 the resale discount, Customer Transfer Charge, Number Portability, 911
3 Service and Operator and Directory Services as I have described should be
4 adopted as I have described them.

5 **Q. DOES THIS CONCLUDE YOUR TESTIMONY?**

6 A. Yes.

BEFORE THE ARIZONA CORPORATION COMMISSION

CARL J. KUNASEK
CHAIRMAN
JIM IRVIN
COMMISSIONER
WILLIAM A. MUNDELL
COMMISSIONER

IN THE MATTER OF INVESTIGATION	)	
INTO U S WEST COMMUNICATIONS,	)	**DOCKET NO. T-00000A-00-**
0194		
INC'S COMPLIANCE WITH CERTAIN	)	**PHASE II**
WHOLESALE PRICING REQUIREMENTS	)	
FOR UNBUNDLED NETWORK	)	
ELEMENTS AND RESALE DISCOUNTS	)	

EXHIBITS OF

LARRY B. BROTHERSON

QWEST CORPORATION

MARCH 15, 2001

INDEX OF EXHIBITS

DESCRIPTION	EXHIBIT
ISP TRAFFIC IS ANALOGOUS TO ACCESS TRAFFIC	LB-1
IMBALANCE OF TRAFFIC	LB-2
ISP IDENTIFICATION PROJECT	LB-3
MODEM IDENTIFIER	LB-4
ISP TRAFFIC DATA	LB-5

ISP Traffic Is Analogous to Access Traffic

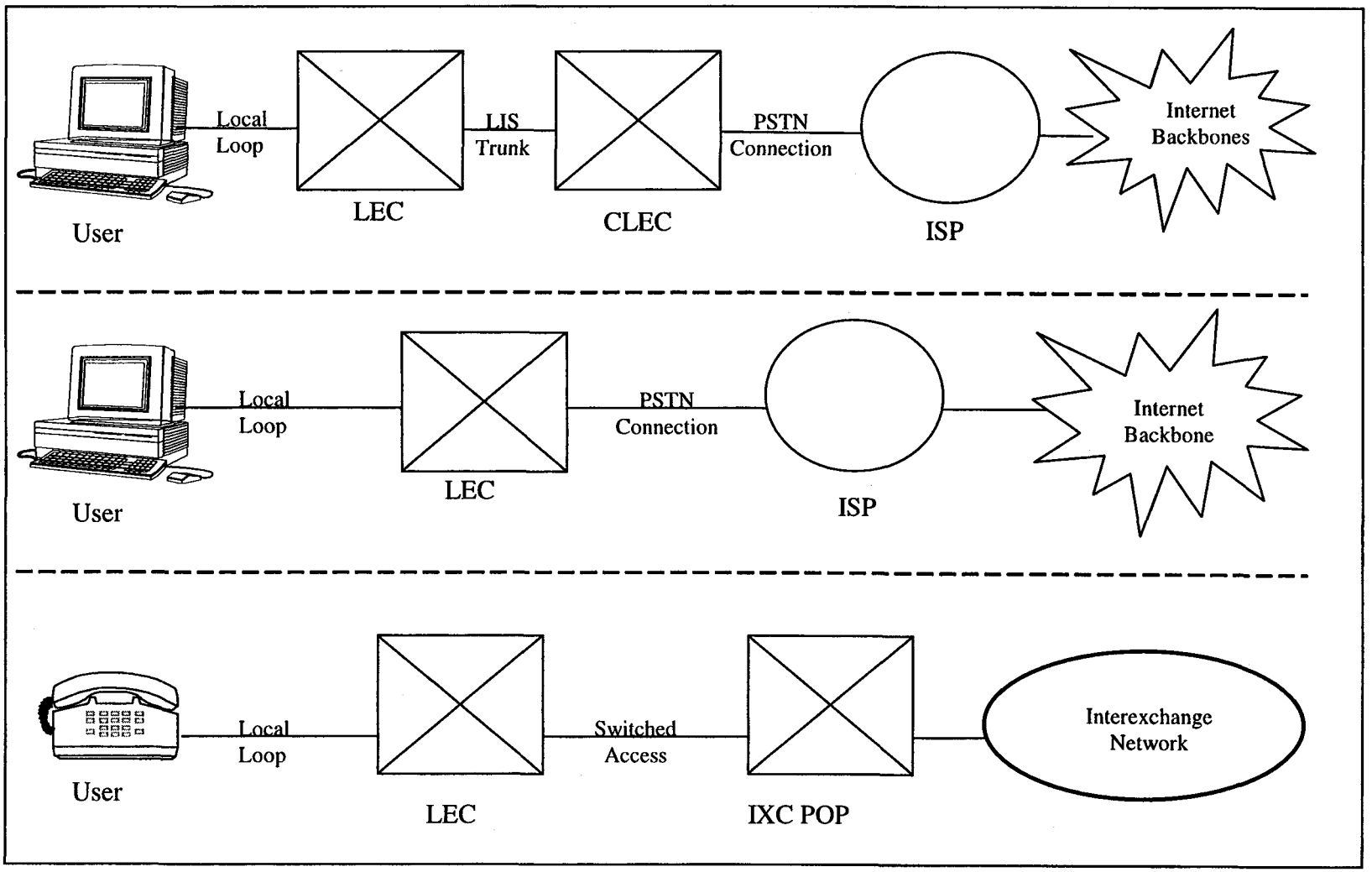

IMBALANCE OF TRAFFIC

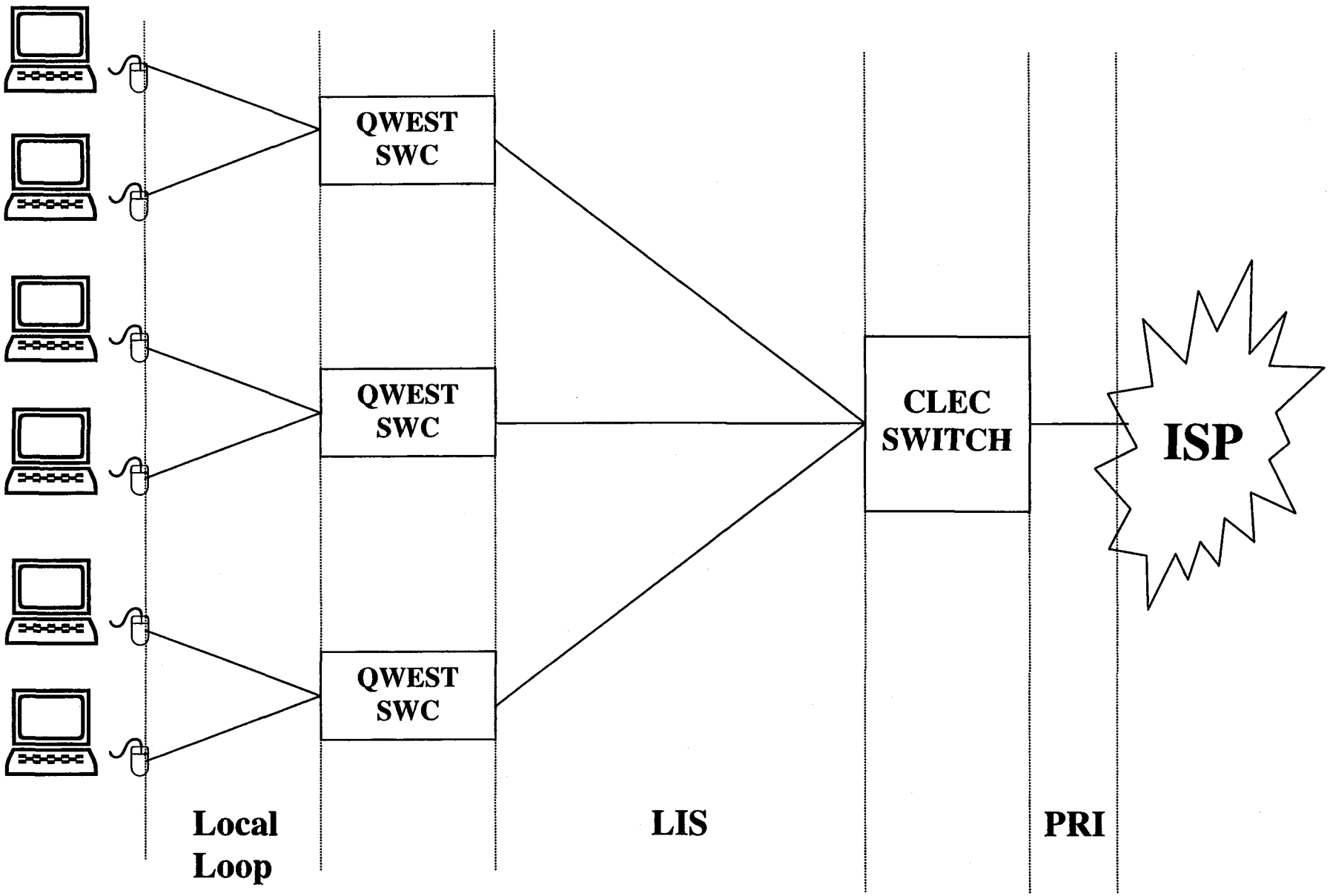

U S WEST Advanced Technologies

To: Karen Chandler-Ferguson

From: Jim Koehler, MTS -- Mathematical and Statistical Modeling
(303) 541-6805 jkoehle@uswest.com

CC: Jasmin Espy, Ken Gittins, Carolyn Hammack, and Ricky Berger

Date: June 16, 1999

Re: Final Report on ISP Identification Project

Executive Summary

This report presents the results of the **ISP Identification** Project. This project has developed an *identification process* using traffic information from the CroSS 7 system to classify terminating phone-numbers as either modems or non-modems.

- A sample of CroSS 7 data was collected to develop a modem-classification algorithm. These data consist of phone-call information to over 418,000 (terminating) phone-numbers and includes almost seven million phone calls with over 68 million combined minutes of use.

- An extensive effort found that 376 of these terminating phone-numbers were modems. A statistical classification algorithm captures **99.7%** of these modems (or 375) and only 26 non-modem numbers hence eliminating over **99.99%** of the non-modem terminating-phone numbers. In terms of Minutes of Use (MOU) this classification algorithm captures 99.99% of total modem-MOU. Of the total MOU the algorithm classified as modem traffic only 0.86% is actually non-modem.

- These performance numbers can be improved by implementing a **Modem Identifier.** The Modem Identifier is a computer program that can dial the terminating phone-numbers identified as modems by the classification algorithm. The program tries to make a connection using modem protocols to verify these numbers are actual modems. To give accurate classifications the modem identifier should be run with a person verifying the results by listening for ISDN modems, disconnected numbers, no answers, and busy tones.

- As a side benefit of this study the following extrapolations can be made about the total modem traffic involving these CLECs:

  - CLEC 1 in Minnesota -- 97.7% of the MOU passed to CLEC 1 is modem (estimated to be1,894 million MOU per year).

- CLEC 2 in Nebraska – 0% of the MOU passed to CLEC 2 is modem while 41.8% of the MOU received from CLEC 2 was modem (estimated to be 75 million MOU per year).
- CLEC 3 in Colorado – 91.8% of the MOU passed to CLEC 3 is modem (estimated to be 1,164 million MOU per year) while 24.8% of the MOU received from CLEC 3 was modem (estimated to be 16 million MOU per year).

- **Cautions**: While the project's goal was to identify ISPs it was modified to identify modems since it is impossible accurately and thoroughly identify ISPs even for a small sample. While fax machines were eliminated there may be other modems that do not carry internet traffic (e.g., local networks). Also, while the CroSS 7 data for the terminating phone-numbers used in this study are complete there may be other terminating phone-numbers not represented in this sample and therefore the CLEC extrapolations given above may need modification.

Background

Wholesale Markets long-range plan forecasted $35 million in 1998 for the ability to terminate intrastate calls to Competitive Local Exchange Carriers (CLECs). These payments, known as reciprocal compensation, have increased in 1999. Some of these calls terminate to Internet Service Providers (ISPs). However, the Federal Communications Commission (FCC) declared in February, 1999 that "Internet traffic is jurisdictionally mixed and appears to be largely interstate in nature. ...the calls at issue in this proceeding do not terminate at the ISPs' local servers, but continue to their ultimate destinations, specifically at websites that are often located in other states or countries. As a result, the Commission found that, although some Internet traffic is intrastate, a substantial portion of Internet traffic is interstate and therefore subject to federal jurisdiction."[1] While this ruling does not settle the issue of internet traffic and reciprocal compensation it does open the door to future rulings at both the state and federal level. These rulings could lead to substantial financial savings if US WEST can identify CLEC phone numbers that are ISPs or otherwise carry internet traffic.

Wholesale Markets has implemented the CroSS 7 system that captures traffic information and creates billing records. These records can help determine if CLEC terminating phone-numbers are ISP or non-ISP by exploring their call characteristics. This report presents the results of a study to find an objective modem-classification routine using CroSS 7 data.

First, a sample of data collected from the CroSS 7 system was processed into informative traffic statistics. Second, an extensive effort was undertaken to correctly classify the terminating phone-numbers for these data as either modem or not-modem.

[1] FCC Report No. CC 99-2 (2/25/99). (http://www.fcc.gov/Bureaus/Common_Carrier/News_Releases/1999/nrcc9014.html)

And lastly, a classification model was developed using Classification and Regression Trees (CART). The details of the sample data, model development, and model performance are given below.

Data

The sample data from the CroSS 7 system contain one week of call information for calls starting during the week of 1/24/99 to 1/30/99 for three CLECs:

- CLEC 1 in Minnesota. These data have only traffic terminating to CLEC 1 customers.
- CLEC 3 in Colorado. These data have traffic both originating from and terminating to CLEC 3 customers.
- CLEC 2 Communications in Nebraska. These data have traffic both originating from and terminating to CLEC 2 customers.

The following data fields were collected:

- Call Code – This is the direction of traffic: 110 = to CLEC, 119= from CLEC.
- Call Date
- Originating Phone-Number
- Terminating Phone-Number
- Call Success Indicator (0= successful call, 1= call not successful)
- Call Conversation Minutes of Use
- Call Conversation Connect Time (in minutes from midnight – e.g., 3:05am = 185.0)

In aggregate, these data consist of 6,951,521 phone calls to 418,786 terminating phone-numbers with a total of 68,568,304 Minutes of Use (130 years).

An extensive effort was undertaken to create one last variable for a subset of these terminating phone-numbers that were likely candidates to be modems. This variable is the

- Terminating Phone-Number Modem-Indicator (1= Modem, 0= Non-Modem)

The methods used to determine this classification include checking web sites for ISP dial-up access numbers, checking the ISP Location Report (from the ISP Marketing Group), manual calling, and using a *Modem Identifier.* The Modem Identifier is a

computer program that dials a given list of phone numbers and tries to make a connection using modem protocols. If a connection is achieved the number is identified as a modem. To give accurate classifications the modem identifier was run with a person verifying the results by listening for ISDN modems, disconnected numbers, no answers, and busy tones.

Methodology

Pre-screen

The traffic data for the 418,786 terminating phone-numbers were processed into two variables: Average Holding Time (AHT) in minutes and Total Minutes of Use (TMOU). A *pre-screen* was applied to exclude terminating phone-numbers with TMOU less than 2500 minutes per week or with AHT less than 5 minutes per call. This criterion was chosen to eliminate terminating phone-numbers that are unlikely to be modems and/or have little impact on reciprocal compensation (less than $1000 / year). This culled the data down to 501 terminating phone-numbers. The numbers were further reduced down to 473 during the modem classification process since 28 of these numbers had been disconnected, were constantly busy, or never answered.

Modem-Classification Model

The data for these 473 terminating phone-numbers were used to build a classification model using Classification and Regression Trees (CART). In addition to AHT and TMOU, two additional variables for this model are needed: Number of Callers (Ncaller) and Average Minutes of Use per caller (AMOU). CART uses a tree-like decision structure to optimally split the data into two groups using the explanatory variables. At each "node" of the decision tree, the algorithm uses one of the explanatory variables to split the data into two branches. This process is repeated until further splitting will not reduce the number of misclassified observations. The original tree contained 24 nodes with 22 misclassified observations. Since CART models tend to over-fit their data, I pruned this tree back to only four modes with only 27 misclassified terminating phone-numbers. More details on the performance of this model are given below in the *Performance Section* while more details on the modem-classification model development are given in Appendix 2.

Figure 1 displays the tree-structure of the combined pre-screen and modem-classification model. In summary, a terminating phone-number is classified as a modem if the Total Minutes of Use per week (TMOU) is greater than or equal to 2500

minutes, the Average Call Holding Time (AHT) is greater than or equal to 5 minutes, and the Average Minutes of Use per caller per week (AMOU) is greater than or equal to 46.1 minutes. The only exception to this are terminating phone-numbers that additionally have fewer than 6 Callers and Average Call Holding Times less than 12 minutes.

The pre-screen and modem-classification models were developed favoring the modem misclassification rate over the non-modem misclassification rate. To compensate for this the Modem Identifier should be utilized as a post-screen. That is, after the pre-screen and modem-classification models have provided a list of terminating phone-numbers that are likely to be modems, the Modem Identifier should be run on this list to eliminate any non-modems. Typically, for any CLEC this list should consist of only a few hundred phone-numbers.

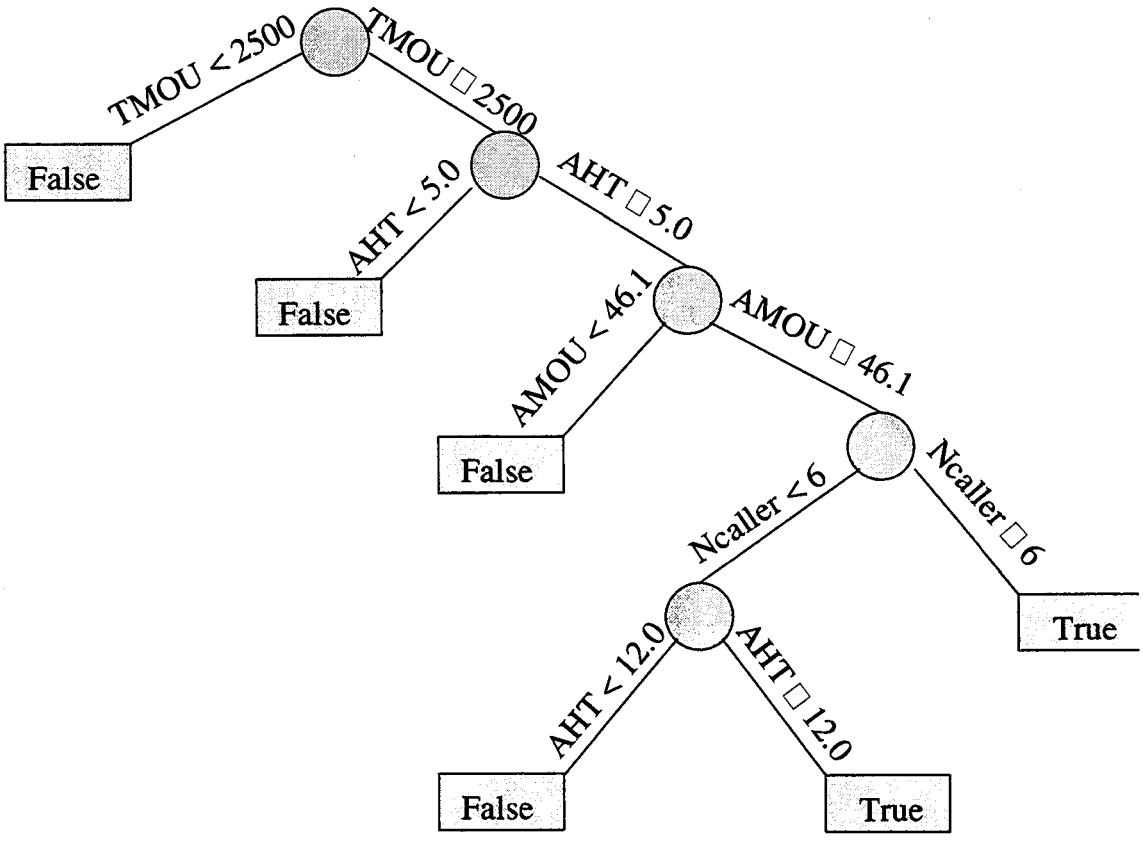

Figure 1. The Modem Classification Tree.

Performance

Overall, the modem-classification algorithm, including the pre-screen, classifies as modems **99.7%** of all known modems (or 375 out of 376) and only 26 non-modem numbers hence eliminating over **99.99%** of the non-modem terminating-phone numbers. In terms of Minutes of Use (MOU) this classification algorithm captures 99.99% of total modem-MOU. Of the total MOU the algorithm classified as modem traffic only 0.86% is actually non-modem. The results are summarized in Tables 1 and 2.

In particular, for these data, the pre-screen and modem-classification model would provide a list of 401 modem candidates. Out of this list 26 or 6.5% are non-modems. Using this list we would estimate there are 61,094,298 Modem-MOU for the week. In reality there are 60,573,343 Modem-MOU for the week. Therefore our estimate is too high by 0.86%. In fact, since the modem-classification routine was developed using these data we should expect higher error rates for future data. The cross-validation techniques discussed below suggest these error estimates should be 26% higher. *We should therefore expect in practice that 8.2% of the modem-candidate list will be non-modems and the associated Modem-MOU estimate will be too large by 1.08%.*

		Predicted		
		Modem	Non-Modem	Total
Actual	Modem	375	1	376
	Non-Modem	26	418,384	418,410
	Total	401	418,385	418,786

Table 1. Classification results for terminating phone-numbers (all sample data).

		Predicted		
		Modem	Non-Modem	Total
Actual	Modem	60,567,487	5,856	60,573,343
	Non-Modem	526,811	7,468,150	7,994,961
	Total	61,094,298	7,474,006	68,568,304

Table 2. Classification results for all sample data in terms of Total Minutes of Use.

The modem-classification model was developed using only 473 observations. The classification results for just this model are given in Table 3. The results are slightly optimistic (5.7% misclassification rate or 27/473) since CART models usually over-fit their data. Cross-validation techniques are a method where a subset of the data are

dropped from the model building exercise and reserved to validate the predictive ability of the built model. This process is repeated with different subsets left out. For this model, the cross-validation technique predicts, for a future dataset of equal size, that 34 observations will be misclassified. This is 26% higher (35/27 = 1.26) and therefore the overall misclassification rate for future observations will be 26% higher for an overall 7.2% misclassification rate.

		Predicted		
		Modem	Non-Modem	Total
Actual	Modem	375	1	376
	Non-Modem	26	71	97
	Total	401	72	473

Table 3. Classification results for only the modem-classification model.

Algorithm Specifications

The following steps are required to create a modem-candidate list for a specific CLEC (for one direction):

1. Create a file containing CroSS 7 call-record data for all successful calls that are terminated (originated) from (to) that CLEC during seven consecutive days. This one-week period should not include any holidays or other days that produce unusual traffic. This file should contain at least the following for each call:

   - Originating Phone-Number
   - Terminating Phone-Number
   - Call Conversation Minutes of Use
   - Call Date
   - Call Conversation Connect Time

2. Sort this file by terminating phone-number and for each unique terminating phone-number sum the Call Conversation Minutes of Use. This sum will be denoted as the Total Minutes of Use (**TMOU**).

3. Use the following algorithm for each terminating phone-number:

   IF TMOU < 2500.0 minutes THEN Classify as *Non-Modem*
   ELSE
   Compute the Total Completed Peg Count (**TCPC**). This is the total number of successful calls to this terminating phone-number. Also compute the Average Holding Time (**AHT**) by AHT= TMOU / TCPC.
   IF AHT < 5.0 minutes THEN Classify as *Non-Modem*
   ELSE
   Compute the total number of callers (**Ncaller**). This is the number of unique originating phone-numbers that successfully completed a call to this terminating phone-number. Also compute the Average Minutes of Use per caller (**AMOU**) by AMOU = TMOU / Ncaller.
   IF AMOU < 46.1324 THEN Classify as *Non-Modem*
   ELSE
   IF Ncaller ≥ 6 THEN Classify as *Modem*
   ELSE
   IF AHT < 12.031 THEN Classify as *Non-Modem*
   ELSE Classify as *Modem*

4. Verify the modem-candidate list by running the Modem Identifier program.

Appendix 1 – CLEC Specific Results

This section summarizes the results specific to the three CLECs:

- CLEC 1 in Minnesota. These data have only traffic terminating to CLEC 1 customers.
- CLEC 3 in Colorado. These data have traffic both originating from and terminating to CLEC 3 customers.
- CLEC 2 Communications in Nebraska. These data have traffic both originating from and terminating to CLEC 2 customers.

Table 4 summarizes the total number of terminating phone-numbers, the total number of phone calls, and total minutes of use by CLEC and direction.

CLEC	Direction	Number of Terminating Phone-Numbers	Number of Calls	Total Minutes of Use
CLEC 1	To	19,316	2,097,436	37,283,710
CLEC 2	To	17,527	786,171	2,176,374
CLEC 2	From	127,296	884,643	3,485,357
CLEC 3	To	36,829	2,521,076	24,401,533
CLEC 3	From	217,818	662,195	1,221,330
Total		418,786	6,951,521	68,568,304

Table 4. Summary statistics by CLEC and direction.

As a side benefit of this study the following extrapolations can be made about the total modem traffic involving these CLECs:

- CLEC 1 -- 97.7% of the MOU passed to CLEC 1 is modem (estimated to be 1,894 million MOU per year).
- CLEC 2 – 0% of the MOU passed to CLEC 2 is modem while 41.8% of the MOU received from CLEC 2 was modem (estimated to be 75 million MOU per year).
- CLEC 3 – 91.8% of the MOU passed to CLEC 3 is modem (estimated to be 1,164 million MOU per year) while 24.8% of the MOU received from CLEC 3 was modem (estimated to be 16 million MOU per year).

Appendix 2 – Analysis Details

This appendix describes further details about the model development including the investigation into a pre-screen, variables investigated for their discriminating ability, and models employed for ensuring the data quality and for building the final model.

Initial Data and the Pre-Screen

The first data collected were from CLEC 1. Every terminating phone-number with Peg Count (call attempts) greater than 800 for the week were manually called to determine if the numbers were voice or data (this group includes faxes). Websites of Internet Service Providers in Minnesota were inspected for dial-up access numbers. Later the Modem Identifier was run on the "data" phone numbers to exclude faxes and verify the classification results.

Two-dimensional plots using Minutes of Use (MOU), Average Hold-Times (AHT), and Total Weekly Peg-Count (TPC) were utilized to determine the criterion for the pre-screen. The motivation behind the pre-screen was to eliminate as many non-modems as possible while retaining most of the modems. The data for CLEC 1 had only three terminating phone-numbers identified as modem with less than 2500 MOU. Since 2500 weekly-MOU translates to only $1040 per year (= 2500 MOU/week * 52 week/year * .008$/MOU) reciprocal compensation, the lost modems were deemed insignificant.

Second Data

The second data were from CLEC 3 and CLEC 2. These terminating phone-numbers were classified primarily by using the Modem Identifier. However, as indicated below there were some adjustments made to these classifications during the model building exercises.

Note: For the 119 data there were numerous calls to NPAs outside of their respective LATAs. Future data request should not use Module 44 to eliminate these calls.

Variables Investigated

The combined CroSS 7 call-record data, for those terminating phone-numbers that passed the pre-screen, were processing into the following variables selected for their possible ability to discriminate between modem and non-modem traffic.

1. Average Hold Time (AHT) – this variable was originally to be the average hold time during weekday evening hours. However, many terminating phone-numbers had no phone calls during this period and their values would be missing. Therefore, this variable is defined as the average minutes of use where the average is over all successful phone calls initiated during the sample week. Typically modem traffic has higher Average Hold Times.

2. Percentage of completed phone calls during business hours. This variables is the proportion of successful phone calls initiated during business hours, defined here as Monday-Friday from 8am – 5pm, to the total number of successful phone calls. Typically, modems will have smaller values for this variable. This variable was also helpful in identifying 27 misclassified modems.

3. Total Completed Peg Count (TCPC) – this variable which is the total number of successful phone calls in a week is not very helpful on its own in identifying modem traffic

4. Total Minutes of Use (TMOU) – this is the total minutes of use terminating to a phone-number during the sampled week. It also appears to be not very help by itself in identifying modems, at least not for high volume phone numbers. However, it is the most important variable in the pre-screen.

5. Success Rate – this is the ratio of completed phone calls to call attempts and attempts to measure average blockage. However, blockage is time dependent and can affect both modems and non-modems alike. This variable was of limited value.

6. Number of Callers (Ncaller) – this is the number of unique originating numbers that successfully completed a call during the sample week. This variable is only marginally helpful on its own but plays an important role in combination with other variables.

7. Average Number of Completed Peg Counts per User (Caller) per Week – this variables appears to be an important variable on its own but it loses its discriminating ability when used in conjunction with other variables.

8. Percentage of Callers with 5 or more Completed Peg Counts per Week – this variable tries to capture the number of repeat callers to a modem. By itself it has good discriminating ability.

9. Average Minutes of Use per Caller per Week (AMOU) – This variable captures a combination of long call-hold times and repeat callers. It has great discriminating ability both by itself and in conjunction with other variables.

Collectively, these variables are called the *independent* variables and were used to predict the modem classification. Many of these variables (all but 2, 5, and 8) were given a log transformation when applied to models that require normally distributed data. These transformations were determined by inspecting plots of nonparametric density estimates using a Gaussian kernel.

Models Considered

I utilized four statistical models to help develop the final classification model:

- Principal Components – This multivariate technique helps identify and explain the true dimensionality of many variables. That is, it identifies linear sub-spaces of the data that have maximal variability of the projected data. Conversely, it finds linear sub-spaces of the data that have little variability of the projected data. The number (or dimensionality) of the maximal variability sub-spaces indicates the true dimensionality of the variables. The relative loadings of the independent variables

can indicate which of the independent variables are important. For this problem, the modem and non-modem independent variables were analyzed separately. Each indicated that only five of the nine independent variables were informative.

- Cluster Analysis – This multivariate technique helps identify clusters of observations that have similar independent variables. This technique can be used to identify the number of different classes or patterns in the data. It does not use the classification information. For the combined data, this analysis indicated that there were three main clusters of data with seven other minor clusters. Interestingly, the three main clusters contained 425 or the 473 observations and by using "majority-voting" would have misclassified only 35 of these 425 observations. This analysis also led me to discover seven misclassified modems.

- Linear and Quadratic Discriminant Analysis – These tools attempt to discriminate between classes by splitting the independent-variable space into two (or more) groups using a linear and quadratic decision rule, respectively. These techniques work best with multinormal data. Using an iterative process I discovered that Linear Discriminant Analysis was preferred using variables 1, 2, 6, 7, and 9. However, the misclassification rate (39 / 473) was larger than CART and the interpretation of this model is more difficult.

  I also performed a robustness study by eliminating the seven observations with the highest leverage values (the largest outliers). The results did not significantly change indicating that the data contains no influential observations and therefore the model estimates are stable.

- Classification and Regression Trees (CART) – This technique uses a tree-like decision structure to optimally split the data into two (or more) groups using the explanatory variables. At each "node" of the decision tree, the algorithm uses one of the explanatory variables to split the data into two branches. This process is repeated until further splitting will not reduce the number of misclassified observations. The original tree contained 24 nodes with 22 misclassified observations. Since CART models tend to over-fit their data, I used cross-validation techniques to determine that the optimal tree size had four nodes. Therefore, I pruned this tree back to only four nodes with only 27 misclassified terminating phone-numbers. Cross-validation techniques also indicate that the true misclassification rate should be 26% higher. That is, for a future dataset with 473 observations we should expect a total of 34 of these observations to be misclassified.

Modem Identifier (MI)

Design Documentation

Date: **October 18, 1999**

Author: **Ying-li Wu** (yxwu2@uswest.com)
Interactive Services Test and Automation
U S WEST Advanced Technologies

TESTIMONY OF DICK BUCKLEY
TABLE OF CONTENTS

		Page
	EXECUTIVE SUMMARY	i
I.	**INTRODUCTION**	1
II.	**GENERAL**	2
III.	**PLACEMENT COSTS**	11
IV.	**SHARING**	24
V.	**PLANT MIX**	29
VI.	**FILL FACTORS**	30
VII.	**CONCLUSION**	34

EXECUTIVE SUMMARY

My name is Dick Buckley, and I am employed by Qwest Corporation as a Manager-Loop Cost Analysis. In my testimony, I describe the Loop Module (LoopMod) of the Integrated Cost Model (ICM). The purpose of LoopMod is to produce the investment for a subscriber loop and drop wire that can be used as a basis for developing costs for pricing decisions.

LoopMod is a replacement for the Regional Loop Cost Analysis Program (RLCAP), which was first developed in 1988. The program has evolved over the years in order to reflect current outside plant technologies, Qwest Network guidelines and TELRIC principles. Over the last several years, the model has been through extensive internal and external reviews. Much of the feedback from those reviews dealt with improving the "user friendliness" of the model, including the ability of the users to vary certain data within the model. Based on this feedback, Qwest has modified LoopMod to increase its user-friendliness. The modifications also affect the manner in which feeder plant is developed, the ability to identify distribution investments on a more specific basis, and the disaggregation of various inputs to the model, such as inputs relating to the methods for placing outside plant and inputs for drop lengths. This disaggregation of inputs allows users to change the input values that are used in the model. In addition, Qwest has performed routine updates of LoopMod to ensure that the model remains current with respect to prices, technology, line counts, and other issues. The network

philosophy that underlies the model remains the same. The model and its data inputs still follow these network-related criteria:

1. The model assumes the use of technology that is forward-looking and commercially available.
2. Demand and sizing are based on the total quantity of potential unbundled loop customers. The total network approach provides economies that would not exist in a model that reflects only near-term demand and construction.
3. The methods used for placing outside plant are selected based on conditions in the existing environments, with buildings, roads, and other structures assumed to remain in place.
4. Plant utilization levels are realistic and reflect actual experience in Arizona.

Based on these criteria, the model uses copper cables in certain areas because that design is the least-cost solution to building basic voice grade circuits. The model also utilizes integrated TR-303 Digital Loop Carrier where that technology is appropriate. Cables and systems are sized to accommodate the universe of demand (total potential unbundled loops), and there is recognition that to install cables, a new entrant or an incumbent local exchange carrier (ILEC) rebuilding the network will require several different types of placing methods. Finally, the model incorporates plant utilization levels that are realistic and achievable.

Using these guidelines, the model complies with appropriate standards for engineering design and service quality and produces a level of investment that is appropriate for use in estimating the costs that should underlie the pricing of the unbundled loop.

I. INTRODUCTION

Q. PLEASE STATE YOUR NAME AND BUSINESS ADDRESS.

A. My name is Dick Buckley. I am employed by Qwest Corporation as a Manager-Loop Cost Analysis. My business address is 1801 California St. #2040, Denver Colorado.

Q. PLEASE DESCRIBE YOUR EDUCATION BACKGROUND AND EMPLOYMENT EXPERIENCE.

A. In 1978, I received a B.A. in Business Administration with an emphasis in Finance from the University of Northern Colorado. I joined Qwest (Mountain Bell) in 1980 in the Cost Rates and Regulatory Matters (CRRM) department as a Cost Analyst in the area of data and supplemental terminal products. In 1983, I assumed responsibility for non-recurring costing and for implementing the Dual Element non-recurring cost structure. In 1986, I moved into cost analysis of the local loop and assisted in the development of the Regional Loop Cost Analysis Program (RLCAP) and the current Qwest loop program, LoopMod. My present responsibilities include local loop cost modeling and analysis, as well as providing subject matter expert support on local loop costing in regulatory proceedings.

Q. WHAT IS THE PURPOSE OF YOUR TESTIMONY?

A. The purpose of my testimony is to provide information concerning the updates and changes to the Loop module (LoopMod) of the Integrated Cost model (ICM) that Qwest implemented in the release of LoopMod Version 2. LoopMod replaces the RLCAP V3.5

model that Qwest (then U S WEST) filed in the 1997 Arizona Interconnection Cost Docket. I also discuss the rationale underlying the input assumptions that Qwest has used in developing the investments for the loop and drop portions of the local loop unbundled network element in its TELRIC study.

II. GENERAL

Q. PLEASE DESCRIBE THE LOOPMOD MODEL.

A. LoopMod is an investment development program designed by Qwest. The purpose of LoopMod is to produce the investment for a subscriber loop and drop wire that can be used as a basis for developing costs used in pricing decisions. LoopMod calculates the investments for loop and drop wire based on standard engineering loop designs, vendor prices and placement cost estimates. These investments include the costs associated with the materials, construction and engineering that are required to build loop plant from the central office to a subscriber. The investment amounts that the model uses are based primarily on data specific to Arizona. For example, the quantity of lines in service, the prices charged by contractors for outside plant construction activities and the distribution area data are unique to Arizona. After LoopMod calculates the investment, the results can be converted to monthly costs used to make pricing decisions for the unbundled loop.

Q. WHAT ARE THE KEY ELEMENTS IN QWEST'S ASSUMPTIONS RELATING TO NETWORK DESIGN THAT ARE USED IN LOOPMOD?

A. There are two key cost drivers in Qwest's network design assumptions for developing Arizona-specific loop plant investment: 1) distance and 2) population density. Feeder investments are affected directly by the amount of distance from a serving central office (CO) to an end user. Longer distances require the placement of more feeder plant than shorter distances. Population density affects the type of outside plant and placement methods that can be used and also influences the selection of the distribution design for an area. The density of the Distribution Area (DA) is a function of the size of the serving area and the number of customers within the area. Higher density provides for greater economies of scale. For example, in feeder, higher density allows the use of larger cables, while in distribution, higher density results in shorter cabling.

Q. HOW IS THE LOOP DESIGN SEGMENTED?

A. Each loop design is divided into two sections: feeder cable and distribution cable.

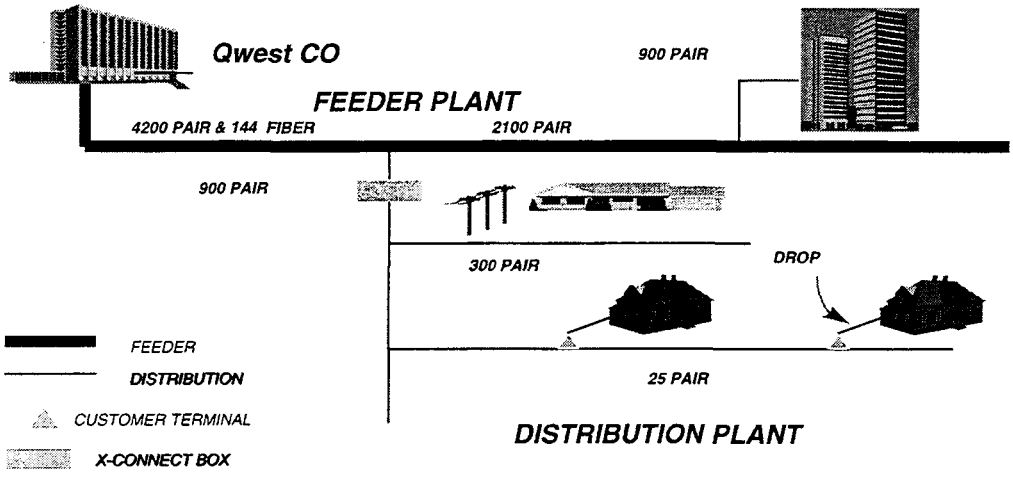

As shown in the diagram, feeder is the main facility leaving the central office. The feeder is typically a large copper cable or a fiber facility. If the facility is fiber, it is used to connect electronics at the central office with electronics at a location on the feeder route. Feeder cables are often placed within conduit, and they are designed to be reinforced periodically. Distribution plant consists of smaller cables that connect to the feeder plant at a Serving Area Interface (SAI) or cross-connect box. As the name implies, these cables distribute pairs from the feeder plant to the customer locations. In most cases, the distribution cables are buried directly into the ground. A small percentage of the distribution cables are placed through the use of aerial plant, although the use of aerial plant has generally been on the decline in recent years. In addition to the SAI and the cables, distribution plant includes pedestals or customer terminals, drop or service wires

and network interfaces. The terminals serve as a connection point between the distribution cables and the drop wire. The drop wire is the piece of distribution plant that runs directly to a customer's premises. The network interface device (NID) provides the connection between the drop and the inside wiring at a customer's premises.

Q. HOW DOES THE MODEL ARRIVE AT AN APPROPRIATE FEEDER DESIGN?

A. The model employs an economic mix of copper and fiber facilities based on user-selected breakpoints. The breakpoints determine the distances at which the model transitions between technologies and placement assumptions. Each route in each wire center is analyzed to determine the amount of demand and the distance that demand is from the serving central office. This approach in LoopMod is an enhancement from the average wire center group feeder designs used in RLCAP V3.5. This route-specific information is used in conjunction with the breakpoint between copper and fiber to size the required electronics and cable facility. The design inputs determine the appropriate distances at which outside plant is placed in conduit systems versus buried placement in both urban and rural settings. The model also allows the user to differentiate costs for urban-buried placement versus rural-buried placement. Urban-buried feeder utilizes trenching activities appropriate for a more densely populated area, while the model uses a greater degree of lower cost plowing techniques to place rural-buried feeder. After the feeder plant is determined for each route, the quantity for each equipment type and the length by cable demand (fibers or pairs) and placement mode is added to the study total. Once all plant requirements are determined, the model applies the cable sizing factors to the

demand to select the appropriate cables. The model then develops investments for the total feeder plant and divides the total investment by the working lines to determine an investment amount per line.

Q. HOW DOES THE MODEL ARRIVE AT AN APPROPRIATE DISTRIBUTION DESIGN?

A. Qwest developed distribution plant profiles based on the Qwest Network distribution architectures. The guidelines for these architectures conform to the industry "serving area concept" design. The distribution area is a concise geographic area. It has a single interface point, and it typically serves 200 to 600 locations. The distribution cabling is a single gauge and is free of multiple assignments. The primary pairs are permanently assigned to a location and are cut off beyond the assignment point. LoopMod incorporates five distribution designs or density groups.

Density Group 1

Density Group 2

Density Group 3

Density Group 4

Density Group 5

These designs represent: (1) high rise buildings, (2) multi-building / multi-tenant scenarios, (3) single family with standard lot sizes, (4) single family with larger lots and (5) rural serving areas. Each individual Arizona Distribution Area (DA) is mapped to one of the Density Group (DG) designs based on the size of DA (area in square miles) and information relating to the size and type of terminals included in the DA. The area information is also used to adjust the cable length data for the distribution designs that are lot size oriented (DG3, DG4 and DG5). The adjusted distribution designs thus reflect the unique density that exists within each DA. After the model processes each DA, it weights the DA investments together based on their proportionate share of total working lines. By using this weighting, the actual Arizona-specific occurrence of distribution designs is reflected in the loop investments. This is another enhancement from the RLCAP V3.5 model used earlier in Arizona. The investments for the distribution plant are added to the feeder investments to determine the total outside plant investments. To arrive at the total investment for an unbundled loop, the model also adds investments associated with loop unbundling at the central office.

Q. WHAT ARE THE KEY INPUTS ASSOCIATED WITH THE MODEL?

A. There are numerous inputs that have an impact on the final investment developed by LoopMod, but two of the key cost drivers are:

- Cable placing activities
- Structure sharing percentages

- Plant mix

These inputs are discussed more fully later in my testimony. Care must be taken to ensure consistency in the assumptions made with regard to these inputs. In addition, the assumptions must reflect the reality of what costs a carrier will face if it were replacing the Arizona telephone network in the world as it exists today - - with buildings, houses, roads, and other structures still in place. It would make little sense to develop a business case on building a network and ignore the environment in which it will be built. The numbers would not provide the information necessary to make an intelligent decision on the profitability of the project.

Q. HAS QWEST ATTEMPTED TO VALIDATE THE COST ESTIMATES THAT LOOPMOD PRODUCES?

A. Yes. There have been a variety of steps taken to provide validation of the LoopMod results. First, the Law and Economics Consulting Group (LECG), under the guidance of Dr. Robert Harris, conducted an extensive review of the model's economic rationales and program logic. LECG's review led to certain modifications to ensure compliance with TELRIC guidelines. In addition, the LoopMod results were compared to various other studies of local loop investment in an effort to determine if they are within a range of reasonableness. The comparative investments are summarized below:

	Investment
Qwest TELRIC[1]	$988
LoopMod - Loop only	$884
Revised HAI Model 5.0a - Loop only	$872

BCPM (Capped) - Loop only	$896
BCPM (Uncapped) - Loop only	$957
Qwest Embedded Loop Investments	$1,053
SM - Revised inputs - Loop only	$787

This data provides evidence that Qwest's cost studies produce reasonable estimates of the average investment for a local loop. The HAI data has been developed using the HAI Model 5.0a with the inputs revised to more closely reflect those utilized in the LoopMod program. The SM data is developed using the FCC SM and revised inputs (where they were a comparable structure) that matched the LoopMod inputs.

Q. WHAT CHANGES DID QWEST MAKE TO UPDATE LOOPMOD?

A. The changes include simple updates of data (such as material prices, loop quantities), mechanical adjustments (sharing percentages, placement activities by Density Group), and changes to make the model more user friendly. These changes will be discussed in detail later in my testimony. I have listed below the most notable of these adjustments.

- Updated user screens
- Increased user variability of inputs
- User adjustable sharing percentages
- Updated investments and contract placing costs

[1] This investment includes MDF and loop grooming equipment in addition to the loop facilities.

- Route-specific feeder modeling
- State-specific distribution design weightings
- Distribution designs adjusted to each DA
- Buried placement cost by Density Group and Feeder location
- Elimination of cost calculations (now in the Integrated Cost Model)

III. PLACEMENT COSTS

Q. WHAT ARE CABLE PLACEMENT COSTS?

A Cable placement costs are the costs of placing cable in the ground or on poles. These costs, along with the costs of splicing and other labor-related activities, are the single largest component of outside plant costs. On average, more than 60% of Qwest's total investment in buried cable is related to the cost of placing the cable.

Q. WHAT TYPES OF WORK ACTIVITIES ARE INVOLVED IN CABLE PLACEMENT?

A Consistent with actual engineering practices, LoopMod includes four methods for placing buried cable. These methods are trenching, plowing, boring, and cut & restore. Trenching involves digging a trench, placing the cable directly into the trench and back-filling the trench. The plowing method places cable by directly plowing it into the ground without digging a trench. Boring involves the use of equipment that literally bores cable through the ground in situations where, for example, cable must pass underneath a road, a

sidewalk or a yard. The advantage of directional boring is that it avoids the costs and disruption that arise from tearing up roads, sidewalks, yards, and other structures. Cut & restore involves placing cable by digging up roads, yards, and other structures and then restoring those structures after the cable has been placed.

In addition, LoopMod includes subcategories that further differentiate these activities. For trenching, LoopMod identifies different costs for trench & backfill, rocky trench and hand dig. For plowing, LoopMod includes different costs for standard plowing, rocky plowing and plowing with hydro/broadcast seed restoration. The cut & restore category has different costs for concrete, asphalt, and sod.

Q. WHAT DETERMINES WHICH TYPE OF PLACEMENT ACTIVITY WILL BE USED WHEN BUILDING OUTSIDE PLANT FACILITIES?

A The primary determinant is typically density. For instance, if buried cable is being placed in a low-density area, along a county road with few obstacles, it is very likely that the construction crew will be able to plow the cable. In a new subdivision, before curbs, gutters and landscaping are placed, trenching machines can be used for standard trench and backfill placement. Once the density increases (e.g. a mature suburban neighborhood), placement activities such as boring need to be used to avoid damaging streets, sidewalks and landscaping. If boring is not used, then cut & restore techniques must be used to repair areas disturbed during the trench work.

Q. WHAT CHANGES DID QWEST MAKE TO THE MODEL RELATING TO BURIED CABLE PLACEMENT ACTIVITIES AND COSTS?

A LoopMod V2 contains two significant changes relating to the placement of buried cable. First, the program now recognizes the use of contractors to place cable in the buried environment. (The activity costs contained in the program are taken from the current network contracts with vendors who perform placement of buried plant in Arizona.) The second change is the disaggregation of the placement costs by Density Group and by Feeder-Urban versus Feeder-Rural. (This reflects the impact that density has on the placement methods that an engineer would choose.) Accordingly, each of the categories of buried plant (Density Group 1 (DG1), DG2, DG3, DG4, DG5, Feeder-Urban and Feeder-Rural) now has its own placement activity matrix, and therefore, reflects the percentage of trenching, boring, cut & restore asphalt, etc. that is reasonable for the associated density. The default values in LoopMod Version 2 are attached as Exhibit RJB-3 to my testimony.

Q. DID QWEST MAKE CERTAIN ASSUMPTIONS WHEN IT DERIVED THE PLACEMENT COSTS USED IN THE LOOPMOD MODEL?

A. Yes, Qwest assumed that the model should reflect the cost of:

1. extending service to all of its current Arizona customers; and
2. using the type of cable placing techniques that an outside plant engineer would use to build a replacement network in Arizona.

As the first assumption suggests, the model is designed to determine the forward-looking costs of all loops, not just those placed in any given year.

Q. HOW DO THESE ASSUMPTIONS AFFECT CABLE PLACEMENT COSTS?

A. In developing the forward-looking cost of a telecommunications network designed to serve all customers, the model must recognize the world as it currently exists. The model includes all the current lines in service so as to recognize the economies of scale that would be achieved by a single service provider. The model also uses the latest technologies so as to include the efficiencies those technologies provide. The model must also recognize the methods that would be required to place the new technologies and economically sized facilities. Most of the houses in Qwest's Arizona service territory are in neighborhoods that are already developed. These neighborhoods have streets, driveways, fences, sprinkler systems and landscaping. A company that wishes to replace or build a new network to serve these households would need to negotiate around, through or under these obstacles to place its cable facilities. This would require the use of special construction techniques, such as cut and restore asphalt or concrete, boring, cut and restore sod and hand trenching. These techniques increase the cost of placing the cable. The Qwest TELRIC model was designed to reflect these realities of placing cable in developed neighborhoods. On the other hand, the model also includes the use of low cost placement, such as cable plowing, where the density allows the use of those methods.

Q. WOULD A FORWARD-LOOKING MODEL PRODUCE COSTS THAT ARE GREATER THAN THE HISTORICAL COSTS?

A. It depends on the circumstances. The forward-looking cost of building facilities will include some economies over those costs that were incurred when the facilities were originally placed. This is because in a forward-looking network, the feeder routes are designed to meet the total current demand, plus a reasonable amount of growth. In contrast, from a historical perspective, feeder was placed to meet demand for up to five years, after which it had to be reinforced. A forward-looking model, such as LoopMod, won't reflect these reinforcement costs, because the feeder can be sized to meet all current demand, plus reasonable growth. Similarly, the outside plant network design in the model reflects the optimal use of the latest electronic circuit equipment. This equipment often is less expensive than equipment that Qwest used in the past and has greater capabilities than some of the equipment currently in use in the QWEST network.

Despite these potential cost reductions, the forward-looking costs of a network nevertheless could be higher than historical costs, because labor is generally more expensive today than it was historically, as reflected on the company's books. Moreover, copper cable prices are commodity-driven rather than technology driven. In other words, cable prices are more likely to change based on the commodity cost of copper rather than due to technological changes in the cable itself. This is in contrast to the cost decreases or feature enhancements that technological innovations have brought to the computer (or network switching) industry. The Qwest models attempt to reflect both the economies

and diseconomies that would occur if the network were rebuilt. Inconsistent treatment of these various economies and diseconomies would lead to erroneous results.

Q. HOW ARE THESE ECONOMIES AND DISECONOMIES REFLECTED IN THE LOOPMOD?

A. The economies and diseconomies are reflected primarily through the treatment of four variables:

1. Loop lengths;
2. Feeder design;
3. Technology; and
4. Placement costs.

The purpose of the model will determine how it treats these variables. The variables will differ between a model used for embedded analysis of the network and one that is used to determine the costs for a total replacement. For example, if a model is used to estimate the cost of adding new lines to the network, the loop lengths will be longer than those of the existing lines. This is because growth tends to occur on the undeveloped outskirts of the service area. Most of the areas in close proximity to the central offices have been developed. Similarly, feeder routes are frequently reinforced as new lines are added to the network. A model designed to estimate the cost of adding new customers to the network would reflect the economies of building primarily in the undeveloped areas but would also include the diseconomies of longer loops and feeder cables sized to serve only the new lines.

Conversely, a model designed to estimate the total cost of rebuilding the network, such as a TELRIC model, would have different characteristics. LoopMod contains the economies of the latest technologies and cables sized to serve the total demand. It also includes the universe of loop lengths, not just those being placed for the lines being added to the network. To maintain consistency of assumptions, though, LoopMod recognizes that placement costs will be different in mature, developed areas than they are in new growth areas. The four variables above must be treated in a manner that is internally consistent in order for a cost model to produce meaningful results. For example, one cannot assume the cost to install plant in a new area while including the loop lengths for the existing customers.

Q. HOW DOES FEEDER DESIGN DIFFER BETWEEN NEW CONSTRUCTION AND A COST MODEL THAT ASSUMES A TOTAL REBUILD OF THE NETWORK?

A. Feeder routes are frequently reinforced to meet growing demand. These reinforcements are designed to allow for approximately two to three years of additional growth. A new network would be built to account for all lines at once. Feeder routes could be designed and constructed once, eliminating the periodic reinforcement costs that occur in the existing network. Building one feeder system to serve all customers optimizes the economies of scale that can be achieved, reducing the cost per customer. LoopMod includes these economies in the feeder cable designs.

Q. HOW WOULD PLACEMENT COSTS VARY BETWEEN NEW CONSTRUCTION IN AN EXISTING NETWORK AND A COMPLETE REPLACEMENT OF THE NETWORK?

A. New "growth" distribution areas typically occur in undeveloped areas. In these areas, there are no roads, no sprinkler systems, no sidewalks, no landscaping, no fences, and, typically, no yards. As a result, placement of plant in these areas is less costly, and there is more opportunity to share structures. In existing developed areas, all these obstacles must be negotiated around or under or replaced when the construction is completed. Obviously, this significantly increases the costs of placing cable. LoopMod includes a percentage of aerial plant that is based on what exists in the network today. This assumption reflects the fact that aerial plant is usually replaced with other aerial plant because of the cost savings that result from the initial placement of aerial versus buried plant. However, it must be recognized that, as a percentage of total cable sheath mileage, aerial plant is in decline. This is due to both aesthetics and maintenance concerns. Aerial plant is more vulnerable to the elements and results in higher maintenance expenses.

Q. WOULD A LARGE PERCENTAGE OF THE NETWORK REPLACEMENT CONSTRUCTION OCCUR IN NEW OR UNDEVELOPED AREAS?

A. The majority of the distribution construction would occur in developed areas if the network were completely replaced. Feeder plant placement would also be more likely to occur in developed areas in a network replacement. The percentage of lines that would be

in undeveloped areas is dependent on the planning period and the growth rate assumed in the study and must be consistent with the other design assumptions.

Q. WHY ARE THE DIFFERENCES IN THE CHARACTERISTICS OF NEW LOOP CONSTRUCTION AND A REBUILD OF THE TOTAL NETWORK CRITICAL IN DETERMINING REASONABLE COSTS?

A. It is the interplay between all of these variables that determines the reasonableness of the cost estimates. If the assumptions are consistently applied, the resulting cost estimates will be reasonable. The loop lengths and feeder design assumptions in a cost model should reflect a rebuild of a total network to serve all Qwest customers in Arizona. The cable placement costs must be consistent with these loop lengths and feeder design assumptions. In other words, if a study includes all of the customers with the associated shorter average loop lengths and the economies of larger cable sizes, then the study must include costs of placing plant in areas with streets, houses and landscaping. The inputs must be consistent.

Q. HOW DOES QWEST'S TELRIC MODEL ACCOUNT FOR OBSTACLES ENCOUNTERED WHEN BUILDING FACILITIES IN DEVELOPED AREAS?

A. Qwest uses a combination of placement techniques to model the cost of building networks in developed areas. The ICM interface allows the user to vary these combinations as density changes. In rural areas, where less costly placement techniques such as plowing are often employed, the model allows the use of these methods.

Q. WHY IS PLOWING CABLE A LESS COSTLY PLACEMENT TECHNIQUE THAN OTHER PLACEMENT METHODS?

A. Plowing is less labor-intensive than normal trenching, since the plow opens the trench, lays the cable, and backfills the trench in one operation. Plowing is used where there are longer cable runs without obstacles.

Q. HOW DOES LOOPMOD CALCULATE PLACEMENT COSTS IN DEVELOPED URBAN AREAS?

A. In developed urban areas, LoopMod assumes the use of placing techniques, such as cut & restore sod, cut & restore concrete, cut & restore asphalt, boring and hand digging. These activities reflect the placement difficulties that would exist in mature neighborhoods. The levels of the activities were derived through interviews with field engineers and confirmed through an analysis of Qwest's experience in the Omaha Broadband Trial. The technical trial in Omaha involved placement of a distribution network in mature neighborhoods. This provided real-world experience relating to what methods of placement activities would be required for an ILEC to replace plant or a new entrant to build facilities in developed areas. In Omaha, the construction crews were forced to use directional boring to place over 65 percent of the new facilities in order to circumvent obstacles in mature areas. As the Omaha experience demonstrated, directional boring is appropriate when the cost of restoration, coupled with customer dissatisfaction due to property damage, outweighs the additional cost of using this placement technique. Qwest

is not alone in employing this technique. Boring is a common method of placing cable in urban areas to avoid the high cost of restoration and the disruption that goes with it. Mr. Overton provides further discussion of the Omaha project in his direct testimony.

Q. HAS QWEST GATHERED ANY OTHER INFORMATION THAT SUPPORTS THE ASSUMPTIONS REGARDING USE OF BORING TO PLACE CABLE IN DEVELOPED URBAN AREAS?

A. Yes. First, an article in the April 15, 1995 issue of America's Network (a periodical written for engineers and managers responsible for design, deployment, operation and maintenance of public network elements) estimated that in 1994, 25% of underground utility placement was done via trenchless methods. In addition, the article cited an AT&T project in Atlanta, Georgia in which Southern Boring, an AT&T subcontractor, placed 30,000 feet of underground cable using directional boring. The boring method was utilized because it avoided the "disruption and mess excavation would have caused." In discussing the Qwest (then U S WEST) Omaha broadband project, the article further stated that "directional boring may not completely replace other methods. Trenchers and vibratory plows also played a part in the Omaha project and will continue to do most of the work in ***unimproved areas free of utilities*** and where surface disturbance isn't a factor" (emphasis added). Second, representatives of Qwest conducted an interview of representatives of a cable television company in Bismarck, North Dakota. Their experience in conducting a rebuild of the outside plant provided insight and support for the mix of placement activities currently used in LoopMod. In the Bismarck rebuild,

approximately 50% of the 220 miles of buried plant was placed using boring techniques. Third, over the last year and a half, I visited several sites where contractors for AT&T Broadband were upgrading and replacing cable plant. This work involved extensive use of hand-dig, missile, and directional boring techniques. Last, an article in a recent construction trade magazine highlighted an Iowa firm that had completed projects for AT&T, McLeod, Qwest (then U S WEST) and other independent telecommunications companies. It stated that 60% of its' underground work was done using horizontal directional drilling.

Q. WHY SHOULD THIS COMMISSION ACCEPT THE PLACEMENT COSTS CONTAINED IN THE QWEST TELRIC MODEL?

A. The Commission should accept LoopMod's placement costs and selection of placement methods because:

- They are based on the costs the company will actually incur to place facilities; and
- They are consistent with the other assumptions used in the model.

Q. WOULD IT BE APPROPRIATE FOR THE COMMISSION TO USE A MODEL THAT REFLECTS ONLY THE CHARACTERISTICS OF NEW LOOPS AND AVOIDS RECOGNIZING THE HIGHER PLACEMENT COSTS ASSOCIATED WITH LAYING CABLE IN DEVELOPED NEIGHBORHOODS?

A. No, for the following reasons:

1. Such a model would not be consistent with TELRIC principles, because it would address only the costs of new customers and not the costs for existing customers;

2. A growth model, using only the costs of adding lines to the existing network, would generally produce higher loop costs than a total network or TELRIC model. This is due to the economies achieved in serving the entire universe of loop customers. Costs from a growth model would not be representative of the costs to serve the unbundled loop market.

IV. SHARING

Q. WHAT IS MEANT BY THE TERM "SHARING" IN THE OUTSIDE PLANT ENVIRONMENT?

A. Sharing in this context refers to the sharing of cable placement costs among multiple utility companies. Structure includes poles for aerial cable, conduit systems for underground cable, and trench for buried cable. For instance, in Arizona, Qwest owns poles on which the power company attaches its cables. In addition, Qwest attaches its cables to poles owned by the power company. Agreements such as this allow each company to avoid the cost of building pole structures and thereby, reduce costs. In new subdivisions, where several facilities (cable television, telephone and power) are being placed at the same time, trenching activity can be coordinated and the trenching costs can be shared among the different providers. Sharing is a viable tool in the limited circumstances where multiple providers are placing outside plant at the same time in the same area or where, in the case of poles, the structure is accessible at any time.

Q. IS STRUCTURE SHARING ALWAYS AN AVAILABLE OPTION?

A. No. For sharing to be feasible in placing buried cable, there must be a need for multiple providers to access a certain area at approximately the same time. In the TELRIC studies, a major portion of the network is in areas that currently have power and cable television. For those areas, a rebuild of the network will not involve sharing among multiple facility providers, since the other providers already have their facilities in place. The rebuilds in

Omaha and Bismarck, mentioned earlier, yielded minimal trench sharing. In addition, there are certain placement techniques, such as plowing and boring, for which the placement of multiple cables simultaneously is not technically feasible or practical. Even pole lines have separation and clearance requirements that may preclude attachment to an existing structure.

Q. WHAT CHANGES DID QWEST MAKE TO THE LOOPMOD RELATING TO SHARING THE COSTS OF PLACING FACILITIES?

A. The ICM interface provides access to a structure sharing option that was added to LoopMod. This option gives the user the ability to specify the percentage sharing for aerial, underground, and buried. Within the buried environment, the sharing assumptions can be further refined to address each placement activity for Feeder-Urban, Feeder-Rural and distribution cable within Density Group 1, Density Group 2, Density Group 3, Density Group 4 and Density Group 5. The user can also adjust the amount of structure sharing for buried drops in Density Groups 3, 4 and 5.

Q. PLEASE SUMMARIZE THE SHARING INPUTS RECOMMENDED BY QWEST.

A. The summary below shows the percentage of the total cable plant placement costs that will be incurred by the telephone company based on the standard inputs. The costs that the telephone company does not bear because of the use of these percentages are assumed to be borne by other utility companies, such as power or cable television providers.

	Percent Incurred By Qwest
Aerial	50%
Underground	95%
Buried Feeder-Urban	80%
Buried Feeder-Rural	80%
Buried DG1	80%
Buried DG2	80%
Buried DG3	80%
Buried DG4	80%
Buried DG5	80%

The inputs that Qwest recommends assume that the opportunity to share will occur primarily in undeveloped areas where a developer will provide the trench at no cost to the company. In developed areas or areas where there is not a developer, the company will bear the cost of trenching, and there will be little opportunity to share.

Q. IS IT APPROPRIATE TO ASSUME QWEST WOULD ALWAYS SHARE WITH OTHER TELECOMMUNICATIONS PROVIDERS?

A. No, assuming widespread structure sharing with other telecommunications providers is inconsistent with the other study assumptions. It is doubtful that any one or combination of companies will build a second ubiquitous telecommunications network. In fact, in

many areas, it is doubtful that anyone will even build a land-based network. This reality was recognized by AT&T in their 'informal filing' to the FCC on March 18, 1996 when it stated:

"Capital costs to build a second traditional wireline network are prohibitive."

Despite this statement, AT&T has asked commissions in other jurisdictions to adopt a scenario in which, on average, three companies would share the costs of placing the total network.

Q. WHAT PERCENTAGE OF BURIED CABLE PLACEMENT OCCURS IN JOINT OR SHARED TRENCH TODAY?

A. Based on data from Qwest buried placement records, for the years 1995 to 1999, Qwest has been able to share trench for approximately 18% of the buried sheath footage placed. This figure compares with the 20% being utilized as the recommended input in the ICM. The actual data is optimistic, as it reflects the placement activities in a growth environment, not the mix that would be achieved in a network rebuild. The standard input used in LoopMod is a very liberal estimate of the buried plant structure sharing that would occur. Once again, if the advent of additional facilities-based providers is interpreted as an opportunity to share trench in distribution plant, then there needs to be recognition of the adverse impact on the utilization of Qwest distribution facilities. As the provider of last resort, Qwest is obligated to build plant to every home. If a competitive entity is willing to share a trench in a sub-division, it must have an expectation of also selling services, reducing the use of Qwest distribution plant.

VI. PLANT MIX

Q. WHAT IS MEANT BY PLANT MIX?

A. Plant mix is the relative percentages of the various facility supporting structures. The supporting structures are poles, anchors, and guys for aerial cable, trench for direct buried cable, and conduit systems for underground cable. Conduit systems include the trench, the ducts, and the splicing chambers. Each structure has its own unique costs and appropriate application. Conduit systems are typically used in areas where there will be multiple cables and where access to those cables will be necessary in the future. Areas with high density such as urban centers or the neighborhoods surrounding wire centers are likely to have conduit systems rather than directly buried cables. Directly buried cables will be used in areas where it is likely that there will be a need for reinforcement. Examples of this are lower density feeder routes and distribution areas. Poles (aerial cable) were used throughout the network in the past, but are becoming a less frequently used structure. This is for a variety of reasons. While aerial has lower first cost for placement, it is subject to a higher percentage of maintenance problems due to its exposure to weather, rodents, and vandalism. Also, municipalities and homeowner groups are encouraging the use of buried plant for aesthetic reasons.

Q. WHAT MIX IS UTILIZED IN THE QWEST LOOP STUDIES?

A. The LoopMod designs designate underground placement for all cable within certain distances of the central office. The distances vary by size of wire center. This reflects the

fact that density will decrease more rapidly in smaller wire centers than in larger wire centers. The distance breakpoints for underground to buried feeder cable are: Very Small wire centers - 1,000 feet, Small wire centers - 7,000 feet, Medium wire centers - 14,000 feet, and Large wire centers - 20,000 feet. Within the remaining plant mileage, LoopMod uses an aerial percentage input to split the cable between buried and aerial. The default input for aerial is 14%. Based on that input, if the model develops 1000 miles of cable beyond the underground breakpoint, 140 miles of that cable would be assumed to be aerial.

Q. WHAT SUPPORT DOES QWEST HAVE FOR THE DEFAULT AERIAL PERCENTAGE?

A. The aerial percentage is based on a Qwest wide summary of cable sheath miles in service. The data is separated by type of placement (aerial, building, underground, buried and submarine) and by fiber versus copper. Data from an August 2000 report shows that aerial comprises 13.8% of the total sheath miles for aerial and buried cable. The number for December 1996 was 14.5%. While not a dramatic shift, this shows that the percentage of aerial cable is generally decreasing and that it is highly unlikely that a network rebuild would result in an increase in aerial plant.

V. FILL FACTORS

Q. PLEASE BRIEFLY EXPLAIN WHAT FILL FACTORS ARE.

A. Fill factors, or utilization factors, are simply a relationship between the capacity of plant that will be provided or constructed and the amount of that plant that will be used. The feeder cable fill inputs to LoopMod are a maximum desired utilization at the point in time when the cable is placed. The cable or equipment selected will have the additional capacity associated with the fill or sizing factor as well as the additional capacity from selecting discrete cable and equipment sizes. For example, a location that has demand for 60 working pairs would select a 100 pair cable based on the following calculation. Demand (60 lines) divided by sizing factor (80%) equals 75 pair requirement. The next larger cable would be a 100 pair facility. The effective fill would actually be 60% (60 working lines divided by 100 available pairs). The methodology is the same with Digital Loop Carrier (DLC) equipment. The default sizing factor for both cable and DLC systems is 80%. The line cards for the DLC systems are sized using a 90% factor, as they can be more readily reinforced than cables and DLC systems.

Q. ARE DISTRIBUTION FILL FACTORS USED IN THE LOOPMOD PROGRAM?

A. LoopMod does not use fill factors in the standard distribution designs. The Qwest studies assume a certain network design, two pairs or three pairs for each living unit depending on where they are located (i.e., two pairs in rural and multi-family; three pairs in other areas). The distribution cable is sized to reflect this assumption. The program develops a total investment for each distribution area and then divides that by the number of working lines. Thus, the fill is implicit in the calculation. It is not an input. This approach is consistent with the practices of the engineers who design the company's network.

Q. COULD YOU REVISE THE DISTRIBUTION DESIGN IN THE MODEL IF YOU WANTED TO REFLECT A DIFFERENT LEVEL OF UTILIZATION THAN CURRENTLY PRODUCED BY THE MODEL?

A. Although the ICM interface allows the user to size distribution facilities based on a desired fill, I would not recommend it except for use in sensitivity tests. As I stated above, when engineers are designing distribution plant, they do not start with a desired fill. They work with a design criteria of X pairs per site. Cable is then sized based on the pairs per site, the number of homes passed and binder group integrity. The 25-pair binder groups of cable pairs are engineered to remain intact to facilitate splicing and branching of cable facilities. These binder groups are generally not broken up. The utilization levels are a result of the actual demand experienced in conjunction with the design. The levels are not an input to the process. By contrast, feeder plant is managed from a fill perspective. Feeder plant is designed to be reinforced periodically and is far more fungible or flexible in assignment. Distribution is designed to avoid reinforcement and is more geographically or customer specific.

Q. WOULD CHANGES IN THE FILL FACTOR USING THIS APPROACH SIGNIFICANTLY CHANGE THE COSTS PRODUCED BY THE MODEL?

A. No. Since the fill factor is only used to size cable, only the cost of that cable is affected. A two pair facility does not cost twice as much as a one pair facility. Likewise, a 100 pair cable is not twice as expensive as a 50 pair cable. A 100 pair cable costs $2.16 per foot,

only $.63 more than the $1.53 cost of a 50 pair cable. Thus, increases in cable size do not have a one-for-one impact on the costs produced by a model.

Q. WHAT IS THE AVERAGE NUMBER OF ACCESS LINES IN USE PER RESIDENCE CURRENTLY IN ARIZONA?

A. According to data from the Qwest Integrated Forecasting Tool (IFT) as of October 1998 there were 1.1712 working lines per residence. The additional .1712 lines per location are the result of situations where a customer requires a second, third or even fourth line. Thus, a three pair design allows the company to respond to demand for additional pairs, regardless of where the demand exists in a neighborhood, with a minimum of additional investment and without disruptive reinforcements. In addition to being economically efficient, building distribution plant in this fashion is consistent with the Qwest and the Arizona Commission's goal to minimize held orders.

VI. CONCLUSION

Q. PLEASE SUMMARIZE YOUR TESTIMONY.

A. The loop module of the ICM program presented in this docket utilizes realistic network designs and data inputs. There are changes to input data (contractor placing, updated material prices), platform enhancements (user interfaces, increased access to variables) and program refinements (route specific feeder, state specific distribution weightings, disaggregated placing activities, disaggregated drop data). The model's underlying

structure is based on valid engineering guidelines. The model develops a realistic estimate of the investment for an unbundled loop. It does this in a consistent fashion, recognizing the economies of forward-looking technologies and feeder cable sizing used in serving the universe of existing customer locations, while also including the placing costs that would be incurred in a rebuild of the existing network or would be faced by a new entrant. These assumptions are in concert with the TELRIC guidelines concerning technology, access line demand and utilization levels. These inputs and assumptions are discussed in detail in Exhibit RJB-3 attached to this testimony. In addition, other program information (interface screens and help text) is discussed in my Exhibits RJB-1 and RJB-2.

Q. DOES THIS CONCLUDE YOUR TESTIMONY?

A. Yes it does.

BEFORE THE ARIZONA CORPORATION COMMISSION

WILLIAM A. MUNDELL
CHAIRMAN
JAMES M. IRVIN
COMMISSIONER
MARC SPITZER
COMMISSIONER

IN THE MATTER OF INVESTIGATION INTO QWEST CORPORATION'S COMPLIANCE WITH CERTAIN UNBUNDLED PRICING REQUIREMENTS FOR UNBUNDLED NETWORK ELEMENTS AND RESALE DISCOUNTS	)	DOCKET NO. T-00000A-00-0194 PHASE II

EXHIBITS OF

DICK BUCKLEY

ON BEHALF OF

QWEST CORPORATION

MARCH 15, 2001

INDEX OF EXHIBITS

DESCRIPTION	EXHIBIT
LoopMod User Screens and Updates	RJB-1
LoopMod Help Screen Data	RJB-2
LoopMod Default Values	RJB-3

Summary

The Loop Module (LoopMod) is an update to the Qwest Corporation (formerly U S WEST) Regional Loop Cost Analysis Program (RLCAP) model that is designed to estimate the investments associated with the provision of the local loop and drop outside plant. The program is a collection of Microsoft Excel based spreadsheets that contain data on the designs and components of the network, the prices for those components and the labor necessary to install them. In addition there is data included as to the dispersion of customers utilizing these local loops.

The Qwest personal computer based loop costing programs were first developed in 1988 and have evolved over the years in order to reflect the current outside plant technologies and Qwest network guidelines. In addition to the normal updates that take place during the life of a model (prices, technology changes, line counts, etc.), LoopMod includes changes to the user interface that ease adjustments to the myriad of network inputs used by the model. Listed below are summaries of these changes and the rationale behind them.

1. **Updated user screens.**
   Earlier versions of the loop programs required the user to "baby-sit" the program and hit a button at several points during the processing to reach a final result. These intermediate steps have been removed so that after the user makes the appropriate selections and starts the run, the program will process to completion. The Start screen or first screen that the user encounters contains all of the standard items that would be required for a typical loop and drop investment run. For most situations runs can be completed from this location in a matter of minutes. These selections are discussed detail in the attached "LoopMod V2.0 Default Values". Below are brief descriptions of each screen.

   Start screen

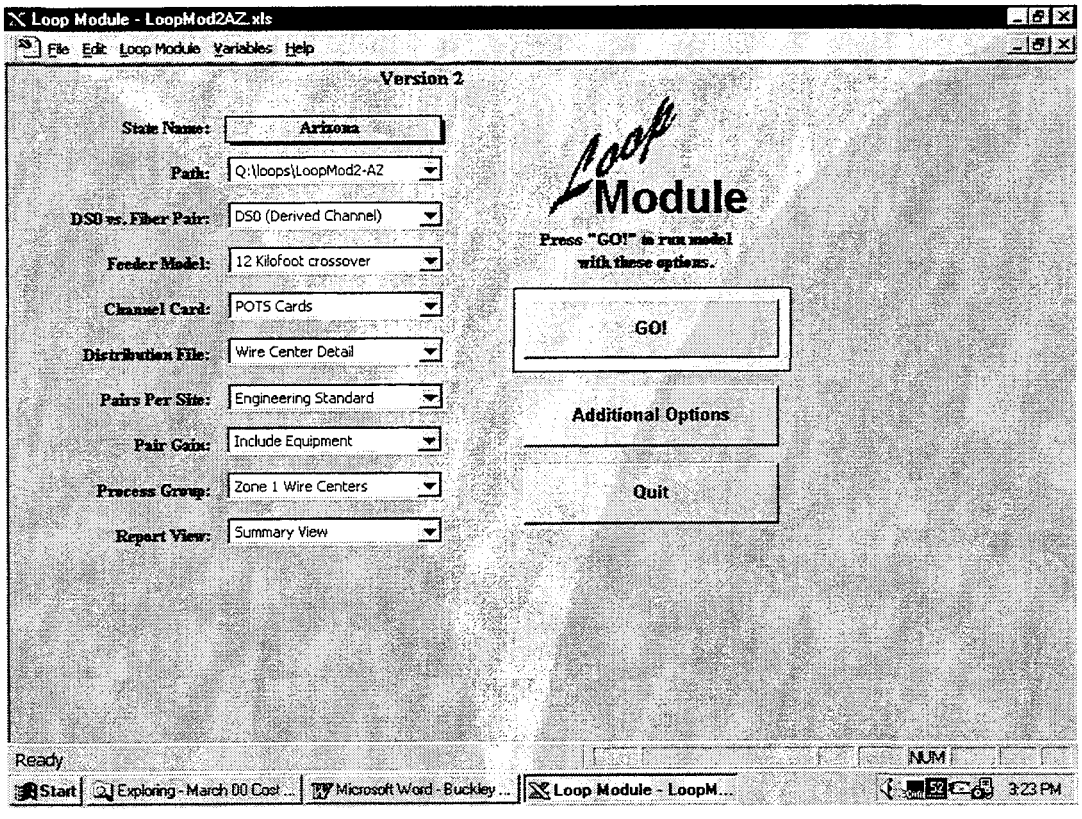

Additional Options Screen

When a user wants to make more detailed adjustments, there is an "Additional Options" button that will take them to another screen. This screen contains options that allow the user to start the program processing, exit the program, return to the initial screen, restore or eliminate headers and tabs, print the data selections and select another screen for editing various inputs. This screen is used for making changes to default data included in standard runs.

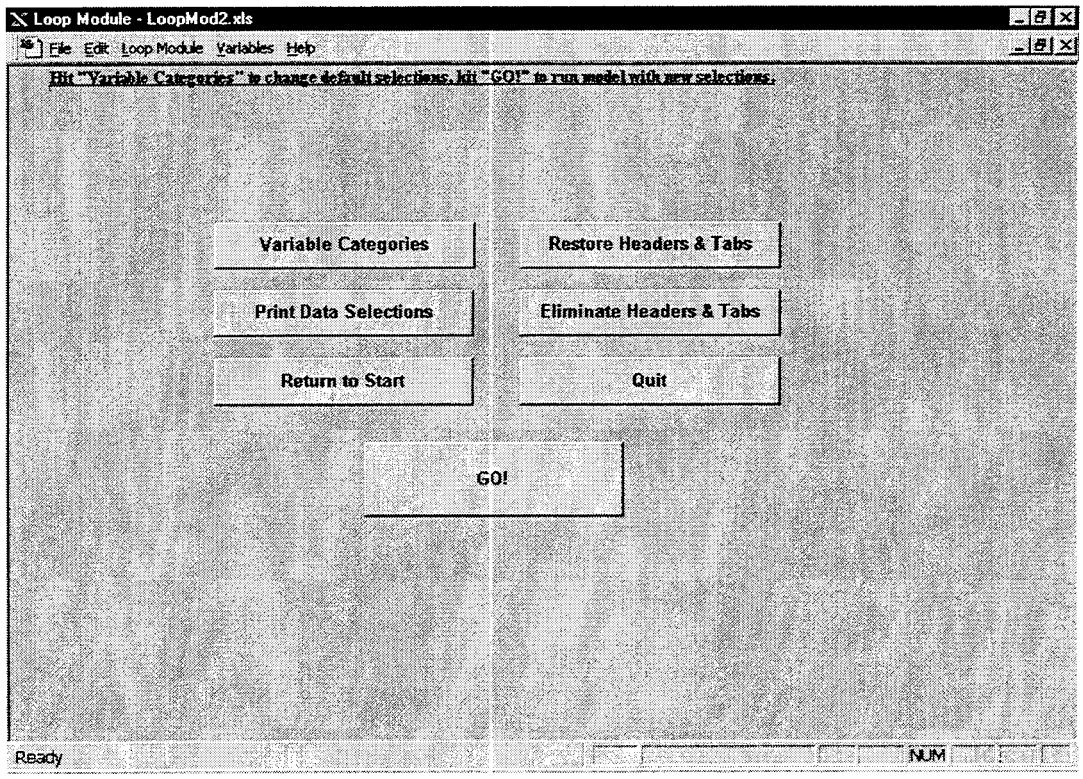

After printing the data selections or making changes at the Variables Categories screen level the user can start the program processing from this location. If the "Return to Start" button is pressed a message box will come up with a warning that all non-default data will be overwritten. The user than has the option to cancel the return and run with the settings or continue with the return to start.

Variables Categories screen

The Variables Categories screen is where the user will input the majority of the adjustments to the default settings. Input data such as cable and equipment prices, line counts, drop lengths, sharing percentages, and wire center lists are all accessible here.

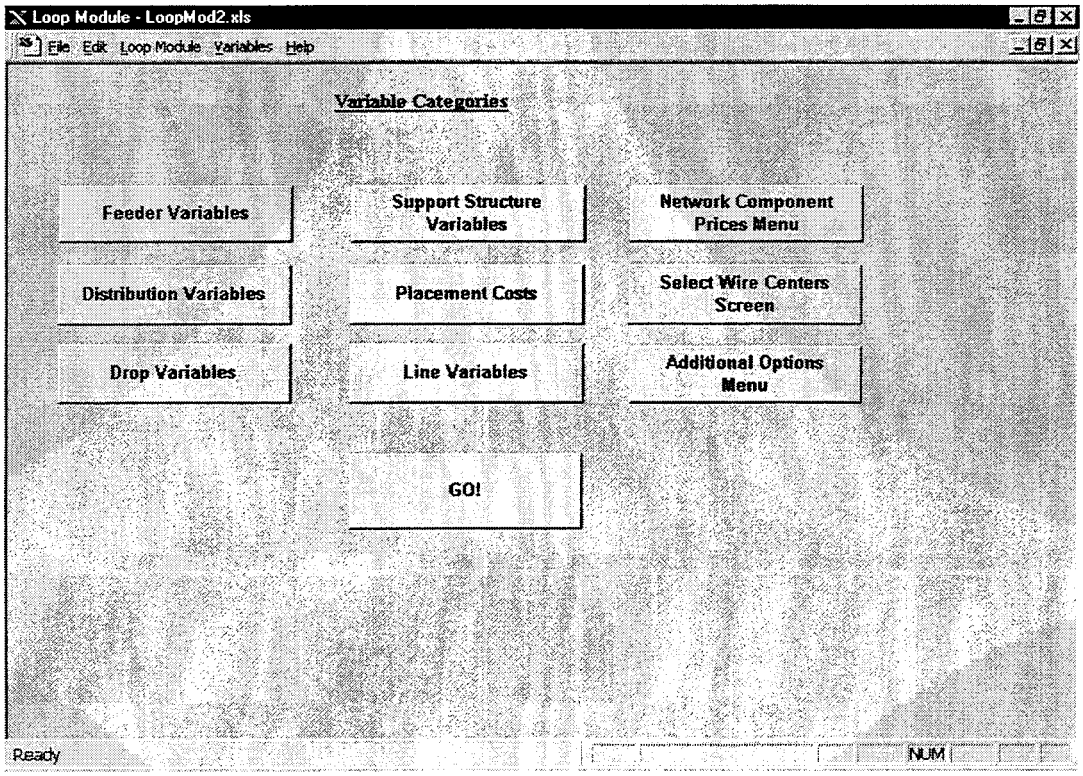

Once the default inputs are adjusted to the levels desired by the user, the "GO" button can be pressed to run the program or the user can select the "Additional Options Menu" button to return to that screen.

Network Component Prices screen

The Network Component screen is where the user will input the price adjustments to the default settings. Input data for cable and equipment prices are accessible through the various buttons on this screen.

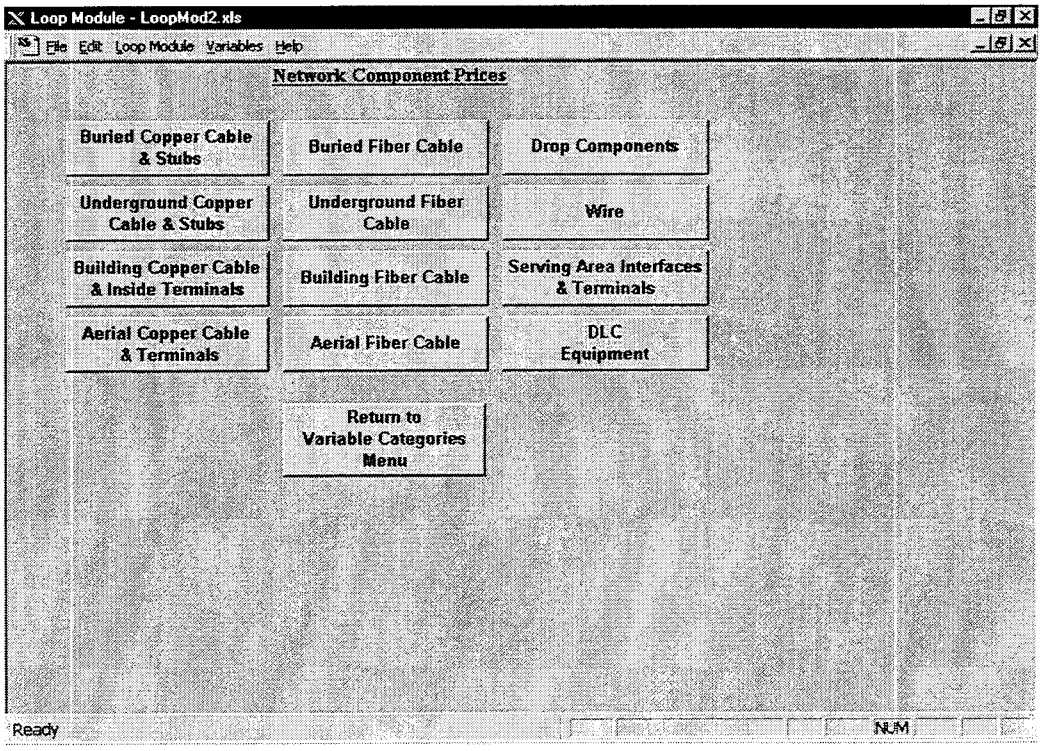

Once the default inputs are adjusted to the levels desired by the user, the "Return to Variable Categories Menu" button would be pressed and the run could be initiated from that screen.

Results screen

The results screen contains a summary of the loop and drop investments and buttons that enable the user to either view or print the more detailed investment summary sheet. It also contains the "More Options" button that takes the user to another screen with additional extract and printing options.

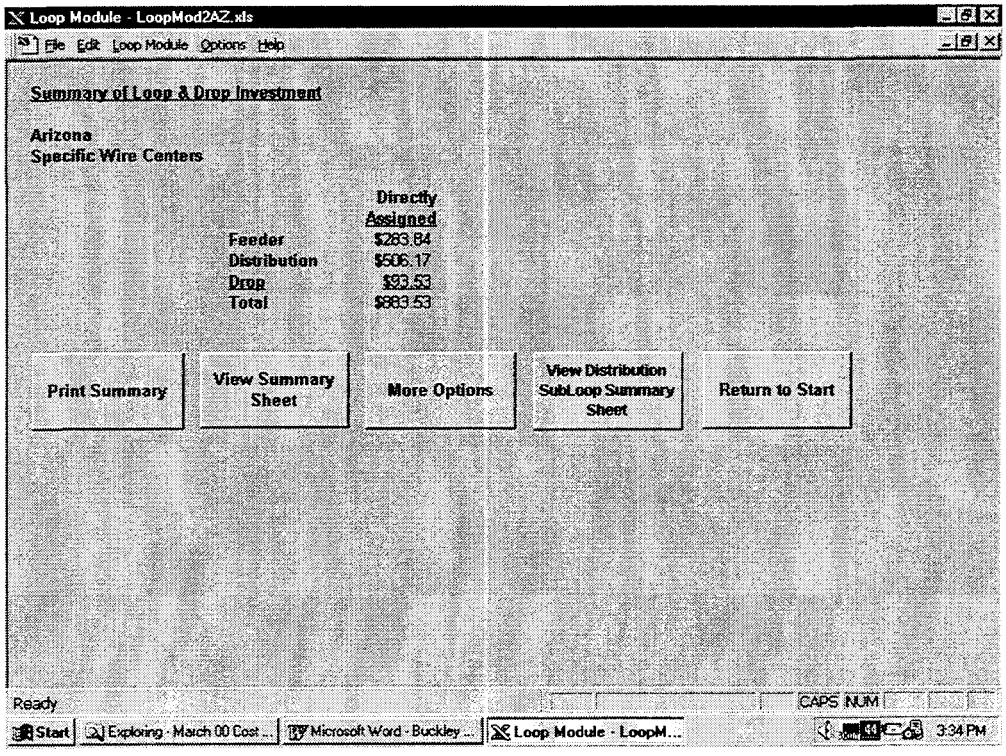

Once the user is done the return to start button can be used to start the process over with a different set of selections.

More Options Screen

This screen contains various extract buttons to create files for retention of outputs or further analysis. There are also print buttons to backup or lower level results summaries. The "Add Note" button is useful in sensitivity tests for linking results with changes to inputs.

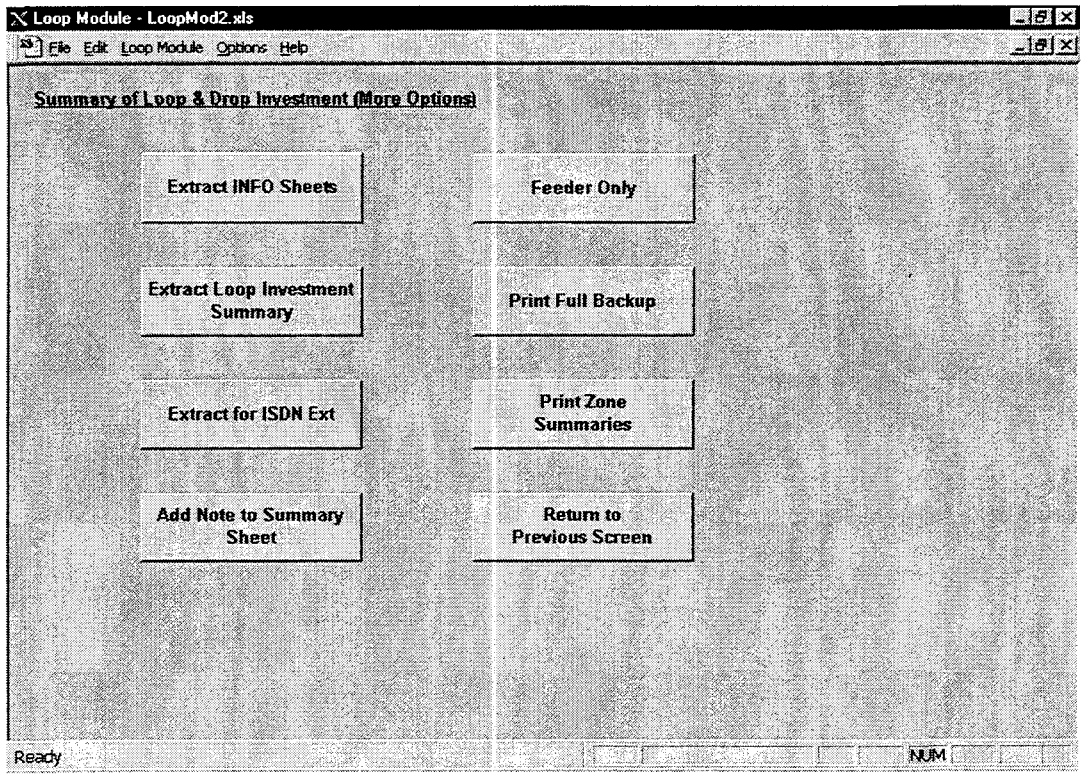

When the user is finished here "Previous Sheet" will return the user to the results screen. From there the user can return to the Start screen and quit the program or make additional runs.

2. **Increased input variability**

The variables sheet shown above allows the user a mechanized means of adjusting a variety of inputs that were previously less accessible. Sharing, for instance, can now be accessed through a button on this sheet, as can drop lengths, cable sizing factors, aerial percentages, and the mix of placement activities. There is no longer a need to modify formulas in underlying spreadsheets to make these sorts of adjustments.

3. **Structure Sharing**

Structure sharing is now an input variable for aerial structure, underground structure, and buried structure. Within buried the user can vary the percent sharing on feeder-urban, feeder-rural, and distribution designs DG1, DG2, DG3, DG4 and DG5. The structure sharing percentages represent the percentage of investment USWC will avoid through sharing of the construction costs for poles, conduit systems or trench. For example, if the Telephone Company is assumed to be responsible for 80% of the cost of trenching for a buried cable, the sharing input for that situation would be 20%.

From an actual application perspective, the aerial and underground structure ratios are reduced by the sharing percentages. The buried structure sharing, because of the variety of activities involved, is a more complex calculation. For example, certain portions are not subject to sharing, lay cable in particular. Consequently, the sharing percentage will apply only to the activities, which can actually be shared.

4. **Placing cost data**

The latest data from the currently negotiated contracts has been incorporated into the development of cost information for the various placing activities for buried plant. This information is used for both cable and drop placements.

5. **Disaggregation of placing cost by density**

The mix of buried plant placing activities can now be varied at a distribution Density Group level. In addition the mix can be set differently for urban feeder versus rural feeder. This allows the user to take advantage of lower cost placing methods, such as plowing or cut & restore sod, where density would allow it while still reflecting the costs of placing plant in mature, higher density neighborhoods. The higher density areas would likely require the use of techniques such as directional boring or cut & restore of asphalt or concrete

6. **Feeder modeling**

The feeder parameters under the Variable Categories menu address cable sizing factor, aerial percentages, mix of placement activities, and sharing percentages. In the feeder model selection box there is an option entitled "Custom Model". This option will allow the user to adjust such inputs as the cross-over points between copper and Digital Loop Carrier (DLC), between underground and buried placement (for either fiber or copper), and between urban and rural placement mix for buried facilities. This screen also provides the user the ability to adjust sizing factors for DLC systems and channel units and to set parameters for distance zones.

7. Fill variable distribution design

The default distribution design reflects particular "pairs per site" type cable sizing. If the user wishes to place cable with a different utilization level, there is an option available that will drive the cable sizing to the desired fills. The calculations underlying the design is that in a pairs per site type design the engineer would allow for 2 or 3 pairs at each site (home) the cable passes. This drives the sizing of the cable, e.g., after passing the 8th home in a 3 pair design the cable would move from a 25 (with 24 pairs used) to a 50 pair. The 9th home would be assigned pairs 26, 27 and 28 in the 50 pair cable.

In a fill type design the fill percentage will drive the number and fraction of pairs required at each site. For instance, with a 66% fill as each home is passed the design would assume 1 working pair and ½ non-working pair. The net effect of this is that a 25 pair cable will now serve more homes than it did in the 3 pair design. The length of the trench does not change, but the size of the facility within it does. This provides a saving on material (a 25 pair cable is about 75% of the cost of a 50 pair cable) but does not have an impact on the placing or structure cost.

8. Drop length data by Density Group

Drops are utilized in Density Group 3, 4 & 5. One of the primary differences between the three designs is lot size. Drop length would logically vary with lot size. To better tie drops to the designs, a length can be input for each of the three designs. Length can also be input separately for aerial versus buried. This provides drop data that more accurately reflects the density differences from one state to another.

9. Unit Calculation for Density Groups

The density group Unit or divisor calculation is based on the number of additional lines and the percentage of idle dedicated lines. Idle dedicated lines are those lines that are primaries at a location and consequently left assigned even when a location is temporarily vacant. An example of this would be an apartment that may be unoccupied for 2 months. It would cause extra labor activity and administrative problems to use that primary pair for another renters additional line demand. It is more efficient to leave it idle and available for the next renter in that unit. The additional line demand would be met with pairs designed for that purpose. In the Unit calculation the designed number of units (400 homes in a subdivision for instance) is adjusted to reflect both the downward effect on utilization of idle dedicated as well as the upward effect of additional line take. The additional line percentage is based on the number of additional lines divided by the total number of residential lines.

10. Cost Calculations

The final results from LoopMod are at the investment level. To maintain consistency with the other USWC models, the investment outputs are converted to monthly costs within the Integrated Cost Model (ICM). This provides for consistent output format for the various components of complete cost studies and allows the study analyst the ability to make sensitivity runs more easily.

Help screen data from LoopMod V2.0

The following information is also available through the Help menus while running LoopMod.

Start Screen

State Name
Displays the state for which the investments are run.

Path
Establishes the computer path on which the program will run.

DS0 Vs Fiber Pair
Selection will determine the whether investments are calculated on a DS0 or Fiber pair basis.

Feeder Model
Selection will determine the feeder design.

Channel Card
Selection will determine the Remote Terminal Channel Unit cost used in the study.

Distribution File
This selection will determine the Distribution Group file to be used.

Pairs Per Site
This selection will allow the user to select 1 pair per site, 2 pair per site or Engineering Standard distribution designs. It also allows the user to select Custom and build a set of fill driven designs.

Pair Gain
Selection will include or exclude the pair gain equipment investments.

Process Group
Selection will determine which Wire Centers (or group of Wire Centers) will be included in the results.

Report View
This selection will determine the level of detail in the output.

GO!
This selection runs the program.

Additional Options
This selection takes the user to the Additional Options screen.

Quit
Selecting this option will terminate the program. No user changes will be saved.

Feeder Model (Option on Start Screen)

Default Feeder Model is 12 Kilofoot Crossover for fiber

12 Kilofeet Crossover is the point at which fiber replaces copper in the feeder.

Custom Model will allow changes to:

Copper / Fiber Crossovers
Copper Underground / Buried Crossovers
Fiber Underground / Buried Crossovers
Urban / Rural Crossovers
DLC Card and System Fills
"Distance Zones" Definitions

Distribution File (Option on Start Screen)

Default is Wire Center Detail

Distribution Area Detail
Each Distribution Area will be individually processed (same result as Wire Center Detail)

Wire Center Detail
The Distribution Areas have been condensed to speed up processing. One condensed Distribution Area representing each Distribution Group will be processed (same result as Distribution Area Detail)

Custom
Takes user to DAAnalyze.mdb. This is a Microsoft Access database that contains the network distribution area (DA) data and the criteria used in mapping DAs to Density Groups

Note on Distribution Groups:

There are five Distribution Groups modeled in LoopMod:
- DG 1 - High Rise buildings (structures with a single entrance facility)
- DG2 - Multi-building/Multi-tenant
- DG3 - Single family Serving Area Concept with standard lot size
- DG4 - Single family Serving Area Concept with large lot size
- DG5 - Very low density

Pairs Per Site (Option on Start Screen)

Default is Engineering Standard.

Engineering Standard
Designs are 2 pairs per site for DG1 and DG2, 3 pairs per site for DG3 and DG4, and 2 pairs per site for DG5.

1-Pair per Site
This selects a set of designs that are 1 pair per site for all Distribution Groups.

2-Pairs per Site
This selects a set of designs that are 2 pairs per site for all Distribution Groups.

Custom Model
This option will allow the user to select a fill level for distribution cable sizing for each Distribution Group. The fills approximate pairs per site based on one worker per location (33% = 3 pairs per site, 50% = 2 pairs per site.)

Process Group (Option on Start Screen)

Default is All Wire Centers

All Wire Centers
Includes all Wire Centers in the state

Specific Wire Centers
Includes only the Wire Centers selected by the user. The user must go to the "Select Wire Center" menu option or variable category

MSA Zone 1
Includes all Wire Centers in the predetermined MSA Zone 1 for the state

MSA Zone 2
Includes all Wire Centers in the predetermined MSA Zone 2 for the state

MSA Zone 3
Includes all Wire Centers in the predetermined MSA Zone 3 for the state

Report View (Option on Start Screen)

Default is Summary View

Summary View
All of the Wire Centers selected will be averaged and displayed once.

Detail View
Each Wire Centers selected will have it's own investment displayed.

Additional Options Screen

Variable Categories
This selection takes the user to the Variable Categories screen (input edits).

Print Data Selections
This option will print the variable selections identified on the Data sheet.

Return to Start
This option will display a dialog box advising the user that returning to Start will erase any variable changes that have been made to the options presented on the Variables screen below. The user can choose to continue on to the Start screen or remain on the Additional Options screen.

Restore Headers & Tabs
Select this option when access is required to the background worksheets.

Eliminate Headers & Tabs
This option returns the program to its default condition of hidden headers and tabs.

Quit
Selecting this option will terminate the program. No user changes will be saved.

GO!
This selection runs the program.

Variable Categories Screen

Feeder Variables
This option will display all of the variables concerned with Feeder.

Distribution Variables
This option will display all of the variables concerned with Distribution.

Drop Variables
This option will display all of the variables concerned with Drop.

Support Structure Variables
This option will display all of the variables concerned with Support Structure ratios.

Placement Costs
This option provides the opportunity to change the placement activity costs for buried cable (45C) and buried fiber (845C).

Line Variables
This option will display all of the variables concerned with Line counts.

Network Component Prices Menu
Selecting this button will take the user to the Network Component Prices screen. It provides the opportunity to change all material investments including copper cables, load coils, fiber, stubs, pedestals, inside terminals, cross-connects (SAIs), and digital loop carrier systems. Defaults are the network based unit investments by state. English descriptions are located to the right of the data.

Select Wire Centers Screen
This will take the user to a screen that will display all of the Wire Centers available for processing.

Return to Additional Options Screen
Select this button to return to the Additional Options screen.

Feeder Variables Screen

"Distance Zones" Boundaries (Feeder Only!)
This option will create up to 8 Zones within each Wire Center that are based on distance from the Central Office. Pressing the "Feeder Sections" button will take the user to FeederMod.xls – the Feeder pre-processor. The user can then define the "Distance Zones" and create the custom feeder model.

Pressing this button will automatically set the Feeder Model variable on the Start Screen to "Custom".

The "Distance Zones" should be created for Distribution to match the ones created for Feeder.

Feeder Fill Information
Feeder Fill for Copper Cable is the Copper Cable sizing factor. The default is 80%

Feeder Fill for Fiber Cable is the Fiber Cable sizing factor. The default is 100%.

Aerial Feeder Percentages
Determines the amount of Aerial Copper will be used instead of Buried Copper.
The Default is 14%.

Placement Activities and Sharing Percentages
This option provides the opportunity to change the placement activity percentages. The feeder placement activity percentages are segmented by Urban and Rural. The total activity percentage must total 100% for both Urban and Rural feeder!

Sharing percentages for each activity can be specified. The default is 20%.

Distribution Variables Screen

Distance Zone Boundaries- (Distribution Only!)
This option will create up to 8 Zones within each Wire Center that are based on distance from the Central Office. Enter the Upper Limit (outer edge) of each Zone. The last Zone must have an Upper Limit of 999,999! The "Distance Zones" should be created for Feeder to match the ones created for Distribution.

Aerial Distribution Percentages
The user must return to start and select "Custom Model" under Pairs per Site to adjust the Aerial Distribution Percentage

Placement Activities and Sharing Percentages
This option provides the opportunity to change the placement activity percentages. The distribution placement activities are broken out by the five Distribution Groups The total activity percentage must total 100% for each Distribution Group!

Sharing percentages for each activity can be specified. The default is 20%.

Distribution Group Mix
This option is the same as selecting a custom distribution file. It will take you to DAAnalyze.mdb.

Drop Variables Screen

Drops only occur in Distribution Groups 3, 4, and 5. Distribution Groups 1 and 2 are served by an entrance facility to the building.

Sharing Percentages by Distribution Groups for Drops
The default sharing percentage is 20%. This assumes that 20% of the cost of the drop trench will be avoided.

Average Aerial and Buried Drop Lengths
Average drop lengths are input for Aerial and Buried drops in Distribution Groups 3, 4, and 5. The defaults are 70 feet for DG3, 200 feet for DG4, and 300 feet for DG5.

Support Structure Ratios Screen

The U S West Factors Group provides the support structure ratios. Multiplying the structure ratio times the investment for the associated copper or fiber cable account develops the investments for poles and conduit.

Factor 1-52
This is the ratio of pole investment (1C) to aerial cable investment (52C).

Factor 4-5
This is the ratio of conduit investment (4C) to underground cable investment (5C).

Factor 4-85
This is the ratio of conduit investment (4C) to underground fiber cable investment (85C).

Line Variables Screen

The line variables address the percentages of additional lines per location and the percentage of idle primary lines. The net of these two numbers is used to calculate the working lines per density group design.

Additional Lines
The additional line quantity represents the current additional lines in service.

Idle Dedicated
The idle dedicated percentage represents the number of primary lines left assigned that are not working. This could be due to churn (vacant apartments, non-occupied houses) or losses to competition where facilities are in place.

Network Components Screen

Buried Copper Cable & Stubs
This option provides the opportunity to change buried copper cable and stub prices. These prices include material investments, and splicing and engineering costs. Placement costs are not included. They are developed from the Placement Costs and Placement Percentages. The Account Code (Field Reporting Code) is 45C.

Underground Copper Cable & Stubs
This option provides the opportunity to change underground copper cable, stub, and load coil prices. These prices include material investments, and splicing, engineering and placing costs. The Account Code (Field Reporting Code) is 5C.

Building Copper Cable & Inside Terminals
This option provides the opportunity to change building copper cable and inside terminal prices. These prices include material investments, and splicing, engineering and placing costs. The Account Code (Field Reporting Code) is 62C.

Aerial Copper Cable & Terminals
This option provides the opportunity to change aerial copper cable and terminal prices. These prices include material investments, and splicing, engineering, and placing costs. The Account Code (Field Reporting Code) is 52C.

Buried Fiber Cable
This option provides the opportunity to change buried fiber cable prices. These prices include material investments, and splicing and engineering costs. Placement costs are not included. They are developed from the Placement Costs and Placement Percentages. The Account Code (Field Reporting Code) is 845C.

Underground Fiber Cable
This option provides the opportunity to change underground fiber cable prices. These prices include material investments, and splicing, engineering, and placing costs. The Account Code (Field Reporting Code) is 85C.

Building Fiber Cable
This option provides the opportunity to change building fiber cable prices. These prices include material investments, and splicing, engineering, and placing costs. The Account Code (Field Reporting Code) is 862C

Aerial Fiber Cable
This option provides the opportunity to change underground fiber cable prices. These prices include material investments, and splicing, engineering, and placing costs. The Account Code (Field Reporting Code) is 852C.

Drop Components
This option provides the opportunity to change drop component prices. These prices include material investments, protector and termination labor, and mobilization costs. The drop components are provided for two pair buried drop, three pair buried drop and aerial drop. The Account Codes (Field Reporting Codes) are 35C for Buried Drop and 42C for Aerial Drop.

Wire
This option provides the opportunity to change the wire price. This price includes material investments, splicing, engineering, and placing costs. C-Wire is a coarse gauge, high tensile strength, single pair facility used for long runs in low-density areas. The Account Code (Field Reporting Code) is 3C.

Serving Area Interfaces & Terminals
This option provides the opportunity to change Serving Area Interface (SAI), pedestal, and encapsulated terminal prices. These prices include material investments, splicing, engineering and placing costs. The SAI is the cross-connect between the feeder cable and the distribution cable. There is one SAI assumed in each design for Distribution Groups 2, 3, 4, and 5. The Account Code (Field Reporting Code) is 45C.

DLC Optic Equipment
This option provides the user the ability to change prices for fiber optic based Digital Loop Carrier system components. The prices are engineered, furnished and installed for the central office terminals, remote terminals, and channel units. The Account Code (Field Reporting Code) is 257C.

Return to Variable Categories Screen
Select this button to return to the Additional Options screen.

Select Wire Centers Screen

This screen lists all of the Wire Centers that are available to process. All of the Wire Centers that will be processed in the current run have an 'X' in the "Selected?" column.

To Add a Wire Center - Place an 'X' in the "Selected?" column next to the Wire Center desired.

To Remove a Wire Center – Remove the 'X' from the "Selected?" column

Summary of Loop & Drop Investment (Summary View)

After running the model with the "Summary View" option selected, the following options are available.

Print Summary
This selection will print a one-page summary of the investments by Account Code and list the Average Loop Length, Number of Loops, Average Feeder Fill, and Percent Digital Loop Carrier. Summary will also itemize the inputs used in this run: Feeder Model, Distribution Group Mix, and Pairs per Site.

View Summary Sheet
This selection allows user to review investment summary.

More Options
This option provides the user with multiple presentation formats and outputs for the cost summary. See "Summary of Loop & Drop Investment (More Options)".

Return to Start
This option will send the user to the Start screen where a new run can be originated or the program can be exited. There is no option from Start to return to the "Summary of Loop & Drop Investment".

Summary of Loop & Drop Investment (More Options)

Extract INFO sheets
Allows the Data, INV, FeederInvestments, DistributionDetail, and Equipment-Investment sheets to be retained in a file in the LoopMod\OUTPUT\ directory for further use.

Extract Loop Investment Summary
Copies the Loop & Drop Investment summary to a file in the LoopMod\OUTPUT\ directory.

Extract for ISDN Ext.
The ISDN Extension cost is the difference between the investments developed with a DLC system using POTS card and the costs developed with an ISDN card. This option will copy the summaries of those two separate runs to a file, ZISDNSUM, where the difference is calculated and summarized.

Add Note to Summary Sheet
This option will create a NOTE box on the summary sheet where the user can add documentation for each specific investment run. Also see "Note Sheet" below.

Feeder Only
This option will zero out the distribution investments and provide a Feeder Only investment summary sheet. This activity is not reversible.

Print Full Backup
This option will print the entire backup documentation required. (Approximately 50 pages)

Print Zone Summaries
This option will print one-page investment summaries for each of the "Distance Zones". This summary of investments is by Account Code and also lists the Average Loop Length, Number of Loops, Average Feeder Fill, and Percent DLC. The summary will also itemize the inputs used in this run: Feeder Model, Distribution File, and Pairs per Site.

Previous Sheet
This option will return the user to "Summary of Loop & Drop Investment" screen.

Summary of Loop & Drop Investment (Detail View)

After running the model with the "Detail View" option selected, the following options are available.

Print Summary
This selection will print the investments by Account Code and list the Average Loop Length, Number of Loops, Average Feeder Fill, and Percent Digital Loop Carrier for each Wire Center. Summary will also itemize the inputs used in this run: Feeder Model, Process Group, and Pairs per Site.

Extract Wire Center Summary
Copies the Loop & Drop Investments for each Wire Center to a file in the LoopMod\OUTPUT\ directory.

Return to Start
This option will send the user to the Start screen where a new run can be originated or the program can be exited. There is no option from Start to return to the "Summary of Loop & Drop Investment".

LOOP MODULE

VERSION 2.0

Default Values

Arizona

Qwest Corporation

March 15, 2001

LOOP MODULE DEFAULT VALUES

Table of Contents

March, 2001

Section	Page
1. Overview	1
2. Distribution Fill	2
3. Feeder Fill	3
4. Average Drop Lengths	3
5. Placement Costs	4
6. Placement Percentages	5
7. Sharing Percentages	6
8. Network Component Prices	7
8.1 Buried Copper Cable and Stubs	7
8.2 Underground Copper Cable and Stubs	8
8.3 Building Copper Cable and Inside Terminals	9
8.4 Aerial Copper Cable and Terminal	10
8.5 Buried Fiber Cable	11
8.6 Underground Fiber Cable	12
8.7 Building Fiber Cable	12
8.8 Drop Wire, NID and Placement	13
8.9 Serving Area Interfaces and Terminals	14
8.10 C Rural Wire	14
8.11 Fiber Optic Equipment	15
9. Additional Options	16

NOTICE: The information contained herein is confidential and proprietary and should not be disclosed to unauthorized persons. It is meant for use by authorized representatives of Qwest only.

1. Overview

This section of the Loop Module User Manual includes descriptions of the inputs available to the users and the default values assigned to them. Also included is the source of the data that was used to establish these values. The data is based on the TELRIC economic guidelines. Thus, where current activities are reflective of what would be experienced within the TELRIC structure, that information will be included. Conversely, if the forward-looking equipment/activities/designs are not being implemented on a widespread basis, subject matter experts were consulted to develop an estimate of the appropriate values.

As new or additional data is gathered it will be included in this document.

NOTICE: The information contained herein is confidential and proprietary and should not be disclosed to unauthorized persons. It is meant for use by authorized representatives of Qwest only.

2. Distribution Fill

Description: The data included under the distribution fill header is used to calculate the divisor used in each distribution design. The two values are for Idle Dedicated and Additional Lines percentages. The calculation is the design number of housing units plus the net of the idle dedicated percent and the additional lines percent. For example 400 homes plus (12% additional minus 4% idle dedicated) or 400 homes plus 8% or 432 working lines. The investment for the distribution area will then be divided by the 432 working lines. In addition the user has the ability to set utilization levels that will impact the pairs per site routine. Different fills will adjust where cables taper (e.g. 50 pair spliced to a 25 pair). The result is differing footages of the various cables, as the total sheath footage will remain the same. The Idle Dedicated and Additional Line percentages can only be edited in the Loop Module. They are not in the ICM edit screens.

Default values:

Distribution Fill	Percentages
Idle Dedicated	4.00%
Additional Lines	17.12%

Density Group Specific	
	Percentages
DG1	50%
DG2	50%
DG3	33%
DG4	33%
DG5	50%

Support: The idle dedicated percentage is calculated by subtracting working lines from assigned lines and dividing the result by the number of available lines. This information is provided by network from the Utilize database. The additional line percentage is developed from data out of the IFT database. The IFT reports show in-service quantities for products and services. The default-input fills are based on Qwest network guidelines of two pairs per site in multi-family and low density and three pairs per site for single family residential.

NOTICE: The information contained herein is confidential and proprietary and should not be disclosed to unauthorized persons. It is meant for use by authorized representatives of Qwest only.

3. Feeder Fill

Description: The feeder fill is the factor by which feeder cable capacity is increased above the size needed to serve a given quantity of demand in order to provide spare pairs for breakage, line administration, and some amount of growth.

Default values:

Feeder Fill for Copper Cable

	Percent
	80%

Support: The effective fill factor that is generated is typically less than the corresponding input feeder fill factor. This is due to discrete cable sizes that will result in a selected cable providing more pairs than the calculation requires.

4. Average Drop Lengths

Description: The drop wire is the facility that extends from the nearest distribution terminal to the customer's premises. The lengths for that facility are broken out by aerial versus buried and by distribution density group. Only density groups 3, 4 and 5 use drops. Density groups 1 and 2 would utilize an entrance facility as opposed to a drop wire.

Default values:

Average Aerial and Buried Drop Lengths

	Lengths
Aerial Drop Length - Density Group 3	70
Aerial Drop Length - Density Group 4	200
Aerial Drop Length - Density Group 5	300
Buried Drop Length - Density Group 3	70
Buried Drop Length - Density Group 4	200
Buried Drop Length - Density Group 5	300

Support: The drop lengths are a function of the lot size. These are Qwest wide default lengths. When applied to the state specific mix of density groups they produce a statewide average drop length of approximately 110 to 120 feet. Surveys of existing drops in New Mexico, North Dakota, Minnesota and Wyoming have produced statewide averages from 150 to 180 feet. These averages are conservative as they exclude drops in excess of a certain length.

NOTICE: The information contained herein is confidential and proprietary and should not be disclosed to unauthorized persons. It is meant for use by authorized representatives of Qwest only.

5. Placement Costs

Description: The placement costs are the contracted costs for various activities involving placement of buried plant. The placement costs are added to the cost of buried cable on a per cable foot basis. The cost added is a weighted average of the costs of each activity. This weighting is unique to each distribution density group and to urban and rural feeder. The weightings are discussed below in the Placement Percentages section.

Default values:

Placement Costs	Costs
2" Directional Bore	$10.74
4" Directional Bore	$14.33
Cut & Restore Asphalt	$14.68
Lay Cable	$0.46
Plow Cable	$1.19
Plow Cable - Rocky	$12.86
Missile	$11.17
Restore Sod / Gravel	$4.68
Fiber Trench	$3.80
Hydro Mulch	$3.30
Cut & Restore Concrete	$16.88
Trench Cable - Hand	$5.57
Trench Cable - Rocky	$14.66
Trench Cable - Standard	$2.99

Support: The costs for the various activities are drawn from the latest contracts the Network department has for placement of buried plant. Where a state has multiple contractors the number is a weighted average of the different prices. The weighting is based on the number of lines in the areas served by each contractor. Where there are variations on a single activity (e.g. plow - 24", 30' & 36"), those prices are weighted together based on their occurrence.

NOTICE: The information contained herein is confidential and proprietary and should not be disclosed to unauthorized persons. It is meant for use by authorized representatives of Qwest only.

6. Placement Percentages

Description: The placement percentages are used to weight together the various activities involving placement of buried plant. The cost added to the buried cable is based on this weighting. The weighting is unique to each distribution density group and to urban and rural feeder.

Default values:

Placement Percentages - Distribution

	DG1	DG2	DG3	DG4	DG5
Trench & Backfill	20%	25%	25%	30%	0%
Rocky Trench	5%	5%	5%	2%	0%
Plow	0%	0%	0%	28%	60%
Rocky Plow	0%	0%	0%	0%	5%
Cut & Restore Concrete	15%	10%	5%	3%	5%
Hand Dig Trench	5%	5%	5%	4%	5%
Bore Cable	20%	30%	45%	20%	5%
Cut & Restore Asphalt	20%	10%	10%	6%	5%
Cut & Restore Sod	15%	15%	5%	7%	NA
Hydro Mulch	NA	NA	NA	NA	15%

Placement Percentages - Feeder

	Urban	Rural
Trench & Backfill	30%	0%
Rocky Trench	5%	0%
Plow	0%	60%
Rocky Plow	0%	5%
Cut & Restore Concrete	15%	5%
Hand Dig Trench	5%	5%
Bore Cable	10%	5%
Cut & Restore Asphalt	20%	5%
Cut & Restore Sod	15%	NA
Hydro Mulch	NA	15%

Support: The activity percentages are a mix of placement methods that would be used to replace the existing network as well as grow it during the current feeder planning period. The percentages are based on the growth rates and interviews with outside plant engineers who were responsible for cable rehab work. The question to the engineers was phrased to address the type of activities that they would expect to use when cable placement is done in mature, existing areas. Data was also drawn from Qwest experience in placing plant for the Broadband trial in Omaha, NE. In addition, a citywide CATV rebuild in one of the states within the Qwest region provided support to the utilization of boring in mature areas.

NOTICE: The information contained herein is confidential and proprietary and should not be disclosed to unauthorized persons. It is meant for use by authorized representatives of Qwest only.

7. Sharing Percentages

Description: The sharing percentages are a recognition that there will be a reduction in placing costs due to either trench provided by a land developer or multiple facility providers using the same poles, trenches or conduit systems. The impact of these two scenarios is decidedly different. With trench provided by a developer, the only cost experienced by the facility provider is the cost of laying the cable in the open trench. With multiple facility providers using a common structure, the question of sharing becomes more complicated. Poles for instance, may be jointly owned or they may be accessed through the use of attachment fees. One constitutes a capital investment, while the other is an annual expense.

Default values:

Sharing Percentages	Percentage
Aerial - Poles	50%
Underground- Conduit	5%
Buried - Urban Feeder	20%
Buried - Rural Feeder	20%
Buried - Distribution Density Group 1	20%
Buried - Distribution Density Group 2	20%
Buried - Distribution Density Group 3	20%
Buried - Distribution Density Group 4	20%
Buried - Distribution Density Group 5	20%

Support: The sharing percentages are an estimate of the portion of the structure cost that will be avoided through a mix of jointly owned structure and developer provided trenching. Certain work activities, such as actually laying a cable in the trench would not be reduced or shared, even if there are multiple facilities in a trench. The percentages are based on historical data, access line growth rates, and the opinions of outside plant subject matter experts.

NOTICE: The information contained herein is confidential and proprietary and should not be disclosed to unauthorized persons. It is meant for use by authorized representatives of Qwest only.

8. Network Component Prices

Description: The sections below detail the various components that are used in each of the network categories (cables, terminals, DLC, etc.).

8.1 Buried Copper Cable and Stubs

Description: The cost per foot for buried copper cables, including material, supply, engineering, and splicing. Placing for buried is discussed in sections 6 and 7. The cable stub costs are on a per cable basis for a 30 foot stub.

Default values:

Buried Copper Cables & Stubs	Cost
25 pair - 22 gauge	$1.23
50 pair - 22 gauge	$1.49
100 pair - 22 gauge	$2.07
200 pair - 22 gauge	$3.19
300 pair - 22 gauge	$4.42
400 pair - 22 gauge	$5.63
600 pair - 22 gauge	$8.34
25 pair - 24 gauge	$0.95
50 pair - 24 gauge	$1.32
100 pair - 24 gauge	$1.74
200 pair - 24 gauge	$2.61
300 pair - 24 gauge	$3.50
400 pair - 24 gauge	$4.46
600 pair - 24 gauge	$6.26
900 pair - 24 gauge	$9.16
1200 pair - 24 gauge	$11.75
1800 pair - 24 gauge	$16.09
600 pair - 26 gauge	$6.26
900 pair - 26 gauge	$9.16
1200 pair - 26 gauge	$11.75
1800 pair - 26 gauge	$16.09
50 pair - 24 gauge - stub	$672.00
100 pair - 24 gauge - stub	$691.22
300 pair - 24 gauge - stub	$790.04
400 pair - 24 gauge - stub	$826.67
600 pair - 24 gauge - stub	$916.31
900 pair - 24 gauge - stub	$987.37

Support: The cable material costs are provided by the Qwest network organization. They are based on the latest prices Qwest is paying for these components.

NOTICE: The information contained herein is confidential and proprietary and should not be disclosed to unauthorized persons. It is meant for use by authorized representatives of Qwest only.

8.2 Underground Copper Cable and Stubs

Description: The cost per foot for underground copper cables, including material, supply, engineering, placing and splicing. Underground structure is discussed in sections 3. The cable stub costs are on a per cable basis for a 30 foot stub.

Default values:

Underground Copper Cables & Stubs	Cost
25 pair - 22 gauge	$2.22
25 pair - 24 gauge	$1.95
50 pair - 22 gauge	$2.49
100 pair - 22 gauge	$3.06
200 pair - 22 gauge	$4.19
300 pair - 22 gauge	$5.42
400 pair - 22 gauge	$6.62
50 pair - 24 gauge	$2.31
100 pair - 24 gauge	$2.74
200 pair - 24 gauge	$3.61
300 pair - 24 gauge	$4.50
400 pair - 24 gauge	$5.46
600 pair - 24 gauge	$8.20
900 pair - 24 gauge	$10.16
1200 pair - 24 gauge	$12.31
1800 pair - 24 gauge	$16.86
600 pair - 26 gauge	$6.57
900 pair - 26 gauge	$8.77
1200 pair - 26 gauge	$10.41
1800 pair - 26 gauge	$14.18
2400 pair - 26 gauge	$17.07
3000 pair - 26 gauge	$21.74
3600 pair - 26 gauge	$25.57
4200 pair - 26 gauge	$33.39
900 pair - 24 gauge - stub	$987.37

Support: The cable material costs are provided by the Qwest network organization. They are based on the latest prices Qwest is paying for these components.

NOTICE: The information contained herein is confidential and proprietary and should not be disclosed to unauthorized persons. It is meant for use by authorized representatives of Qwest only.

8.3 Building Copper Cable and Inside Terminals

Description: The cost per foot for building copper cables, including material, supply, engineering, placing and splicing. The inside terminals and connecting block costs are on a per item basis.

Default values:

Building Copper Cables & Inside Terminals	Cost
25 pair - 24 gauge	$3.20
50 pair - 24 gauge	$3.57
100 pair - 24 gauge	$3.99
600 pair - 24 gauge	$8.51
900 pair - 24 gauge	$11.41
50 pair - Inside Terminal	$567.35
100 pair - Inside Terminal	$846.27
600 pair - Inside Terminal	$4,693.31
900 pair - Inside Terminal	$6,963.51
50 pair - Connecting Block	$119.41

Support: The cable and terminal material costs are provided by the Qwest network organization. They are based on the latest prices Qwest is paying for these components.

NOTICE: The information contained herein is confidential and proprietary and should not be disclosed to unauthorized persons. It is meant for use by authorized representatives of Qwest only.

8.4 Aerial Copper Cable and Terminal

Description: The cost per foot for aerial copper cables, including material, supply, engineering, placing and splicing. The terminal costs are on a per item basis.

Default values:

Aerial Copper Cables & Terminal	Cost
25 pair - 24 gauge	$1.31
12 pair terminal	$82.40
50 pair - 22 gauge	$2.38
100 pair - 22 gauge	$2.96
200 pair - 22 gauge	$4.08
300 pair - 22 gauge	$5.31
400 pair - 22 gauge	$6.52
600 pair - 22 gauge	$9.23
900 pair - 22 gauge	$12.41
50 pair - 24 gauge	$2.42
100 pair - 24 gauge	$2.39
200 pair - 24 gauge	$3.52
300 pair - 24 gauge	$4.39
400 pair - 24 gauge	$5.35
600 pair - 24 gauge	$7.15
900 pair - 24 gauge	$10.05

Support: The cable and terminal material costs are provided by the Qwest network organization. They are based on the latest prices Qwest is paying for these components.

NOTICE: The information contained herein is confidential and proprietary and should not be disclosed to unauthorized persons. It is meant for use by authorized representatives of Qwest only.

8.5 Buried Fiber Cable

Description: The cost per foot for buried fiber cables, including material, supply, engineering, and splicing. Placing for buried cables is discussed in sections 6 and 7.

Default values:

Buried Fiber Cables	Cost
2 fiber cable	$1.68
4 fiber cable	$1.73
6 fiber cable	$1.78
12 fiber cable	$1.94
24 fiber cable	$2.24
36 fiber cable	$2.62
48 fiber cable	$2.95
72 fiber cable	$3.62
96 fiber cable	$4.42
144 fiber cable	$5.86
216 fiber cable	$7.71

Support: The cable and terminal material costs are provided by the Qwest network organization. They are based on the latest prices Qwest is paying for these components.

NOTICE: The information contained herein is confidential and proprietary and should not be disclosed to unauthorized persons. It is meant for use by authorized representatives of Qwest only.

8.6 Underground Fiber Cable

Description: The cost per foot for underground fiber cables, including material, supply, engineering, placing, and splicing. Underground structure is discussed in sections 3.

Default values:

Underground Fiber Cables	Cost
2 fiber cable	$1.28
4 fiber cable	$1.33
6 fiber cable	$1.39
12 fiber cable	$1.55
24 fiber cable	$1.89
36 fiber cable	$2.25
48 fiber cable	$2.58
72 fiber cable	$3.07
96 fiber cable	$3.98
144 fiber cable	$5.36
216 fiber cable	$7.40

Support: The cable material costs are provided by the Qwest network organization. They are based on the latest prices Qwest is paying for these components.

8.7 Building Fiber Cable

Description: The cost per foot for building fiber cables, including material, supply, engineering, placing, and splicing. No structure cost is included, as the building owner would provide the duct or raceway.

Default values:

Building Fiber Cable	Costs
12 fiber cable	$2.47
24 fiber cable	$2.81

Support: The cable material costs are provided by the Qwest network organization. They are based on the latest prices Qwest is paying for these components.

NOTICE: The information contained herein is confidential and proprietary and should not be disclosed to unauthorized persons. It is meant for use by authorized representatives of Qwest only.

8.8 Drop Wire, NID and Placement

Description: The cost per foot for the drop wire, cost per foot for the placing, the labor for the placing of the protector and the termination of the wires, the cost for the protector material, and the trip or mobilization charge.

Default values:

Drop Wire	Costs
Buried 2 pair Drop -	
Placing per foot under 100 feet	$1.26
Placing per foot over 100 feet	$1.21
Protector & Termination Labor	$34.89
Drop material	$0.09
Protector material	$14.85
Mobilization	$41.32
Buried 3 pair Drop -	
Placing per foot under 100 feet	$1.26
Placing per foot over 100 feet	$1.21
Protector & Termination Labor	$34.89
Drop material	$0.11
Protector material	$14.85
Mobilization	$41.32
Aerial 2 pair Drop -	
Aerial Drop per foot	$0.70
Protector & Termination Labor	$34.89
Drop material	$0.21
Protector material	$14.85

Support: The drop material and placement costs are from the latest contracts Qwest has with outside vendors for the provisioning of drop facilities. The mobilization charge is adjusted to reflect the placement of multiple drops per visit as would be likely in a scorched node or network rebuild scenario.

NOTICE: The information contained herein is confidential and proprietary and should not be disclosed to unauthorized persons. It is meant for use by authorized representatives of Qwest only.

8.9 Serving Area Interfaces and Terminals

Description: The cost per item for Serving Area Interfaces (SAI) or cross-connect boxes and distribution terminals or pedestals. The SAI is the connection point between feeder cables and distribution cables and provides flexibility in assignment of pairs. The terminals are the connection point between distribution cables and the drops.

Default values:

SAIs and Terminals	Costs
10 pair pedestal terminal	$214.11
12 pair encapsulated splice terminal	$55.73
600 pair SAI	$1,545.15
1200 pair SAI	$4,444.37
1800 pair SAI	$6,439.13
2700 pair SAI	$9,380.22
Splice Closure	$207.32

Support: The SAI and terminal costs are provided by the Qwest network organization. They are based on the latest prices Qwest is paying for these components.

8.10 C Rural Wire

Description: The cost per wire foot for C-Rural Wire, including material, supply, engineering, and placing.. C Wire is a high tensile, single pair facility that is used in low density or rural applications.

Default values:

C- Rural Wire	Costs
1 pair wire	$0.23

Support: The wire material costs are provided by the Qwest network organization. They are based on the latest prices Qwest is paying for these components.

NOTICE: The information contained herein is confidential and proprietary and should not be disclosed to unauthorized persons. It is meant for use by authorized representatives of Qwest only.

8.11 Fiber Optic Equipment

Description: The cost for central office and remote channel and terminal equipment for the fiber based Digital Loop Carrier systems. The costs include material, supply and installation.

Default values:

Fiber Optic Equipment	Costs
1344 Line Remote Terminals	
C.O. Terminal	$17,497.57
Remote Terminal	$81,231.03
Quad POTS Channel Unit	$265.71
Quad ISDN Channel Unit	$891.07
672 Line Remote Terminals	
C.O. Terminal	$8,748.79
Remote Terminal	$57,090.98
Quad POTS Channel Unit	$265.71
Quad ISDN Channel Unit	$891.07
32 Line Remote Terminals	
C.O. Terminal (HDT)	$21,946.74
Remote Terminal	$20,874.46
Quad POTS C.O. Channel Unit	$245.10
ISDN C.O. Channel Unit	$297.42
Quad POTS Remote Channel Unit	$276.41
ISDN Remote Channel Unit	$297.41
96 Line Remote Terminals	
C.O. Terminal 1 (1st RT)	$5,953.99
C.O. Terminal 2 (Additional RTs)	$3,557.21
Remote Terminal	$30,910.00
Quad POTS Channel Unit	$154.86
Quad ISDN Channel Unit	$867.92
192 Line Remote Terminals	
C.O. Terminal 1 (1st RT)	$9,511.19
C.O. Terminal 2 (Additional RTs)	$3,557.21
Remote Terminal	$44,631.00
Quad POTS Channel Unit	$154.86
Quad ISDN Channel Unit	$867.92

Support: The system costs are provided by the Qwest network organization. They are based on the latest prices Qwest is paying for these components.

NOTICE: The information contained herein is confidential and proprietary and should not be disclosed to unauthorized persons. It is meant for use by authorized representatives of Qwest only.

9. Additional Options

Description: There are several options on the first screen, which are essentially driven by the type of study being done. For instance, the Process Group option allows the user to select All Wire Centers, Specific Wire Centers or one of three MSA zone wire center groups. Two items, though, are Qwest defaults that are used across all studies. These selections are Feeder Model and Pairs Per Site. The Feeder Model selection allows the user to select the 12-kilofoot standard shift from physical copper to a Digital Loop Carrier or build a custom feeder model. The Pairs Per Site allows the user to select the number of pairs engineered to each living unit.

Default values:

Feeder Model - 12 kilofeet

Pairs Per Site - Engineering Standard (2 pairs for DG1, 2 & 5; 3 pairs for DG3 & 4)

Support: The 12-kilofoot crossover is based on guidelines from the Qwest network group. The objective is to minimize facility cost as well as assure that all plant will support both voice and advanced (xDSL) services. The Engineering Standard Pairs Per Site selection is supported, once again, by network guidelines to furnish enough facilities to allow for timely response to customer requests for service, while minimizing construction expenditures.

NOTICE: The information contained herein is confidential and proprietary and should not be disclosed to unauthorized persons. It is meant for use by authorized representatives of Qwest only.

BEFORE THE ARIZONA CORPORATION COMMISSION

WILLIAM A. MUNDELL
CHAIRMAN
JIM IRVIN
COMMISSIONER
MARC SPITZER
COMMISSIONER

IN THE MATTER OF INVESTIGATION INTO QWEST CORPORATION'S COMPLIANCE WITH CERTAIN WHOLESALE PRICING REQUIREMENTS FOR UNBUNDLED NETWORK ELEMENTS AND RESALE DISCOUNTS	)	**DOCKET NO. T-00000A-00-0194** **AFFIDAVIT OF** Richard J. Buckley Jr.
STATE OF COLORADO	)	
COUNTY OF DENVER	)	

Richard J. Buckley Jr., of lawful age being first duly sworn, depose and states:

1. My name is Richard J. Buckley Jr. I am a Manager - Loop Costs - Market Services and Economic Analysis of Qwest Corporation in Denver, Colorado. I have caused to be filed written testimony and exhibits in support of Qwest Corporation in Docket No. T-00000A-00-0194.

2. I hereby swear and affirm that my answers contained in the attached testimony to the questions therein propounded are true and correct to the best of my knowledge and belief.

Further affiant sayeth not.

Richard J. Buckley Jr.

SUBSCRIBED AND SWORN to before me this 13th day of March, 2001.

Jennifer Rogers
Notary Public residing at
Denver, Colorado

My Commission Expires: May 17, 2003

BEFORE THE ARIZONA CORPORATION COMMISSION

WILLIAM A. MUNDELL
CHAIRMAN
JAMES M. IRVIN
COMMISSIONER
MARC SPITZER
COMMISSIONER

IN THE MATTER OF INVESTIGATION INTO QWEST CORPORATION'S COMPLIANCE WITH CERTAIN WHOLESALE PRICING REQUIREMENTS FOR UNBUNDLED NETWORK ELEMENTS AND RESALE DISCOUNTS	)	**DOCKET NO. T-00000A-00-0194 PHASE II**

DIRECT TESTIMONY OF

WILLIAM L. FITZSIMMONS

FOR

QWEST CORPORATION

March 15, 2001

TESTIMONY INDEX

Page

I. INTRODUCTION AND PURPOSE OF TESTIMONY 1

II. ONE LOOP – TWO DEDICATED CONNECTIONS 5

III. LINE SHARING AND TELRIC 8

IV. THE CRITICAL ROLE OF PRICING 13

V. LINE SHARING RECOMMENDATIONS 23

VI. TELRIC PRINCIPLES 25

I. INTRODUCTION AND PURPOSE OF TESTIMONY

Q. PLEASE STATE YOUR NAME AND POSITION.

A. My name is William Fitzsimmons. I am a Director at LECG; my business address is 2000 Powell Street, Suite 600, Emeryville, CA 94608.

Q. PLEASE DESCRIBE YOUR PROFESSIONAL QUALIFICATIONS.

A. I hold a Ph.D. in Resource Economics from the University of Massachusetts, Amherst. My industry experience prior to joining LECG in 1994 includes two years of modeling demand for private line services for AT&T in New Jersey and six years as an economist and financial modeler for BellSouth in Atlanta. At LECG, my work is focused on the economic analysis and financial modeling of telecommunications issues.

During the past several years, I worked extensively advising telecommunications companies on the construction of forward-looking cost models and testified in numerous regulatory proceedings on cost models and economic policy issues. I also developed financial simulation models of incumbent local exchange providers and entrants for presentation to regulators and for internal use by incumbent telecommunications providers in the United States, Canada, and Australia. My curriculum vitae is attached as Exhibit WLF-1.

Q. WHAT IS THE PURPOSE AND STRUCTURE OF YOUR TESTIMONY?

A. My testimony describes the economic issues related to setting the price for dedicated use of the high-frequency portion of a copper loop. My testimony also sets forth the basic principles for determining prices for unbundled network elements based on total element long-run incremental cost (TELRIC), which

provides background for the pricing of other elements and services at issue in this case.

By defining the high-frequency portion of a loop as an unbundled network element (UNE), the Federal Communications Commission (FCC) has created a pricing conundrum that does not lend itself to resolution using the TELRIC approach used in arbitrations and cost dockets over the past several years. Establishing cost-based prices for distinct physical elements is a difficult process, but at least physical elements lend themselves to systematic cost modeling. Spectrum on a loop is a different kind of UNE. This new UNE, created by advances in electronics and new methods of sharing existing physical loops, does not readily lend itself to systematic cost modeling.

In **Section II, One Loop – Two Dedicated Connections**, I describe the dedicated nature of the loop and highlight the fact that, although there are two connections on a shared line, both connections are dedicated to a single customer. The low-frequency portion of the loop establishes a dedicated connection between the customer and Qwest. The high-frequency portion of the loop (HFPL) establishes a dedicated connection between the customer and a data local exchange carrier (DLEC)[1] such as Rhythms. Each connection is used separately by the customer, and both connections can be used simultaneously. On shared lines, both connections together cause the cost of the loop. This makes the HFPL fundamentally different from usage-based services, such as toll, and add-on services, such as call waiting. Usage-based and add-on services do not cause the cost of the loop.

[1] The term "data" appears to be a misnomer, because some DLECs claim that they expect to use the high-frequency portion of the loop to provide voice services along with high-speed Internet access.

Section III, Line Sharing and TELRIC, explains that line sharing renders incremental cost analysis nearly useless for determining the portion of the loop cost to allocate to the HFPL. When a line is shared between two dedicated uses, the high-frequency and low-frequency portions of the loop are joint products, and all the loop costs are common to these two uses. Since these joint products together cause the cost of the loop, it is appropriate to allocate a reasonable portion of joint loop cost for recovery in the price of the HFPL.

Section IV, The Critical Role of Pricing, describes principles that are relevant to allocating a portion of joint loop costs for recovery by the price of the HFPL. The overriding principle is that the price for the HFPL should attempt to replicate the price that would prevail in a competitive local telecommunications market. This is the price that will comport with the ongoing development of local telecommunications competition in Arizona.

Section V, Line Sharing Recommendations, summarizes my recommendations related to pricing the HFPL.

Section VI, TELRIC Principles, provides an overview of TELRIC principles and the TELRIC methodology. The purpose of TELRIC is to estimate forward-looking, efficient direct costs associated with providing UNEs. TELRIC, plus reasonable allocations of joint and common costs, are used in setting prices for network elements that incumbent local exchange carriers provide to competitive local exchange carriers.

Q. WOULD YOU PLEASE SUMMARIZE THE CONCLUSIONS OF YOUR TESTIMONY?

A. First, when deciding the price for the high-frequency UNE, it is important to recognize that on a shared line, the cost of the loop is a joint cost. A customer receives two dedicated connections over a shared line—one connection over the HFPL and one over the low-frequency portion of the loop. Together, these connections cause the cost of the loop. A cost-based price for use of the high-frequency UNE should, therefore, include recovery of a portion of the cost of the loop.

Second, the HFPL is a legitimate source of funding for the loop network. Loops are used to provide dedicated connections to customers as part of basic local service. For a large number of households, however, the price of basic local service is below the cost of providing this service. Today, Qwest funds the shortfall with above-cost prices for a number of services, such as intraLATA toll and call waiting. These services, however, do not cause the cost of the loop network. The HFPL, in contrast, does cause the cost of the loop, jointly with the low-frequency portion of the loop, and is a more legitimate source for loop-cost funding than the usage-based and add-on services that have served this purpose in the past.

Third, the provisioning of line sharing results in additional network and operational costs. Prices for UNEs should include the incremental facilities and operations costs caused by sharing the loop.

Fourth, impacts from this pricing decision will extend far beyond DSL providers. This decision will influence the build-versus-lease decisions for all competitive

local exchange carriers (CLECs), the financial viability of facilities investments in cable modem and wireless broadband services, and Qwest's future investment decisions.

II. ONE LOOP – TWO DEDICATED CONNECTIONS

Q. WHAT IS THE DISTINGUISHING COST CHARACTERISTIC OF THE UNBUNDLED LOOP?

A. The unbundled loops discussed in cost proceedings over the past several years are provided through the use of distinct, dedicated facilities from incumbent local exchange carrier (ILEC) central offices to end users. The distinct, dedicated nature of this network of loops allows for systematic cost estimation techniques. Facilities required to provide a loop network can be identified; the forward-looking, recurring cost for these facilities can be estimated; and expenses can be attributed to loops based on the relationship between loop investment and overall investment. For costing purposes, loops are facilities that provide dedicated connections to customers, and, until the FCC declared the high-frequency spectrum on a loop an unbundled element, most of the costs associated with UNE loops were distinct from the costs of other UNEs. The TELRIC for providing an unbundled loop is a function of the cost of establishing a loop network and the number of loops provided to end users on that network.

Q. WHAT ARE THE COST IMPLICATIONS OF THE DEDICATED NATURE OF A LOOP?

A. The first principle of cost estimation is cost causation. Costs that are caused by the construction and maintenance of a loop should be attributed to the loop. When a customer is connected to the network with a loop, this connection is

available for the exclusive use of the customer. If the customer chooses not to use the connection, the connection is, nevertheless, always available.

Q. IS THE HIGH-FREQUENCY SPECTRUM ON A COPPER LOOP A DEDICATED CONNECTION TO A CUSTOMER?

A. Yes. In its Line Sharing Order, the FCC declared that one loop can actually comprise dedicated connections from a customer to two different service providers.[2] On a shared line, the high- and low-frequency spectrums are each dedicated for the exclusive use of the customer, whether or not the customer uses the connections. Although the high and low frequencies are used on one loop, the spectrums are not shared. The high-frequency spectrum on a shared line is used to establish a dedicated connection between the DSL provider and a customer; the low-frequency spectrum is used to provide a dedicated connection between Qwest and the same customer. Both dedicated connections can be used simultaneously. For example, a customer with a shared line can simultaneously use the low-frequency connection to make a toll call and the high-frequency connection to access the Internet.

Q. DO SERVICES THAT ARE PROVIDED OVER THE LOOP, SUCH AS USAGE-BASED AND ADD-ON SERVICES, ALSO CAUSE THE COST OF THE LOOP?

A. No. Usage-based services, such as switched access and toll usage, or add-on services, such as call waiting and voice mail, do not cause the cost of the loop.

---

[2] FCC 99-355, Third Report and Order, CC Docket No. 98-147, Released December 9, 1999, Executive Summary, Line Sharing – Unbundling Analysis. ("Line Sharing Order")

Q. WHAT ARE THE COST IMPLICATIONS OF PROVIDING TWO DEDICATED CONNECTIONS OVER A SINGLE LOOP?

A. The marvel of electronics has made it possible to offer two dedicated connections on a single loop without significantly changing the underlying cost of the loop. At the present time, the loop can provide a dedicated voice connection and a dedicated data connection. The way in which each connection is used, however, is not important for cost estimation. The important point for cost estimation is that the loop cost on a shared line is caused by two dedicated connections. Either connection, on its own, requires the loop, whether or not the customer ever uses the connection. None of the loop costs on a shared line are attributable to only one of the two dedicated connections.

Q. IS THE INITIAL USE OF A SHARED LINE (THAT IS, THE TYPE OF CONNECTION USED BY THE CUSTOMER BEFORE SHARING) RELEVANT FOR DETERMINING COST CAUSATION OF THE LINE?

A. No. An example may help to make the point. Assume that, prior to switching to a shared line, Mr. Jones purchased two lines from Qwest. Mr. Jones used the connection on the first line exclusively for access to voice services, and he used the connection on the second line exclusively for Internet access. Now assume that Mr. Jones disconnects one of the telephone lines and uses one shared line for both of his dedicated connections. One of these connections is to Qwest and the other is provided by the DLEC to an Internet service provider. Together these connections cause the cost of the loop; the initial use of a shared line is not relevant for determining cost causation of this line. Perhaps Mr. Jones disconnected the line that he used for voice service and is now using the line that was used previously for Internet access. This does not mean that the Internet

connection causes all of the cost of the shared line. Similarly, if Mr. Jones disconnected his Internet line when he began using a shared line, it would be incorrect to conclude that the voice connection causes all of the cost of the shared line. The two connections jointly cause the cost of the shared line. This Commission established the TELRIC of a loop. It must now determine a reasonable amount of this cost to allocate for recovery by the price of the HFPL on shared lines.

III. LINE SHARING AND TELRIC

Q. WHAT RELATIONSHIP DID THE FCC ORIGINALLY ESTABLISH BETWEEN UNBUNDLED NETWORK ELEMENTS AND TELRIC?

A. In its First Report and Order, the FCC made it clear that the prices for a UNE should be based on the element's TELRIC plus a reasonable share of joint and common costs.[3] In an earlier proceeding, the Arizona Commission approved UNE prices that are consistent with the TELRIC methodology and include an allocation of common costs.[4]

Q. IS THE STANDARD TELRIC METHODOLOGY APPLICABLE TO PRICING THE HIGH-FREQUENCY PORTION OF THE LOOP?

A. No. TELRIC analysis was designed for estimating direct costs. In the context of

---

[3] FCC 96-325, First Report and Order, CC Docket Nos. 96-98 and 95-185, Released August 8, 1996, paragraph 29. ("First Report and Order")

[4] In Iowa Utils. Bd. v. FCC, 219 F.3d 744 (8th Cir. 2000), the United States Court of Appeals for the Eighth Circuit vacated portions of the FCC's TELRIC pricing rules, including 47 C.F.R. 51.505(b)(1). While this decision ultimately could affect the prices of the underlying UNE loop and, therefore, affect the pricing for the HFPL, my conclusions in this testimony regarding the appropriate method for dividing costs between two dedicated uses of the loop apply under the FCC's pricing rules both before and after the Eighth Circuit's decision.

TELRIC analysis, costs that are shared by two network elements are common to those elements and should be allocated to those elements. TELRIC analysis does not, however, offer a clear method for selecting the most reasonable allocation of these common costs.

When a line is shared between two dedicated uses, all the loop costs are common to these two uses. This is a situation of jointly produced services. Nineteenth century economist John Stuart Mill provides a succinct explanation of joint services:

> It sometimes happens that two different commodities have what may be termed joint cost of production. They are both products of the same operation...and the outlay is incurred for the sake of both together, not part for one and part for the other.[5]

This statement is as true today as it was over one hundred years ago. When a shared line is used to provide two dedicated connections, these connections are jointly provided, and the cost to provide the loop is "incurred for the sake of both together, not part for one and part for the other."

Q. IN ITS LINE SHARING ORDER, DOES THE FCC RECOGNIZE THIS PRICING CONUNDRUM?

A. Yes. In the Line Sharing Order, the FCC states that:

> [W]e must extend the TELRIC methodology to this situation and adopt a reasonable method for dividing **shared loop costs**.[6] [emphasis added]

---

[5] Mill, John Stuart. "Principles of Political Economy," Longmans, Green and Co., 1929 (First Edition 1869), pp. 569-570.

[6] Line Sharing Order, paragraph 138.

In the FCC's words: "the TELRIC methodology that the Commission adopted in the *Local Competition First Report and Order* does not directly address this issue."[7] Again, in the FCC's own words, the issue is how to divide shared loop costs. In the context of TELRIC analysis, costs that are shared by two network elements are common to those elements and should be allocated to those elements. TELRIC provided the methodology for estimating the underlying cost of the loop. It does not, however, offer a meaningful basis for selecting the most reasonable allocation of a portion of this cost for recovery by the price of the HFPL.

Q. WHAT IS THE IMPACT OF LINE SHARING ON THE AMOUNT OF JOINT COSTS ASSOCIATED WITH THE HFPL?

A. With the high-frequency spectrum designated as a UNE, most of the loop costs for shared lines are recast as joint costs. For the purpose at hand, joint costs are costs that are common to a subset of network elements or services. If there is only one dedicated customer connection, then this connection causes the entire cost. If there are two dedicated connections, then together these connections cause the cost of the loop. Providing two dedicated connections on one line drives the direct cost of the loop toward zero for either connection, leaving virtually the entire loop costs common to both.

Q. WHAT GUIDANCE DOES THE FCC PROVIDE REGARDING THE ALLOCATION AND RECOVERY OF JOINT AND COMMON COSTS?

A. In the First Report and Order, the FCC recognized that:

> Certain common costs are incurred in the provision of network

[7] Id., paragraph 138.

> elements...**some of these costs are common to only a subset of the elements or services provided by incumbent LECs. Such costs shall be allocated to that subset, and should then be allocated among the individual elements or services in that subset, to the greatest possible extent**...Because forward-looking common costs are consistent with our forward-looking, economic cost paradigm, a reasonable measure of such costs shall be included in the prices for interconnection and access to network elements.[8] [emphasis added]

The FCC recognized that costs that are common to a subset of elements or services (i.e. joint costs) should be allocated to that subset.

Q. WHEN LINE SHARING RECASTS THE LOOP COSTS AS A JOINT COST, HOW SHOULD THIS COMMISSION CONSIDER THE COST-BASED PRICE FOR THE HFPL?

A. This Commission is now faced with the challenge of allocating a portion of the joint loop cost on a shared line for recovery by the price of the HFPL. The costing portion of this exercise includes the recognition that the price of this UNE should recover a portion of the underlying loop cost. There is no single "correct" allocation of joint and common costs. In setting the cost-based prices for other UNEs, this Commission adopted what it deemed the most reasonable method of allocating common costs to the UNEs. The key question for pricing the HFPL is: given the cost of an unbundled loop and the incremental cost of line sharing, what price is consistent with the competitive solution and furthers the goals for pricing unbundled elements? The answer is that the price should be based on

[8] FCC First Report and Order, paragraph 694.

the most reasonable allocation of the joint loop cost. A zero, or near zero, allocation of joint and common costs is clearly not the most reasonable allocation. It will also preclude the ability of the competitive process to sort out the competitive price for the HFPL.

Q. IS THE HFPL A LEGITIMATE SOURCE OF FUNDING FOR THE LOOP NETWORK?

A. Yes. Loops are used to provide dedicated connections to customers as part of basic local service. For a large number of households, however, the price of basic local service is below the cost of providing this service; it is even below the cost-based prices of unbundled loops. Today, Qwest funds the shortfall with above-cost prices for a number of services, such as intraLATA toll and call waiting. These services, however, do not cause the cost of the loop network, and they are not sustainable sources of funding for the loop network in a competitive environment. Qwest is no longer the only firm providing services across its loop networks, and an increasing number of customers are receiving local telecommunications services from wireless and cable TV (CATV) service providers. The time is rapidly approaching when it will no longer be feasible for Qwest to fund below-cost basic local service for residential customers with revenues from current sources. It will be necessary to find other sources of revenue to recover the full cost of residential loops, or it may even be necessary to stop providing service, at least in high-cost geographic areas. The HFPL is a legitimate source of funding for the loop network. Along with its joint product (the low-frequency portion of the loop), the HFPL causes the cost of the loop. It is appropriate to allocate a portion of joint loop cost for recovery in the price of the HFPL.

Q. CAN YOU EXPLAIN WHY AN XDSL PROVIDER USING ONLY THE HIGH-FREQUENCY SPECTRUM MAY CAUSE HIGHER COSTS THAN COMPETITORS THAT USE ALL OF THE LOOP?

A. A DSL provider that chooses to use only the high-frequency spectrum on a loop causes incremental costs that are not caused by competitors that use all of the loop. These costs are not related to the cost of the underlying loop. For all of the reasons described above, users of the high-frequency spectrum on a loop should contribute to recovery of the cost of the loop. In addition to the cost of the loop, however, it is my understanding that xDSL providers that lease only the high-frequency spectrum of the loop cause incremental costs associated with dividing the loop between two service providers. These incremental costs include the cost of splitters and line conditioning costs. The fundamental principle of cost causation dictates attributing the incremental costs caused by leasing only part of the loop to the xDSL firms that cause these costs. Competitors that use the entire loop (including Qwest) do not cause these costs.

IV. THE CRITICAL ROLE OF PRICING

Q. WHAT ARE THE IMPLICATIONS OF EMERGING DSL COMPETITION FOR PRICING THE HFPL?

A. Given the escalating demand for high-speed access, the rapid evolution of multiple technologies to compete for this demand and the certainty that technological change will continue apace, this Commission should adopt pricing policies that comport with the ongoing development of a competitive local telecommunications market in Arizona. The Commission need not regulate for

the distant future; it only need realize that the rules it adopts now should fit smoothly into the developing competitive framework. If the Commission does not set a price for the HFPL that recognizes the joint-cost nature of a shared loop and comports with a reasonable competitive allocation of this joint cost, harm to competition, efficiency, and investment in the telecommunications infrastructure will result.

Q. WHAT IS THE OVERRIDING CRITERION FOR DETERMINING THE PORTION OF THE SHARED LOOP COST TO ALLOCATE FOR RECOVERY BY THE PRICE OF THE HFPL?

A. The overriding principle for determining the portion of the shared loop cost to allocate for recovery by the price of the HFPL is that this allocation should allow for a competitive outcome to the greatest possible extent. A fundamental economic concept underlying the decision to transform local telecommunications into a competitive market is that competition will provide the proper incentives for more efficient investment and innovation. To achieve this transformation, the FCC mandated that ILECs make productive assets available to competitors at prices that simulate competitive conditions. Under the FCC's concept, prices developed under this methodology will lead to efficient investment decisions during the transformation to competition. In its First Report and Order, the FCC explained its rationale as it relates to CLECs as follows:

> Because a pricing methodology based on forward-looking costs **simulates the conditions in a competitive marketplace**, it allows the requesting carrier [of unbundled elements] to produce efficiently and compete effectively, which should drive retail prices to their

1 competitive levels.[9]

2 For the development of efficient competition, it is also necessary that UNE prices
3 adequately compensate the ILEC that owns the asset. In the First Report and
4 Order, the FCC recognized that this goal is also served by prices for UNEs that
5 replicate competitive prices to the greatest extent possible. The FCC explained
6 its rationale as it relates to the ILECs as follows:

7 The **just and reasonable rate** standard of TELRIC plus a
8 reasonable allocation of the joint and common costs of providing
9 network elements that we are adopting attempts to replicate...the
10 rates that would be charged in a competitive market.[10]

11 In other words, to promote efficient investment, prices for unbundled elements
12 should, from an economic viewpoint, replicate prices that would prevail in a
13 competitive telecommunications market. A price for the HFPL that is out of sync
14 with a price that would reasonably prevail in a competitive market will have a
15 disruptive impact on local telecommunications services competition.

16 **Q. IN A COMPETITIVE TELECOMMUNICATIONS MARKET, WOULD YOU**
17 **EXPECT THE PRICE OF THE HIGH-FREQUENCY UNE TO INCLUDE SOME**
18 **CONTRIBUTION TO THE JOINT LOOP COST?**

19 A. Yes. A competitive firm would not give away the HFPL without expecting
20 something in return. The norm in a competitive market is that a product, service,
21 or productive asset that is in limited supply and that has a positive demand also
22 has a positive price. The expectation of a positive price is even more
23 pronounced when offering a productive asset for lease also precludes its use by

---

9 First Report and Order, paragraph 679.

10 Id., paragraph 740.

the owner of the asset. In the case of the HFPL, leasing the UNE to a competitor also removes the potential for Qwest to use the high-frequency portion of the loop. In a competitive market, it is highly unlikely that any rational provider would give up its ability to provide service using the high-frequency spectrum on its loops without requiring compensation from the potential competitor that will use the spectrum. The strong expectation is, therefore, that a competitive firm would charge a positive price for the use of the high-frequency portion of the loop. I contend that if representatives from any firm were to request free use of productive assets from a firm that was not regulated, these representatives would be looked upon with incredulity. In a competitive market, DLECs could not get something of value for nothing.

Q IN THE EFFORT TO FOSTER AND PROTECT THE DEVELOPMENT OF EFFICIENT COMPETITION, IS IT NECESSARY TO RECOGNIZE THAT NOT ALL COMPETITORS ARE USING QWEST'S FACILITIES?

A. Yes. It is instructive to step back from the consideration of the dispute between Qwest and the "data" LECs related to the price of the HFPL and consider the impacts of this proceeding on other broadband Internet access competitors, such as broadband wireless and cable modem service providers. In a December 2000 speech, the current FCC Chairman, Michael Powell, outlined the following policy challenges:

> Work to harmonize regulatory treatment in a manner consistent with converged technology and markets... recognize that the Digital Migration involves every segment of the communications industry (i.e., telephone, cable, broadcast, wireless, and satellite) and none should be examined in isolation... [and] avoid the temptation to

> "shape" the development of markets and instead let the market mechanism make those decisions.[11]

If this Commission sets an unreasonably low price for the HFPL in an effort to assist DLECs, it may have a damaging impact on the otherwise beneficial development of alternative sources of broadband Internet access competition. High-speed Internet access can be provided over wireless spectrum or spectrum on copper loops. For example, in May of 2000 Sprint entered its first broadband wireless market in Phoenix. Less than two months later, the company expanded service to Tucson.[12] Providers of high-speed Internet access must choose between DSL and broadband wireless for providing service to their customers. This decision will depend in no small part on the cost of the underlying assets, including spectrum.[13] If both types of spectrum are sold at competitive prices, the market will determine the efficient uses of each. This would be non-discriminatory. Setting a price for copper spectrum that is below a level that would be reasonable in a competitive market will discriminate against the use of wireless spectrum.

Q. WILL A LOW OR ZERO PRICE DISCRIMINATE AGAINST FACILITIES-BASED LOCAL COMPETITORS?

A. Yes. Today, the HFPL is used primarily to provide high-speed Internet access to residential and small business customers. DSL providers face stiff competition in

---

[11] Remarks of Michael K. Powell, Commissioner, Federal Communications Commission, before The Progress & Freedom Foundation, "The Great Digital Broadband Migration," Washington, D.C. December 8, 2000. <http://www.fcc.gov/commissioners/Powell/>

[12] Sprint Launches First Broadband Wireless Market in Phoenix," May 8, 2000 <http://www.sprintbroadband.com/prsite/pr/2000/0508-PhoenixPR.html>; "Sprint Launches Second Broadband Market," June 29, 2000 <http://www.sprintbroadband.com/prsite/pr/2000/0629-TucsonLaunch.html>

[13] In the FCC's May 2000 39 Gigahertz auction, Atlantis Bidding Corp., Hyperion, NEXTBAND and Winstar each purchased spectrum in Arizona. In total, these firms bid over $9.8 million for this spectrum, some of which can be used to serve portions of neighboring states.

the market for this service. Just as technology has created the ability to provide high-speed access on the high-frequency spectrum of the loop, it is creating alternative modes of high-speed access, such as cable modem and broadband wireless services. Currently, cable modem service is the leader in this market, with DSL closing the gap in second, and wireless in third.[14] Setting a low price for the high-frequency spectrum on a loop may stimulate short-term consumer benefits by increasing the activity of DSL providers, but in the long term it may also deter facilities-based investments in competing technologies and restrict capital formation by the incumbent local exchange carrier.

Q. ARE CLECs AWARE OF THE PROBLEMS THAT WOULD RESULT FROM A ZERO OR LOW PRICE FOR THE HIGH-FREQUENCY UNE?

A. Yes. In a recent proceeding in Texas, a witness for AT&T, one of the nation's leading CLECs, explained correctly that a low price for the high-frequency UNE will discriminate against facilities-based CLECs by giving other competitors a "free ride" on the loop.[15] AT&T's witness, Mr. Turner, states that "a zero price for HFPL is both anti-competitive and unjustified when viewed in the light of the entire telecommunications marketplace."[16] The importance of this statement is underscored by the fact that AT&T is a leading facilities-based CLEC and the nation's largest cable operator.[17] Mr. Turner further explains that "a zero price for the HFPL permits the CLECs to bear no cost for one of the most important

[14] FCC, *Deployment of Advanced Telecommunications Capability: Second Report*, Released August 2000, p 33.

[15] Turner, Steven, Prefiled Testimony on Behalf of AT&T Communications of Texas L.P., Before the Public Utilities Commission of Texas, Docket Nos. 22168 and 22469, filed September 5, 2000, pp. 17-18.

[16] Turner, p. 16.

[17] AT&T acquired TCI in 1998 for an all-stock transaction valued at approximately $48 billion and MediaOne Group in 2000 in a transaction valued at $44 billion.

assets they utilize in providing their service."[18]

AT&T, through Mr. Turner, describes four reasons why setting a non-zero price is important for the development of efficient competition. Mr. Turner points out correctly that a zero price for the high-frequency spectrum would discriminate:

1) against voice service in favor of Internet access;

2) against carriers who support universal service in favor of carriers who do not;

3) against circuit-switched technology in favor of DSL technology; and

4) against facilities-based competitors in favor of entrants who would "free ride" on a critical component of the network.[19]

For these reasons, Mr. Turner concludes that "setting a zero price for the HFPL will have long lasting negative impacts on the development of competition for this new technology."[20] I would add to AT&T's list that a low, or zero, price for the HFPL would discriminate against the use of wireless spectrum in favor of copper spectrum.

Q. WILL ALLOCATING ANY OF THE LOOP COST TO THE HIGH-FREQUENCY UNE PRECLUDE THE DEVELOPMENT OF EFFICIENT COMPETITION?

A. No. Setting a price that replicates a price that could reasonably prevail in a competitive telecommunications market will promote, not preclude, the development of efficient competition.

---

[18] Turner, p. 16.

[19] Turner, pp. 17-18.

[20] Turner, p. 18.

Q. DO COMPETITIVE SELLERS OF PRODUCTS THAT ARE JOINTLY PRODUCED ALLOCATE COMMON COSTS TO EACH PRODUCT?

A. When competitive producers sell joint products, there is no need for them to make an overt allocation of common costs. Dr. Alfred Kahn noted that:

> [I]n competitive markets sellers do not price on the basis of 'imputed' common costs when those costs must be recovered either in the form of fixed customer charges or on the basis of what the respective services produced with the aid of the inputs will bear. Competitive parity would therefore require that both sets of rivals bear the same loop costs, each recovering them in either of those two ways—not that one set of rivals be totally exempted from them, as proponents of what is labeled 'line sharing' would have it.[21]

For a regulated firm, it is common for regulators to protect competitive neutrality by preventing the incumbent from using its market power to subject competitors to a price squeeze.

Q. WHAT IS A PRICE SQUEEZE?

A. A price squeeze involves the <u>use of market power</u> to reduce the margin between prevailing wholesale and retail prices to the point where the integrated seller has a substantial competitive advantage over retail competitors that are not integrated. In the case of line sharing, it is reasonable for the Arizona Commission to be concerned with ensuring that the incumbent does not use its market power to raise the wholesale price of the high-frequency spectrum above

[21] Reply Declaration of Alfred E. Kahn in Response to Second Further Notice of Proposed Rulemaking, CC Docket 96-98, June 10, 1999, pp. 15-16.

cost to the point that the margins between retail and wholesale prices for efficient competitors do not cover the costs (including reasonable return on investment) of providing the service. For Qwest's DSL offering, this is achieved by setting the price floor equal to the incremental cost of providing the service, including the portion of the common loop cost that it allocates to the HFPL.[22]

Q. CAN A COMPETITOR FACE A REGULATORY INDUCED "SQUEEZE" BETWEEN INPUT COSTS AND RETAIL REVENUES THAT IS NOT BASED ON THE USE OF MARKET POWER BY THE INCUMBENT PROVIDER OF THE WHOLESALE INPUT?

A. In a market that has several methods for delivering a service, such as the market for high-speed Internet access, a firm focused on just one method faces the risk that its competitors may achieve cost reductions that it cannot match. For example, if xDSL firms are able to obtain HFPLs for a very low price, it is foreseeable that the business plans of cable modem or broadband wireless firms will become significantly less attractive. If xDSL firms, with guaranteed low prices for high-frequency spectrum, lower their retail prices, cable modem and broadband wireless providers could experience a squeeze between revenues and costs. This effect would be the result of regulation that favors one group of competitors over others, rather than regulation that allows the market to search for the efficient solution. It would clearly not be the result of an exercise of market power by the supplier of inputs.

[22] Refer to the Direct Testimony of Teresa K. Million for further explanation.

Q. WOULD A POSITIVE PRICE FOR THIS UNE SERVE AS A PRICE CEILING IN A COMPETITIVE MARKET?

A. Yes. Qwest is not the only readily available source of the high-frequency spectrum on loops. As of December 31, 2000, there were 32 active competitors collocated in Qwest's wire centers in Arizona, and 94.3 percent of Qwest's access lines were in wire centers with one or more collocated competitors. Eighty percent of Qwest's access lines were in wire centers with three or more collocated competitors.

The full spectrum of the UNE loop (i.e., an unbundled loop) is available to all CLECs and DLECs at regulated wholesale rates. Both CLECs and DLECs are free to lease an entire loop and sublease either the high- or low-frequency portion to the other. The same result could be obtained through joint ventures between CLECs and DLECs. The terms of arrangements between CLECs and DLECs will result from each side following its own financial incentives. In a competitive market, I expect that CLECs will attempt to lower the effective price they pay for loops by setting a positive price for use of the high-frequency spectrum, while recognizing that the price must be attractive to at least one qualified DLEC. DLECs will attempt to pay as little as possible for use of the high-frequency spectrum, given the recognition that other DLECs may be willing to pay a significant amount for the use of this spectrum. If this Commission sets a reasonable price of the HFPL, the availability of unbundled loops and the free exercise of these incentives will enable a market for the high-frequency spectrum on loops to develop.

This will not be the case if the price of the high-frequency UNE is set at zero, or

close to zero. If, for example, the price is set at zero, the market for loop spectrum described above will not develop. There are many ways that a zero price for this UNE can preclude the development of a competitive price. Consider, for example, the situation in which DLECs set retail prices equal to their costs of serving ILEC customers, including a zero cost to them for use of the high-frequency spectrum on ILEC loops. At these retail prices, DLECs could not afford to pay for spectrum on CLEC loops, which would clearly forestall the development of a market price for the use of this spectrum. A regulated price of zero for use of the HFPL could also introduce another artificial barrier to the development of a market price. If DLECs pay for CLEC spectrum, they may reveal to this Commission that this spectrum does, indeed, command a positive price in the market. DLECs must consider the possibility that revealing a positive market price for this spectrum could motivate this Commission to increase the regulated price of the UNE. Finally, all other factors aside, a firm that can obtain a key asset for free from one source will be reluctant to pay a positive price to another supplier.

V. LINE SHARING RECOMMENDATIONS

Q. WOULD YOU PLEASE SUMMARIZE YOUR FINDINGS AND RECOMMENDATIONS?

A. Line sharing introduces a number of new cost/price considerations. First, when a line is shared, there are two dedicated connections on one copper loop. Loop costs are caused by the dedicated connections on loops. They are not caused by usage across these dedicated connections. On shared lines, loop costs are caused jointly by the two dedicated connections. TELRIC is only applicable to

the estimation of direct costs; it does not apply to joint or common costs. TELRIC, therefore, offers little guidance for determining loop costs associated with the HFPL. Second, line sharing creates a layer of network and operational costs that should be addressed and resolved in regulatory hearings. The price of UNEs related to line sharing should include a portion of the loop cost plus the incremental facilities and operations costs caused by sharing the loop.

The joint nature of loop costs on shared lines leaves this Commission with the difficult task of determining a reasonable allocation of the underlying loop cost to the HFPL. This Commission can take some comfort from the fact that, if the initial price that is set for the HFPL is too high, the market will sort this out and lead to a lower price. Some guidance for setting the initial price for the HFPL is derived from competitive market solutions in roughly analogous situations. It is clear that competitive markets set prices for jointly supplied products. Further guidance is derived from regulatory experience over the past several years. This Commission recognized that prices for UNEs must allow the providing carrier to recover a reasonable allocation of joint and common costs. The FCC, in its First Report and Order, also recognized the need to add joint and, in the broader sense, common costs to TELRIC estimates to provide the basis for cost-based prices.

When all of the evidence is presented, I urge this Commission to step back and consider what is best for the continued development of a competitive local telecommunications market in Arizona. Impacts from this pricing decision will extend far beyond DSL providers. This decision will influence the build-versus-lease decisions for <u>all</u> CLECs, the financial viability of facilities investments in

cable modem and wireless broadband services, and Qwest's future investment decisions.

Within the context of the developing competitive market, this Commission needs to consider the fact that rational entrants are aggressively targeting customers, such as business customers and subscribers to high-margin services, who provide a disproportionate share of funding for the loop network. The HFPL is a product of the loop network, and, as such, it is a legitimate source of revenue to fund the loop network. Indeed, it is a more legitimate source for loop-cost funding than the usage-based and add-on services that have served this purpose for decades.

VI. TELRIC PRINCIPLES

Q. WHAT IS THE PURPOSE OF THIS SECTION OF YOUR TESTIMONY?

A. This section of my testimony provides the economic basis for the TELRIC methodology used to estimate costs for the network elements at issue in this proceeding.

Q. HOW DOES THE TELRIC CONCEPT FIT INTO THE TRANSITION TOWARD COMPETITIVE LOCAL TELECOMMUNICATIONS?

A. A fundamental economic concept underlying the decision to transform local telecommunications into competitive markets is that competition will provide the proper incentives for more efficient investment and innovation. To achieve this transformation, the FCC mandated that ILECs make productive assets available to competitors at prices that attempt to simulate competitive conditions. Under the FCC's concept, prices developed under the TELRIC methodology (plus a

reasonable allocation of joint and common costs) are an attempt to simulate competitive prices that will lead to efficient investment decisions by entrants and incumbents during the transformation to competition. TELRIC is a methodology for estimating forward-looking, efficient, direct costs of building and operating network elements.

Prices for UNEs that are based on TELRIC plus joint and common costs should: 1) compensate the firm that owns the network for the actual costs of building and operating an efficient network; and 2) provide competitors with accurate pricing signals that will result in efficient investment decisions, including build-versus-lease decisions.

Q. WHAT IS TELRIC?

A. TELRIC is the total forward-looking, long run, incremental cost of providing an entire network element, such as an entire loop network for a specified geographic area. When this term is applied to an individual unit of a network element, such as one unbundled loop, TELRIC is the average cost associated with that loop. The TELRIC methodology estimates the cost of building and operating an efficient network, given the best currently available technology.

Q. WOULD YOU PLEASE EXPLAIN THE BASIC METHODOLOGY OF TELRIC?

A. TELRIC is an estimate of the direct costs of building and operating network elements at the level of output provided by the current network, using current build-out conditions, current wire center locations, and the best technology and procedures currently in use. It includes all investments and activities that are incremental to providing a network element with an efficient mix of resources (land, labor, and capital). For the existing loop network, for example, the TELRIC

methodology estimates the direct costs that a reasonably efficient, ubiquitous firm would incur to build and operate a new loop network beginning from the current grid of network nodes. The new network must be designed to serve all end users and provide unbundled elements to entrants. The use of an efficient network design ensures that the standard that guides an entrant's build-versus-lease decision is not distorted by inefficiencies in the telephone network that are a legacy of regulation.

Q. WOULD YOU DESCRIBE SOME OF THE IMPORTANT TELRIC COSTING PRINCIPLES?

A. As applied to providing UNEs with existing facilities, TELRIC is a theoretical construct. For TELRIC to provide meaningful information for setting cost-based prices, it is necessary to follow basic costing principles. Costs should be estimated based on:

1. forward-looking, best available technology based on existing network architecture and actual conditions;

2. actual or realistic, not optimal or idealistic, inputs that are consistent with a high quality network and the incumbent LEC's regulatory obligations;[23]

3. economic depreciation lives and cost of capital; and

4. inclusion of all costs that are incremental to providing network elements.

[23] The findings of the Eighth Circuit Court of Appeals in Iowa Utils. Bd. v. FCC support the appropriate economic reasoning that costs should be based on realistic, not idealistic, assumptions: "Congress has made it clear that it is the cost of providing the actual facilities and equipment that will be used by the competitor (and not some state of the art presently available technology ideally configured but neither deployed by the ILEC nor to be used by the competitor) which must be ascertained and determined."

Q. IS IT NECESSARY TO INCLUDE THE RECOVERY OF JOINT AND COMMON COSTS IN THE COST-BASED PRICES FOR UNBUNDLED NETWORK ELEMENTS?

A. Yes. To reach efficient, cost-based prices for UNEs, it is necessary to allocate reasonable portions of joint and common costs to the costs of providing network elements. Joint and common costs are costs incurred for two or more network elements or services. There are efficiency reasons for the existence of common costs for such functions as legal services and human resources. If the functions included in common costs were separate for each network element or service, there would be substantial duplication of effort and an increase in cost for all services and network elements. These are real costs of doing business, and it is necessary for prices of network elements to contribute to their recovery.

Q. DOES TELRIC PROVIDE MEANINGFUL INFORMATION FOR SETTING COST-BASED PRICES OF UNBUNDLED NETWORK ELEMENTS?

A. Yes. Even though TELRIC is a theoretical construct, properly constructed TELRIC estimates can provide meaningful information regarding direct, forward-looking, efficient costs. TELRIC provides cost estimates that are not encumbered with past depreciation decisions or artificial separations of costs, which are difficult to exclude from embedded cost studies. As such, TELRIC models can provide valuable input for determining appropriate prices for UNEs that are provided over existing facilities.

Q. WHAT HAPPENS IF PRICES ARE NOT SET CORRECTLY?

A. Establishing TELRIC and setting prices of network elements are critical steps toward a policy that promotes efficient and beneficial competition. If sound

1 economic principles are adopted for the costing and pricing of network elements,
2 potential entrants will receive pricing signals which encourage them to use an
3 efficient mix of resale, unbundled elements, and construction of their own
4 facilities. Incorrectly set prices impede the development of competition by
5 sending the wrong pricing signals to potential entrants and fail to properly
6 compensate the incumbents.

7 **Q. DOES THIS CONCLUDE YOUR DIRECT TESTIMONY?**

8 A. Yes.

BEFORE THE ARIZONA CORPORATION COMMISSION

WILLIAM A. MUNDELL
CHAIRMAN
JAMES M. IRVIN
COMMISSIONER
MARC SPITZER
COMMISSIONER

IN THE MATTER OF INVESTIGATION INTO QWEST CORPORATION'S COMPLIANCE WITH CERTAIN WHOLESALE PRICING REQUIREMENTS FOR UNBUNDLED NETWORK ELEMENTS AND RESALE DISCOUNTS	)	**DOCKET NO. T-00000A-00-0194 PHASE II**

EXHIBIT OF

WILLIAM L. FITZSIMMONS

QWEST CORPORATION

March 15, 2001

INDEX OF EXHIBIT

DESCRIPTION	EXHIBIT
Resume of William L. Fitzsimmons	WLF-1

WILLIAM L. FITZSIMMONS

LECG, LLC
2000 Powell Street, Suite 600
Emeryville, CA 94608

Tel. (510) 653-9800
Fax (510) 653-9898
E-mail: wlfitz@lecg.com

EDUCATION

Ph.D., Resource Economics, UNIVERSITY OF MASSACHUSETTS, Amherst, MA, 1986

Emphasis: econometrics, natural resource economics, microeconomics, project evaluation, and industrial organization

M.S., Resource Economics, UNIVERSITY OF MASSACHUSETTS, Amherst, MA, 1981

Emphasis: project evaluation, and economics of forestry

B.S., Economics, STATE UNIVERSITY OF NEW YORK AT STONY BROOK, NY, 1975

PRESENT POSITION

LECG, LLC, Emeryville, CA, December 1993 – present
Managing Director, Global Telecommunications Practice, July 2000 – present
Principal, January 1998 – June 2000
Senior Managing Economist, January 1997 – December 1997
Managing Economist, December 1993 – December 1996

- Construct financial simulation models for the analysis of telecommunications issues, including interconnection policies and competitive entry into the local exchange
- Analyze domestic and international telecommunications issues and provide expert witness testimony for regulatory proceedings and litigation
- Work with telecommunications clients to develop and improve cost models
- Assess impacts to telecommunications firms and competition from uneconomic or unlawful policies and practices
- Analyze and estimate costs related to use of the public rights of way by telecommunications firms

PROFESSIONAL EXPERIENCE

BELLSOUTH CORPORATION, Atlanta, GA, January 1988 - December 1993
Senior Economist, April 1992 - December 1993
Corporate Economist, January 1988 - April 1992

- Applied the tools of economic, financial and quantitative analysis to the identification and solution of a broad range of business problems, and developed recommendations for use by senior management in making policy decisions
- Key role in building model of the telephone company that interconnects behavioral equations for capital spending, expenses, real revenues, regulation, and a production function
- Based on model output, formulated and presented policy recommendations and contingency plans to meet expected changes in BellSouth's business environment, such as more severe competition, alternative regulation, and investment in multimedia
- Assessment of potential impacts of wireless on traditional wireline and cellular services
- Analyzed corporate level impacts of prospective mergers and acquisitions
- Derived econometric model that is used to create capital spending targets for the Telco and explore network investment options
- Analyzed corporation's advertising and publishing business to assist with derivation of a new pricing strategy
- Estimated the financial impacts of proposed permutations of interstate price caps
- Provided financial modeling analysis for the tender and bid process for international investments

AT&T, Bedminster, New Jersey, June 1986 - January 1988
Market Analysis and Forecasting

- Developed econometric forecasting models for telecommunication services; identified direction and financial implications of customer migration among private line services; wrote principal components regression software; presented technical and theoretical papers and seminars

PAPERS FILED WITH REGULATORY AGENCIES

"Competition Report Using the Diagnostic Method for Assessing Competition;" delivered to the Staff of the Public Utilities Commission of Ohio; performed analysis and drafted report with Lori Lent on behalf of Ameritech Ohio, January 6, 2000.

Paper prepared for Telecom New Zealand titled "Review of Network Costing Model Used in Todd Telecommunications Consortium Report," by George Barker, William L. Fitzsimmons, Kieran Murray & Graham Scott dated December 2, 1998

"LECG Financial Simulation Model of Effects of FCC Policies on Large Local Exchange Carriers," by Dr. William Fitzsimmons, Dr. Robert Crandall, Professor Robert G. Harris, and Professor Leonard Waverman, Paper filed with FCC, August 1996

PRESENTATIONS AND REGULATORY PROCEEDINGS

Presentation on "Status and Measurement of Competition," National Association of Regulatory Utility Commissioners (NARUC) Staff Subcommittee on Telecommunications, 2000 Annual Convention, San Diego, California, November 11, 2000.

Expert written testimony and cross-examination on behalf of U S WEST in line sharing price setting proceedings in 2000.

Minnesota (Docket No. OAH 12-2500-12631-2 and MPUC P-421/CI-99-1665)

Washington (Docket No. UT-003013, Part A)

Ex Parte with the FCC on behalf of Ameritech to discuss LECG's analysis of the FCC's Synthesis Model and proposed input values, July 13, 1999.

Joint reply affidavit with Debra Aron and Robert G. Harris on behalf of Ameritech filed with the FCC in the matter of implementation of the local competition provisions in the Telecommunications Act of 1996 (CC Docket No. 96-98); filed June 10, 1999

Expert affidavit on behalf of Ameritech filed with the FCC in the matter of implementation of the local competition provisions in the Telecommunications Act of 1996 (CC Docket No. 96-98); filed May 26, 1999

Expert written testimony and cross-examination on behalf of U S WEST in interconnection arbitration proceedings in 1997

South Dakota (Docket No. TC96-184),

Montana (Docket No. D96.11.200),

Wyoming (Docket Nos. 72000-TS-96-95 and 70000-TS-96-319),

New Mexico (Docket No. 96-411-TC),

North Dakota (Docket No. PU-453-96-497),

Idaho (Docket Nos. USW-T-96-15 and ATT-T-96-2), and

Colorado (Docket No. 96S-331T)

Participated in cost workshops on behalf of U S WEST with the Utah Division of Public Utilities and Minnesota Commission in 1996, 1997, and 1998

Expert written testimony and cross-examination on behalf of U S WEST in consolidated cost dockets in

Arizona (Docket Nos. U-3021-96-448, 1996),

Iowa (Docket No. RPU-96-9, 1997),

New Mexico (Docket Nos. 96-310-TC and 97-334-TC, 1998),

Minnesota (Docket Nos. P-442, 5321, 3167, 466, 421/CI-96-1540, 1998), and

Utah (Docket No. 94-999-01, Phase III, Part C, 1998)

Expert testimony and cross-examination in universal service proceedings on behalf of U S WEST in 1997 and 1998

New Mexico (Docket Nos. 96-310-TC, 97-334-TC),

Minnesota (MPUC Docket No. P-999/M-97-909),

Wyoming (General Order No. 81),

Idaho (Case No. GNR-T-97-22), and

Nebraska (Application No. C-1633)

Expert declarations in support of motions for summary judgment by U S WEST in Iowa (June 1997) and Washington (January 1998)

Presentation on "TELRIC Concepts and Applications," Basics of Regulation Conference, New Mexico State University Center for Public Utilities and the National Association of Regulatory Commissioners, Albuquerque, New Mexico, September 18, 1996

November 2000

BEFORE THE ARIZONA CORPORATION COMMISSION

WILLIAM A. MUNDELL
CHAIRMAN
JIM IRVIN
COMMISSIONER
MARC SPITZER
COMMISSIONER

IN THE MATTER OF INVESTIGATION INTO QWEST CORPORATION'S COMPLIANCE WITH CERTAIN WHOLESALE PRICING REQUIREMENTS FOR UNBUNDLED NETWORK ELEMENTS AND RESALE DISCOUNTS	)	**DOCKET NO. T-00000A-00-0194**
		AFFIDAVIT OF WILLIAM L. FITZSIMMONS
STATE OF CALIFORNIA	)	
COUNTY OF ALAMEDA	)	

William L. Fitzsimmons, of lawful age being first duly sworn, deposes and states:

1. My name is William L. Fitzsimmons. I am a Director at LECG, LLC, in Emeryville, California. I have caused to be filed written testimony and exhibits in support of Qwest Corporation in Docket No. T-00000A-00-0194.

2. I hereby swear and affirm that my answers contained in the attached testimony to the questions therein propounded are true and correct to the best of my knowledge and belief.

Further affiant sayeth not.

William L. Fitzsimmons

SUBSCRIBED AND SWORN to before me this 12th day of March, 2001.

NANCY P. ADAMS
Commission # 1134696
Notary Public — California
San Francisco County
My Comm. Expires May 12, 2001

Notary Public residing at
Emeryville, California

My Commission Expires: May 12, 2001

BEFORE THE ARIZONA CORPORATION COMMISSION

WILLIAM A. MUNDELL
Chairman
JAMES M. IRVIN
Commissioner
MARC SPITZER
Commissioner

IN THE MATTER OF INVESTIGATION INTO QWEST CORPORATION'S COMPLIANCE WITH CERTAIN WHOLESALE PRICING REQUIREMENTS FOR UNBUNDLED NETWORK ELEMENTS AND RESALE DISCOUNTS	)	DOCKET NO. T-00000A-00-0194 PHASE II

DIRECT TESTIMONY OF

D. M. (MARTI) GUDE

QWEST CORPORATION

MARCH 15, 2001

BEFORE THE ARIZONA CORPORATION COMMISSION

WILLIAM A. MUNDELL
Chairman
JAMES M. IRVIN
Commissioner
MARC SPITZER
Commissioner

IN THE MATTER OF INVESTIGATION INTO QWEST CORPORATION'S COMPLIANCE WITH CERTAIN WHOLESALE PRICING REQUIREMENTS FOR UNBUNDLED NETWORK ELEMENTS AND RESALE DISCOUNTS	DOCKET NO. T-00000A-00-0194 PHASE II

DIRECT TESTIMONY OF

D. M. (MARTI) GUDE

QWEST CORPORATION

MARCH 15, 2001

THIS VERSION OF TESTIMONY
CONTAINS CONFIDENTIAL AND PROPRIETARY INFORMATION
AND MAY ONLY BE VIEWED BY THOSE WHO HAVE SIGNED A NONDISCLOSURE
AGREEMENT OF THE PROTECTIVE
ORDER ISSUED IN THIS CASE

TESTIMONY INDEX

		Page
	EXECUTIVE SUMMARY	i
I.	IDENTIFICATION OF WITNESS	1
II.	PURPOSE OF TESTIMONY	3
III.	GENERAL RESALE DISCOUNT ISSUES	
	- Resale Requirements Of The Telecommunications Act of 1996	4
	- Importance Of Appropriate Resale Discounts	6
	- Reliance On FCC Guidelines	7
	- Avoided Cost Study Data	9
	- Reliance On A Multiple Discount Model	13
IV.	QWEST EMBEDDED AVOIDED COST STUDY	
	- Overview	17
	- Guidelines For Preparing Qwest's Embedded Avoided Cost Study	18
	- Basic Strengths And Attributes Of The Qwest Embedded Avoided Cost Study	23
	- Records Employed by Qwest To Develop Resale Discounts	25
	- Embedded Cost Study Avoided Cost Percentages	29
	- Discussion and Analysis Of Avoided Costs	33
	- Description Of Embedded Avoided Cost Study Documentation	54
V.	RESALE DISCOUNT ISSUES REQUIRING "SPECIAL HANDLING"	
	- Packaged/Special Telecommunications Services	58
	- Volume/Term Contract Telecommunications Services	60
	- Operator Services/Directory Assistance	64
	- Summary	65
VI.	CONCLUSIONS AND FINAL RECOMMENDATIONS	67

APPENDIX
A-1 and A-2 Chronology Of Previous Dockets And Testimony

EXECUTIVE SUMMARY

D. M. (Marti) Gude is employed by Qwest Corporation. In her position of Director - Cost Accounting, she is responsible for various regulatory and management accounting functions, including the preparation and analysis of embedded cost studies for purposes such as deregulation, cost accounting and regulatory filings.

Her testimony provides the Commission with the information needed to identify accurately the costs that Qwest avoids in selling retail services on a resale basis. Her testimony also presents Qwest's Embedded Avoided Cost Study and provides the Commission with reasonable, accurate resale discounts that are based on that study. Ms. Gude presents resale discounts for five basic service groupings and provides recommendations for the handling of "packaged / special" services, "volume / term contract" services, and Operator Service/Directory Assistance services.

Ms. Gude's testimony also discusses the provisions of the Telecommunications Act of 1996 ("the Act") relating to resale services and emphasizes the competitive and economic importance of setting appropriate resale discounts. She also explains why resale discounts and avoided costs must be calculated using only costs specific to Qwest's Arizona intrastate operations, not combined interstate/intrastate total State costs.

Ms. Gude explains further that reliance on generic FCC proxy pricing guidelines, which have been vacated and remanded by recent directives from the United States Court of Appeals for the Eighth Circuit, would be inappropriate in this proceeding. She explains why, in keeping with the spirit of Sections 251 (c)(4) and 252 (d)(3) of the Act, the Commission should rely upon an avoided cost model that produces multiple resale discounts, rather than only a single, average resale discount.

The balance of Ms. Gude's testimony sets forth:

- a description of Qwest's avoided cost study methodologies, assumptions, procedures, exhibits, and resale discount results;
- why ARMIS high level data and invalid FCC proxy guidelines cannot be used to calculate accurate resale discounts;
- why Qwest's cost data specific to Arizona intrastate retail telecommunication product offerings must be employed to calculate resale discounts in order to satisfy requirements of the Act;
- the importance of excluding all costs associated with services that are not subject to resale from the calculation of the discounts;

- the FCC Part 32 USOA accounts that contain "retailing" costs and why entire account balances can not simplistically be considered totally avoided;
- why account, sub-account, balances must be carefully analyzed to determine the costs that Qwest will avoid under the resale provisions of the Act;
- how Qwest identified avoided costs and why all costs that are part of intrastate retail rates, including network and general support-related capital costs, must be included in the avoided cost analysis and discount calculations;
- why "recurring rate" resale discount calculations should exclude non-recurring charges and operator service/directory assistance ("OS/DA") costs;
- a description of the Qwest embedded avoided cost study documentation and the study's results;
- why packaged services and non-basic special services should be separately addressed through the development and application of a composite discount; and
- why volume/term contract services and Operator Service/DA service require separate avoided cost analysis.

The product category results of the Qwest embedded avoided cost study are as follows:

Category	Service Description	Discount
Basic - 1	Basic Exchange Business	9.41%
Basic - 2	Toll	23.96%
Basic - 3	Listings, CO Features, & Informational Services	41.51%
Basic - 4	Basic Exchange Residence	4.19%
Basic - 5	Private Line	6.44%
Composite	Packaged/Special Services	10.46%

I. IDENTIFICATION OF WITNESS

Q. PLEASE STATE YOUR NAME AND BUSINESS ADDRESS.

A. My name is D. M. (Marti) Gude. My business address is 1314 Douglas-on-the-Mall, Omaha, Nebraska.

Q. PLEASE IDENTIFY YOUR EMPLOYER AND EXPLAIN YOUR POSITION AND RESPONSIBILITIES.

A. I am employed by Qwest Corporation, formerly known as U S WEST Communications, Inc. ("U S WEST"); my title is Director - Cost Accounting. I am responsible for various regulatory and management accounting functions, including preparing and analyzing embedded cost studies for use in connection with deregulation, cost accounting and regulatory filings.

Q. WHAT IS YOUR EDUCATIONAL BACKGROUND AND PROFESSIONAL EXPERIENCE?

A. I received a Bachelor of Science degree in Business Administration, with a major in Accounting, from the University of Nebraska - Lincoln and a Master of Business Administration degree, with honors, from the University of Nebraska at Omaha. I am

also a Certified Public Accountant, certified in the State of Nebraska as an inactive registrant.

I was a member of the audit staff of Arthur Andersen & Company for four years prior to joining Qwest's predecessors (U S WEST, and Northwestern Bell) in 1979. My experience at Arthur Andersen included audits for companies in various industries, which included the issuance of opinions on financial statements. At Qwest and its predecessors, U S WEST and Northwestern Bell, I have held various positions in the Budget, Finance, Corporate Accounting and Cost Accounting departments. I have worked in the area of cost accounting since January 1986.

Q. HAVE YOU FILED TESTIMONY AND/OR TESTIFIED PREVIOUSLY ON THE SUBJECT OF COST DISTRIBUTION AND/OR COST ACCOUNTING?

A. Yes. Appendix A-1 of my testimony provides a chronological listing of the dockets/cases, by state, in which I have previously testified on the subject of embedded cost studies.

Q. HAVE YOU PARTICIPATED IN OTHER PROCEEDINGS INVOLVING THE IDENTIFICATION OF AVOIDED COSTS AND CALCULATION OF RESALE DISCOUNTS?

A. Yes, I have. Appendix A-2 of my testimony highlights the interconnection arbitration and embedded avoided cost dockets in which I have testified in connection with issues that relate to the determination of avoided costs and establishment of resale discounts.

II. PURPOSE OF TESTIMONY

Q. WHAT IS THE PURPOSE OF YOUR TESTIMONY IN THIS PROCEEDING?

A. The purpose of my testimony is to provide the Commission with information needed to identify accurately the costs that Qwest avoids in selling its retail services on a resale basis. I also present and describe Qwest's "Embedded" Avoided Cost Study[1] for Arizona operations, which I have included as Proprietary Exhibit DMG - 2 to my testimony. This study identifies the embedded costs for Qwest retail services that Qwest avoids when it sells its retail telecommunications services on a wholesale basis to competitive local exchange carriers ("CLECs") and/or other resellers for resale[2].

My testimony discusses the attributes of the Qwest Embedded Avoided Cost Study

---

1 For purposes of this testimony, references to Qwest Corporation ("Qwest") shall encompass the historical operations of its predecessor, U S WEST. In this filing, U S WEST 1999 pre-merger financial data is employed in the Qwest Avoided Cost Study. Although this data is referenced as Qwest data in this testimony, the Avoided Cost Study and Exhibits supporting this testimony reference pre-merger financial data as that of U S WEST.

2 This testimony provides the Commission with information responsive to the resale discount issues remanded by the United States District Court for the District of Arizona in its May 4, 1999 decision in U S WEST v. Jennings, 46 F.Supp.2d 1004 (D. Ariz. 1999)

and establishes that the study complies with the resale requirements of the Telecommunications Act of 1996 ("the Act"). I also describe how the Commission should be guided by the Act and Qwest's detailed cost records and discuss why the Commission should not calculate discounts based on proxy cost data set forth in the now vacated FCC pricing rules relating to resale discounts.[3]

The discounts produced by Qwest's embedded avoided cost study are as follows:

Category	Service Description	Discount
Basic - 1	Basic Exchange Business	9.41%
Basic - 2	Toll	23.96%
Basic - 3	Listings, CO Features, & Informational Services	41.51%
Basic - 4	Basic Exchange Residence	4.19%
Basic - 5	Private Line	6.44%
Composite	Packaged/Special Services	10.46%

III. GENERAL RESALE DISCOUNT ISSUES

Resale Requirements Of The Telecommunications Act Of 1996

Q. WHAT REQUIREMENTS ARE SET FORTH IN THE TELECOMMUNICATIONS ACT OF 1996 FOR ESTABLISHING RESALE

---

3 The United States Court of Appeals for the Eighth Circuit vacated certain FCC pricing rules, including 47 C.F.R. § 51.609 (b) relating to the calculation of resale discounts, in Iowa Utils. Bd. v. FCC, 219 F.3d 744, 751 (8th Cir. 2000).

DISCOUNTS?

A. The Act requires state commissions to set resale discount rates for retail telecommunications services based upon an analysis of the costs inherent in the rates being discounted.

Section 251 (c)(4)(A) of the Act requires telecommunications carriers acting in the capacity of a local exchange carrier, such as Qwest:

> "... to offer for resale at wholesale rates any telecommunications service that the carrier provides <u>at retail</u> to subscribers who are not telecommunications carriers." (Emphasis added).

Section 252 (d)(3) of the Act directs that:

> "A state Commission shall determine wholesale rates <u>on the basis of retail rates</u> charged to subscribers for the <u>telecommunications service</u> requested, <u>excluding the portion thereof</u> attributable to any marketing, billing, collection, and other costs that will be avoided by the local exchange carrier." (Emphasis added).

As this language demonstrates, the Act requires that the wholesale rates must be based on "retail" telecommunications service rates, which means that the discounts must be calculated using only costs that are part of those retail rates. Therefore, in determining which costs Qwest will avoid when selling services on a wholesale basis, only costs that are part of the retail rates can be treated as avoided costs. Thus, the process for calculating the discounts is relatively straightforward: it requires identifying all the costs that make up Qwest's retail telecommunications services rates and determining which of those costs Qwest will avoid when it sells the retail

1 services to CLECs on a wholesale basis.

2

3 **Importance Of Appropriate Resale Discounts**

4

5 **Q. WHY IS IT IMPORTANT FOR THE COMMISSION TO ESTABLISH**
6 **ACCURATE RESALE DISCOUNTS IN THIS PROCEEDING?**

7

8 **A.** The level of resale discounts can have a far-reaching impact on the development of
9 the telecommunications infrastructure and the promotion of capital investment in
10 Arizona. During recent years, Qwest has continued to invest significant capital to
11 grow and maintain its network infrastructure in Arizona, an infrastructure that
12 competitive entrants may now readily use. In replacing Arizona's existing wholesale
13 discounts, the Commission should guard against setting resale discounts that over-
14 estimate the costs Qwest will avoid selling retail services at wholesale. Establishing
15 discounts that over-estimate avoided costs will reduce the incentive for competitive
16 entrants to make their own capital investments in Arizona. Discounts that are too
17 high could cause competitive entrants only to resell Qwest's products and services
18 without investing in their own network infrastructure. This result would have the
19 competitive entrants relying on Qwest's network and would leave Qwest bearing
20 most of the risk of network investment. In addition, if the Commission artificially
21 sets resale discounts too high, Qwest will be deprived of the compensation it requires
22 to fund capital investments that are to be used to provision retail and resale
23 telecommunications services. At the same time, the Commission should not set the

discounts too low, -- that is, below Qwest's avoided costs-- since that would discourage resale competition.

Reliance On FCC Guidelines

Q. DID THE FCC ATTEMPT TO PRESCRIBE CERTAIN RESALE DISCOUNT METHODOLOGIES IN ITS FIRST INTERCONNECTION ORDER, RELEASED ON AUGUST 8, 1996?

A. Yes. In that Order, the FCC described two methods for determining resale discounts. The preferred method required state commissions to determine resale discounts from a Company's detailed avoided cost studies.[4] In the alternative, and only in the absence of a company-specific cost study, the FCC directed state commissions to establish resale discounts based on the FCC's default guidelines, which were not company-specific and, instead were generic and broad. The FCC ordered that these default discounts were to be used only on an interim basis and only until discounts could be established based on an avoided cost study.[5] In addition, the FCC promulgated rules, published at 47 C. F. R. § 51.607 and 51.609(b), that addressed their definition and identification of "avoided retailing costs."

---

4 See FCC 96-325, the First Report & Order in the Matter of Implementation of the Local Competition Provisions in the Telecommunications Act of 1996, Section VIII. Resale, at para. 908. See also the preferred method set forth at 47 C.F.R. § 51.609(a).

5 The FCC's rules relating to default discounts, which are now vacated, were set forth at 47 C.F.R. § 51.611.

Q. WHAT RELIANCE SHOULD THE COMMISSION PLACE ON THE FCC'S FIRST INTERCONNECTION ORDER AND ITS PRESCRIBED GENERIC AND PROXY GUIDELINES REGARDING AVOIDED COSTS AND RESALE DISCOUNTS?

A. In Iowa Utils. Bd. v. FCC, the Eighth Circuit held that the FCC's rules relating to resale discounts did not comply with the Act and had to be vacated.[6] Thus, the FCC's generic avoided cost guidelines, data and default proxy discounts are no longer in effect and should not be relied upon in this proceeding to determine Qwest's avoided costs or to set the resale discounts for Qwest's retail telecommunications services.

In its decision, the Eighth Circuit stated that the language of 47 U.S.C. § 252(d)(3) is clear. That is, wholesale rates shall exclude costs that actually <u>will be avoided</u> by the local exchange carrier, not costs that are potentially avoidable. The Court stated:

> The plain meaning of the statute is that costs that are actually avoided, not those that could be or might be avoided, should be excluded from the wholesale rates.[7]

The Court explained further that:

> The statute recognizes that the ILEC will itself remain a retailer of telephone service with its own continuing costs of providing that retail service. The

---

6 Iowa Util. Bd. v. FCC, 219 F.3d at 754-57.

7 Iowa Util. Bd. v. FCC, 219 F.3d at 755.

> FCC's rule treats the ILEC as if it were strictly a wholesaler whose sole business is to supply local telephone service in bulk to new purveyors of retail telephone service. Under the statute as it is written, it is only those continuing costs of providing retail service which will be avoided by selling to the competitor the services it requests which are to be excluded. The FCC's rule is contrary to the statute.[8]

Given these directives from the Eighth Circuit, it would be inappropriate to rely on the FCC's vacated definition of avoided costs, assumptions relating to amounts of avoided costs, and default discounts. Instead, the Arizona Commission should rely upon a detailed, Arizona-specific avoided cost study that meets the requirements of § 252(d)(3) of the Act. Qwest's avoided cost study meets these criteria.

Avoided Cost Study Data

Q. CAN APPROPRIATE DISCOUNTS FOR QWEST RETAIL TELECOMMUNICATIONS SERVICES BE DETERMINED WITHOUT EMPLOYING DETAILED COMPANY COST INFORMATION?

A. No. Detailed cost data specific to Qwest's Arizona retail telecommunications services are essential. Without these data, reliable resale discounts for Qwest's Arizona-specific operations cannot be determined. That is why Qwest's embedded resale discount study is based on detailed cost information, not theoretical broad-based FCC industry-wide proxy guidelines or non-Qwest specific costs and

---

8 Iowa Util. Bd. v. FCC, 219 F.3d at 755-56.

assumptions. In this regard, Qwest's avoided cost study stands in contrast not only to the FCC's default discounts but also to the AT&T and MCI studies that were presented in the initial cost docket proceeding that this Commission conducted. The AT&T and MCI studies relied in substantial part on the FCC's now vacated assumptions.

I would also reiterate that the FCC itself recognized the importance of using company and state-specific data:

> A state commission that establishes interim wholesale rates shall, within a reasonable period of time thereafter, establish wholesale rates on the basis of an avoided retail cost study that complies with § 51.609.[9]

Q. PLEASE EXPLAIN YOUR USE OF THE TERM "DETAILED COMPANY COST INFORMATION."

A. In the context of this proceeding, "detailed company cost information" refers to Arizona-specific costs (not 14 state Qwest or industry-wide data) that have been:

- jurisdictionally separated (split interstate/intrastate) under FCC 47 C.F.R. Part 32/36 rules;
- further refined to reflect Arizona Corporation Commission (ACC) jurisdictional accounting (i.e. ACC rather than FCC ordered depreciation rates, etc.); and

9 47 C.F.R. § 51.611 (c) (Emphasis added).

- disaggregated to reflect intrastate product detail as obtained from ledgers, subsidiary records and accounting systems maintained by Qwest.

Q. DOES THE LEVEL OF DATA EMPLOYED IN QWEST'S EMBEDDED AVOIDED COST STUDY PROVIDE FOR THE DEVELOPMENT OF APPROPRIATE RESALE DISCOUNTS?

A. Yes. Qwest's study recognizes that that the retail costs Qwest will avoid can be determined most accurately by using cost data specific to Qwest's operations in Arizona. The Company's embedded study also recognizes that the development of individual product category discounts is important since Qwest's services offered in Arizona vary significantly in the amount and proportion of operating expenses and capital investments that are required. Stated another way, each Qwest basic service category has unique cost characteristics and, therefore, a discount specifically tailored to each category is necessary.

As the Act requires, the Commission should focus on a detailed study that begins with the analysis of Qwest – Arizona operating costs to determine the retailing costs that are inherent in Qwest's retail telecommunication service rates. Using detailed Company records, Qwest's embedded avoided cost study facilitates the calculation of separate discounts for multiple service category groups. These service groups encompass the telecommunications services that Qwest offers for resale. The service category discount methodology recommended by Qwest recognizes the similarities

1 and differences among Qwest's basic services. This methodology also balances the
2 need to recognize service group cost differences, with the administration and
3 processing of multiple discounts, and the purchase alternatives afforded to customers,
4 resellers, and facilities-based competitors.[10]
5
6 For example, basic residential service is capital intensive and has few avoided
7 "retailing" costs. Therefore, this service should receive a lower discount than Basic
8 Business service or Central Office Features, both of which rely more heavily on retail
9 marketing efforts. A service such as Toll, which can be self-provisioned by facilities-
10 based competitive entrants, should have a separate discount so that it does not
11 residually impact or contaminate other resale discounts for basic services that are
12 more likely to be purchased by resellers. Additionally, some services offered by
13 Qwest are sold as "packaged services" (e.g. CustomChoice™[11]). To accommodate
14 the unique characteristics of packaged/special services and to address administrative
15 issues relating to a discount for these services, Qwest's study derives a
16 blended/composite discount for packaged/special services.
17

---

10 Qwest's avoided cost study is also consistent with the ruling by the Arizona federal district court in U S WEST v. Jennings. In remanding the resale discounts this Commission established in the original cost docket, the court focused on the Commission's decision to establish two discounts instead of multiple discounts. The court stated that the Commission "must at least consider the range of cost savings for different categories of services, as well as the potential for abuse through selective ordering tactics, and determine whether additional discount rates are needed." 46 F.Supp.3d at 1015.

11 CustomChoice, a Registered Trademark of Qwest Corporation's parent company.

Reliance On A Multiple Discount Model

Q. WHAT LEVEL OF DISAGGREGATION CURRENTLY EXISTS IN ARIZONA'S EXISITING RESALE DISCOUNTS ESTABLISHED AS A RESULT OF EARLIER PROCEEDINGS AND DECISIONS?

A. Two resale discounts are currently employed in Arizona. In its previous review of wholesale discounts, the Commission established a 12 percent discount for Basic Residence Service and non-recurring charges and an 18 percent discount for most other retail telecommunications services offered by Qwest in Arizona.[12]

Q. DOES THE LANGUAGE OF THE ACT SUPPORT USING A MODEL THAT FURTHER DISAGGREGATES AND CALCULATES MULTIPLE DISCOUNTS?

A. Yes. Unique category discounts are in keeping with the spirit and the express language of the Act. The language of the Act refers to wholesale and retail rates, using the plural, not the singular. Section 252(d)(3) states:

> "[A] State commission shall determine wholesale rates on the basis of retail rates charged to subscribers for the telecommunications service requested, excluding the portion thereof attributable to any marketing, billing, collection, and other costs that will be avoided by the local exchange

---

12 A.C.C. Decision No. 60635 Order (1-98) Arizona Corporation Commission 1996 Consolidated Docket No. U-3021-96-448 et al.

carrier." (Emphasis added).

This statement contemplates that resellers will avail themselves of more than one service and, therefore, a variety of rates/service categories. As a result, retail services and their associated costs must be analyzed. Nothing in the language of the Act suggests that a single, average discount should be created and applied indiscriminately to all of Qwest's retail services or rates. The FCC itself noted in its Order and agreed that:

> "... avoided costs may, in fact, vary among services. Accordingly, we allow a state to approve non-uniform wholesale discount rates, as long as those rates are set on the basis of an avoided cost study that includes a demonstration of the percentage of avoided costs that is attributable to each service or group of services."[13]

The Commission should reject studies that produce only single average discount. These studies are inappropriate, since Qwest's underlying costs and avoided costs vary from service to service, and the unique cost characteristics of each service are not properly accounted for by a single, average discount. In addition, the averaging of discounts to form a only a single discount allows CLECs to engage in a form of improper rate arbitrage, as it gives them the ability to purchase only those services whose individual discounts would actually be lower than the average discount they would receive. If CLECs purchase only those services, and not the services whose individual discounts would actually be higher than the average discount, they will benefit improperly and Qwest will not recover its operating costs.

---

13 See FCC 96-325, the First Report & Order in the Matter of Implementation of the Local Competition Provisions in the Telecommunications Act of 1996, Section VIII. Resale, para. 916.

Q. PLEASE EXPLAIN FURTHER THE ARBITRAGE OPPORTUNITIES THAT ARISE FROM THE USE OF A SINGLE, AVERAGE DISCOUNT INSTEAD OF DISCOUNTS FOR UNIQUE BASIC SERVICE PRODUCT CATEGORIES.

A. As discussed above, the use of a single one-size fits-all average discount inherently creates a subsidy that flows from: (1) services a CLEC does not purchase; or (2) services with actual avoided costs that exceed the average discount; (3) to resale services a CLEC purchases that have lower actual avoided costs. For example, in Qwest's case, this means that Qwest's Basic Residence Service, which has a calculated avoided cost discount of only 4.19%, would instead receive a discount of 10.46% - implying a 150% higher level of avoided costs for Basic Residence Service than actually exists. This additional form of implicit subsidy is contrary to the Act and the FCC's directive to make any subsidies explicit.[14]

Theoretically, this difference could be made up through the resale of services with discounts greater than the average discount percentage. But, in actuality, this will not occur unless resellers purchase all retail services, and in the same proportionate quantities, as Qwest sells in its existing retail business. This is highly unlikely since resellers are not legally bound to buy services in any particular quantities or proportions. In fact, some resellers have indicated their intention or demonstrated their ability to self-provision some services, such as Operator Services/DA or Toll, or

---

14 See 47 U.S.C. § 254 and FCC Docket 97-157, Report And Order CC Docket No. 96-45, para. 17.

that they are or will be focused on targeting high-end business customers, rather than the basic rural residential customers of Qwest.

Facilities-based providers and niche resellers can pick and choose the Qwest services they will resell, combining these services with their own. In this environment, the potential for arbitrage caused by a single, average discount would not be in compliance with the provisions of the Act. Compliance would not occur since the rate reduction resulting from a single, all-encompassing, average resale discount would not correspond with the avoided costs inherent in the retail rates for services offered by Qwest. Given the number and types of resellers, and the options available to each, the single, average, one-size fits-all discount, often supported by resellers, is not appropriate to apply to all Qwest services and its use would not comport with the resale provisions of the Act.

Q. IN ADDITION TO FIVE BASIC SERVICE PRODUCT-CATEGORY DISCOUNTS, DOES THE QWEST EMBEDDED AVOIDED COST STUDY ALSO PRODUCE A COMPOSITE DISCOUNT?

A. Yes. Qwest's embedded study produces five basic service product category discounts as well as a blended or aggregate composite discount. While Qwest supports the development and application of individual category discounts a composite discount may be useful in certain situations where the application of one of the five basic service discounts would be inappropriate.

Additionally, the development of a composite discount in the Qwest Embedded Avoided Cost Study provides for a general reference and comparison to the single average discount typically produced in high level studies developed by resellers and other parties.

Q. IN WHAT SITUATIONS SHOULD THE COMMISSION CONSIDER USING A COMPOSITE DISCOUNT?

A. The Commission should consider using a composite discount for Qwest packaged and non-basic special services. In addition, a composite discount may be useful for determining appropriate discounts for already-discounted, volume/term contract services. I discuss the unique nature of these services and the need for a different avoided cost analysis for these services later in my testimony.

IV. QWEST EMBEDDED AVOIDED COST STUDY

Overview

Q. HAVE YOU PROVIDED DOCUMENTS SUPPORTING THE QWEST EMBEDDED AVOIDED COST STUDY AND THE DISCOUNTS THE STUDY PRODUCES?

A. Yes. Exhibits to my testimony contain documentation describing the Qwest embedded avoided cost study, the resale discount calculations, and the results. Exhibit DMG - 1 provides a narrative description of the study. Proprietary Exhibit DMG - 2 depicts the calculations and results of the study.

Guidelines For Preparing Qwest's Embedded Avoided Cost Study

Q. WHAT BASIC GUIDELINES UNDERLIE THE QWEST EMBEDDED AVOIDED COST STUDY?

A. The study is premised upon two basic guidelines. First, the Act provides two key guiding principles:

- Section 251(c)(4) of the Act requires that incumbent LECs offer for resale at wholesale rates any telecommunications service that the carrier provides at retail to subscribers who are not telecommunications carriers.

- Section 252(d)(3) states that state commissions shall determine wholesale rates on the basis of retail rates charged to subscribers for the telecommunications service requested, excluding the portion thereof attributable to any marketing, billing, collection, and other costs that will be avoided by the local exchange carrier.

  (Emphasis added).

Second, as the Act implies and the FCC correctly recognizes:

- each retail service must meet the statutory definition of a telecommunications service that is provided at retail to subscribers who are not

telecommunications carriers.[15]

Neither the Act nor the FCC prescribes a specific listing of services that are subject to the resale requirement, and neither provides a detailed or absolute methodology for determining avoided costs[16].

Q. IN ADDITION TO THE BASIC PRINCIPLES YOU JUST MENTIONED, WHAT ADDITIONAL GUIDELINES DID QWEST EMPLOY TO DEVELOP ITS EMBEDDED COST STUDY?

A. Qwest adhered to several additional guidelines in developing its embedded cost study. I summarize these guidelines below:

1. ***Employ an approach that reflects the Federal Act and/or any valid FCC directives for identifying avoided Direct and Indirect cost components for services subject to resale.*** Consistent with its filings in other jurisdictions, Qwest's embedded cost study relies on a format that includes:

   (a) Total Intrastate booked revenue and operating expense components;

---

15 See FCC 96-325, the First Report & Order in the Matter of Implementation of the Local Competition Provisions in the Telecommunications Act of 1996, Section VIII. Resale, para. 871 and Footnote 2088 at page 415.

16 Qwest's policy witness in this proceeding, Larry Brotherson, identifies the Qwest retail telecommunications services that are subject to resale discounts under the terms of the Act.

1 (b) "Retail" revenue, expense and capital cost components (exclusive of
2 non-resale services);
3 (c) the split of direct and indirect expenses and capital costs;
4 (d) the avoided cost percentage assumptions for separate *"retail"* service
5 direct and indirect cost elements; and
6 (e) the resulting avoided cost estimates and calculated resale discounts.
7
8 2. ***Employ "Intrastate Product-specific" data.*** The first step in the avoided cost
9 analysis is to identify all the costs to include in the analysis. In this regard, it is
10 important to isolate intrastate operations in order to properly evaluate embedded
11 avoided costs and to calculate cost discounts for specific and disaggregated
12 intrastate resale services.
13
14 Exchange Access Service is not subject to discount under the requirements of
15 Section 251(c)(4) of the Act because it is a wholesale carrier service, not an end-
16 user retail telecommunications service.[17] Therefore, elimination of all Interstate
17 Access revenue and Part 36/69 separated costs (including elimination of all
18 interstate CCL loop costs and the End-User SLC[18]) is essential in identifying the
19 body of costs to include in the analysis. Eliminating these costs from the analysis

---

17 See FCC 96-325, the First Report & Order in the Matter of Implementation of the Local Competition Provisions in the Telecommunications Act of 1996, Section VIII. Resale, para. 873, 874 and 875.

18 See FCC 96-325, the First Report & Order in the Matter of Implementation of the Local Competition Provisions in the Telecommunications Act of 1996, Section VIII. Resale, para. 873, 874 and 984.

also is consistent with the fact that state commissions only have jurisdiction over intrastate, not interstate, costs.[19]

Since the current Qwest - Arizona intrastate rates were originally established based on the jurisdictional intrastate cost assignments resulting from the FCC's Part 36/69 separations procedures,[20] and since the prices we are dealing with are intrastate, the embedded avoided cost study and embedded discount calculations must reflect corresponding intrastate data. In other words, only intrastate costs should be included in the analysis and discount calculation.

3. ***Isolate and exclude "Non-Resale Services" from the analysis of avoided costs and the calculation of discounts.*** As the Act requires, non-resale services must be removed from an avoided cost study so that the avoided costs that are identified and the discounts that a study produces are unaffected by services that Qwest does not provide for resale. For example, Intrastate Access, Intrastate Third Party Billing and Collection, Operator Services/Directory Assistance, and Non-recurring charges are excluded from Qwest's study, since these services are not subject to the discount provisions of the Act or would otherwise contaminate resale discount calculations for resale services. (See Schedule 3.1 of Proprietary Exhibit DMG -

---

19 Section 252(d)(3) of the Act requires that the identified avoided costs be inherent in the rates discounted. Interstate costs are not inherent in intrastate rates.

20 See 47 C.F.R. Part 36 and Part 69.

2)

4. ***Use appropriate Company/State/Product-specific assumptions and embedded cost data necessary to obtain the most meaningful embedded avoided costs and resale discount results.*** Qwest's embedded study employs cost data that are specific to Qwest's Arizona operations and that are taken from Qwest's Cost Accounting Reporting System ("CARS"). These cost data are company-specific, product-specific, and are properly limited to intrastate operations. These data replace the data and the now vacated, generic assumptions of the FCC that were used in determining avoided costs.

The FCC's generic avoided cost assumptions were not specific to Qwest or to Qwest's Arizona operations. To ensure accurate calculation of discounts that will apply to Qwest's Arizona intrastate retail rates, it is necessary to use cost data specific to Qwest's Arizona operations whenever possible. The use of the FCC's Automated Report Management Information System (ARMIS) public information, the FCC's generalized industry-wide 90% avoided cost default proxy factors (applied to entire, unanalyzed account balances), the default "Total 14 State" discount result, and aggregate product information is clearly inappropriate for calculating accurate resale discount percentages.

5. ***Incorporate Qwest's previous experience with its <u>non-resale</u> Access Product in developing avoided costs for resale services.*** Prior to the passage of the Act,

Qwest had never had to resell its retail telecommunications products on a large scale; therefore, there were no meaningful historical data for costs that Qwest would actually avoid. Qwest now has post-Act, historical experience selling its retail services on a wholesale basis, and, where possible, Qwest has relied on that experience and actual historical data to determine its avoided costs (e.g., Customer Operations-Sales expense). Where this type of historical data does not exist, Qwest's study relies on Qwest's experience with selling wholesale access products. This experience provides a reasonable surrogate and foundation for approximating certain avoided costs for intrastate retail services that are subject to resale. Accordingly, Qwest uses its experience with access products in evaluating avoided costs for certain Customer Operations – Marketing (i.e. product management) expenses and in determining Uncollectibles expense for resale services that will be offered in a wholesale-type environment.

Basic Strengths And Attributes Of The Qwest Embedded Avoided Cost Study

Q. WHAT ARE THE BASIC STRENGTHS AND ATTRIBUTES OF THE QWEST AVOIDED COST STUDY?

A. The Qwest embedded study clearly addresses the requirements of the Act. The particular strengths of the study include:

(1) The study is prepared from Qwest's booked financial records. Specifically, the

study is based on 1999 actual Arizona operating results, with data that are consistent with 1999 FCC ARMIS reports where appropriate. The data include detailed sub-account records, product category identifiers, special cost analyses / time studies and the Company's embedded cost accounting system, CAAS/CARS (Cost Accounting Allocation System)/CARS (Cost Accounting Reporting System).

(2) The study utilizes intrastate data, which correspond with the historic intrastate rate setting process and reflect the fact that intrastate retail rates are comprised of intrastate retail costs.

(3) The study removes costs inherent in the FCC's 47 C.F.R. Part 32 Uniform System of Accounts (USOA) account balances that are associated with non-resale / excluded services (e.g. Intrastate Access, Third Party Billing and Collection, Wireless (RCC and Cellular) Interconnect Access, Operator Services/DA, Non-recurring, and E911) in compliance with the language of the Act. Additionally, Operational Support System (OSS) costs are excluded from the study, since they constitute reseller-related wholesale costs that are not avoided.

(4) The study also incorporates the impacts of jurisdictional adjustments for items, such as Arizona-specific depreciation.

(5) The study incorporates all cost elements included in Arizona retail rates, including cost data for Capital Costs (both direct and indirect), net InterArea Rent

Compensation, and Property and Other Taxes.

(6) The study analyzes Qwest costs and account balances in detail to determine with specificity the costs Qwest will avoid instead of relying generic avoided cost assumptions unrelated to Qwest's actual operations.

(7) The study also provides avoided cost discount percentages for multiple service categories, rather than only a single avoided cost discount percentage, which would lend itself to resale arbitrage.

These attributes ensure that Qwest's embedded avoided cost study complies with the Act and addresses the issues the court discussed in U S WEST v. Jennings. Because the study fully complies with the Act and accurately determines Qwest's avoided costs, the Commission should rely on it to establish the avoided cost discounts for Qwest.

Records Employed by Qwest To Develop Resale Discounts

Q. WHY DID QWEST EMPLOY DETAILED ARIZONA-SPECIFIC DATA, RATHER THAN RELY SOLELY ON FCC ARMIS DATA, TO DEVELOP ITS EMBEDDED AVOIDED COST STUDY?

1 **A.** Relying solely on ARMIS data would not permit a state-specific and intrastate
2 product-specific analysis of costs. ARMIS data contain high level,
3 summary information that is designed for FCC reporting requirements and for the
4 general public. ARMIS data contain only aggregated information for the intrastate
5 products offered by Qwest. Therefore, Arizona Intrastate ARMIS data would be too
6 general in nature to properly identify even the revenues associated with resale
7 services, let alone the avoided retailing costs for Qwest's Arizona operations.
8 ARMIS does not provide enough intrastate detail to eliminate non-resale service and
9 cost information, as required by the Act.
10
11 **Q. WHY DOESN'T ARMIS PROVIDE ALL THE NECESSARY INFORMATION**
12 **TO IMPLEMENT THE RESALE DISCOUNT CALCULATION PROVISIONS**
13 **OF THE FEDERAL ACT?**
14
15 **A.** The FCC's ARMIS reports were never designed for the purpose of determining the
16 intrastate wholesale prices that the Act requires. They constitute only one of many
17 data models that summarize information from many data sources regarding telephone
18 company operations.
19
20 The ARMIS reports contain interstate product data for use by the FCC and the
21 general public. However, they do not lend themselves to the more refined intrastate
22 product-specific analysis that is necessary to establish appropriate resale discounts to
23 be applied to specific Arizona intrastate rates; nor can they be used to facilitate the

development of resale discounts that respond to the concerns expressed by the court in U S WEST v. Jennings. The ARMIS 43-03 - Joint Cost Report, provides annual data for each account prescribed under the FCC Part 32 Uniform Systems of Accounts for "Total State" operations prior to FCC Part 36 jurisdictional separation between interstate and intrastate operations. The ARMIS 43-04 - Access Report further delineates the 43-03 Report Subject-to-Separations amounts by splitting revenues, costs and investment between intrastate and interstate operations, as well as the various interstate components (products/rate elements) of Interstate Access and Billing and Collection services. The jurisdictional split reflected in the 43-04 report reflects compliance with FCC Part 36 and Part 69 rules.

However, neither of these reports, or any of the other ARMIS Reports refines Qwest's financial data to reflect specific intrastate products. These reports will not permit isolating intrastate "non-resale" services that must be excluded from resale discount calculations. Although the FCC originally utilized "Total 14 State U S WEST " ARMIS data to prepare its interim, overall default resale discount for application in all Qwest states, as discussed earlier, the FCC also made it clear that this approach was only for the purpose of setting interim default discounts that would be replaced by company-specific discounts determined through a cost study. Thus, it is clear that more specific Qwest - Arizona, product-specific, intrastate data can, and should, be used. Qwest has provided the Commission with this information in this proceeding.

Q. SINCE ARMIS DATA IS TOO GENERAL, WHAT COST DATA SHOULD BE USED TO PERFORM THE EMBEDDED AVOIDED COST STUDIES IN THIS PROCEEDING?

A. The Commission should rely upon Qwest's CAAS (Cost Accounting Allocation System)/CARS (Cost Accounting Reporting System) data. CAAS/CARS is the Company's cost accounting process that produces detailed, product-specific, embedded cost reports. CAAS reports provide product/service financial information on a total state (interstate + intrastate) basis.[21] CARS provides the same product/service financial information on an intrastate, jurisdictionally separated, basis.

There are similarities and important differences between Qwest's CAAS/CARS data and the FCC's ARMIS data. Each report identifies jurisdictional product information, CAAS for total state services, ARMIS for interstate services, and CARS for intrastate services. These reports also share a common data source, the FCC Part 32 booked records of the Company, and many common cost allocation and reporting methodologies, including Part 64 unregulated costing methods. A significant difference, however, is that the FCC's ARMIS reports were never designed or intended to identify and array <u>intrastate</u>, product-specific data. Only the

---

21 An overview of the assignment methodologies used in CAAS, as well as descriptions of the purpose, objectives and cost assignment principles used in the system, are included in Exhibit DMG - 5 of my testimony.

CAAS/CARS data provide this intrastate information for Qwest's operations.

A properly designed embedded avoided cost study requires an input data source containing correct and relevant product and cost information. In developing an embedded avoided cost study for determining Qwest's intrastate retail service discounts, it stands to reason that detailed Qwest *intrastate* product input data sources should be used. Therefore, the use of CAAS/CARS data, rather than the more highly aggregated ARMIS data, is necessary.

Qwest's CAAS/CARS embedded cost data are familiar to state regulators. Qwest has used these data in many Qwest jurisdictions where state commissions have required the company to provide embedded cost support and/or detailed product information on an embedded basis. In addition to use and review by state regulators, the Company's CAAS/CARS data and procedures have been periodically audited by the Company's external auditors (e.g. Coopers and Lybrand and Arthur Andersen).

Embedded Cost Study Avoided Cost Percentages

Q. AFTER IDENTIFYING THE COST DATA UPON WHICH TO BASE THE AVOIDED COST DISCOUNT CALCULATIONS, WHAT IS THE NEXT STEP FOR CALCULATING THE DISCOUNTS?

1 **A.** The next step is to analyze the categories of costs and to determine what percentage
2 of costs in those categories will be avoided when Qwest sells retail
3 telecommunication services on a wholesale basis.
4
5 **Q. PLEASE EXPLAIN YOUR EARLIER STATEMENT IN WHICH YOU**
6 **INDICATED THAT THE AVAILABILITY OF ACTUAL HISTORICAL**
7 **DATA FOR AVOIDED COSTS FOR USE IN DEVELOPING RESALE**
8 **DISCOUNTS IS LIMITED.**
9
10 **A.** Because the need to identify avoided retailing costs did not arise until 1996 when the
11 Act and its resale provisions became law, Qwest had not previously tracked its costs
12 for such a purpose. There was no reason to do so. Since passage of the Act, Qwest
13 has had significant experience selling resale services and, as a result, now has some
14 historical data upon which it can rely to determine avoided retail costs. However, the
15 availability of this information is still somewhat limited because, in some cases, the
16 data are unavailable or are difficult to track with accuracy. Examples of costs for
17 which there are not meaningful historical data relating specifically to intrastate resale
18 services are costs relating to product management and uncollectible accounts. In
19 these areas, Qwest's experience providing wholesale carrier access service provides a
20 reasonable surrogate for determining the costs that Qwest will avoid selling intrastate
21 retail services on a wholesale basis.
22

Q. WHY DO CARRIER COSTS RELATING TO QWEST'S ACCESS SERVICE PROVIDE A REASONABLE SURROGATE FOR PRODUCT MANAGEMENT AND UNCOLLECTIBLE RESALE ACTIVITIES AND COSTS THAT QWEST WILL INCUR TO PROVISION RESALE?

A. As my Exhibit DMG – 3 indicates, product management costs for the resale of retail telecommunications service will be very similar to those incurred for providing wholesale access service. A variety of product management type functions are "wholesale" in nature and would be required (not avoided) even if there were no retail operations, because Qwest's product managers focus on developing and bringing its products to the market place.

For years, U S WEST/Qwest has employed product managers to serve the wholesale access service needs of interexchange carriers. Today, Qwest's Carrier market unit is dedicated to serving the access needs of interexchange carriers in order to provide these customers with wholesale switched and dedicated access products. This market unit incurs wholesale costs that are characterized and recorded as "Marketing - Product Management" costs under Part 32 accounting rules. Actual recorded costs for carrier access demonstrate that there are numerous product management cost functions performed in providing <u>wholesale</u>, not retail, services today.

The comparison of total U S WEST/Qwest retail services product management costs and actual carrier access service product management costs provides a sound basis for

identifying the level of product management costs that Qwest will avoiding providing retail services on a wholesale basis. By comparing the product management costs that Qwest has incurred on a retail, product-specific, basis with the total product management it has incurred in a state for carrier access products, Qwest can determine avoided costs percentages for each product group.

For reseller uncollectibles, the use of carrier uncollectibles as surrogate is a conservative approach. Reseller uncollectibles will be similar, if not higher, than those experienced with carriers due to the number of resellers and the churn rate of resellers and their customer base.

Q. WHAT PERCENTAGES OF RETAILING COSTS DOES QWEST'S STUDY ASSUME THE COMPANY WILL AVOID SELLING SERVICES AT WHOLESALE?

A. Qwest's embedded cost study calculated the avoided cost percentages listed below based on Qwest's retail, intrastate service expenses. These percentages are applicable only to the portion of Qwest's <u>intrastate</u> account balances remaining after identifying and removing non-resale/excluded service costs (e.g. Intrastate Access, E911, Wireless (RCC and Cellular) Interconnect Access, Intrastate Third Party Billing and Collection Services, Operator Services/Directory Assistance, and Non-recurring services).

Expense Category	Costs Avoided
Marketing - Product Management	0 - 64%
Sales	2 - 99%
Advertising	50%
Customer Services -	
Qwest Billing and Collection	82 - 99%
Uncollectibles	88 - 89%

A range is depicted for certain expense types since product categories vary in the amount of retailing costs that are incurred. For example, Qwest's study indicates that Basic Exchange Residence product management costs are 0%[22] avoided versus Qwest Central Office (Vertical) Services product management costs, which are 64%, avoided.

Discussion and Analysis Of Avoided Costs

Q. IN DEVELOPING THESE AVOIDED COST PERCENTAGES, WHAT TYPES OF COSTS WERE CONSIDERED TO BE AVOIDED COSTS IN THE QWEST EMBEDDED AVOIDED COST STUDY?

---

22 Where Qwest's Access product history indicates that wholesale product management would equal or exceed a retail product group's potential avoided retailing costs, avoided cost factors were conservatively set at 0% rather than employing assumptions which would reflect incremental cost increases which may occur due to resale. Including incremental costs would result in lower resale discounts.

A. The Qwest study identifies "direct" retail (expense and capital-related) costs as well as supporting "indirect" retail (expense and capital related) costs. These costs include customer operations costs, end-user uncollectibles expense, and a proportionate share of a variety of indirect costs (i.e. common overhead type costs).

Q. WHAT TYPES OF COSTS ARE CONTAINED IN QWEST'S CUSTOMER OPERATIONS ACCOUNTS?

A. Qwest customer operations costs are recorded in several USOA accounts defined by the FCC's 47 C.F.R. Part 32 accounting rules. Customer operations costs are recorded in two main accounts, Account 6610 –(Marketing) and Account 6620 – (Customer Services), both of which have additional sub-accounts.

Account 6610 has three sub-accounts consisting of specific types of marketing costs:

- Account 6611 - Product Management,
- Account 6612 - Sales, and
- Account 6613 - Advertising.

Account 6620 is comprised of sub-accounts containing three types of customer operations costs:

- Account 6621 - Call Completion,
- Account 6622 - Number Services, and

- Account 6623 - Customer Services.

Q. WHAT INITIAL CONCLUSIONS DID QWEST REACH REGARDING THE LEVEL OF QWEST'S RETAIL "MARKETING" COSTS THAT MAY BE AVOIDED?

A. Of the three marketing cost elements in Account 6610, Qwest will still continue to incur a significant portion of its product management expenses in delivering services to resellers. As a result, only a portion of these expenses will be avoided. Product sales costs comprise a large portion of Qwest's marketing costs. Many, but not all, of Qwest's sales costs will be avoided in facilitating resale. A substantial portion of Qwest's product advertising in the marketplace is largely informative to the general market place and, thus supports wholesale and retail operations. Since wholesale and retail operations both derive a benefit from Qwest's advertising, only a portion of these costs should be considered to be avoided costs.

I hasten to point out that a portion of the Qwest product management, sales, and advertising costs also relate to Qwest's <u>non-resale</u> services (e.g. Intrastate Access, Wireless Interconnect Access, E911, Mobile, and Public Access Lines). Qwest is not providing these services at resale, and, therefore, it will not avoid any of the costs associated with these services. None of the costs relating to non-resale services should be considered avoided if a study is to comply with the Act's mandate to calculate resale discounts based on the retail costs that an ILEC will avoid.

Q. IN REGARD TO THE MARKETING (6610) ACCOUNTS, COULD YOU DESCRIBE IN MORE DETAIL WHY QWEST WILL CONTINUE TO INCUR SIGNIFICANT MARKETING/PRODUCT MANAGEMENT COSTS IN PROVIDING WHOLESALE SERVICE TO RESELLERS?

A. Qwest will still continue to incur product management costs associated with its current non-retail services at the present levels, and, as Qwest's access service experience indicates, Qwest will incur product management expenses in serving resellers.[23] Exhibit DMG - 3 provides a listing of various product management functions that Qwest performs today that correlate with wholesale carrier and/or reseller interface functions. Just as many product management functions are currently performed for wholesale carrier services, they must be performed for resale, and, thus, only a portion of Qwest's product management costs can be considered avoided due to pure retail efforts.

A closer analysis of product management costs indicates that although Qwest's product managers do some work that would apply specifically to retail offerings (e.g. setting up Qwest specific sales promotions, etc.), product managers also perform product development work that supports wholesale/resold services. For example,

---

23 The FCC's Order indicated that new wholesale costs such as these should be netted against avoided costs (See FCC 96-325, the First Report & Order in the Matter of Implementation of the Local Competition Provisions in the Telecommunications Act of 1996, Section VIII. Resale, para. 928).

activities and costs associated with developing and implementing most product methods and procedures and developing rate list filings will apply whether the service is provided at retail or wholesale. These activities and costs involve the development of product and service price levels and structure based on economic analysis and the development of total product and service revenues relating to price changes, cross-elasticity, and price demand reaction. They also involve investigating the market to determine product and service potential, market demand and product and service demand reaction to multiple variables. Other activities include developing basic cost building blocks and factors for products and services and the analyses of the interaction of cost, price and demand on product and service profitability. All of these activities and costs are essential in analyzing the viability of potential new products and business opportunities and in the delivery of wholesale service. Because these functions are essential to the delivery of service, only a portion of Qwest's product management costs can be categorized as retail that will be avoided due to the resale provisions of the Act.

Q. PLEASE DESCRIBE QWEST'S ANALYSIS RELATING TO THE AMOUNT OF SALES COST THAT IT WILL AVOID SELLING RETAIL PRODUCTS AT WHOLESALE.

A. Qwest will avoid a portion of the sales costs recorded in Account 6612 relating to end-user contact, but it will not avoid all sales costs. In the wholesale environment, reduced end-user costs have been replaced by reseller contact costs that Qwest incurs

when it interacts with resellers and CLECs as part of the processes for providing resale and unbundled services. As Qwest loses its existing end-user customers to competing resellers, it also loses the sales costs associated with those customers and it picks up new costs for resellers themselves. As new customers of Qwest, resellers are in effect, replacement customers for the retail end-user customers lost to resellers. Qwest must perform many of the same sales functions it previously performed for its end-users in connection with servicing resellers. For example, Qwest sales employees must negotiate contracts with the resellers and CLECs and respond to their service-related inquiries and requests. Exhibit DMG - 4 provides a more detailed review of sales functions required in a wholesale environment.

Therefore, Qwest's actual experience and recorded costs for dealing with reseller and unbundled-related cost functions need to be recognized when determining the avoided cost percentage for Account 6612 Marketing - Sales. Accordingly, Qwest's study properly identifies sales costs that are not avoided by identifying recorded sales costs that relate to providing resale and unbundled services and the portion of Qwest's retail-related sales costs that are connected with products that are not subject to resale.

Q. PLEASE DESCRIBE HOW QWEST'S EMBEDDED AVOIDED COST STUDY TREATS ADVERTISING COSTS?

A. Qwest evaluated product advertising costs separately from other costs. Most product advertising is informational and it is done in the general market place. As a result,

1 product advertising that Qwest performs for retail services that are offered for resale
2 benefits not only Qwest retail operations, but also its wholesale operations and the
3 CLECs that resell Qwest's services. Qwest's advertising provides for general
4 customer awareness, which is not limited to Qwest retail efforts. Qwest's advertising
5 may even reduce the advertising costs that CLECs and resellers would otherwise
6 incur.[24] An example of this type of advertising cost is Qwest's "*69 - Last Call
7 Return" public advertising campaign. Qwest's customer awareness advertising and
8 Qwest's central office equipment facilitate *69 use by Qwest customer's, as well as
9 customers of a reseller, whenever the customer becomes informed and chooses to use
10 the service. No ordering of service is required; it's automatically available to reseller
11 customers who respond to Qwest's informational advertisement. Revenue collections
12 for Qwest and resellers alike are enhanced whenever end-user customers become
13 informed about, and subsequently use, the *69 advertised service. Since product
14 advertising is aimed at increasing service penetration and is informative for the
15 general marketplace, it should not be considered to be a cost that is totally retail and
16 avoided due to resale. Considering that product advertising impacts Qwest
17 customers, as well as reseller customers and resellers themselves, Qwest's study of
18 advertising costs indicates that these costs would be partially avoided costs.
19 Additionally, certain of Qwest's advertising costs will not be avoided due to resale
20 since they relate to services that are not offered at wholesale.

---

24 Although resellers will be reselling a variety of Qwest retail telecommunications services, they will not be duplicating Qwest advertising of its trademarked services. However, resellers' customer awareness and penetration will be enhanced as a result of Qwest's advertising of such services.

Q. WHAT FINAL CONCLUSIONS DID QWEST REACH WITH REGARD TO ITS MARKETING COSTS?

A. Qwest concluded that the FCC's overly simplistic, generic 90% avoided cost factor assumption for all the Qwest marketing costs summarized in Account 6610 is erroneous. This conclusion is based on the fact that the more specific accounting information from Qwest's actual Arizona operations demonstrates that separate and lower percentages are appropriate. Therefore, the Qwest embedded study develops and employs a separate factor for each resale product group and for each of the three components of total marketing expense - Product Management, Sales, and Advertising.

Once these percentage factors are developed, the cost study applies them to the intrastate retail service portion of the account balances on a product-specific basis. [25] I emphasize that the percentages developed are only applicable to the intrastate "retail service portion" of the account; they would be too high to apply to the entire account balance.

[25] See Qwest Embedded Study Proprietary Exhibit DMG - 2, Schedules 3.6 and 3.6.1.

Q. WHAT INITIAL CONCLUSIONS DID QWEST REACH CONCERNING THE CUSTOMER SERVICE COSTS THAT QWEST MAY AVOID SELLING RETAIL SERVICES ON A WHOLESALE BASIS?

A. Customer Services costs -- Accounts 6621 and 6622 -- include operator service and directory assistance related costs. These costs must either be totally eliminated from the study or included and treated as "not avoided" in order to avoid contaminating recurring retail discount calculations with costs that are not inherent in retail recurring rates. Simply put, and as CLECs and other commissions have recognized, most costs associated with operator service and directory assistance are not part of Qwest's recurring basic service retail rates; therefore, they should not be included in calculating discounts to apply to retail basic service rates. In addition, costs associated with basic operator intercept and customer name and address data base maintenance are functions that will not be avoided in provisioning resale services.

Account 6623 consists of two primary types of expenses: Billing and Collection and Business Office Non-Recurring costs. A proper analysis of the billing and collection portion of the account must recognize that there are costs associated with the following services: Intrastate Access, Wireless Interconnect Access, Public Access Lines (PAL), Billing and Collecting for Third Parties, Independent Company Billing and Collecting, and E911. These services are not subject to resale and/or Qwest will not have any avoided costs associated with them. Accordingly, Qwest's study properly excludes the costs associated with these services from the discount

calculations.

Non-recurring costs recorded in Account 6623 also need special consideration. They constitute sunk cost charges that are separate from recurring service end-user and interconnection / CLEC billing. Furthermore, existing customers do not incur non-recurring charges on a routine or monthly basis; therefore, including them in calculating recurring service discounts is improper and would violate the Act's requirement that only costs included in the retail rates are to be treated as avoided. If existing customers are transferred to resellers, Qwest's non-recurring charge activities for establishing service are an up-front sunk cost that is not avoided due to resale.

Q. WITH REGARD TO THE CUSTOMER SERVICE (ACCOUNT 6620) EXPENSES, YOU INDICATED THAT OPERATOR SERVICE/DA COSTS COMPRISE A PORTION OF THE CUSTOMER OPERATIONS EXPENSES THAT SHOULD BE EXCLUDED FROM THE EMBEDDED AVOIDED COST STUDY. WHY SHOULD THESE COSTS BE HANDLED THIS WAY?

A. OS/DA expenses are not included in the costs for basic local exchange service. Instead, OS/DA services have their own rate lists and/or result in separate charges. Furthermore, some resellers self-provision these services through competing ILECs or other providers. Therefore, the costs for these services should not be considered avoided in developing recurring rate discounts for other services. Instead, they should be eliminated entirely from the recurring rate resale discount analysis.

Otherwise, the discounts for retail services will be contaminated and erroneously inflated, creating a double-dip in revenue loss. If resellers choose to purchase OS/DA services from Qwest, two alternatives are available for resale discount purposes. The Commission could designate that resellers purchase OS/DA from Qwest through Qwest's established carrier wholesale tariff or the Commission could set a separate resale discount from a separate avoided cost analysis as Proprietary Exhibit DMG - 6 depicts.

Q. YOU ALSO INDICATED THAT NON-RECURRING COSTS COMPRISE A PORTION OF CUSTOMER OPERATIONS EXPENSES AND THAT THEY SHOULD BE EXCLUDED FROM THE EMBEDDED AVOIDED COST STUDY. WHY SHOULD THESE COSTS BE EXCLUDED?

A. Customer Service costs relating to non-recurring charge compensation and procedures require special consideration. These costs should be excluded from the calculations of resale discounts. Traditional, embedded, non-recurring charges for the establishment of service are separate and unique from retail telecommunications services that are subject to resale. These costs are, by definition, **non**-recurring in nature; they are not billed to customers on a monthly basis, unlike recurring basic and toll services.

It is critical to understand that the vast majority of Qwest's non-recurring costs constitute sunk costs that Qwest incurs to establish service for its existing end-user

customer base. Qwest will never avoid these costs if customers subsequently transfer to a reseller once service has been established. Since they are costs that will not be avoided and since they are not inherent in Qwest's recurring retail rates, including them as avoided costs in the recurring rate discount calculations would be wrong and would result in inaccurate and inflated discounts. It's important to note that Qwest's existing customer base provides resellers with the vast majority of their potential customers and therefore, inappropriately including non-avoided non-recurring costs in the recurring rate discount calculations would erroneously inflate the recurring rate resale discounts. Additionally, since non-recurring charges have their own rate lists or charges, applying inflated discounts to each regularly billed recurring service, each and every month the service is billed, would significantly overstate the amount of the overall costs that Qwest actually avoids.

Furthermore, Account 6623 also includes the non-recurring order processing costs that Qwest incurs for resale and interconnection. Resale and interconnection functions are a direct result of wholesale operations resulting from the requirements of the Act; therefore, these costs are certainly not avoided retailing costs or costs that should be used in determining avoided cost discounts for retail telecommunications services.

In the post-Telecommunications Act environment, non-recurring compensation and procedures for transferring existing customers to resellers will need to recognize the costs of transferring existing end-users to resellers, the costs created by additional

end-user churn, as well as the costs associated with processing newly established reseller end-user accounts. Customer transfer costs and charges, as well as reseller non-recurring costs and compensation arrangements, will be very different from the traditional end-user non-recurring compensation currently incurred and collected from Qwest end-user customers, today. Therefore, it would be inappropriate to consider traditional, "sunk", non-recurring costs to be avoided costs in Qwest's resale discount calculations. Doing so would contaminate resale discounts created for recurring rate retail services, which have separate rates and costs.

Therefore, like OS/DA service, the Company's non-recurring customer service operational costs and revenues have been excluded from the Qwest embedded avoided cost study in determining recurring rate resale discounts. In both instances, Qwest operations should not be impacted twice, or on an ongoing basis, for charges that have their own rates/fees, and for costs that <u>are not</u> included in the retail rates for routine recurring telecommunications services. Rather, these charges must be treated as separate issues, addressed on a stand-alone basis, and excluded from the discount study in calculating recurring rate discounts.[26]

---

26 Non-recurring business office costs are sunk costs that are not avoided that should be removed from an embedded avoided cost study. However, if they are not removed, separate Qwest analysis would indicate that business office costs (on a per line basis) will not be avoided on a net basis. Any end-user non-recurring costs are offset by incremental reseller costs required for reseller/customer identification, order processing and inquiry. Thus, the avoided cost percentage for any non-recurring costs not excluded from an embedded avoided cost study would be 0%. Exclusion of the costs is the more conservative approach of the two.

Q. DESCRIBE IN MORE DETAIL ANY OTHER COSTS RECORDED IN THE CUSTOMER OPERATIONS ACCOUNT AND EXPLAIN WHY QWEST WILL CONTINUE TO INCUR CERTAIN OF THESE COSTS IN PROVIDING SERVICES TO RESELLERS.

A. Besides OS/DA and non-recurring costs, the Customer Operations cost category contains customer service costs for billing and collection expenses. Billing and collection costs are another area of customer operations where retailing- type costs will be reduced, but certainly not entirely eliminated. Although Qwest does not bill reseller end-user customers, it does bill each reseller for its wholesale service purchases. These reseller billing costs typically are lower than retail end-user billing costs, but they are real costs nonetheless and must be considered and included in the determination of avoided costs. The billing and collection costs that Qwest actually incurs in connection with its wholesale access services demonstrate that these costs cannot be avoided in a wholesale environment. In addition, the billing and collection accounts include unique sub-accounts (6623.3 / .4) for the billing and collection costs billed to Qwest by other exchange carriers (Independent Companies) for designated carrier Independent Company (ICO) Toll. Qwest will not avoid these costs due to resale, and a proper avoided cost study must recognize this fact and handle these costs as not avoided.

Q. WHAT FINAL CONCLUSION DID QWEST REACH REGARDING ITS CUSTOMER SERVICE COSTS?

A. Qwest concluded that it would be clearly inappropriate to apply the FCC's generic 90% avoided cost factor assumption to all of the Qwest customer service costs summarized in Account 6620. Cost data specific to Qwest's Arizona operations was required to establish the proper percentages to apply to portions of the account balances. Qwest's study employs a separate factor for each resale product evaluated and for each of the three non-excluded components of Total Customer Service (i.e. Call Completion, Number Services, and Customer Services). Call Completion and Number Services functions (Mechanized Operator Intercept and Customer DataBase Maintenance) will be performed by Qwest in a resale environment. These Customer Operations "Customer Service Costs" must reflect avoided cost percentages of 0% avoided. The portion of Customer Service costs associated with Qwest Billing and Collection expenses is avoided in a range from 82% to 99% for retail services. These percentage factors are applied on a product-category basis in the embedded cost study.[27] Again, I would emphasize that these percentages are only applicable to intrastate retail service amounts, not the entire account balance.

Q. WHAT IS THE SOURCE OF THE UNCOLLECTIBLE REVENUES AVOIDED COST PERCENTAGE THAT QWEST USES FOR EACH OF THE PRODUCT CATEGORIES?

---

27 See Proprietary Exhibit DMG - 2, Schedule 3.6.1, Line (7).

1 **A.** The avoided cost percentage for uncollectible telecommunications end-user revenues
2 that Qwest uses for each of the product categories is based on Qwest's uncollectibles
3 experience with carriers in the wholesale access market.[28] For retail services, the
4 Qwest study employs avoided cost percentages of approximately 88%. However,
5 uncollectible telecommunication - Independent Company (ICO) Revenues booked to
6 Account 5301.224, associated with designated carrier ICO toll, must be considered
7 0% avoided. ICO uncollectible revenue amounts are determined by the various
8 Independent companies based on their toll traffic and constitute costs billed to Qwest
9 that cannot be avoided due to resale.
10
11 **Q. HOW DID QWEST DETERMINE THAT THERE ARE NO AVOIDED COSTS**
12 **ASSOCIATED WITH ANY OF THE OTHER DIRECT COST AMOUNTS IN**
13 **THE EMBEDDED STUDY, AS DEPICTED IN PROPRIETARY EXHIBIT**
14 **DMG - 2, COLUMN (d) OF SCHEDULES 2 THROUGH 2.5?**
15
16 **A.** Qwest reviewed each account and cost element and determined that:
17 (1) Qwest's current level of direct maintenance and network operations costs
18 recorded in Plant Specific and Non-Plant Specific USOA accounts (Accounts
19 6110 - 6530) will not change regardless whether the service sold is to an end-
20 user or to a wholesaler, since Qwest is responsible for maintaining the network
21 and providing the same level of quality service to all customers, wholesale or

---

28 See Proprietary Exhibit DMG - 2, Schedule 3.3, line (15), which shows the avoided factor development.

retail;[29]

(2) Access expense (Account 6540) billed to Qwest by Independent Companies, and any local reciprocal compensation access charges reflected in the operating results under review, will not change and are not avoided costs in provisioning wholesale or resale;

(3) Depreciation /Amortization (Account 6560) should be considered but should be split between direct and indirect costs to recognize that retail operations include a portion of related indirect investment costs. These indirect costs are considered partially avoided. (See Schedules 3.4 and 3.7 of Proprietary Exhibit DMG - 2); and

(4) Capital Costs (Cost of Money) inherent in retail rates should be properly considered but should be split between direct and indirect costs in order to recognize that direct, network-related capital costs will not change due to resale, and that only the portion of the indirect costs attributable to retailing operations would be avoided. (See Schedule 3.8 of Proprietary Exhibit DMG - 2)

Q. HOW DID QWEST CALCULATE THE PORTION OF COSTS THAT ARE AVOIDED RELATING TO GENERAL SUPPORT AND CORPORATE OPERATIONS EXPENSES IN THE EMBEDDED STUDY?

---

29 See FCC 96-325, the First Report & Order in the Matter of Implementation of the Local Competition Provisions in the Telecommunications Act of 1996, Section VIII. Resale, para. 919. That provision states that Plant Specific and Non-Plant Specific costs are presumed to be not avoided and Qwest's analysis confirms that this is a valid assumption.

1 **A.** The Qwest avoided cost study develops two distinct indirect avoided cost ratios,
2 employing a common formula of *total direct avoided costs* to *total direct costs*. In
3 both ratios, direct costs include the appropriate Part 32 expense accounts in the 6000
4 series of accounts as well as a "direct" capital cost of money component related to
5 network assets. Although the capital component is not recorded in this USOA Part 32
6 account series, network capital costs must not be ignored in the avoided cost discount
7 calculations. These costs constitute actual operating costs inherent in the retail rates
8 that are subject to discount, and they require general/corporate operating cost support
9 expenditures. Capital funding for network-related costs, equipment and capitalized
10 expenses requires a variety of indirect general support costs, including treasury and
11 banking, investor relations, legal, accounting, and human resources, just to name a
12 few. Therefore, capital funding costs must share in the assignment of indirect costs
13 and must be used in developing the direct/indirect avoided cost ratio applied to total
14 indirect costs. Failure to do so would materially overstate the amount of avoided
15 indirect costs caused by resale.
16
17 **Q. WHY DOES QWEST CALCULATE AND USE TWO INDIRECT AVOIDED**
18 **COST RATIOS IN THE AVOIDED COST STUDY?**
19
20 **A.** The study calculates a basic, overall *direct avoided cost* to *total direct cost* factor for
21 application to the majority of indirect costs. However, the basic indirect ratio must be
22 adjusted for applications involving accounts that contain computer-related costs (e.g.
23 General Support – General Support Computers, Depreciation/Amortization – General

Purpose Computers, Information Management Expense, and Capital Costs – General Purpose Computers) in order to properly handle computer-related costs that are not avoided due to resale.

In 1999, Qwest incurred significant network-related computer costs, Y2K costs, and interconnection-related computer costs that are not avoided due to resale. Network computer costs are required to run the network support systems, including the network utilized by resellers. Interconnection computer costs are new wholesale costs stemming from Qwest's need to redesign its computer systems / programs (excluding OSS) to recognize CLEC information and meet other requirements of the Act. Y2K computer-related costs encompass a variety of systems charges that relate to the Company's efforts to develop and ensure system integrity for Y2K compliance. The proper recognition and treatment of network support costs, interconnection-related costs and Y2K computer costs, which are not avoided in the resale of retail telecommunications services, necessitates the development and use of a second indirect avoided cost ratio. This adjusted, indirect ratio is applied only to the computer-related portion of general support expense accounts and capital costs.

Q. DESCRIBE THE TYPES OF COSTS TO WHICH THESE RATIOS WERE APPLIED.

A. The *Direct Avoided Cost/Total Direct Cost* ratios are applied to indirect support costs typically recorded in the FCC Part 32 6700 series of accounts. This series of accounts

includes general and administrative costs, executive, legal, accounting, human resources, etc. However, in addition to these costs, Miscellaneous Rent Compensation Net expense, Property and Other Taxes, Other Operating Expenses, and a general support Capital Cost element were also included and are considered to be partially avoided.

Q. PLEASE EXPLAIN WHY QWEST INCLUDED MISCELLANEOUS RENT COMPENSATION EXPENSES, OTHER OPERATING EXPENSES, PROPERTY AND OTHER TAXES, AND GENERAL SUPPORT CAPITAL COSTS IN ITS AVOIDED COST STUDY.

A. All of these costs are elements inherent in Qwest's Arizona retail rate structure. Therefore, under the parameters of the Act, they must be included in an avoided cost study. They constitute indirect costs; therefore, it is appropriate to apportion them using the *direct avoided cost/total direct cost* ratio.

- Miscellaneous Rent Compensation Net includes Accounts 5240 through Account 5263. InterArea Rent Compensation (Accounts 5240.7/.8) is the net of: 1) rental amounts that other Qwest states pay to Qwest's Arizona operations for use by those states of assets that are part of the Arizona booked operations; and 2) amounts that Qwest's Arizona operations pay to other states for the use of corporate facilities located in each of Qwest's other states. The Net InterArea Rent Compensation (Rent Revenue/Expense) consists of reimbursement/payment

for multi-state joint use support investment depreciation, property taxes, house services expense, rents and support investment capital costs. All of these cross-charged costs increase or reduce costs classified as indirect costs in the avoided cost study. Other Miscellaneous Rent Compensation accounts include amounts derived from the rental, or sub-rental, of telecommunications plant furnished apart from telecommunications operations (e.g. land and building space, outside plant or central office space, space provided in conduits, pole line space for attachments, etc.) This incidental compensation is utilized (that is netted, or offset, against total expenses) in order to recognize that associated costs have separate recovery mechanisms.

- Other Operating Expense (Account 7100) costs reflect certain costs relating to employee benefits that are not recorded in the 6000 series of accounts per FCC Part 32 accounting rules and directives. Although recorded in Account 7100, they are operating costs that are inherent in the rates subject to resale and should be included.
- Indirect General Support Capital Costs are the cost of money/capital return costs that are associated with buildings, furniture, office equipment, computers, and other general support assets.
- Property and Other Taxes are non-income tax amounts for property, gross receipts, and franchise and capital stock taxes. These are operating expenses inherent in resale service rates.

1

2 **Description Of Embedded Avoided Cost Study Documentation**

3

4 **Q. ARE THE QWEST EMBEDDED AVOIDED COST STUDY AND**
5 **DISCOUNT RESULTS PROVIDED AS EXHIBITS TO YOUR**
6 **TESTIMONY?**

7

8 **A.** Yes. As I mentioned earlier, Exhibit DMG - 1 provides a narrative description of
9 the Qwest Embedded Avoided Cost Study. Proprietary Exhibit DMG - 2,
10 Schedules 2 Composite and 2.1 through 2.5, depict the packaged/special service
11 composite and the five basic service product category avoided costs and discount
12 calculations. Proprietary Exhibit DMG - 2, Schedules 3.1 through 3.8, provides
13 further supporting calculations for Schedules 2 through 2.5.

14

15 **Q. PLEASE EXPLAIN MORE FULLY THE EMBEDDED STUDY**
16 **DOCUMENTATION AND THE SCHEDULES THAT ARE ATTACHED TO**
17 **YOUR TESTIMONY.**

18

19 **A.** As previously stated, the data employed in the Qwest Embedded Avoided Cost Study
20 is taken from the Company's 1999 journalized results from operations. The Arizona
21 CAAS/CARS data originate with ledger data reported through ARMIS (the initial
22 data corresponds to the data reflected in the Company's FCC ARMIS 43-03 and 43-
23 04 Reports). However, the CARS reports, which depict intrastate, product-specific

operations, also incorporate state-specific treatment of costs, such as depreciation and employee-related benefit amortization costs. In this study, 1999 ledger amounts reported through ARMIS and jurisdictionally separated intrastate data, as adjusted for differences in state accounting treatment, were used as the starting point. These amounts are shown in Proprietary Exhibit DMG - 2, Schedule 2 – Composite, Column (b) and also in Column (a) of Schedule 3.1.

Q. PLEASE EXPLAIN PROPRIETARY EXHIBIT DMG - 2, SCHEDULES 2 THROUGH 2.5.

A. Proprietary Exhibit DMG - 2, Schedules 2 through 2.5, contain the results of the embedded cost study. These exhibits show the various "Avoided Cost *to* Total Cost" percentage calculations applicable to each product category and the aggregate overall Composite Avoided Cost Percentage ("ACP"), as follows:

2	Packaged Service/Special Service Composite	10.46%
2.1	Business (Category 1)	9.41%
2.2	Toll (Category 2)	23.96%
2.3	Listings, CO Features, & Informational Services (Category 3	41.51%
2.4	Residence (Category 4)	4.19%
2.5	Private Line (Category 5)	6.44%

Q. PLEASE EXPLAIN THE SUPPORTIVE SCHEDULES CONTAINED IN PROPRIETARY EXHIBIT DMG - 2.

A. Proprietary Exhibit DMG - 2 also contains schedules that provide the additional detail necessary to calculate the avoided cost percentages shown above, as follows:

Schedule 3.1: Provides the individual financial statement detail for each of the excluded (non-resale) products. Under the general guidelines of the Act, these services are subtracted from the "Total Intrastate" results to arrive at the "Retail Intrastate" results, which are used in the avoided cost discount percentage calculations.

Schedule 3.2: Provides a "Retail" services revenue summary that excludes non-recurring revenues.

Schedule 3.3: Provides detail of the calculations of embedded avoided uncollectible revenue/expense by product.

Schedule 3.4: Provides data relating to computer-related costs recorded in Accounts 6124, 6724 and 6560 that are not avoided due to resale.

Schedule 3.4.1: Provides detailed information regarding the Operational Support Systems costs recorded in Account 6724 that are not avoided due to resale since they constitute costs incurred in the provision of resale.

Schedule 3.5: Provides detailed information regarding Testing and Power costs.

Schedule 3.6 and 3.6.1: Provides detail of the avoided Customer Operations expense components by product.

Schedule 3.7: Provides the calculation of Depreciation Expense split between direct and indirect costs.

Schedule 3.8: Provides the calculation of Capital Costs on a product-specific, total retail service, split between direct and indirect, cost basis (including return and tax gross-up).

Q. WHY WERE CERTAIN QWEST REVENUES AND COSTS, SHOWN ON PROPRIETARY EXHIBIT DMG - 2, SCHEDULE 3.1, EXCLUDED FROM THE STUDY?

A. As I stated previously, there are a number of services that are not subject to resale. Exhibit DMG-2, Schedule 3.1 identifies the services that are excludable either by the Act's definition (e.g. Intrastate Access, Third Party Billing and Collection, Wireless Interconnect Access (RCC and Cellular), and Mobile) or by virtue of the type of service offered (e.g. E911, wholesale PAL, Operator Services/DA, and Miscellaneous Other). Additionally, and as previously described, non-recurring costs are associated with service order processing and other business office activities have their own unique characteristics and rates and, such costs will continue to be incurred by Qwest

on a resale basis. Thus, they are not avoided costs for existing customers and therefore non-recurring business office costs and revenues for the resale services are excluded in order to avoid contaminating the recurring discount calculations.

Q. HOW WERE THE EMBEDDED RESALE DISCOUNTS CALCULATED?

A. The Qwest embedded resale discounts were calculated for the five basic service product categories, and the packaged / special service - composite, as a percent of "Total Avoided Cost" ***to*** "Total Operating Costs", where avoided costs and total operating costs include both *"Expenses"* and *"Capital Cost"* components. Inclusion of capital costs in developing both the numerator and denominator of the discount formula is key to properly calculating any resale discount and is an absolute requirement for developing product category resale discounts. Capital costs must be properly analyzed and included in determining avoided costs, since they are costs which are very much a part of the total operating costs comprising the retail rates being discounted and since the level of investment related costs varies significantly among services.

V. RESALE DISCOUNT ISSUES REQUIRING "SPECIAL HANDLING"

Reliance On A Multiple Discount Model – Packaged/Special Telecommunications Services

Q. WHAT ARE PACKAGED/SPECIAL SERVICES AND WHY SHOULD A COMPOSITE DISCOUNT BE CALCULATED FOR THESE SERVICES?

A. As the descriptor indicates, "Packaged / Special Services" are non-basic services or merely some combination of retail telecommunications services. For example, Basic Residence Service and Central Office (CO) Features are packaged together in the Company's newly offered "CustomChoice™" product, while Centrex is a non-basic special service made up of Basic Business Service, coupled with CO Features, Intercom functions and other unique characteristics.

A composite discount is useful in discounting packaged / non-basic special services, such as CustomChoice™, ISDN, PBX, Centrex, and Advanced Communication Services (ACS), such as Frame Relay, since the number and type of non-basic and/or services packaged together, have changed or varied, and will continue to do so. Often, packaged services will cross basic service category definitions; therefore, application of a basic service discount may be difficult, as well as inappropriate. In these non-basic or product combination circumstances, the use of a composite discount is recommended in order to ease discount administration and application concerns.

1

2 **Reliance On A Multiple Discount Model - Volume / Term Contract**

3 **Telecommunications Services**

4

5 **Q. WHAT ARE VOLUME/TERM CONTRACT TELECOMMUNICATIONS**

6 **SERVICES?**

7

8 **A.** Volume/Term contracts can involve Individual Case Basis ("ICB") pricing

9 agreements where Qwest has custom designed, bid and secured the provision of

10 telecommunications services via a separate large volume pricing

11 arrangement/contract. Or, they can involve situations where Qwest has already

12 established customer agreements based upon special reduced-tariff pricing in

13 exchange for "extended term" contractual obligations.[30]

14

15 **Q. WHAT CONSIDERATIONS ARE IMPORTANT IN DETERMINING IF A**

16 **RESALE DISCOUNT IS APPLICABLE TO QWEST VOLUME/TERM**

17 **CONTRACT SERVICE PRICING?**

18

---

30 The policy and legal issues concerning whether existing Qwest contracts are assumable or transferable to resellers are not addressed in this testimony. ICB or reduced-tariff/extended term contracts initiated by resellers themselves are not encompassed in this discussion, nor are they at issue, since services procured from Qwest would reflect applicable tariffed rates and resale discounts. Discussion of this topic is provided for the purpose of addressing unique avoided cost and resale discount calculation issues relating to Qwest initiated/existing and already-discounted volume and term service contracts.

A. Qwest initiated/existing volume/term contracts comprise only a small portion of Qwest's telecommunications services, but, like packaged services, they require special consideration in regard to evaluating avoided costs. Contracted services can be single services, but are more often comprised of several services that are offered at a reduced-retail price. Since contract services are often comprised of more than one service, and since they already reflect reduced pricing due to lower retailing costs and guaranteed terms, a separate avoided cost analysis and/or the use of a re-evaluated and/or reduced composite, "packaged/special service" discount may be appropriate.

For Qwest initiated/existing contract services, a separate composite discount analysis is appropriate for volume and reduced-retail extended term pricing, because contract rates already reflect substantially reduced "retail marketing" type costs due to expectations of lower ongoing costs associated with customer sales, advertising, and billing and collection activities for contract customers. Retail cost activities such as these are important avoided cost elements in determining avoided costs used in establishing full-price resale discount rates. Contract services reflect a significant level of sunk costs that are not avoided if an existing customer prematurely terminates its contract/term agreement in order to migrate to a reseller once Qwest has established the customer's service. Therefore, for reduced-retail price services, care must be taken to assure that avoided costs are not double-counted in reduced-retail resale pricing situations.

Q. HOW SHOULD THE COMMISSION DETERMINE THE APPROPRIATENESS OF, AND/OR PROPER DISCOUNT FOR, QWEST INITIATED/EXISTING VOLUME/TERM CONTRACT TELECOMMUNICATION SERVICES?

A. In deciding whether a resale discount on Qwest's volume/term services is even warranted, a separate review of contract law/terms is required. If Qwest's existing contracts are legally subject to resale and further discounting is deemed to be warranted, then the discount determination for contract services must give due consideration to the retailing type costs that are avoided in reduced-retail, versus full-retail, service prices/rates. This requires an assessment of any retailing costs that are avoided for services already priced at a reduced-retail rate. Such analysis may well indicate that no further reduction in already discounted pricing is warranted. Or, at least, it is likely that a full-retail service rate discount would be inappropriate to apply to these services because it would result in a double counting (double discounting) of avoided retail costs. (See Exhibit DMG - 1 – Addendum).

Q. PLEASE EXPLAIN HOW DOUBLE COUNTING OF AVOIDED COSTS WOULD OCCUR WITH REGARD TO CONTRACT SERVICES.

A. Double counting of avoided costs would occur if full-service avoided retail costs were used in discount calculations for Qwest initiated term discounted and/or contract services when the lower rates for these services already account for reduced retail

cost efforts. In keeping with the resale discount provisions of the Act and to avoid double discounting, already discounted services require a separate avoided cost analysis, which properly considers only the costs that are inherent in the discounted service rates.

Additionally, contract service discount consideration must recognize that avoided retailing costs for "existing" Qwest contracts would be minimal, if any. For Qwest-initiated/existing contracts, "retail marketing" costs include sunk costs expended up-front in initiating, designing and facilitating the contract. Because Qwest incurs these costs up front, it will not avoid them if customers terminate their existing contracts prematurely in order to transfer their business to a reseller. Although there are retailing costs that remain inherent in the contract service rate, they constitute sunk costs that are not avoided by Qwest. Accordingly, they should not be used in determining a resale discount to apply to existing contract rates that already reflect reduced-retail pricing.

Resellers would benefit greatly from the up-front retailing efforts of Qwest, since a reseller would not duplicate the costs incurred by Qwest if existing contracts were merely transferred. Only if, and when, new contracts are actually initiated by resellers would Qwest avoid its retailing costs normally incurred up-front to establish service contracts. If and when resellers initiate their own volume/term discount contracts, they should do so from the tariffed rate less the resale discount. Discounting Qwest's existing reduced-retail volume/term contract rates by applying

full-retail avoided cost discount rates would be a misapplication of the full-retail discount rates, and it would not be in compliance with the "rate" and "cost inherent in the rate" language and directives of the Act.

Q. WHAT ANALYSIS AND/OR DOCUMENTATION HAS QWEST PROVIDED AS PART OF ITS EMBEDDED AVOIDED COST STUDY REGARDING VOLUME/TERM CONTRACT SERVICES?

A. Exhibit DMG - 1 - Narrative Description includes an Addendum that specifically focuses on Qwest's already-discounted contract / term services. The exhibit Addendum reflects the results of several sensitivity analyses performed on the Qwest embedded avoided cost study that address "retailing" avoided cost differences associated with already-discounted services. The sensitivity analyses identify several avoided cost issues, demonstrating why application of full-price retail service discounts to already-discounted services would be inappropriate under the "rate" and "costs inherent in the rate" resale provisions of the Act.

Reliance On A Multiple Discount Model – Operator Services/Directory Assistance

Q. WHAT CONSIDERATIONS ARE IMPORTANT IN DETERMINING IF A RESALE DISCOUNT IS APPLICABLE TO QWEST'S OPERATOR SERVICE/DA SERVICE?

1 **A.** Of primary concern is whether resellers will be purchasing Qwest's OS/DA at all.
2 Many CLECs and resellers have demonstrated or indicated that they will self-
3 provision or buy these services through other competing ILEC's or other providers.
4 If Qwest service is not purchased, retailing-related costs associated with the service
5 should not be included and allowed to contaminate the resale discount calculations for
6 Qwest's other services. If Qwest's OS/DA service is to be purchased and Qwest's
7 existing wholesale carrier rates are not employed, then a separate and unique avoided
8 cost analysis and resale discount would be required in order to recognize that when
9 the service is provided, Qwest will not avoid any of its direct costs of providing
10 OS/DA.
11
12 **Q. WHAT ANALYSIS AND/OR DOCUMENTATION HAS QWEST PROVIDED**
13 **AS PART OF ITS EMBEDDED AVOIDED COST STUDY REGARDING**
14 **OPERATOR SERVICE/DA SERVICES?**
15
16 **A.** Proprietary Exhibit DMG - 6 develops an avoided cost resale discount for OS/DA
17 that could be used in lieu of Qwest's existing OS/DA wholesale tariff rate.
18
19 **Reliance On A Multiple Discount Model - Summary**
20
21 **Q. HAS QWEST FILED FOR AND/OR RECEIVED ORDERS TO IMPLEMENT**
22 **MULTIPLE RESALE DISCOUNTS, RATHER THAN A SINGLE**

COMPOSITE DISCOUNT, IN COST DOCKET ORDERS ISSUED IN OTHER STATES?

A. Yes. Multiple resale discounts, rather than a single average discount, have been requested and/or ordered in several states. In fact, only some of the very early arbitration cases developed an interim single average discount and only a very few single discounts are in effect today. In all of its cost docket cases filed to date, Qwest has requested multiple resale discounts. Orders received in other states, such as Colorado, Utah, Nebraska and Iowa, require the use of product category differentiated discounts.

Q. PLEASE SUMMARIZE WHY THE COMMISSION SHOULD SET MULTIPLE DISCOUNTS IN THIS PROCEEDING.

A. As my testimony has indicated, the Commission should set multiple discounts for a variety of reasons that are supported by the Act and by the discussion of this issue in U S WEST v. Jennings. In summary, the Commission should recognize that:

- Qwest has multiple services and rates that resellers will avail themselves of under the provisions of the Act;
- the proportion of retailing costs comprised in various rates vary dramatically among services offered by Qwest;

- resellers make no pledge, and are not bound, to purchase all Qwest retail services in the same "composite" mix currently provided to Qwest customers;
- the Act provides the foundation for unique category discounts, and the FCC acknowledged that multiple discounts may be appropriate;
- a single discount facilitates reseller arbitrage;
- packaged, special, and miscellaneous services should be treated separately from basic services;
- volume / term contracts initiated by Qwest constitute already discounted retail services which have different avoided costs than comparable full-retail services; and
- Operator Service/DA service has separate rates, and many resellers will self-provision, or use alternative providers other than Qwest, in providing this service to its customers.

VI. CONCLUSIONS AND FINAL RECOMMENDATIONS

Q. WHAT FINAL CONCLUSIONS AND RECOMMENDATIONS ARE YOU OFFERING IN CONNECTION WITH QWEST'S AVOIDED COST STUDY?

A. **First,** five product-category basic service resale discounts, rather than a single, average discount should be adopted in this proceeding. Using only a single aggregate discount is inappropriate given the fact that the cost characteristics of all services are

not the same and that reseller purchases will not correspond to the retail mix presently sold by Qwest. Some services are capital intensive (such as Basic Residence Service), while other services are more labor intensive; and some services require more retailing sales and/or product management support in relation to total product costs than do other services. The Commission should adopt the five basic service product categories reflected in the Qwest avoided cost study, since they provide the differentiation required for proper product segmentation. The use of basic service product category discounts also averts the improper reseller arbitrage that becomes available with a single discount when resellers pick and choose which services to resell.

Qwest recommends that the Commission adopt Qwest's Embedded Avoided Cost and Resale Discount Study and the product category discounts listed below:

Category	Service Description	Discount
1	Basic Exchange Business	9.41%
2	Toll	23.96%
3	Listings, CO Features, & Informational Services	41.51%
4	Basic Exchange Residence	4.19%
5	Private Line	6.44%

Second, Qwest proposes that the Commission adopt the use of a composite discount of 10.46% for Packaged / Special Services such as CustomChoice™, ISDN, PBX, Centrex, and Advance Communications Services (ACS), such as Frame Relay.

Third, the Commission should find that if Operator Service/DA services are obtained from Qwest, the existing wholesale tariff should be employed or a separate resale discount of 7.00% should be applied to Operator Service/DA retail rates.

Fourth, the Commission should uphold the terms of Qwest's existing customer contracts with respect to whether contracts can be assumed or transferred. If the Commission determines that Qwest initiated and existing contracts are subject to the Act's resale discount provisions, then the Commission should recognize that full-retail discounting of an already discounted service would result improperly in double discounting. To avoid this result, the Commission should employ a separate avoided cost analysis and establish a separate resale discount for these contracts.

Q. DOES THIS CONCLUDE YOUR TESTIMONY?

A. Yes it does.

BEFORE THE ARIZONA CORPORATION COMMISSION

WILLIAM A. MUNDELL
Chairman
JAMES M. IRVIN
Commissioner
MARC SPITZER
Commissioner

IN THE MATTER OF INVESTIGATION INTO QWEST CORPORATION'S COMPLIANCE WITH CERTAIN WHOLESALE PRICING REQUIREMENTS FOR UNBUNDLED NETWORK ELEMENTS AND RESALE DISCOUNTS	)	DOCKET NO. T-00000A-00-0194 PHASE II

EXHIBITS OF

D. M. (MARTI) GUDE

QWEST CORPORATION

MARCH 15, 2001

D. M. (MARTI) GUDE - HAS TESTIFIED ON THE SUBJECT OF EMBEDDED COST STUDIES IN THE FOLLOWING:

STATE	CASE/ DOCKET NO.	CASE NAME	DATE OF TESTIMONY	DATE OF CROSS
Iowa	RPU-88-9	Rate Design Case	D - 7-29-88 * R - 12-13-88 *	1-11-89
Iowa	RPU-88-6	Iowa General Rate Case Rehearing	R - 6-8-89	6-22-89
Iowa	RPU-91-4	In the Matter of the Petition of the Consumer Advocate Division of the Department of Justice Requesting Reduced Rates for U S WEST Communications, Inc.	D - 9-25-91	Settlement reached prior to Hearing
Iowa	TCU-93-3	In Re: McLeod Telecommunications, Inc. (Resale of Centrex Plus)	D - 8-25-93	9-13-93
Iowa	RPU-93-9	In Re: U S WEST Communications, Inc. (Iowa Earnings Investigation)	D - 11-30-93 SR - 2-21-94	3-23-94
Iowa	RPU-95-11	In Re: U S WEST Communications, Inc. (Rate Rebalancing)	D - 9-22-95 R - 2-20-96	Testimony Withdrawn and Proceeding Terminated
Minnesota	P-421/CI-86-354	NWB Earnings Investigation	R - 9-28-87 *	12-87
Nebraska	C-1874	In the Matter of the Application of U S WEST Communications, Inc. for Authority to Increase its Residential Basic Local Exchange Rates Pursuant to Neb. Rev. Stat. Section 86-803(9).	D - 11-25-98 R (oral) - 12-17-98	12-17-98
North Dakota	10,823	IMTS Deregulation	D - 1-13-88 *	1-20-88
North Dakota	PU-314-99-119	U S WEST Communications, Inc. SB 2420 Residential Price Changes Investigation	D - 5-30-2000	6-7-2000

D. M. (MARTI) GUDE - HAS TESTIFIED ON THE SUBJECT OF EMBEDDED COST STUDIES IN THE FOLLOWING:

STATE	CASE/ DOCKET NO.	CASE NAME	DATE OF TESTIMONY	DATE OF CROSS
Oregon	UX 22	In The Matter of the Petition of U S WEST Communications, Inc., To Exempt From Regulation U S WEST's IntraLATA Toll Service	D - 8-9-99	Petition Withdrawn by USWC
South Dakota	F-3848, 3849, 3850	In the Matter of the Inquiry into Northwestern Bell Telephone Company's Allocation of Revenues, Investment, and Expenses Among All Services Offered	D - 9-1-90 SR - 11-15-90	12-4-90
South Dakota	TC99-098	In the Matter of the Petition of U S WEST Communications, Inc. to Reclassify U S WEST's Directory Assistance Service	D - 9-20-99	Settlement reached prior to Hearing

* Filed as D. M. Conley

D = Direct
R = Rebuttal
SR = Surrebuttal
Sup = Supplemental

INDEX OF EXHIBITS

GUDE Direct Exhibit No.

DMG - 1 Embedded Avoided Cost Study Executive Summary - Narrative Description

DMG - 2 Qwest Embedded Avoided Cost Study - Schedules 2 thru 3.8 ***(Proprietary)***

DMG - 3 Marketing - Product Management Cost Functions

DMG - 4 Marketing - Sales Functions

DMG - 5 CAAS/CARS Methodology

DMG - 6 Operator Services / Directory Assistance Discount Calculation ***(Proprietary)***

QWEST
EMBEDDED AVOIDED COST STUDY
EXECUTIVE SUMMARY

NARRATIVE DESCRIPTION

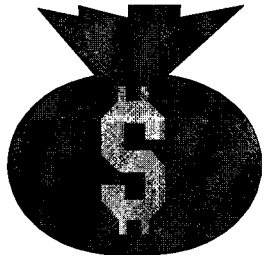

AVOIDED
RESALE COSTS

[BASED ON 1999 U S WEST EMBEDDED COST DATA]

AVOIDED COST RESALE DISCOUNT STUDY
1999

TABLE OF CONTENTS

SECTION	TOPIC	PAGE
I.	PURPOSE, SCOPE, AND APPLICATION	1
II.	DESCRIPTION OF SERVICE GROUPINGS	1
III.	DESCRIPTION OF STUDY	2
	General	2
	Intrastate Operating Costs/Retail Rate Structure	3
	Discount Formula	3
	Data Sources & Data Flow	4
IV.	STUDY ASSUMPTIONS	10
V.	DESCRIPTION OF COSTS - AVOIDED COST TREATMENT	12
VI.	DESCRIPTION OF STUDY SCHEDULES	20
VII.	STUDY RESULTS - SUMMARY	22

I. PURPOSE, SCOPE, AND APPLICATION

The purpose and scope of the Qwest Embedded Avoided Cost Study is to identify avoided retailing costs and determine appropriate resale discounts to be applied to Qwest retail service prices when such services are provided to resellers for resale. This embedded avoided cost study was developed and employed to determine avoided costs, and to calculate resale discounts that comply with Section 251 (c)(4) and Section 252 (d)(3) of the Federal Telecommunications Act of 1996.

Section 251(c)(4) requires local exchange carriers, such as Qwest to:

> ".... offer for resale at wholesale rates any telecommunications service that the carrier provides at retail to subscribers who are not telecommunications carriers."

Section 252 (d)(3) of the Act states:

> "A state Commission shall determine wholesale rates on the basis of retail rates charged to subscribers for the telecommunications service requested, excluding the portion thereof attributable to any marketing, billing, collection and other costs that will be avoided by the local exchange carrier."

The Sections that follow describe the Qwest Embedded Avoided Cost Study and its approach to fulfilling the resale discount requirements of the Act.

II. DESCRIPTION OF SERVICE GROUPINGS

The Act specifically addresses the determination of discount rates based on the retailing costs inherent in those retail rates. Given the language of the Act, the fact that Qwest offers more than one retail telecommunication service, and the fact that resellers are not required to purchase all of Qwest's retail services for resale, the Qwest Embedded Avoided Cost Study prepares discounts based on the identification of avoided costs for five separate basic service product groupings. In addition to the five basic service groupings, a composite discount is developed for "Packaged / Special" service applications. Packaged / Special service applications are those services which are comprised of more than one of the five basic service groupings or that do not share the unique characteristics of a basic service category. The discount percentage developed, for each of the five basic service product groups and for the composite group, is applicable to the services comprising that group.
The discount groupings for intrastate retail services are as follows:

Category

Basic 1 - Basic Exchange Business
Business Basic Exchange

Basic 2 - TOLL
MTS
WATS
800 Service

Basic 3 - Listings, CO Features and Informational Services
Listing Services
Informational Services (976, 960, Versa Net - Regulated, etc.)
Central Office Features

Basic 4 - Basic Exchange Residence
Residence Basic Exchange

Basic 5 - Private Line
Intrastate Private Line

Composite - Packaged / Special Services
"CUSTOMCHOICE™" type services
Centrex Services
Integrated Services Digital Network (ISDN)
Advanced Communications Service (e.g. Frame Relay, LAN, MegaBit services)
PBX – Trunks, DSS, and UAS

III. DESCRIPTION OF STUDY

General

This embedded cost study determines the retailing costs for Qwest retail telecommunications services that are avoided due to resale. It calculates discount percentages to apply to retail rates when retail services are offered on a wholesale basis to resellers. The study is based on an analysis of intrastate costs that are inherent in the intrastate service rates. It identifies intrastate services, which meet the definition of retail telecommunications services subject to resale under the terms of the Act; and it analyzes total operating costs for these services in order to determine the avoided retailing costs addressed by the Act.

Qwest retail service rates are comprised of Total Operating Costs. Total Operating Costs include direct and indirect Operating Expenses and direct and indirect Capital Costs. The study analyzes total intrastate embedded costs in order to determine total avoided retailing costs. The relationship of avoided costs to total costs is used to develop the resale discount rates.

Intrastate Operating Costs / Retail Rate Structure

Intrastate rates are comprised of many Operating Cost components. They include:

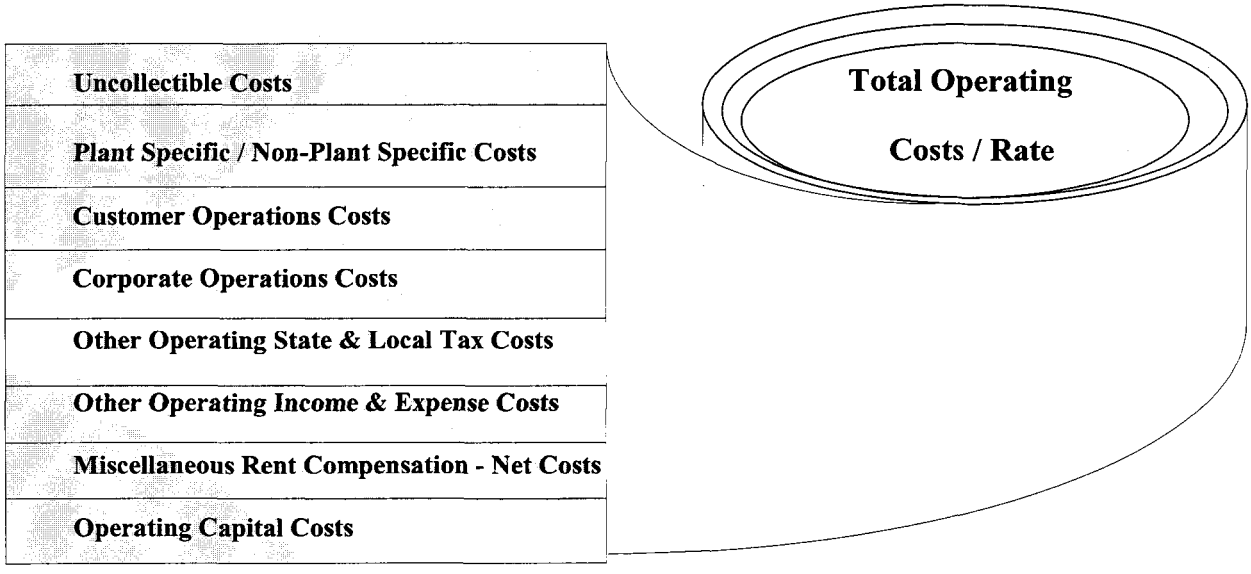

Discount Formula

The Qwest Embedded Avoided Cost Study employs the following discount formula:

Total Operating Costs = Operating Expenses + Operating Capital Costs

Avoided Costs = Marketing, Billing, Collection, and Other Retailing Related Expenses and Capital Costs

Discount Percentage = Avoided Costs / Total Operating Costs

Example:	Total Operating Cost (TC)	= $25.00	
	Avoided Costs (AC)	= $3.00	
	Avoided Cost Percentage (ACP)	= 12%	(AC / TC)

Data Sources & Data Flow

Resale discounts are applicable only to retail telecommunications services. Therefore, this cost study eliminates costs associated with non-retail telecommunications services. Failing to properly eliminate non-retail service costs would contaminate the resale discount calculations for covered retail services with service costs for non-retail services. Removal of non-retail services from an avoided cost study is required in order to be compliant with the resale pricing provisions of the Federal Act.

In order to remove non-retail services, detailed Company cost accounting records are required. Several data sources are used to isolate and identify the intrastate retail and non-retail services and their respective operating cost elements. High level FCC ARMIS (Automated Report Management Information System) data is insufficient for an analysis of intrastate products and services. The FCC ARMIS reports were developed to assess interstate costs and products, not to detail and array intrastate costs and intrastate products and services. Only Company cost accounting records provide the required intrastate service embedded cost data. The detailed Company data sources and the data flow used in the preparation of the Qwest Embedded Avoided Cost Study are as follows:

Data Sources

- U S WEST / Qwest booked results from operations, recorded under FCC CFR 47, Part 32 accounting rules;

- FCC ARMIS Reports
  - ARMIS 43-03 (Summarizes Combined Results from Operations)
  - ARMIS 43-04 (Contains Intrastate Results from Operations);

- State specific accounting records;

- U S WEST / Qwest CAAS/CARS (Cost Accounting Allocation System / Cost Accounting Reporting System) Embedded Cost Product Reports.

Data Flow

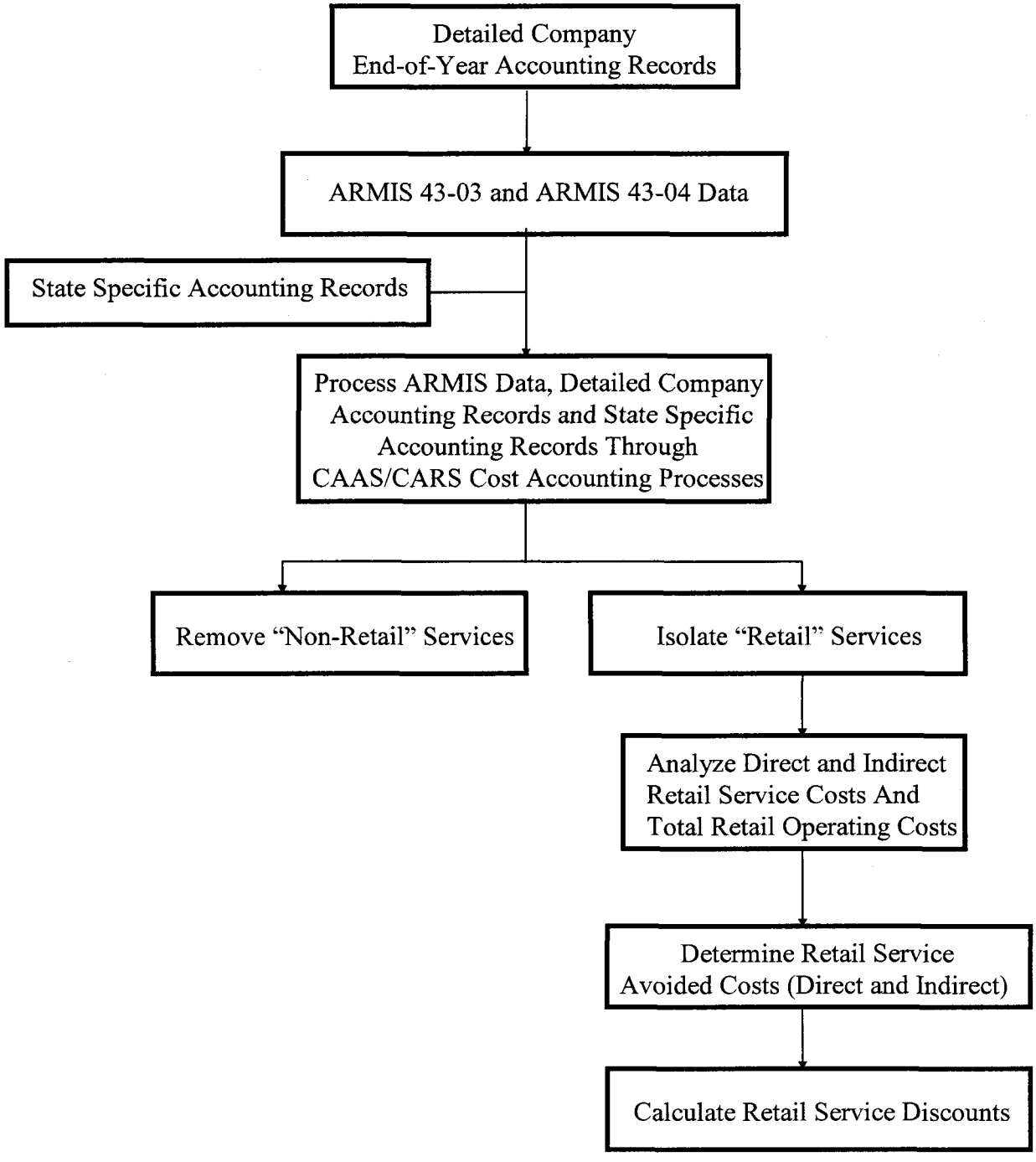
Detailed Company End-of-Year Accounting Records
ARMIS 43-03 and ARMIS 43-04 Data
State Specific Accounting Records
Process ARMIS Data, Detailed Company Accounting Records and State Specific Accounting Records Through CAAS/CARS Cost Accounting Processes
Remove "Non-Retail" Services
Isolate "Retail" Services
Analyze Direct and Indirect Retail Service Costs And Total Retail Operating Costs
Determine Retail Service Avoided Costs (Direct and Indirect)
Calculate Retail Service Discounts

Data Flow Description

Data employed in the Qwest Embedded Avoided Cost Study is taken from the Company's Cost Accounting Allocation System / Cost Accounting Reporting System (CAAS/CARS). CAAS/CARS data originates with the Company's journalized accounting records and it corresponds to ARMIS Report 43-03 and 43-04 data for the State, but at a much greater level of detail for intrastate services. CARS reports, which depict intrastate product-specific operations, also incorporate State specific treatment, rather than the FCC's treatment, of costs such as depreciation and employee related benefit amortization costs. The CARS reports array U S WEST / Qwest intrastate product data, which is not provided in the FCC ARMIS interstate reporting process.

The Qwest Embedded Study begins with detailed USOA Part 32 accounting data. This is the same data that is summarized to higher level when reported via FCC ARMIS reports. Since the data contained in the ARMIS 43-03 (Combined Interstate/Intrastate) and ARMIS 43-04 (Jurisdictionally Separated Interstate/Intrastate) reports has been summarized to a higher level, its use is limited in determining avoided costs, without augmenting the data with the USOA Part 32 detailed accounting data and State-specific accounting records. This more detailed and State-specific data is what is processed by the U S WEST / Qwest CAAS/CARS cost accounting system. Since the Federal Act requires the discounting of intrastate "retail" services, augmentation of consolidated ARMIS 43-04 intrastate data must be made.

U S WEST / Qwest's CAAS/CARS costing system ties to ARMIS reporting, while relying on the detailed journal records, that were originally summarized in the ARMIS reporting process. The use of detailed accounting records facilitates the identification and removal of non-retail services, and a detailed analysis and study of intrastate retail product costs.

Cost Identification

The identification of avoided retailing costs is accomplished by a detailed analysis of U S WEST / Qwest's "retail" services, and the expenses and capital costs inherent in the "Intrastate" rates for these services. Cost analysis is performed by employing detail from U S WEST / Qwest books and records maintained in conformance with the FCC CFR 47, Part 32 Uniform System of Accounts (USOA). The FCC's major classifications of expense and main expense accounts are utilized and augmented with U S WEST / Qwest detail sub-accounts and product cost accounting systems data. Accounting records and product cost records from U S WEST / Qwest's CAAS/CARS system are employed in order to isolate retail services and non-retail

services, as well as identify the retailing costs for retail services that will be avoided in selling services to resellers at wholesale prices.

In order to determine avoided costs, a general understanding of U S WEST / Qwest's wholesale/retail cost relationships was developed. Specific costs and work functions were reviewed in order to gain a more detailed understanding of the costs and to determine more specifically, which cost elements would continue to be incurred by Qwest in a resale (wholesale) environment, and which elements would be associated strictly with Qwest's retailing operations. This understanding and information was augmented with time study, cost analysis, and special studies performed by Qwest's cost studies groups. From this information Qwest was able to develop embedded avoided cost percentages. These percentages were then applied to embedded costs in the Qwest embedded avoided cost study. This type of cost identification and analysis is typical as a part of the U S WEST / Qwest CAAS/CARS cost accounting process.

Non-Retail / Excluded Services

The identification of non-retail services is accomplished by employing product cost data from the Company's CAAS/CARS cost accounting system. Product cost reports identify embedded costs for U S WEST / Qwest's products and services. The following non-retail services were identified and removed from study consideration:

Non-retail Services Excluded:

- All Interstate services - Includes all Part 36 jurisdictionally separated Interstate services; i.e. interstate Access and Subscriber Line Charges (SLC) which are under the FCC's jurisdiction.

The following services are not telecommunications end-user subscriber services under the terms of the Act:

- Intrastate Access service
- Third Party Billing and Collection
- Wireless Interconnect Access
- E911
- Mobile
- Public Access Lines (PAL)

Other Excluded Services:

- Operator Services / DA - These services are not included in the study since Operator Service/DA services have their own rate lists and/or result in separate charges and, as AT&T and other resellers have previously indicated, such services could be provided by competing ILEC's or they could be separately contracted from Qwest. Therefore, the costs for these services should not be considered avoided in developing recurring rate discounts for other services. They must be eliminated entirely from any resale discount analysis or the discounts for retail services are contaminated and erroneously inflated, creating a double-dip in revenue loss.

- Traditional Non-recurring Business Office Services - Traditional, "embedded", non-recurring charges for the establishment of service are separate and unique from retail telecommunications services that are subject to resale. The costs are by definition, **non**-recurring in nature and they are not billed to each and every customer, each and every month, like recurring basic and toll services are. They have their own rates/pricing elements and are charged only when applicable. For the existing customer base, these costs are costs that are expended up-front and Qwest can not avoid them. Since up-front costs are sunk costs and, since customers are not regularly and routinely billed for non-recurring charges, creating contaminated resale discounts for "**recurring**" rate services by including non-recurring cost impacts is inappropriate.

IV. STUDY ASSUMPTIONS

The need for identifying avoided "retailing" costs stems from the resale provisions of the Federal Act and thus, there had been no historical requirement to uniquely identify such costs in the past. No previous FCC Part 32 USOA accounting requirements existed to separately account for all avoided retailing activities. Therefore, actual historical information is limited or not directly available via traditional FCC reporting standards. As a result, the following key assumptions were employed:

- Plant Specific and Non-Plant specific network direct costs of operations are required to provision resale and thus, no direct costs are avoided due to resale.

- Indirect (General Support) costs are arguably not avoided due to resale. However, for purposes of this study a portion of the indirect support costs are conservatively considered to be partially avoided. Two approaches were employed. Some indirect costs were considered to be avoided costs in proportion to the direct costs avoided. This was accomplished by employing a ratio of Avoided Direct Costs to Total Direct Costs, with all direct Expenses and direct Capital Costs considered. Other indirect costs were determined to include partially avoided costs through the use of special studies and analyses (e.g. uncollectibles and information management/computer costs).

- Certain costs, such as wholesale/interconnect systems development and Y2K computer related costs were identified and considered to be costs that should not be treated as avoided retailing costs.

- Incremental costs of resale are to be considered and netted against avoided retail costs.

- The level of Product Management costs currently incurred to provision Qwest's Carrier Access service provides a reasonable surrogate for the Marketing - Product Management costs that are required to provision resale services.

Product Management - Carrier Access Surrogate

Product Management costs for the resale of retail telecommunications service will be very similar to those incurred for providing wholesale Access Service. A variety of product management type functions are "wholesale" in nature and would be required (not avoided) even if there were no retail operations, because Qwest's product managers focus on developing and bringing its products to the market place.

For years, U S WEST / Qwest has employed product managers to serve the wholesale Access service needs of interexchange carriers. Today Qwest's "Carrier" market unit is dedicated to serving the access needs of interexchange carriers in order to provide these customers with "wholesale" switched and dedicated access products. This market unit incurs wholesale costs that are characterized and recorded as "Marketing - Product Management" costs under Part 32 accounting rules. Carrier Access actual recorded costs demonstrate that there are numerous product management cost functions performed in providing wholesale, not retail, services today.

Work function and activity costs recorded for U S WEST / Qwest's Carrier Access wholesale service costs were studied and determined to be representative of wholesale/retail telecommunications products product management functions and cost expectations. A comparison of total U S WEST / Qwest retail services product management costs and Carrier Access service actual product management costs facilitates the identification of product management costs that would be avoided when providing retail services on a resale, "wholesale", basis. Separate comparisons were performed for each basic service category group. By comparing total incurred product management costs, by retail product category, with incurred Carrier Access product management costs in the State, separate avoided cost percentages were established for each product group. For product groups where Carrier Access product management costs equal or exceed retail product category service costs, the percentage avoided was set conservatively at 0% rather than assuming product management cost increases due to resale.

V. DESCRIPTION OF COSTS - AVOIDED COST TREATMENT

The following accounts were analyzed in order to identify "retailing" costs inherent in U S WEST / Qwest's operating costs and retail service rates. In many instances, detailed sub-account information and/or an understanding of detailed cost elements within accounts was required in order to isolate costs which will not be avoided due to resale.

Uncollectibles

Uncollectibles - Account 5300

Under FCC Part 32 USOA accounting rules, this account is used to summarize, for reporting purposes, the contents of Accounts 5301 and 5302. Account 5301 is charged with amounts concurrently credited to Account 1181, Accounts Receivable Allowance - Telecommunications. Account 5302 is charged with amounts credited to Account 1191, Accounts Receivable Allowance- Other.

Qwest maintains additional uncollectible sub-account detail in order to further delineate uncollectible costs. The following sub-accounts are necessary to refine the avoided cost analysis.

Account 5301.2 - Uncollectible - Telecommunications - Intrastate End-User
This account contains intrastate end-user uncollectibles for retail services. Except for sub-account 5301.224, these costs are considered partially avoided.

Account 5301.224 - Uncollectible Exchange Carrier/Ind. Co.
Sub-account 5301.224 further refines Account 5301.2 - End-User Uncollectibles to allow for separate identification of Exchange Carrier / Independent Company originated uncollectibles charged to Qwest. Independent Company uncollectible costs billed to Qwest will not be avoided due to resale.

Account 5301.5 - Intrastate - Carrier Access Service Uncollectible
This sub-account relates to wholesale access services, which are non-resale services. Carrier Access uncollectible costs will not be avoided due to resale. Additionally, Carrier Access uncollectible data is utilized as a surrogate for reseller uncollectibles and the development of the avoided cost uncollectible percentage estimates applied to Account 5301.2, excluding sub-account .224. This is a conservative surrogate, since reseller uncollectibles are anticipated to be at least as great as the uncollectibles experienced with U S WEST / Qwest's wholesale Access Service sales to carriers.

Account 5302 - Uncollectible Other
This account contains other (non-telecommunications customer) uncollectibles not covered by Account 5301. These costs will not be avoided due to resale, since they relate to non-resale type revenues.

Plant Specific / Non-Plant Specific
Accounts 6100 - 6500

Plant Specific / Non-Plant Specific Operations accounts are used to record costs related to specific kinds of telecommunications plant, provisioning, network operations, access and depreciation expense. Except where noted, these costs are considered not avoided due to resale.

Plant Specific Costs

Maintenance - Accounts 6110 - 6410
Maintenance related expenses constitute costs associated with keeping Qwest's network infrastructure, facilities and equipment in sound working order. As such, these costs are not avoidable since resellers will expect the Qwest network to provide resellers with the same level and quality of service afforded to wholesale/retail operations today.

Account 6110 - Network Support
Account 6200 - CO Switching, Transmission, OSP Systems
Account 6310 - Information O/T
Account 6410 - Cable and Wire
All of the above listed accounts contain direct costs of operations, which are not avoided due to resale.

Account 6120 - General Support Maintenance
With the exception of Account 6124, accounts in the 6120 series are considered an "indirect", rather than a "direct", cost of operations. For retail services, a portion of Account 6120 is considered partially avoided in proportion to a ratio of Direct Avoided Costs/Total Direct Costs.

Account 6124 - General Purpose Computers Operations
This account includes work and costs associated with operating general purpose computers, maintaining operating systems, providing direct or indirect supervision, support, administration, training, or office services for all Account 6124 functions. For the general support computer related charges recorded in Account 6124, avoided costs due to resale were determined via a separate study.

Plant - Non-Specific Costs

Other PP&E - Account 6510
This account contains costs related to Property Held For Future Use and Provisioning Expenses not transferred to other plant specific accounts or charged to construction. These costs will be required and will not avoided due to resale.

Network Operations - Accounts 6531 - 6535
These costs include: Account 6531 - Power; Account 6532 - Network Administration; Account 6533 - Testing; Account 6534 - Plant Operations Administration; and Account 6535 - Engineering. These network operations costs will not be avoided due to resale.

Access - Account 6540
This account includes amounts paid to other exchange carriers for the provision of carrier access and local interconnection. These costs will not be avoided due to resale.

Depreciation/Amortization - Account 6560
This account contains expense for the depreciation/amortization of capitalized costs. It contains network and general support asset related costs. Network related costs are required and will not be avoided due to resale. General Support related

depreciation/amortization expense for retail services is considered partially avoided, either in proportion to a ratio of Direct Avoided Costs/Total Direct Costs or, for computer related costs, via the use of a separate study.

Customer Operations Expenses

Marketing - Account 6610

This account contains "retailing" costs specifically referenced in the Federal Act. It is, however, comprised of three sub-accounts, which must be analyzed separately.

Account 6611 - Product Management

This account includes costs incurred in performing administrative activities related to the marketing of products and services. A variety of activities are included, such as: competitive analysis, product and service identification and specification, test market planning, demand forecasting (integration of retail, wholesale, and resale demand), product life cycle analysis, pricing, rate and tariff development, cost study work performed in support of specific regulatory dockets, identifying and analyzing costs for regulatory filings, and numerous others. Some of these functions are retail only, others are required for wholesale / resale operations.

For retail services, only a portion of this sub-account will be avoided due to resale. Product Management in a resale environment will be similar to Product Management costs presently incurred in providing wholesale Access service. Carrier Access product management costs provide a reasonable surrogate for determining the level of costs expected due to resale.

Account 6612 - Sales

Sales costs incurred by the Qwest retail organization are considered to be retail costs and are treated as 100% avoided. Sales costs incurred in the selling of products and services in a wholesale environment are not avoided costs. Wholesale Sales costs include determination of individual reseller/unbundled customer needs, development and presentation of customer proposals, sales order preparation and handing and preparation of sales records.

Only a portion of this account will be avoided due to resale.

Account 6613 - Advertising

This account contains costs incurred in developing and implementing promotional strategies to stimulate the purchase of products and services. It does not include non-

product advertising (i.e. Corporate image advertising, stock, bond or employment advertising).

Qwest's product advertising and stimulation efforts in the market place are informative and cover retail services that can ultimately be resold by resellers. Thus, product advertising is informative not only to Qwest customers, but also to reseller customers and to resellers themselves. Qwest's advertising benefits resellers by limiting their need to duplicate these customer awareness costs. Therefore, such costs should be treated like other wholesale type costs that are not avoided costs.

Arguably, all advertising could be considered to be a cost that is not avoided due to resale, since product advertising is aimed at improved service penetration and it is informative to the general market place. Additionally, in branding their own products, resellers may attempt to advantage themselves by relying on Qwest's network and service reliability and image. However, since product advertising does inform Qwest customers, not just reseller customers or resellers themselves, such costs have been considered to be a partially avoided cost in the Qwest avoided cost study.

Additionally, as U S WEST / Qwest's Access Service product analysis indicates, multiple service provider options have created "slamming" issues. Slamming issues have precipitated increased customer information advertisement costs in the multiple carrier wholesale environment. Similar circumstances are likely to occur due to multiple resale providers. These incremental advertising costs must also be appropriately considered in determining the percentage of advertising costs that are avoided.

Customer Services - Account 6620

Customer Services is comprised of several accounts, which must be individually considered and analyzed in order to determine what proportion of costs will be avoided due to retailing activities.

Account 6621 - Call Services

This account includes costs for helping customers place and complete calls, excluding directory assistance. This includes handling and recording; mechanized intercept; quoting rates; time and charges; and all other activities involved in the manual handling of calls. After isolating and excluding the costs associated with the Operator Services product, costs remaining in this account will not be avoided due to resale.

Account 6622 - Number Services (Directory Assistance)

This account contains costs incurred in providing customer number and classified listings. It includes preparing, compiling and disseminating those listings through directory assistance or other means. After isolating and excluding costs associated

with the Directory Assistance (DA) product, costs remaining in this account will not be avoided due to resale.

Account 6623 - Customer Services Expenses
This account includes costs incurred in establishing and servicing customer accounts. This includes initiating customer service orders and records; maintaining and billing customer accounts; collecting and investigating customer accounts and handling adjustments; and instructing customers in the use of products and services. This account has several sub-accounts that must be individually analyzed.

- **Account 6623.1/.2 - Customer Services (Qwest Billing and Collection)**
  These sub-accounts contain customer service and customer accounting costs associated with billing and collections for Qwest services from Qwest customers. For retail services, costs recorded in these accounts are considered partially avoided due to resale, using a functional time study cost analysis. Resellers must be billed in lieu of end-user customers, so only a portion of these costs will be avoided.

- **Account 6623.123 - Customer Service and Service Orders (Non-recurring Charges)**
  This sub-account, which further defines Account 6623.1, contains costs associated with initiating customer services orders and records which are of a non-recurring nature.

  Traditional non-recurring costs incurred and recorded in this account are excluded from the avoided cost study of recurring avoided costs in order to avoid contaminating recurring rate discounts. If such costs are not removed from the avoided cost analysis of recurring services, the costs in this account must be considered 0% avoided. (However, exclusion is a more conservative and more appropriate approach.) Analysis of non-recurring costs indicates that traditional costs for existing customers are sunk costs that have already been incurred and thus, will not be avoided. Any costs avoided due to reseller initiated new customer orders would be offset by U S WEST / Qwest incremental costs for systems modifications to provide for reseller identification. [1]

---

[1] Non-recurring charges paid by a reseller for a transfer of an existing Qwest customer are covered via a CTC (Customer Transfer Charge). There are no avoided costs when a new customer account is established manually. For any new accounts established by a reseller via electronic interface processing, a separate and unique non-recurring charge may be appropriate, however any avoided cost savings associated with electronic processing would need to be offset with the incremental costs for OSS systems development and any requested manual intervention costs. Contamination of recurring rate discounts with non-recurring charge costs would be inappropriate and would serve only to erroneously inflate recurring rate avoided costs and resale discounts applicable to repeated monthly recurring rate billing.

Account 6623.3/.4 - Customer Services (Independent Company Billing and Collection)
These sub-accounts contain amounts paid to exchange carriers for billing and collection services rendered by them, and charged to U S WEST / Qwest, for intraLATA Toll and interLATA access services. These costs will not be avoided due to resale.

Corporate Operations Costs

Other Executive, Planning, General and Administration. - Account 6700 series

There are two major accounts in this series. Both contain additional sub-accounts, and all contain costs that are indirect and overhead in nature. The two major accounts include Account 6710 - Executive and Planning Expense and Account 6720 - General and Administrative. The costs recorded in these accounts, except for Account 6724, which contains costs associated with Information Management and Computer Programming, are indirect costs. For retail services, these costs are conservatively considered avoided in proportion to the ratio of Direct Avoided Costs/Total Direct Costs.

Account 6724 - Information Management
This account includes work and costs associated with planning, developing, testing, implementing, and maintaining application systems and databases for general-purpose computers that support both regulated and non-regulated operations. It also records costs associated with direct or indirect supervision, support, administration, training, or office services for all Account 6724 functions. These accounts also contain unique costs associated with the Company's Y2K efforts and the development or maintenance of Telecommunications Act / reseller related Operational Support Systems (OSS) and other wholesale/interconnection required development, systems and modification costs. Y2K costs recorded in this account encompass a variety of systems charges that relate to the Company's efforts to develop and ensure system integrity for Y2K compliance. Y2K costs are not avoided costs. Costs incurred for the development of new systems and/or modification of existing systems to properly identify and track wholesale/interconnection requirements are also not avoided. These, in fact, occur because of wholesale activities. OSS developmental activities are required to permit resellers access to Qwest data/systems employed by the Company in its telecommunications services business. As such, OSS wholesale activity costs are afforded the same treatment as non-recurring business office revenues and costs. That is, they are excluded from the avoided cost study and the derivation of recurring

rate resale discounts. A separate study of Account 6724 Computer Programming and Information management costs is employed to determine the proportion of costs that are avoided.

Other State and Local Taxes - Account 7240

This account contains charges for all taxes, other than Federal, State and Local income taxes and payroll related taxes. Included are property, gross receipts, franchise and capital stock taxes. Costs for retail services included in this account are treated as indirect costs and conservatively treated as avoided in proportion to a ratio to the ratio of Direct Avoided Costs/Total Direct Costs.

Other Operating Income and Expense - Account 7100

Other Operating Income and Expense accounts are intended to record the results of transactions, events or circumstances during periods that are incidental or peripheral to the major or central operations of the Company. They include all items of an incidental operating nature where work is performed for others and it is not provided for elsewhere. At the FCC's directive, they also include employee related benefit costs associated with recording Other Post-Employment Benefit Costs (OPEBs). This account is conservatively treated as an indirect cost of operations and avoided in proportion to a ratio to the ratio of Direct Avoided Costs/Total Direct Costs.

Miscellaneous Rent Compensation Net - Accounts 5240 - 5263

Total Miscellaneous Rent Compensation – Net amounts are considered to be indirect in nature and are conservatively treated as avoided costs in proportion to a ratio to the ratio of Direct Avoided Costs/Total Direct Costs. Account 5240.7/.8 reflect miscellaneous net revenue/expense charged from one state to another state for inventories and for costs incident to providing regulated services and investment for the benefit of the other jurisdictions. A net charge or credit results from the compensation received for expenses recorded in a state offset by the rental payments made to another jurisdiction for costs recorded in those jurisdictions. Such costs include investment, depreciation, taxes, house services and cost of capital. Other Miscellaneous Rent Compensation accounts include incidental amounts derived from the rental, or sub-rental, of telecommunications plant furnished apart from telecommunications operations (e.g. land and building space, outside plant or central office space, space provided in conduits, pole line space for attachments, etc.) This incidental compensation is utilized (that is netted, or offset, against total expenses) to recognize that associated costs have separate recovery mechanisms outside of resale.

Capital Costs

Capital Costs include the Company's capital funding, cost of money, related costs which are associated with network and general support related equipment, facilities and capitalized labor costs utilized in the provision of telecommunications services. Capital Costs are split between direct and indirect costs. Network facility related costs are direct costs that will not change for retail services sold to resellers. Some non-plant equipment and facilities are conservatively treated as indirect costs that can be associated with retailing efforts. These indirect costs are considered partially avoided either through the use of the Direct Avoided Cost / Total Direct Cost percentage or, for computer related investments, via a percentage developed from a separate study of computer related costs.

VI. DESCRIPTION OF STUDY SCHEDULES

The Qwest Embedded Avoided Cost Study is produced on an EXCEL file, using several workbooks. The primary data source for the study is a mechanized download of product financial information from U S WEST / Qwest's CAAS/CARS cost accounting process.

Schedules 2 through 2.5 depict USOA financial statement detail for U S WEST / Qwest's total operating expenses and its operating capital costs. These Schedules depict the following operating statement components:

- Total Intrastate and Retail Intrastate Service Revenue;
- Total Intrastate and Retail Intrastate Service Operating Expenses (By USOA Account);
- Total Intrastate and Retail Intrastate Service Operating Capital Costs;
- Retail Service Operating Expenses and Operating Capital Costs, split between direct, direct avoided, indirect and indirect avoided costs;
- Accumulation of Avoided Costs;
- Calculation of the Resale Discount percentage.

These schedules depict the calculations for the five basic product category and the aggregate Packaged / Special services category discounts. Schedules 3.1 through 3.8 provide supporting calculations and additional detail for Schedules 2 through 2.5. The Schedules include:

Schedule 3.1: Provides the individual financial statement detail for each of the Non-retail (non-resale) and excluded products / services or costs. Under the general guidelines of the Federal Act, these services / costs are subtracted from the "Total

Intrastate" results to arrive at the "Retail Intrastate" results that are used in the avoided cost discount percentage calculations.

Schedule 3.2: Provides a detailed "Retail" services revenue summary excluding non-recurring revenues.

Schedule 3.3: Provides detail for the calculation of embedded avoided uncollectible revenue expense percentages by product category, using the Intrastate Access Uncollectible expense level as a surrogate.

Schedule 3.4: Provides the detail for the calculation of embedded avoided costs associated with Account 6124, General Purpose Computer Expense, Account 6724, Information Management Expense, and Account 6560, Deprecation Expense – General Purpose (GP) Computers. Schedule 3.4.1 provides additional detail associated with the isolation and exclusion of wholesale-related Operating Support Systems (OSS) costs.

Schedule 3.5: Provides the detail data employed to identify the CARS Power and Testing Expense split for Accounts 6531 and Account 6533.

Schedule 3.6: Provides the avoided cost percentage detail of each of the components of Customer Operations expense by product. Schedule 3.6.1 provides additional detail underlying the development of the Customer Operations avoided cost percentages. The Access service Product Management surrogate avoided cost percentages are developed and compared to actual product category Product Management costs. Where incurred actual costs exceed the Carrier Access service level of Product Management costs, the avoided percentage is conservatively set at zero rather than show incremental cost increases due to resale.

Schedule 3.7: Provides the calculation of Depreciation Expense split between Direct and Indirect Costs. It also identifies the amount of computer related depreciation, which is treated separately in the Study.

Schedule 3.8: Provides detail data employed to split Capital Costs (Return on Investment and Tax Gross-up) between direct and indirect costs and to identify the amount of computer related costs, which are treated separately in the Study.

Additional documentation containing the CAAS/CARS download data and manual inputs; the studies supporting the avoided cost percentages used for the U S WEST / Qwest Billing and Collections expenses, U S WEST / Qwest Computer related costs, and the CAAS/CARS - ARMIS reconciliation study are also available as

supplemental supporting workpapers.

VII. STUDY RESULTS - SUMMARY

The results of the Qwest Embedded Avoided Cost Study are as follows:

Category	Service Description	Discount
Basic 1	Basic Exchange Business	9.41%
Basic 2	Toll	23.96%
Basic 3	Listings, CO Features, and Informational Services	41.51%
Basic 4	Basic Exchange Residence	4.19%
Basic 5	Private Line	6.44%
Composite	Packaged / Special Services	10.46%

QWEST
EMBEDDED AVOIDED COST STUDY
ADDENDUM

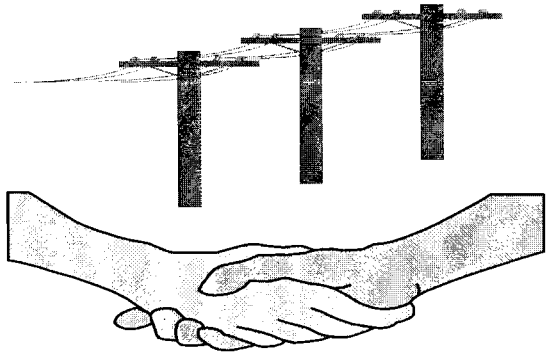

QWEST
VOLUME / TERM CONTRACT SERVICES

VOLUME/TERM CONTRACT SERVICE AVOIDED COSTS

Qwest policy and legal issues regarding whether existing contracts are assumable or transferable to resellers are not addressed herein. This addendum to the Qwest Embedded Avoided Cost Study is provided only for the purposes of addressing unique avoided cost and resale discount calculation issues relating to already-discounted contract services.

Volume/Term contracts can involve Individual Case Basis (ICB) pricing agreements where Qwest has custom designed, bid and secured the provision of telecommunications services via a separate large volume pricing arrangement/contract. Or, they can involve situations where Qwest has already established customer agreements based upon special reduced-tariff pricing in exchange for "extended term" contractual obligations.

Contract services constitute a relatively small portion of Qwest's total telecommunications operations. As such, their inclusion in the large universe of basic service and composite discount calculations has little effect. Although contract services comprise only a small portion of Qwest operations, individually each contract can be fairly substantial. Therefore, a separate avoided cost analysis is warranted in order to avoid distorting any calculations regarding any discount applicable to contract service prices (rates), which already reflect anticipated reductions in retailing costs and price discounts from full-retail rates. Any discount calculations and/or discount for established Qwest contracts should reflect only the total contract costs, and any avoided retailing costs, remaining and inherent in the reduced contract pricing.

If transfers of existing contracts should occur, many costs considered avoided in the "full-retail price" study should not be considered avoided for contract services due to the up-front nature of many contract service expenditures or due to the cost savings already reflected in the discount price. Absent appropriate consideration of such costs and cost savings, resellers will be encouraged to simply rely on Qwest to perform the required up-front work in establishing, designing and pricing contract services. Additionally, the application of a full-price discount would duplicate reduced retail costs already reflected in the discount price. Both of these circumstances are unwarranted under the resale provisions of the Act. The discussion that follows addresses and re-evaluates certain of the "full-price" retail service retailing avoided costs described in the Qwest Embedded Avoided Cost Study narrative, indicating where expected retailing cost reductions lend themselves to unique/reduced packaged service discount consideration. The individual and cumulative effects of the issues discussed are shown below.

Billing & Collection (B&C) Costs

Qwest incurred B&C costs generally consist of customer bill rendering, collections, and billing inquiries. As noted in the "full price" study documentation, Qwest will certainly incur B&C costs in billing resellers rather than end-users. Therefore, if contract services are to be

resold, a separate analysis Qwest billing costs is required, since B&C costs may not be avoided. In instances where B&C cost savings have already been passed on in the contract price itself, the savings should not be duplicated in the discount applied to the contract price. For example, for large volume contract customers, Qwest already sends out only one bill and Qwest receives only one payment from these customers that have multiple lines and services. Additionally, billing inquiries for large volume customers are generally handled by Qwest's Account Executives who charge their expenses to Account 6612 – Sales. Therefore, any retail customer inquiry costs considered as avoided B&C costs in Account 6623 - Customer Services in the "full-service" discount calculation should not be attributed to large volume contract sales. Properly adjusting the "full-price" B&C avoided cost percentage to zero percent avoided for these costs lowers the composite discount calculation for large volume contracts by approximately **350** basis points. For extended term contracts billing consolidation savings are less likely to be found in the reduced-price rates and the business office, rather Account Executives, would handle customer B&C inquiries. Therefore, the adjustment described above for large volume contracts would not be required and the B&C costs considered to be avoided in the "full-price" resale discount composite would continue to be considered avoided costs.

Marketing Costs

Qwest "Marketing" costs consist of Product Management, Sales and Advertising costs. Cost avoidance treatment of Qwest's traditional "full-price retail service" marketing costs already considered in discounted contract pricing should not be duplicated in the avoided cost quantifications relating to any applicable contract service discounts.

- **Product Management Costs**
  Product Management costs are a major component of Qwest's marketing expense. Product Management costs recorded in Account 6611 include costs incurred in performing administrative activities related to the marketing of products and services. A variety of activities are included, such as: product and service identification and specification, pricing, rate and tariff development, cost study work performed in support of specific regulatory dockets, identifying and analyzing costs for regulatory filings, and numerous others. When a customer executes a contract with Qwest these costs are typically expended up-front. If a customer subsequently terminates its account before expiration to take service from a reseller, these costs are not avoided. Once contracts are in place, the ongoing costs for these functions may be reduced or eliminated. Contract price reductions accommodate the anticipated lower cost. Since contract pricing has already accommodated reduced product management costs, there would be very little, or no, additional savings associated with these types of costs to pass on to resellers should resale of U S WEST / Qwest existing contract services occur. Therefore, these cost reductions should not be duplicated in determining contract service discounts. Properly adjusting the "full-price" product management

avoided cost percentage to zero percent-avoided lowers the composite discount calculation by approximately **79** basis points.

- **Sales Costs**
  Sales costs are another component of Marketing expenses. Sales costs include Third Party Sales Commissions, Custom Systems Design, Account Sales / Servicing, and Telemarketing. A review of these costs indicates that a significant portion of such costs is not applicable to contract services. Therefore, they should not be employed in contract discount rate calculations. Furthermore, many contract Sales costs are incurred "up-front" and Qwest would not avoid them if a reseller assumed an existing contract "mid-stream".

  Third Party Sales Commissions comprise approximately 23% of Sales (Account 6612) costs. Third Party Distribution Channel expenses recorded in Account 6612.2 are agent sales commission fees. They are costs that are paid up-front to secure contracts. For resale purposes these costs are considered to be 100% avoided. However, if a customer executes a contract with Qwest and then subsequently terminates its account before expiration to take service from a reseller, these costs are not avoided costs, since under these circumstances, the costs will have already been incurred to secure the contract. Properly adjusting the "full-price" sales avoided cost percentage to zero percent-avoided lowers the composite discount calculation by approximately **89** basis points.

  Custom Design Work comprises about 3% of the Sales costs. These costs are typically incurred when the contracts are initiated, existing customer transfers will not result in these costs being avoided. Costs recorded in Account 6612.3 reflect unique systems design and custom work performed by the Company's Sales and Network representatives on behalf of customers. These costs may be considered to be 100% avoided for resale services, but they are incurred up-front and are not avoided when a customer executes a contract with Qwest and then terminates its account before expiration to take service from a reseller. Properly adjusting the "full-price" sales avoided cost percentage to zero percent-avoided lowers the composite discount calculation by approximately **10** basis points.

  Account Sales and Account Servicing Costs recorded in Account 6612.4 make up the largest portion, approximately 40%, of Sales costs. Qwest's Account Sales efforts to obtain the contract obviously are contract initiation costs that would not be avoided if existing customer contracts were moved to a reseller. If a large volume contract customer executes a contract with Qwest, and then terminates its account before expiration to take service from a reseller, Qwest's "retail" contract initiation sales costs

are expended up-front. As sunk costs, they are not avoided costs. Therefore, Account Sales efforts involved in contract initiation must not be considered in arriving at a discount to be applied to existing customer contracts that move to a reseller. Properly adjusting the "full-price" avoided cost percentage applied to the Account 6612.4 portion of Sales costs, to reflect an Account Sales avoided percentage of zero % avoided, lowers the composite discount applicable to large volume contracts by approximately **153** basis points. The Account Servicing portion of Account 6612.4 costs would continue to be recognized as avoided costs if existing contracts are transferred, since customer initiated inquiry and activity for large volume contracts should be handled by resellers themselves.

For tariffed extended term contracts, the vast majority of the Account Sales and Account Servicing functions are preformed by Qwest prior to, or at the inception of the contract. Therefore these costs are not avoided costs for term contract services. Since these costs were considered to be avoided costs in the "full-price" resale discount, they must be adjusted out of the calculation of the discount applied to term contract services. Properly adjusting for these functions reduces the composite discount applied to term contract services by **306** basis points.

Telemarketing Costs recorded in Account 6612.1 comprise approximately 35% of the Sales account costs. Telemarketing costs include work and costs associated with negotiating product sales with customers, recommending and interpreting communications solutions to a customer's business problems, providing customer support consulting, initiating telephone contacts with customers as part of planned sales campaigns, analyzing the customer's primary business issues and assessing the respondent's sales potential. Such work may be performed by the Company's in-house telemarketing agents or by outside contracted service agents. Although these costs may be appear to be 100% avoided for resale services, these costs are sunk costs. That is, they are incurred up-front when "contract" services are initiated. Thus, these costs are not avoided if a customer executes a contract with Qwest and then terminates its account before expiration to take service from a reseller. Properly adjusting the "full-price" sales avoided cost percentage to zero percent-avoided lowers the composite discount calculation by approximately **137** basis points.

- **Product Advertising**

  Product advertising is typically directed to the individual end-user marketplace, not the "contract" segment of Qwest operations. Therefore, advertising costs

should not be used in reduced-price contract service discount calculations. If extended term contracts are assumed by resellers, any advertising expended to obtain the customer would be an up-front cost that would not be avoided. Properly adjusting the "full-price" advertising avoided cost percentage to zero percent-avoided lowers the composite discount calculation by approximately **73** basis points.

In summary, the Qwest Avoided Cost Study composite discount calculation, adjusted for the above listed avoided cost issues, results in a reduced composite discount of **1.5%** for large volume contracts and **3.5%** for extended term contracts.

Note: Account 6623.123 – Customer Service/Service Order reflects business office costs incurred for setting up a customer's service and account. Account 6623.123 costs are costs that are incurred up-front and thus, they are costs that cannot be avoided for existing contract customers who switch to a reseller once their service has been initiated. If Account 6623 costs are not already properly removed from the composite resale discount calculation, identification and exclusion of Account 6623.123 - Customer Service/Service Order costs, which are not avoided costs in reseller contract-takeover situation, is required in arriving at any resale discount applicable to contract services.

Arizona Corporation Commission
Docket No. T-00000A-00-0194
Qwest Corporation
Direct Testimony of D. M. (Marti) Gude
Exhibit DMG-2
March 15, 2001

REDACTED

MARKETING - PRODUCT MANAGEMENT

DEFINITION: PRODUCT MANAGEMENT - ACCOUNT 6611

Work and costs associated with planning, developing, forecasting and tracking revenues/objectives for new or existing products and services; planning delivery systems; managing financing; presenting customer education/seminar services; managing and implementing information systems in support of Marketing management systems; maintaining relations with outside firms; and providing new or revised tariffs for exchange, interstate, customer premises and intrastate interexchange services.

By definition alone, it is clear that certain of these costs will not be avoided due to resale, since they relate to services not subject to resale discount (i.e. Interstate Services Development (Special Access), Public/Service). The Qwest avoided cost study acknowledges that certain of its Product Management functions will be avoided due to resale. Many of these retail marketing functions will also be performed by resellers themselves. However, many of Qwest's "Marketing - Product Management" functions will continue to be performed and costs will be incurred by Qwest in order to interface with, and provide services to, resellers. As Qwest loses it's "retail end-user customers" and associated "Marketing - Product Management" costs, it will pick up numerous resellers, as "customers", continuing to incur "marketing" costs for similar functions. These costs will be a replacement for the end-user retail costs avoided. These additional functions must be recognized and netted against avoided retail functions when determining the avoided cost % for Account 6611 Marketing -Product Management.

End-User Product Management / Reseller Common Functional Activities and Interfaces

- Negotiating, Preparing, Administrating and Servicing resale contracts
- Identifying and Planning to meet the needs of specific resellers
- Developing and Coordinating special communications requirements for resellers
- Preparing Forecast Integration for Qwest retail and multiple Resellers forecasts
- Interdepartmental Integration of reseller demand requirements
- Managing Product Life cycle integration of Qwest retail and multiple resellers
- Customer / reseller churn analysis

- Resale Discount analysis/revenue analysis
- Identification and establishment of distribution channels
- Analyzing costs and revenues post price change for resale discount adjustment
- Regulatory documentation associated with resale discounts
- Dealing with reseller agent inquiries
- Informing and educating resellers on new products, changes and withdrawals

Although Qwest may avoid performing these functions for end-user customer retailing purposes, these functions will continue, as the above list illustrates, in order to meet the needs and interfaces required for resellers.

Product Management costs currently incurred by Qwest for its wholesale Carrier Access products demonstrate that Product Management costs will also be incurred for interfacing with resellers and provisioning resale services. Absent actual data for reseller cost offsets to end-user avoided costs, the Carrier Access product's Product Management costs are used as a proxy in the Qwest avoided cost study in order to determine the avoided cost % to apply to intrastate retail service costs included in Account 6611.

MARKETING - SALES

DEFINITION: SALES - ACCOUNT 6612

Sales is defined as work and costs associated with selling products and services. This includes determination of individual customer needs, development and presentation of customer proposals, sales order preparation and handling and preparation of sales records.

Certain of these costs will not be avoided due to resale, since they relate to services not subject to resale discount. In addition, costs will be incurred by Qwest in order to interface with and provide services to resellers, as well as to CLEC's purchasing unbundled elements. As Qwest loses "retail end-user customers" and associated "Sales" costs, it will pick up numerous resellers and/or CLECs, as the "replacement customers", continuing to incur "Sales" costs for similar functions. These wholesale related sales costs will be a replacement for the end-user retail costs avoided. Qwest's wholesale-related Sales cost functions must be recognized and netted against end-user avoided retail Sales functions when determining the avoided cost % for Account 6612 Marketing - Sales.

Account 6612 is comprised of several sub-accounts. They include:

Account 6612.1 - Telemarketing
Account 6612.2 - Third Party Distribution Channel
Account 6612.3 - Customer Systems Design
Account 6612.4 - Other Sales and Services

These sub-accounts are employed to record a variety of sales related operational activities/functions. Many of the functions recorded in sub-account 6612.4 are common to wholesale and retail sales efforts. The following listing illustrates functions deemed common to wholesale/retail activities.

End-User SALES / Reseller/CLEC SALES
Common Functional Activities and Interfaces

(In the following functional activities, "Customer" encompasses End-users, Resellers, or CLECs)

- Performing sales contact work for the purpose of selling products and services to selected accounts, market or industry segment. This includes:

- Interfacing with customers
- Investigating customer preferences
- Developing account plans and negotiating contracts with the customer

- Performing servicing and implementation activities for products and services in a particular market or industry segment. This includes:
  - Fielding, investigating and responding to customer inquires and requests
  - Responding to customer demand requests

Although Qwest may avoid performing these functional activities for end-user customer retailing purposes, these functions will instead be performed for resellers or CLECs, and/or perhaps their customers if their customers contact Qwest directly rather than go through their reseller or CLEC. Since sales functions are be required to meet the needs and interfaces required for wholesale, currently identifiable wholesale (resale and unbundled) Sales costs are netted from Total Sales expenses in determining avoided retail Sales costs.

Deleted: October 11, 2000

Formatted

Formatted

Deleted: Montana Public Service Commission¶
Utility Division Docket No. D20000.6.89
Direct Exhibit of D. M. (Marti) Gude
EXHIBIT 5
August 25, 2000¶
Page 1 of ¶
¶

Deleted: SECTION I¶
OVERVIEW¶
PAGE 5 ¶

U S WEST COMMUNICATIONS ACCOUNTING SEGREGATION MANUAL SECTION I – OVERVIEW

I. PURPOSE

The purpose of U S WEST Communications' Accounting Segregation Manual is to detail the segregation of revenues, expenses, taxes and investments associated with the various service offerings of U S WEST Communications.

II. OBJECTIVES OF THE COST MANUAL

This manual contains methodologies that describe the assignment of revenues, expenses, taxes, and investments to the various service offerings and which, if applicable, ensure that no cross subsidization exists between the regulated and deregulated entities of the Company. Definable and measurable assignment methodologies between services reflect the use of cost causation and equitable assignment.

Deleted: c

Internal controls have been established to verify the accuracy of the data utilized. These controls include balancing input and output to Company books, performing variance analysis, and cross checking to assure complete carry forward of all driver table values.

Deleted: c

Existing data sources are utilized to the maximum extent possible in preparation of assignment methodology. This eliminates the expense of duplicating data. The cost versus the benefit of obtaining data that will achieve an acceptable level of accuracy of the output is given high consideration in determining the methodology assignment of the cost pools. When cost pools are consolidated, cost attribution or causation integrity is to be maintained and the result must be insignificant on a total state or product basis.

III. COST ASSIGNMENT PRINCIPLES

A. The manual assigns cost using the following causal or beneficial relationships espoused by the *Cost Accounting Standards Board* (CASB):

1. Direct identification of costs with final cost objectives is required when the beneficial or causal relationship is clear and exclusive and the amount is readily measurable.

Deleted: 1.

2. Where costs cannot be directly identified with cost objectives, they should be grouped into logical and homogeneous expense pools and completely distributed to final cost objectives in accordance with a hierarchy of preferable allocation techniques.

3. Traceability is the preferred basis for attributing costs to final cost objectives. Costs should be assigned to the cost objective that causes the cost to be incurred or, alternatively, to the cost objective that was intended to benefit from the resource expended.

Deleted: co

B. These CASB principles were incorporated into the manual utilizing the following cost assignment principles:

1. Costs are directly assigned to specific products or services whenever practicable.

2. Costs that cannot be directly assigned to specific products or services are allocated using a cost causal methodology in accordance with the following hierarchy:

a. Wherever practicable, the allocation of cost is based on a logical assignment method, such as a direct measurement of usage by that product or service.

b. Other costs are, to the extent practicable, allocated by employing surrogate measures having an observable or logical correlation with some other function or investment.

c. Some costs, such as the President's salary, have no readily identifiable measure of specific causal or beneficial relationship; they are considered general overheads. These expenses are allocated based on the methodology as described in paragraph IV. D. below.

C. The criteria considered in selecting the appropriate assignment method insures that:

1. The information necessary to apply the assignment methodology is consistently definable over time and measurable in objective terms, i.e., units, usage.

2. The assignment drivers are available in the Company's existing accounting structure. If other information is required, the cost versus the benefit of the method of obtaining the information is weighed against other alternatives.

3. The methodologies treat similar revenues and costs consistently throughout the system.

4. The methodologies are reviewed to determine their susceptibility to creating artificial volatility and variability in result, from period to period.

IV. ASSIGNMENT METHODOLOGY OVERVIEW

The methodology for assigning revenues, expenses, taxes and investment is summarized below:

A. Revenues are reported in the Uniform System of Accounts (USOA) 5000 series. These accounts include recurring, nonrecurring, and usage sensitive revenues generated by the various products / services (i.e. residence, business, public, interexchange carrier, toll, private line, and directory). They also include miscellaneous and uncollectible operating revenues.

Revenues are directly assigned to products based on USOA where possible. For revenue USOA accounts that are applicable to more than one product, an analysis of billed revenues by Uniform Service Order Codes (USOC) in the billing system is conducted. Special studies are conducted to assign packaged revenues if the

Deleted: October 11, 2000
Formatted
Formatted
Deleted: Montana Public Service Commission¶
Utility Division Docket No. D20000.6.89
Direct Exhibit of D. M. (Marti) Gude
EXHIBIT 5
August 25, 2000¶
Page 1 of ¶
¶
Deleted: SECTION I¶
OVERVIEW¶
PAGE 5 ¶
Deleted: a.
Formatted: Bullets and Numbering
Deleted: .¶
¶
b.
Deleted: ¶
Deleted: ¶
Deleted: c.
Deleted: co

packaged revenue is applicable to more than one product category. Miscellaneous revenues are assigned to the products based on an appropriate secondary assignment procedure. Uncollectible revenues are assigned to the products based on the related revenues.

B. The USOA Accounting database is used as the primary data source in assigning expenses (Account 6000 series) to products. Expenses are directly assigned to products where practicable; however, where direct assignment to products is not possible, expenses are assigned using a cost causative or equitable assignment methodology. Examples of such methodologies are:

1. Maintenance expenses are assigned to products in one of two ways:

   a. Service order generated maintenance expenses, such as line testing, are assigned to products based on movement or the applicable investment.

   b. Repair and facilities generated expenses are assigned to products on the same basis as the applicable investment.

2. Depreciation expenses are assigned to products on the same basis as the distribution of related investment.

3. Customer Operations and Services are divided into the following categories of expenses:

   a. Service order generation and associated expenses are assigned to products using Time Distribution studies.

   b. Marketing expenses (Product Management, Sales, and Advertising) utilize direct reporting of financial product category identifiers for cost assignment to products.

   c. Operator expenses are directly assigned to Operator Services products based on work units.

   d. Directory Assistance expenses are directly assigned to Directory Assistance.

   e. Revenue Accounting expenses are assigned using studies of end user bills and are finally allocated to the products based on messages or in service quantities.

4. Corporate Operations expenses utilize the Common cost assignment methodology, as described in paragraph IV. D. below.

C. Taxes and Interest Expense (Account 7000 series) are assigned as follows:

1. Income taxes are assigned based on tax causation.

2. Property and Other Taxes are assigned based on Telephone Plant in Service, revenues, or other applicable allocator(s).

Deleted: October 11, 2000

Formatted

Formatted

Deleted: Montana Public Service Commission¶
Utility Division Docket No. D20000.6.89
Direct Exhibit of D. M. (Marti) Gude .
EXHIBIT 5 .
August 25, 2000¶
Page 1 of ¶
¶

Deleted: SECTION I¶
OVERVIEW¶
PAGE 5 ¶

Deleted: co

Deleted: October 11, 2000

Formatted

Formatted

Deleted: Montana Public Service Commission¶
Utility Division Docket No. D20000.6.89
Direct Exhibit of D. M. (Marti) Gude
EXHIBIT 5
August 25, 2000¶
Page 1 of ¶
¶

Deleted: SECTION I¶
OVERVIEW¶
PAGE 5 ¶

3. Interest Expense is assigned based on investment.

D. Some cost pools are not readily assignable to products using a cost causative basis. These expenses are referred to as Common costs and are initially assigned to Common 1 product or Common 2 product. Common 1 is later spread to all products based on all previously assigned expenses. Common 2 is later spread to all products based on total wages and salaries.

E. Gross Investments (Accounts 1220 and 2000 series) are categorized as primary or secondary (support) investment. Primary investments consist of Central Office Equipment and Cable and Wire Facilities (Outside Plant). Secondary investments consist of Land, Building, Vehicles, Furniture and Office Equipment, Station Equipment and Material and Supplies.

1. Central Office investment is first categorized into usage related and subscriber related pools using Jurisdictional Separations data or special studies. The usage related pools are assigned based on various measures of usage. The subscriber related pools are generally assigned to products using a facilities sensitive methodology.

2. Cable and Wire Facilities investment is apportioned using a two-tier process. The first tier, the non-loop portion, is assigned using Jurisdictional Separations data or usage studies. The second tier, loop portion, is assigned using the methodology described in Section III.11. The Private Line portion is identified and assigned using Jurisdictional Separations Part 36 data.

3. Secondary investments are generally assigned using the expense or investment pool that the particular investment supports.

4. Depreciation and Deferred Tax Reserves are assigned secondarily using the investment relationships to products on a sub-account basis for each cost pool.

V. ORGANIZATION OF THE MANUAL

The Accounting Segregation Manual is organized into seven sections, each of which, is described below:

SECTION I

The introductory section includes the purpose and objectives of the cost manual, the cost assignment principles, a synopsis of the assignment methodologies, and a description of how the manual is organized.

SECTION II

This section contains a listing and description of all products and services supported by the manual.

Deleted: ¶

Deleted: co

Deleted: October 11, 2000

Formatted

Formatted

Deleted: Montana Public Service Commission¶
Utility Division Docket No. D20000.6.89
Direct Exhibit of D. M. (Marti) Gude .
EXHIBIT 5 .
August 25, 2000¶
Page 1 of ¶
¶

Deleted: SECTION I¶
OVERVIEW¶
PAGE 5 ¶

Deleted: -------Page Break-------
¶

SECTION III

This section contains detailed methodologies for assigning revenues, expenses, taxes, and investment to products and services. It contains the following subsections:

Section III.1	Secondary Investment
Section III.2	Gross Investment - Plant in Service
Section III.3	Depreciation Reserve
Section III.4	Deferred Taxes and Credits
Section III.5	Revenue Accounts
Section III.6	Plant Operations Expenses
Section III.7	Depreciation Expense
Section III.8	Customer Operations and Services
Section III.9	Corporation Operations
Section III.10	Taxes and Income Accounts
Section III.11	NTS Module
Section III.12	Official Telecommunications

SECTION IV

Special Studies or Assignment Source Methodologies identified in Section III are described in this section.

SECTION V

Reserved for future use.

SECTION VI

The methods and adjustments to U S WEST's basic cost accounting system required to comply with the rules and other applicable state specific standards are contained in this section. In addition to the methods, special studies required to perform the adjustments are described.

Deleted: bed.¶

SECTION VII

This section contains a glossary of terms used in all the previous sections.

Deleted: co

Arizona Corporation Commission
Docket No. T-00000A-00-0194
Qwest Corporation
Direct Testimony of D. M. (Marti) Gude
Exhibit DMG-6
March 15, 2001

REDACTED

Qwest Corporation

Arizona Corporation Commission
Docket No. T-00000A-00-0194

Non-Proprietary
Information

Non-Proprietary
Information

Direct Testimony
Exhibits 1, 3, 4, & 5
D. M. (Marti) Gude
March 15, 2001

Searchable PDF CD of Direct Testimony Exhibits 1, 3, 4, & 5 D.M. (Marti) Gude March 15, 2001. Provided By Company for Ease of viewing

TO REVIEW CD, SEE DOCKET CONTROL

DOCKET
T-00000A-00-0194

BEFORE THE ARIZONA CORPORATION COMMISSION

WILLIAM A. MUNDELL
CHAIRMAN
JIM IRVIN
COMMISSIONER
MARC SPITZER
COMMISSIONER

IN THE MATTER OF INVESTIGATION INTO QWEST CORPORATION'S COMPLIANCE WITH CERTAIN WHOLESALE PRICING REQUIREMENTS FOR UNBUNDLED NETWORK ELEMENTS AND RESALE DISCOUNTS	)	**DOCKET NO. T-00000A-00-0194** **AFFIDAVIT OF D. M. (MARTI) GUDE**
STATE OF NEBRASKA	:	**SS**
COUNTY OF DOUGLAS	)	

D. M. (Marti) Gude, of lawful age being first duly sworn, deposes and states:

1. My name is D. M. (Marti) Gude. I am Director - Cost Accounting in the Policy and Law – Regulatory Operations organization for Qwest Corporation in Omaha, Nebraska.

2. I hereby swear and affirm that my answers contained in the attached testimony to the questions therein propounded are true and correct to the best of my knowledge and belief.

D. M. (Marti) Gude
D. M. (Marti) Gude

SUBSCRIBED AND SWORN to before me this 9TH day of MARCH, 2001.

Mary J. Holmes
Notary Public

GENERAL NOTARY-State of Nebraska
MARY J. HOLMES
My Comm. Exp. Aug. 2, 2004

My Commission Expires:
8-2-2004

Direct Testimony
T-00000A-00-0194

PART 1 OF 2
BAR CODE #0000096339

To review Part 2 please see:

BAR CODE #0000136633