ORIGINAL

SOUTHWESTERN
Power Group II, LLC
An Energy Company - Alliance Builder

0000093220

09-0020
Docket No. E-00000D-~~07-0376~~

January 29, 2009

Arizona Corporation Commission
DOCKETED
JAN 30 2009
DOCKETED BY

RECEIVED
2009 JAN 30 A 9:10
AZ CORP COMMISSION
DOCKET CONTROL

Docket Control
Arizona Corporation Commission
1200 West Washington
Phoenix, Arizona 85007

Subject: Bowie Power Station, L.L.C.
Ten Year Plan for 2009
Decision Nos. 64625, 64626, 69339 and 70588

To Whom It May Concern:

Pursuant to A.R.S. § 40-360.02 (A) and (C), Bowie Power Station, L.L.C. ("Bowie") hereby submits its Ten Year Plan filing for the year 2009 for the transmission line facilities which are the subject of the Certificate of Environmental Compatibility ("CEC") which was granted by the Commission on March 7, 2002 in Decision No. 64626, and subsequently extended through December 31, 2010 by the Arizona Corporation Commission ("Commission") on February 20, 2007 in Decision No. 69339. As used herein, the phrase "transmission line" includes all facilities contained within the definition of that phrase as set forth in A.R.S. § 40-360. The information requirements set forth in A.R.S. § 40-360.02 (C) are found in Appendix "A".

Attached hereto as Appendix "B" and incorporated by reference is a copy of the Ten Year Plan Bowie filed with Commission for 2008.

Bowie was advised by the Arizona State Land Department ("ASLD") that both a portion of the proposed double-circuit 345 kV transmission line and the location of the proposed Willow Substation to be located on Arizona state trust lands, which is the subject of Decision No. 64626, will require minor adjustments to comply with ASLD requirements. In this regard, Bowie received approval of the Commission for an amendment to Decision No. 64626 that adjusted the proposed alignment of Bowie's transmission line and the proposed location of the Willow Substation. This amendment brought the project's transmission line and Willow Substation placement into compliance with the ASLD's requirements. The nature of this amendment is set forth in Decision

3610 North 44th Street · Suite 250 · Phoenix, Arizona 85018
888.332.4599 · Tel 602.808.2004 · Fax 602.808.2099
www.southwesternpower.com

No. 70588, dated November 6, 2008. Appendix "C" is a map depicting the approved 345 kV transmission line alignment and Willow Substation location, as documented in Decision No. 70588.

During the last quarter of 2008, the Bowie "switching diagram" was modified. Appendix "D" is the "switching diagram," as of November 25, 2008, that depicts the proposed Bowie-Willow Interconnection.

On May 13, 2008 a *Generation Interconnection Study* ("Study") report was prepared by PDS Consulting, PLC on the behalf of Tucson Electric Power (TEP). The Study was performed using approved Western Electricity Coordination Council 2010 heavy summer and 2010 light autumn data bases to determine the impact of Bowie on TEP's interconnected transmission system. Studies performed included power flow, transient stability and short circuit analyses. The Study is attached as Appendix "E".

Finally, Bowie continues its active involvement in regional transmission planning organizations, including WestConnect, the Southwest Area Transmission Study group and the latter's subcommittees. Additionally, Bowie remains an Affiliate Member in good standing in the Western Electricity Coordinating Council.

Please direct any questions that may arise from this report to the undersigned at (602) 808-2004.

Sincerely,

Tom C. Wray
Manager, Transmission and Generation Projects

Appendices (5)

Cc: File

Ernest Johnson, Utilities Division, Arizona Corporation Commission
Janice Alward, Esq., Legal Division, Arizona Corporation Commission
Kevin Torrey, Esq., Legal Division, Arizona Corporation Commission
David Getts, SouthWestern Power Group
Lawrence V. Robertson, Jr., Esq., Munger & Chadwick, P.A

Appendix "A"

Bowie Power Station
A.R.S. § 40-360.02 (C) Information Requirements

Appendix A

Information Requirements Pursuant to A.R.S. § 40-360.02 (C)

40-360.02 (C) (1).

The size and proposed route of any transmission lines or location of each plant proposed to be constructed.

The location of the power plant as described in the Application and Record of Docket Number L-00000BB-01-0118 (the "Bowie Docket") remains unchanged.

The transmission interconnection of the power plant at Bowie with the underlying grid remains unchanged from that described in the Bowie Docket: an approximately 15-mile, double-circuit 345 kV transmission line from the point of interconnection on the existing Greenlee-Winchester-Vail 345 kV line, that is owned and operated by Tucson Electric Power Company, which is known as the Willow Substation, and thence to the Bowie Plant Switchyard.

Bowie received approval of the Commission for an amendment to Decision No. 64626 that adjusted the alignment of Bowie's interconnecting double-circuit 345 kV transmission line. This amendment brought the project's transmission line placement into compliance with the Arizona State Land Department's requirements. The nature of this amendment is set forth in Decision No. 70588, dated November 6, 2008. Attached as Appendix C is a map depicting the approved 345 kV transmission line alignment documented in Decision No. 70588.

40-360.02 (C) (2).

The purpose to be served by each proposed transmission line or plant.

The purpose to be served by the proposed transmission line and the power plant remains unchanged from that described in the Bowie Docket.

40-360.02 (C) (3).

The estimated date by which each transmission line or plant will be in operation.

All permits necessary to begin construction of Bowie have been obtained. The project has commenced construction activities.

Current planning anticipates operation of Bowie as follows:

a. Initial energization of all 345 kV interconnection facilities by December 31, 2009; and,

b. Commercial operation of the initial 500 MW (nominal) power block by June 1, 2010.

40-360.02 (C) (4).

The average and maximum power output measured in megawatts of each plant to be installed.

The average and maximum power output measured in megawatts of the Bowie Power Station that was described in the Bowie Docket remains unchanged.

40-360.02 (C) (5).

The expected capacity factor for each proposed plant.

The expected capacity factor for Bowie Power Station that was described in the Bowie Docket remains unchanged.

40-360.02 (C) (6).

The type of fuel to be used for each proposed plant.

The type of fuel to be used for the Bowie Power Station that was described in the Bowie Docket remains unchanged.

40-360.02 (C) (7).

The plans for any new facilities shall include a power flow and stability analysis report showing the effect on the current Arizona electric transmission system. Transmission owners shall provide the technical reports, analysis or basis for projects that are included for serving customer load growth in their service territories.

On May 13, 2008 a *Generation Interconnection Study* (Study) report was prepared by PDS Consulting, PLC on the behalf of Tucson Electric Power (TEP). The Study was performed using approved Western Electricity Coordination Council 2010 heavy summer and 2010 light autumn data bases to determine the impact of Bowie on TEP and the interconnected transmission system. Studies performed included power flow, transient stability and short circuit analyses. The Study can be found as Appendix E.

Appendix "B"

Bowie Power Station
Ten Year Plan for 2008

SOUTHWESTERN
Power Group II, LLC
Energy Development Alliance Builder

RECEIVED

2008 JAN 30 A 11: 23

E-00000D-07 0376

January 30, 2008

DOCKET CONTROL

Docket Control
Arizona Corporation Commission
1200 West Washington
Phoenix, Arizona 85007

Subject: Bowie Power Station, L.L.C.
Ten Year Plan for 2008
Docket No. ~~L-00000BB-01-0118~~
Decision Nos. 64625, 64626 and 69339

To Whom It May Concern:

Pursuant to A.R.S. § 40-360.02 (A) and (C), Bowie Power Station, L.L.C. ("Bowie") hereby submits its Ten Year Plan for 2008 (Appendix "A") for the transmission line facilities which are the subject of the Certificate of Environmental Compatibility ("CEC") which was granted by the Commission on March 7, 2002 in Decision No. 64626, and subsequently extended by the Commission on February 20, 2007 in Decision No. 69339. As used herein, the phrase "transmission line" includes all facilities contained within the definition of that phrase as set forth in A.R.S. § 40-360.

Attached hereto as Appendix "B" and incorporated by reference is a copy of the Ten Year Plan Bowie filed with the Commission for 2007. The only change in the information contained in the 2007 Ten Year Plan relating to the transmission line, which has occurred during the intervening time period, pertains to the proposed route.

Bowie has been advised by the Arizona State Land Department ("ASLD") that both a portion of the proposed transmission alignment and the location of the proposed Willow Substation to be located on Arizona state trust lands, which is the subject of Decision No. 64626, will require minor adjustments to comply with ASLD requirements. In this regard, Bowie has consulted with the Commission's Staff regarding the possibility of a future amendment to Decision No. 64626 that would reflect these route and site adjustments to those originally approved by the Commission. In such event, it is Bowie's belief that the amendment would not result in a substantial change to the original sitings approved in Decision No. 64626.

Upon receipt from ASLD of acceptance of the adjustments for the transmission line and placement of the Willow Substation, Bowie will file necessary documents with the Commission reflecting these alterations to the original sitings approved as part of

3610 North 44th Street · Suite 250 · Phoenix, Arizona 85018
888.332.4599 · Tel 602.808.2004 · Fax 602.808.2099
www.southwesternpower.com

Decision No. 64626. Based on our discussions with ASLD, Bowie does not believe these changes will be substantial, and intends to request an appropriate modification to decision No. 64626 under the provisions of A.R.S. § 40-252.

In addition, and in connection with the power plant aspect of the project, which is the subject of Decision No. 64625, Bowie commenced construction in 2007. In that regard, included as Appendix "C" is a copy of a letter dated November 1, 2007, from the Arizona Department of Environmental Quality that recognizes the construction status of the project. Bowie currently anticipates the first phase of the power plant, nominally 500 megawatts, will achieve commercial operation by the third quarter of 2010.

Attached as Appendix "D" is the current "switching diagram" depicting the entire Bowie-Willow Interconnection, which is the subject of Bowie's developing interconnection agreement with Tucson Electric Power Company.

Finally, Bowie continues its active involvement in regional transmission planning organizations, including WestConnect and the Southwest Area Transmission Study group (a.k.a. "SWAT" Committee), and the latter's many subcommittees. Bowie also remains an Affiliate Member in good standing in the Western Electric Coordinating Council.

Please direct any questions that may arise from this report to the undersigned at (602) 808-2004.

Sincerely,

Tom C. Wray
Manager, Transmission and Generation Projects

Appendices (4)

Cc: File
Ernest Johnson, Utilities Division
Christopher Kempley, Esq., Legal Division
David Getts, Southwestern Power Group
Lawrence V. Robertson, Jr., Esq., Munger & Chadwick, P.A.

Appendix "A"

Bowie Power Station
Ten Year Plan for 2008

RE: Bowie Power Station Ten Year Plan for 2008
Docket Number L-00000BB-01-0118
Decision Numbers 64625, 64626 and 69339

Appendix A

Pursuant to A. R. S. § 40-360.02, Bowie Power Station L.L.C. ("Bowie") hereby submits its Ten Year Plan as of January 30, 2008 regarding transmission plans that are the subject of Decision Numbers 64625 and 64626. The requirements arising from the revised statutes cited above are formatted in italics, followed by Bowie's response.

1. ***The size and proposed route of any transmission lines or location of each plant proposed to be constructed.***

The location of the power plant as described in the Application and Record of Docket Number L-00000BB-01-0118 (the "Bowie Docket") remains unchanged.

The transmission interconnection of the power plant at Bowie with the underlying grid remains unchanged from that described in the Bowie Docket: an approximately 15-mile, double-circuit 345 kV tranmission line from the point-of-interconnection on the existing Greenlee-Winchester-Vail 345 kV line, that is owned and operated by Tucson Electric Power, which is known as the Willow Substation, and thence to the Bowie Plant Switchyard.

As described in earlier filings, the route of the transmission line approved by the Arizona Power Plant & Transmission Line Siting Committee, and affirmed by the Commission, requires minor alignment modification to comply with requirements of the Arizona State Land Department ("ASLD"). In addition ASLD also requires minor modification of the placement of the Willow Substation. As part of ASLD's ground lease process, environmental, cultural and biological clearances, surveys and examinations, in conjunction with the appropriate state and federal agencies, have either been completed or will be completed soon.

Bowie has undertaken consultation of this matter with Commission Staff and believe that, upon receipt of final acceptance of the adjusted route by ASLD, these changes (i) taken together, will not amount to a substantial change, and (ii) will qualify for an amendment to Decision Number 64626 pursuant to A. R. S. § 40-252.

2. ***The purpose to be served by each proposed line or plant.***

The purpose to be served by the proposed transmission line and the power plant remains unchanged from that described in the original Bowie Docket.

3. ***The estimated date by which each transmission line or plant will be in operation.***

All permits necessary to begin construction of Bowie have been obtained. The project has commenced construction activities. Attached to this report as Appendix B is a letter from the Arizona Department of Environmental Quality dated November 1, 2006, which characterizes Bowie's construction status.

Current planning anticipates operation of Bowie as follows:

a. Initial energization of all 345 kV interconnection facilities by December 31, 2009; and,

b. Commercial operation of the initial 500 MW (nominal) power block by June 1, 2010.

4. ***The average and maximum power output measured in megawatts of each plant installed.***

The average and maximum power output measured in megawatts of the Bowie Power Station that was described in the Bowie Docket remains unchanged.

5. ***The expected capacity factor for each proposed plant.***

The expected capacity factor for the Bowie Power Station that was described in the Bowie Docket remains unchanged.

6. ***The type of fuel to be used for each proposed plant.***

The type of fuel to be used for the Bowie Power Station that was described in the Bowie Docket remains unchanged.

7. ***The plans' for any new facilities shall include a power flow and stability analysis report showing the effect on the current Arizona electric transmission system. Transmission owners shall provide the technical reports, analysis or basis for projects that are included for serving customer load growth in their service territories.***

Bowie and Tucson Electric Power are conducting revised system impact studies, including power flow analyses, short-circuit duty studies and transient impact studies that are founded on an agreed on revised base case that reflects expected system additions and load growth patterns. These studies will continue to evolve as system parameters change and plans dictate. All study materials, when final and available, will continue to be provided to the Commission Staff for their information and use.

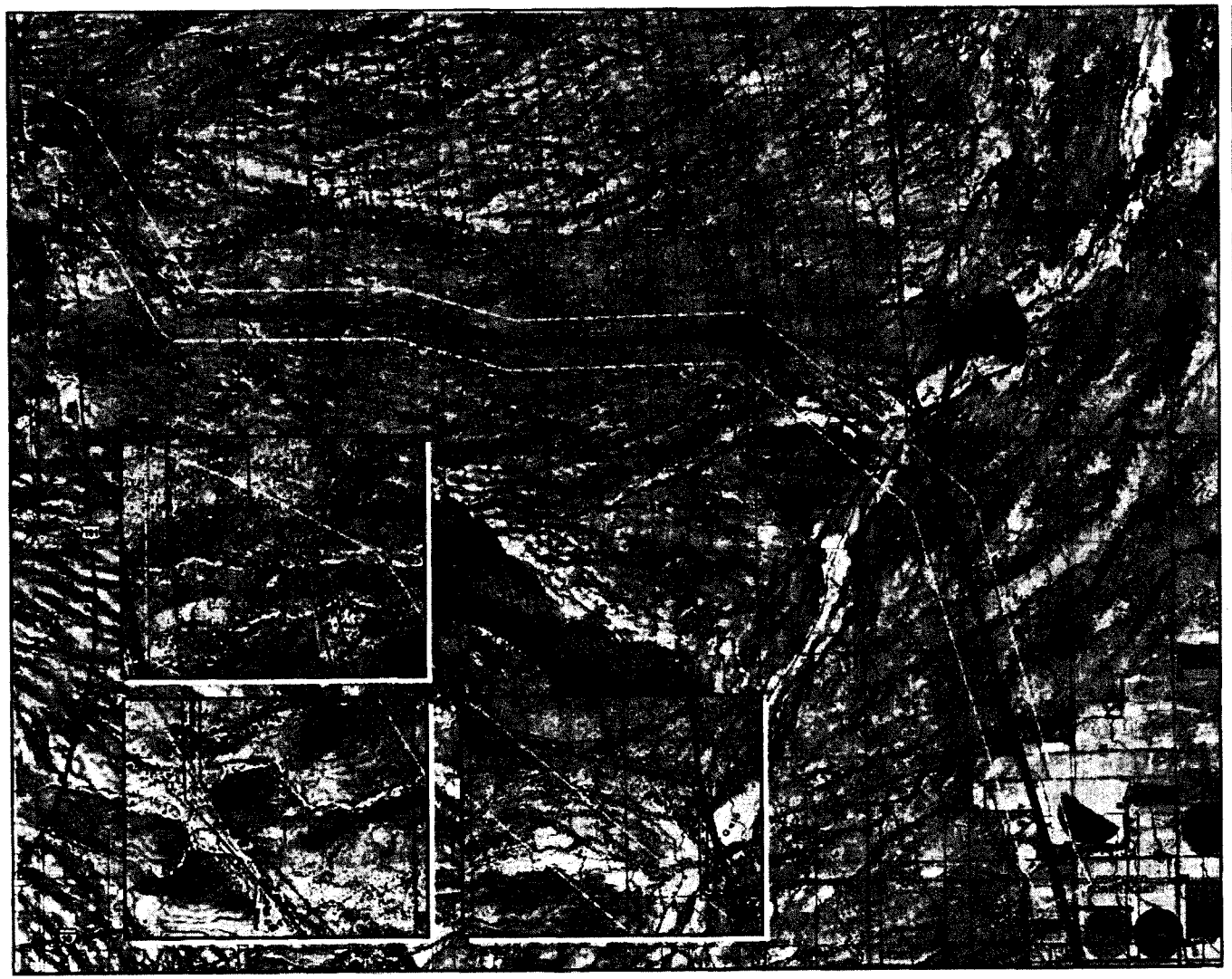

BOWIE

PROPOSED TRANSMISSION LINE ALIGNMENT

LEGEND

- Alternative Transmission Line
- Approved 345kV Transmission Line Corridor - Certificate of Environmental Compatibility (2002)
- 250' Cultural Resource Survey
- Proposed ASLD 175' Wide Easement
- 230kV Transmission Line
- 345kV Transmission Line

October 15, 2007

0 1 2

Scale in Miles

Appendix "B"

Bowie Power Station
Ten Year Plan for 2007

SOUTHWESTERN
Power Group II, LLC
An Energy Company - Alliance Builder

RECEIVED

2007 JAN 31 P 4: 24

AZ CORP COMMISSION
DOCUMENT CONTROL

January 29, 2007

Docket Control
Arizona Corporation Commission
1200 West Washington
Phoenix, Arizona 85007

Re: Bowie Power Station, L.L.C.
10-Year Plan For 2007
(Docket No. L-00000BB-01-0118)

To Whom It May Concern:

Pursuant to A.R.S. § 40-360.02 (A) and (C), Bowie Power Station, L.L.C. ("Bowie") hereby submits its 10-Year Plan for 2007 for the transmission line facilities which are the subject of the Certificate of Environmental Compatibility ("CEC") which was granted by the Commission on March 7, 2002 in Decision No. 64626. As used herein, the phrase "transmission line" includes all facilities contained within the definition of that phrase as set forth in A.R.S. § 40-360.

Attached hereto as Appendix "A" and incorporated by reference is a copy of the 10-Year Plan Bowie filed with the Commission for 2006. The only change in the information contained in the 2006 10-Year Plan relating to the transmission line, which has occurred during the intervening time period, pertains to the proposed route.

More specifically, representatives of the Arizona State Land Department ("ASLD") and Bowie recently agreed upon certain minor adjustments to the route of the transmission line as it traverses ASLD land, in order to comply with a recently formulated ASLD policy that electric transmission line right(s)-of-way parallel section lines on ASLD to the maximum extent practicable. Accordingly, and pursuant to A.R.S. § 40-360.02 (C)(1), attached hereto as Appendix "B" is a copy of a map which indicates the nature and location of those changes in the transmission line route as it crosses ASLD land. In all other respects, as pertinent to the transmission line, the information required under A.R.S. § 40-360.02 (C) remains the same as contained in the attached copy of Bowie's 2006 10-Year Plan.

As the Commission and its Staff are aware, Bowie does under consideration the possibility of re-permitting the natural gas-fired electric generating plant, which was the subject

3610 North 44th Street · Suite 250 · Phoenix, Arizona 85018
888.332.4599 · Tel 602.808.2004 · Fax 602.808.2099
www.southwesternpower.com

of the CEC granted by the Commission in companion Decision No. 64625, as an Integrated Gasification Combined Cycle ("IGCC") electric generating plant. In the event that Bowie pursues that course of action, and the Commission either amends the existing power plant CEC or grants a new CEC, Bowie will file such changes to this 2007 10-Year Plan for the transmission line as may be necessary or appropriate; or, depending upon timing, it will reflect such changes in its 10-Year Plan for 2008.

Please let me know if you have any questions regarding the above information or the attached appendices.

Sincerely,

David Getts, General Manager
Bowie Power Station, L.L.C.

cc: Ernest Johnson (ACC Utilities Division)
Christopher Kempley (ACC Legal Division)
Laurie Woodall (Chairman, ACC Legal Division)
Gary Crane (Environmental Manager, SWPG)
Lawrence V. Robertson, Jr. (Munger Chadwick, PLC)

APPENDIX "A"

SOUTHWESTERN
Power Group II, LLC
An Energy Company - Alliance Builder

RECEIVED

2006 JAN 31 P 3: 02

AZ CORP COMMISSION
DOCUMENT CONTROL

January 31, 2006

Ms. Colleen Ryan, Supervisor
Document Control Center
Arizona Corporation Commission
1200 West Washington
Phoenix, Arizona 85007

Re: **Update For 2006**
Annual Ten-Year Plan For Bowie Power Station, L.L.C.
(Docket No. L-00000BB-01-0118)

Dear Ms. Ryan:

The purpose of this letter is to provide notice that Southwester Power Group II, L.L.C. ("SWPG") is updating its 2006 Ten-Year Plan (see attachment) for the Bowie Power Station. Our update is meant to address provision A.R.S. § 40-360.02. With this provision in mind, SWPG advises that we are contemplating that the fully permitted natural gas fired Bowie Power Station may be re-permitted as a coal-fired facility. In addition, SWPG is contemplating a new 51-mile transmission alignment from the Bowie Power Station to the Winchester Substation.

In the event that SWPG ultimately decides to proceed with the newly proposed coal project, SWPG will make all required filings, including those prescribed in A.R.S. §§ 40-360 *et seq*.

Please let me know if you have any questions.

Sincerely,

Tom Wray

Tom Wray
General Manager

Cc:
Ernest Johnson w attachments (Utility Director)
Jerry Smith w attachments (Utility Engineer)
Gary Crane w/o attachments (SWPG)
Laurie Woodall w attachments (Chairman, Siting Committee)
Lawrence V. Robertson w attachments (Munger Chadwick, PLC)

4350 East Camelback Road · Suite B175 · Phoenix, Arizona 85018
P.O. Box 15491 · Phoenix, Arizona 85060
888.332.4599 · Tel 602.808.2004 · Fax 602.808.2099
www.southwesternpower.com

SOUTHWESTERN
Power Group II, LLC
An Energy Company - Alliance Builder

January 31, 2006

Ms. Colleen Ryan, Supervisor
Document Control Center
Arizona Corporation Commission
1200 West Washington
Phoenix, Arizona 85007

Re: Annual Ten-Year Plan For Bowie Power Station, L.L.C.
(Docket No. L-00000BB-01-0118)

Dear Ms. Ryan:

Pursuant to Arizona Revised Statutes (A.R.S. 40-360.02), Bowie Power Station L.L.C. ("Bowie") hereby submits its current (January 31, 2006) Ten-Year Plan for the fully permitted electric generating station and associated transmission line. In order to simplify the current plan for the reader, Bowie will differentiate changes made from the Ten–Year Plan of January 2005. For reference, the January 2005 plan is provided at the end of this letter. The same organization requirements specified in A.R.S. 40-360.02, and protocol used in the past (i.e. 2002, 2003, 2004 & 2005) Ten-Year Plan will be followed in this plan. The requirements within the revised statutes are formatted in italics, and are followed by Bowie's response in normal (non-italicized) type.

1. ***The size and proposed route of any transmission lines or location of each plant proposed to be constructed.***

There are no known changes in the size and proposed route of transmission line or location of the proposed gas power plant.

2. ***The purpose to be served by each proposed line or plant.***

There are no known changes in the purpose of the proposed line or power plant as specified in the 2005 Ten-Year Plan.

3. ***The estimated date by which each transmission line or plant will be in operation.***

Bowie is in the process of renewing its air permit and anticipates the permit to be renewed in February 2006. Construction schedule for both the power plant and transmission line is dependent on power purchasers in either Arizona or Mexico. Construction of both the transmission facility and power station will commence concurrently after a contractual arrangement is entered into with a power purchaser.

4350 East Camelback Road · Suite B175 · Phoenix, Arizona 85018
P.O. Box 15491 · Phoenix, Arizona 85060
888.332.4599 · Tel 602.808.2004 · Fax 602.808.2099
www.southwesternpower.com

SOUTHWESTERN
Power Group II, LLC
An Energy Company - Alliance Builder

4. ***The average and maximum power output measured in megawatts of each plant installed.***

There are no known changes on the average and maximum power output as specified in the 2005 Ten-Year Plan.

5. ***The expected capacity factor for each proposed plant.***

There are no known changes on the expected capacity factor for the proposed power plant as specified in the 2005 Ten–Year Plan.

6. ***The type of fuel to be used for each proposed plant***

There are no known changes on the type of fuel to be used for the proposed power plant as specified in the 2005 Ten-Year Plan.

7. ***The plans' for any new facilities shall include a power flow and stability analysis report showing the effect on the current Arizona electric transmission system. Transmission owners shall provide the technical reports, analysis or basis for projects that are included for serving customer load growth in their service territories.***

There are no known changes or updates to the Interconnection System Impact Study completed in cooperation with Tucson Electric Power submitted with the 2003 Ten-Year Plan.

In the event you have any questions regarding the above, please feel free to contact me at (602) 808-2004.

Sincerely,

Tom Wray
General Manager

Cc:

Ernest Johnson w attachments (Utility Director)
Jerry Smith w attachments (Utility Engineer)
Gary Crane w/o attachments (SWPG)
Laurie Woodall w attachments (Chairman, Siting Committee)
Lawrence V. Robertson w attachments (Munger Chadwick, PLC)

4350 East Camelback Road · Suite B175 · Phoenix, Arizona 85018
P.O. Box 15491 · Phoenix, Arizona 85060
888.332.4599 · Tel 602.808.2004 · Fax 602.808.2099
www.southwesternpower.com

ATTACHMENTS

SOUTHWESTERN
Power Group II, LLC
An Energy Company - Alliance Builder

January 31, 2005

Ms. Colleen Ryan, Supervisor
Document Control Center
Arizona Corporation Commission
1200 West Washington
Phoenix, Arizona 85007

Re: Annual Ten-Year Plan For Bowie Power Station, L.L.C.
(Docket No. L-00000BB-01-0118)

Dear Ms. Ryan:

Pursuant to Arizona Revised Statutes (A.R.S. 40-360.02), Bowie Power Station L.L.C. ("Bowie") hereby submits its current (January 31, 2005) Ten-Year Plan for the fully permitted electric generating station and associated transmission line. In order to simplify the current plan for the reader, Bowie will differentiate changes made from the Ten–Year Plan of January 2003 & 2004. For reference, both the January 2003 and 2004 plan is provided at the end of this letter. The same organization requirements specified in A.R.S. 40-360.02, and protocol used in the 2003 & 2004 Ten-Year Plan will be followed in this plan. The requirements within the revised statutes are formatted in italics, and are followed by Bowie's response in normal (non-italicized) type.

1. ***The size and proposed route of any transmission lines or location of each plant proposed to be constructed.***

There are no known changes in the size and proposed route of transmission line or location of the proposed power plant. This is consistent with the 2003 and 2004 Ten-Year Plan. Discussions with the Arizona State Land Department (ASLD) in regard to Bowie's transmission corridor have terminated until contractual arrangements are executed with load-serving entities in the United States or in Mexico. In the event Bowie enters into a contractual arrangement with a potential power purchaser, discussions will be renewed with the ASLD and appropriate filings will be made with the Arizona Power Plant and Transmission Line Siting Committee and as needed other regulatory entities.

2. ***The purpose to be served by each proposed line or plant.***

There are no known changes in the purpose of the proposed line or power plant as specified in the 2003 and 2004 Ten-Year Plan. See Response No. 1 above as to current discussions and investigations that are ongoing.

3. ***The estimated date by which each transmission line or plant will be in operation.***

Bowie is in the process of renewing its air permit and anticipates the permit to be renewed in June 2005. Construction schedule remains the same and is dependent on

4350 East Camelback Road · Suite B175 · Phoenix, Arizona 85018
P.O. Box 15491 · Phoenix, Arizona 85060
888.332.4559 · Tel 602.808.2004 · Fax 602.808.2099
www.southwesternpower.com

power purchasers in either Arizona or Mexico. Bowie anticipates commencing construction for the power station in the following time sequence:

Phase 1	4th quarter 2006
Phase 2	4th quarter 2007

The anticipated commercial in-service operation for the 345 kV and 230 kV transmission facilities associated with the power station will be no later than 4th quarter 2006. Construction of both the transmission facility and power station will commence concurrently after a contractual arrangement is entered into with a power purchaser.

4. ***The average and maximum power output measured in megawatts of each plant installed.***

There are no known changes on the average and maximum power output as specified in the 2003 and 2004 Ten-Year Plan.

5. ***The expected capacity factor for each proposed plant.***

There are no known changes on the expected capacity factor for the proposed power plant as specified in the 2003 and 2004 Ten-Year Plan.

6. ***The type of fuel to be used for each proposed plant***

There are no known changes on the type of fuel to be used for the proposed power plant as specified in the 2003 and 2004 Ten-Year Plan.

7. ***The plans' for any new facilities shall include a power flow and stability analysis report showing the effect on the current Arizona electric transmission system. Transmission owners shall provide the technical reports, analysis or basis for projects that are included for serving customer load growth in their service territories.***

There are no known changes or updates to the Interconnection System Impact Study completed in cooperation with Tucson Electric Power submitted with the 2003 Ten-Year Plan.

In the event you have any questions regarding the above, please feel free to contact me at (602) 808-2004.

Sincerely,

Tom Wray

Tom Wray
General Manager

Cc:

Ernest Johnson w attachments (Utility Director)
Jerry Smith w attachments (Utility Engineer)
Gary Crane w/o attachments (SWPG)
Laurie Woodall w attachments (Chairman, Siting Committee)
Lawrence V. Robertson w attachments (Munger Chadwick, PLC)

APPENDIX "B"

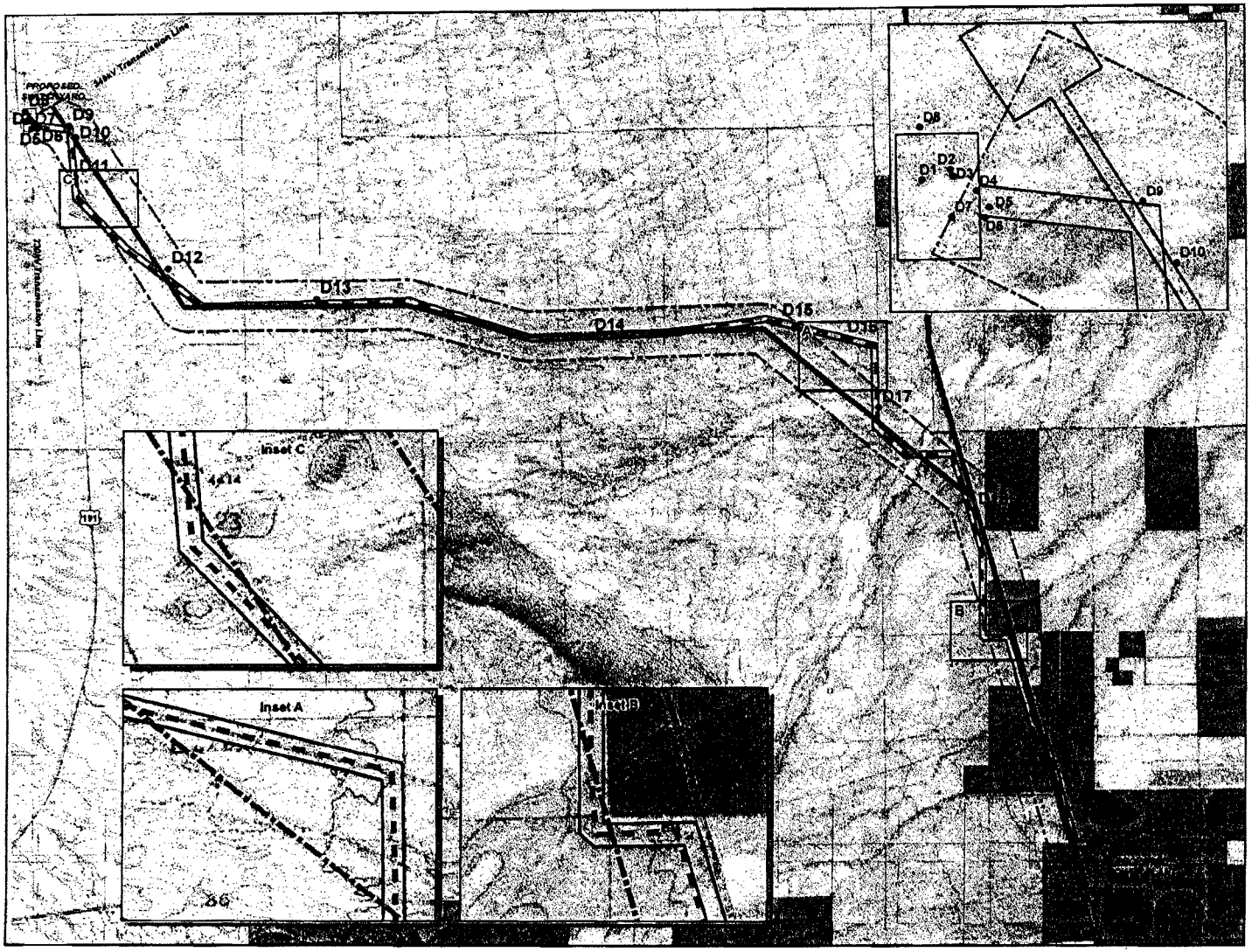

BOWIE POWER STATION

TRANSMISSION LINE ALTERNATIVES

OPTION C

LEGEND

- Alternative Transmission Line
- Approved 345kV Transmission Line Corridor - Certificate of Environmental Compatibility (2002)
- 300' ASLD Easement
- 120' 2001 Class III Cultural Survey Corridor

Land Ownership

- BLM
- State
- Private

DRAFT: January 15, 2007

0 1 2 Scale in Miles

S:\EPG\projects\BWPG\GIS\bowie8\fieldmap.mxd

Appendix "C"

ADEQ Letter

Dated November 1, 2007

ARIZONA DEPARTMENT OF ENVIRONMENTAL QUALITY

1110 West Washington Street • Phoenix, Arizona 85007-2935
(602) 771-2300 • www.azdeq.gov

Janet Napolitano
Governor

Stephen A. Owens
Director

CERTIFIED MAIL
RETURN RECEIPT REQUESTED

November 1, 2007

David Getts, Manager
Bowie Power Station LLC
3610 N 44th Street, Ste 250
Phoenix, AZ 85018

Subject: Commencement of Construction of the Bowie Power Station

Dear Mr. Getts:

The Arizona Department of Environmental Quality (ADEQ) is in receipt of your letter, dated October 23, 2007, documenting the steps that Bowie Power Station LLC (Bowie) has taken towards construction of the natural gas fired power plant granted Air Quality Permit Number 34918. As you know, the air permit was issued on March 13, 2006. In accordance with Arizona Administrative Code R18-2-402.D.4 (Condition II.B.1 of Attachment "B" of Permit Number 34918) the Director is required to terminate a permit if the proposed construction is not begun within 18 months of issuance. Your letter was submitted to demonstrate that Bowie "commenced construction" of the power plant prior to September 13, 2007.

"Commence" as applied to the construction of a source is defined by Arizona Administrative Code (A.A.C.) R18-2-101.27:

> [T]he owner or operator has all necessary preconstruction approvals or permits and either has:
>
> a. Begun, or caused to begin, a continuous program of actual on-site construction of the source, to be completed within a reasonable time; or
> b. Entered into binding agreements or contractual obligations, which cannot be cancelled or modified without substantial loss to the owner or operator, to undertake a program of actual construction of the source to be completed within a reasonable time.

The Department has reviewed the submitted information and finds that Bowie has demonstrated that all preconstruction approvals or permits have been obtained. Bowie has not begun actual on-site construction, therefore, your letter was submitted to demonstrate that Bowie has entered into binding agreements or contractual obligations to undertake a program of actual construction that cannot be cancelled or modified without substantial loss. The Department finds that several of the costs cited by Bowie demonstrating that a substantial loss would be incurred are not appropriate in determining if construction was commenced. Specifically, the present value of the pre-tax cash flow ($210 million) and the cost of real estate purchased by Bowie ($1.8 million) are not considerations for determining substantial loss with regard to commencing construction.

The Department does agree, however, that the purchase of the two turbines (at a cost of $78 million) should be considered toward the determination of substantial loss. In addition, the contract Bowie has signed with MMR Constructors, Inc (MMR) has a minimum cancellation fee of $4 million. Moreover, the Department is aware that on-site construction has not yet begun in large part because Bowie pursued approval to construct and operate an innovative coal fired power plant rather than the natural gas fired power plant and only recently concluded that a coal fired plant would not be feasible. The Department recognizes the extensive time and money that have been invested in the attempt to gain approval of the coal fired plant.

In light of these costs, and the overall project cost of $800 million, the Department finds that Bowie has entered into binding agreements that would result in substantial loss, and therefore has commenced construction of the Bowie Power Station.

If you have any questions please contact Trevor Baggiore at (602) 771-2321.

Sincerely,

Nancy C. Wrona, Director
Air Quality Division

NCW: tb4

cc: Kathleen Stewart, EPA Region IX

Appendix "D"

Bowie Power Station
Switching Diagram

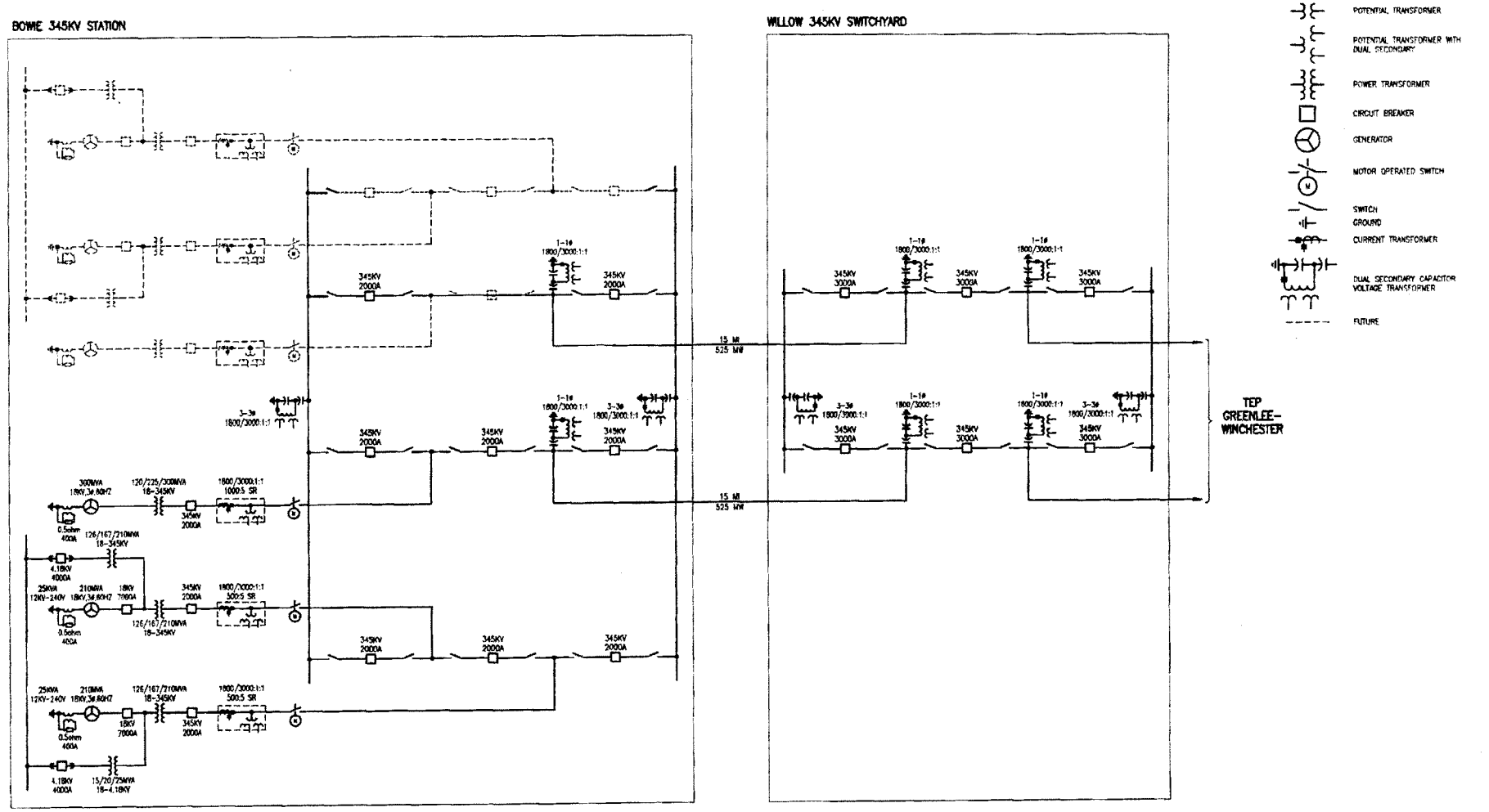

REV	REVISIONS	DATE	DRN	DSGN	CKD	APPD
B	MODIFIED PER 01-18-08 MEETING	01-18-08	SKL	BT		
A	ISSUED FOR REVIEW	11-26-07	SKL	BT		

REFERENCE DRAWINGS

DSGN	BT	11-26-07
DRN	SKL	11-26-07
CKD		

SCALE: NONE

FOR 22x34 DWG ONLY

BOWIE POWER STATION

SOUTHWESTERN POWER GROUP

BOWIE POWER STATION PROJECT

SWITCHING DIAGRAM

JOB NUMBER 113481

REV B

DRAWING NUMBER E8-1

THIS DRAWING WAS PREPARED BY POWER ENGINEERS, INC. FOR A SPECIFIC PROJECT, TAKING INTO CONSIDERATION THE SPECIFIC AND UNIQUE REQUIREMENTS OF THE PROJECT. REUSE OF THIS DRAWING OR ANY INFORMATION CONTAINED IN THIS DRAWING FOR ANY PURPOSE IS PROHIBITED UNLESS WRITTEN PERMISSION FROM BOTH POWER AND POWER'S CLIENT IS OBTAINED.

POWER ENGINEERS www.powerengs.com

Appendix "C"

345 kV Transmission Line Alignment Interconnecting Bowie Power Station to Willow Substation

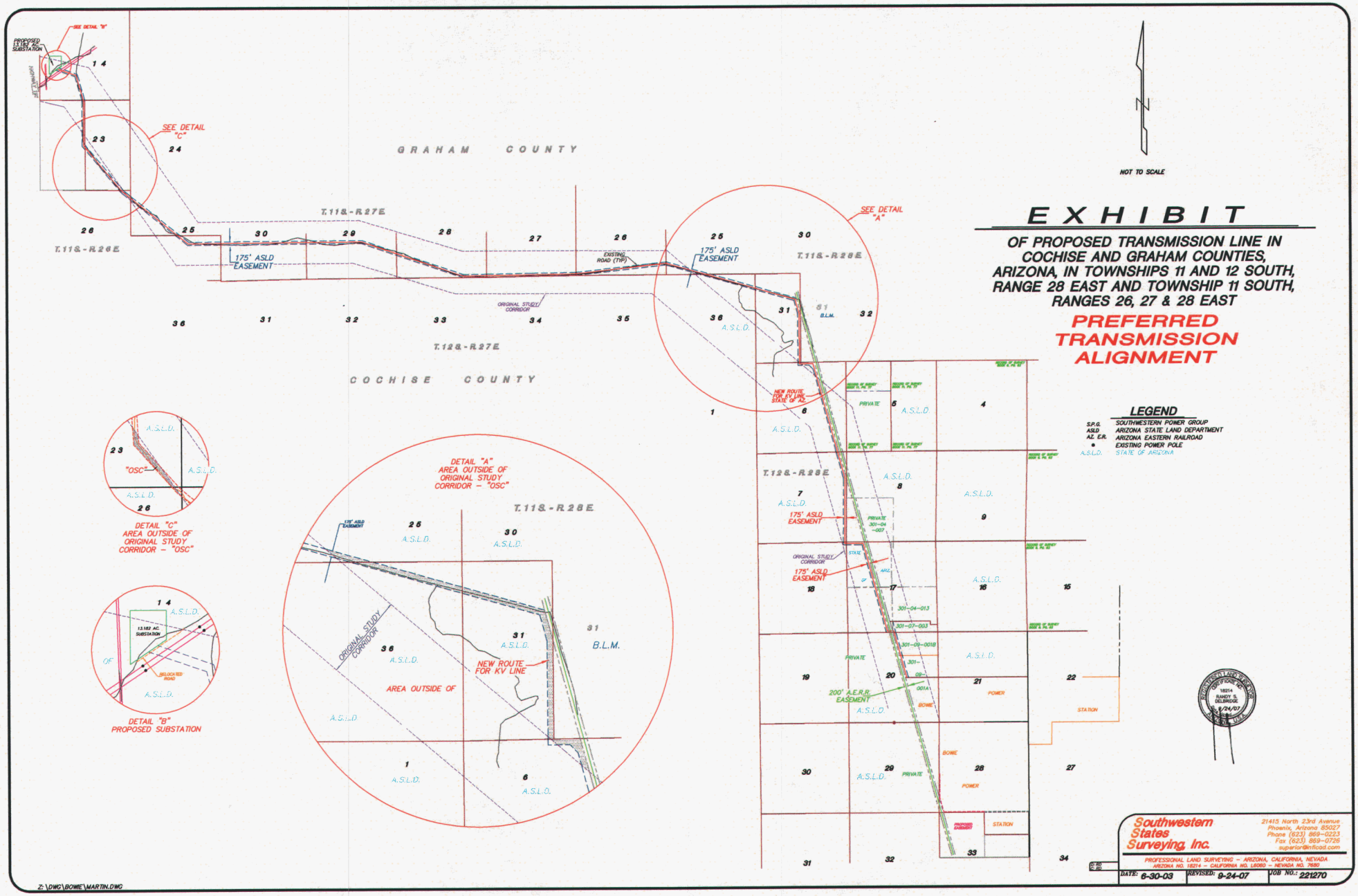
NOT TO SCALE
EXHIBIT
OF PROPOSED TRANSMISSION LINE IN COCHISE AND GRAHAM COUNTIES, ARIZONA, IN TOWNSHIPS 11 AND 12 SOUTH, RANGE 28 EAST AND TOWNSHIP 11 SOUTH, RANGES 26, 27 & 28 EAST
PREFERRED TRANSMISSION ALIGNMENT
LEGEND
S.P.G. SOUTHWESTERN POWER GROUP
ASLD ARIZONA STATE LAND DEPARTMENT
AZ. E.R. ARIZONA EASTERN RAILROAD
EXISTING POWER POLE
A.S.L.D. STATE OF ARIZONA
GRAHAM COUNTY
COCHISE COUNTY
T.11S.-R.26E
T.11S.-R.27E
T.11S.-R.28E
T.12S.-R.27E
T.12S.-R.28E
SEE DETAIL "A"
SEE DETAIL "B"
SEE DETAIL "C"
PROPOSED 13.182 AC. SUBSTATION
175' ASLD EASEMENT
EXISTING ROAD (TYP)
ORIGINAL STUDY CORRIDOR
NEW ROUTE FOR KV LINE STATE OF AZ.
200' A.E.R.R. EASEMENT
B.L.M.
A.S.L.D.
PRIVATE
POWER
STATION
BOWIE
DETAIL "A" AREA OUTSIDE OF ORIGINAL STUDY CORRIDOR - "OSC"
AREA OUTSIDE OF
DETAIL "C" AREA OUTSIDE OF ORIGINAL STUDY CORRIDOR - "OSC"
DETAIL "B" PROPOSED SUBSTATION
RELOCATED ROAD
Southwestern States Surveying, Inc.
21415 North 23rd Avenue
Phoenix, Arizona 85027
Phone (623) 869-0223
Fax (623) 869-0726
superior@inflocad.com
PROFESSIONAL LAND SURVEYING - ARIZONA, CALIFORNIA, NEVADA
ARIZONA NO. 18214 - CALIFORNIA NO. L8080 - NEVADA NO. 7680
DATE: 6-30-03
REVISED: 9-24-07
JOB NO.: 221270
Z:\DWG\BOWIE\MARTIN.DWG

Appendix "D"

Bowie Power Station
Switching Diagram

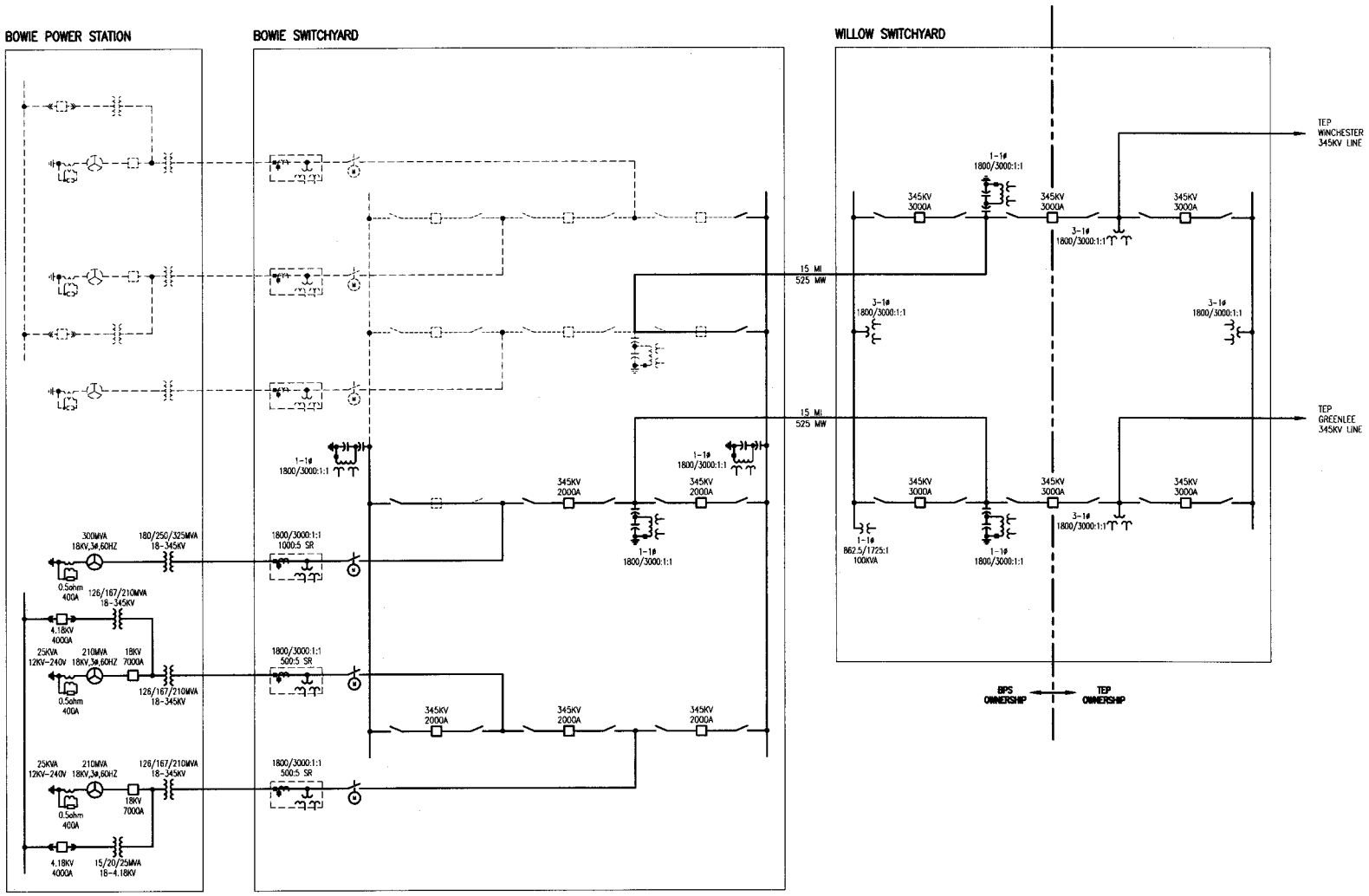

LEGEND

- POTENTIAL TRANSFORMER
- POTENTIAL TRANSFORMER WITH DUAL SECONDARY
- POWER TRANSFORMER
- COMBINED METERING UNIT
- CIRCUIT BREAKER
- GENERATOR
- MOTOR OPERATED SWITCH
- SWITCH
- GROUND
- CURRENT TRANSFORMER
- DUAL SECONDARY CAPACITOR VOLTAGE TRANSFORMER
- FUTURE
- BPS — BOWIE POWER STATION, LLC
- TEP — TUCSON ELECTRIC POWER
- SR — SINGLE RATIO

THIS DRAWING WAS PREPARED BY POWER ENGINEERS, INC. FOR A SPECIFIC PROJECT, TAKING INTO CONSIDERATION THE SPECIFIC AND UNIQUE REQUIREMENTS OF THE PROJECT. REUSE OF THIS DRAWING OR ANY INFORMATION CONTAINED IN THIS DRAWING FOR ANY PURPOSE IS PROHIBITED UNLESS WRITTEN PERMISSION FROM BOTH POWER AND POWER'S CLIENT IS GRANTED.

POWER ENGINEERS
www.powereng.com

REV	REVISIONS	DATE	DRN	DSGN	CKD	APPD
C	MODIFIED PER 11-25-08 MEETING	12-03-08	SKL	BT		
B	MODIFIED PER 04-02-08 MEETING	04-14-08	SKL	BT		
A	ISSUED FOR PROPOSAL	11-26-07	SKL	BT		

REFERENCE DRAWINGS

DSGN	BT	11-26-07
DRN	SKL	11-26-07
CKD		
SCALE:	NONE	

FOR 22x34 DWG ONLY

BOWIE

BOWIE POWER STATION, LLC

BOWIE POWER STATION PROJECT

SWITCHING DIAGRAM

JOB NUMBER 115696

REV C

DRAWING NUMBER E8-1

70BB_1.dwg

Appendix "E"

Bowie Power Station
Generator Interconnection Study Report

Bowie Power Station Project
Generator Interconnection Study

Final Report
May 13, 2008

Prepared for:

Southwestern Power Group ,LLC

Prepared by:
PDS Consulting, PLC

On behalf of:
Tucson Electric Power

EXECUTIVE SUMMARY

Southwestern Power Group, LLC (Customer) has submitted a completed generator interconnection application to Tucson Electric Power Company (TEP) for the Bowie Power Station Project (Bowie Project). The Bowie Project has been certificated by the Arizona Corporation Commission as a 1050 MW combined cycle generating project consisting of two 525 MW "two-on-one" generating facilities. Each of the Bowie Project facilities would consist of two gas-fired Combustion Turbine (CT) and a Steam Turbine (ST) generators which will run as a combined cycle plant. Each of the CTs is rated 160 MW and the ST is rated 235 MW. The plant auxiliary load is 15 MW. The total maximum plant output to the TEP transmission system will be 500 MW from each of the Bowie Project facilities. However, this interconnection study will examine the impact of a net output of 500 MW which comprises the initial phase of the project. The Project will be located near the town of Bowie in the state of Arizona and its output will be tapped onto TEP's existing Greenlee-Winchester 345 kV line at a newly proposed 345 kV substation named Willow. The commercial operation date of the initial phase of the Bowie Project is the third quarter of 2010

TEP elected a third party contractor, PDS Consulting, PLC (PDS), to perform the Generator Interconnection Studies (GIS) for the Bowie Project interconnection. The GIS analysis was performed using approved Western Electricity Coordination Council (WECC) 2010 heavy summer and 2010 light autumn[1] base cases to determine the impact of the Bowie Project on the TEP and the interconnected transmission systems. Studies performed included power flow, transient stability and short circuit analyses.

The power flow study results showed that the addition of the Bowie Project and the subsequent schedule of the project's output to the Palo Verde hub and New Mexico as requested by the customer caused a marginal overload (100.3%) on the MCKINLEY-YAHTAHEY 200 MVA, 345/138 kV transformer under normal operating condition. This marginal overload is attributable to the displacement of the local generation in New Mexico. The addition of the project also caused two new transmission facility overloads following a single element outage. In particular, the outage of the WINCHESTER-VAIL 345 kV line overloads the BUTERFIELD-APACHE 230 kV line (116%) and the BICKNELL 345/230 kV transformer (123%). The proposed mitigation for the Winchester-Vail 345kV line outage is to take one of the Bowie CT generators and the ST off-line via a special protection scheme immediately following the loss the line. Further, the study results showed that the addition of the project will cause the pre-existing contingency overloads on several TEP and the interconnected transmission system facilities to exacerbate. To mitigate the observed overloads detailed in this report, a special protection system would be needed to trip the entire or part of the Bowie Project following selected outages. Additionally, the project would have to be included in the existing or new operational procedures for mitigating the observed overloads.

[1]Since there is no WECC approved 2010 "off-peak" base case available in the WECC library, TEP provided an acceptable off-peak case to reflect a 2010 light autumn condition

The short circuit analysis found that the interconnection of the Bowie Project at the proposed Willow substation will cause an additional 3400A of three-phase and 4300A of single-line-to-ground fault duty on the TEP system. The incremental fault duty was not found to cause any regional interrupting facilities to exceed their respective ratings.

The transient stability analysis showed that the addition of the Bowie Project did not impact the stability of the existing transmission system.

CONTENTS

Introduction 1
Project and Interconnection Information 1
Study Base Case Description and Assumptions 4
Study Methodology and Evaluation Criteria 5
Power Flow Study Results 9
Mitigation Plan 15
Appendix A: Power Flow Maps 17
Appendix B: Summary of Power Flow Study Results 24
Appendix C: 2010 Heavy Summer Power Flow Study-Difference in Load Shed 29
Appendix D: Transient Stability Contingency List 33

ATTACHMENTS

Attachment A: 2010 Light Autumn Power Flow Study Results
Attachment B: 2010 Heavy Summer Power Flow Study Results
Attachment C: 2010 Light Autumn Pre-Project Transient Stability Plots
Attachment D: 2010 Light Autumn Post-Project Transient Stability Plots
Attachment E: 2010 Heavy Summer Pre-Project Transient Stability Plots
Attachment F: 2010 Heavy Summer Post-Project Transient Stability Plots

INTRODUCTION

Southwestern Power Group, LLC (Customer) has submitted a completed generator interconnection application to Tucson Electric Power Company (TEP) for the Bowie Power Station Project (Bowie Project). The Bowie Project has been certificated by the Arizona Corporation Commission as a 1050 MW combined cycle generating project consisting of two 525 MW "two-on-one" generating facilities. Each of the Bowie Project facilities would consist of two gas-fired Combustion Turbine (CT) and a Steam Turbine (ST) generators which will run as a combined cycle plant. Each of the CTs is rated 160 MW and the ST is rated 235 MW. The plant auxiliary load is 15 MW. The total maximum plant output to the TEP transmission system will be 500 MW from each of the Bowie Project facilities. However, this interconnection study will examine the impact of a net output of 500 MW which comprises the initial phase of the project. The Project will be located near the town of Bowie in the state of Arizona and its output will be tapped onto TEP's existing Greenlee-Winchester 345 kV line at a newly proposed 345 kV substation named Willow. The commercial operation date of the initial phase of the Bowie Project is the third quarter of 2010

TEP elected a third party contractor, PDS Consulting, PLC (PDS), to perform the Generator Interconnection Studies (GIS) for the Bowie Project interconnection. The GIS analysis was performed using approved Western Electricity Coordination Council (WECC) 2010 heavy summer and 2010 light autumn[2] base cases to determine the impact of the Bowie Project on the TEP and the interconnected transmission systems. Studies performed included power flow, transient stability and short circuit analyses.

The scope of this analysis is to identify the transmission system impacts caused solely by the addition of the initial phase of the Bowie Project, and to identify the system reinforcements, if any, necessary to mitigate the adverse impact of the Project under different system operating conditions.

PROJECT AND INTERCONNECTION INFORMATION

Table 1 provides the general project and interconnection information about the Bowie Power Station Project. The customer requested that the project be modeled using the electrical characteristics of the existing Gila River Power Station combined cycle plant with the understanding that the project will be re-evaluated once test reports are available for the exact machines to be utilized for the initial phase of the Bowie Project.

[2]Since there is no WECC approved 2010 "off-peak" base case available in the WECC library, TEP provided an acceptable off-peak case to reflect a 2010 light autumn condition

Project Location	Bowie, Arizona
Number and Type of Generators	Three (2 CTs and a ST)
Maximum Generator Output	555 MW
Generator Auxiliary Load	15 MW
Maximum Net Output to TEP's System	500 MW
Power Factor	CTs-0.85, STs-0.9
Step-up Transformer	Three 160/210/300 MVA, 18/345 kV 3-phase transformer, Z=10%
Interconnection Configuration	Taps onto TEP's Greenlee-Winchester 345 kV line. See Figure 2.
Interconnection Voltage	345 kV

Table 1: The Bowie Power Station Project General Information

Figure 1 depicts the Bowie Project interconnection point and the existing transmission system at the interconnection vicinity.

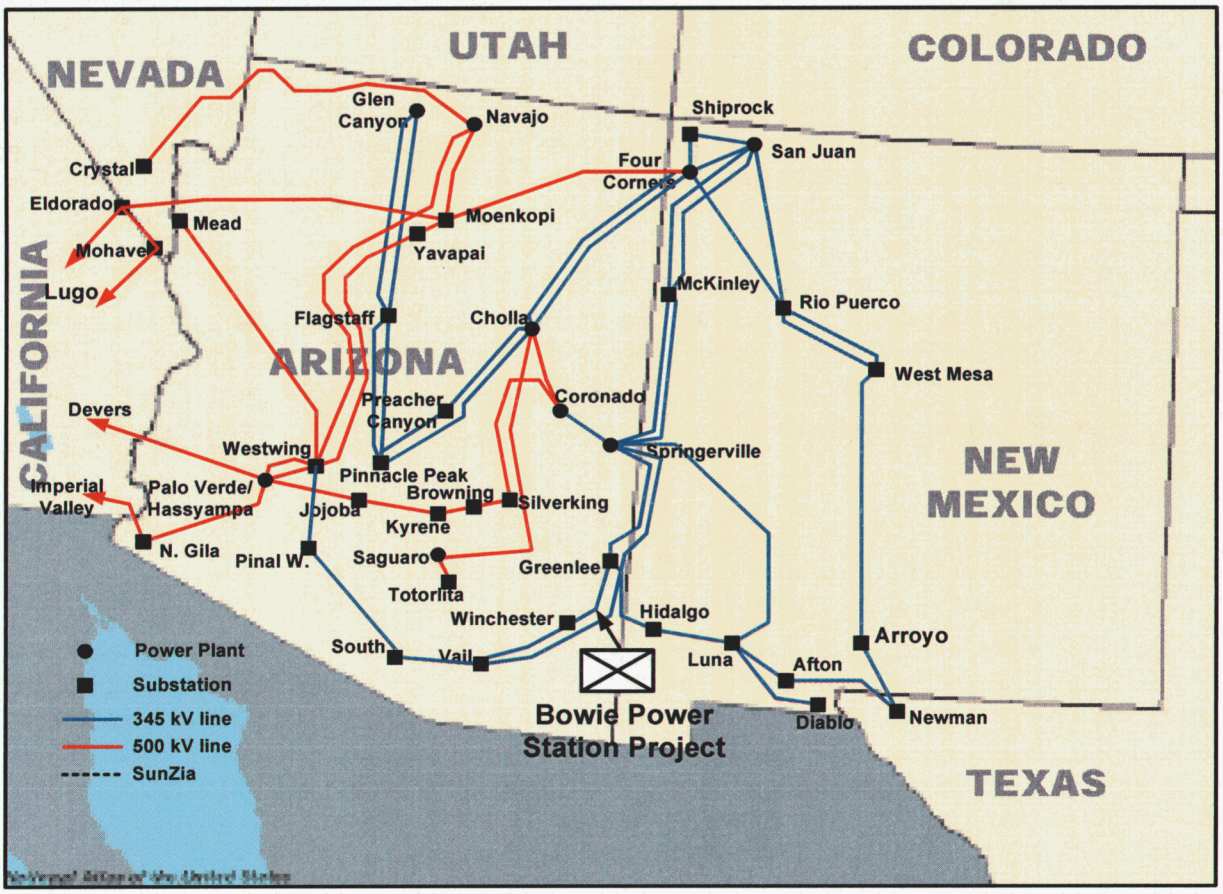

Figure 1: Bowie Project interconnection point and vicinity transmission system

A one line diagram of the project at the proposed interconnection point is shown in Figure 2.

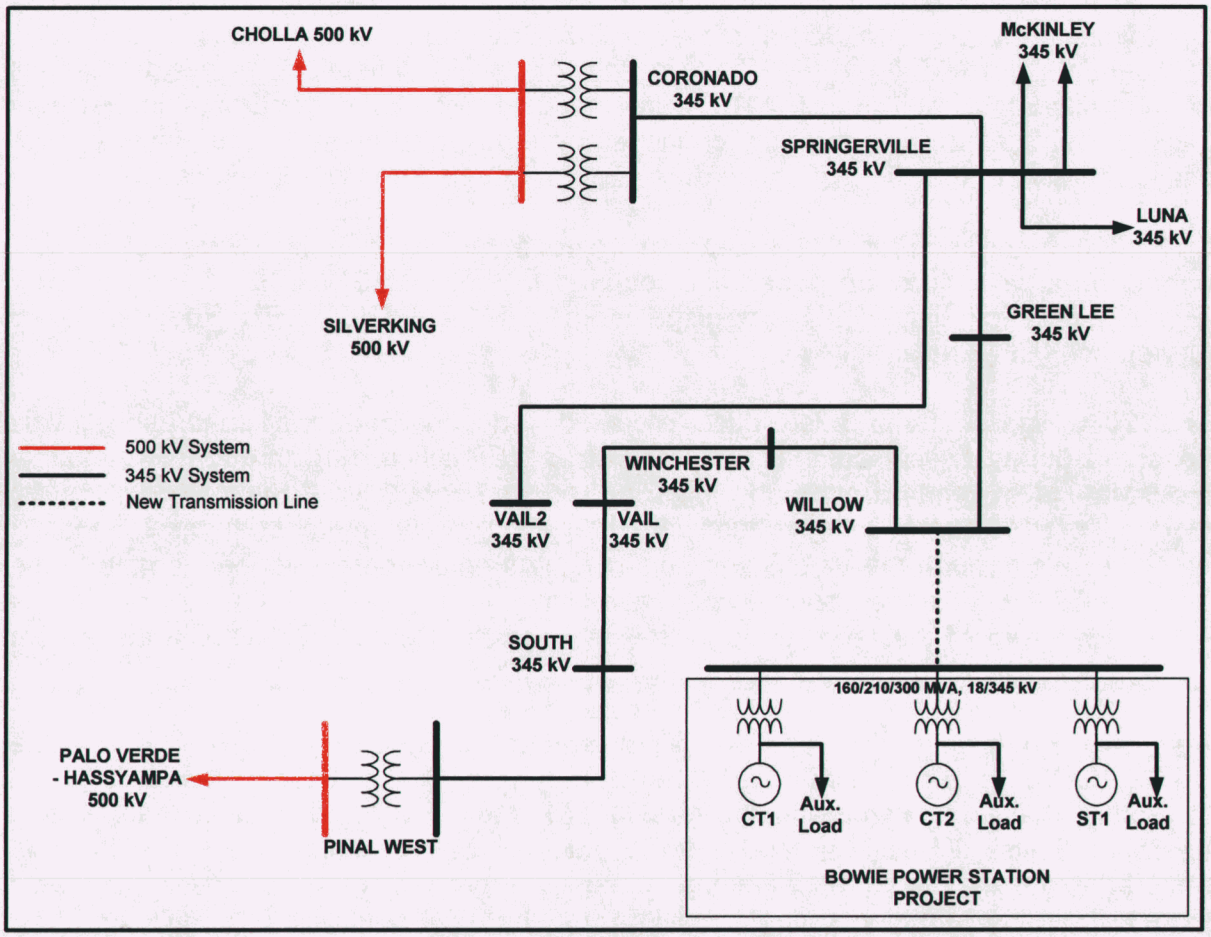

Figure 2: One-Line Diagram of the Bowie Project at the Interconnection point

STUDY BASE CASE DESCRIPTION AND ASSUMPTIONS

This analysis was conducted using two power flow base cases: Western Electricity Coordination Council (WECC) approved 2010 heavy summer (10hs2s.sav) and 2010 light autumn[3] (provided by TEP) base cases. Approved transmission projects that will be operational by autumn of 2010 were modeled. Proposed generation projects in TEP's control area that have interconnection queue date ahead of the Bowie Power Station Project and also have online date prior to autumn 2010 were modeled.

The 2010 heavy summer base case modeled a 1-in-10 year load forecast in TEP control area with minimum generation required to meet WECC/NERC standards. The Sundt generation units 1-4 were dispatched in this case to TEP's Required Local Generation (RLG) level.

The 2010 light autumn base case modeled reduced load and generation levels observed during typical autumn season. Due to TEP's financing through Two-County Industrial Development Bonds, the following requirements (Two-County Requirements) were adhered to during both the heavy summer and light autumn operating conditions.

- Flows through the Vail, South and Tortolita transformers must be inbound to the TEP 138 kV transmission system at all times
- The sum of the flows through the Vail and the South 345/138kV transformers must exceed the output of Springerville Unit #2

Also only Sundt generation unit #4 was dispatched to determine the RLG during the light autumn operating condition. The benchmark (pre-project) base cases were tested to ensure that all transmission facilities in TEP control area are within their normal operating limits. While it is impossible to study all combinations of system load and generation levels during all seasons, these two pre-project base cases represent extreme loading and generation conditions for the TEP control area. However, TEP cannot guarantee that the Bowie Project can operate at maximum rated output year round without impacting the transmission system during times and seasons not studied.

Two post-project base cases were developed from the pre-project cases. The post-project base cases modeled the proposed Bowie Project as depicted in Figure 2. The following transmission system modifications which are planned to be part of the Bowie Project were modeled in the post-project base cases:

- Upgrading of series capacitors on WINCHESTER – VAIL 345 kV line to 2000/2400 A (Continuous/Emergency ratings)
- Upgrading of series capacitors at VAIL2 end of SPRINGERVILLE – VAIL 2 345 kV line to 2000/2400 A (Continuous/Emergency ratings)
- Installation of a new 345/138 kV transformer at VAIL2 345 kV

[3]Since there is no WECC approved 2010 "off-peak" base case available in the WECC library, TEP provided an acceptable off-peak case to reflect a 2010 light autumn condition

The 500 MW of the total output of the proposed project were scheduled as follows: 300 MW to displace merchant generation at the Palo Verde –Hassayampa area generation and 200 MW to displace generation in New Mexico as requested by the customer.

STUDY METHODOLOGY AND EVALUATION CRITERIA

Power flow, transient stability, post-transient and short circuit analyses were performed on both the pre-project and the post-project cases to determine the impact of the Bowie Project on TEP transmission system. Specific studies conducted and their evaluation criteria are outlined below:

Power Flow Analysis

Power flow analysis was performed on both the pre-project and post-project base cases for the 2010 heavy summer and 2010 light autumn operating conditions. The two base cases were used to simulate the impact of the Project during normal operating conditions (N-0), as well as, single (N-1) and selected multiple contingencies. Over 1500 N-1 and selected multiple contingencies were simulated. These outages included:

- All single (138-500 kV) transmission circuit outages within the TEP control area.
- All single transformer outages within the TEP control area.
- All tie lines to adjacent control areas to TEP; as well as Cholla – Saguaro 500 kV
- All pairs of EHV from single contingency list and other TEP Category C contingencies as required.

The WECC/NERC and TEP planning standards were used to assess the adequacy of the study results. The power flow analysis related evaluation criteria that were used are summarized below:

- Pre-contingency bus voltage outside of the TEP control area must be between 0.95 per unit and 1.05 per unit.
- The TEP EHV bus voltages will be between 1.03 and 1.04 per unit
- The TEP 138 kV average bus voltage must be between 1.0210 and 1.0235 per unit. Individual TEP 138 kV bus voltages will be between 1.0145 and 1.026 per unit.
- Maximum voltage deviation allowed at all buses under contingency conditions will be 5% and 10% for N-1 and N-2 contingencies respectively.
- The TEP average 138 kV bus voltages post-contingency shall be between 0.98 and 1.05 per unit.
- Pre-disturbance loading to remain within continuous ratings of all equipment and line conductors.
- Post-disturbance loading to remain within emergency ratings of all equipment and line conductors.

- Load shed will be allowed for N-2 outages involving only EHV elements and for single-event 138 kV contingencies identified as TOLS-activating.
- Pre-contingency VAR flow from Tortolita into Saguaro 500 kV as monitored at Saguaro 500kV.
- For TEP local generation, VAR output will be set to 0.0 to 1.0 MVAR net pre-contingency.

Transient Stability Analysis

Transient stability studies were conducted on both the pre-project and post-project base cases for the 2010 heavy summer and 2010 light autumn operating conditions. Transient stability runs were simulated for 12 seconds excluding a 1 second pre-outage run to ensure the system is stable and positively damped.

Selected critical contingencies were simulated. Provided below are some of the outages simulated; full contingency list can be found at Appendix D:

- Full load rejection of proposed project
- Springerville-Vail2 345 kV line
- Greenlee-Winchester 345 kV line
- Greenlee-Willow 345kV (post-project)
- Willow-Winchester 345kV (post-project)
- Winchester – Vail 345kV line
- Greenlee – Hidalgo 345kV line
- Springerville – Coronado 345kV line
- Springerville – Luna 345kV line
- Springerville – McKinley 345kV line
- Coronado-Silver King 500kV line
- Four Corners – Moenkopi 500kV line
- Springerville-Greenlee & Springerville-Vail2 345 kV lines
- Four Corners – Cholla 345kV #1 and #2 lines

The following WECC transient voltage dip and transient frequency criteria were used to evaluate the impact of the project. A summary of the transient stability analysis evaluation criteria is provided in Table 2 and depicted graphically in Figure 3.

- WECC transient voltage dip criteria: The transient voltage dip must not exceed 25% at load buses or 30% at non-load buses for N-1 contingency. For N-2 contingency, the transient voltage dip must not exceed 30% at any bus. The maximum duration of the voltage dip of 20% at load buses must not exceed 20 cycles for N-1 contingency or 40 cycles for N-2 contingency.
- WECC transient frequency criteria: The minimum transient frequency for N-1 contingency is 59.6 Hz; if below 59.6 Hz, the duration must not exceed 6 cycles at load bus. For N-2 contingencies, the minimum transient frequency is 59.0 Hz; if below 59.0 Hz, the duration should not exceed 6 cycles at load bus.

NERC and WECC Categories	Outage Frequency Associated with the Performance Category (outage/year)	Transient Voltage Dip Standard	Minimum Transient Frequency Standard	Post Transient Voltage Deviation Standard
A System normal	Not Applicable	Nothing in addition to NERC		
B One element out-of-service	≥ 0.33	Not to exceed 25% at load buses or 30% at non-load buses. Not to exceed 20% for more than 20 cycles at load buses.	Not below 59.6Hz for 6 cycles or more at a load bus.	Not to exceed 5% at any bus.
C Two or more elements out-of-service	0.033 – 0.33	Not to exceed 30% at any bus. Not to exceed 20% for more than 40 cycles at load buses.	Not below 59.0Hz for 6 cycles or more at a load bus.	Not to exceed 10% at any bus.
D Extreme multiple-element outages	< 0.033	Nothing in addition to NERC		

Table 2: Stability and Post-transient Analysis Evaluation Criteria

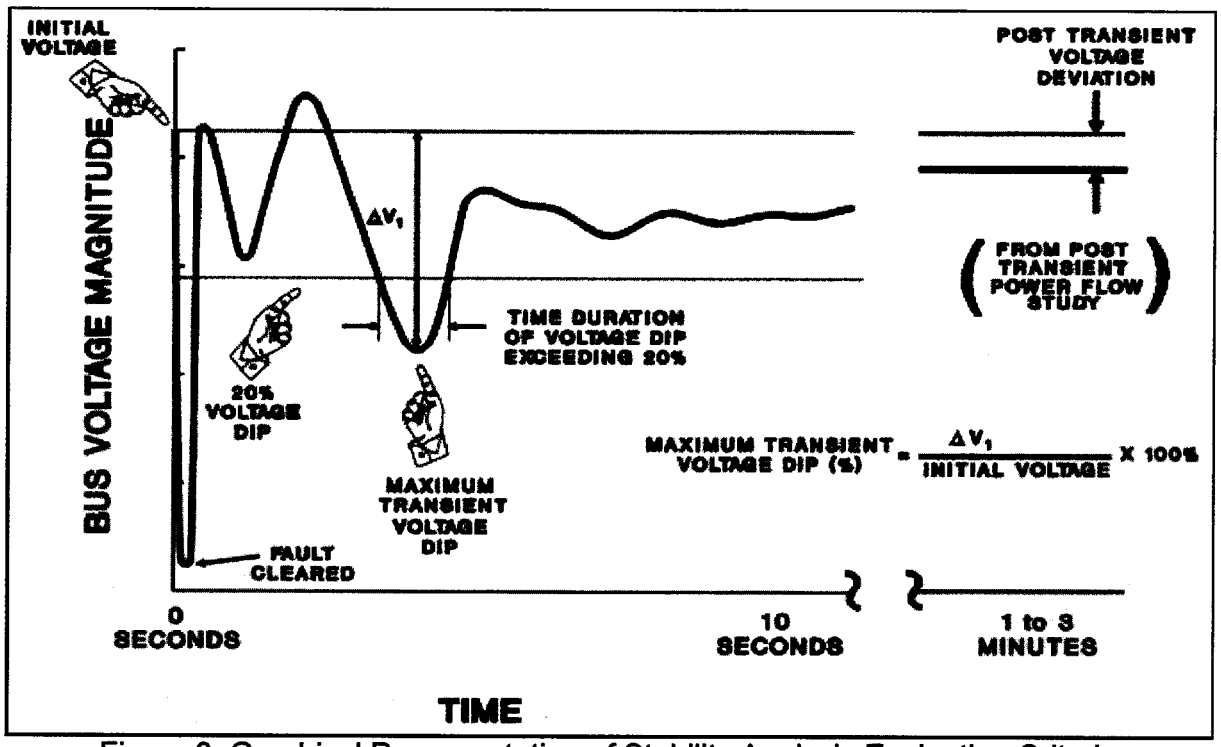

Figure 3: Graphical Representation of Stability Analysis Evaluation Criteria

Short Circuit Analysis

Short circuit studies were performed to evaluate the impact of the addition of the Bowie Power Station Project on selected TEP substation breaker duties.

STUDY RESULTS

Power Flow Analysis Results

a) 2010 Light Autumn Base Case

The 2010 light autumn pre-project base case was initially tested to ensure it meets TEP's Two-County Requirements with all lines in service. Also TEP's RLG requirement was determined prior to the power flow analysis. Table 3, provides a summary of the results of the pre- project base case screening. Similar screening was performed with the addition of the Bowie. Power flow Maps for both 2010 light autumn pre- and post-project base cases can be found at Appendix A, Sections 1 and 2 respectively.

Attributes	2010 Light Autumn		Comments
	Pre-project	Post-project	
Average TEP 138 kV Bus Voltages (per unit)	1.0232	1.0230	Within range for Pre-project and Post-project cases
Two-County Requirements			
Sum of Vail/South 345/138 kV Transformer Flows (MW)	488	536	Addition of Bowie did not violate Two-County Requirements
Are flows through Vail / South / Tortolita inbound to TEP	Yes	Yes	
Springerville Unit 2 Output (MW)	400	400	
RLG Requirements			
Local Generation Required to meet Reliability (MW)	30	30	RLG requirements not impacted with addition of Bowie

Table 3: Summary of 2010 Light Autumn Pre- and Post-Project Screening

As evident from Table 3, the addition of the Bowie project did not impact the average TEP 138 kV bus voltages, the Two-County requirements and the benchmarked RLG requirements during light autumn conditions.

Following the pre- and post-project screening, power flow simulations were conducted on both the pre- and post-project base cases. Power flow solutions were achieved for all the outages simulated. Appendix B, Table B1 summarizes the results of the power flow analysis. Detailed results of the power flow analysis are provided in Attachment A.

Key findings from the power flow studies using the 2010 light autumn base case are:

- The Shiprock 345/230 kV transformer was found to overload up to 104% in the 2010 light autumn pre-project base case. With the addition of the Bowie and subsequent schedule of its output to Palo Verde hub and New Mexico, the overload exacerbated to 106%
- The Copper Verde 345/230 kV transformer was found to overload up to 104% for the outage of the Greenlee-AE-Greenlee 345kV line in the pre-project base case. With the addition of the Bowie, the overload was found to persist at 104%. Also, a pre-existing contingency overload on Green-AE 345/230 kV transformer

was found to be119% following the loss of the Greenlee-Copper Verde 345kV line. This overload persisted at 119% with the addition of the Bowie.

- The simultaneous outages of the GREENLEE – WILLOW 345 kV and WINCHSTR-VAIL 345 kV lines cause three (3) new transmission facilities to overload. The facilities overloaded following this category D outage are: WINCHSTR-APACHE 230 KV LINE (104%), WINCHSTR 345/230 KV TRANSFORMER (118%) and BICKNELL 345/230 KV TRANSFORMER (109%)

b) 2010 Heavy Summer Base Case

Prior to the simulation of the power flow analysis, the 2010 heavy summer pre-project base case was tested to ensure it meets TEP's Two-County Requirements with all transmission facilities in service. TEP's RLG required to meet reliability was determined. Table 4, provides a summary of the results of the pre- project base case screening. Similar screening was performed with the addition of the Bowie. Power flow Maps for both 2010 heavy summer pre- and post-project base cases can be found at Appendix A, Sections 4 and 5 respectively.

Attributes	2010 Heavy Summer		Comments
	Pre-project	Post-project	
Average TEP 138 kV Bus Voltages (per unit)	1.0217	1.0231	Within range for Pre-project and Post-project cases
Two-County Requirements			
Sum of Vail/South 345/138 kV Transformer Flows (MW)	1341	1426	Addition of Bowie did not violate Two-County Requirements
Are flows through Vail / South / Tortolita inbound to TEP	Yes	Yes	
Springerville Unit 2 Output (MW)	400	400	
RLG Requirements			
Local Generation Required to meet Reliability (MW)	524	399	RLG level following the addition of Bowie is found to be lower that pre-project level of 524 MW

Table 4: Summary of 2010 Heavy Summer Pre- and Post-Project Screening

The RLG screening study effort for the 2010 heavy summer pre-project base case showed that with all the TEP local generation dispatched, the outage of PINALWES – SOUTH 345 kV line overloads the AVRA – SANDARIO 115 kV line. This overload was noted but ignored in the determination of the RLG required since there is insufficient local generation available to mitigate the observed overload. The RLG level was reduced until the next critical transmission facility limit was observed following a selected critical Category B or C outage. It was observed that the outage of SAGUARO-TORTOLIT 500 kV line (or SAGUARO-TORTOLIT2 500 KV line) loads the TORTOLIT2 500/138 kV transformer (or TORTOLIT 500/138 transformer) up to 99.8%. This established the pre-project RLG level which was used for the post-project evaluation. The pre-project RLG was calculated to be 524 MW.

The post-project RLG screening study effort showed that the required RLG level to reliably operate the TEP transmission system with the addition of Bowie is 399 MW, which is much lower than the established pre-project RLG level of 524 MW. The post-project RLG requirement was limited by the contingency loading on the IRVNGTN – SOUTH 138 kV line following outage of the VAIL 345/138 kV transformer. The outage of VAIL 345/138 kV transformer loads the IRVNGTN – SOUTH 138 kV line up to 100%.

As evident from Table 4, the addition of the Bowie project did not impact the average TEP 138 kV bus voltages, the Two-County Requirements and the required RLG level during heavy summer operating conditions.

Power flow simulations were conducted on both the pre- and post-project base cases. Power flow solutions were achieved for all the outages simulated. Appendix B, Table B2 summarizes the results of the power flow analysis. Detailed results of the power flow analysis are provided in Attachment B.

Key findings from the power flow studies using the 2010 heavy summer base case are:

- MCKINLEY-YAHTAHEY 345/138 kV TRANSFORMER was marginally overloaded (100.3%) with the addition of the Bowie Project with all transmission facility in service. The pre-project loading on the transformer is 72%.
- The addition of the Bowie Project triggered two new single contingency (Category B) overloads; the BUTERFLD-APACHE 230 KV LINE (116%) and the BICKNELL 345/230 KV TRANFORMER (123%) overloads following the outage of the WINCHSTR-VAIL 345 kV LINE. Further, the addition of the Bowie Project causes the existing contingency overload on the GREEN-AE 345/230 KV TRANSFORMER to exacerbate from 143% to 166% following the outage of the GREENLEE-COPPER VERDE 345 KV line. Also, the pre-project contingency overload on COPPER VERDE 345/230 KV TRANSFORMER exacerbated from 111% to 131% following the outage of GREENLEE or WILLOW to WINCHSTR 345 KV LINE.
- The interconnection of the Bowie Project and the subsequent dispatch of its output to Palo Verde hub and New Mexico caused several new transmission facilities to be overloaded following selected Category D outages. In particular, the simultaneous outages of the GREENLEE – WILLOW 345 kV and WINCHSTR-VAIL 345 kV lines caused five (5) new transmission facilities to overload. Aside these overloads, the addition of the Bowie Project also causes the existing contingency overloads on eight (8) transmission facilities to exacerbate following selected category C/D outages. Attachment F details the transmission facility overloads.
- The study also showed that the addition of the Bowie Project causes an increase in the amount of TEP load shed following specific critical outages. Appendix C, Table C1 summarizes the difference in load shed between the pre- and the post-project during summer operating condition. While it is recognized that the addition of Bowie resulted in less load shed following most of the outages studied, it however caused the required amount of load to be shed for the simultaneous outages of the CHOLLA – SAGUARO 500 KV line and MCKINLEY

– YAHTAHEY 345/115 kV transformer to increase by 800 MW from the pre-project level. Actually, any multiple outages that include the MCKINLEY – YAHTAHEY 345/115 kV transformer were found to result in substantial increase in load shed from pre-project levels. This is attributable to the displaced generation in New Mexico. The displaced generator was found to provide the dynamic reactive needs for the New Mexico transmission system and thus its displacement resulted in higher load shed following the outage of MCKINLEY – YAHTAHEY 345/115 kV transformer. When a different generator was displaced by the Bowie project output, zero load shed was recorded for the simultaneous outages of the CHOLLA – SAGUARO 500 KV line and MCKINLEY – YAHTAHEY 345/115 kV transformer. Another example of a situation where the addition of Bowie Project resulted in a significant increase in the amount of load shed is the simultaneous outage of the SPRINGERVILLE-VAIL2 and VAIL-SOUTH 345 kV lines. In this case, the amount of load shed required is 520 MW while the amount required for the same outage prior to the addition of Bowie project was 0 MW.

Transient Stability Analysis Results

The transient stability analysis were performed on both the 2010 light autumn and 2010 heavy summer pre- and post-project base cases. The contingency lists for the analysis can be found at Appendix D. TEP's standard set of bus voltage plots, frequency plots and machine angle plots for each contingency can be found at Attachments C, D, E and F.

The key findings of the stability analysis are:

- All contingencies resulted in transient stability with positive damping.
- No violation of WECC transient voltage dip criteria was found.
- No violation of WECC transient frequency criteria was found.

Short Circuit Analysis

A short circuit study and breaker capability analysis has been performed to determine the incremental impact of the generation addition proposed with the Bowie Power Station generation Project.

Study Data

To perform the short circuit study, the Bowie generation addition was modeled in the TEP short circuit case using the ASPEN One-Liner software.

The following data was used to prepare the short circuit case:

345 kV Line Impedances (Willow is the Point of Interconnection with TEP)

GREENLEE – WILLOW	Z1=0.00183 + j0.01873 p.u. Z0=0.01092 + j0.07573 p.u.
WILLOW-WINCHESTER	Z1=0.00224 + j0.0233 p.u. Z0=0.01335 + j0.09256 p.u.
Bowie – WILLOW	Z1=0.00065 + j0.00756 p.u. Z0=0.00195 + j0.02268 p.u.

Generator Step-up Transformers (three)

345/18.0kV (Y-Grounded/Delta)
X1 = 5.82% on 100.0 MVA base
X0 = 5.82% on 100.0 MVA base

Generators (three)

Machine Base = 100.0 MVA (18.0KV)
ST = Xd" = 0.05733
GT(2) = Xd" = 0.06473

The following Table 5 summarizes the incremental impacts for the area:

BUS NAME	NOM. KV	Pre-Project 3LG(A)	Pre-Project 1LG(A)	Post-Project 3LG(A)	Post-Project 1LG(A)	Incremental 3LG(A)	Incremental 1LG(A)
Bowie	345	0	0	9559.45	9848.96	9559.45	9848.96
WILLOW (POI)	345	7255.78	4486.02	10689	8793.42	3433.22	4307.4
GREENLEE	345	9062.3	6645.06	10505.9	7785.65	1443.6	1140.59
GREENLEEAEPO	345	8640.27	6338.03	9937.69	7347.01	1297.42	1008.98
WINCHESTER	345	10254	7481.83	11508.2	8419.73	1254.2	937.9
VAIL 1	345	10637.9	10134.1	11777.6	10861.1	1139.7	727
VAIL	138	24202.4	19557.4	25331.1	20100.7	1128.7	543.3
VL EXP CAP	345	14326.6	10904.4	15440.7	11368.9	1114.1	464.5
VAIL CAP	345	31849.8	35245.3	32841	36077.2	991.2	831.9
SOUTH	138	20385.5	19695.9	21350.9	20308.2	965.4	612.3
IRVINGTON	138	27487.7	29061.1	28228.7	29611.5	741	550.4
COPPER VERDE	345	6645.52	5073.18	7372.78	5630.37	727.26	557.19
SOUTH	345	9562.19	9989.07	10240.8	10485.3	678.61	496.23
SPRINGERVILL	345	20480.5	21241.1	20978.3	21602.4	497.8	361.3
ROBERT BILLS	138	16293.6	11760.2	16712.5	11916.3	418.9	156.1
WINCHESTER	230	9712.64	8647.1	10115.3	9071.05	402.66	423.95
BICKNELL	345	6590.4	5438.39	6979.62	5620.44	389.22	182.05
DREXEL	138	18129.3	15154.3	18494.8	15323.5	365.5	169.2
GREENLEE AEP	230	6330.04	5859.08	6693.74	6231.72	363.7	372.64
AEP MORENCI	230	6433.24	5719.28	6796.16	6047.65	362.92	328.37
APACHE-1	230	10808.9	10198.8	11150.9	10425.1	342	226.3
PD MORENCI	230	6081.39	5319.42	6415.48	5617.76	334.09	298.34
COPPER VERDE	230	6013.05	5449.54	6346.8	5775.6	333.75	326.06
FRISCO	230	6045.53	5320.7	6377.91	5622.9	332.38	302.2
22 nd STREET	138	18075.1	13472.3	18396.6	13590.9	321.5	118.6
EAST	138	17366.7	14116.9	17669.7	14251.1	303	134.2
HIDALGO PNM	345	7008.29	5660.35	7283.85	5826.01	275.56	165.66
LOS REALES	138	12586.1	8779.66	12826.8	8862.21	240.7	82.55
MIDVALE 138	138	12930.9	9660.97	13169.5	9749.8	238.6	88.83
PANTANO	138	13422.2	9664.46	13626.5	9736.28	204.3	71.82
NORTH EAST	138	16312	15153.3	16500.5	15261.5	188.5	108.2
VAIL 2	345	6588.04	5352.35	6755.2	5436.16	167.16	83.81
DEMOSS PETRE	138	16067.8	14889.9	16228.2	14981.4	160.4	91.5
SPANISH TRAL	138	10438.1	7244.02	10589.6	7294.39	151.5	50.37
ROBERTS	138	11141.4	6869.64	11291.5	6908.48	150.1	38.84
LUNA PNM	345	10342.8	11044.3	10492.5	11161.2	149.7	116.9
SANTA CRUZ	138	14127.3	11435.6	14268	11496.7	140.7	61.1
DOSCONDADO	230	4795.85	4278.86	4930.81	4364.35	134.96	85.49
REDTAIL	230	5816.58	4789.88	5950.38	4856.9	133.8	67.02
SNYDER	138	12138.9	8764.87	12271.2	8810.98	132.3	46.11
CORNADO	345	14172.8	12471.4	14300	12537.1	127.2	65.7
SN BAY T2/T3	138	11799.4	8586.94	11924.4	8631.21	125	44.27
BUTTERFIELD	230	6350.38	5318.99	6475.36	5380.6	124.98	61.61
BICKNELL	230	5339.25	5461.32	5462.32	5549.51	123.07	88.19
APACHE-2	115	13231.2	14036.9	13346.6	14129.1	115.4	92.2
NORTH A	138	16909.2	12955.6	17017.8	12997.6	108.6	42

NORTH B	138	16604.2	12835.9	16707.1	12876.5	102.9	40.6
	NOM.	**Pre-Project**		**Post-Project**		**Incremental**	
BUS NAME	**KV**	**3LG(A)**	**1LG(A)**	**3LG(A)**	**1LG(A)**	**3LG(A)**	**1LG(A)**
RILLITO	138	13610.1	10334	13704.2	10369.9	94.1	35.9
SAHUARITA	230	4727.8	4345.33	4818.62	4397.57	90.82	52.24
TUCSON	138	11523.7	9821.57	11613.4	9864.87	89.7	43.3
AS &R MISSN	138	7202.28	6427.81	7289.28	6482.73	87	54.92
HIDALGO PNM	115	8140.36	9448.14	8225.12	9535.04	84.76	86.9
PANTANO	230	4574.44	4067.88	4648.97	4107.91	74.53	40.03
GREEN VALLEY	138	5482.86	3245.52	5550.18	3261.63	67.32	16.11
TORT PHSFTR	138	19676.7	21408.6	19742.6	21460.4	65.9	51.8
TORTOLITA	138	19705.5	21461.1	19771.3	21513	65.8	51.9
CYPRUS	138	6175.54	6366.53	6238.61	6411.3	63.07	44.77
WEST INA	138	11559	8972.8	11622	8997.93	63	25.13
SAGUARO	138	19270.1	20679.3	19333	20727.4	62.9	48.1
DEL CERRO	138	10669.7	8240.32	10730.2	8264.24	60.5	23.92
LACANADA	138	10443.8	6926.24	10492	6940.25	48.2	14.01
SAG 138 #1	138	16209.3	15648.4	16253.7	15675.6	44.4	27.2
SAG 138 #2	138	16209.3	15648.4	16253.7	15675.6	44.4	27.2
BICKNELL	115	5202.61	5694.5	5244.47	5728.45	41.86	33.95
MCKINLEY	345	13175.4	6918.01	13216.2	6925.74	40.8	7.73
MILL SITE 1	115	4960.01	5214.26	4998.08	5242.78	38.07	28.52
OXIDE MILL	115	4960.02	5214.27	4998.09	5242.79	38.07	28.52
CORNADO	525	12251	12388.6	12288.3	12414.1	37.3	25.5
LUNA PNM	115	9403.78	11108.3	9438.04	11140.5	34.26	32.2
SAGUARO	115	37648.8	43028.1	37682.8	43057.7	34	29.6
RANC VISTOSO	138	9253.85	6091.51	9286.94	6100.97	33.09	9.46
MILL SITE 2	115	4509.98	4412.57	4541.49	4433.05	31.51	20.48
SAN JUAN	345	34158.6	36286.8	34187.1	36308.3	28.5	21.5
WEST WING	345	12025.9	5878.17	12053	5882.58	27.1	4.41
SAN RAFAEL	230	2998.6	2626.6	3025.57	2640.62	26.97	14.02

MITIGATION PLAN

Provided below (See Table 6) is the recommended corrective mitigation plan for the identified transmission facility overload solely due to the addition of the Bowie project. For the existing overloads exacerbated with the addition of the Bowie Project, the Bowie Project could be included in the existing mitigation plan or be made to participate in any new mitigation plan designed for such an overload.

Worst Outage	Overloaded Facility	Applicable Rating	Pre-Project Loading (%)	Post-Project Loading (%)	Post-Project with Mitigation Loading (%)	Recommended Mitigation
		N-0				
ALL LINES IN SERVICE	MCKINLEY-YAHTAHEY 345/138 KV TRANSFORMER	200 MVA	72	100.3	N/A	Marginal overload. Reduced Bowie output as necessary
		N-1 Outage				
WINCHESTER –VAIL 345 kV LINE	BUTERFLD-APACHE 230 kV LINE	924 A	94	116	99	Install SPS to trip one CT and the ST
	BICKNELL 345/230 KV TRANSFORMER	193 MVA	85	123	97	
WILLOW – WINCHSTR 345 KV LINE	COPPER VERDE 345/230 KV TRANSFORMER	224 MVA	111	131	108	Install SPS to trip the entire Bowie plant
		N-2				
GREENLEE-WILLOW 345 KV & WINCHSTR-VAIL 345 KV LINES	SLOAN – PANTANO 230 KV LINE	924 A	N/A	115	72	Install SPS to trip one CT and the ST.
	SLOAN – BUTERFLD 230 KV LINE	924 A	N/A	123	79	
	BICKNELL 345/230 KV TRANSFORMER	193 MVA	N/A	162	94	
	ADAMS – APACHE 115 KV LINE	663 A	N/A	121	86	
	BUERFLD – APACHE 230 KV LINE	924 A	N/A	143		
	WINCHSTR – APACHE 230 KV LINE	1210 A	N/A	106	24	
	WINCHSTR 345/230 KV TRANSFORMER	420 MVA	N/A	119	27	
	SAHUARIT – PATANO 230 KV LINE	924 A	N/A	104	62	
SPRINGVL – VAIL2 345 KV & WINCHSTR-VAIL 345 KV LINES	BUERFLD – APACHE 230 KV LINE	924 A	99	122	96	Install SPS to trip the entire Bowie plant
	BICKNELL 345/230 KV TRANSFORMER	193 MVA	99	135	93	
	ADAMS – APACHE 115 KV LINE	663 A	87	103	84	
	SLOAN – BUTERFLD 230 KV LINE	924 A	80	103	77	

Table 6: Recommended Corrective Mitigation Plan

Appendix A

Power Flow Maps

Section 1: 2010 Light Autumn Pre-Project Base Case-Power Flow Map (All Lines in Service)

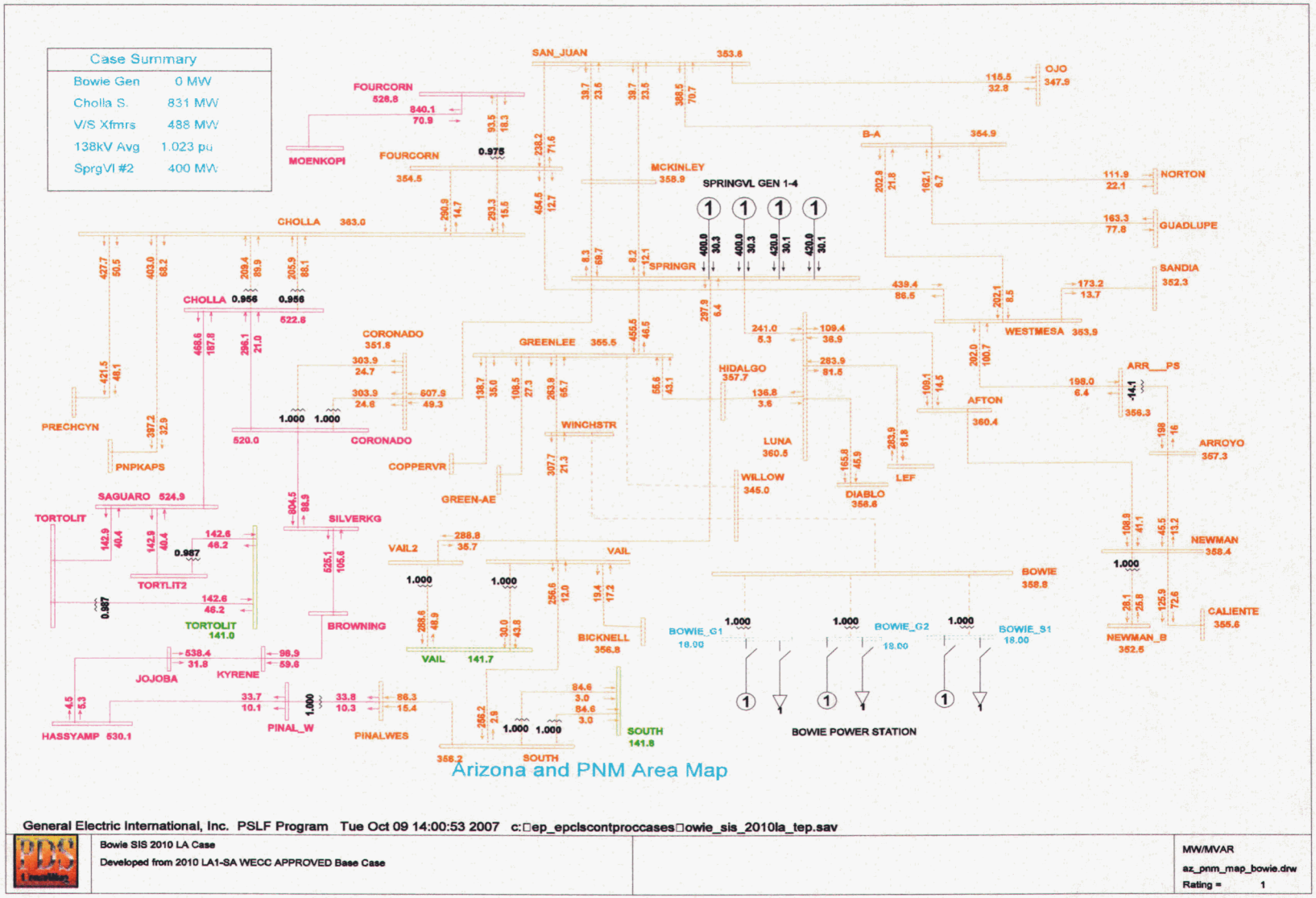

Section 2: 2010 Light Autumn Post-Project Base Case- Power Flow Map (All Lines in Service)

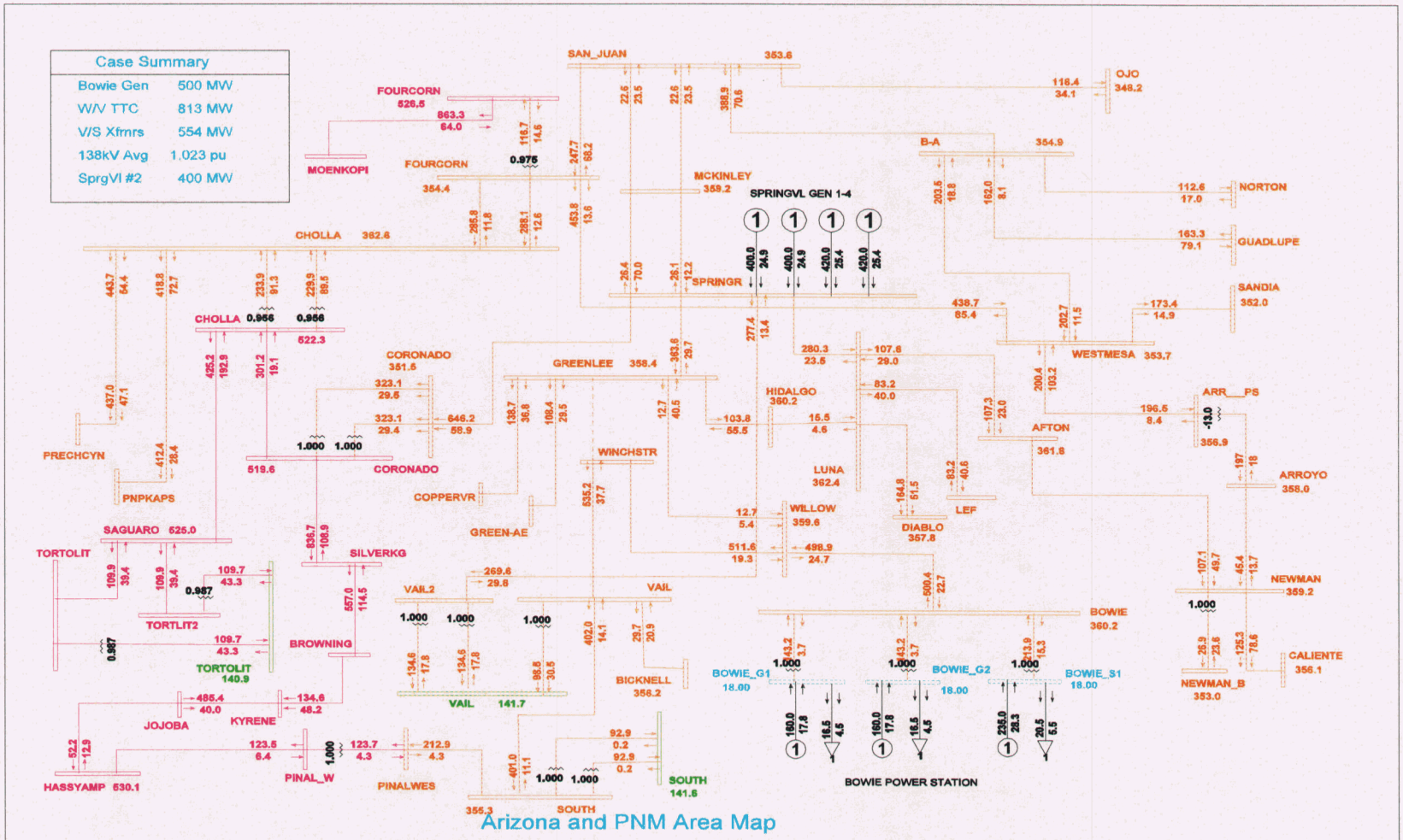

Section 3: Difference Power Flow Map between 2010 Light Autumn Pre- and Post Project Base Cases

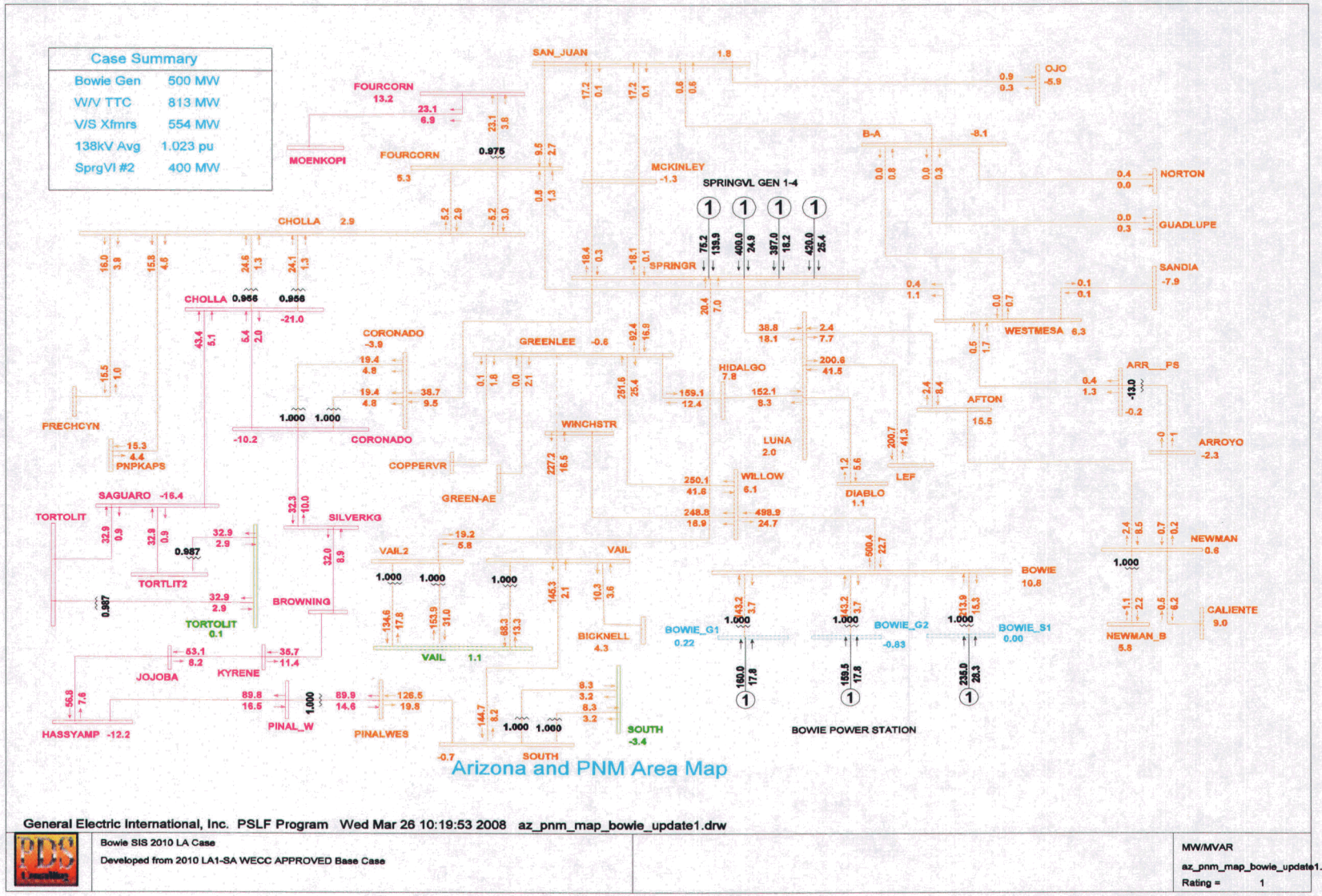

Section 4: 2010 Heavy Summer Pre-Project Base Case-Power Flow Map (All Lines in Service)

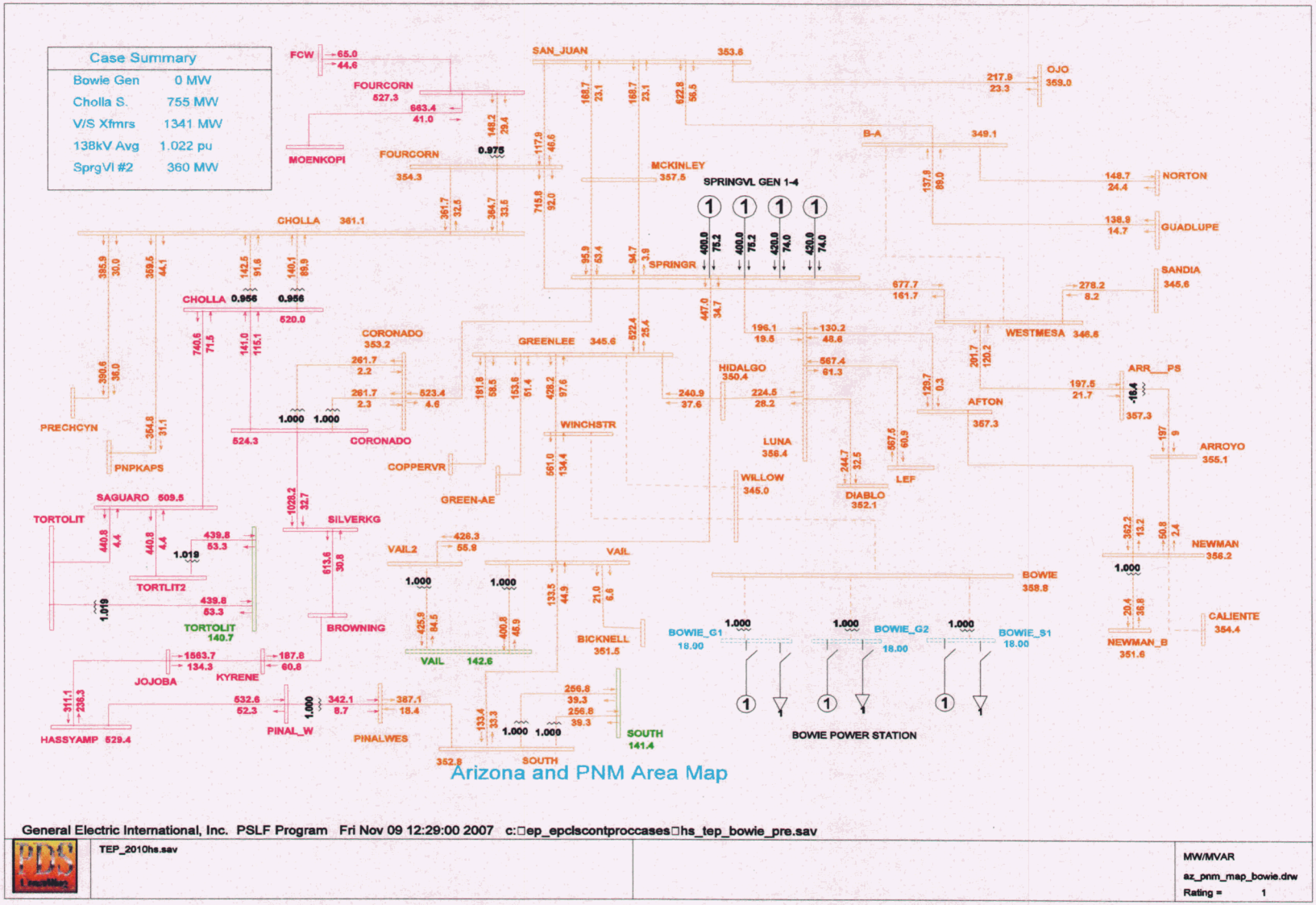

Section 5: 2010 Heavy Summer Post-Project Base Case-Power Flow Map (All Lines in Service)

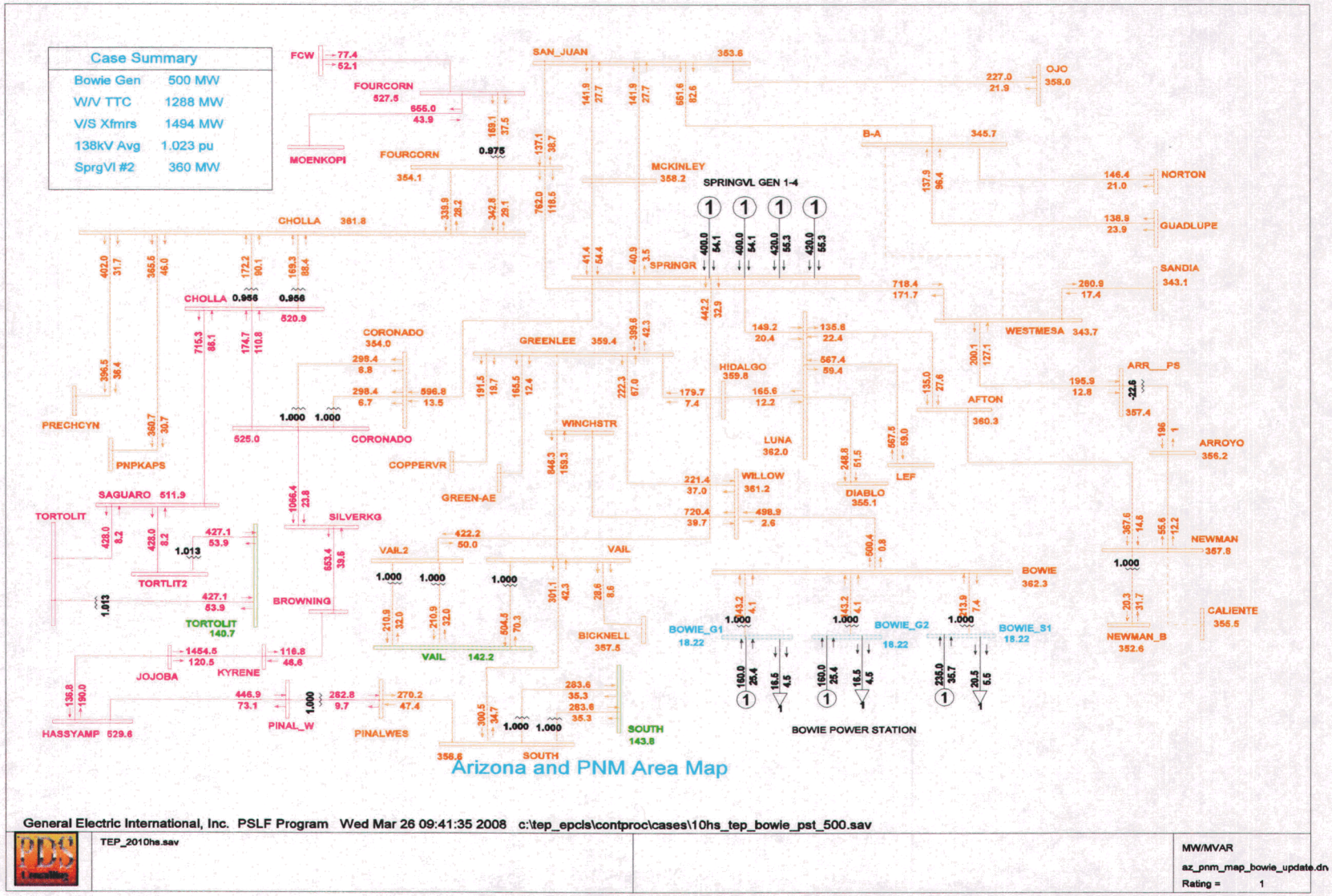

Section 6: Difference Power Flow Map between 2010 Heavy Summer Pre- and Post Project Base Cases

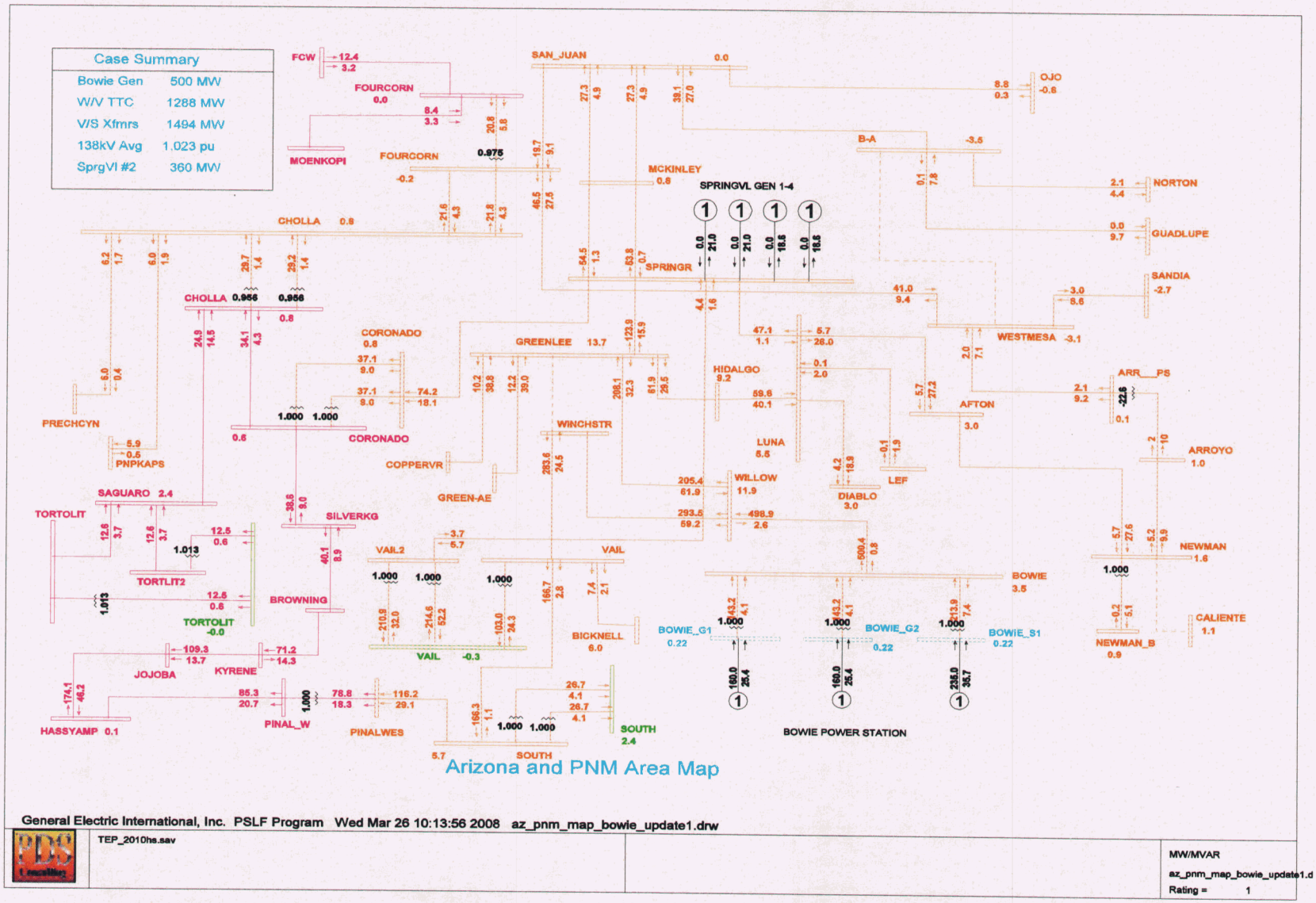

Appendix B

Summary of Power Flow Analysis Results

Table B1: Summary of Power Flow Study Results for 2010 Light Autumn Base Case

Worst Outage Element	Overloaded Facility	Applicable Rating	Pre-Project Loading (%)	Post-Project Loading (%)	Comments
Category A—Normal Overloads					
ALL LINES IN SERVICE	SHIPROCK 345/230 KV TRANSFORMER	300 MVA	103	106	Pre-project overload exacerbated with addition of proposed project
	BUCKBLVD-BLYTHE 161 KV LINE	1434 A	107	107	Overload not due to addition of proposed project
Category B Contingencies					
GREEN-AE – GREENLEE 345 KV LINE	COPPERVR 345/230 KV TRANSFORMER	224 MVA	104	104	Pre-project overload persisted with addition of proposed project
GREENLEE – COPPERVR 345 KV LINE	GREEN-AE 345/230 KV TRANSFORMER	193 MVA	119	119	
Category C/D Contingencies					
GREEN-AE – GREENLEE 345 KV & GREENLEE – WINCHSTR 345 KV LINES	COPPERVR 345/230 KV TRANSFORMER	224 MVA	135	N/A	Several other outages caused the monitored facility to overload. See Attachment A.
GREEN-AE – GREENLEE 345 KV & GREENLEE – WILLOW 345 KV LINES	COPPERVR 345/230 KV TRANSFORMER	224 MVA	N/A	163	
SPRINGR – CORONADO 345 KV & WINCHSTR – WILLOW 345 KV LINES	GREEN-AE 345/230 KV TRANSFORMER	193 MVA	N/A	146-	
GREENLEE-WILLOW 345 KV & WINCHSTR-VAIL 345 KV LINES	WINCHSTR-APACHE 230 KV LINE	1210 A	N/A	104	Overloads due to the addition of the Bowie Project. Overloads mitigated by tripping the entire Bowie plant.
	WINCHSTR 345/230 KV TRANSFORMER	420 MVA	N/A	118	
	BICKNELL 345/230 KV TRANSFORMER	193 MVA	N/A	109	

Table B2: Summary of Power Flow Study Results for 2010 Heavy Summer Base Case

Worst Outage Element	Overloaded Facility	Applicable Rating	Pre-Project Loading (%)	Post-Project Loading (%)	Comments
Category A- Normal Overloads					
ALL LINES IN SERVICE	MCKINLEY-YAHTAHEY 345/115 KV TRANSFORMER	200 MVA	72	100.3	Marginal overload due to the addition of the project
Category B Contingencies					
GREEN-AE – GREENLEE 345 KV LINE	COPPERVR 345/230 KV TRANSFORMER	224 MVA	166	144	Pre-project overload reduced with the addition of Bowie
WILLOW (GREENLEE) – WINCHSTR 345 KV LINE	COPPERVR 345/230 KV TRANSFORMER	224 MVA	111	131	Pre-project overload exacerbated with addition of Bowie
GREENLEE – COPPERVR 345 KV LINE	GREEN-AE 345/230 KV TRANSFORMER	193 MVA	143	166	Pre-project overload exacerbated with addition of Bowie
PINALWES – SOUTH 345 KV LINE	AVRA – SANDARIO 115 KV LINE	396 A	111	<100	Pre-project overload mitigated by addition of Bowie
WINCHSTR - VAIL 345 KV LINE	BUTERFLD – APACHE 230 KV LINE	924 A	<100	116	Overload due to the addition of the Bowie
	BICKNELL 345/230 KV TRANSFORMER	193 MVA	<100	123	
Category C/D Contingencies					
PINALWES –SOUTH 345 KV & SPRINGR – GREENLEE 345 KV (WINCHSTR-WILLOW 345 kV) LINES	SANDARIO-THREEPNT 115 KV LINE	396 A	109	104	Several other outages caused the monitored facility to overload. See Attachment B for the detailed results
	SANDARIO-AVRA 115 KV LINE	396 A	147	143	
	MARANA – SAG.EAST 115 KV LINE	924 A	113	106	

Table B2: Summary of Power Flow Study Results for 2010 Heavy Summer Base Case (CONTINUED)

Worst Outage Element	Overloaded Facility	Applicable Rating	Pre-Project Loading (%)	Post-Project Loading (%)	Comments
Category C/D Contingencies					
GREENLEE – WINCHSTR 345 KV LINE & VAIL2 345/138 KV TRANSFORMER	GREEN-AE 345/230 KV TRANSFORMER	193 MVA	186	<100	Several other outages caused the monitored facility to overload. See Attachment B for the detailed results
WINCHSTR-WILLOW 345 KV LINE & SPRINGR-CORONADO 345 KV LINE	GREEN-AE 345/230 KV TRANSFORMER	193 MVA	N/A	228	
WINCHSTR-VAIL 345 KV LINE & VAIL2 345/138 KV TRANSFORMER	BUERFLD – APACHE 230 KV LINE	924 A	116	<100	
GREENLEE – WILLOW 345 KV LINE & WINCHSTR - VAIL 345/138 KV LINES	BUERFLD – APACHE 230 KV LINE	924 A	<100	143	
PINALWES - SOUTH 345 KV & WINCHSTR – VAIL 345 KV LINES	BICKNELL 345/230 KV TRANSFORMER	193 MVA	137	177	
GREEN-AE – GREENLEE 345 KV & GREENLEE – WINCHSTR (WILLOW – WINCHSTR 345 KV) 345 KV LINES	COPPERVR 345/230 KV TRANSFORMER	224 MVA	193	229	
CHOLLA – SAGUARO 500 KV LINE & VAIL2 345/138 KV TRANSFORMER	VAIL 345/138 KV TRANSFORMER	806 MVA	103	<100	
PINALWES - SOUTH 345 KV (GREENLEE – WILLOW 345 KV) & WINCHSTR – VAIL 345 KV LINES	APACHE – ADAMS 115 KV LINE	663 A	102	121	Nine (9) other outages caused the monitored facility to overload in the post-project base case. See Attachment B.
CHOOLA – SAGUARO 500 KV & PINALWES – SOUTH 345 KV LINES	SAGUARO – SAG.EAST 230/115 KV TRANSFOREMER	200 MVA	113	<100	Pre-project overload mitigated by the addition of the project.
	SAGUARO – SAG.WEST 230/115 KV TRANSFOREMER	200 MVA	113	<100	

Table B3: Summary of Power Flow Study Results for 2010 Heavy Summer Base Case (CONTINUED)

Worst Outage Element	Overloaded Facility	Applicable Rating	Pre-Project Loading (%)	Post-Project Loading (%)	Comments
Category C/D Contingencies					
GREENLEE – WILLOW 345 KV & WINCHSTR – VAIL 345 KV LINES	SLOAN – PANTANO 230 KV LINE	924 A	N/A	115	Several other outages caused the monitored facility to overload in the post-project base case. See Attachment B.
	SLOAN – BUTERFLD 230 KV LINE	924 A	N/A	123	
	BICKNELL 345/230 KV TRANSFORMER	193 MVA	<100	162	
	ADAMS – APACHE 115 KV LINE	663 A	N/A	121	
	BUERFLD – APACHE 230 KV LINE	924 A	N/A	143	
	WINCHSTR – APACHE 230 KV LINE	1210 A	N/A	106	
	WINCHSTR 345/230 KV TRANSFORMER	420 MVA	N/A	119	
	SAHUARIT – PATANO 230 KV LINE	924 A	N/A	104	
GREEN-AE – GREENLEE 345 KV & WINCHSTR-WILLOW 345 KV LINES	FRISCO – COPPERVR 230 KV LINE	1255 A	N/A	101	
	COPPERVR 345/230 KV TRANSFORMER	224 MVA	N/A	230	
SPRINGVL – VAIL2 345 KV & WINCHSTR-VAIL 345 KV LINES	BUERFLD – APACHE 230 KV LINE	924 A	<100	122	Post-project overload mitigated by tripping the entire Bowie plant
	BICKNELL 345/230 KV TRANSFORMER	193 MVA	<100	135	
	ADAMS – APACHE 115 KV LINE	663 A	<100	103	
	SLOAN – BUTERFLD 230 KV LINE	924 A	<100	103	

Appendix C

2010 Heavy Summer—Difference in Load Shed

Table C1: 2010 Heavy Summer-Difference in Load Shed

2010 HEAVY SUMMER POWER FLOW ANALYSIS								
OUTAGES						PRE-PROJECT LOAD SHED (MW)	POST-PROJECT LOAD SHED (MW)	INCREASE IN LOAD SHED
FROM	TO	CK	FROM	TO	CK			
CHOLLA 500	SAGUARO 500	1	MCKINLEY 345	YAHTAHEY 115	1	0	800	800
PINALWES 345	SOUTH 345	1	MCKINLEY 345	YAHTAHEY 115	1	0	680	680
SPRINGR 345	VAIL2 346	1	MCKINLEY 345	YAHTAHEY 115	1	0	560	560
SPRINGR 345	VAIL2 345	1	VAIL 345	SOUTH 345	1	0	520	520
SAGUARO 500	TORTLIT2 500	1	MCKINLEY 345	YAHTAHEY 115	1	0	480	480
SAGUARO 500	TORTOLIT 500	1	MCKINLEY 345	YAHTAHEY 115	1	0	480	480
SAN_JUAN 345	MCKINLEY 345	1	MCKINLEY 345	YAHTAHEY 115	1	0	480	480
MCKINLEY 345	SPRINGR 345	1	MCKINLEY 345	YAHTAHEY 115	1	0	460	460
BICKNELL 345	VAIL 345	1	MCKINLEY 345	YAHTAHEY 115	1	0	440	440
SPRINGR 345	VAIL2 345	1	VAIL 345	VAIL 138	1	440	800	360
GREENLEE 345	COPPERVR 345	1	MCKINLEY 345	YAHTAHEY 115	1	0	320	320
GREEN-AE 345	GREENLEE 345	1	MCKINLEY 345	YAHTAHEY 115	1	0	300	300
PINALWES 345	SOUTH 345	1	VAIL 345	SOUTH 345	1	0	300	300
CHOLLA 500	SAGUARO 500	1	SPRINGR 345	VAIL2 345	1	180	460	280
CHOLLA 500	SAGUARO 500	1	VAIL 345	VAIL 138	1	220	460	240
GREEN-AE 345	GREENLEE 345	1	GREENLEE 345	HILDALGO 345	1	0	240	240
SPRINGR 345	CORONADO 345	1	SPRINGR 345	VAIL2 345	1	0	180	180
SAGUARO 500	TORTLIT2 500	1	TORTOLIT 138	TORTOLIT 500	1	460	580	120
SAGUARO 500	TORTOLIT 500	1	TORTOLIT 138	TORTLIT2 500	1	460	580	120
TORTOLIT 138	TORTLIT2 500	1	TORTOLIT 138	TORTOLIT 500	1	460	580	120
CHOLLA 500	SAGUARO 500	1	VAIL 345	SOUTH 345	1	0	100	100
SPRINGR 346	VAIL2 346	1	SOUTH 345	SOUTH 138	1	0	100	100
SAGUARO 500	TORTLIT2 500	1	WINCHSTR 345	VAIL 345	1	300	380	80
SAGUARO 500	TORTOLIT 500	1	WINCHSTR 345	VAIL 345	1	300	380	80
SPRINGR 345	CORONADO 345	1	VAIL 345	SOUTH 345	1	0	80	80
SPRINGR 345	CORONADO 345	1	VAIL 345	VAIL 138	1	0	80	80
WINCHSTR 345	VAIL 345	1	TORTOLIT 138	TORTLIT2 500	1	300	380	80
WINCHSTR 345	VAIL 345	1	TORTOLIT 138	TORTOLIT 500	1	300	380	80
SOUTH 345	SOUTH 138	1	SOUTH 345	SOUTH 138	2	60	140	80
SAGUARO 500	TORTLIT2 500	1	WINCHSTR 345	WILLOW 345	1	200	260	60
SAGUARO 500	TORTOLIT 500	1	WINCHSTR 345	WILLOW 345	1	200	260	60
GREENLEE 345	COPPERVR 345	1	VAIL 345	VAIL 138	1	0	60	60
SPRINGR 345	VAIL2 345	1	WINCHSTR 345	VAIL 345	1	640	680	40
GREENLEE 345	COPPERVR 345	1	SPRINGR 345	VAIL2 345	1	0	20	20
SAGUARO 500	TORTLIT2 500	1	VAIL 345	VAIL 138	1	220	220	0
SAGUARO 500	TORTOLIT 500	1	VAIL 345	VAIL 138	1	220	220	0
GREENLEE 345	COPPERVR 345	1	GREENLEE 345	HILDALGO 345	1	0	0	0
GREENLEE 345	COPPERVR 345	1	VAIL 345	SOUTH 345	1	40	40	0
VAIL 345	VAIL 138	1	TORTOLIT 138	TORTLIT2 500	1	220	220	0
VAIL 345	VAIL 138	1	TORTOLIT 138	TORTOLIT 500	1	220	220	0
SAGUARO 500	TORTLIT2 500	1	SPRINGR 345	SPR GEN1 19	1	40	20	-20
SAGUARO 500	TORTLIT2 500	1	SPRINGR 345	SPR GEN2 19	1	40	20	-20
SAGUARO 500	TORTOLIT 500	1	WESTWING 345	PINALWES 345	1	40	20	-20
GREENLEE 345	COPPERVR 345	1	GREENLEE 345	WILLOW 345	1	20	0	-20
GREENLEE 345	COPPERVR 345	1	WESTWING 500	WESTWING 345	1	20	0	-20
PINALWES 345	SOUTH 345	1	SPRINGR 345	SPR GEN1 19	1	20	0	-20
SAGUARO 500	TORTLIT2 500	1	SPRINGR 345	LUNA 345	1	40	0	-40
SAGUARO 500	TORTLIT2 500	1	SOUTH 345	SOUTH 138	1	40	0	-40
SAGUARO 500	TORTLIT2 500	1	SOUTH 345	SOUTH 138	2	40	0	-40
SAGUARO 500	TORTLIT2 500	1	SPRINGR 345	SPR GEN3 21	1	40	0	-40
SAGUARO 500	TORTLIT2 500	1	SPRINGR 345	SPR GEN4 21	1	40	0	-40
SAGUARO 500	TORTLIT2 500	1	WINCHSTR 345	WINCHSTR 230	1	40	0	-40
SAGUARO 500	TORTOLIT 500	1	SPRINGR 345	LUNA 345	1	40	0	-40
SAGUARO 500	TORTOLIT 500	1	SOUTH 345	SOUTH 138	1	40	0	-40

Table C1: 2010 Heavy Summer-Difference in Load Shed (Continued)

2010 HEAVY SUMMER POWER FLOW ANALYSIS								
OUTAGES						PRE-PROJECT LOAD SHED (MW)	POST-PROJECT LOAD SHED (MW)	INCREASE IN LOAD SHED
FROM	TO	CK	FROM	TO	CK			
SAGUARO 500	TORTOLIT 500	1	SOUTH 345	SOUTH 138	2	40	0	-40
SAGUARO 500	TORTOLIT 500	1	SPRINGR 345	SPR GEN1 19	1	40	0	-40
SAGUARO 500	TORTOLIT 500	1	SPRINGR 345	SPR GEN2 19	1	40	0	-40
SAGUARO 500	TORTOLIT 500	1	SPRINGR 345	SPR GEN3 21	1	40	0	-40
SAGUARO 500	TORTOLIT 500	1	SPRINGR 345	SPR GEN4 21	1	40	0	-40
GREEN-AE 345	GREENLEE 345	1	SPRINGR 345	GREENLEE 345	1	60	20	-40
PINALWES 345	SOUTH 345	1	WINCHSTR 345	VAIL 345	1	220	180	-40
SPRINGR 345	LUNA 345	1	TORTOLIT 138	TORTLIT2 500	1	40	0	-40
SPRINGR 345	LUNA 345	1	TORTOLIT 138	TORTOLIT 500	1	40	0	-40
SOUTH 345	SOUTH 138	1	TORTOLIT 138	TORTLIT2 500	1	40	0	-40
SOUTH 345	SOUTH 138	1	TORTOLIT 138	TORTOLIT 500	1	40	0	-40
SOUTH 345	SOUTH 138	2	TORTOLIT 138	TORTLIT2 500	1	40	0	-40
SOUTH 345	SOUTH 138	2	TORTOLIT 138	TORTOLIT 500	1	40	0	-40
SPRINGR 345	SPR GEN1 19	1	TORTOLIT 138	TORTLIT2 500	1	40	0	-40
SPRINGR 345	SPR GEN1 19	1	TORTOLIT 138	TORTOLIT 500	1	40	0	-40
SPRINGR 345	SPR GEN2 19	1	TORTOLIT 138	TORTLIT2 500	1	40	0	-40
SPRINGR 345	SPR GEN2 19	1	TORTOLIT 138	TORTOLIT 500	1	40	0	-40
SPRINGR 345	SPR GEN3 21	1	TORTOLIT 138	TORTLIT2 500	1	40	0	-40
SPRINGR 345	SPR GEN3 21	1	TORTOLIT 138	TORTOLIT 500	1	40	0	-40
SPRINGR 345	SPR GEN4 21	1	TORTOLIT 138	TORTLIT2 500	1	40	0	-40
SPRINGR 345	SPR GEN4 21	1	TORTOLIT 138	TORTOLIT 500	1	40	0	-40
WINCHSTR 345	WINCHSTR 230	1	TORTOLIT 138	TORTLIT2 500	1	40	0	-40
SAGUARO 500	TORTLIT2 500	1	SPRINGR 345	VAIL2 345	1	300	240	-60
SAGUARO 500	TORTOLIT 500	1	SPRINGR 345	VAIL2 345	1	300	240	-60
SAGUARO 500	TORTOLIT 500	1	WINCHSTR 345	WINCHSTR 230	1	60	0	-60
GREENLEE 345	WILLOW 345	1	PINALWES 345	SOUTH 345	1	60	0	-60
HIDALGO 345	GREENLEE 345	1	TORTOLIT 138	TORTLIT2 500	1	80	20	-60
SPRINGR 345	VAIL2 345	1	WINCHSTR 345	WILLOW 345	1	640	580	-60
SPRINGR 345	VAIL2 345	1	TORTOLIT 138	TORTLIT2 500	1	300	240	-60
SPRINGR 345	VAIL2 345	1	TORTOLIT 138	TORTOLIT 500	1	300	240	-60
WINCHSTR 345	WINCHSTR 230	1	TORTOLIT 138	TORTOLIT 500	1	60	0	-60
SAGUARO 500	TORTLIT2 500	1	HIDALGO 345	GREENLEE 345	1	80	0	-80
SAGUARO 500	TORTLIT2 500	1	PINAL_W 500	PINALWES 345	1	120	40	-80
SAGUARO 500	TORTOLIT 500	1	HIDALGO 345	GREENLEE 345	1	80	0	-80
SAGUARO 500	TORTOLIT 500	1	PINAL_W 500	PINALWES 345	1	120	40	-80
HIDALGO 345	GREENLEE 345	1	TORTOLIT 138	TORTOLIT 500	1	80	0	-80
PINAL_W 500	PINALWES 345	1	TORTOLIT 138	TORTLIT2 500	1	120	40	-80
PINAL_W 500	PINALWES 345	1	TORTOLIT 138	TORTOLIT 500	1	120	40	-80
WINCHSTR 345	VAIL 345	1	VAIL2 345	VAIL 138	1	100	0	-100
SAGUARO 500	TORTLIT2 500	1	SPRINGR 345	GREENLEE 345	1	200	80	-120
SAGUARO 500	TORTOLIT 500	1	SPRINGR 345	GREENLEE 345	1	200	80	-120
SPRINGR 345	GREENLEE 345	1	SPRINGR 345	SPR GEN4 21	1	120	0	-120
SPRINGR 345	GREENLEE 345	1	TORTOLIT 138	TORTLIT2 500	1	200	80	-120
SPRINGR 345	GREENLEE 345	1	TORTOLIT 138	TORTOLIT 500	1	200	80	-120
SAGUARO 500	TORTLIT2 500	1	PINALWES 345	SOUTH 345	1	300	160	-140
SAGUARO 500	TORTOLIT 500	1	PINALWES 345	SOUTH 345	1	300	160	-140
GREEN-AE 345	GREENLEE 345	1	GREENLEE 345	COPPERVR 345	1	140	0	-140
PINALWES 345	SOUTH 345	1	VAIL2 345	VAIL 138	1	140	0	-140
PINALWES 345	SOUTH 345	1	TORTOLIT 138	TORTLIT2 500	1	300	160	-140
PINALWES 345	SOUTH 345	1	TORTOLIT 138	TORTOLIT 500	1	300	160	-140
CHOLLA 500	SAGUARO 500	1	VAIL2 345	VAIL 138	1	180	0	-180
SAGUARO 500	TORTLIT2 500	1	GREENLEE 345	WILLOW 345	1	200	20	-180
SAGUARO 500	TORTOLIT 500	1	GREENLEE 345	WILLOW 345	1	200	20	-180
GREENLEE 345	WILLOW 345	1	TORTOLIT 138	TORTLIT2 500	1	200	20	-180

Table C1: 2010 Heavy Summer-Difference in Load Shed (Continued)

2010 HEAVY SUMMER POWER FLOW ANALYSIS								
OUTAGES						PRE-PROJECT LOAD SHED (MW)	POST-PROJECT LOAD SHED (MW)	INCREASE IN LOAD SHED
FROM	TO	CK	FROM	TO	CK			
GREENLEE 345	WILLOW 345	1	TORTOLIT 138	TORTOLIT 500	1	200	20	-180
GREENLEE 345	WILLOW 345	1	SPRINGR 345	GREENLEE 345	1	220	0	-220
PINALWES 345	SOUTH 345	1	WESTWING 345	PINALWES 345	1	240	20	-220
PINALWES 345	SOUTH 345	1	SOUTH 345	SOUTH 138	2	220	0	-220
WESTWING 345	PINALWES 345	1	PINAL_W 500	PINALWES 345	1	240	0	-240
SAGUARO 500	TORTLIT2 500	1	SAGUARO 500	TORTOLIT 500	1	1058	780	-278
SAGUARO 500	TORTLIT2 500	1	VAIL2 345	VAIL 138	1	300	0	-300
SAGUARO 500	TORTOLIT 500	1	VAIL2 345	VAIL 138	1	300	0	-300
VAIL2 345	VAIL 138	1	TORTOLIT 138	TORTLIT2 500	1	300	0	-300
VAIL2 345	VAIL 138	1	TORTOLIT 138	TORTOLIT 500	1	300	0	-300
VAIL 345	VAIL 138	1	VAIL2 345	VAIL 138	1	440	0	-440
GREENLEE 345	WILLOW 345	1	SPRINGR 345	VAIL2 345	1	640	0	-640
SPRINGR 345	GREENLEE 345	1	SPRINGR 345	VAIL2 345	1	740	80	-660

Appendix D

Transient Stability Contingency List

SINGLE OUTAGES

1. NO FAULT (ALIS)
2. 4-CYL 3-PH FAULT AT GREENLEE 345 KV, GREENLEE-HILDALDO 345 KV LINE OUTAGE (GL_3_GLHI)
3. 4-CYL, 3-PH FAULT AT GREENLEE 345 KV, GREENLEE- WINCHSTR 345 KV LINE OUTAGE (GL_3_GLWN)
4. 4-CYL, 3-PH FAULT AT GREENLEE 345 KV, GREENLEE-SPRINGR 345 KV LINE OUTAGE (GL_3_SPGL)
5. 4-CYL, 3-PH FAULT AT MCKINLEY 345 KV, MCHINLEY-SPRINGR 345 KV LINE OUTAGE (MK_3_MKSP)
6. 4-CYL, 3-PH FAULT AT MCKINLEY 345 KV, MCHINLEY-YAHTAHEY 345/115 KV TRANSFORMER OUTAGE (MK_3_MKYA)
7. 4-CYL, 3-PH FAULT AT MCKINLEY 345 KV, MCHINLEY-SAN_JUAN 345 KV LINE OUTAGE (MK_3_SJMK)
8. 4-CYL, 3-PH FAULT AT PINAL WEST 345 KV, PINAL WEST-SOUTH 345 KV LINE OUTAGE (PW_3_PWSO)
9. 4-CYL, 3-PH FAULT AT PINAL WEST 345 KV, PINAL WEST 345/500 KV TRANSFORMER OUTAGE (PW_3_PWT1)
10. 4-CYL, 3-PH FAULT AT PINAL WEST 345 KV, PINAL WEST-WESTWING 345 KV LINE OUTAGE (PW_3_WWPW)
11. 4-CYL, 3-PH FAULT AT SAGUARO 500 KV, CHOLLA-SAGUARO 500 KV LINE OUTAGE (SA_3_CHSA)
12. 4-CYL, 3-PH FAULT AT SAGUARO 500 KV, SAGUARO-TORTOLITA 500 KV LINE OUTAGE (SA_3_SATO)
13. 4-CYL, 3-PH FAULT AT SOUTH 345 KV, SOUTH-PINAL WEST 345 KV LINE OUTAGE (SO_3_PWSO)
14. 4-CYL, 3-PH FAULT AT SOUTH 345 KV, SOUTH 345/138 KV TRANSFORMER OUTAGE (SO_3_SOT2)
15. 4-CYL, 3-PH FAULT AT SOUTH 345 KV, SOUTH-VAIL 345 KV LINE OUTAGE (SO_3_VLSO)
16. 4-CYL, 3-PH FAULT AT SOUTH 345 KV, SOUTH-WESTWING 345 KV LINE OUTAGE (SO_3_WWSO)
17. 4-CYL, 3-PH FAULT AT SPRINGERVILLE 345 KV, SPRINGR GEN UNIT 1 OUTAGE (SP_3_SP1_trip)
18. 4-CYL, 3-PH FAULT AT SPRINGERVILLE 345 KV, SPRINGR-CORONADO 345 KV LINE OUTAGE (SP_3_SPCO)
19. 4-CYL, 3-PH FAULT AT SPRINGERVILLE 345 KV, SPRINGR-GREENLEE 345 KV LINE OUTAGE (SP_3_SPGL)
20. 4-CYL, 3-PH FAULT AT SPRINGERVILLE 345 KV, SPRINGR –LUNA 345 KV LINE OUTAGE (SP_3_SPLU)
21. 4-CYL, 3-PH FAULT AT SPRINGERVILLE 345 KV, SPRINGR-MCKINLEY 345 KV LINE OUTAGE (SP_3_SPMK)
22. 4-CYL, 3-PH FAULT AT SPRINGERVILLE 345 KV, SPRINGR-VIAL2 345 KV LINE OUTAGE (SP_3_SPVL)
23. 4-CYL, 3-PH FAULT AT VAIL2 345 KV, SPRINGR –VAIL2 345 KV LINE OUTAGE (VL2_3_SPVL)
24. 4-CYL, 3-PH FAULT AT VAIL 345 KV, VAIL-BICKNELL 345 KV LINE OUTAGE (VL_3_VLBI)
25. 4-CYL, 3-PH FAULT AT VAIL 345 KV, VAIL-SOUTH 345 KV LINE OUTAGE (VL_3_VLSO)
26. 4-CYL, 3-PH FAULT AT VAIL 345 KV, VAIL 345/138 KV TRANSFORMER OUTAGE (VL_3_VLT1)

27. 4-CYL, 3-PH FAULT AT VAIL 345 KV,VAIL-WINCHSTR 345 KV LINE OUTAGE (VL_3_WNVL)
28. 4-CYL, 3-PH FAULT AT WINCHESTER 345 KV, GREENLEE-WINCHSTR 345 KV LINE OUTAGE (WN_3_GLWN)
29. 4-CYL, 3-PH FAULT AT WINCHESTER 345 KV, WINCHSTR-VAIL 345 KV LINE (WN_3_WNVL)
30. 4-CYL, 3-PH FAULT AT WESTWING 345 KV, WESTWING-PINAL WEST 345 KV LINE (WW_3_WWPW)
31. 4-CYL, 3-PH FAULT AT WESTWING 345 KV, WESTWING-SOUTH 345 KV LINE (WW_3_WWSO)

MULTIPLE OUTAGES

32. CHOLLA-SAGUARO 500 KV LINE, SAGUARO-TORTOLIT 500 KV LINE & TORTOLIT 500/138 KV TRANSFORMER SIMULTANEOUS OUTAGE (CHSA_SATO_out)
33. 4-CYL, 3-PH FAULT AT GREENLEE 345 KV, GREENLEE-SPRINGR 345 KV LINE & GREENLEE-WINCHSTR 345 KV LINE SIMULTANEOUS OUTAGE (GL_3Fault_SPGLWN_out),
34. 5-CYL, 3-PH FAULT AT IRVINGTON 138 KV BUS, IRVINGTON 138 KV BUS OUTAGE (IRV_BUS)
35. 5-CYL, 3-PH FAULT AT NORTH LOOP 138 KV BUS, NORTH LOOP 138 KV BUS OUTAGE (NLOOP_BUS)
36. 4-CYL, 3-PH FAULT AT PINAL WEST 345 KV, PINAL WEST-SOUTH 345 KV LINE & PINAL WEST 500/345 KV TRANSFORMER SIMULTANEOUS OUTAGE (PW_3Fault_PWPWSO_out)
37. 4-CYL, 3-PH FAULT AT SAGUARO 500 KV, SAGUARO-TORTOLIT #1 &2 500 KV LINES OUTAGE (SA_3Fault_2SATO_out)
38. 4-CYL, 3-PH FAULT AT SOUTH 345 KV, SOUTH-PINAL WEST 345 KV LINE & SOUTH 345/138 KV TRANSFORMER SIMULTANEOUS OUTAGE (SO_3Fault_PWSOT2_out)
39. 4-CYL, 3-PH FAULT AT SOUTH 345 KV, SOUTH #1 & 2 345/138 KV TRANSFORMERS OUTAGE (SO_3Fault_SOT2T3_out)
40. 4-CYL, 3-PH FAULT AT SOUTH 345 KV, SOUTH-VAIL 345 KV LINE & SOUTH 345/138 KV TRANSFORMER SIUMLTANEOUS OUTAGE (SO_3Fault_VLSOT2_out)
41. 4-CYL, 3-PH FAULT AT SOUTH 345 KV, SOUTH-WESTWING 345 KV LINE & SOUTH 345/138 KV TRANSFORMER SIMULTANEOUS OUTAGE (SO_3Fault_WWSOT2_out)
42. 4-CYL, 3-PH FAULT AT SOUTH 345 KV, SOUTH-WESTWING 345 KV LINE & SOUTH – VAIL 345 KV LINE SIMULTANEOUS OUTAGE (SO_3Fault_WWSOVL_out)
43. 4-CYL, 3-PH FAULT AT SPRINGERVILLE 345 KV, SPRINGR-VAIL2 345 KV LINE & SPRINGR GEN UNIT 2 SIMULTANEOUS OUTAGE (SP_3Fault_SP2_SPVL)
44. 4-CYL, 3-PH FAULT AT SPRINGERVILLE 345 KV, SPRINGR-GREENLEE 345 KV LINE & SPRINGR GEN UNIT 3 SIMULTANEOUS OUTAGE (SP_3Fault_SP3_SPGL)
45. 4-CYL, 3-PH FAULT AT SPRINGERVILLE 345 KV, SPRINGR-VAIL2 345 KV LINE & GREENLEE- WINCHSTR 345 KV LINE SIMULTANEOUS OUTAGE (SPVL_GLWN_out)
46. 4-CYL, 3-PH FAULT AT SPRINGERVILLE 345 KV, SPRINGR-VAIL2 345 KV LINE & SPRINGR-GREENLEE 345 KV LINE SIMULTANEOUS OUTAGE (SPVL_SPGL_out)
47. 4-CYL, 3-PH FAULT AT SPRINGERVILLE 345 KV, SPRINGR-VAIL2 345 KV LINE & VAIL 345/138 KV TRANSFORMER SIMULTANEOUS OUTAGE (SPVL_VLT1_out)
48. SPRINGR-VAIL2 345 KV LINE & WINCHSTR-GREENLEE 345 KV LINE SIMULTANEOUS OUTAGE (SPVL_WNVL_out)
49. TORTOLITA-CORRIDOR-RANVISTO 138 KV LINES SIMULTANEOUS OUTAGE (TORT_CORR)

50. 4-CYL, 3-PH FAULT AT VAIL 345 KV,VAIL-WINCHSTR 345 KV LINE & VAIL 345/138 KV TRANSFORMER SIMULTANEOUS OUTAGE (VL_3Fault_WNVLVL_out)
51. 4-CYL, 3-PH FAULT AT WINCHESTER 345 KV, WINCHSTR-VAIL 345 KV LINE & WINCHSTR-GREENLEE 345 KV LINE SIMULTANEOUS OUTAGE (WN_3Fault_GLWNVL_out)
52. 4-CYL, 3-PH FAULT AT WINCHESTER 345 KV, WINCHSTR-GREENLEE 345 KV LINE & WINCHSTR 345/230 KV TRANSFORMER SIMULTANEOUS OUATGE (WN_3Fault_GLWNWN_out)
53. 4-CYL, 3-PH FAULT AT Bowie 345 KV, Bowie POWER PLANT OUTAGE (Bowie out)
54. 4-CYL, 3-PH FAULT AT WINCHESTER 345 KV, WINCHSTR-VAIL 345 KV LINE & WINCHSTR 345/230 KV TRANSFORMER OUTAGE (WN_3Fault_VLWNWN_out)

BOWIE POWER STATION PROJECT 500 MW GIS

ATTACHMENT A

2010 Light Autumn Power Flow Study Results

Section 1: 2010 Light Autumn Pre-Project Base Case—Power Flow Study Results—Category B Outages

2010 Light Autumn Pre--Project Base Case--Catgeory B Outages														
From	FromName	kV	To	ToName	kV	ck	Type	Rating	unit	PCT	Category	Outage_From	Outage_To	ck_O
16900	COPPERVR	345	16901	COPPERVR	230	1	T	224	MVA	104	BR	GREEN-AE 345	GREENLEE 345	1
17010	GREEN-AE	345	17009	GREEN-AE	230	1	T	193	MVA	119	BR	GREENLEE 345	COPPERVR 345	1

Section 2: 2010 Light Autumn Post-Project Base Case—Power Flow Study Results—Category B Outages

2010 Light Autumn Post--Project Base Case--Catgeory B Outages														
From	FromName	kV	To	ToName	kV	ck	Type	Rating	unit	PCT	Category	Outage_From	Outage_To	ck_O
16900	COPPERVR	345	16901	COPPERVR	230	1	T	224	MVA	104	BR	GREEN-AE 345	GREENLEE 345	1
17010	GREEN-AE	345	17009	GREEN-AE	230	1	T	193	MVA	119	BR	GREENLEE 345	COPPERVR 345	1

Section 3: 2010 Light Autumn Pre-Project Base Case—Power Flow Study Results—Category C/D Outages

2010 Light Autumn Pre-Project Base Case--Power Flow Study Results--Category C/D Outages																	
From	FromName	kV	To	ToName	kV	ck	Type	Rating	unit	PCT	Category	Outage_From	Outage_To	ck_O	Outage_From	Outage_To	ck_O
16900	COPPERVR	345	16901	COPPERVR	230	1	T	224	MVA	111	DT	CHOLLA 500	SAGUARO 500	1	GREEN-AE 345	GREENLEE 345	1
16900	COPPERVR	345	16901	COPPERVR	230	1	T	224	MVA	104	DT	SAGUARO 500	TORTLIT2 500	1	GREEN-AE 345	GREENLEE 345	1
16900	COPPERVR	345	16901	COPPERVR	230	1	T	224	MVA	104	DT	SAGUARO 500	TORTOLIT 500	1	GREEN-AE 345	GREENLEE 345	1
16900	COPPERVR	345	16901	COPPERVR	230	1	T	224	MVA	105	DT	BICKNELL 345	VAIL 345	1	GREEN-AE 345	GREENLEE 345	1
16900	COPPERVR	345	16901	COPPERVR	230	1	T	224	MVA	135	DT	GREEN-AE 345	GREENLEE 345	1	GREENLEE 345	WINCHSTR 345	1
16900	COPPERVR	345	16901	COPPERVR	230	1	T	224	MVA	101	CT	GREEN-AE 345	GREENLEE 345	1	HIDALGO 345	GREENLEE 345	1
16900	COPPERVR	345	16901	COPPERVR	230	1	T	224	MVA	104	DT	GREEN-AE 345	GREENLEE 345	1	MCKINLEY 345	SPRINGR 345	1
16900	COPPERVR	345	16901	COPPERVR	230	1	T	224	MVA	104	DT	GREEN-AE 345	GREENLEE 345	1	MCKINLEY 345	SPRINGR 345	2
16900	COPPERVR	345	16901	COPPERVR	230	1	T	224	MVA	103	DT	GREEN-AE 345	GREENLEE 345	1	PINALWES 345	SOUTH 345	1
16900	COPPERVR	345	16901	COPPERVR	230	1	T	224	MVA	104	DT	GREEN-AE 345	GREENLEE 345	1	SAN_JUAN 345	MCKINLEY 345	1
16900	COPPERVR	345	16901	COPPERVR	230	1	T	224	MVA	104	DT	GREEN-AE 345	GREENLEE 345	1	SAN_JUAN 345	MCKINLEY 345	2
16900	COPPERVR	345	16901	COPPERVR	230	1	T	224	MVA	114	DT	GREEN-AE 345	GREENLEE 345	1	SPRINGR 345	CORONADO 345	1
16900	COPPERVR	345	16901	COPPERVR	230	1	T	224	MVA	110	DT	GREEN-AE 345	GREENLEE 345	1	SPRINGR 345	VAIL2 345	1
16900	COPPERVR	345	16901	COPPERVR	230	1	T	224	MVA	102	DT	GREEN-AE 345	GREENLEE 345	1	VAIL 345	SOUTH 345	1
16900	COPPERVR	345	16901	COPPERVR	230	1	T	224	MVA	104	DT	GREEN-AE 345	GREENLEE 345	1	WESTWING 345	PINALWES 345	1
16900	COPPERVR	345	16901	COPPERVR	230	1	T	224	MVA	104	DT	GREEN-AE 345	GREENLEE 345	1	WINCHSTR 345	VAIL 345	1
16900	COPPERVR	345	16901	COPPERVR	230	1	T	224	MVA	105	DT	GREEN-AE 345	GREENLEE 345	1	CORONADO 500	CORONADO 345	1
16900	COPPERVR	345	16901	COPPERVR	230	1	T	224	MVA	105	DT	GREEN-AE 345	GREENLEE 345	1	CORONADO 500	CORONADO 345	2
16900	COPPERVR	345	16901	COPPERVR	230	1	T	224	MVA	104	DT	GREEN-AE 345	GREENLEE 345	1	PINAL_W 500	PINALWES 345	1
16900	COPPERVR	345	16901	COPPERVR	230	1	T	224	MVA	104	DT	GREEN-AE 345	GREENLEE 345	1	WESTWING 500	WESTWING 345	1
16900	COPPERVR	345	16901	COPPERVR	230	1	T	224	MVA	104	DT	GREEN-AE 345	GREENLEE 345	1	MCKINLEY 345	YAHTAHEY 115	1
16900	COPPERVR	345	16901	COPPERVR	230	1	T	224	MVA	104	DT	GREEN-AE 345	GREENLEE 345	1	SOUTH 345	SOUTH 138	1
16900	COPPERVR	345	16901	COPPERVR	230	1	T	224	MVA	104	DT	GREEN-AE 345	GREENLEE 345	1	SOUTH 345	SOUTH 138	2
16900	COPPERVR	345	16901	COPPERVR	230	1	T	224	MVA	100	DT	GREEN-AE 345	GREENLEE 345	1	SPRINGR 345	SPR GEN1 19	1
16900	COPPERVR	345	16901	COPPERVR	230	1	T	224	MVA	101	DT	GREEN-AE 345	GREENLEE 345	1	SPRINGR 345	SPR GEN2 19	1
16900	COPPERVR	345	16901	COPPERVR	230	1	T	224	MVA	100	DT	GREEN-AE 345	GREENLEE 345	1	SPRINGR 345	SPR GEN3 21	1
16900	COPPERVR	345	16901	COPPERVR	230	1	T	224	MVA	100	DT	GREEN-AE 345	GREENLEE 345	1	SPRINGR 345	SPR GEN4 21	1
16900	COPPERVR	345	16901	COPPERVR	230	1	T	224	MVA	104	DT	GREEN-AE 345	GREENLEE 345	1	VAIL 345	VAIL 138	1
16900	COPPERVR	345	16901	COPPERVR	230	1	T	224	MVA	111	DT	GREEN-AE 345	GREENLEE 345	1	VAIL2 345	VAIL 138	1
16900	COPPERVR	345	16901	COPPERVR	230	1	T	224	MVA	104	DT	GREEN-AE 345	GREENLEE 345	1	TORTOLIT 138	TORTLIT2 500	1
16900	COPPERVR	345	16901	COPPERVR	230	1	T	224	MVA	104	DT	GREEN-AE 345	GREENLEE 345	1	TORTOLIT 138	TORTOLIT 500	1

Section 4: 2010 Light Autumn Post-Project Base Case—Power Flow Study Results—Category C/D Outages

2010 Light Autumn Post-Project Base Case--Power Flow Study Results--Category C/D Outages																	
From	FromName	kV	To	ToName	kV	ck	Type	Rating	unit	PCT	Category	Outage_From	Outage_To	ck_O	Outage_From	Outage_To	ck_O
16900	COPPERVR	345	16901	COPPERVR	230	1	T	224	MVA	111	DT	CHOLLA 500	SAGUARO 500	1	GREEN-AE 345	GREENLEE 345	1
16900	COPPERVR	345	16901	COPPERVR	230	1	T	224	MVA	105	DT	SAGUARO 500	TORTLIT2 500	1	GREEN-AE 345	GREENLEE 345	1
16900	COPPERVR	345	16901	COPPERVR	230	1	T	224	MVA	105	DT	SAGUARO 500	TORTOLIT 500	1	GREEN-AE 345	GREENLEE 345	1
16900	COPPERVR	345	16901	COPPERVR	230	1	T	224	MVA	107	DT	BICKNELL 345	VAIL 345	1	GREEN-AE 345	GREENLEE 345	1
16900	COPPERVR	345	16901	COPPERVR	230	1	T	224	MVA	106	DT	GREEN-AE 345	GREENLEE 345	1	GREENLEE 345	WILLOW 345	1
16900	COPPERVR	345	16901	COPPERVR	230	1	T	224	MVA	106	CT	GREEN-AE 345	GREENLEE 345	1	HIDALGO 345	GREENLEE 345	1
16900	COPPERVR	345	16901	COPPERVR	230	1	T	224	MVA	105	DT	GREEN-AE 345	GREENLEE 345	1	MCKINLEY 345	SPRINGR 345	1
16900	COPPERVR	345	16901	COPPERVR	230	1	T	224	MVA	105	DT	GREEN-AE 345	GREENLEE 345	1	MCKINLEY 345	SPRINGR 345	2
16900	COPPERVR	345	16901	COPPERVR	230	1	T	224	MVA	101	DT	GREEN-AE 345	GREENLEE 345	1	PINALWES 345	SOUTH 345	1
16900	COPPERVR	345	16901	COPPERVR	230	1	T	224	MVA	104	DT	GREEN-AE 345	GREENLEE 345	1	SAN_JUAN 345	MCKINLEY 345	1
16900	COPPERVR	345	16901	COPPERVR	230	1	T	224	MVA	104	DT	GREEN-AE 345	GREENLEE 345	1	SAN_JUAN 345	MCKINLEY 345	2
16900	COPPERVR	345	16901	COPPERVR	230	1	T	224	MVA	116	DT	GREEN-AE 345	GREENLEE 345	1	SPRINGR 345	CORONADO 345	1
16900	COPPERVR	345	16901	COPPERVR	230	1	T	224	MVA	111	DT	GREEN-AE 345	GREENLEE 345	1	SPRINGR 345	VAIL2 345	1
16900	COPPERVR	345	16901	COPPERVR	230	1	T	224	MVA	100	DT	GREEN-AE 345	GREENLEE 345	1	VAIL 345	SOUTH 345	1
16900	COPPERVR	345	16901	COPPERVR	230	1	T	224	MVA	104	DT	GREEN-AE 345	GREENLEE 345	1	WESTWING 345	PINALWES 345	1
16900	COPPERVR	345	16901	COPPERVR	230	1	T	224	MVA	103	DT	GREEN-AE 345	GREENLEE 345	1	WINCHSTR 345	VAIL 345	1
16900	COPPERVR	345	16901	COPPERVR	230	1	T	224	MVA	162	DT	GREEN-AE 345	GREENLEE 345	1	WINCHSTR 345	WILLOW 345	1
16900	COPPERVR	345	16901	COPPERVR	230	1	T	224	MVA	106	DT	GREEN-AE 345	GREENLEE 345	1	CORONADO 500	CORONADO 345	1
16900	COPPERVR	345	16901	COPPERVR	230	1	T	224	MVA	106	DT	GREEN-AE 345	GREENLEE 345	1	CORONADO 500	CORONADO 345	2
16900	COPPERVR	345	16901	COPPERVR	230	1	T	224	MVA	104	DT	GREEN-AE 345	GREENLEE 345	1	PINAL_W 500	PINALWES 345	1
16900	COPPERVR	345	16901	COPPERVR	230	1	T	224	MVA	104	DT	GREEN-AE 345	GREENLEE 345	1	WESTWING 500	WESTWING 345	1
16900	COPPERVR	345	16901	COPPERVR	230	1	T	224	MVA	103	DT	GREEN-AE 345	GREENLEE 345	1	BOWIE 345	BOWIE_G1 18	1
16900	COPPERVR	345	16901	COPPERVR	230	1	T	224	MVA	103	DT	GREEN-AE 345	GREENLEE 345	1	BOWIE 345	BOWIE_G2 18	1
16900	COPPERVR	345	16901	COPPERVR	230	1	T	224	MVA	103	DT	GREEN-AE 345	GREENLEE 345	1	BOWIE 345	BOWIE_S1 18	1
16900	COPPERVR	345	16901	COPPERVR	230	1	T	224	MVA	104	DT	GREEN-AE 345	GREENLEE 345	1	MCKINLEY 345	YAHTAHEY 115	1
16900	COPPERVR	345	16901	COPPERVR	230	1	T	224	MVA	104	DT	GREEN-AE 345	GREENLEE 345	1	SOUTH 345	SOUTH 138	1
16900	COPPERVR	345	16901	COPPERVR	230	1	T	224	MVA	104	DT	GREEN-AE 345	GREENLEE 345	1	SOUTH 345	SOUTH 138	2
16900	COPPERVR	345	16901	COPPERVR	230	1	T	224	MVA	101	DT	GREEN-AE 345	GREENLEE 345	1	SPRINGR 345	SPR GEN1 19	1
16900	COPPERVR	345	16901	COPPERVR	230	1	T	224	MVA	101	DT	GREEN-AE 345	GREENLEE 345	1	SPRINGR 345	SPR GEN2 19	1
16900	COPPERVR	345	16901	COPPERVR	230	1	T	224	MVA	101	DT	GREEN-AE 345	GREENLEE 345	1	SPRINGR 345	SPR GEN3 21	1
16900	COPPERVR	345	16901	COPPERVR	230	1	T	224	MVA	101	DT	GREEN-AE 345	GREENLEE 345	1	SPRINGR 345	SPR GEN4 21	1
16900	COPPERVR	345	16901	COPPERVR	230	1	T	224	MVA	104	DT	GREEN-AE 345	GREENLEE 345	1	VAIL 345	VAIL 138	1
16900	COPPERVR	345	16901	COPPERVR	230	1	T	224	MVA	105	DT	GREEN-AE 345	GREENLEE 345	1	VAIL2 345	VAIL 138	1
16900	COPPERVR	345	16901	COPPERVR	230	1	T	224	MVA	103	DT	GREEN-AE 345	GREENLEE 345	1	WINCHSTR 345	WINCHSTR 230	1
16900	COPPERVR	345	16901	COPPERVR	230	1	T	224	MVA	105	DT	GREEN-AE 345	GREENLEE 345	1	TORTOLIT 138	TORTLIT2 500	1
16900	COPPERVR	345	16901	COPPERVR	230	1	T	224	MVA	105	DT	GREEN-AE 345	GREENLEE 345	1	TORTOLIT 138	TORTOLIT 500	1
17010	GREEN-AE	345	17009	GREEN-AE	230	1	T	193	MVA	102	DT	GREENLEE 345	COPPERVR 345	1	SPRINGR 345	GREENLEE 345	1
17010	GREEN-AE	345	17009	GREEN-AE	230	1	T	193	MVA	116	DT	GREENLEE 345	COPPERVR 345	1	WINCHSTR 345	WILLOW 345	1
17010	GREEN-AE	345	17009	GREEN-AE	230	1	T	193	MVA	146	DT	SPRINGR 345	CORONADO 345	1	WINCHSTR 345	WILLOW 345	1
17010	GREEN-AE	345	17009	GREEN-AE	230	1	T	193	MVA	127	CT	SPRINGR 345	VAIL2 345	1	WINCHSTR 345	WILLOW 345	1
17005	BICKNELL	345	17004	BICKNELL	230	1	T	193	MVA	109	DT	GREENLEE 345	WILLOW 345	1	WINCHSTR 345	VAIL 345	1
16109	WINCHSTR	345	17105	WINCHSTR	230	1	T	420	MVA	118	DT	GREENLEE 346	WILLOW 346	1	WINCHSTR 346	VAIL 346	1
17105	WINCHSTR	230	17002	APACHE	230	1	L	1210	Amps	104	DT	GREENLEE 346	WILLOW 346	1	WINCHSTR 346	VAIL 346	1

BOWIE POWER STATION PROJECT 500 MW GIS

ATTACHMENT B

2010 Heavy Summer Power Flow Study Results

Section 1: 2010 Heavy Summer Pre-Project Base Case—Power Flow Study Results—Category B Outages

2010 Heavy Summer Pre–Project Base Case–Catgeory B Outages														
From	FromName	kV	To	ToName	kV	ck	Type	Rating	unit	PCT	Category	Outage_From	Outage_To	ck_O
16900	COPPERVR	345	16901	COPPERVR	230	1	T	224	MVA	143.2	BR	GREEN-AE 345	GREENLEE 345	1
17010	GREEN-AE	345	17009	GREEN-AE	230	1	T	193	MVA	166.3	BR	GREENLEE 345	COPPERVR 345	1
17010	GREEN-AE	345	17009	GREEN-AE	230	1	T	193	MVA	115.6	BR	GREENLEE 345	WINCHSTR 345	1
16900	COPPERVR	345	16901	COPPERVR	230	1	T	224	MVA	111.5	BR	GREENLEE 345	WINCHSTR 345	1
17003	AVRA	115	17089	SNDARIO	115	1	L	396.11	Amps	110.8	BR	PINALWES 345	SOUTH 345	1
17003	AVRA	115	17089	SNDARIO	115	1	L	396.11	Amps	100.8	BR	SPRINGR 345	GREENLEE 345	1

Section 2: 2010 Heavy Summer Pre-Project Base Case—Power Flow Study Results—Category B Outages

2010 Heavy Summer Post-Project Base Case--Power Flow Study Results--Category B														
From	FromName	kV	To	ToName	kV	ck	Type	Rating	unit	PCT	Category	Outage_From	Outage_To	ck_O
16900	COPPERVR	345	16901	COPPERVR	230	1	T	224	MVA	144.4	BR	GREEN-AE 345	GREENLEE 345	1
17010	GREEN-AE	345	17009	GREEN-AE	230	1	T	193	MVA	166.3	BR	GREENLEE 345	COPPERVR 345	1
17010	GREEN-AE	345	17009	GREEN-AE	230	1	T	193	MVA	102.2	BR	GREENLEE 345	WILLOW 345	1
17005	BICKNELL	345	17004	BICKNELL	230	1	T	193	MVA	122.8	BR	WINCHSTR 345	VAIL 345	1
17007	BUTERFLD	230	17002	APACHE	230	1	L	924	Amps	115.9	BR	WINCHSTR 345	VAIL 345	1
17010	GREEN-AE	345	17009	GREEN-AE	230	1	T	193	MVA	140.5	BR	WINCHSTR 345	WILLOW 345	1
16900	COPPERVR	345	16901	COPPERVR	230	1	T	224	MVA	130.9	BR	WINCHSTR 345	WILLOW 345	1

Section 3: 2010 Heavy Summer Pre-Project Base Case—Power Flow Study Results—Category C/D Outages

2010 Heavy Summer Pre-Project Base Case--Power Flow Study Results--Category C/D Outages																	
From	FromName	kV	To	ToName	kV	ck	Type	Rating	unit	PCT	Category	Outage_From	Outage_To	ck_O	Outage_From	Outage_To	ck_O
16900	COPPERVR	345	16901	COPPERVR	230	1	T	224	MVA	152.5	DT	CHOLLA 500	SAGUARO 500	1	GREEN-AE 345	GREENLEE 345	1
17010	GREEN-AE	345	17009	GREEN-AE	230	1	T	193	MVA	176.5	DT	CHOLLA 500	SAGUARO 500	1	GREENLEE 345	WINCHSTR 345	1
14225	SAGUARO	230	14357	SAG.WEST	115	1	T	200	MVA	110.7	DT	CHOLLA 500	SAGUARO 500	1	PINALWES 345	SOUTH 345	1
14225	SAGUARO	230	14547	SAGUAR10	100	1	T	200	MVA	113.5	DT	CHOLLA 500	SAGUARO 500	1	PINALWES 345	SOUTH 345	1
14356	SAG.EAST	115	14547	SAGUAR10	100	1	T	200	MVA	113.4	DT	CHOLLA 500	SAGUARO 500	1	PINALWES 345	SOUTH 345	1
14350	ADAMS	115	17001	APACHE	115	1	L	662.7	Amps	102	DT	CHOLLA 500	SAGUARO 500	1	WINCHSTR 345	VAIL 345	1
17007	BUTERFLD	230	17002	APACHE	230	1	L	924	Amps	108.7	DT	CHOLLA 500	SAGUARO 500	1	WINCHSTR 345	VAIL 345	1
16900	COPPERVR	345	16901	COPPERVR	230	1	T	224	MVA	143.7	DT	SAGUARO 500	TORTLIT2 500	1	GREEN-AE 345	GREENLEE 345	1
17003	AVRA	115	17089	SNDARIO	115	1	L	396.1	Amps	100.3	DT	SAGUARO 500	TORTLIT2 500	1	GREENLEE 345	WINCHSTR 345	1
17010	GREEN-AE	345	17009	GREEN-AE	230	1	T	193	MVA	138.2	DT	SAGUARO 500	TORTLIT2 500	1	GREENLEE 345	WINCHSTR 345	1
17003	AVRA	115	17089	SNDARIO	115	1	L	396.1	Amps	107	DT	SAGUARO 500	TORTLIT2 500	1	PINALWES 345	SOUTH 345	1
17003	AVRA	115	17089	SNDARIO	115	1	L	396.1	Amps	103.6	DT	SAGUARO 500	TORTLIT2 500	1	SPRINGR 345	GREENLEE 345	1
17003	AVRA	115	17089	SNDARIO	115	1	L	396.1	Amps	137.5	DT	SAGUARO 500	TORTLIT2 500	1	TORTOLIT 138	TORTOLIT 500	1
17012	MARANA	115	14356	SAG.EAST	115	1	L	924.3	Amps	110.6	DT	SAGUARO 500	TORTLIT2 500	1	TORTOLIT 138	TORTOLIT 500	1
17089	SNDARIO	115	17022	THREEPNT	115	1	L	396.1	Amps	101.5	DT	SAGUARO 500	TORTLIT2 500	1	TORTOLIT 138	TORTOLIT 500	1
16900	COPPERVR	345	16901	COPPERVR	230	1	T	224	MVA	143.7	DT	SAGUARO 500	TORTOLIT 500	1	GREEN-AE 345	GREENLEE 345	1
17003	AVRA	115	17089	SNDARIO	115	1	L	396.1	Amps	100.3	DT	SAGUARO 500	TORTOLIT 500	1	GREENLEE 345	WINCHSTR 345	1
17010	GREEN-AE	345	17009	GREEN-AE	230	1	T	193	MVA	138.2	DT	SAGUARO 500	TORTOLIT 500	1	GREENLEE 345	WINCHSTR 345	1
17003	AVRA	115	17089	SNDARIO	115	1	L	396.1	Amps	107	DT	SAGUARO 500	TORTOLIT 500	1	PINALWES 345	SOUTH 345	1
17003	AVRA	115	17089	SNDARIO	115	1	L	396.1	Amps	103.6	DT	SAGUARO 500	TORTOLIT 500	1	SPRINGR 345	GREENLEE 345	1
17003	AVRA	115	17089	SNDARIO	115	1	L	396.1	Amps	137.5	DT	SAGUARO 500	TORTOLIT 500	1	TORTOLIT 138	TORTLIT2 500	1
17012	MARANA	115	14356	SAG.EAST	115	1	L	924.3	Amps	110.6	DT	SAGUARO 500	TORTOLIT 500	1	TORTOLIT 138	TORTLIT2 500	1
17089	SNDARIO	115	17022	THREEPNT	115	1	L	396.1	Amps	101.5	DT	SAGUARO 500	TORTOLIT 500	1	TORTOLIT 138	TORTLIT2 500	1
16900	COPPERVR	345	16901	COPPERVR	230	1	T	224	MVA	145.2	DT	BICKNELL 345	VAIL 345	1	GREEN-AE 345	GREENLEE 345	1
17010	GREEN-AE	345	17009	GREEN-AE	230	1	T	193	MVA	140.2	DT	BICKNELL 345	VAIL 345	1	GREENLEE 345	WINCHSTR 345	1
17003	AVRA	115	17089	SNDARIO	115	1	L	396.1	Amps	106.2	DT	BICKNELL 345	VAIL 345	1	PINALWES 345	SOUTH 345	1
17003	AVRA	115	17089	SNDARIO	115	1	L	396.1	Amps	104.9	DT	BICKNELL 345	VAIL 345	1	SPRINGR 345	GREENLEE 345	1
17003	AVRA	115	17089	SNDARIO	115	1	L	396.1	Amps	101.8	DT	GREEN-AE 345	GREENLEE 345	1	GREENLEE 345	WINCHSTR 345	1
16900	COPPERVR	345	16901	COPPERVR	230	1	T	224	MVA	192.7	DT	GREEN-AE 345	GREENLEE 345	1	GREENLEE 345	WINCHSTR 345	1
16900	COPPERVR	345	16901	COPPERVR	230	1	T	224	MVA	133.3	CT	GREEN-AE 345	GREENLEE 345	1	HIDALGO 345	GREENLEE 345	1
16900	COPPERVR	345	16901	COPPERVR	230	1	T	224	MVA	142.8	DT	GREEN-AE 345	GREENLEE 345	1	MCKINLEY 345	SPRINGR 345	1
16900	COPPERVR	345	16901	COPPERVR	230	1	T	224	MVA	142.7	DT	GREEN-AE 345	GREENLEE 345	1	MCKINLEY 345	SPRINGR 345	2
17003	AVRA	115	17089	SNDARIO	115	1	L	396.1	Amps	112.6	DT	GREEN-AE 345	GREENLEE 345	1	PINALWES 345	SOUTH 345	1
16900	COPPERVR	345	16901	COPPERVR	230	1	T	224	MVA	148.9	DT	GREEN-AE 345	GREENLEE 345	1	PINALWES 345	SOUTH 345	1
16900	COPPERVR	345	16901	COPPERVR	230	1	T	224	MVA	142.8	DT	GREEN-AE 345	GREENLEE 345	1	SAN_JUAN 345	MCKINLEY 345	1

2010 Heavy Summer Pre-Project Base Case--Power Flow Study Results--Category C/D Outages																	
From	FromName	kV	To	ToName	kV	ck	Type	Rating	unit	PCT	Category	Outage_From	Outage_To	ck_O	Outage_From	Outage_To	ck_O
16900	COPPERVR	345	16901	COPPERVR	230	1	T	224	MVA	142.8	DT	GREEN-AE 345	GREENLEE 345	1	SAN_JUAN 345	MCKINLEY 345	2
16900	COPPERVR	345	16901	COPPERVR	230	1	T	224	MVA	150.6	DT	GREEN-AE 345	GREENLEE 345	1	SPRINGR 345	CORONADO 345	1
16900	COPPERVR	345	16901	COPPERVR	230	1	T	224	MVA	120	CT	GREEN-AE 345	GREENLEE 345	1	SPRINGR 345	GREENLEE 345	1
16900	COPPERVR	345	16901	COPPERVR	230	1	T	224	MVA	139.2	DT	GREEN-AE 345	GREENLEE 345	1	SPRINGR 345	LUNA 345	1
16900	COPPERVR	345	16901	COPPERVR	230	1	T	224	MVA	151.6	DT	GREEN-AE 345	GREENLEE 345	1	SPRINGR 345	VAIL2 345	1
16900	COPPERVR	345	16901	COPPERVR	230	1	T	224	MVA	142	DT	GREEN-AE 345	GREENLEE 345	1	VAIL 345	SOUTH 345	1
16900	COPPERVR	345	16901	COPPERVR	230	1	T	224	MVA	143.4	DT	GREEN-AE 345	GREENLEE 345	1	WESTWING 345	PINALWES 345	1
16900	COPPERVR	345	16901	COPPERVR	230	1	T	224	MVA	143.6	DT	GREEN-AE 345	GREENLEE 345	1	WINCHSTR 345	VAIL 345	1
16900	COPPERVR	345	16901	COPPERVR	230	1	T	224	MVA	144	DT	GREEN-AE 345	GREENLEE 345	1	CORONADO 500	CORONADO 345	1
16900	COPPERVR	345	16901	COPPERVR	230	1	T	224	MVA	144	DT	GREEN-AE 345	GREENLEE 345	1	CORONADO 500	CORONADO 345	2
16900	COPPERVR	345	16901	COPPERVR	230	1	T	224	MVA	144.8	DT	GREEN-AE 345	GREENLEE 345	1	PINAL_W 500	PINALWES 345	1
16900	COPPERVR	345	16901	COPPERVR	230	1	T	224	MVA	143.3	DT	GREEN-AE 345	GREENLEE 345	1	WESTWING 500	WESTWING 345	1
16900	COPPERVR	345	16901	COPPERVR	230	1	T	224	MVA	143.2	DT	GREEN-AE 345	GREENLEE 345	1	MCKINLEY 345	YAHTAHEY 115	1
16900	COPPERVR	345	16901	COPPERVR	230	1	T	224	MVA	143.1	DT	GREEN-AE 345	GREENLEE 345	1	SOUTH 345	SOUTH 138	1
16900	COPPERVR	345	16901	COPPERVR	230	1	T	224	MVA	143.1	DT	GREEN-AE 345	GREENLEE 345	1	SOUTH 345	SOUTH 138	2
16900	COPPERVR	345	16901	COPPERVR	230	1	T	224	MVA	140.8	DT	GREEN-AE 345	GREENLEE 345	1	SPRINGR 345	SPR GEN1 19	1
16900	COPPERVR	345	16901	COPPERVR	230	1	T	224	MVA	140.8	DT	GREEN-AE 345	GREENLEE 345	1	SPRINGR 345	SPR GEN2 19	1
16900	COPPERVR	345	16901	COPPERVR	230	1	T	224	MVA	140.5	DT	GREEN-AE 345	GREENLEE 345	1	SPRINGR 345	SPR GEN3 21	1
16900	COPPERVR	345	16901	COPPERVR	230	1	T	224	MVA	140.5	DT	GREEN-AE 345	GREENLEE 345	1	SPRINGR 345	SPR GEN4 21	1
16900	COPPERVR	345	16901	COPPERVR	230	1	T	224	MVA	140	DT	GREEN-AE 345	GREENLEE 345	1	VAIL 345	VAIL 138	1
16900	COPPERVR	345	16901	COPPERVR	230	1	T	224	MVA	151.9	DT	GREEN-AE 345	GREENLEE 345	1	VAIL2 345	VAIL 138	1
16900	COPPERVR	345	16901	COPPERVR	230	1	T	224	MVA	126.6	DT	GREEN-AE 345	GREENLEE 345	1	WINCHSTR 345	WINCHSTR 230	1
16900	COPPERVR	345	16901	COPPERVR	230	1	T	224	MVA	143.7	DT	GREEN-AE 345	GREENLEE 345	1	TORTOLIT 138	TORTLIT2 500	1
16900	COPPERVR	345	16901	COPPERVR	230	1	T	224	MVA	143.7	DT	GREEN-AE 345	GREENLEE 345	1	TORTOLIT 138	TORTOLIT 500	1
17010	GREEN-AE	345	17009	GREEN-AE	230	1	T	193	MVA	151	CT	GREENLEE 345	COPPERVR 345	1	GREENLEE 345	WINCHSTR 345	1
17003	AVRA	115	17089	SNDARIO	115	1	L	396.1	Amps	100.7	DT	GREENLEE 345	COPPERVR 345	1	PINALWES 345	SOUTH 345	1
17007	BUTERFLD	230	17002	APACHE	230	1	L	924	Amps	100.7	DT	GREENLEE 345	COPPERVR 345	1	WINCHSTR 345	VAIL 345	1
17010	GREEN-AE	345	17009	GREEN-AE	230	1	T	193	MVA	140.4	DT	GREENLEE 345	WINCHSTR 345	1	MCKINLEY 345	SPRINGR 345	1
17010	GREEN-AE	345	17009	GREEN-AE	230	1	T	193	MVA	140.3	DT	GREENLEE 345	WINCHSTR 345	1	MCKINLEY 345	SPRINGR 345	2
17003	AVRA	115	17089	SNDARIO	115	1	L	396.1	Amps	144.7	DT	GREENLEE 345	WINCHSTR 345	1	PINALWES 345	SOUTH 345	1
17010	GREEN-AE	345	17009	GREEN-AE	230	1	T	193	MVA	178.7	DT	GREENLEE 345	WINCHSTR 345	1	PINALWES 345	SOUTH 345	1
17012	MARANA	115	14356	SAG.EAST	115	1	L	924.3	Amps	107.8	DT	GREENLEE 345	WINCHSTR 345	1	PINALWES 345	SOUTH 345	1
17089	SNDARIO	115	17022	THREEPNT	115	1	L	396.1	Amps	106	DT	GREENLEE 345	WINCHSTR 345	1	PINALWES 345	SOUTH 345	1
17010	GREEN-AE	345	17009	GREEN-AE	230	1	T	193	MVA	139.4	DT	GREENLEE 345	WINCHSTR 345	1	SAN_JUAN 345	MCKINLEY 345	1
17010	GREEN-AE	345	17009	GREEN-AE	230	1	T	193	MVA	139.4	DT	GREENLEE 345	WINCHSTR 345	1	SAN_JUAN 345	MCKINLEY 345	2

2010 Heavy Summer Pre-Project Base Case--Power Flow Study Results--Category C/D Outages																	
From	FromName	kV	To	ToName	kV	ck	Type	Rating	unit	PCT	Category	Outage_From	Outage_To	ck_O	Outage_From	Outage_To	ck_O
17010	GREEN-AE	345	17009	GREEN-AE	230	1	T	193	MVA	174.6	DT	GREENLEE 345	WINCHSTR 345	1	SPRINGR 345	CORONADO 345	1
17010	GREEN-AE	345	17009	GREEN-AE	230	1	T	193	MVA	154.8	CT	GREENLEE 345	WINCHSTR 345	1	SPRINGR 345	VAIL2 345	1
17010	GREEN-AE	345	17009	GREEN-AE	230	1	T	193	MVA	141.9	DT	GREENLEE 345	WINCHSTR 345	1	VAIL 345	SOUTH 345	1
17010	GREEN-AE	345	17009	GREEN-AE	230	1	T	193	MVA	142.3	DT	GREENLEE 345	WINCHSTR 345	1	WESTWING 345	PINALWES 345	1
17010	GREEN-AE	345	17009	GREEN-AE	230	1	T	193	MVA	144.4	DT	GREENLEE 345	WINCHSTR 345	1	CORONADO 500	CORONADO 345	1
17010	GREEN-AE	345	17009	GREEN-AE	230	1	T	193	MVA	143.7	DT	GREENLEE 345	WINCHSTR 345	1	CORONADO 500	CORONADO 345	2
17003	AVRA	115	17089	SNDARIO	115	1	L	396.1	Amps	110.8	DT	GREENLEE 345	WINCHSTR 345	1	PINAL_W 500	PINALWES 345	1
17010	GREEN-AE	345	17009	GREEN-AE	230	1	T	193	MVA	150.8	DT	GREENLEE 345	WINCHSTR 345	1	PINAL_W 500	PINALWES 345	1
17010	GREEN-AE	345	17009	GREEN-AE	230	1	T	193	MVA	142	DT	GREENLEE 345	WINCHSTR 345	1	WESTWING 500	WESTWING 345	1
17010	GREEN-AE	345	17009	GREEN-AE	230	1	T	193	MVA	141	DT	GREENLEE 345	WINCHSTR 345	1	MCKINLEY 345	YAHTAHEY 115	1
17010	GREEN-AE	345	17009	GREEN-AE	230	1	T	193	MVA	140.6	DT	GREENLEE 345	WINCHSTR 345	1	SOUTH 345	SOUTH 138	1
17010	GREEN-AE	345	17009	GREEN-AE	230	1	T	193	MVA	140.6	DT	GREENLEE 345	WINCHSTR 345	1	SOUTH 345	SOUTH 138	2
17003	AVRA	115	17089	SNDARIO	115	1	L	396.1	Amps	123.9	DT	GREENLEE 345	WINCHSTR 345	1	VAIL2 345	VAIL 138	1
17010	GREEN-AE	345	17009	GREEN-AE	230	1	T	193	MVA	186.3	DT	GREENLEE 345	WINCHSTR 345	1	VAIL2 345	VAIL 138	1
17003	AVRA	115	17089	SNDARIO	115	1	L	396.1	Amps	100.3	DT	GREENLEE 345	WINCHSTR 345	1	TORTOLIT 138	TORTLIT2 500	1
17010	GREEN-AE	345	17009	GREEN-AE	230	1	T	193	MVA	138.2	DT	GREENLEE 345	WINCHSTR 345	1	TORTOLIT 138	TORTLIT2 500	1
17003	AVRA	115	17089	SNDARIO	115	1	L	396.1	Amps	100.3	DT	GREENLEE 345	WINCHSTR 345	1	TORTOLIT 138	TORTOLIT 500	1
17010	GREEN-AE	345	17009	GREEN-AE	230	1	T	193	MVA	138.2	DT	GREENLEE 345	WINCHSTR 345	1	TORTOLIT 138	TORTOLIT 500	1
17003	AVRA	115	17089	SNDARIO	115	1	L	396.1	Amps	123.8	DT	HIDALGO 345	GREENLEE 345	1	PINALWES 345	SOUTH 345	1
17003	AVRA	115	17089	SNDARIO	115	1	L	396.1	Amps	128.8	DT	HIDALGO 345	GREENLEE 345	1	SPRINGR 345	GREENLEE 345	1
17012	MARANA	115	14356	SAG.EAST	115	1	L	924.3	Amps	104.7	DT	HIDALGO 345	GREENLEE 345	1	SPRINGR 345	GREENLEE 345	1
17003	AVRA	115	17089	SNDARIO	115	1	L	396.1	Amps	106.6	DT	HIDALGO 345	GREENLEE 345	1	SPRINGR 345	VAIL2 345	1
17003	AVRA	115	17089	SNDARIO	115	1	L	396.1	Amps	106.4	DT	HIDALGO 345	GREENLEE 345	1	VAIL2 345	VAIL 138	1
17003	AVRA	115	17089	SNDARIO	115	1	L	396.1	Amps	111.2	DT	MCKINLEY 345	SPRINGR 345	1	PINALWES 345	SOUTH 345	1
17003	AVRA	115	17089	SNDARIO	115	1	L	396.1	Amps	100.9	DT	MCKINLEY 345	SPRINGR 345	1	SPRINGR 345	GREENLEE 345	1
17003	AVRA	115	17089	SNDARIO	115	1	L	396.1	Amps	111.3	DT	MCKINLEY 345	SPRINGR 345	2	PINALWES 345	SOUTH 345	1
17003	AVRA	115	17089	SNDARIO	115	1	L	396.1	Amps	101	DT	MCKINLEY 345	SPRINGR 345	2	SPRINGR 345	GREENLEE 345	1
17003	AVRA	115	17089	SNDARIO	115	1	L	396.1	Amps	111.2	DT	PINALWES 345	SOUTH 345	1	SAN_JUAN 345	MCKINLEY 345	1
17003	AVRA	115	17089	SNDARIO	115	1	L	396.1	Amps	111.2	DT	PINALWES 345	SOUTH 345	1	SAN_JUAN 345	MCKINLEY 345	2
17003	AVRA	115	17089	SNDARIO	115	1	L	396.1	Amps	147.2	DT	PINALWES 345	SOUTH 345	1	SPRINGR 345	GREENLEE 345	1
17012	MARANA	115	14356	SAG.EAST	115	1	L	924.3	Amps	112.9	DT	PINALWES 345	SOUTH 345	1	SPRINGR 345	GREENLEE 345	1
17089	SNDARIO	115	17022	THREEPNT	115	1	L	396.1	Amps	108.8	DT	PINALWES 345	SOUTH 345	1	SPRINGR 345	GREENLEE 345	1
17003	AVRA	115	17089	SNDARIO	115	1	L	396.1	Amps	116	DT	PINALWES 345	SOUTH 345	1	SPRINGR 345	LUNA 345	1
17003	AVRA	115	17089	SNDARIO	115	1	L	396.1	Amps	134.7	DT	PINALWES 345	SOUTH 345	1	SPRINGR 345	VAIL2 345	1
17012	MARANA	115	14356	SAG.EAST	115	1	L	924.3	Amps	104.9	DT	PINALWES 345	SOUTH 345	1	SPRINGR 345	VAIL2 345	1

2010 Heavy Summer Pre-Project Base Case--Power Flow Study Results--Category C/D Outages																	
From	FromName	kV	To	ToName	kV	ck	Type	Rating	unit	PCT	Category	Outage_From	Outage_To	ck_O	Outage_From	Outage_To	ck_O
17003	AVRA	115	17089	SNDARIO	115	1	L	396.1	Amps	133	DT	PINALWES 345	SOUTH 345	1	WINCHSTR 345	VAIL 345	1
17005	BICKNELL	345	17004	BICKNELL	230	1	T	193	MVA	136.8	DT	PINALWES 345	SOUTH 345	1	WINCHSTR 345	VAIL 345	1
17007	BUTERFLD	230	17002	APACHE	230	1	L	924	Amps	114.4	DT	PINALWES 345	SOUTH 345	1	WINCHSTR 345	VAIL 345	1
17003	AVRA	115	17089	SNDARIO	115	1	L	396.1	Amps	109.4	DT	PINALWES 345	SOUTH 345	1	CORONADO 500	CORONADO 345	1
17003	AVRA	115	17089	SNDARIO	115	1	L	396.1	Amps	108.4	DT	PINALWES 345	SOUTH 345	1	CORONADO 500	CORONADO 345	2
17003	AVRA	115	17089	SNDARIO	115	1	L	396.1	Amps	111	DT	PINALWES 345	SOUTH 345	1	PINAL_W 500	PINALWES 345	1
17003	AVRA	115	17089	SNDARIO	115	1	L	396.1	Amps	111	DT	PINALWES 345	SOUTH 345	1	WESTWING 500	WESTWING 345	1
17003	AVRA	115	17089	SNDARIO	115	1	L	396.1	Amps	110.7	DT	PINALWES 345	SOUTH 345	1	MCKINLEY 345	YAHTAHEY 115	1
17003	AVRA	115	17089	SNDARIO	115	1	L	396.1	Amps	109.6	DT	PINALWES 345	SOUTH 345	1	SOUTH 345	SOUTH 138	1
17003	AVRA	115	17089	SNDARIO	115	1	L	396.1	Amps	116	DT	PINALWES 345	SOUTH 345	1	SPRINGR 345	SPR GEN1 19	1
17003	AVRA	115	17089	SNDARIO	115	1	L	396.1	Amps	116	DT	PINALWES 345	SOUTH 345	1	SPRINGR 345	SPR GEN2 19	1
17003	AVRA	115	17089	SNDARIO	115	1	L	396.1	Amps	117.7	DT	PINALWES 345	SOUTH 345	1	SPRINGR 345	SPR GEN3 21	1
17003	AVRA	115	17089	SNDARIO	115	1	L	396.1	Amps	117.7	DT	PINALWES 345	SOUTH 345	1	SPRINGR 345	SPR GEN4 21	1
17003	AVRA	115	17089	SNDARIO	115	1	L	396.1	Amps	134.3	DT	PINALWES 345	SOUTH 345	1	VAIL2 345	VAIL 138	1
17012	MARANA	115	14356	SAG.EAST	115	1	L	924.3	Amps	104.6	DT	PINALWES 345	SOUTH 345	1	VAIL2 345	VAIL 138	1
17003	AVRA	115	17089	SNDARIO	115	1	L	396.1	Amps	109	DT	PINALWES 345	SOUTH 345	1	WINCHSTR 345	WINCHSTR 230	1
17003	AVRA	115	17089	SNDARIO	115	1	L	396.1	Amps	107	DT	PINALWES 345	SOUTH 345	1	TORTOLIT 138	TORTLIT2 500	1
17003	AVRA	115	17089	SNDARIO	115	1	L	396.1	Amps	107	DT	PINALWES 345	SOUTH 345	1	TORTOLIT 138	TORTOLIT 500	1
17003	AVRA	115	17089	SNDARIO	115	1	L	396.1	Amps	101	DT	SAN_JUAN 345	MCKINLEY 345	1	SPRINGR 345	GREENLEE 345	1
17003	AVRA	115	17089	SNDARIO	115	1	L	396.1	Amps	101	DT	SAN_JUAN 345	MCKINLEY 345	2	SPRINGR 345	GREENLEE 345	1
17007	BUTERFLD	230	17002	APACHE	230	1	L	924	Amps	106.2	DT	SPRINGR 345	CORONADO 345	1	WINCHSTR 345	VAIL 345	1
17003	AVRA	115	17089	SNDARIO	115	1	L	396.1	Amps	113.6	DT	SPRINGR 345	GREENLEE 345	1	SPRINGR 345	LUNA 345	1
17003	AVRA	115	17089	SNDARIO	115	1	L	396.1	Amps	101.5	DT	SPRINGR 345	GREENLEE 345	1	VAIL 345	SOUTH 345	1
17003	AVRA	115	17089	SNDARIO	115	1	L	396.1	Amps	101.8	DT	SPRINGR 345	GREENLEE 345	1	WESTWING 345	PINALWES 345	1
17003	AVRA	115	17089	SNDARIO	115	1	L	396.1	Amps	101.8	DT	SPRINGR 345	GREENLEE 345	1	WINCHSTR 345	VAIL 345	1
17003	AVRA	115	17089	SNDARIO	115	1	L	396.1	Amps	113.4	DT	SPRINGR 345	GREENLEE 345	1	PINAL_W 500	PINALWES 345	1
17003	AVRA	115	17089	SNDARIO	115	1	L	396.1	Amps	101.5	DT	SPRINGR 345	GREENLEE 345	1	WESTWING 500	WESTWING 345	1
17003	AVRA	115	17089	SNDARIO	115	1	L	396.1	Amps	100.9	DT	SPRINGR 345	GREENLEE 345	1	MCKINLEY 345	YAHTAHEY 115	1
17003	AVRA	115	17089	SNDARIO	115	1	L	396.1	Amps	102.8	DT	SPRINGR 345	GREENLEE 345	1	SPRINGR 345	SPR GEN1 19	1
17003	AVRA	115	17089	SNDARIO	115	1	L	396.1	Amps	102.8	DT	SPRINGR 345	GREENLEE 345	1	SPRINGR 345	SPR GEN2 19	1
17003	AVRA	115	17089	SNDARIO	115	1	L	396.1	Amps	103	DT	SPRINGR 345	GREENLEE 345	1	SPRINGR 345	SPR GEN3 21	1
17003	AVRA	115	17089	SNDARIO	115	1	L	396.1	Amps	125.3	DT	SPRINGR 345	GREENLEE 345	1	VAIL2 345	VAIL 138	1
17012	MARANA	115	14356	SAG.EAST	115	1	L	924.3	Amps	101.1	DT	SPRINGR 345	GREENLEE 345	1	VAIL2 345	VAIL 138	1
17003	AVRA	115	17089	SNDARIO	115	1	L	396.1	Amps	103.6	DT	SPRINGR 345	GREENLEE 345	1	TORTOLIT 138	TORTLIT2 500	1
17003	AVRA	115	17089	SNDARIO	115	1	L	396.1	Amps	103.6	DT	SPRINGR 345	GREENLEE 345	1	TORTOLIT 138	TORTOLIT 500	1

2010 Heavy Summer Pre-Project Base Case--Power Flow Study Results--Category C/D Outages																	
From	FromName	kV	To	ToName	kV	ck	Type	Rating	unit	PCT	Category	Outage_From	Outage_To	ck_O	Outage_From	Outage_To	ck_O
17003	AVRA	115	17089	SNDARIO	115	1	L	396.1	Amps	101.1	DT	SPRINGR 345	LUNA 345	1	SPRINGR 345	VAIL2 345	1
17003	AVRA	115	17089	SNDARIO	115	1	L	396.1	Amps	101	DT	SPRINGR 345	LUNA 345	1	VAIL2 345	VAIL 138	1
17003	AVRA	115	17089	SNDARIO	115	1	L	396.1	Amps	109.3	DT	SPRINGR 345	VAIL2 345	1	PINAL_W 500	PINALWES 345	1
17003	AVRA	115	17089	SNDARIO	115	1	L	396.1	Amps	106.2	DT	WINCHSTR 345	VAIL 345	1	PINAL_W 500	PINALWES 345	1
17005	BICKNELL	345	17004	BICKNELL	230	1	T	193	MVA	101.5	DT	WINCHSTR 345	VAIL 345	1	PINAL_W 500	PINALWES 345	1
17007	BUTERFLD	230	17002	APACHE	230	1	L	924	Amps	100.4	DT	WINCHSTR 345	VAIL 345	1	PINAL_W 500	PINALWES 345	1
17003	AVRA	115	17089	SNDARIO	115	1	L	396.1	Amps	112.7	DT	WINCHSTR 345	VAIL 345	1	VAIL2 345	VAIL 138	1
17005	BICKNELL	345	17004	BICKNELL	230	1	T	193	MVA	128.4	DT	WINCHSTR 345	VAIL 345	1	VAIL2 345	VAIL 138	1
17007	BUTERFLD	230	17002	APACHE	230	1	L	924	Amps	115.5	DT	WINCHSTR 345	VAIL 345	1	VAIL2 345	VAIL 138	1
17003	AVRA	115	17089	SNDARIO	115	1	L	396.1	Amps	111.6	DT	PINAL_W 500	PINALWES 345	1	WESTWING 500	WESTWING 345	1
17003	AVRA	115	17089	SNDARIO	115	1	L	396.1	Amps	109.1	DT	PINAL_W 500	PINALWES 345	1	VAIL2 345	VAIL 138	1
17003	AVRA	115	17089	SNDARIO	115	1	L	396.1	Amps	137.5	DT	TORTOLIT 138	TORTLIT2 500	1	TORTOLIT 138	TORTOLIT 500	1
17012	MARANA	115	14356	SAG.EAST	115	1	L	924.3	Amps	110.6	DT	TORTOLIT 138	TORTLIT2 500	1	TORTOLIT 138	TORTOLIT 500	1
17089	SNDARIO	115	17022	THREEPNT	115	1	L	396.1	Amps	101.5	DT	TORTOLIT 138	TORTLIT2 500	1	TORTOLIT 138	TORTOLIT 500	1

Section 4: 2010 Heavy Summer Post-Project Base Case—Power Flow Study Results—Category C/D Outages

2010 Heavy Summer Post-Project Base Case--Power Flow Study Results--Category C/D Outages																	
From	FromName	kV	To	ToName	kV	ck	Type	Rating	unit	PCT	Category	Outage_From	Outage_To	ck_O	Outage_From	Outage_To	ck_O
16900	COPPERVR	345	16901	COPPERVR	230	1	T	224	MVA	156	DT	CHOLLA 500	SAGUARO 500	1	GREEN-AE 345	GREENLEE 345	1
17009	GREEN-AE	230	17010	GREEN-AE	345	1	T	193	MVA	107	DT	CHOLLA 500	SAGUARO 500	1	GREENLEE 345	COPPERVR 345	1
17009	GREEN-AE	230	17010	GREEN-AE	345	1	T	193	MVA	153	DT	CHOLLA 500	SAGUARO 500	1	GREENLEE 345	WILLOW 345	1
14350	ADAMS	115	17001	APACHE	115	1	L	663	Amps	120	DT	CHOLLA 500	SAGUARO 500	1	WINCHSTR 345	VAIL 345	1
17005	BICKNELL	345	17004	BICKNELL	230	1	T	193	MVA	133	DT	CHOLLA 500	SAGUARO 500	1	WINCHSTR 345	VAIL 345	1
17007	BUTERFLD	230	17002	APACHE	230	1	L	924	Amps	133	DT	CHOLLA 500	SAGUARO 500	1	WINCHSTR 345	VAIL 345	1
17016	PANTANO	230	17547	SLOAN	230	1	L	924	Amps	106	DT	CHOLLA 500	SAGUARO 500	1	WINCHSTR 345	VAIL 345	1
17547	SLOAN	230	17007	BUTERFLD	230	1	L	924	Amps	113	DT	CHOLLA 500	SAGUARO 500	1	WINCHSTR 345	VAIL 345	1
17010	GREEN-AE	345	17009	GREEN-AE	230	1	T	193	MVA	222	DT	CHOLLA 500	SAGUARO 500	1	WINCHSTR 345	WILLOW 345	1
16900	COPPERVR	345	16901	COPPERVR	230	1	T	224	MVA	145	DT	SAGUARO 500	TORTLIT2 500	1	GREEN-AE 345	GREENLEE 345	1
17005	BICKNELL	345	17004	BICKNELL	230	1	T	193	MVA	117	DT	SAGUARO 500	TORTLIT2 500	1	WINCHSTR 345	VAIL 345	1
17007	BUTERFLD	230	17002	APACHE	230	1	L	924	Amps	111	DT	SAGUARO 500	TORTLIT2 500	1	WINCHSTR 345	VAIL 345	1
17010	GREEN-AE	345	17009	GREEN-AE	230	1	T	193	MVA	181	DT	SAGUARO 500	TORTLIT2 500	1	WINCHSTR 345	WILLOW 345	1
17003	AVRA	115	17089	SNDARIO	115	1	L	396	Amps	111	DT	SAGUARO 500	TORTLIT2 500	1	TORTOLIT 138	TORTOLIT 500	1
16900	COPPERVR	345	16901	COPPERVR	230	1	T	224	MVA	145	DT	SAGUARO 500	TORTOLIT 500	1	GREEN-AE 345	GREENLEE 345	1
17005	BICKNELL	345	17004	BICKNELL	230	1	T	193	MVA	117	DT	SAGUARO 500	TORTOLIT 500	1	WINCHSTR 345	VAIL 345	1
17007	BUTERFLD	230	17002	APACHE	230	1	L	924	Amps	111	DT	SAGUARO 500	TORTOLIT 500	1	WINCHSTR 345	VAIL 345	1
17010	GREEN-AE	345	17009	GREEN-AE	230	1	T	193	MVA	181	DT	SAGUARO 500	TORTOLIT 500	1	WINCHSTR 345	WILLOW 345	1
17003	AVRA	115	17089	SNDARIO	115	1	L	396	Amps	111	DT	SAGUARO 500	TORTOLIT 500	1	TORTOLIT 138	TORTLIT2 500	1
16900	COPPERVR	345	16901	COPPERVR	230	1	T	224	MVA	147	DT	BICKNELL 345	VAIL 345	1	GREEN-AE 345	GREENLEE 345	1
14350	ADAMS	115	17001	APACHE	115	1	L	663	Amps	110	DT	BICKNELL 345	VAIL 345	1	WINCHSTR 345	VAIL 345	1
17010	GREEN-AE	345	17009	GREEN-AE	230	1	T	193	MVA	184	DT	BICKNELL 345	VAIL 345	1	WINCHSTR 345	WILLOW 345	1
16900	COPPERVR	345	16901	COPPERVR	230	1	T	224	MVA	171	DT	GREEN-AE 345	GREENLEE 345	1	GREENLEE 345	WILLOW 345	1
16900	COPPERVR	345	16901	COPPERVR	230	1	T	224	MVA	138	CT	GREEN-AE 345	GREENLEE 345	1	HIDALGO 345	GREENLEE 345	1
16900	COPPERVR	345	16901	COPPERVR	230	1	T	224	MVA	144	DT	GREEN-AE 345	GREENLEE 345	1	MCKINLEY 345	SPRINGR 345	1
16900	COPPERVR	345	16901	COPPERVR	230	1	T	224	MVA	144	DT	GREEN-AE 345	GREENLEE 345	1	MCKINLEY 345	SPRINGR 345	2
16900	COPPERVR	345	16901	COPPERVR	230	1	T	224	MVA	149	DT	GREEN-AE 345	GREENLEE 345	1	PINALWES 345	SOUTH 345	1
16900	COPPERVR	345	16901	COPPERVR	230	1	T	224	MVA	144	DT	GREEN-AE 345	GREENLEE 345	1	SAN_JUAN 345	MCKINLEY 345	1
16900	COPPERVR	345	16901	COPPERVR	230	1	T	224	MVA	144	DT	GREEN-AE 345	GREENLEE 345	1	SAN_JUAN 345	MCKINLEY 345	2
16900	COPPERVR	345	16901	COPPERVR	230	1	T	224	MVA	155	DT	GREEN-AE 345	GREENLEE 345	1	SPRINGR 345	CORONADO 345	1
16900	COPPERVR	345	16901	COPPERVR	230	1	T	224	MVA	127	CT	GREEN-AE 345	GREENLEE 345	1	SPRINGR 345	GREENLEE 345	1
16900	COPPERVR	345	16901	COPPERVR	230	1	T	224	MVA	141	DT	GREEN-AE 345	GREENLEE 345	1	SPRINGR 345	LUNA 345	1
16900	COPPERVR	345	16901	COPPERVR	230	1	T	224	MVA	155	DT	GREEN-AE 345	GREENLEE 345	1	SPRINGR 345	VAIL2 345	1
16900	COPPERVR	345	16901	COPPERVR	230	1	T	224	MVA	141	DT	GREEN-AE 345	GREENLEE 345	1	VAIL 345	SOUTH 345	1
16900	COPPERVR	345	16901	COPPERVR	230	1	T	224	MVA	144	DT	GREEN-AE 345	GREENLEE 345	1	WESTWING 345	PINALWES 345	1
16900	COPPERVR	345	16901	COPPERVR	230	1	T	224	MVA	137	DT	GREEN-AE 345	GREENLEE 345	1	WILLOW 345	BOWIE 345	1
17005	BICKNELL	345	17004	BICKNELL	230	1	T	193	MVA	119	DT	GREEN-AE 345	GREENLEE 345	1	WINCHSTR 345	VAIL 345	1
17007	BUTERFLD	230	17002	APACHE	230	1	L	924	Amps	114	DT	GREEN-AE 345	GREENLEE 345	1	WINCHSTR 345	VAIL 345	1
16900	COPPERVR	345	16901	COPPERVR	230	1	T	224	MVA	142	DT	GREEN-AE 345	GREENLEE 345	1	WINCHSTR 345	VAIL 345	1
16900	COPPERVR	345	16901	COPPERVR	230	1	T	224	MVA	230	DT	GREEN-AE 345	GREENLEE 345	1	WINCHSTR 345	WILLOW 345	1

2010 Heavy Summer Post-Project Base Case--Power Flow Study Results--Category C/D Outages																	
From	FromName	kV	To	ToName	kV	ck	Type	Rating	unit	PCT	Category	Outage_From	Outage_To	ck_O	Outage_From	Outage_To	ck_O
16902	FRISCO	230	16901	COPPERVR	230	1	L	1255	Amps	101	DT	GREEN-AE 345	GREENLEE 345	1	WINCHSTR 345	WILLOW 345	1
16900	COPPERVR	345	16901	COPPERVR	230	1	T	224	MVA	146	DT	GREEN-AE 345	GREENLEE 345	1	CORONADO 500	CORONADO 345	1
16900	COPPERVR	345	16901	COPPERVR	230	1	T	224	MVA	146	DT	GREEN-AE 345	GREENLEE 345	1	CORONADO 500	CORONADO 345	2
16900	COPPERVR	345	16901	COPPERVR	230	1	T	224	MVA	146	DT	GREEN-AE 345	GREENLEE 345	1	PINAL_W 500	PINALWES 345	1
16900	COPPERVR	345	16901	COPPERVR	230	1	T	224	MVA	144	DT	GREEN-AE 345	GREENLEE 345	1	WESTWING 500	WESTWING 345	1
16900	COPPERVR	345	16901	COPPERVR	230	1	T	224	MVA	143	DT	GREEN-AE 345	GREENLEE 345	1	BOWIE 345	BOWIE_G1 18	1
16900	COPPERVR	345	16901	COPPERVR	230	1	T	224	MVA	143	DT	GREEN-AE 345	GREENLEE 345	1	BOWIE 345	BOWIE_G2 18	1
16900	COPPERVR	345	16901	COPPERVR	230	1	T	224	MVA	142	DT	GREEN-AE 345	GREENLEE 345	1	BOWIE 345	BOWIE_S1 18	1
16900	COPPERVR	345	16901	COPPERVR	230	1	T	224	MVA	141	DT	GREEN-AE 345	GREENLEE 345	1	MCKINLEY 345	YAHTAHEY 115	1
16900	COPPERVR	345	16901	COPPERVR	230	1	T	224	MVA	144	DT	GREEN-AE 345	GREENLEE 345	1	SOUTH 345	SOUTH 138	1
16900	COPPERVR	345	16901	COPPERVR	230	1	T	224	MVA	144	DT	GREEN-AE 345	GREENLEE 345	1	SOUTH 345	SOUTH 138	2
16900	COPPERVR	345	16901	COPPERVR	230	1	T	224	MVA	142	DT	GREEN-AE 345	GREENLEE 345	1	SPRINGR 345	SPR GEN1 19	1
16900	COPPERVR	345	16901	COPPERVR	230	1	T	224	MVA	141	DT	GREEN-AE 345	GREENLEE 345	1	SPRINGR 345	SPR GEN2 19	1
16900	COPPERVR	345	16901	COPPERVR	230	1	T	224	MVA	141	DT	GREEN-AE 345	GREENLEE 345	1	SPRINGR 345	SPR GEN3 21	1
16900	COPPERVR	345	16901	COPPERVR	230	1	T	224	MVA	141	DT	GREEN-AE 345	GREENLEE 345	1	SPRINGR 345	SPR GEN4 21	1
16900	COPPERVR	345	16901	COPPERVR	230	1	T	224	MVA	140	DT	GREEN-AE 345	GREENLEE 345	1	VAIL 345	VAIL 138	1
16900	COPPERVR	345	16901	COPPERVR	230	1	T	224	MVA	145	DT	GREEN-AE 345	GREENLEE 345	1	VAIL2 345	VAIL 138	1
16900	COPPERVR	345	16901	COPPERVR	230	1	T	224	MVA	127	DT	GREEN-AE 345	GREENLEE 345	1	WINCHSTR 345	WINCHSTR 230	1
16900	COPPERVR	345	16901	COPPERVR	230	1	T	224	MVA	145	DT	GREEN-AE 345	GREENLEE 345	1	TORTOLIT 138	TORTLIT2 500	1
16900	COPPERVR	345	16901	COPPERVR	230	1	T	224	MVA	145	DT	GREEN-AE 345	GREENLEE 345	1	TORTOLIT 138	TORTOLIT 500	1
17009	GREEN-AE	230	17010	GREEN-AE	345	1	T	193	MVA	133	CT	GREENLEE 345	COPPERVR 345	1	GREENLEE 345	WILLOW 345	1
17009	GREEN-AE	230	17010	GREEN-AE	345	1	T	193	MVA	108	DT	GREENLEE 345	COPPERVR 345	1	SPRINGR 345	CORONADO 345	1
17009	GREEN-AE	230	17010	GREEN-AE	345	1	T	193	MVA	106	DT	GREENLEE 345	COPPERVR 345	1	SPRINGR 345	VAIL2 345	1
14350	ADAMS	115	17001	APACHE	115	1	L	663	Amps	105	DT	GREENLEE 345	COPPERVR 345	1	WINCHSTR 345	VAIL 345	1
17005	BICKNELL	345	17004	BICKNELL	230	1	T	193	MVA	134	DT	GREENLEE 345	COPPERVR 345	1	WINCHSTR 345	VAIL 345	1
17007	BUTERFLD	230	17002	APACHE	230	1	L	924	Amps	123	DT	GREENLEE 345	COPPERVR 345	1	WINCHSTR 345	VAIL 345	1
17547	SLOAN	230	17007	BUTERFLD	230	1	L	924	Amps	104	DT	GREENLEE 345	COPPERVR 345	1	WINCHSTR 345	VAIL 345	1
17010	GREEN-AE	345	17009	GREEN-AE	230	1	T	193	MVA	196	DT	GREENLEE 345	COPPERVR 345	1	WINCHSTR 345	WILLOW 345	1
17003	AVRA	115	17089	SNDARIO	115	1	L	396	Amps	104	DT	GREENLEE 345	WILLOW 345	1	PINALWES 345	SOUTH 345	1
17009	GREEN-AE	230	17010	GREEN-AE	345	1	T	193	MVA	146	DT	GREENLEE 345	WILLOW 345	1	PINALWES 345	SOUTH 345	1
17009	GREEN-AE	230	17010	GREEN-AE	345	1	T	193	MVA	155	DT	GREENLEE 345	WILLOW 345	1	SPRINGR 345	CORONADO 345	1
17009	GREEN-AE	230	17010	GREEN-AE	345	1	T	193	MVA	161	CT	GREENLEE 345	WILLOW 345	1	SPRINGR 345	VAIL2 345	1
17009	GREEN-AE	230	17010	GREEN-AE	345	1	T	193	MVA	145	CT	GREENLEE 345	WILLOW 345	1	WILLOW 345	BOWIE 345	1
14350	ADAMS	115	17001	APACHE	115	1	L	663	Amps	121	DT	GREENLEE 345	WILLOW 345	1	WINCHSTR 345	VAIL 345	1
17005	BICKNELL	345	17004	BICKNELL	230	1	T	193	MVA	162	DT	GREENLEE 345	WILLOW 345	1	WINCHSTR 345	VAIL 345	1
17007	BUTERFLD	230	17002	APACHE	230	1	L	924	Amps	143	DT	GREENLEE 345	WILLOW 345	1	WINCHSTR 345	VAIL 345	1
17016	PANTANO	230	17102	SAHUARIT	230	1	L	924	Amps	104	DT	GREENLEE 345	WILLOW 345	1	WINCHSTR 345	VAIL 345	1
17105	WINCHSTR	230	17002	APACHE	230	1	L	1210	Amps	106	DT	GREENLEE 345	WILLOW 345	1	WINCHSTR 345	VAIL 345	1
17547	SLOAN	230	17007	BUTERFLD	230	1	L	924	Amps	123	DT	GREENLEE 345	WILLOW 345	1	WINCHSTR 345	VAIL 345	1
17547	SLOAN	230	17016	PANTANO	230	1	L	924	Amps	115	DT	GREENLEE 345	WILLOW 345	1	WINCHSTR 345	VAIL 345	1

2010 Heavy Summer Post-Project Base Case--Power Flow Study Results--Category C/D Outages																	
From	FromName	kV	To	ToName	kV	ck	Type	Rating	unit	PCT	Category	Outage_From	Outage_To	ck_O	Outage_From	Outage_To	ck_O
16109	WINCHSTR	345	17105	WINCHSTR	230	1	T	420	MVA	119	DT	GREENLEE 345	WILLOW 345	1	WINCHSTR 345	VAIL 345	1
17009	GREEN-AE	230	17010	GREEN-AE	345	1	T	193	MVA	145	CT	GREENLEE 345	WILLOW 345	1	WINCHSTR 345	WILLOW 345	1
17009	GREEN-AE	230	17010	GREEN-AE	345	1	T	193	MVA	132	DT	GREENLEE 345	WILLOW 345	1	BOWIE 345	BOWIE_S1 18	1
17003	AVRA	115	17089	SNDARIO	115	1	L	396	Amps	100	DT	HIDALGO 345	GREENLEE 345	1	SPRINGR 345	GREENLEE 345	1
17005	BICKNELL	345	17004	BICKNELL	230	1	T	193	MVA	123	DT	HIDALGO 345	GREENLEE 345	1	WINCHSTR 345	VAIL 345	1
17007	BUTERFLD	230	17002	APACHE	230	1	L	924	Amps	116	DT	HIDALGO 345	GREENLEE 345	1	WINCHSTR 345	VAIL 345	1
17010	GREEN-AE	345	17009	GREEN-AE	230	1	T	193	MVA	187	DT	HIDALGO 345	GREENLEE 345	1	WINCHSTR 345	WILLOW 345	1
17005	BICKNELL	345	17004	BICKNELL	230	1	T	193	MVA	123	DT	MCKINLEY 345	SPRINGR 345	1	WINCHSTR 345	VAIL 345	1
17007	BUTERFLD	230	17002	APACHE	230	1	L	924	Amps	116	DT	MCKINLEY 345	SPRINGR 345	1	WINCHSTR 345	VAIL 345	1
17010	GREEN-AE	345	17009	GREEN-AE	230	1	T	193	MVA	186	DT	MCKINLEY 345	SPRINGR 345	1	WINCHSTR 345	WILLOW 345	1
12089	WINGATE	115	12017	CINIZA	115	1	L	482	Amps	102	DT	MCKINLEY 345	SPRINGR 345	1	MCKINLEY 345	YAHTAHEY 115	1
17005	BICKNELL	345	17004	BICKNELL	230	1	T	193	MVA	123	DT	MCKINLEY 345	SPRINGR 345	2	WINCHSTR 345	VAIL 345	1
17007	BUTERFLD	230	17002	APACHE	230	1	L	924	Amps	116	DT	MCKINLEY 345	SPRINGR 345	2	WINCHSTR 345	VAIL 345	1
17010	GREEN-AE	345	17009	GREEN-AE	230	1	T	193	MVA	186	DT	MCKINLEY 345	SPRINGR 345	2	WINCHSTR 345	WILLOW 345	1
17003	AVRA	115	17089	SNDARIO	115	1	L	396	Amps	111	DT	PINALWES 345	SOUTH 345	1	SPRINGR 345	GREENLEE 345	1
17003	AVRA	115	17089	SNDARIO	115	1	L	396	Amps	113	DT	PINALWES 345	SOUTH 345	1	SPRINGR 345	VAIL2 345	1
17003	AVRA	115	17089	SNDARIO	115	1	L	396	Amps	114	DT	PINALWES 345	SOUTH 345	1	WILLOW 345	BOWIE 345	1
17003	AVRA	115	17089	SNDARIO	115	1	L	396	Amps	125	DT	PINALWES 345	SOUTH 345	1	WINCHSTR 345	VAIL 345	1
17005	BICKNELL	345	17004	BICKNELL	230	1	T	193	MVA	177	DT	PINALWES 345	SOUTH 345	1	WINCHSTR 345	VAIL 345	1
17007	BUTERFLD	230	17002	APACHE	230	1	L	924	Amps	139	DT	PINALWES 345	SOUTH 345	1	WINCHSTR 345	VAIL 345	1
17016	PANTANO	230	17102	SAHUARIT	230	1	L	924	Amps	101	DT	PINALWES 345	SOUTH 345	1	WINCHSTR 345	VAIL 345	1
17547	SLOAN	230	17007	BUTERFLD	230	1	L	924	Amps	119	DT	PINALWES 345	SOUTH 345	1	WINCHSTR 345	VAIL 345	1
17547	SLOAN	230	17016	PANTANO	230	1	L	924	Amps	112	DT	PINALWES 345	SOUTH 345	1	WINCHSTR 345	VAIL 345	1
17003	AVRA	115	17089	SNDARIO	115	1	L	396	Amps	143	DT	PINALWES 345	SOUTH 345	1	WINCHSTR 345	WILLOW 345	1
17010	GREEN-AE	345	17009	GREEN-AE	230	1	T	193	MVA	228	DT	PINALWES 345	SOUTH 345	1	WINCHSTR 345	WILLOW 345	1
17012	MARANA	115	14356	SAG.EAST	115	1	L	924	Amps	106	DT	PINALWES 345	SOUTH 345	1	WINCHSTR 345	WILLOW 345	1
17089	SNDARIO	115	17022	THREEPNT	115	1	L	396	Amps	104	DT	PINALWES 345	SOUTH 345	1	WINCHSTR 345	WILLOW 345	1
17005	BICKNELL	345	17004	BICKNELL	230	1	T	193	MVA	122	DT	SAN_JUAN 345	MCKINLEY 345	1	WINCHSTR 345	VAIL 345	1
17007	BUTERFLD	230	17002	APACHE	230	1	L	924	Amps	116	DT	SAN_JUAN 345	MCKINLEY 345	1	WINCHSTR 345	VAIL 345	1
17010	GREEN-AE	345	17009	GREEN-AE	230	1	T	193	MVA	185	DT	SAN_JUAN 345	MCKINLEY 345	1	WINCHSTR 345	WILLOW 345	1
17005	BICKNELL	345	17004	BICKNELL	230	1	T	193	MVA	122	DT	SAN_JUAN 345	MCKINLEY 345	2	WINCHSTR 345	VAIL 345	1
17007	BUTERFLD	230	17002	APACHE	230	1	L	924	Amps	116	DT	SAN_JUAN 345	MCKINLEY 345	2	WINCHSTR 345	VAIL 345	1
17010	GREEN-AE	345	17009	GREEN-AE	230	1	T	193	MVA	185	DT	SAN_JUAN 345	MCKINLEY 345	2	WINCHSTR 345	WILLOW 345	1
16102	MCKINLEY	345	10382	YAHTAHEY	115	1	T	224	MVA	102	DT	SPRINGR 345	CORONADO 345	1	SPRINGR 345	GREENLEE 345	1
16102	MCKINLEY	345	10382	YAHTAHEY	115	1	T	224	MVA	102	DT	SPRINGR 345	CORONADO 345	1	SPRINGR 345	VAIL2 345	1
14350	ADAMS	115	17001	APACHE	115	1	L	663	Amps	117	DT	SPRINGR 345	CORONADO 345	1	WINCHSTR 345	VAIL 345	1
17005	BICKNELL	345	17004	BICKNELL	230	1	T	193	MVA	142	DT	SPRINGR 345	CORONADO 345	1	WINCHSTR 345	VAIL 345	1
17007	BUTERFLD	230	17002	APACHE	230	1	L	924	Amps	133	DT	SPRINGR 345	CORONADO 345	1	WINCHSTR 345	VAIL 345	1
17547	SLOAN	230	17007	BUTERFLD	230	1	L	924	Amps	113	DT	SPRINGR 345	CORONADO 345	1	WINCHSTR 345	VAIL 345	1
17547	SLOAN	230	17016	PANTANO	230	1	L	924	Amps	106	DT	SPRINGR 345	CORONADO 345	1	WINCHSTR 345	VAIL 345	1

2010 Heavy Summer Post-Project Base Case--Power Flow Study Results--Category C/D Outages																	
From	FromName	kV	To	ToName	kV	ck	Type	Rating	unit	PCT	Category	Outage_From	Outage_To	ck_O	Outage_From	Outage_To	ck_O
17010	GREEN-AE	345	17009	GREEN-AE	230	1	T	193	MVA	228	DT	SPRINGR 345	CORONADO 345	1	WINCHSTR 345	WILLOW 345	1
16102	MCKINLEY	345	10382	YAHTAHEY	115	1	T	224	MVA	100	DT	SPRINGR 345	CORONADO 345	1	WINCHSTR 345	WILLOW 345	1
17003	AVRA	115	17089	SNDARIO	115	1	L	396	Amps	103	DT	SPRINGR 345	GREENLEE 345	1	WILLOW 345	BOWIE 345	1
17005	BICKNELL	345	17004	BICKNELL	230	1	T	193	MVA	118	DT	SPRINGR 345	GREENLEE 345	1	WINCHSTR 345	VAIL 345	1
17007	BUTERFLD	230	17002	APACHE	230	1	L	924	Amps	113	DT	SPRINGR 345	GREENLEE 345	1	WINCHSTR 345	VAIL 345	1
17010	GREEN-AE	345	17009	GREEN-AE	230	1	T	193	MVA	183	DT	SPRINGR 345	GREENLEE 345	1	WINCHSTR 345	WILLOW 345	1
17005	BICKNELL	345	17004	BICKNELL	230	1	T	193	MVA	121	DT	SPRINGR 345	LUNA 345	1	WINCHSTR 345	VAIL 345	1
17007	BUTERFLD	230	17002	APACHE	230	1	L	924	Amps	115	DT	SPRINGR 345	LUNA 345	1	WINCHSTR 345	VAIL 345	1
17010	GREEN-AE	345	17009	GREEN-AE	230	1	T	193	MVA	184	DT	SPRINGR 345	LUNA 345	1	WINCHSTR 345	WILLOW 345	1
17010	GREEN-AE	345	17009	GREEN-AE	230	1	T	193	MVA	207	CT	SPRINGR 345	VAIL2 345	1	WINCHSTR 345	WILLOW 345	1
17005	BICKNELL	345	17004	BICKNELL	230	1	T	193	MVA	135	CT	SPRINGR 345	VAIL2 345	1	WINCHSTR 346	VAIL 345	1
17547	SLOAN	230	17007	BUTERFLD	230	1	L	924	Amps	103	CT	SPRINGR 346	VAIL2 346	1	WINCHSTR 347	VAIL 346	1
14350	ADAMS	115	17001	APACHE	115	1	L	663	Amps	103	CT	SPRINGR 347	VAIL2 347	1	WINCHSTR 348	VAIL 347	1
17007	BUTERFLD	230	17002	APACHE	230	1	L	924	Amps	122	CT	SPRINGR 348	VAIL2 348	1	WINCHSTR 349	VAIL 348	1
17005	BICKNELL	345	17004	BICKNELL	230	1	T	193	MVA	125	DT	VAIL 345	SOUTH 345	1	WINCHSTR 345	VAIL 345	1
17007	BUTERFLD	230	17002	APACHE	230	1	L	924	Amps	117	DT	VAIL 345	SOUTH 345	1	WINCHSTR 345	VAIL 345	1
17010	GREEN-AE	345	17009	GREEN-AE	230	1	T	193	MVA	184	DT	VAIL 345	SOUTH 345	1	WINCHSTR 345	WILLOW 345	1
14350	ADAMS	115	17001	APACHE	115	1	L	663	Amps	109	DT	VAIL 345	SOUTH 345	1	VAIL 345	VAIL 138	1
17005	BICKNELL	345	17004	BICKNELL	230	1	T	193	MVA	125	DT	WESTWING 345	PINALWES 345	1	WINCHSTR 345	VAIL 345	1
17007	BUTERFLD	230	17002	APACHE	230	1	L	924	Amps	117	DT	WESTWING 345	PINALWES 345	1	WINCHSTR 345	VAIL 345	1
17010	GREEN-AE	345	17009	GREEN-AE	230	1	T	193	MVA	187	DT	WESTWING 345	PINALWES 345	1	WINCHSTR 345	WILLOW 345	1
17009	GREEN-AE	230	17010	GREEN-AE	345	1	T	193	MVA	146	CT	WILLOW 345	BOWIE 345	1	WINCHSTR 345	WILLOW 345	1
17007	BUTERFLD	230	17002	APACHE	230	1	L	924	Amps	100	CT	WINCHSTR 345	VAIL 345	1	WINCHSTR 345	WILLOW 345	1
17009	GREEN-AE	230	17010	GREEN-AE	345	1	T	193	MVA	137	CT	WINCHSTR 345	VAIL 345	1	WINCHSTR 345	WILLOW 345	1
14350	ADAMS	115	17001	APACHE	115	1	L	663	Amps	101	DT	WINCHSTR 345	VAIL 345	1	CORONADO 500	CORONADO 345	1
17005	BICKNELL	345	17004	BICKNELL	230	1	T	193	MVA	125	DT	WINCHSTR 345	VAIL 345	1	CORONADO 500	CORONADO 345	1
17007	BUTERFLD	230	17002	APACHE	230	1	L	924	Amps	118	DT	WINCHSTR 345	VAIL 345	1	CORONADO 500	CORONADO 345	1
14350	ADAMS	115	17001	APACHE	115	1	L	663	Amps	101	DT	WINCHSTR 345	VAIL 345	1	CORONADO 500	CORONADO 345	2
17005	BICKNELL	345	17004	BICKNELL	230	1	T	193	MVA	125	DT	WINCHSTR 345	VAIL 345	1	CORONADO 500	CORONADO 345	2
17007	BUTERFLD	230	17002	APACHE	230	1	L	924	Amps	118	DT	WINCHSTR 345	VAIL 345	1	CORONADO 500	CORONADO 345	2
17005	BICKNELL	345	17004	BICKNELL	230	1	T	193	MVA	139	DT	WINCHSTR 345	VAIL 345	1	PINAL_W 500	PINALWES 345	1
17007	BUTERFLD	230	17002	APACHE	230	1	L	924	Amps	122	DT	WINCHSTR 345	VAIL 345	1	PINAL_W 500	PINALWES 345	1
17547	SLOAN	230	17007	BUTERFLD	230	1	L	924	Amps	103	DT	WINCHSTR 345	VAIL 345	1	PINAL_W 500	PINALWES 345	1
17005	BICKNELL	345	17004	BICKNELL	230	1	T	193	MVA	125	DT	WINCHSTR 345	VAIL 345	1	WESTWING 500	WESTWING 345	1
17007	BUTERFLD	230	17002	APACHE	230	1	L	924	Amps	117	DT	WINCHSTR 345	VAIL 345	1	WESTWING 500	WESTWING 345	1
17005	BICKNELL	345	17004	BICKNELL	230	1	T	193	MVA	113	DT	WINCHSTR 345	VAIL 345	1	BOWIE 345	BOWIE_G1 18	1
17007	BUTERFLD	230	17002	APACHE	230	1	L	924	Amps	110	DT	WINCHSTR 345	VAIL 345	1	BOWIE 345	BOWIE_G1 18	1
17005	BICKNELL	345	17004	BICKNELL	230	1	T	193	MVA	113	DT	WINCHSTR 345	VAIL 345	1	BOWIE 345	BOWIE_G2 18	1
17007	BUTERFLD	230	17002	APACHE	230	1	L	924	Amps	110	DT	WINCHSTR 345	VAIL 345	1	BOWIE 345	BOWIE_G2 18	1
17005	BICKNELL	345	17004	BICKNELL	230	1	T	193	MVA	109	DT	WINCHSTR 345	VAIL 345	1	BOWIE 345	BOWIE_S1 18	1

2010 Heavy Summer Post-Project Base Case--Power Flow Study Results--Category C/D Outages																		
From	FromName	kV	To	ToName	kV	ck	Type	Rating	unit	PCT	Category	Outage_From	Outage_To	ck_O	Outage_From	Outage_To	ck_O
17007	BUTERFLD	230	17002	APACHE	230	1	L	924	Amps	107	DT	WINCHSTR 345	VAIL 345	1	BOWIE 345	BOWIE_S1 18	1
17005	BICKNELL	345	17004	BICKNELL	230	1	T	193	MVA	121	DT	WINCHSTR 345	VAIL 345	1	SOUTH 345	SOUTH 138	1
17007	BUTERFLD	230	17002	APACHE	230	1	L	924	Amps	116	DT	WINCHSTR 345	VAIL 345	1	SOUTH 345	SOUTH 138	1
17005	BICKNELL	345	17004	BICKNELL	230	1	T	193	MVA	121	DT	WINCHSTR 345	VAIL 345	1	SOUTH 345	SOUTH 138	2
17007	BUTERFLD	230	17002	APACHE	230	1	L	924	Amps	116	DT	WINCHSTR 345	VAIL 345	1	SOUTH 345	SOUTH 138	2
17005	BICKNELL	345	17004	BICKNELL	230	1	T	193	MVA	118	DT	WINCHSTR 345	VAIL 345	1	SPRINGR 345	SPR GEN1 19	1
17007	BUTERFLD	230	17002	APACHE	230	1	L	924	Amps	113	DT	WINCHSTR 345	VAIL 345	1	SPRINGR 345	SPR GEN1 19	1
17005	BICKNELL	345	17004	BICKNELL	230	1	T	193	MVA	118	DT	WINCHSTR 345	VAIL 345	1	SPRINGR 345	SPR GEN2 19	1
17007	BUTERFLD	230	17002	APACHE	230	1	L	924	Amps	113	DT	WINCHSTR 345	VAIL 345	1	SPRINGR 345	SPR GEN2 19	1
17005	BICKNELL	345	17004	BICKNELL	230	1	T	193	MVA	118	DT	WINCHSTR 345	VAIL 345	1	SPRINGR 345	SPR GEN3 21	1
17007	BUTERFLD	230	17002	APACHE	230	1	L	924	Amps	112	DT	WINCHSTR 345	VAIL 345	1	SPRINGR 345	SPR GEN3 21	1
17005	BICKNELL	345	17004	BICKNELL	230	1	T	193	MVA	118	DT	WINCHSTR 345	VAIL 345	1	SPRINGR 345	SPR GEN4 21	1
17007	BUTERFLD	230	17002	APACHE	230	1	L	924	Amps	112	DT	WINCHSTR 345	VAIL 345	1	SPRINGR 345	SPR GEN4 21	1
17007	BUTERFLD	230	17002	APACHE	230	1	L	924	Amps	106	CT	WINCHSTR 345	VAIL 345	1	VAIL 345	VAIL 138	1
14350	ADAMS	115	17001	APACHE	115	1	L	663	Amps	100	DT	WINCHSTR 345	VAIL 345	1	VAIL2 345	VAIL 138	1
17005	BICKNELL	345	17004	BICKNELL	230	1	T	193	MVA	125	DT	WINCHSTR 345	VAIL 345	1	VAIL2 345	VAIL 138	1
17007	BUTERFLD	230	17002	APACHE	230	1	L	924	Amps	117	DT	WINCHSTR 345	VAIL 345	1	VAIL2 345	VAIL 138	1
17007	BUTERFLD	230	17002	APACHE	230	1	L	924	Amps	100	CT	WINCHSTR 345	VAIL 345	1	WINCHSTR 345	WINCHSTR 230	1
17009	GREEN-AE	230	17010	GREEN-AE	345	1	T	193	MVA	137	CT	WINCHSTR 345	VAIL 345	1	WINCHSTR 345	WINCHSTR 230	1
17005	BICKNELL	345	17004	BICKNELL	230	1	T	193	MVA	117	DT	WINCHSTR 345	VAIL 345	1	TORTOLIT 138	TORTLIT2 500	1
17007	BUTERFLD	230	17002	APACHE	230	1	L	924	Amps	111	DT	WINCHSTR 345	VAIL 345	1	TORTOLIT 138	TORTLIT2 500	1
17005	BICKNELL	345	17004	BICKNELL	230	1	T	193	MVA	117	DT	WINCHSTR 345	VAIL 345	1	TORTOLIT 138	TORTOLIT 500	1
17007	BUTERFLD	230	17002	APACHE	230	1	L	924	Amps	111	DT	WINCHSTR 345	VAIL 345	1	TORTOLIT 138	TORTOLIT 500	1
17010	GREEN-AE	345	17009	GREEN-AE	230	1	T	193	MVA	190	DT	WINCHSTR 345	WILLOW 345	1	CORONADO 500	CORONADO 345	1
17010	GREEN-AE	345	17009	GREEN-AE	230	1	T	193	MVA	190	DT	WINCHSTR 345	WILLOW 345	1	CORONADO 500	CORONADO 345	2
17003	AVRA	115	17089	SNDARIO	115	1	L	396	Amps	106	DT	WINCHSTR 345	WILLOW 345	1	PINAL_W 500	PINALWES 345	1
17010	GREEN-AE	345	17009	GREEN-AE	230	1	T	193	MVA	195	DT	WINCHSTR 345	WILLOW 345	1	PINAL_W 500	PINALWES 345	1
17010	GREEN-AE	345	17009	GREEN-AE	230	1	T	193	MVA	187	DT	WINCHSTR 345	WILLOW 345	1	WESTWING 500	WESTWING 345	1
17010	GREEN-AE	345	17009	GREEN-AE	230	1	T	193	MVA	175	DT	WINCHSTR 345	WILLOW 345	1	BOWIE 345	BOWIE_G1 18	1
17010	GREEN-AE	345	17009	GREEN-AE	230	1	T	193	MVA	175	DT	WINCHSTR 345	WILLOW 345	1	BOWIE 345	BOWIE_G2 18	1
17010	GREEN-AE	345	17009	GREEN-AE	230	1	T	193	MVA	169	DT	WINCHSTR 345	WILLOW 345	1	BOWIE 345	BOWIE_S1 18	1
17010	GREEN-AE	345	17009	GREEN-AE	230	1	T	193	MVA	185	DT	WINCHSTR 345	WILLOW 345	1	SOUTH 345	SOUTH 138	1
17010	GREEN-AE	345	17009	GREEN-AE	230	1	T	193	MVA	185	DT	WINCHSTR 345	WILLOW 345	1	SOUTH 345	SOUTH 138	2
17010	GREEN-AE	345	17009	GREEN-AE	230	1	T	193	MVA	177	DT	WINCHSTR 345	WILLOW 345	1	SPRINGR 345	SPR GEN1 19	1
17010	GREEN-AE	345	17009	GREEN-AE	230	1	T	193	MVA	177	DT	WINCHSTR 345	WILLOW 345	1	SPRINGR 345	SPR GEN2 19	1
17010	GREEN-AE	345	17009	GREEN-AE	230	1	T	193	MVA	176	DT	WINCHSTR 345	WILLOW 345	1	SPRINGR 345	SPR GEN3 21	1
17010	GREEN-AE	345	17009	GREEN-AE	230	1	T	193	MVA	176	DT	WINCHSTR 345	WILLOW 345	1	SPRINGR 345	SPR GEN4 21	1
17010	GREEN-AE	345	17009	GREEN-AE	230	1	T	193	MVA	174	DT	WINCHSTR 345	WILLOW 345	1	VAIL 345	VAIL 138	1
17010	GREEN-AE	345	17009	GREEN-AE	230	1	T	193	MVA	188	DT	WINCHSTR 345	WILLOW 345	1	VAIL2 345	VAIL 138	1
17007	BUTERFLD	230	17002	APACHE	230	1	L	924	Amps	100	CT	WINCHSTR 345	WILLOW 345	1	WINCHSTR 345	WINCHSTR 230	1
17009	GREEN-AE	230	17010	GREEN-AE	345	1	T	193	MVA	137	CT	WINCHSTR 345	WILLOW 345	1	WINCHSTR 345	WINCHSTR 230	1
17010	GREEN-AE	345	17009	GREEN-AE	230	1	T	193	MVA	181	DT	WINCHSTR 345	WILLOW 345	1	TORTOLIT 138	TORTLIT2 500	1
17010	GREEN-AE	345	17009	GREEN-AE	230	1	T	193	MVA	181	DT	WINCHSTR 345	WILLOW 345	1	TORTOLIT 138	TORTOLIT 500	1
17003	AVRA	115	17089	SNDARIO	115	1	L	396	Amps	111	DT	TORTOLIT 138	TORTLIT2 500	1	TORTOLIT 138	TORTOLIT 500	1
17009	GREEN-AE	230	17010	GREEN-AE	345	1	T	193	MVA	145	DT	WILLOW 345	WINCHSTR 345	1	WILLOW 345	GREENLEE 345	1