ORIGINAL

0000092258

RECEIVED

2009 JAN -7 P 4: 38

AZ CORP COMMISSION
DOCKET CONTROL

FENNEMORE CRAIG, P.C.
A Professional Corporation
C. Webb Crockett (AZ #001361)
Patrick J. Black (AZ #017141)
3003 North Central Avenue, Suite 2600
Phoenix, Arizona 85012
Telephone: (602) 916-5333
Facsimile: (602) 916-5533
Attorneys for Ajo Improvement Company

BEFORE THE ARIZONA CORPORATION COMMISSION

IN THE MATTER OF THE APPLICATION OF AJO IMPROVEMENT COMPANY FOR APPROVAL OF AN EXTENSION OF ITS CERTIFICATE OF ENVIRONMENTAL COMPATIBILITY TO BUILD A TRANSMISSION LINE FROM GILA BEND TO AJO	DOCKET NO: L-00000G-97-0089 **SUPPLEMENT TO THE AJO IMPROVEMENT COMPANY TEN-YEAR PLAN FOR THE YEAR 2008**

In connection with the above referenced matter and pursuant to the provisions of A.R.S. 40-360.02(A) and (C), Ajo Improvement Company ("AIC") hereby supplements its Ten-Year Plan for the Year 2008 with the "Ajo Improvement Company Ten Year Plan Power Flow and Stability Analysis" report dated November 20, 2008, which was prepared by the Transmission Planning Department of Arizona Public Service Company on behalf of AIC.

If the Arizona Corporation Commission requires any additional information with regard to the Power Flow and Stability Analysis or with the AIC Ten-Year Plan for the Year 2008 report, please let us know.

RESPECTFULLY SUBMITTED this 7th day of January 2009.

FENNEMORE CRAIG

By C. Webb Crockett
C. Webb Crockett
Patrick J. Black
3003 North Central Avenue, Suite 2600
Phoenix, Arizona 85012
Attorneys for Ajo Improvement Company

Arizona Corporation Commission
DOCKETED
JAN - 7 2009
DOCKETED BY MN

ORIGINAL and **13 copies** of the foregoing, were filed this 7th day of January 2008 with:

Docket Control Division
Arizona Corporation Commission
1200 W. Washington St.
Phoenix, AZ 85007

COPY of the foregoing **HAND-DELIVERED** this 7th day of January 2008 to:

Charles Henry Hains, Esq.
Arizona Corporation Commission
Legal Division
1200 West Washington Street
Phoenix, Arizona 850097-2927

By: Mary Bollington

2143492.1/74326.863

A subsidiary of Pinnacle West Capital Corporation

AJO Improvement Company Ten Year Plan Power Flow and Stability Analysis

By
Transmission Planning, APS
November 20, 2008

Executive Summary

Ajo Improvement Company (AIC) is an Arizona utility company that anticipates constructing and operating electric transmission facilities between Gila Bend and Ajo, Arizona. Such facilities, if constructed, would provide electric service to the Freeport-McMoRan Copper and Gold Inc. (FMI) New Cornelia Branch Copper mine. On April 30th, 1998, AIC obtained an Arizona Corporation Commission (ACC) approved Certificate of Environmental Capability to construct a 47 mile 230kV transmission line from Gila Bend to Ajo. The anticipated construction date for this transmission line is December 31st, 2010. The expected peak load for the mine located at Ajo is 90 MW.

A power flow and stability study has determined that the associated AIC project with a 47 mile 230 kV circuit from Gila Bend to Ajo, with a 90 MW load at Ajo does has no power flow or stability violations. These results are to be incorporated into an AIC ten year plan to be filed annually to the ACC until the transmission circuit is built, or the project is permanently cancelled.

Contents **Page**

Introduction 1
Study Objectives 1
Study Methodology 1
Study Results 2
    Power Flow 2
    Stability 2
Conclusion 3

Appendix A
Appendix B

Introduction

Ajo Improvement Company (AIC) is an Arizona utility company that anticipates constructing and operating electric transmission facilities between Gila Bend and Ajo, Arizona. Such facilities, if constructed, would provide electric service to the Freeport-McMoRan Copper and Gold Inc. (FMI) New Cornelia Branch Copper mine. On April 30th, 1998, AIC obtained an Arizona Corporation Commission (ACC) approved Certificate of Environmental Capability to construct a 47 mile 230kV transmission line from Gila Bend to Ajo. The anticipated construction date for this transmission line is December 31st, 2010. The expected peak load for the mine located at Ajo is 90 MW.

In this report, results from a power flow and stability study are shown. These results are to be incorporated into an AIC ten year plan to be filed annually to the ACC until the transmission circuit is built, or the project is permanently cancelled.

Study Objectives

The main objective of this study was to determine if there were any power flow or stability issues associated with a new 47 mile circuit from Gila Bend to Ajo, and the associated 90MW load to be located at Ajo.

Study Methodology

High-level power flow was performed to evaluate the impact of the proposed project on the existing transmission and sub-transmission system. The study focused on the following WECC/NERC Category B and C outages:

- All single generator outages within the vicinity of the project (APS and non-APS)
- All single (230-500 kV) transmission outages within the vicinity of the project (APS and non-APS)
- All single transformer outages within the vicinity of the project (APS and non-APS)
- Any applicable worse case N-1-1 contingencies within the vicinity of the project (APS and non-APS)

The applicable contingencies are listed in Table I.

Power flow and stability analysis are performed on the following cases:

- Power Flow: 2011 APS Heavy Summer Detailed Case
- Stability: 2013 West Connect Heavy Summer Case

In each case, the 47 mile 230kV circuit from Gila Bend to Ajo, and a 90 MW load with 0.95 power factor at Ajo are modeled.

Table I
Contingencies Studied

Circuit Outage
Gila River - Jojoba 500kV
Gila River – TS4 230kV
Jojoba - Kyrene 230kV
Jojoba - Hassayampa 500kV
Gila River 500/230 kV Transformer
Gila River 2 Generator Outage
Gila Bend - Ajo 230kV Circuit
Gila River - Jojoba 500kV N-1-1 Outage
Gila River – TS4 – Palm Valley 230kV Outage

Study Results

Power Flow

High level power flow results for each of the selected contingences are shown in Table II. With the projects in service, there are no post transient or thermal violations. The manual system adjustments for the N-1-1 outage of the two Jojoba – Gila River 500kV circuits are necessary to meet NERC Category C contingency criteria, and this result is not impacted nor a result of the associated AIC project. Detailed power flow diagrams for each outage are shown in Appendix A.

Table II
Power Flow Results

Circuit Outage	Overloaded Elements	Post Transient Voltage Violations	Manual System Adjustments
Gila River - Jojoba 500kV	None	None	None
Gila River – TS4 230kV	None	None	None
Jojoba - Kyrene 230kV	None	None	None
Jojoba - Hassayampa 500kV	None	None	None
Gila River 500/230 kV Transformer	None	None	None
Gila River 2 Generator Outage	None	None	None
Gila Bend - Ajo 230kV Circuit	None	None	None
Gila River - Jojoba 500kV N-1-1 Outage	None	None	1600 MW Generation Drop at Gila River
Gila River – TS4 – Palm Valley 230kV Outage	None	None	None

Stability

High level stability results for each of the selected contingences are shown in Table III. With the projects in service, there are no NERC Category B or C stability violations. Stability plots for each of the contingencies are shown in Appendix B.

Table III
Stability Results

Circuit Outage	Transient Voltage Dip Violations	Transient Frequency Dip Violations	Post Transient Voltage Violations	Damping
Gila River - Jojoba 500kV	None	None	None	>0
Gila River – TS4 230kV	None	None	None	>0
Jojoba - Kyrene 230kV	None	None	None	>0
Jojoba - Hassayampa 500kV	None	None	None	>0
Gila River 500/230 kV Transformer	None	None	None	>0
Gila River 2 Generator Outage	None	None	None	>0
Gila Bend - Ajo 230kV Circuit	None	None	None	>0
Gila River - Jojoba 500kV N-1-1 Outage	None	None	None	>0
Gila River – TS4 – Palm Valley 230kV Outage	None	None	None	>0

Conclusion

This power flow and stability study has determined that the associated AIC project with a 47 mile 230 kV circuit from Gila Bend to Ajo, with a 90 MW load at Ajo does has no power flow or stability violations.

Appendix A

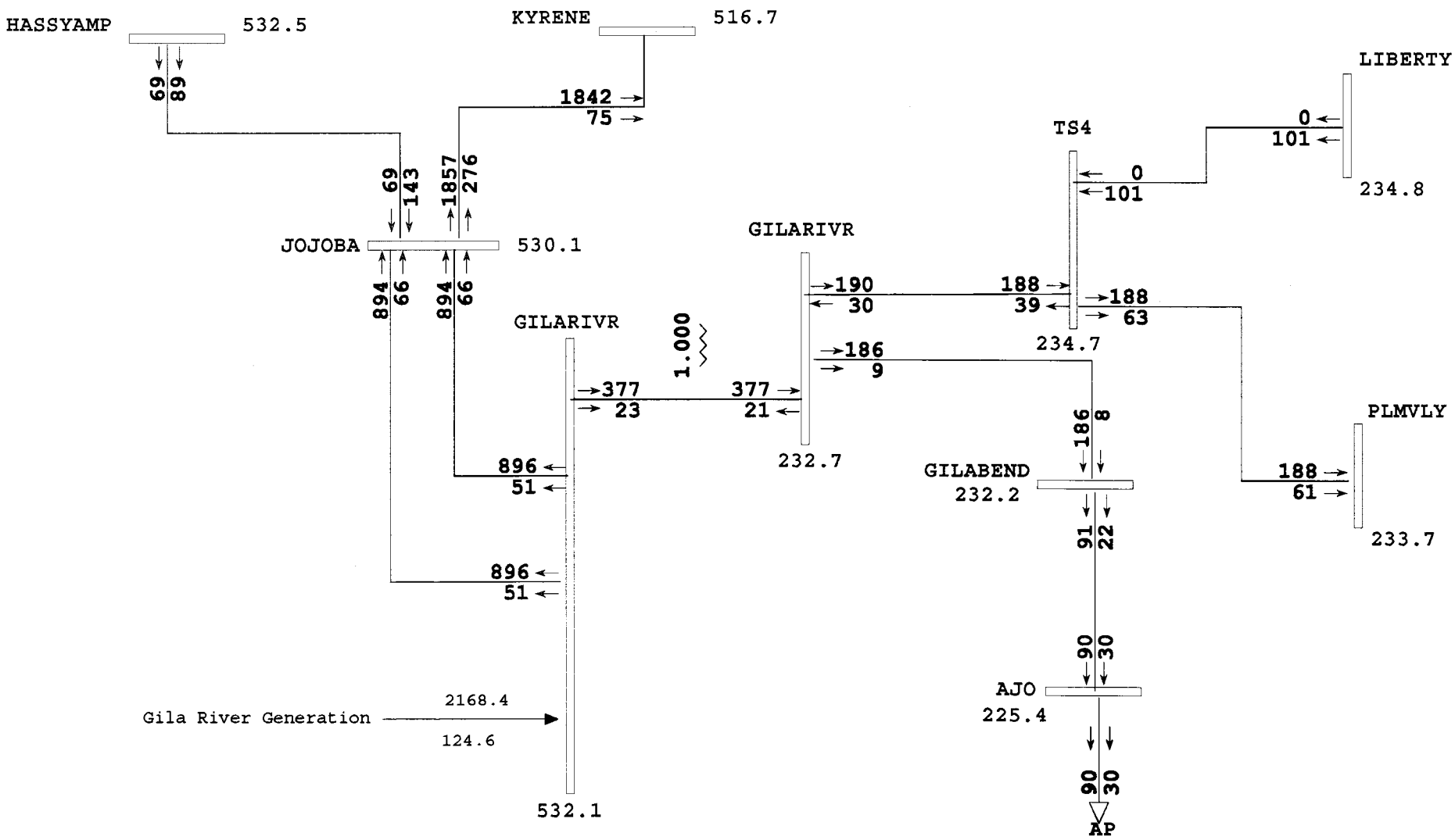

Gila River Transmisison System with Ajo Load
Base Case

General Electric International, Inc. PSLF Program Thu Nov 20 12:42:06 2008 c:\batch_runs\sm11#09_ajo.sav

	2011 Planning case 2008 SUMMER BASE CASE updated for 2009 2008vopr16.sav	7/23/2008	MW/MVAR ajo.drw Rating = 1

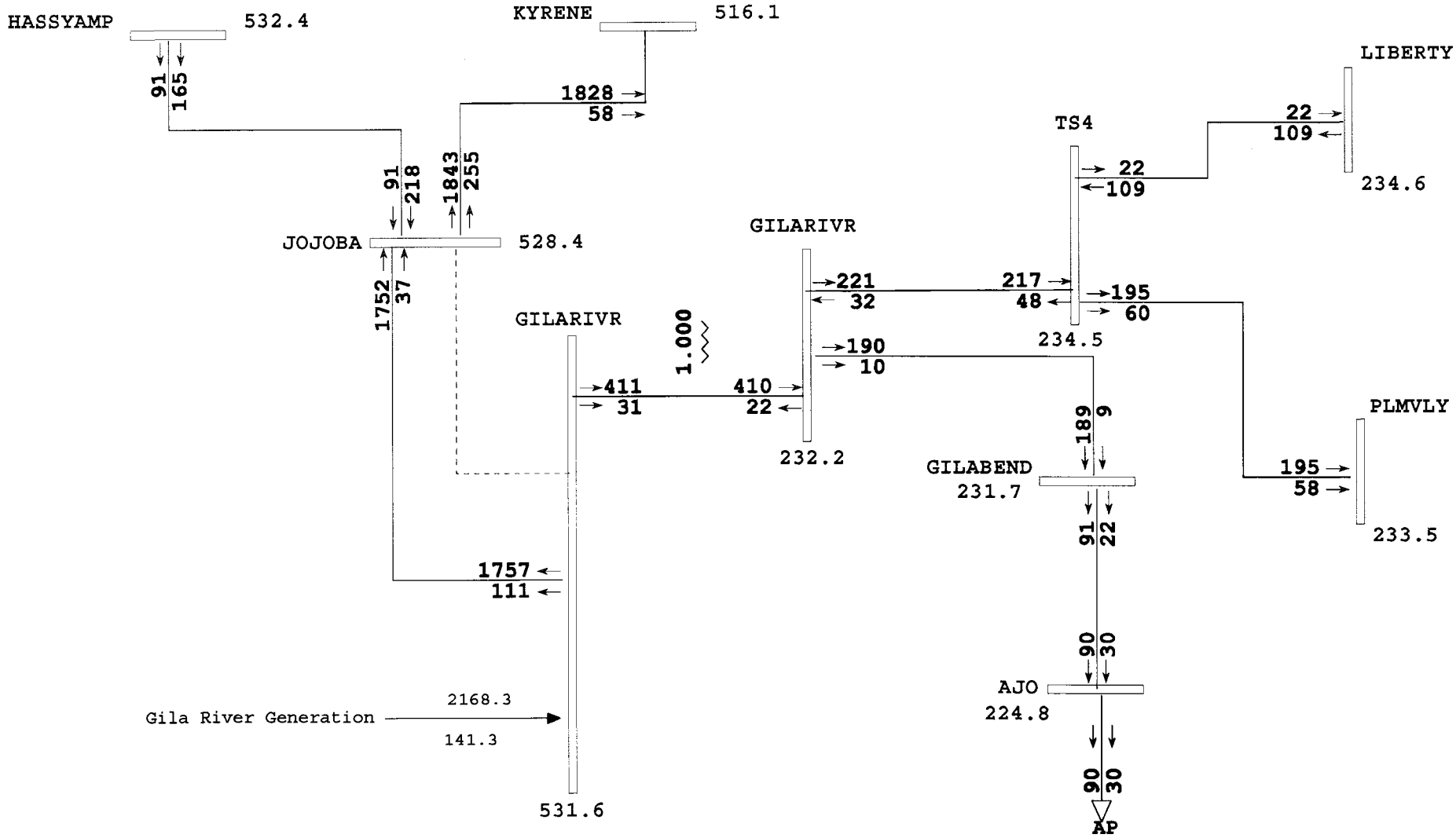

Gila River Transmisison System with Ajo Load
GIla River - Jojoba 500kV Outage

General Electric International, Inc. PSLF Program Thu Nov 20 12:43:29 2008 c:\batch_runs\sm11#09_ajo.sav

	2011 Planning case 2008 SUMMER BASE CASE updated for 2009 2008vopr16.sav	7/23/2008	MW/MVAR ajo.drw Rating = 1

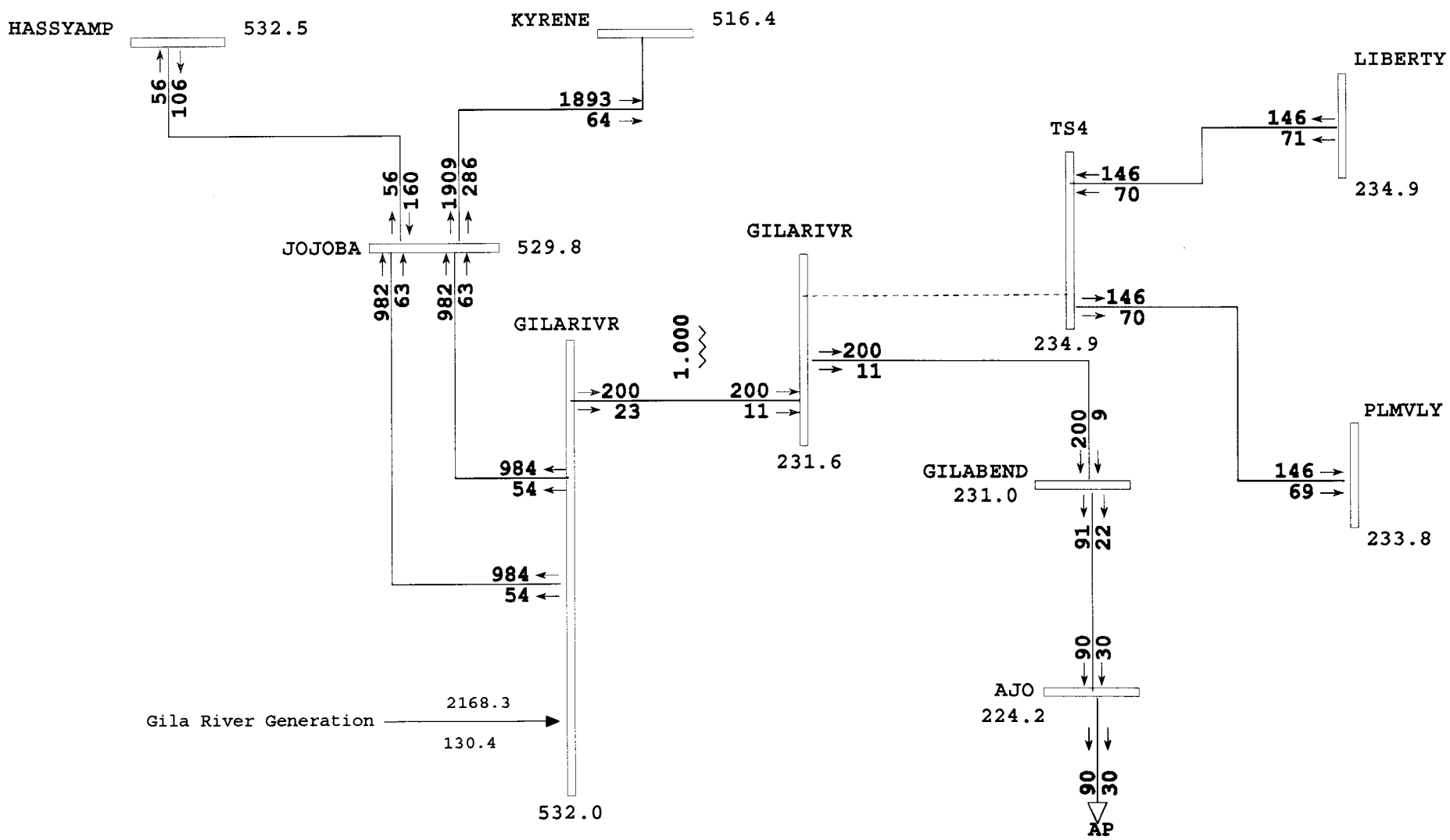

Gila River Transmisison System with Ajo Load
GIla River - TS4 230 kV Outage

General Electric International, Inc. PSLF Program Thu Nov 20 12:44:46 2008 c:\batch_runs\sm11#09_ajo.sav

	2011 Planning case 2008 SUMMER BASE CASE updated for 2009 2008vopr16.sav	7/23/2008	MW/MVAR ajo.drw Rating = 1

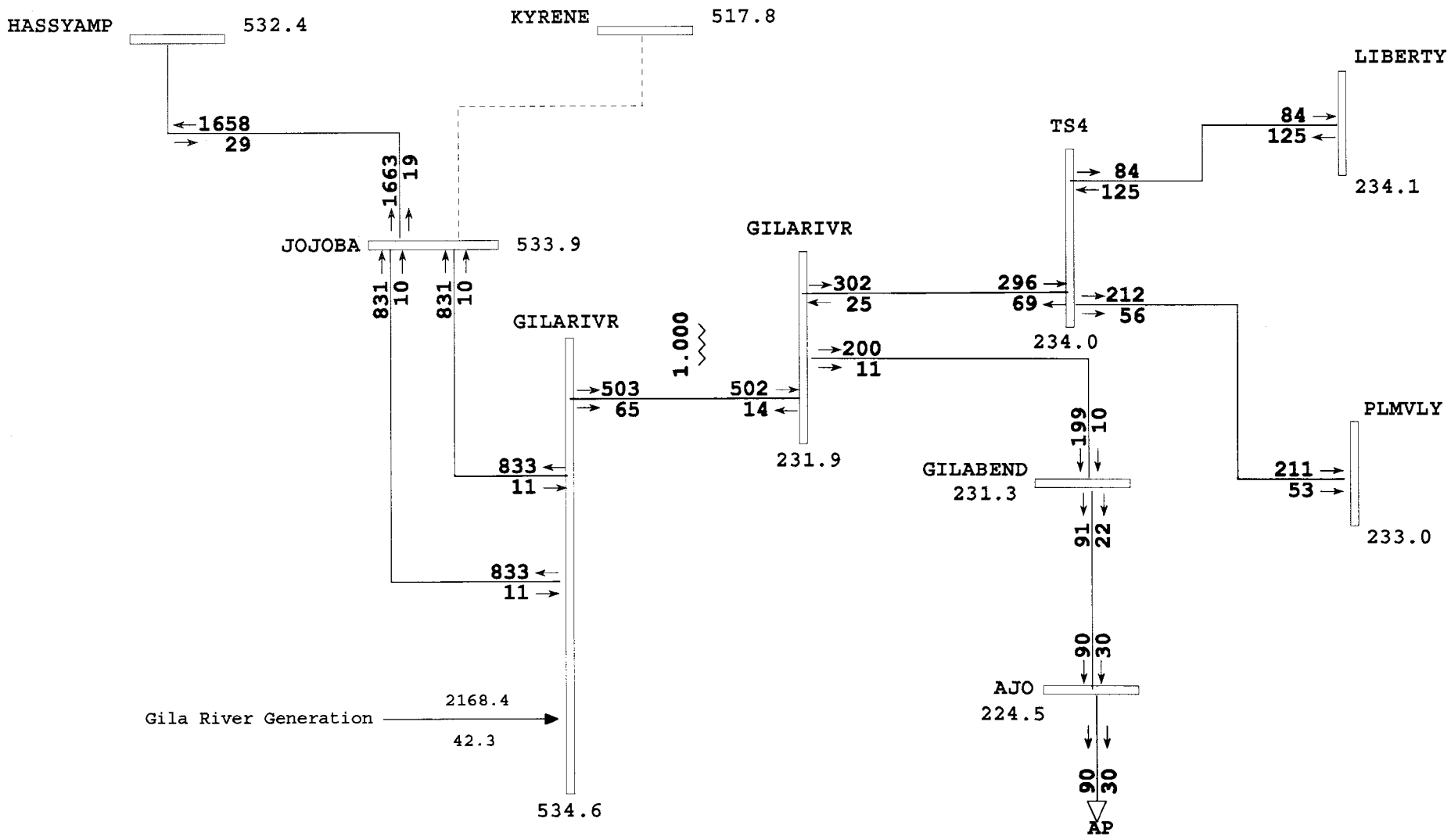

Gila River Transmisison System with Ajo Load
Jojoba - Kyrene 500 kV Outage

General Electric International, Inc. PSLF Program Thu Nov 20 12:46:25 2008 c:\batch_runs\sm11#09_ajo.sav

	2011 Planning case 2008 SUMMER BASE CASE updated for 2009 2008vopr16.sav	7/23/2008	MW/MVAR ajo.drw Rating = 1

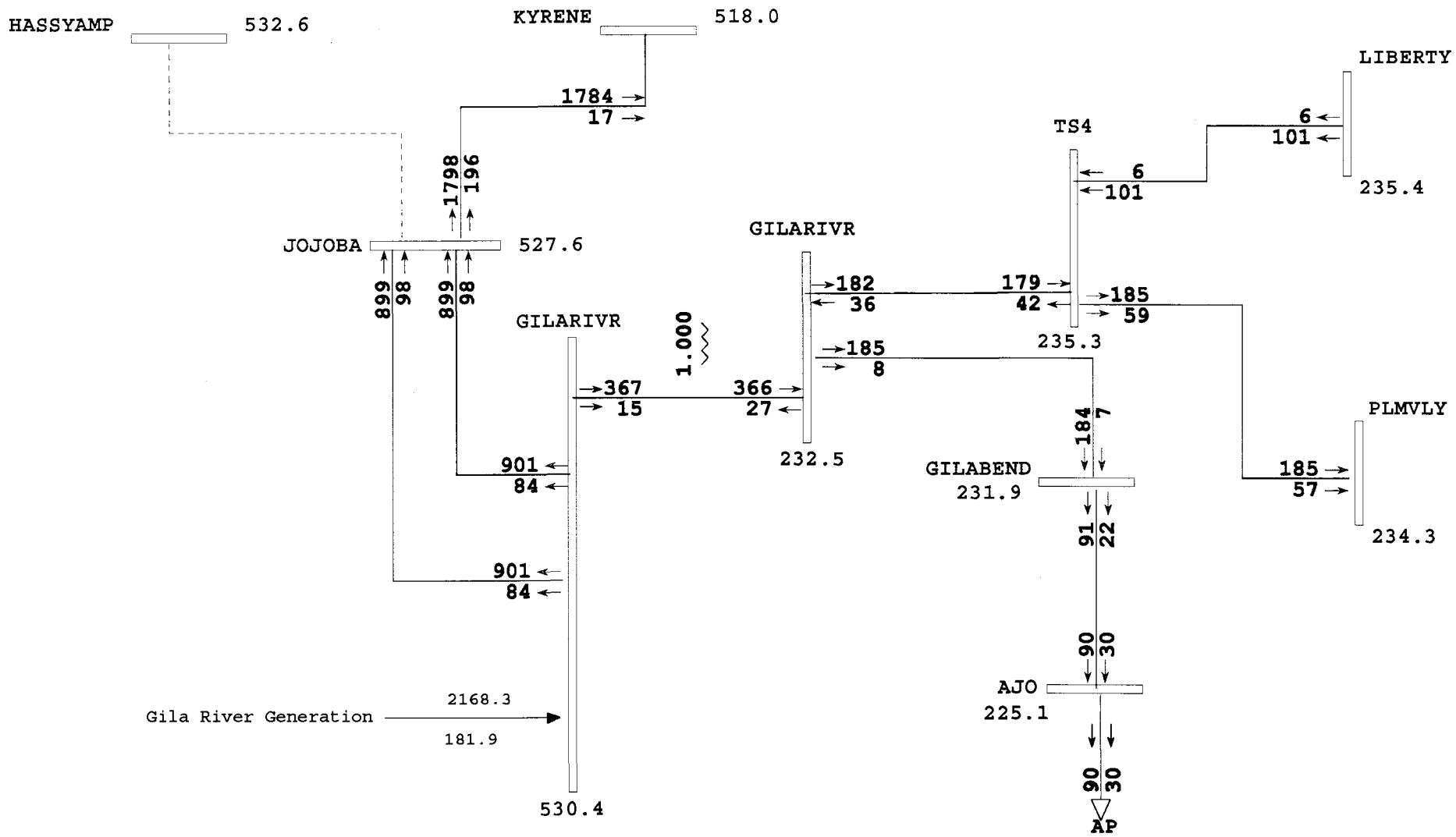

Gila River Transmisison System with Ajo Load
Jojoba - Hassayampa 500 kV Outage

General Electric International, Inc. PSLF Program Thu Nov 20 12:47:29 2008 c:\batch_runs\sm11#09_ajo.sav

	2011 Planning case 2008 SUMMER BASE CASE updated for 2009 2008vopr16.sav	7/23/2008	MW/MVAR ajo.drw Rating = 1

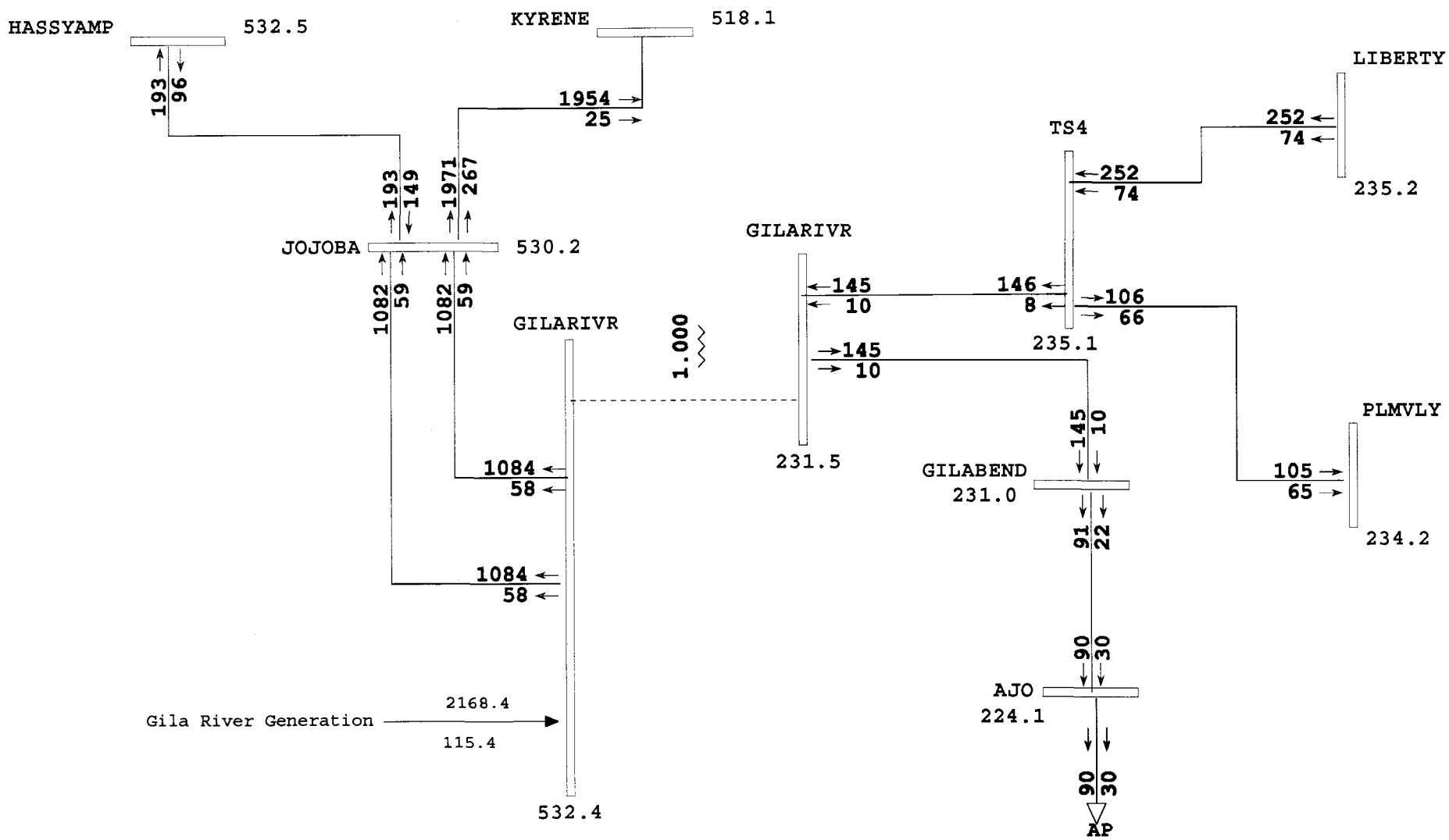

Gila River Transmisison System with Ajo Load
Gila River 500/230 kV Transformer Outage

General Electric International, Inc. PSLF Program Thu Nov 20 12:48:35 2008 c:\batch_runs\sm11#09_ajo.sav

	2011 Planning case 2008 SUMMER BASE CASE updated for 2009 2008vopr16.sav	7/23/2008	MW/MVAR ajo.drw Rating = 1

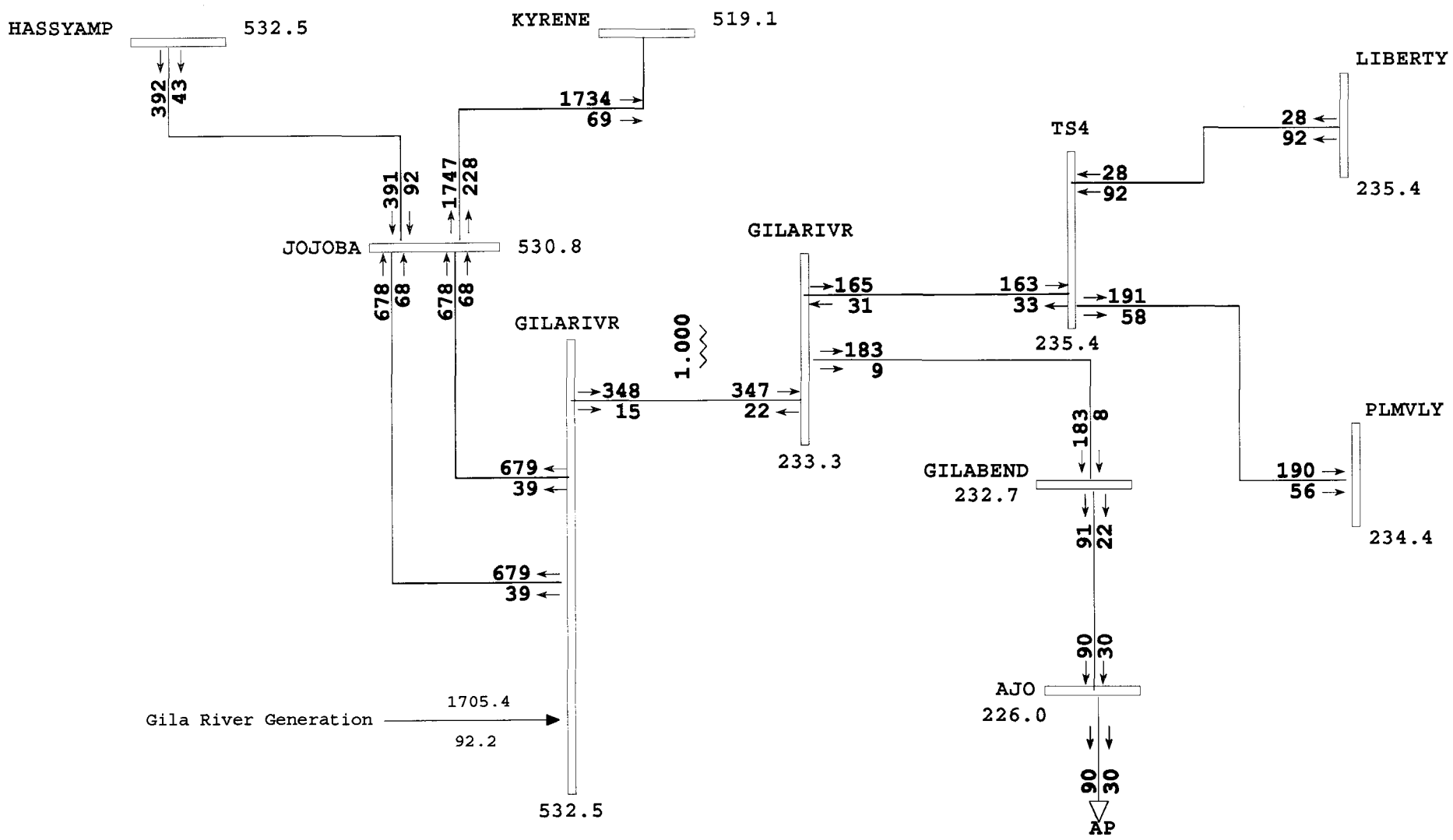

Gila River Transmisison System with Ajo Load
Gila River 2 Generator Outage

General Electric International, Inc. PSLF Program Thu Nov 20 12:49:52 2008 c:\batch_runs\sm11#09_ajo.sav

	2011 Planning case 2008 SUMMER BASE CASE updated for 2009 2008vopr16.sav	7/23/2008	MW/MVAR ajo.drw Rating = 1

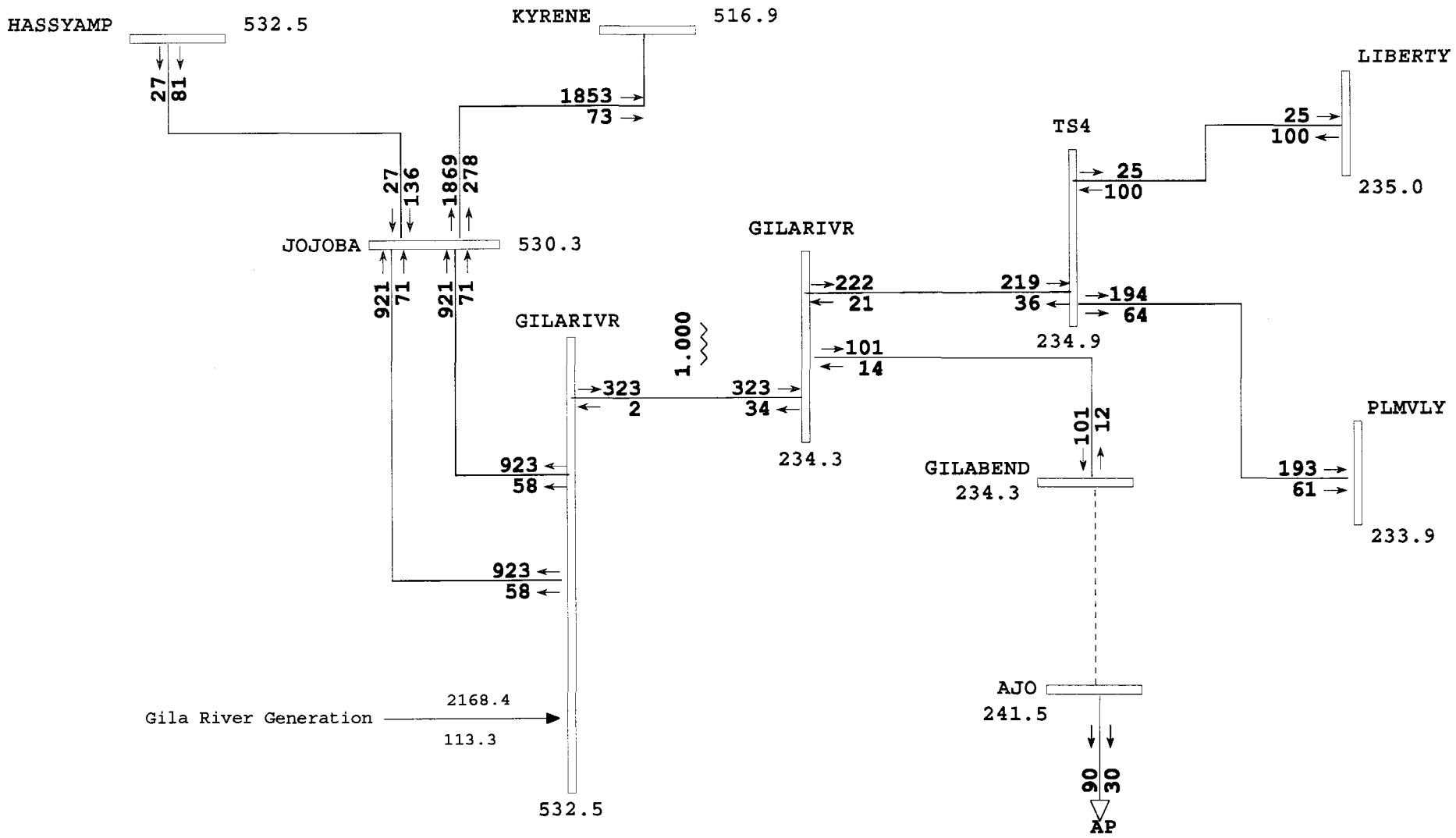

Gila River Transmisison System with Ajo Load
Gila Bend - Ajo 230 kV Outage

General Electric International, Inc. PSLF Program Thu Nov 20 12:51:06 2008 c:\batch_runs\sm11#09_ajo.sav

	2011 Planning case 2008 SUMMER BASE CASE updated for 2009 2008vopr16.sav	7/23/2008	MW/MVAR ajo.drw Rating = 1

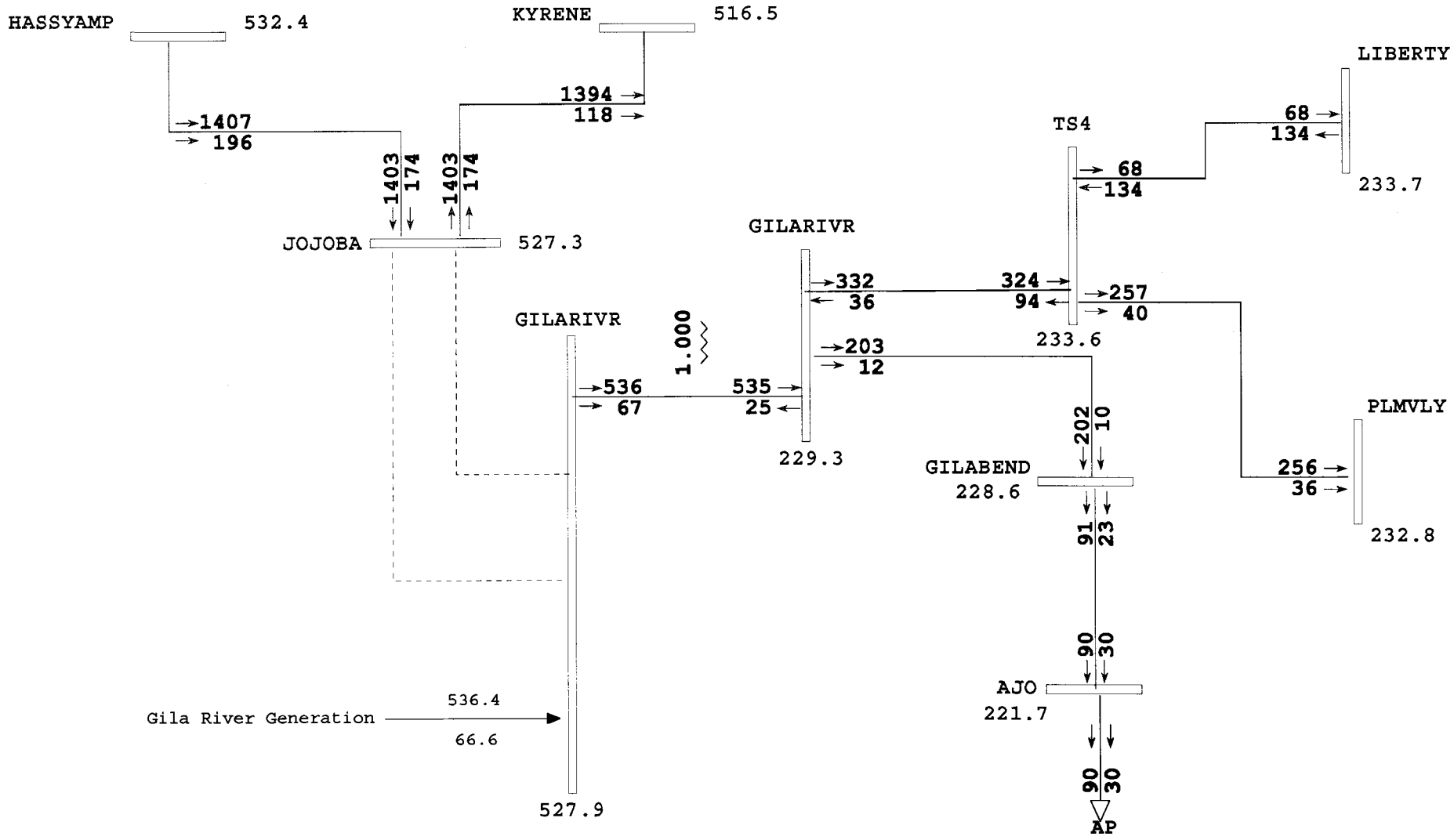

Gila River Transmisison System with Ajo Load
Gila River - Jojoba 500kV Double Line Outage

General Electric International, Inc. PSLF Program Thu Nov 20 12:53:33 2008 c:\batch_runs\sm11#09_ajo_grjj2line.sav

	2011 Planning case 2008 SUMMER BASE CASE updated for 2009 2008vopr16.sav	7/23/2008	MW/MVAR ajo.drw Rating = 2

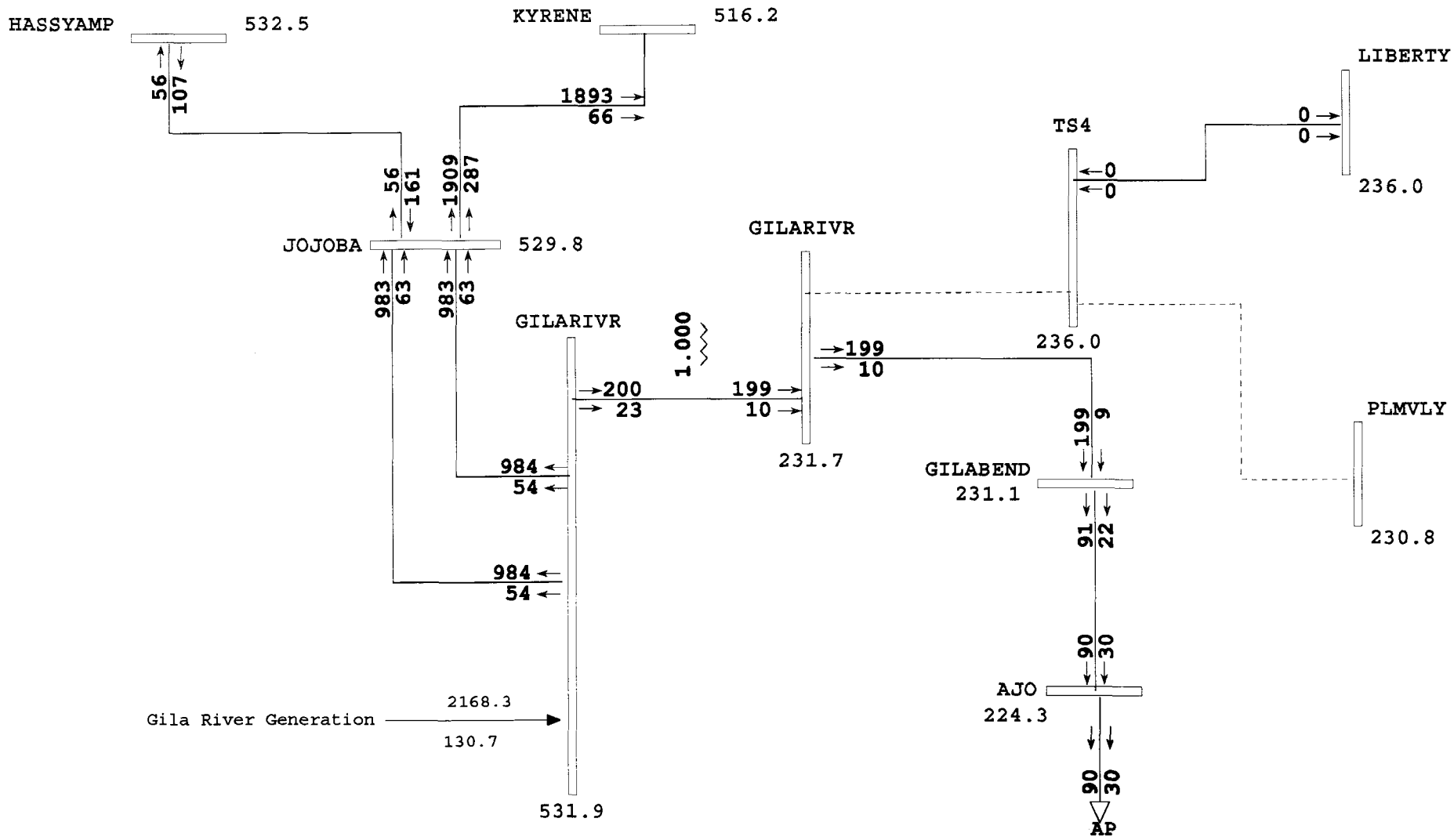

Gila River Transmisison System with Ajo Load
Gila River - TS4 - Palm Valley 230kV Outage

General Electric International, Inc. PSLF Program Thu Nov 20 12:52:27 2008 c:\batch_runs\sm11#09_ajo.sav

	2011 Planning case 2008 SUMMER BASE CASE updated for 2009 2008vopr16.sav	7/23/2008	MW/MVAR ajo.drw Rating = 1

Appendix B

2009 APS Ten Year Plan
2013 Heavy Summer WECC/WestConnect Case/FMI AJO LOAD

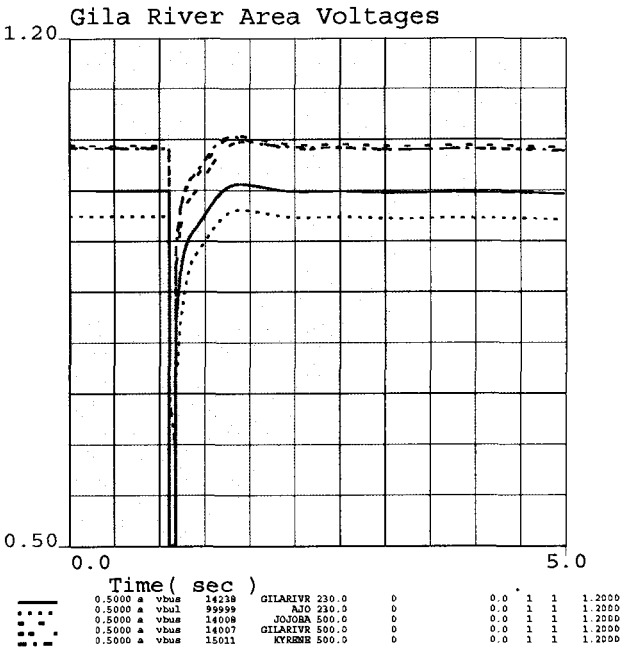

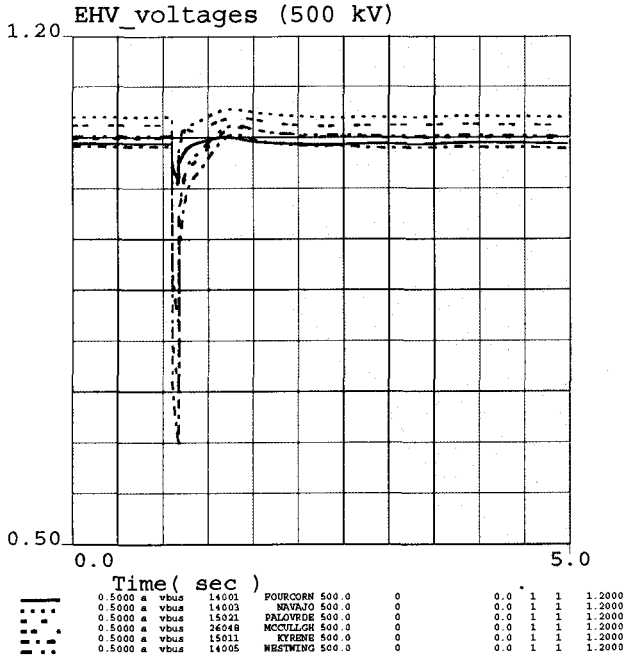

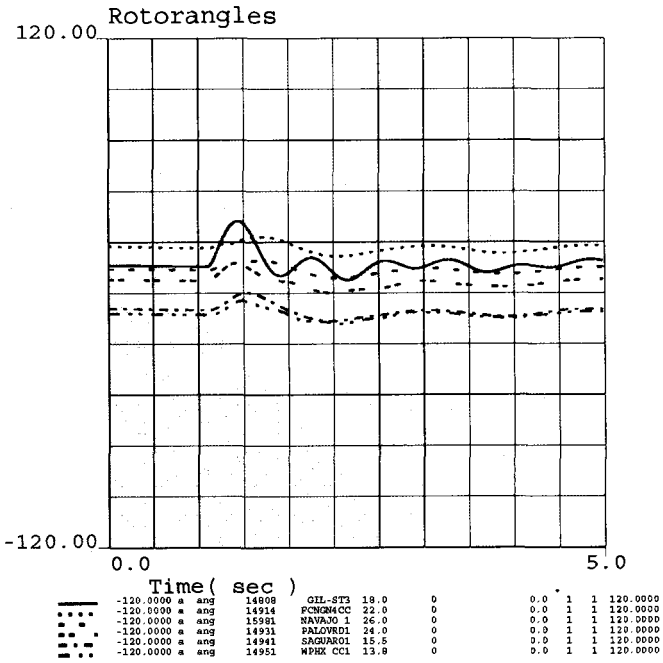

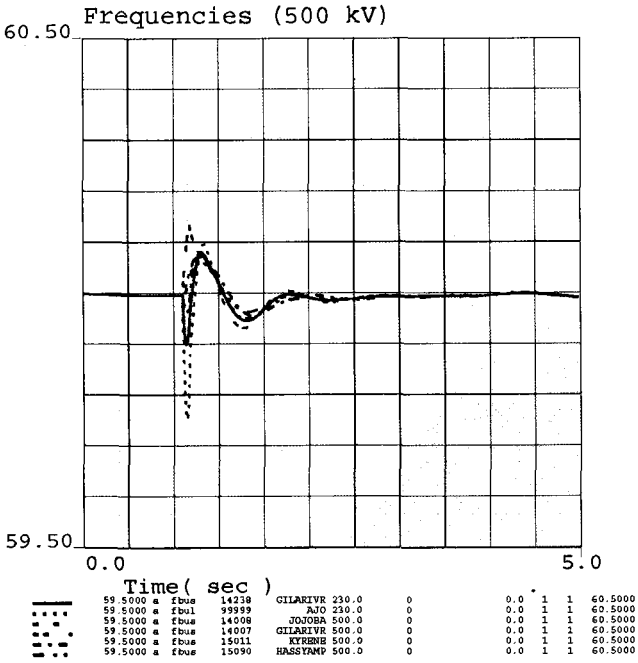

2013 Heavy Summer WestConnect Case
10/28/2008

a:stab_2013_ajo_gr_jj.chf

c:\chf

Thu Nov 20 13:00:41 2008

2009 APS Ten Year Plan
2013 Heavy Summer WECC/WestConnect Case/FMI AJO LOAD

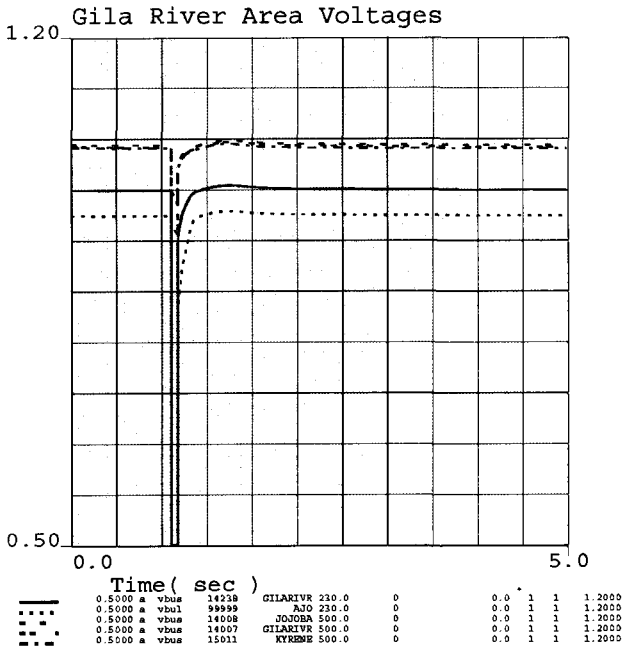

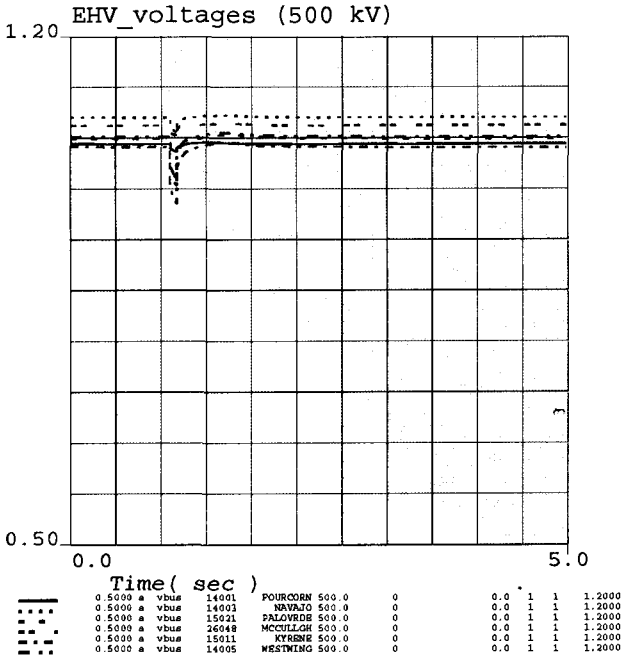

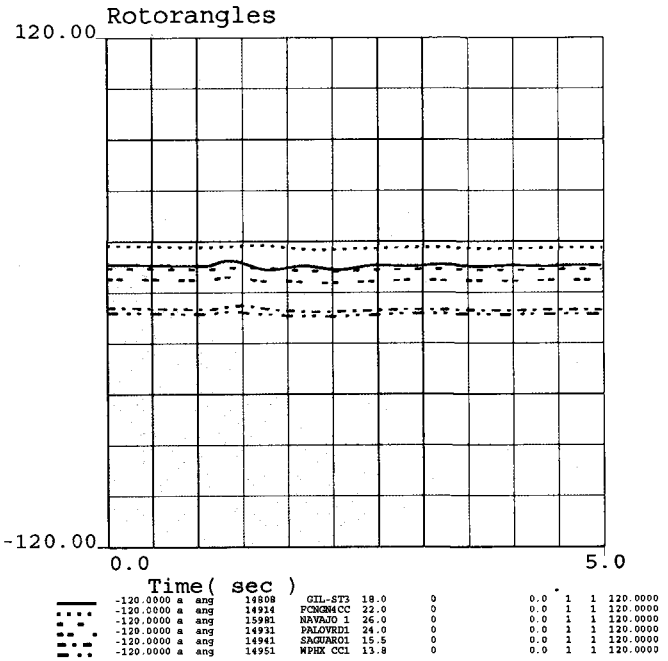

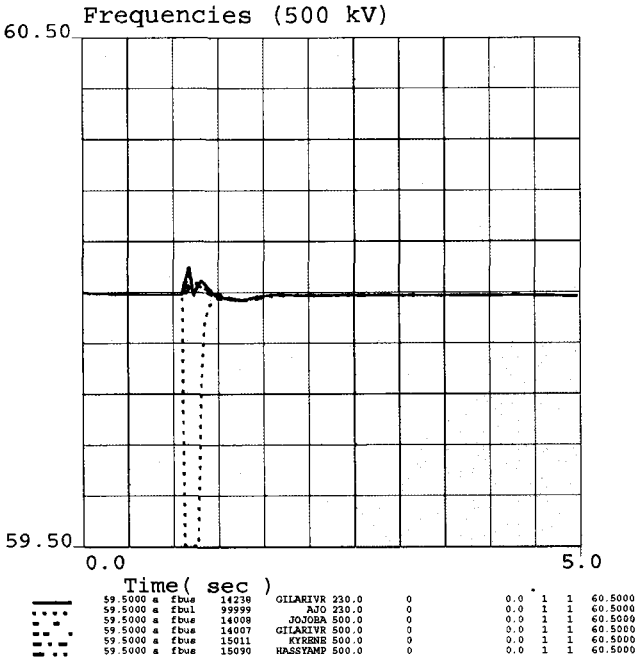

2013 Heavy Summer WestConnect Case
10/28/2008

a:stab_2013_ajo_gr_ts4.chf

c:\chf

Thu Nov 20 13:00:43 2008

2009 APS Ten Year Plan
2013 Heavy Summer WECC/WestConnect Case/FMI AJO LOAD

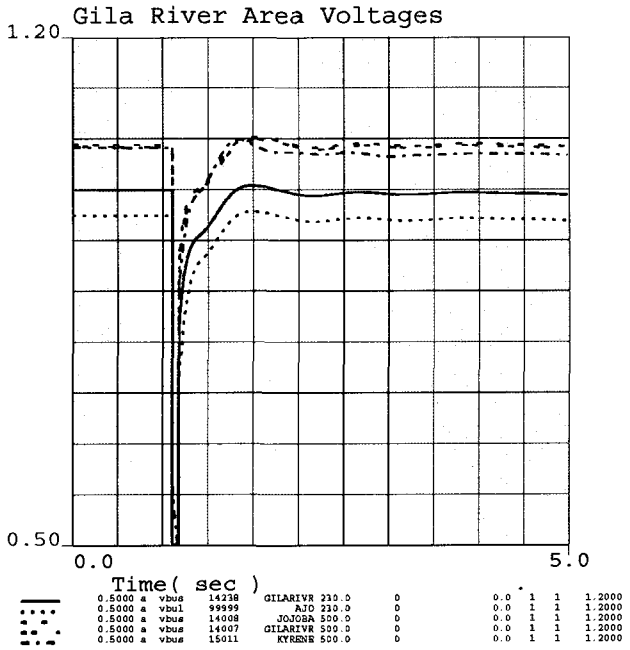

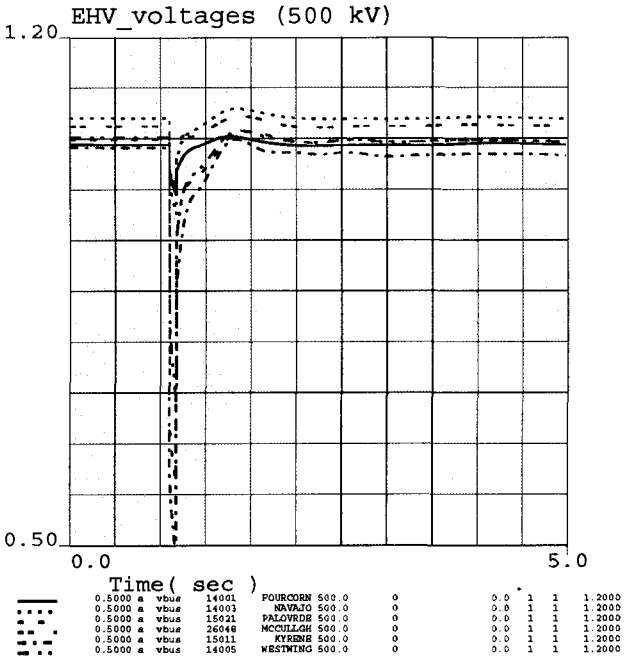

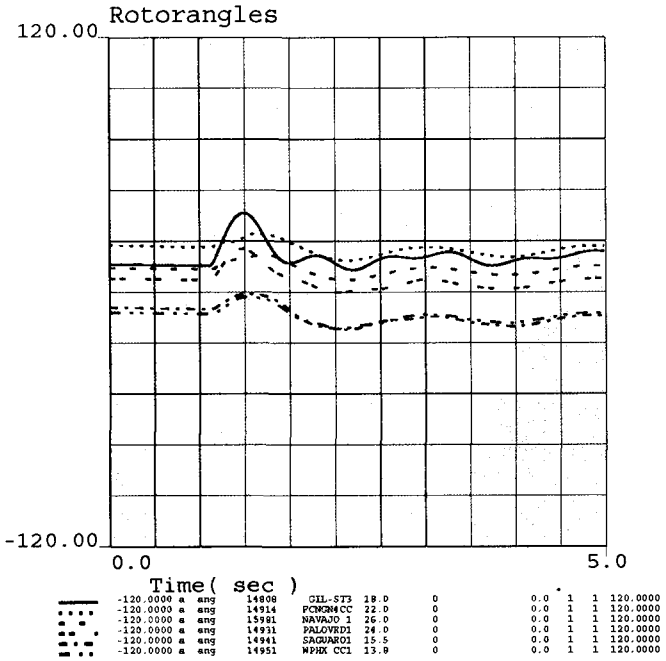

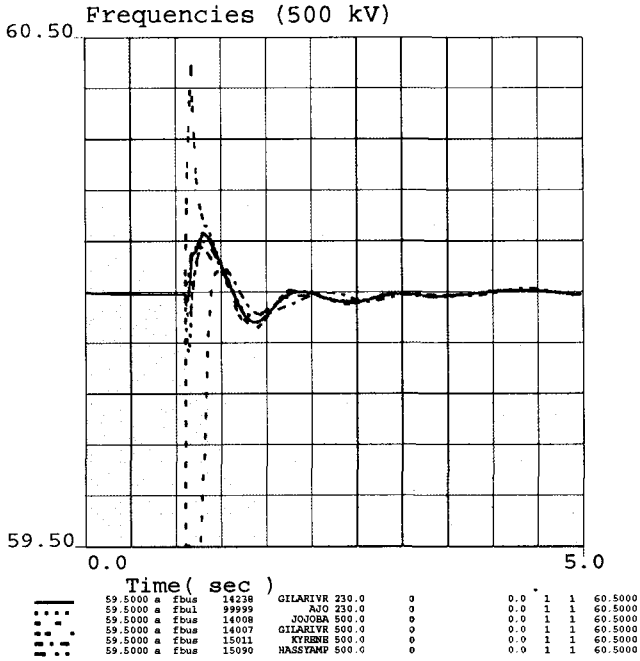

2013 Heavy Summer WestConnect Case
10/28/2008

a:stab_2013_ajo_jjx_kyx.chf

c:\chf

Thu Nov 20 13:00:50 2008

2009 APS Ten Year Plan
2013 Heavy Summer WECC/WestConnect Case/FMI AJO LOAD

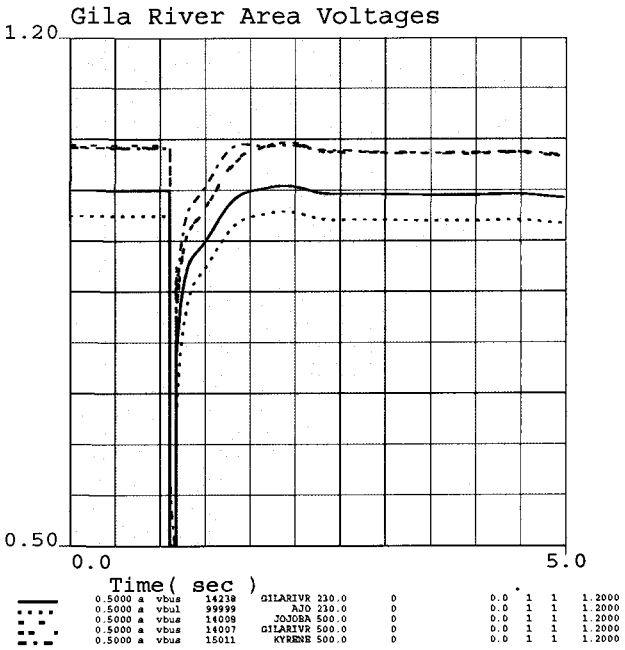

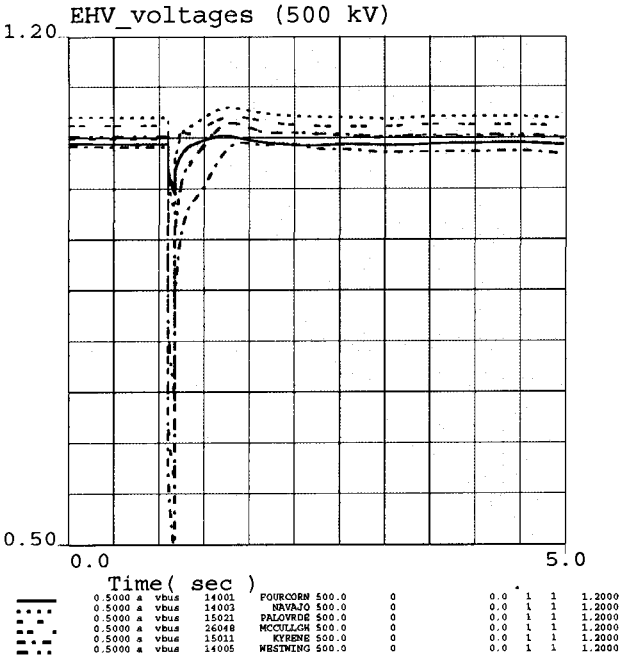

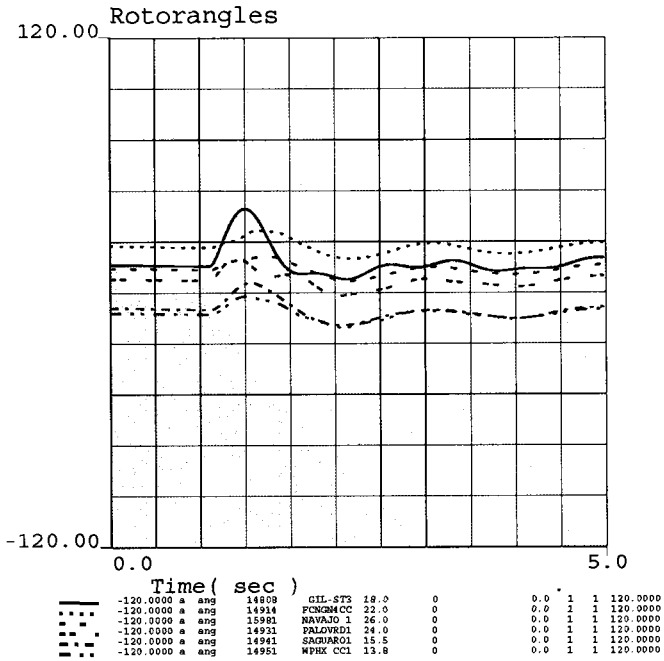

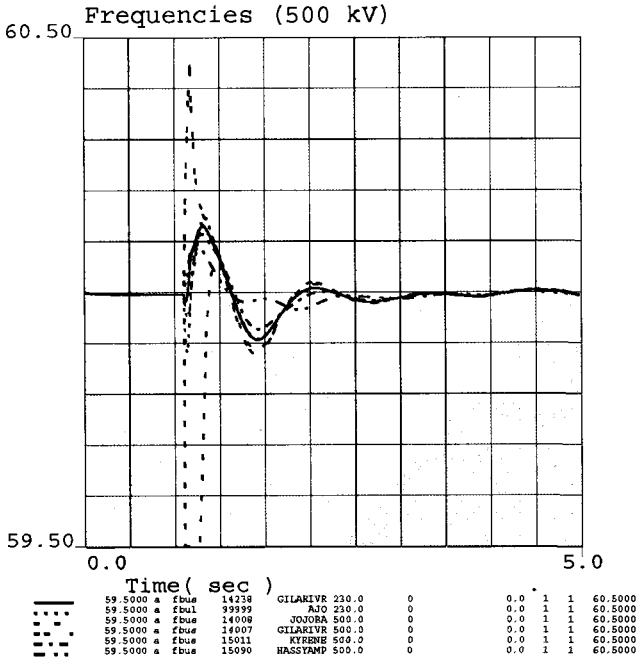

2013 Heavy Summer WestConnect Case
10/28/2008

a:stab_2013_ajo_jj_ha.chf

c:\chf

Thu Nov 20 13:00:48 2008

2009 APS Ten Year Plan
2013 Heavy Summer WECC/WestConnect Case/FMI AJO LOAD

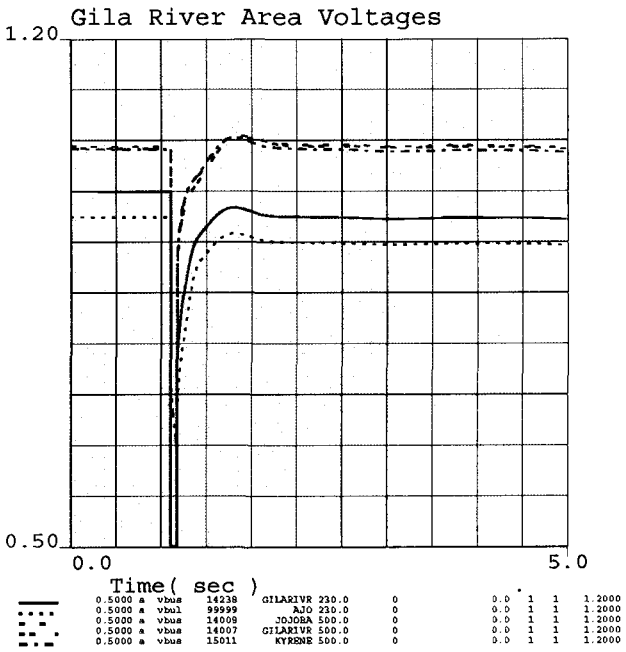

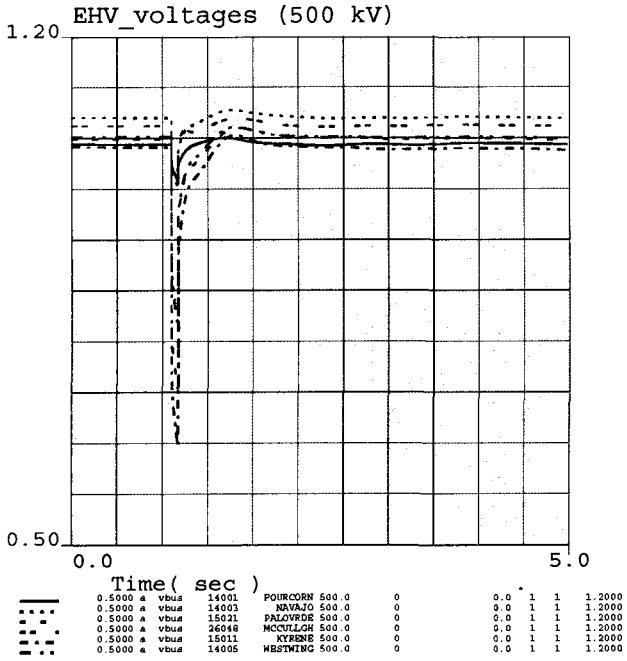

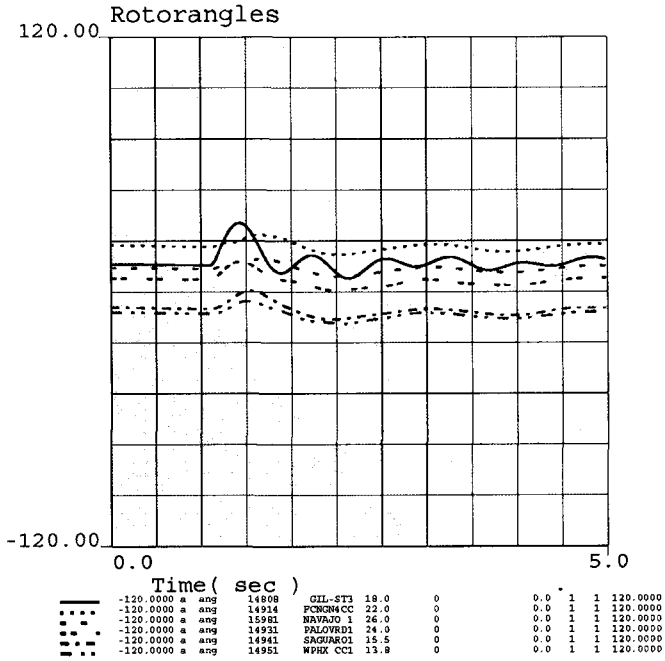

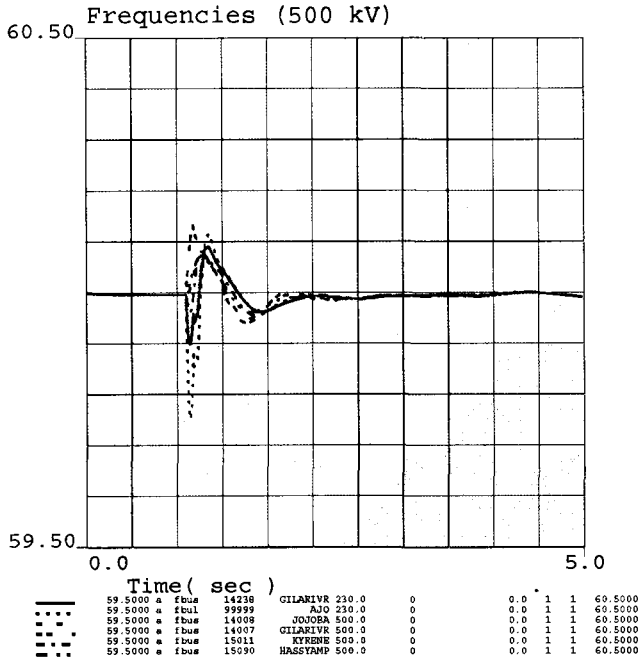

2013 Heavy Summer WestConnect Case
10/28/2008

a:stab_2013_ajo_gr_500_230.chf

c:\chf

Thu Nov 20 13:00:36 2008

2009 APS Ten Year Plan
2013 Heavy Summer WECC/WestConnect Case/FMI AJO LOAD

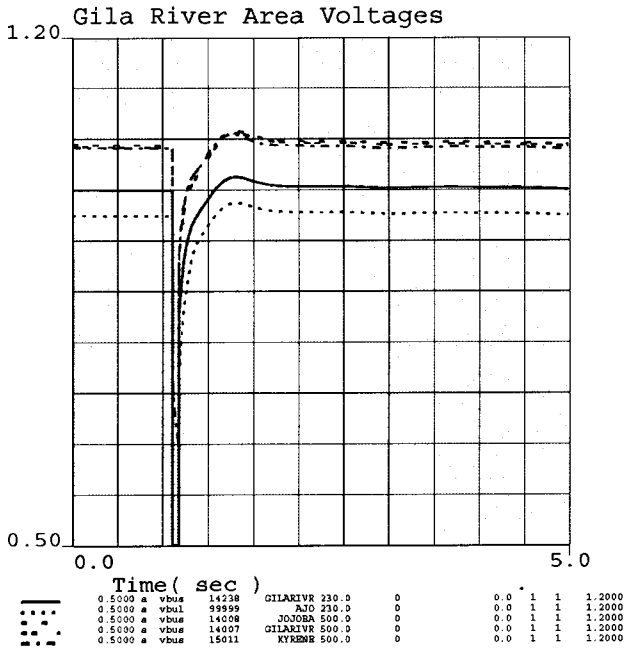

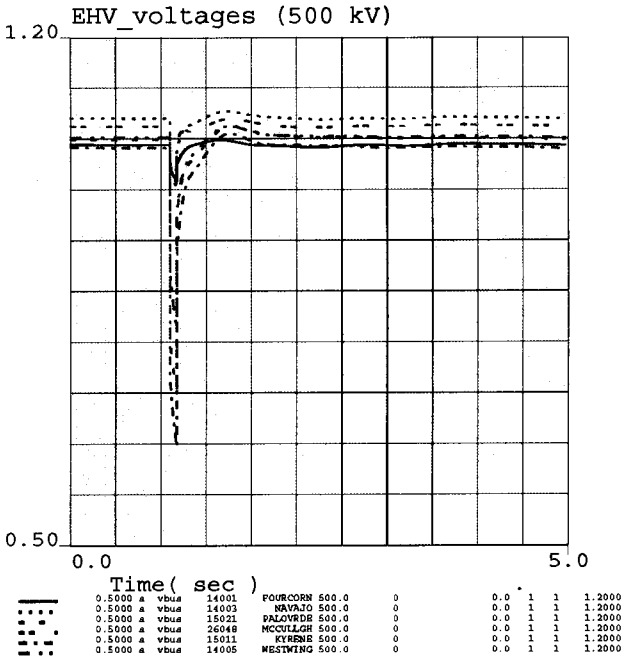

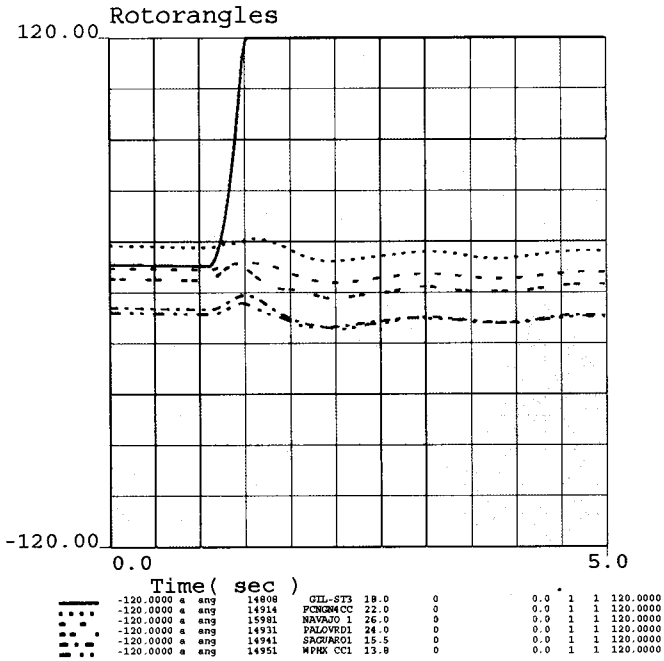

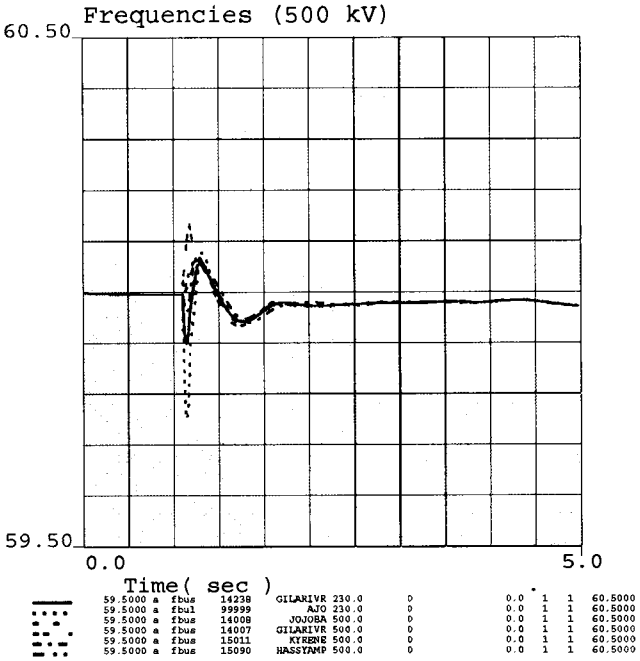

2013 Heavy Summer WestConnect Case
10/28/2008

a:stab_2013_ajo_gr_gener.chf

c:\chf

Thu Nov 20 13:00:38 2008

2009 APS Ten Year Plan
2013 Heavy Summer WECC/WestConnect Case/FMI AJO LOAD

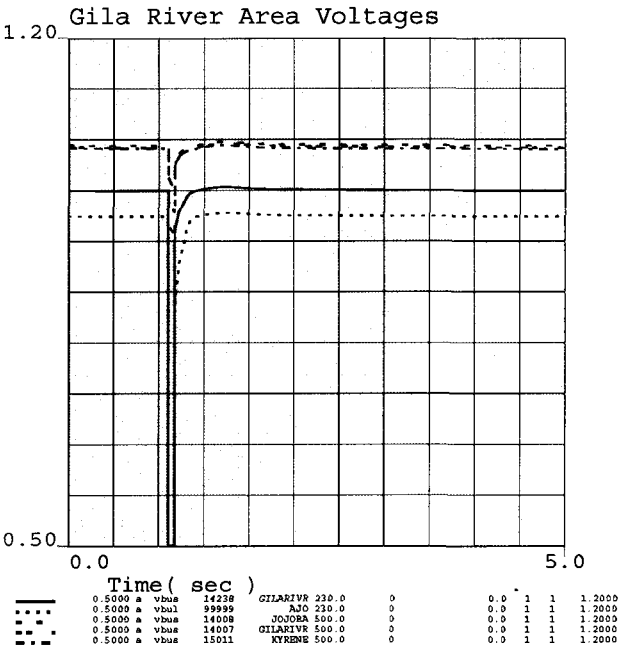

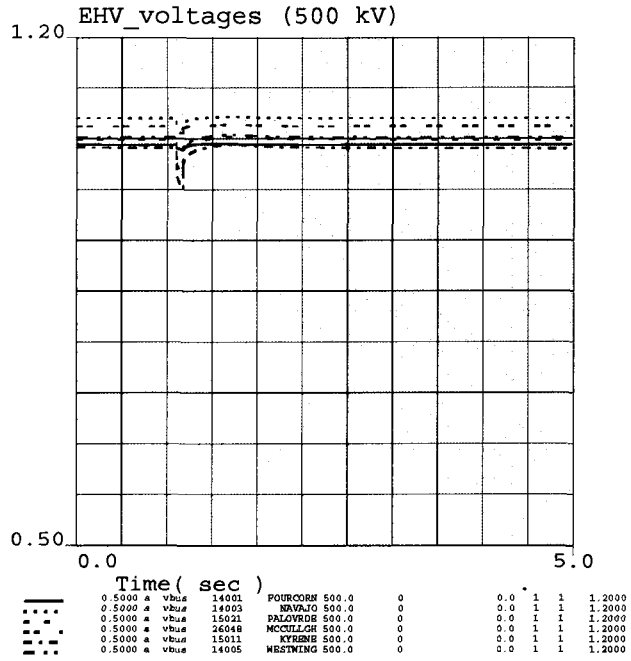

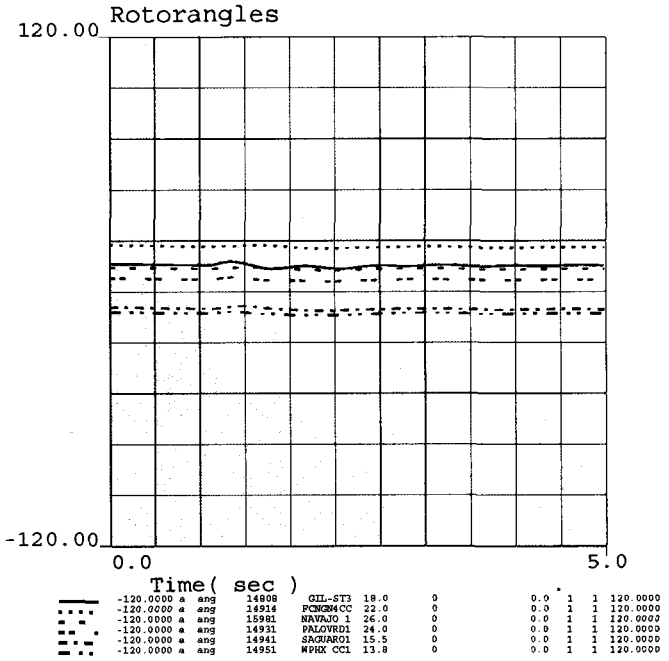

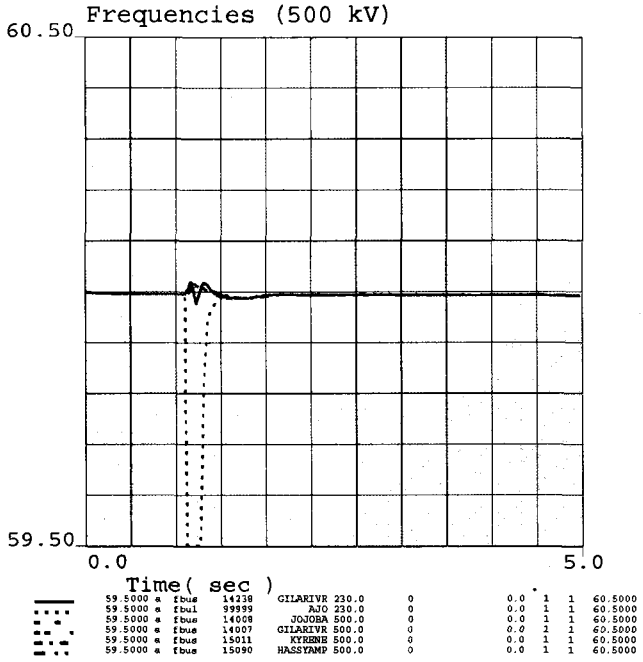

2013 Heavy Summer WestConnect Case
10/28/2008

a:stab_2013_ajo_fmi_load.chf

c:\chf

Thu Nov 20 13:00:34 2008

2009 APS Ten Year Plan
2013 Heavy Summer WECC/WestConnect Case/FMI AJO LOAD

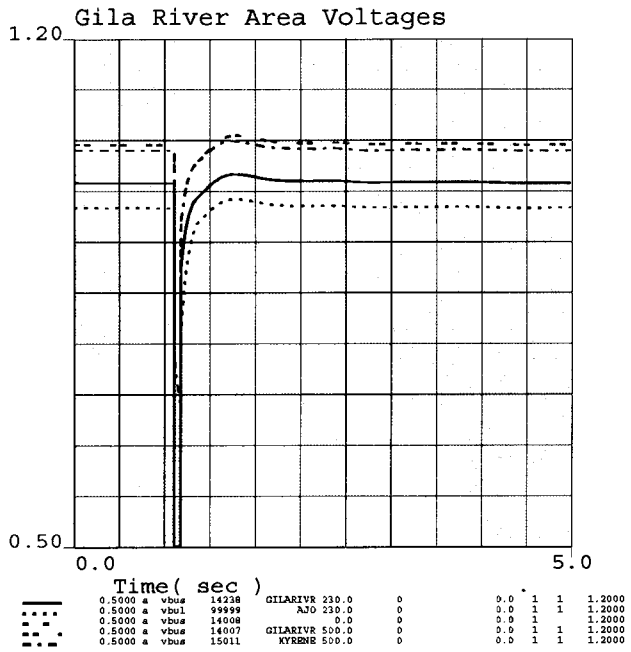

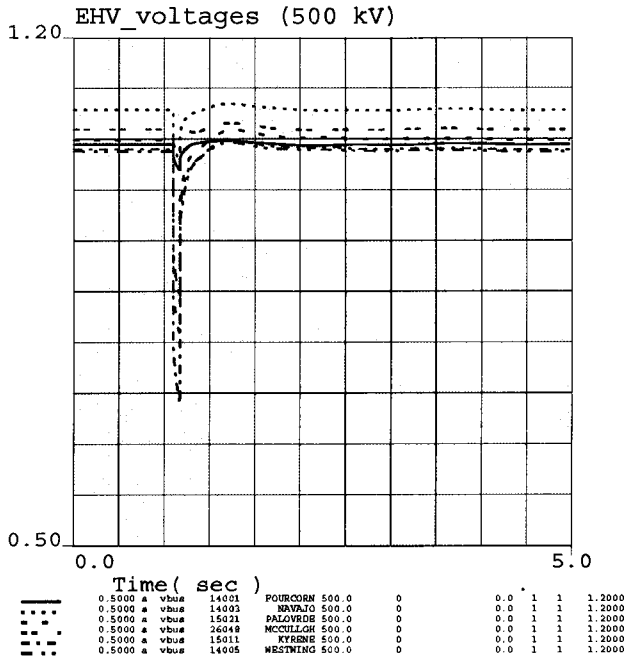

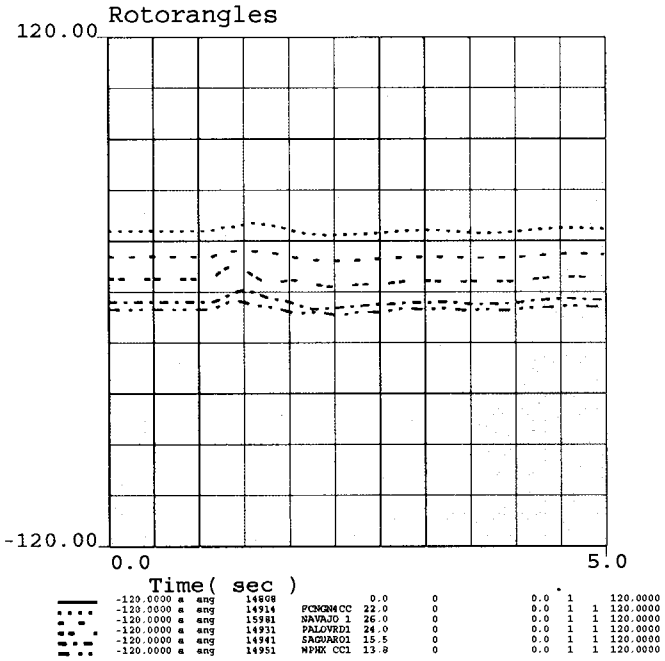

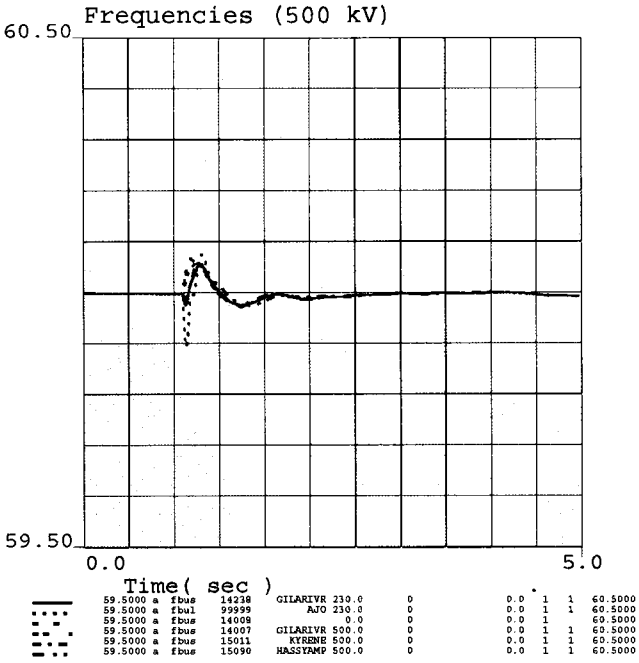

2013 Heavy Summer WestConnect Case
10/28/2008

a:stab_2013_ajo_n2_gr_jj.chf

c:\chf

Thu Nov 20 13:00:31 2008

2009 APS Ten Year Plan
2013 Heavy Summer WECC/WestConnect Case/FMI AJO LOAD

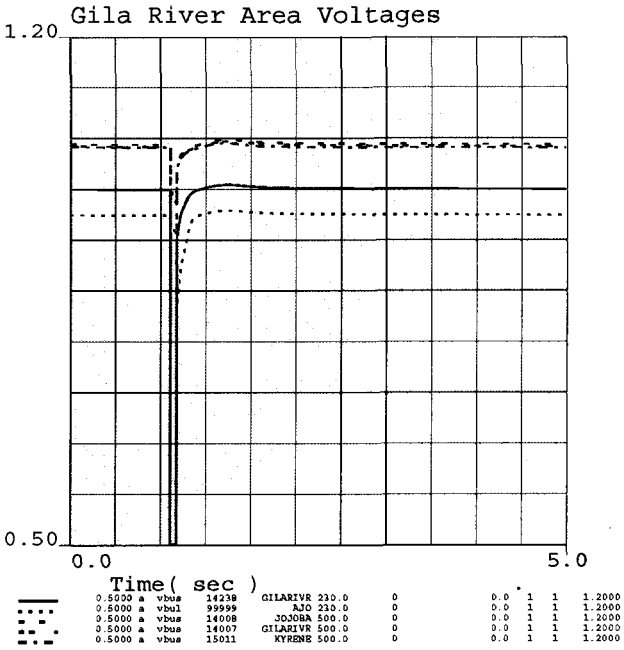

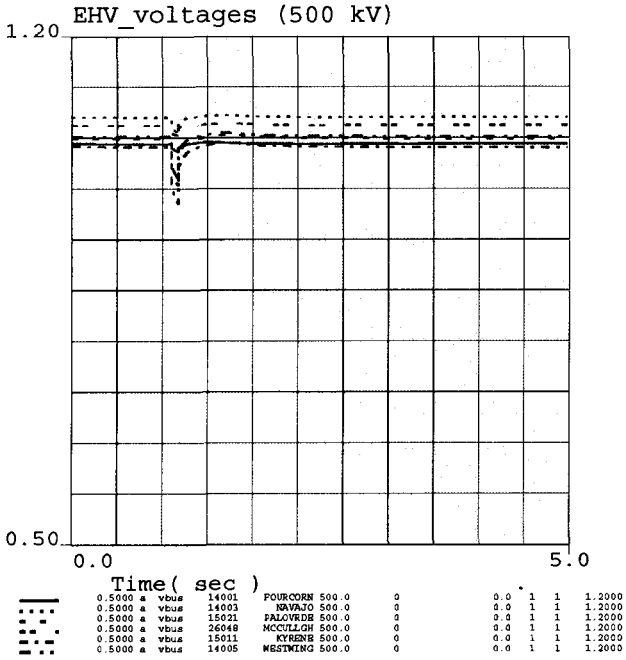

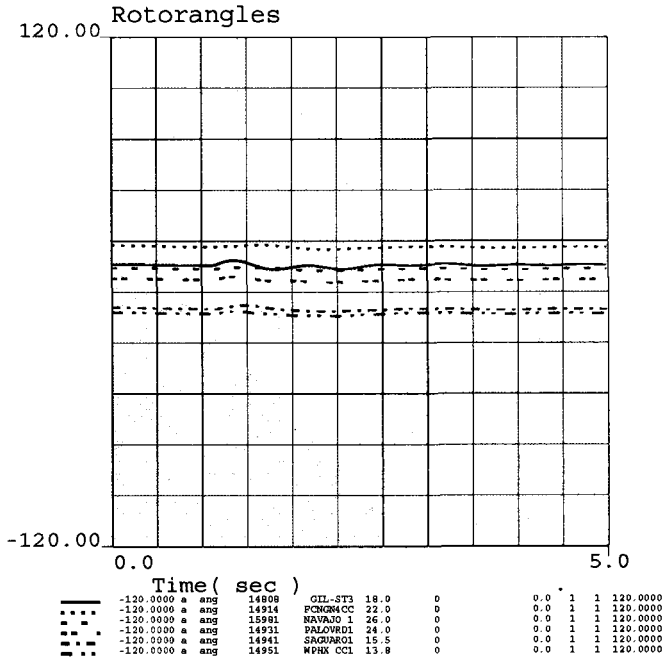

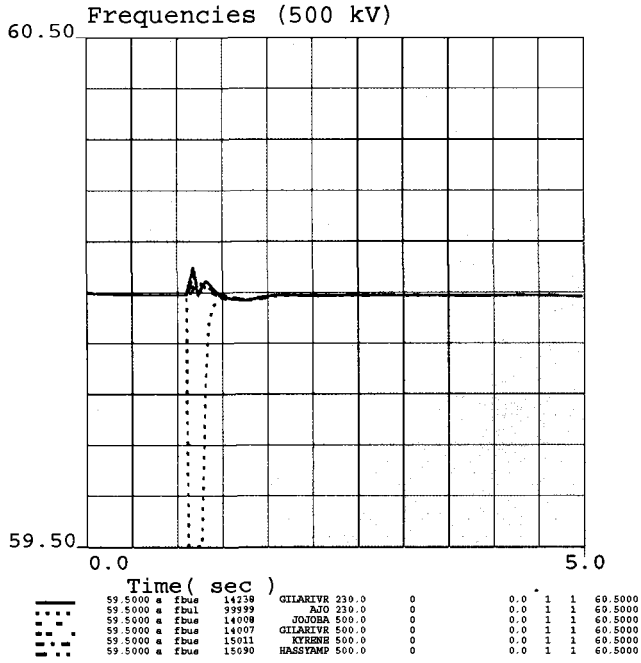

2013 Heavy Summer WestConnect Case
10/28/2008

a:stab_2013_ajo_gr_ts4_pv.chf

c:\chf

Thu Nov 20 13:00:45 2008