0000087153

ORIGINAL

BEFORE THE ARIZONA CORPORATION COMMISSION

RECEIVED

2008 JUL 31 P 3: 40

AZ CORP COMMISSION
DOCKET CONTROL

COMMISSIONERS
MIKE GLEASON, Chairman
WILLIAM A. MUNDELL
JEFF HATCH-MILLER
KRISTIN K. MAYES
GARY PIERCE

IN THE MATTER OF THE APPLICATION OF WATER UTILITY OF GREATER TONOPAH, INC., AN ARIZONA CORPORATION, FOR AN EXTENSION OF ITS EXISTING CERTIFICATE OF CONVENIENCE AND NECESSITY.	Docket No. W-02450A-06-0626
IN THE MATTER OF THE APPLICATION OF HASSAYAMPA UTILITY COMPANY, INC., AN ARIZONA CORPORATION, FOR AN EXTENSION OF ITS EXISTING CERTIFICATE OF CONVENIENCE AND NECESSITY.	Docket No. SW-20422A-06-0566 **Notice of Filing (Compliance) (ATC for Campus No. 1 WRF)**

Hassayampa Utility Company, Inc. ("HUC") respectfully files the Interim Approval To Construct ("ATC") for HUC's Campus No. 1 Water Reclamation Facility, as required under Decision No. 70357 (May 16, 2008).

I. Compliance Summary.

Decision No. 70357 granted HUC an extension to its Certificate of Convenience and Necessity ("CC&N") to provide wastewater service in western Maricopa County. HUC is a subsidiary of Global Water Resources, LLC. The water CC&N for the Hassayampa Ranch subdivision is held by Water Utility of Greater Tonopah, Inc. ("WUGT"), which is also a subsidiary of Global Water Resources, LLC. HUC and WUGT will together provide integrated water, wastewater and recycled water services to the Hassayampa Ranch subdivision.

...

...

...

....

Arizona Corporation Commission
DOCKETED
JUL 31 2008
DOCKETED BY MM

HUC has a number of compliance deadlines as established in Decision No. 70357:

Item	Due Date	Status
ATC for Campus No. 1 WRF	July 31, 2008	Interim ATC for treatment plant approved July 30, 2008
Arizona Pollution Discharge Elimination System ("AZPDES") permit	April 30, 2009	Approved AZPDES filed July 18, 2008
Aquifer Protection Permit	April 30, 2009	APP application pending; ADEQ found APP application administratively sufficient on June 4, 2008

HUC spent significant funds as part of its efforts to comply with Decision No. 70357:

Compliance Activity	Amount spent (as of July 2008)
Permitting • APP • AZPDES • Special Use Permit	$310,170
Campus No. 1 ATC • Plant Design • Respond to MCESD	$359,797
Section 208 approval	$325,086
Total	**$995,053**

HUC's investment in money and resources in this CC&N area demonstrates that HUC is committed to this service area, despite the current development slump. HUC has definitely not "sat on its hands" and done nothing. Instead, HUC has devoted substantial resources towards complying with Decision No. 70357.

...

...

...

ROSHKA DEWULF & PATTEN, PLC
ONE ARIZONA CENTER
400 EAST VAN BUREN STREET - SUITE 800
PHOENIX, ARIZONA 85004
TELEPHONE NO 602-256-6100
FACSIMILE 602-256-6800

ROSHKA DEWULF & PATTEN, PLC
ONE ARIZONA CENTER
400 EAST VAN BUREN STREET - SUITE 800
PHOENIX, ARIZONA 85004
TELEPHONE NO 602-256-6100
FACSIMILE 602-256-6800

II. Overview of ATC for the Phase I treatment plant ATC.

HUC has diligently pursued the ATC for its Campus No. 1 Water Recycling Facility ("WRF")(which is its Phase I facility),[1] as shown by the timeline below:

Action or Document	Date	Attached as Exhibit No.
ATC Application	June 2, 2008	1
Engineering Plans	Sealed, June 2, 2008	2
Design Report	June 2, 2008	3
MCESD Review Comments	June 30, 2008	4
Response to MCESD Comments	July 7, 2008	5
Revised Engineering Plans	July 7, 2008	6
Revised Design Report	July 7, 2008	7
MCESD Second Review Comments	July 17, 2008	8
Response to MCESD Second Review Comments	July 22, 2008	9
Minutes of meeting between MCESD and HUC	July 23, 2008	10
Second Revised Design Report	July 28, 2008	11
Interim ATC	July 30, 2008	12

HUC and its engineering consultants met with MCESD on July 23, 2008 to further discuss the ATC application. HUC intends to use a "design/build" process for this plant. The design/build process has over the past several years become widely accepted as an alternative delivery method. Under a design/build process, the same contractor completes the final portion of the design (possibly working with a sub-contractor) and builds the plant. A design/build process is typically more efficient, because the design is closely integrated with the building process. HUC's

[1] Decision No. 68922 (August 29, 2006) also requires HUC to obtain an ATC for Campus No. 1 by July 31, 2008. HUC is making a parallel filing in that docket, Docket No. SW-20422A-05-0659.

affiliate, Global Water – Palo Verde Utilities Company, used a design-build process for its Water Recycling Facility in Pinal County. Palo Verde was able to obtain an ATC from ADEQ for that facility by submitting plans similar to the plans submitted here.

However, in Maricopa County, for design/build projects MCESD issues an Interim ATC, as MCESD requires additional reviews throughout the design build process, each review receiving an Interim ATC. As shown on the attachments, the Interim ATC allows for construction to begin immediately. Interim ATC is simply an ATC subject to certain conditions that requires additional reviews by MCESD during the design build process, issued by MCESD under Chapters II and V of the Maricopa County Health Code (which governs ATCs), and therefore satisfies the ATC in Decision No. 70357.

RESPECTFULLY SUBMITTED this 31st day of July 2008.

ROSHKA DEWULF & PATTEN, PLC

By _____

Michael W. Patten
Timothy J. Sabo
One Arizona Center
400 East Van Buren Street, Suite 800
Phoenix, Arizona 85004

Original + 15 copies of the foregoing
Notice was filed this 31st day of July 2008, with:

Docket Control
Arizona Corporation Commission
1200 West Washington
Phoenix, Arizona 85007

ROSHKA DEWULF & PATTEN, PLC
ONE ARIZONA CENTER
400 EAST VAN BUREN STREET - SUITE 800
PHOENIX, ARIZONA 85004
TELEPHONE NO 602-256-6100
FACSIMILE 602-256-6800

Copies of the foregoing were hand-delivered/mailed this 31st day of July 2008, to:

Lyn A. Farmer, Esq.
Chief Administrative Law Judge
Hearing Division
Arizona Corporation Commission
1200 West Washington
Phoenix, Arizona 85007

Ernest Johnson, Esq.
Director, Utilities Division
Arizona Corporation Commission
1200 West Washington
Phoenix, Arizona 85007

Janice Alward Esq.
Chief Counsel, Legal Division
Arizona Corporation Commission
1200 West Washington
Phoenix, Arizona 85007

Mr. Brian Bozzo
Compliance Manager, Utilities Division
Arizona Corporation Commission
1200 West Washington
Phoenix, AZ 85007

Debbie Amaral

ROSHKA DEWULF & PATTEN, PLC
ONE ARIZONA CENTER
400 EAST VAN BUREN STREET - SUITE 800
PHOENIX, ARIZONA 85004
TELEPHONE NO 602-256-6100
FACSIMILE 602-256-6800

1

Environmental Services Department
1001 N. Central Avenue, Suite 150
Phoenix AZ 85004

Water and Waste Management Division
Water and Wastewater Treatment Program
(602) 506-6666
FAX (602) 506-6925

APPLICATION FOR APPROVAL TO CONSTRUCT WATER AND/OR WASTEWATER TREATMENT/REUSE FACILITIES

1. PROJECT INFORMATION:

☐ Standard review ☒ Expedited review ☐ Phased review ☐ Time extension (approval renewal)

Project Name: Hassayampa Ranch Water Recycling Factory (HR WRF)

Project Description: Construction of a new 0.5 MGD WRF that will be designed, constructed and operated so as to ensure the greatest degree of discharge reduction achievable. The facility will employ advanced wastewater treatment technology that includes nitrification and denitrification to produce Class A+ reclaimed water that can be directly reused, recharged or discharged. The treatment processes include screenings/grit removal, SBRs, sand filtration, UV disinfection, aerobic digestion, and biosolids dewatering.

Project Components: (check the applicable components)

☒ Treatment Facility/Plant	☐ PRV Station	☐ Recharge/Recovery Facility	☐ Point-of-Use System
☐ Well	☐ Pipeline	☐ Reuse Irrigation System	☐ Other:
☐ Storage Tank/Reservoir	☐ Disinfection System	☐ Reuse Impoundment/Lake	☐ Other:
☐ Pump Station	☐ Odor Control/Facility System	☐ Disposal System/Wetland	

Required Permits: (check each category where a new or modified permit is required)

☒ ADEQ AZPDES Permit	☒ ADWR U/G Storage Facility Permit	☐ POTW Pretreatment Permit
☒ ADEQ Aquifer Protection Permit	☒ ADWR Water Storage Permit	☒ Other: Special Use Permit
☒ ADEQ Reclaimed Water Permit	☒ ADWR Recovery Well Permit	☐ Other:

2. SYSTEM INFORMATION:

System Type: ☐ Water ☒ Wastewater ☐ Reclaimed Water

System Name: Hassayampa Ranch WRF (aka HUC Campus 1 WRF) (System Name (Type or Print)) **System ID Number:** ____ (ID (Type or Print))

Owner's Name: Hassayampa Utility Company, Inc. (Owner's Name (Type or Print)) **Contact Person:** Jason Bethke, P.E. (Contact Person (Type or Print))

3. SITE INFORMATION:

Location: Buckeye (Nearest City or Town (Type or Print)) **Township:** 2N **Range:** 5W **Section:** 22

Physical Address: East of the NEC of Indian School Road and 339th Avenue (Address, City, State, and ZIP Code (Type or Print))

4. DOCUMENTS SUBMITTED WITH THIS APPLICATION: (Check where applicable)

☒ Engineering Design Report	☐ Master Plan/Study/Report	☐ Copies of Permits/Certificates
☒ Design Drawings	☐ Pilot Testing Plan/Study/Report	☐ Recorded Legal Easements/Documents
☐ Technical Specifications	☐ Water Quality Analysis Report	☐ Signed Service or Extension Agreements
☐ Engineering Calculations	☐ Operational Log/Report	☐ Sewer Capacity Letter
☐ Manufacturer's Documentation	☐ MAG 208 Certification Report	☐ Other:

Environmental Services Department
1001 N. Central Avenue, Suite 150
Phoenix AZ 85004

Water and Waste Management Division
Water and Wastewater Treatment Program
(602) 506-6666
FAX (602) 506-6925

APPLICATION FOR APPROVAL TO CONSTRUCT WATER AND/OR WASTEWATER TREATMENT/REUSE FACILITIES

5. ENGINEER OF PROJECT:

Firm Name: McBride Engineering Solutions (Firm Name (Type or Print)) **Contact Person:** Brian McBride, P.E. (Contact Person (Type or Print))

Mailing Address: 6100 W. Gila Springs Blvd. Chandler, AZ 85226 (Address, City, State, and ZIP Code (Type or Print))

Telephone: 480-759-9608 (Telephone (Type or Print)) **Fax:** 480-706-1106 (Fax (Type or Print)) **E-Mail:** bmcbride@mcbrideengineering (E-mail (Type or Print))

6. OWNER OF PROJECT:

Owner's Name: Hassayampa Utility Company, Inc. (Owner's Name (Type or Print)) **Contact Person:** Jason Bethke, P.E. (Contact Person (Type or Print))

Mailing Address: 21410 N. 19th Ave., Suite 201, Phoenix, AZ 85027 (Address, City, State, and ZIP Code (Type or Print))

Telephone: 623-580-9600 (Telephone (Type or Print)) **Fax:** 623-580-9659 (Fax (Type or Print)) **E-Mail:** jason.bethke@gwresources.com (E-mail (Type or Print))

7. PERSON AUTHORIZING PROJECT:

Name: Jason Bethke, P.E. (Name (Type or Print)) **Job Title/Affiliation:** Director of Engineering (Job Title/Affiliation (Type or Print))

Signature: Jason Bethke (Signature) **Date:** 5/28/08 (Date (Type or Print))

8. CONSTRUCTION AGREEMENT:

The undersigned hereby agrees to construct the water, wastewater and/or reclaimed water facilities according to the approved plan documents.

Name: _____ (Name (Type or Print)) **Job Title/Affiliation:** _____ (Job Title/Affiliation (Type or Print))

Signature: _____ (Signature) **Date:** _____ (Date (Type or Print))

Est. Construction Start Date: _____ (Date (Type or Print)) **Est. Construction Completion Date:** _____ (Date (Type or Print))

For Internal Use:

Date Submitted: _____	Project No.: _____	Amount Paid: _____	Review Requested: ☐ Standard ☐ Phased ☐ Expedited ☐ Renewal
Site Location Code: _____	Reviewer: _____	Fee Codes: _____	

2

HASSAYAMPA UTILITY COMPANY

GLOBAL WATER
RELIABLE • RENEWABLE • REUSABLE
TM

HASSAYAMPA NORTHEAST CAMPUS 1
WATER RECLAMATION FACILITY

MAY 2008

Registered Professional Engineer (Civil)
CERTIFICATE NO.
33441
BRIAN P.
McBRIDE
Date Signed 6-2-08
ARIZONA U.S.A.
Expires 03/31/11

McBride Engineering Solutions, Inc.
6100 West Gila Springs Place, Suite 7
Chandler, AZ. 85226
Phone: (480) 759-9608

SHEET NUMBER		SHEET TITLE
GENERAL		
1	G1	COVER SHEET
2	G2	SHEET INDEX
3	G3	LEGEND, VICINITY MAP, ABBREVIATIONS, GENERAL NOTES
CIVIL		
4	C1	SITE PLAN, GRADING AND PAVING
5	C2	GRADING AND PAVING DETAILS
6	C3	YARD PIPING PLAN, AND DETAILS
7	C4	YARD PIPING DETAILS
STRUCTURAL		
8	S1	GENERAL NOTES
9	S2	FILTER PLAN, ROOF PLAN, HYDROPNUEMATIC TANK
10	S3	MAIN PROCESS STRUCTURE, SECTION PLAN
11	S4	MAIN PROCESS STRUCTURE SECTIONAL TOP PLAN
12	S5	MAIN PROCESS STRUCTURE SECTIONAL PLAN
13	S6	SOLIDS HANDLING/ ELEC. ROOM/ OPERATIONS BLDG/ HEADWORK
14	S7	SECTIONS
15	S8	SECTIONS
16	S9	ULTRAVIOLET DISINFECTION AND TERTIARY PUMP STATION PLANS AND DETAILS
17	S10	ULTRAVIOLET DISINFECTION AND TERTIARY PUMP STATION PLANS AND DETAILS
18	S11	MAINTENANCE BUILDING PLANS AND SECTIONS
MECHANICAL		
19	M1	MECHANICAL LEGEND
20	M2	MAIN PROCESS STRUCTURE SECTIONAL PLAN
21	M3	MAIN PROCESS STRUCTURE SECTIONAL PLAN
22	M4	MAIN PROCESS STRUCTURE SECTIONAL PLAN, SECTION AND DETAIL
23	M5	MAIN PROCESS STRUCTURE SECTIONAL PLAN
24	M6	MAIN PROCESS STRUCTURE SECTIONAL PLAN
25	M7	MAIN PROCESS STRUCTURE SECTIONAL PLAN
26	M8	MAIN PROCESS STRUCTURE SECTIONAL PLAN
27	M9	EQUIPMENT GALLERY SECTION
28	M10	EQUIPMENT GALLERY SECTION
29	M11	OPERATIONS AND HEADWORKS ROOF PLAN EQUIPMENT GALLERY SECTION
30	M12	DIGESTER SECTIONAL PLAN AND SECTIONS
31	M13	EQUALIZATION BASIN SECTIONAL PLAN AND SECTION
32	M14	SEQUENCING BATCH REACTORS SECTIONAL PLAN AND SECTIONS
33	M15	SEQUENCING BATCH REACTORS SECTIONAL PLAN AND SECTIONS
34	M16	CHEMICAL STORAGE AND ODOR CONTROL PLAN AND SECTION
35	M17	CHEMICAL STORAGE AND ODOR CONTROL PLAN AND SECTION
36	M18	MAIN PROCESS STRUCTURE SECTIONAL PLAN

SHEET NUMBER		SHEET TITLE
MECHANICAL (cont.)		
37	M19	EAST EQUIPMENT GALLERY PLAN, HEADWORKS PLAN, OPERATIONS BUILDING PLAN
38	M20	EAST EQUIPMENT GALLERY SECTIONS, HEADWORKS SECTIONS
39	M21	FILTER PLAN, SECTIONS AND DETAILS
40	M22	FILTER PLAN, SECTIONS AND DETAILS
41	M23	ULTRAVIOLET DISINFECTION AND TERTIARY PUMP STATION PLANS AND DETAILS
42	M24	ULTRAVIOLET DISINFECTION AND TERTIARY PUMP STATION PLANS AND DETAILS
43	M25	DETAILS
44	M26	DETAILS
45	M27	HYDRAULIC PROFILE MASS BALANCE DIAGRAM
INSTRUMENTATION		
46	N1	SYMBOLS, LEGEND, ABBREVIATIONS
47	N2	OFFSITE IPS, DRAIN MANHOLES P&ID
48	N3	HEADWORKS P&ID
49	N4	PUMP ROOM P&ID
50	N5	SBR, EQ BASIN DIGESTER P&ID
51	N6	FILTER P&ID
52	N7	UV DISINFECTION SYS P&ID
53	N8	TERTIARY PUMP STATION P&ID
54	N9	SOLIDS HANDLING P&ID
55	N10	ODOR CONTROL P&ID
56	N11	BACKUP POWER PLANT OPERATIONS P&ID
ELECTRICAL		
57	E1	NOTES, SYMBOLS, AND ABBREVIATIONS
58	E2	APPURTENANCE DETAILS
59	E3	SINGLE LINE DIAGRAM, AND LOAD PARAMETERS
60	E4	SINGLE LINE SCHEMATIC
61	E5	SINGLE LINE SCHEMATIC

Registered Professional Engineer (Civil)
CERTIFICATE NO. 33441
BRIAN P. McBRIDE
Date Signed 6-2-08
ARIZONA U.S.A.
Expires 03/31/11

NO.	DATE	BY	REVISION DESCRIPTION

GLOBAL WATER
RELIABLE • RENEWABLE • REUSABLE
21410 N. 19th Ave. • Ste. 201 • Phoenix, AZ 85027
Ph: 623.580.9600 • Fax: 623.580.9650
www.gwresources.com

HASSAYAMPA NORTHEAST CAMPUS 1 WATER RECLAMATION FACILITY

McBride Engineering Solutions, Inc.
6100 West Gila Springs Pl., Suite 7
Chandler, AZ. 85226
Phone: (480) 759-9608

SHEET INDEX

DESIGNED: MJA/DMK
DRAWN: MGK/PB | CHECKED: BPM
DATE: 05-30-08
DWG. NO. G2
SHEET 2 OF 61

U:\P-PROJECTS\0901-GWR-HASSAYAMPA WRF\B0 DWGS & SPECS\B1 DWGS\B.1.1 CAD DWGS\0801 WRF\0801-G2 SHEET INDEX.DWG 08/05/08 - 07:34am

SECTION - DETAIL IDENTIFICATION

SECTION CALL OUT	SECTION ID LETTER — SECTION X/XX — DRAWING NUMBER DETAIL IS LOCATED
DETAIL CALL OUT	DETAIL ID LETTER — DETAIL XX/XX — DRAWING NUMBER DETAIL IS LOCATED
SECTION CUT	PLAN ID LETTER — X/XX — X/XX — DRAWING NUMBER DETAIL IS LOCATED

DISCIPLINE DESIGNATIONS

G	- GENERAL	H	- HVAC
C	- CIVIL	P	- PLUMBING
S	- STRUCTURAL	N	- INSTRUMENTATION
M	- MECHANICAL	E	- ELECTRICAL

ABBEVIATIONS

AB	ANCHOR BOLT
ABS	ACRYLONITRILE BUTADIENE STYRENE
ALUM	ALUMINUM
AVG	AVERAGE
AVR	AUTO AIR AND VACUUM RELEASE
BLDG	BUILDING
BM	BENCH MARK
BOT	BOTTOM
CJ	CONSTRUCTION JOINT
CL	CENTER LINE
CMP	CORRUGATED METAL PIPE
CONC	CONCRETE
CONN	CONNECTION
CONT	CONTINUOUS
CPVC	POST-CHLORINATED POLYVINYL CHLORIDE
CSTG	CASTING
CU	CUBIC COPPER
DB	DUCT BANK
DET	DETAIL
DI	DUCTILE IRON
DIA	DIAMETER
DN	DOWN
DO	DISSOLVED OXYGEN
DP	DISTRIBUTION PANELBOARD
DS	DISSOLVED SOLIDS
DTC	DATA TERMINAL CABINET
DWG	DRAWING
EL	ELEVATION
EQ	EQUAL, EQUALIZATION
EQPT	EQUIPMENT
EXP JT	EXPANSION JOINT
F	FLANGE
FL	FLOOR
FLG	FLANGE
FRP	FIBERGLASS REINFORCED PLASTIC
FT	FOOT (FEET)
GA	GAUGE
GPM	GALLONS PER MINUTE
HGT	HEIGHT
HM	HOLLOW METAL
HORIZ	HORIZONTAL
HP	HIGH POINT
ID	INSIDE DIAMETER
IN	INCH (ES)
INV	INVERT
LAV	LAVATORY
LCP	LIGHTING CONTROL PANEL
LP	LIGHTING PANELBOARD, LOW POINT
LR	LONG RADIUS

ABBEVIATIONS (cont)

MG	MILLION GALLONS
MGD	MILLION GALLONS PER DAY
MH	MANHOLE
MIN	MINIMUM
MJ	MECHANICAL JOINT
MLSS	MIXED LIQUOR SUSPENDED SOLIDS
NO.	NUMBER
NPSH	NET POSITIVE SUCTION HEAD
NTS	NOT TO SCALE
OA	OUTSIDE AIR
OC	ON CENTER
OD	OUTSIDE DIAMETER
OVHD	OVERHEAD
PC	POINT OF CURVATURE
pH	HYDROGEN ION CONCENTRATION
PI	POINT OF INTERSECTION
PL	PLATE
PT	POINT, POINT OF TANGENCY
PVC	POLYVINYL CHLORIDE
LB	LB
PE	PLAIN END
PL	PROPERTY LINE
PSF	POUNDS PER SQUARE FOOT
RCP	REINFORCED CONCRETE PIPE
RED	REDUCING
REQD	REQUIRED
OM	ROOM
ROW	RIGHT OF WAY
RTU	REMOTE TERMINAL UNIT
SBR	SEQUENCING BATCH RACTOR
SQ	SQUARE
SST	STAINLESS STEEL
STD	STANDARD
SS	SUSPENDED SOLIDS
STL	STEEL
TCP	TEMPERATURE CONTROL PANEL
TDS	TOTAL DISSOLVED SOLIDS
TEMP	TEMPERATURE
THK	THICK
TOC	TOP OF CONCRETE
TSS	TOTAL SUSPENDED SOLIDS
TYP	TYPICAL
VERT	VERTICAL
VOC	VOLATILE ORGANIC COMPOUND
VS	VOLATILE SOLIDS
VSS	VOLATILE SUSPENDED SOLIDS
W/	WITH
WS	WATER STOP

GENERAL NOTES FOR CONSTRUCTION

1. PROTECT ALL EXISTING SURFACE IMPROVEMENTS AND BURIED UTILITIES WHICH ARE TO REMAIN IN PLACE. REPAIR OR REPLACE ANY SUCH UTILITIES/IMPROVEMENTS DAMAGED IN THE COURSE OF THE WORK TO THE SATISFACTION OF THE OWNER/UTILITY.

2. HORIZONTAL COORDINATE LOCATIONS CITED ON THESE PLANS REFER TO THE TABLE MOUNTAIN WWTP COORDINATE SYSTEM. ON-SITE BENCHMARKS AND THEIR COORDINATE LOCATIONS ARE SHOWN ON DRAWING G2.

3. ACTUAL ELEVATION OF EXISTING TOPOGRAPHY AERIALLY MAPPED FOR THIS PROJECT MAY VARY FROM THAT SHOWN. GRADE TOLERANCE IS ± 2 FEET.

4. EXISTING SITE UTILITIES AND SURFACE FEATURES SHOWN ON THE DRAWINGS ARE ONLY FOR THE CONTRACTOR'S CONVENIENCE. THEY ARE BASED ON BEST AVAILABLE INFORMATION BUT ARE NOT WARRANTED BY THE ENGINEER NOR BY THE OWNER. BEFORE TRENCHING, FIELD VERIFY LOCATIONS AND ELEVATIONS OF ALL CRITICAL FEATURES WHICH MAY AFFECT THE WORK. IMMEDIATELY INFORM THE ENGINEER OF ANY SIGNIFICANT DISCREPANCIES.

5. SUBSURFACE EXPLORATION WAS PERFORMED BY TECHNICON ENGINEERING SERVICES, INC. SEE GEOTECHNICAL ENGINEERING REPORTS FOR BORING LOCATION AND SUBSURFACE INFORMATION.

6. SECURE ALL PERMITS REQUIRED FOR THE CONSTRUCTION OF THIS PROJECT.

7. CONFINE ON-SITE CONSTRUCTION ACTIVITIES WITHIN LIMITS OF CONSTRUCTION AS SHOWN ON DWG G2 UNLESS NOTED OTHERWISE.

8. UNLESS DETAILED, SPECIFIED OR INDICATED OTHERWISE, CONSTRUCT THE WORK IN ACCORDANCE WITH THE APPLICABLE DETAILS OF THE COUNTY OF MARICOPA IMPROVEMENTS AND AMENDMENTS AND IN COMPLIANCE WITH THE ORDINANCES AND SPECIFICATIONS OF THE COUNTY OF MARICOPA.

9. TYPICAL DETAILS APPLY EVEN THOUGH NOT REFERENCED AT SPECIFIC LOCATIONS OR IN SPECIFIC DRAWINGS.

10. (*) INDICATES DIMENSION TO BE DETERMINED BY THE CONTRACTOR BASED UPON EQUIPMENT MANUFACTURER SELECTED.

11. (**) INDICATES DIMENSION TO BE FIELD VERIFIED BY THE CONTRACTOR.

12. CONFINE CONSTRUCTION TRAILERS, MATERIAL AND EQUIPMENT STORAGE TO THE CONTRACTOR'S STAGING AREAS INDICATED ON THE OVERALL SITE PLAN, DWG G1. ANY ADDITIONAL STAGING AREA REQUIRED BY THE CONTRACTOR MUST BE APPROVED BY THE OWNER. RESTORE ALL STAGING AREAS NOT MODIFIED BY THE DESIGN TO PRECONSTRUCTION CONDITION PRIOR TO THE COMPLETION OF THE PROJECT.

13. PROVIDE MEASURES FOR TEMPORARY EROSION AND SEDIMENT CONTROL.

14. WHERE NOT OTHERWISE SHOWN OR SPECIFIED PROVIDE ALL PIPING AND UTILITIES INSTALLED BELOW GRADE WITH A MINIMUM 4'-0" COVER.

15. FIELD VERIFY PROPOSED ALIGNMENT OF NEW PIPING TO AVOID CONFLICTS WITH EXISTING UTILITIES.

16. NOTIFY UTILITIES AT LEAST 48 HOURS IN ADVANCE OF ANY EXCAVATION, DISCONNECTION, CONNECTION, OR REMOVAL OF ANY PIPE OR CONDUIT UNDER THEIR AUTHORITY. VERIFY LOCATIONS OF ALL UTILITIES AND AVOID DAMAGE TO SAME.

17. COORDINATE AND SCHEDULE ANY WORK THAT MAY IMPAIR, INTERRUPT OR OTHERWISE AFFECT ON-GOING TREATMENT PLANT PROCESSES AND OPERATIONS WITH THE OWNER A MINIMUM OF SEVEN DAYS IN ADVANCE OF WORK.

18. ALL ELEVATIONS SHOWN REFER TO NGVD (NATIONAL GEODETIC VERICAL DATUM) 1988 ELEVATIONS INDICATED ON THESE PLANS AS <10000 ARE BASD ON NGVD MINUS 800'. THUS AN ELEVATION CITED AS 78.26 SHOULD BE INTERPTED AS 878.26 NGVD.

19. CONTRACTOR IS ADVISED THAT SOME WORK SPECIFIED MAY REQUIRE WORKING IN CONFINED SPACES. COMPLY WITH "CONFINED SPACES" REQUIREMENTS AND PROVIDE SAFETY APPARATUS FOR ALL PERSONS ENTERING THE SPACE.

20. PORTIONS OF THE WORK ARE PERFORMED WITHIN OR IN PROXIMTY TO WASTEWATER PROCESSES. THE CONTRACTOR SHALL TAKE ALL PRECAUTIONS TO PROTECT EXISTING PROCESSES AND EQUIPMENT, AND PREVENT INTERRUPTION OR UPSET TO TREATMENT AS A RESULT OF HIS ACTIONS. CONTRACTOR MAY BE HELD RESPONSIBLE FOR DAMAGES RESULTING FROM INTERRUPTION OF, OR DISRUPTION TO TREATMENT PROCESSES CAUSED BY ACTION OR INACTION ON THE CONTRACTOR'S PART.

21. CONTRACTOR IS RESPONSIBLE FOR COMPLIANCE WITH APPLICABLE HEALTH AND SAFETY REGULATIONS FOR HAZARD COMMUNICATION, AND TRAINING OF PERSONNEL FOR WORK IN PROXIMITY TO WASTEWATER.

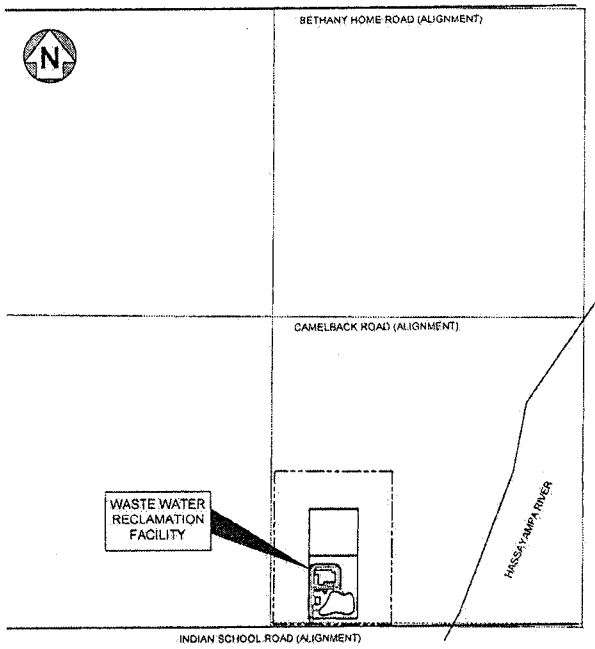

LOCATION MAP
1" = 1000'

Registered Professional Engineer (Civil)
CERTIFICATE NO. 33441
BRIAN P. McBRIDE
Date Signed 6-2-08
ARIZONA U.S.A.
Expires 03/31/11

NO.	DATE	BY	REVISION DESCRIPTION

GLOBAL WATER
RELIABLE • RENEWABLE • REUSABLE
21410 N. 19th Ave. • Ste. 201 • Phoenix, AZ 85027
Ph: 623.580.9000 • Fx: 623.580.9669
www.gwresources.com

HASSAYAMPA NORTHEAST CAMPUS 1 WATER RECLAMATION FACILITY

McBride Engineering Solutions, Inc.
6100 West Gila Springs Pl., Suite 7
Chandler, AZ. 85226
Phone: (480) 759-9608

LEGEND, VICINITY MAP, ABBREVIATIONS, GENERAL NOTES

DESIGNED: MJA/DMK
DRAWN: MG/KPB CHECKED: BPM
DATE: 05-30-08
DWG. NO. G3
SHEET 3 OF 81

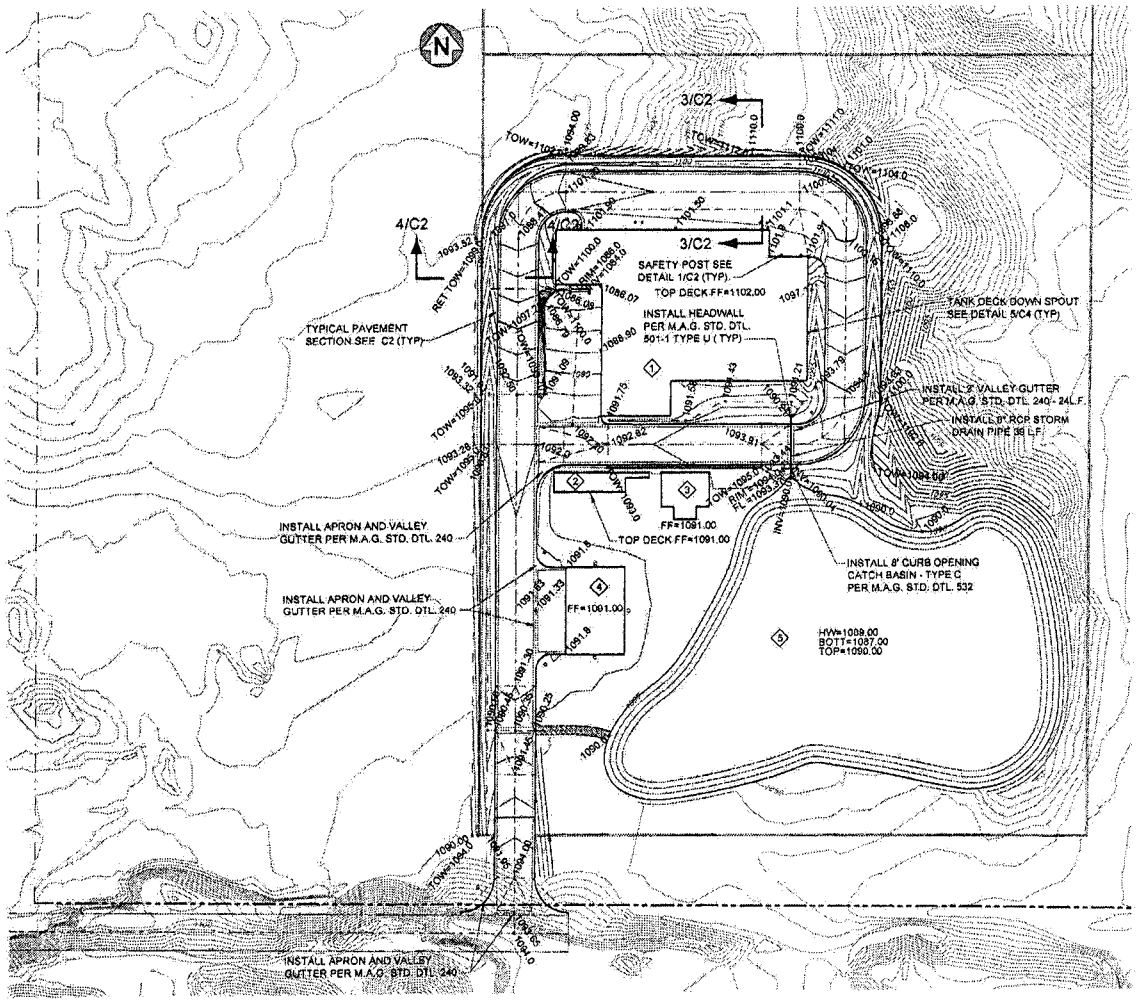

PAVING AND GRADING PLAN

SCALE: 1" = 80'-0"

PAVING AND GRADING NOTES

1. PROVIDE AND INSTALL AC PAVEMENT, AC CURB AND CONCRETE SIDEWALK IN ACCORDANCE WITH TYPICAL DETAILS THIS SHEET.
2. PROVIDE AND INSTALL AC PAVEMENT, AC CURB AND CONCRETE SIDEWALK IN ACCORDANCE WITH TYPICAL DETAILS, DWG G3.
3. MATCH NEW PAVEMENT, CURB, GUTTER AND SIDEWALK TO EXISTING FLUSH.
4. ROADWAY/PAVEMENT WIDTHS AND RADII CITED ARE TO BACK OF CURB, FACE OF STRUCTURE OR ROADWAY CENTERLINE UNLESS NOTED OTHERWISE.
5. ADJUST ELEVATION OF MANHOLE RIMS, CATCH BASIN GRATES AND VALVE BOX COVERS TO MATCH SURROUNDING PAVEMENT FLUSH.
6. FOR STORM DRAIN PIPING, SEE SITE YARD PIPING PLAN, DWG C3.
7. FOR VALVE BOX LOCATIONS, SEE SITE YARD PIPING PLAN, DWG C3.
8. ADJUST ALL EXISTING AND NEW MANHOLES, VALVE BOXES, CLEANOUTS AND FIRE HYDRANTS WITHIN WORK LIMITS TO FINAL GRADE.
9. DRAIN HEADBOX AND RECTANGULAR DOWNSPOUT TO SPLASH BLOCK AT GRADE SEE SITE YARD PIPING DETAILS, DWG C4.
10. RIP-RAP LINED SWALE TO STORM DRAIN INLET GRATE.
11. RIP-RAP FROM 8" STORM DRAIN OUTFALL TO BACK OF CURB SEE SITE YARD PIPING DETAILS , DWG C4.

ROADS, WALKS AND GRADING NOTES

1. ON-SITE VERTICAL AND HORIZONTAL CONTROL POINTS SHALL BE ESTABLISHED BY THE SURVEYOR. PROTECT ON-SITE CONTROL POINTS FROM DAMAGE. COST OF RE-ESTABLISHING CONTROL POINTS LOST OR DISTURBED DURING CONSTRUCTION SHALL BE BORNE BY THE CONTRACTOR RESPONSIBLE FOR THE DAMAGE.
2. COORDINATE ELEVATIONS OF FINISH PAVEMENT (DWGS G3 AND G4) AND RIMS OF MANHOLE, VALVE BOX, CLEANOUT AND FLUSHING CONNECTION COVERS (DWGS G7 AND G8) TO MEET FLUSH.
3. WHERE NEW PAVEMENT MEETS EXISTING, SAWCUT EXISTING PAVEMENT TO NEAT EDGE. MATCH NEW PAVEMENT CONTOUR AND ELEVATION TO EXISTING PAVEMENT.
4. AT RE-GRADED AREAS, DO NOT EXCEED 3:1 SLOPE.

KEYNOTES LEGEND

1. MAIN PROCESS STRUCTURE
   - SOLIDS HANDLING
   - EQUIPMENT GALLERY
   - DIGESTER
   - WEST SBR
   - EAST SBR
   - EQUALIZATION BASIN
   - ODOR CONTROL
   - ELECTRICAL ROOM
   - OPERATIONS BLDG
   - HEADWORKS
2. ULTRAVIOLET DISINFECTION
3. TERTIARY FILTERS
4. MAINTENANCE BUILDING
5. RETENTION BASIN

ROADS, WALKS AND GRADING LEGEND

EXISTING SURFACE FEATURES

- 1' INTERVAL CONTOUR
- 5' INDEX CONTOUR

NEW SURFACE FEATURES

- 1' INTERVAL CONTOUR
- 1000 — 5' INDEX CONTOUR
- × 1000 — SPOT ELEVATION
- RIP RAP
- RETAINING WALL
- SITE WALL
- STORM DRAIN PIPE
- CURB AND GUTTER
- SITE WALL
- NEW RIGHT-OF-WAY
- PROPERTY LINE
- ROAD CENTERLINE

Registered Professional Engineer (Civil)
CERTIFICATE NO. 33441
BRIAN P. McBRIDE
Date Signed 6-2-08
ARIZONA, U.S.A.
Expires 03/31/11

NO.	DATE	BY	REVISION DESCRIPTION

GLOBAL WATER
RELIABLE • RENEWABLE • REUSABLE
21410 N. 19th Ave. - Ste. 201 - Phoenix, AZ 85027
Ph: 623.580.9600 - Fx: 623.580.9656
www.gwresources.com

HASSAYAMPA NORTHEAST CAMPUS 1 WATER RECLAMATION FACILITY

McBride Engineering Solutions, Inc.
6100 West Gila Springs Pl., Suite 7
Chandler, AZ. 85226
Phone: (480) 759-9608

SITE PLAN
GRADING AND PAVING

DESIGNED: MJA/DMK
DRAWN: MQ/KPB CHECKED: BPM
DATE: 05-30-08
DWG. NO. C1
SHEET 4 OF 51

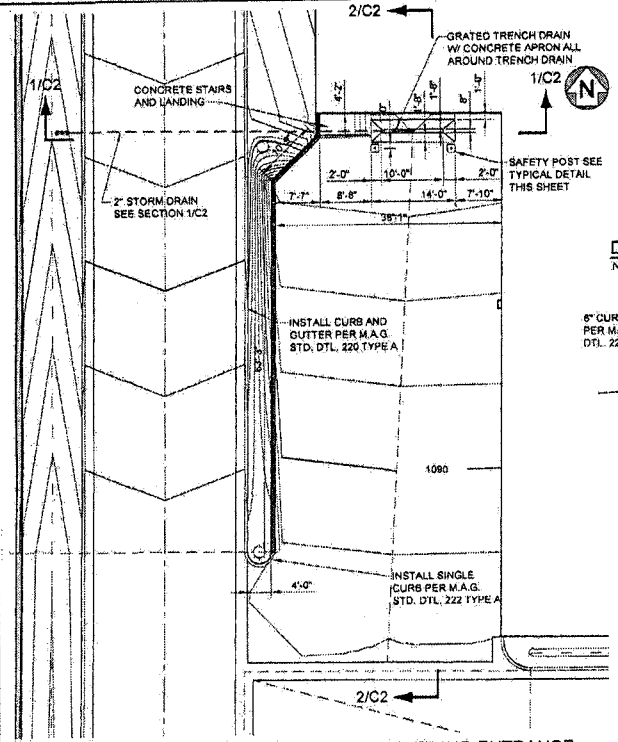

DETAIL 2/C1 - SOLIDS HANDLING ENTRANCE
SCALE: 1" = 20'-0"

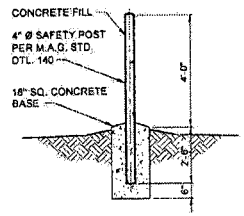

DETAIL 1 - TYPICAL SAFETY POST
NOT TO SCALE

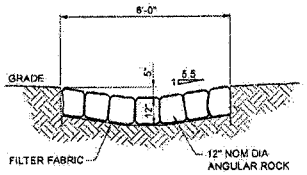

TYPICAL SECTION - LINED SWALE
NOT TO SCALE

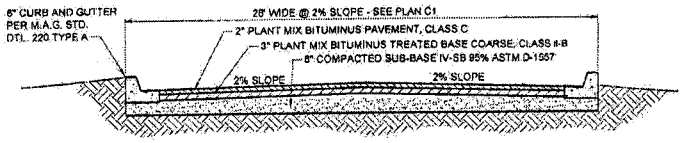

TYPICAL PAVEMENT SECTION
NOT TO SCALE

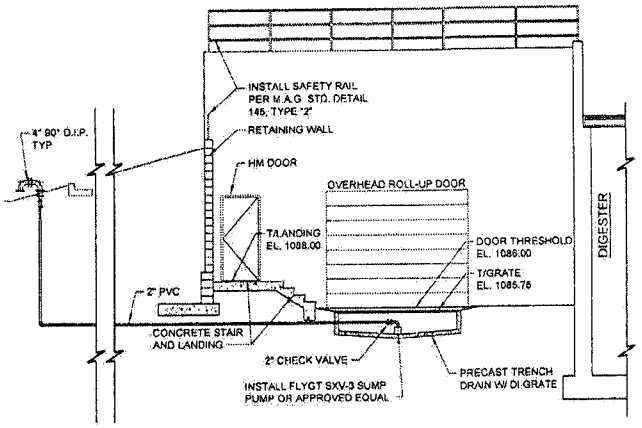

SECTION 1/C2
SCALE: 1" = 10'-0"

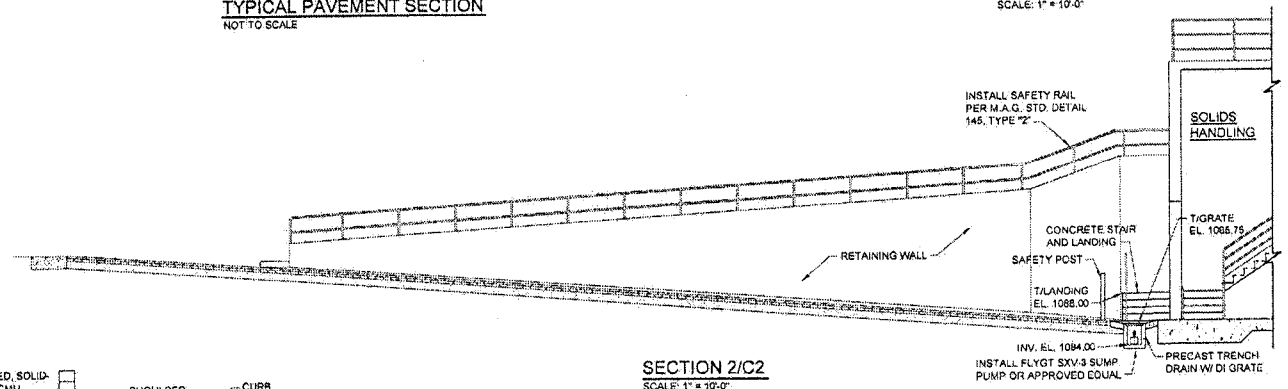

SECTION 2/C2
SCALE: 1" = 10'-0"

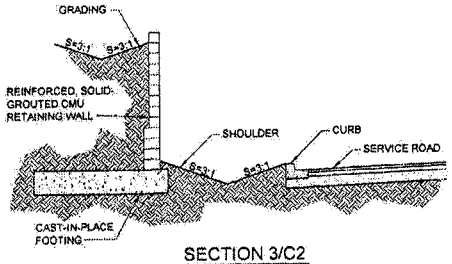

SECTION 3/C2
SCALE: 1" = 10'-0"

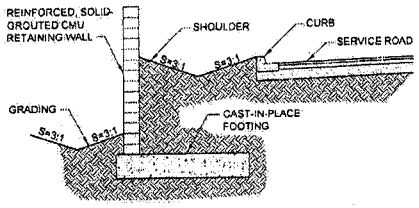

SECTION 4/C2
SCALE: 1" = 10'-0"

Registered Professional Engineer (Civil)
CERTIFICATE NO. 33441
BRIAN P. McBRIDE
Date Signed 6-2-08
ARIZONA U.S.A.
Expires 03/31/11

NO.	DATE	BY	REVISION DESCRIPTION

GLOBAL WATER
RELIABLE · RENEWABLE · REUSABLE
21410 N. 19th Ave. · Ste. 201 · Phoenix, AZ 85027
Ph: 623.580.9600 · Fx: 623.580.9659
www.gwresources.com

HASSAYAMPA NORTHEAST CAMPUS 1 WATER RECLAMATION FACILITY

McBride Engineering Solutions, Inc.
6100 West Gila Springs Pl., Suite 7
Chandler, AZ. 85226
Phone: (480) 759-9608

GRADING AND PAVING DETAILS

DESIGNED: MJA/DMK
DRAWN: MGK/PB CHECKED: BPM
DATE: 05-30-08
DWG. NO. C2
SHEET 5 OF 61

YARD PIPING NOTES

1. ALL DI AND GLDI PIPE IS PRESSURE CLASS 350.
2. RESTRAIN ALL MECHANICAL JOINT DIRECT BURIED PIPE UNLESS NOTED OTHERWISE.
3. ALL PVC PIPE IS AWWA C-900, PRESSURE CLASS 200, DR14.

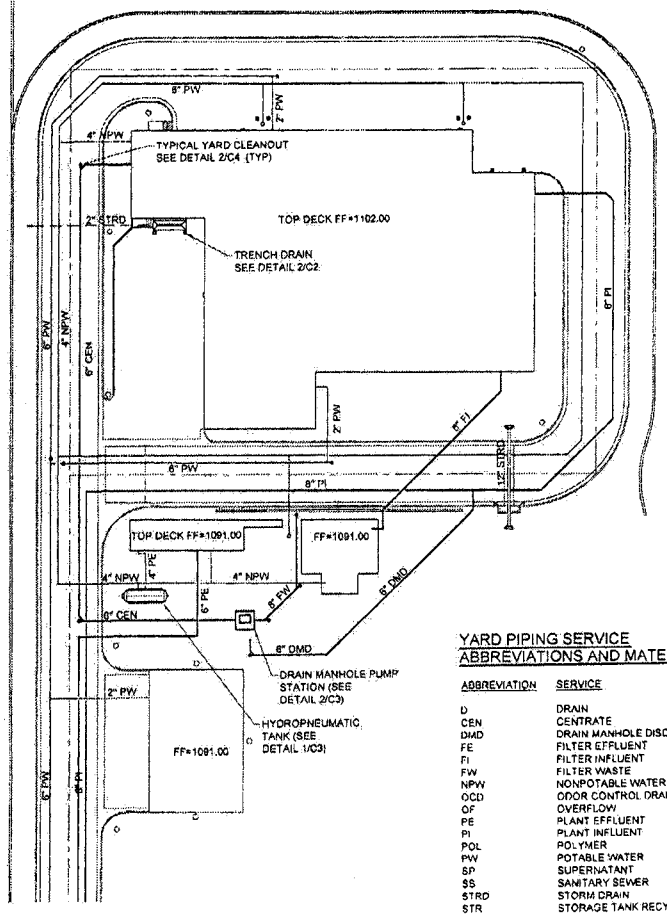

YARD PIPING PLAN

SCALE: 1" = 50'-0"

YARD PIPING SERVICE ABBREVIATIONS AND MATERIAL

ABBREVIATION	SERVICE	MATERIAL
D	DRAIN	DI
CEN	CENTRATE	GLDI
DMD	DRAIN MANHOLE DISCHARGE	PVC
FE	FILTER EFFLUENT	DI
FI	FILTER INFLUENT	DI
FW	FILTER WASTE	DI
NPW	NONPOTABLE WATER	PVC
ODD	ODOR CONTROL DRAIN	PVC
OF	OVERFLOW	PVC
PE	PLANT EFFLUENT	PVC
PI	PLANT INFLUENT	PVC
POL	POLYMER	PVC
PW	POTABLE WATER	PVC
SP	SUPERNATANT	GLDI
SS	SANITARY SEWER	DI
STRD	STORM DRAIN	RCP
STR	STORAGE TANK RECYCLE	PVC

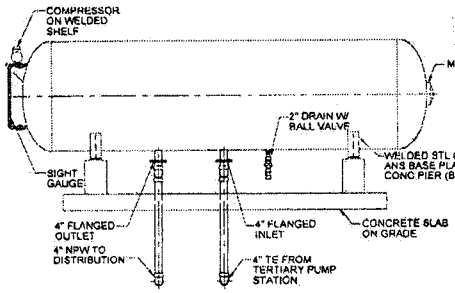

NPW HYDRONEUMATIC - SOUTH ELEVATION

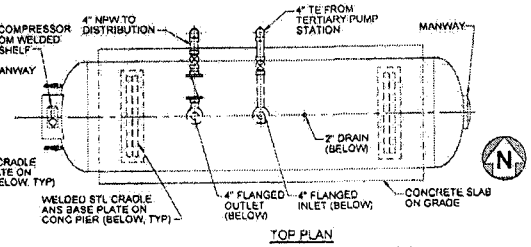

TOP PLAN

DETAIL 1/C3 - NPW HYDROPNEUMATIC

SCALE: 3/16" = 1'-0"

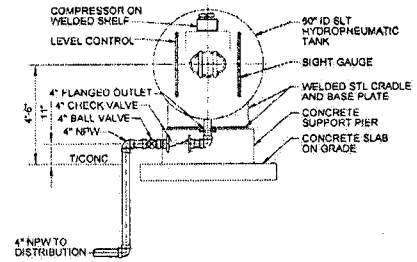

NPW HYDRONEUMATIC - WEST ELEVATION

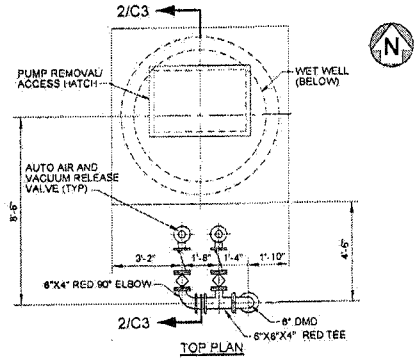

TOP PLAN

DETAIL 2/C3 - DRAIN MANHOLE PUMP STATION

SCALE: 3/16" = 1'-0"

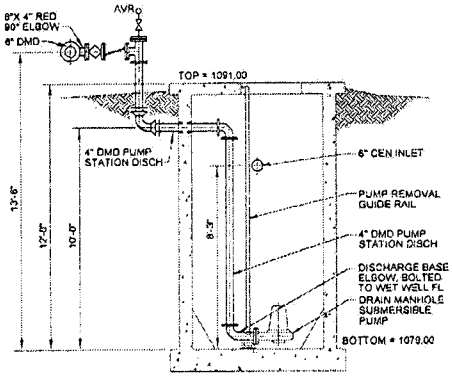

SECTION 2/C3

SCALE: 3/16" = 1'-0"

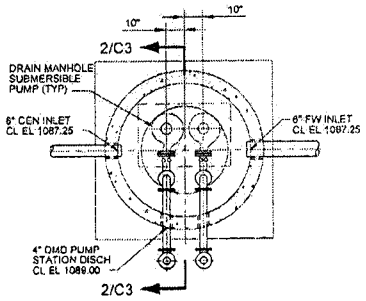

SECTIONAL PLAN

Registered Professional Engineer (Civil) CERTIFICATE NO. 33441 BRIAN P. McBRIDE Date Signed 6-2-08 ARIZONA U.S.A.

Expires 03/31/11

NO.	DATE	BY	REVISION DESCRIPTION

GLOBAL WATER
RELIABLE · RENEWABLE · REUSABLE
21410 N. 19th Ave. · Ste. 201 · Phoenix, AZ 85027
Ph: 623.580.9600 · Fx: 623.580.9659
www.globalwaterusa.com

HASSAYAMPA NORTHEAST CAMPUS 1 WATER RECLAMATION FACILITY

McBride Engineering Solutions, Inc.
6100 West Gila Springs Pl., Suite 7
Chandler, AZ. 85226
Phone: (480) 759-9608

YARD PIPING PLAN AND DETAILS

DESIGNED: MJA/DMK	
DRAWN: MG/KPB	CHECKED: BPM
DATE: 05-30-08	
DWG. NO.	C3
SHEET 6	OF 81

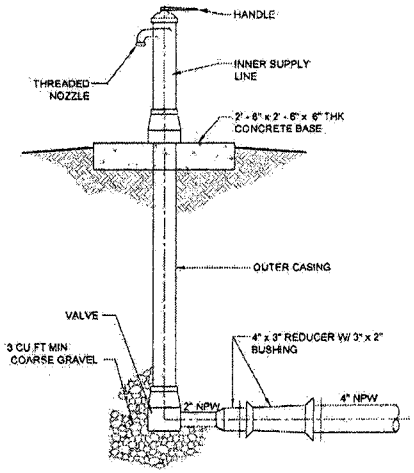

DETAIL 1/C4 - TYPICAL YARD HYDRANT

SCALE: N.T.S.

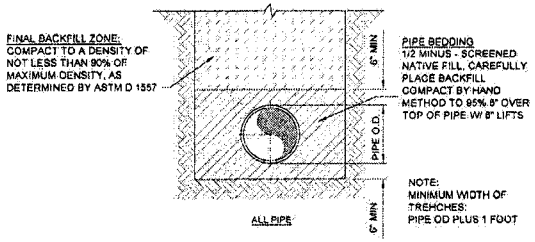

DETAIL 3/C4 - TYPICAL PIPE BEDDING AND BACKFILL

SCALE: N.T.S.

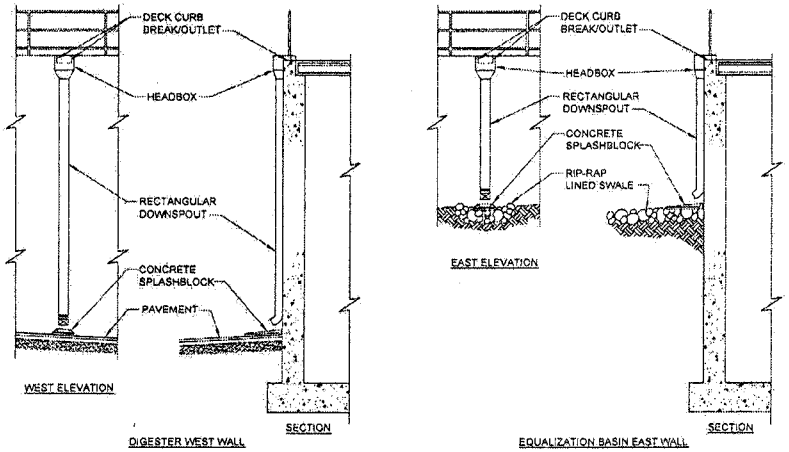

DETAIL 5/C4 - TANK DECK DOWNSPOUTS

SCALE: 1/8" = 1'-0"

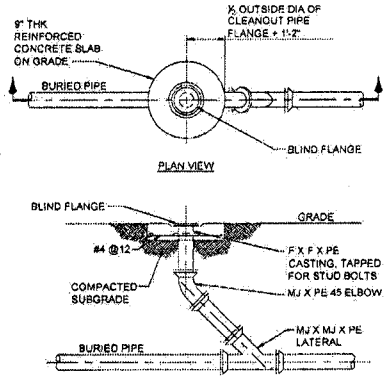

DETAIL 2/C4 - TYPICAL YARD CLEANOUT

SCALE: N.T.S.

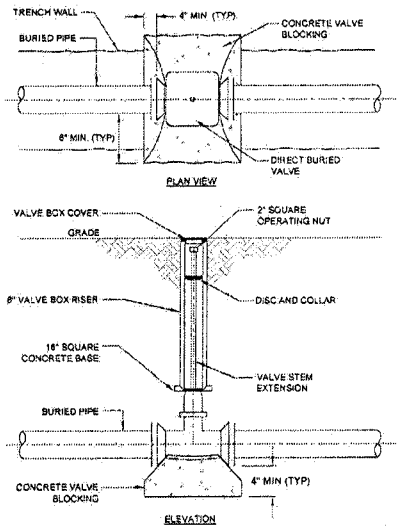

DETAIL 4/C4 - TYPICAL VALVE BOX DETAIL

SCALE: N.T.S.

Registered Professional Engineer (Civil)
CERTIFICATE NO. 33441
BRIAN P. McBRIDE
Date Signed 6-2-08
ARIZONA, U.S.A.
Expires 03/31/11

NO.	DATE	BY	REVISION DESCRIPTION

GLOBAL WATER
RELIABLE • RENEWABLE • REUSABLE
21410 N. 19th Ave. • Ste. 201 • Phoenix, AZ 85027
Ph: 623.580.8600 • Fx: 623.580.9689
www.gwresources.com

HASSAYAMPA NORTHEAST CAMPUS 1 WATER RECLAMATION FACILITY

McBride Engineering Solutions, Inc.
6100 West Gila Springs Pl., Suite 7
Chandler, AZ 85226
Phone: (480) 759-9608

YARD PIPING DETAILS

DESIGNED: MJA/DMK
DRAWN: MG/KPB CHECKED: BPM
DATE: 05-30-08
DWG. NO. C4
SHEET 7 OF 61

STRUCTURAL REQUIREMENTS

1. THE STRUCTURAL REQUIREMENTS DRAWINGS PROVIDED HERE ARE INTENDED TO DEFINE THE SCOPE OF THE STRUCTURAL WORK AND THE BASIS FOR THE STRUCTURAL DESIGN. THE CONTRACTOR SHALL SUBMIT DETAILED STRUCTURAL DESIGN DRAWINGS, IN COMPLIANCE WITH THE REQUIREMENTS, THAT MUST BE APPROVED PRIOR TO COMMENCING WORK ON ANY STRUCTURES SHOWN ON THE DRAWINGS.

2. GENERAL NOTES SHOWN ON THIS CONTRACT DOCUMENT ARE SUPPLEMENTAL TO THE REFERENCED CODE REQUIREMENTS WHICH SHALL BE REFERRED TO FOR ADDITIONAL REQUIREMENTS.

3. OBTAIN ENGINEER'S APPROVAL FOR ALL SUBSTITUTIONS.

4. DO NOT SCALE DRAWINGS. IF DIMENSIONS OR DETAILS ARE NOT CLEAR, OR DISCREPANCIES EXIST ON DRAWINGS CONTACT ENGINEER WITH WRITTEN CLARIFICATION REQUEST.

5. CHECK ALL DIMENSIONS ON STRUCTURAL REQUIREMENTS DRAWINGS AGAINST MECHANICAL, CIVIL, AND ELECTRICAL DRAWINGS.

6. VERIFY LOCATIONS AND SIZE OF ALL OPENINGS THROUGH FLOORS, ROOFS AND WALLS WITH MECHANICAL, CIVIL AND ELECTRICAL REQUIREMENTS.

GOVERNING CODES

1. WATER RETAINING CONCRETE STRUCTURES	ACI 350-01
2. BUILDING LOADS	UBC 1997
3. PLACEMENT AND DETAILING OF CONCRETE REINFORCEMENT	ACI 315-94
4. STRUCTURAL STEEL	AISC-ASD 9TH EDITION
5. MASONRY STRUCTURES	ACI 530-99/ASCE 5-99

DESIGN LOADS

1. LIVE LOADS USED IN DESIGN – SEE PLAN.

2. SEISMIC LOADS FOR BUILDINGS AND ABOVE GRADE STRUCTURES PER UBC 1997.

3. SEISMIC LOADS FOR WATER RETAINING STRUCTURES PER ACI 350.3-01.

4. WIND LOADS FOR BUILDINGS AND ABOVE GRADE STRUCTURES PER UBC 1997
   REFERENCE WIND VELOCITY : 75 MPH
   EXPOSURE CLASSIFICATION PER UBC: C

5. LIVE LOAD USED TO DESIGN STAIR: 100 PSF (PROJECTED)

FOUNDATIONS

1. COORDINATE FOUNDATION DESIGN WITH GEOTECHNICAL ENGINEER.

2. PLACE FOOTING ON UNDISTURBED NATURAL MATERIALS OR STRUCTURAL FILL AS APPROVED BY THE GEOTECHNICAL ENGINEER.

3. DESIGN LOAD SOIL BEARING PRESSURE FOR RETAINING WALLS AND SPREAD FOOTINGS:
   I. ON UNDISTURBED NATURAL SOILS 2500 PSF
   II. ON COMPACTED FILL 2000 PSF

4. DESIGN LOAD SOIL BEARING PRESSURE FOR MAT FOUNDATION: 4000 PSF

5. REFER TO CIVIL DRAWINGS FOR EXTERIOR WALKWAYS, CURBS, WALKS, RAMPS, RAILING, SLAB DEPRESSIONS, DRAINS, PIPING ETC.

STRUCTURAL TEST AND INSPECTION REQUIREMENTS

IN ADDITION TO ANY REQUIREMENTS BY THE GOVERNING BUILDING DEPARTMENT

1. REFER TO THE 1997 UBC FOR AMPLIFICATION OF THE FOLLOWING REQUIREMENTS.

	YES	NO
2. FOUNDATIONS:		
A. COMPACTED FILL INCLUDING UTILITY TRENCHES	☒	☐
B. VISUAL EXAMINATION & APPROVAL OF ALL FOUNDATION EXCAVATIONS	☒	☐
3. CONCRETE:		
A. CONTINUOUS INSPECTION & TEST CYLINDERS FOR CONCRETE OVER 2500 PSI	☒	☐
B. BOLTS AND EMBEDDED PLATES INSTALLED IN CONCRETE (DURING INSTALLATION AND PLACING OF CONCRETE)	☒	☐
4. REINFORCING STEEL:		
A. PLACING OF REINFORCING	☒	☐
B. SAMPLING & TESTING OF STEEL (MILL REPORTS & IDENTIFICATION OF STEEL)	☒	☐
5. WELDING:		
A. CONTINUOUS INSPECTION OF ALL STRUCTURAL STEEL FIELD WELDING (INCLUDING DECKING AND WELDED STUDS)	☒	☐
B. NONDESTRUCTIVE TESTING OF FULL PENETRATION WELDS	☐	☒
C. STRUCTURAL LIGHT GAGE METAL FRAMING	☐	☒
6. ANCHORAGE AND CONNECTIONS:		
A. HIGH-STRENGTH BOLTING	☐	☒
B. EXPANSION BOLTS IN CONCRETE AND MASONRY	☒	☐
C. INSTALLATION OF EPOXY ANCHORED BOLTS, RODS, OR REBAR	☒	☐
7. MASONRY:		
A. SAMPLING AND TESTING OF MASONRY	☒	☐
B. TESTING OF GROUT AND MORTAR PRISMS	☒	☐
C. CONTINUOUS INSPECTION	☒	☐
D. COMPRESSION PRISMS	☒	☐
8. INSULATION CONCRETE FILL:		
A. THICKNESS AND COMPRESSIVE STRENGTH	☐	☒
9. STRUCTURAL STEEL:		
A. MILL REPORTS AND IDENTIFICATION OF STEEL (AFFIDAVIT OF COMPLIANCE)	☒	☐
B. SAMPLING AND TESTING	☐	☒

10. APPROVED FABRICATORS: (MUST SUBMIT CERTIFICATION OF COMPLIANCE) FOR ALL OFF-SITE FABRICATION SUCH AS STRUCTURAL STEEL, STEEL JOISTS, PRECAST CONCRETE, ETC.

ABBREVIATIONS

AB	ANCHOR BOLT	L	ANGLE
B/	BOTTOM OF	LBS OR #	POUNDS
BLDG	BUILDING	LGS	LIGHT GAGE STEEL
BP	BASE PLATE	LLH	LONG LEG HORIZONTAL
BRCG	BRACING	LLV	LONG LEG VERTICAL
C/C	CENTER TO CENTER	LP	LOW POINT
CG	CONTROL GROOVE	MO	MASONRY OPENING
CJ	CONSTRUCTION JOINT	MFR	MANUFACTURER
CL	CENTERLINE	NF	NEAR FACE
CLR	CLEAR	NTS	NOT TO SCALE
CMU	CONCRETE MASONRY UNIT	OC	ON CENTER
CONC	CONCRETE	PL	PLATE
DIA	DIAMETER	PC	PRECAST CONCRETE
DT	DOUBLE TEE	PS	PIPE SUPPORT
DWG	DRAWING	PSI	POUNDS PER SQUARE INCH
EEP	ELECTRICAL EQUIPMENT PAD	REINF	REINFORCING; REINFORCEMENT
EF	EACH FACE	REQD	REQUIRED
EJ	EXPANSION JOINT	SHT	SHEET
EL	ELEVATION	SP	SPACING
EP	EQUIPMENT PAD	SPEC	SPECIFICATIONS
EXIST	EXISTING	SQR	SQUARE
FDN	FOUNDATION	SS	STAINLESS STEEL
FF	FAR FACE	STL	STEEL
FTG	FOOTING	T&B	TOP AND BOTTOM
GA	GAUGE	T/	TOP OF
HC	HOLLOW CORE	TOS	TOP OF STEEL
HP	HIGH POINT	TYP	TYPICAL, TYPICALLY
INFO	INFORMATION	UNO	UNLESS NOTED OTHERWISE
KSI	KIPS PER SQUARE INCH	WP	WORK POINT
		WS	WATERSTOP

TIGHTNESS TESTING FOR WATER RETAINING STRUCTURES

1. PERFORM TIGHTNESS TESTING FOR ALL WATER RETAINING STRUCTURES CONFORMED TO CODE REQUIREMENTS OF ACI 350-01 PRIOR TO BACKFILLING.

TEST PREPARATION:

a) SECURELY SEAL ALL TANK PENETRATIONS AND OUTLETS.
b) INSTALL WATER LEVEL MEASURING GAUGES AT 2 OPPOSITE LOCATIONS.
c) FILL THE TANK TO THE OVERFLOW LEVEL.
d) ALLOW 3 DAYS FOR THE EFFECTS OF WATER ABSORPTION INTO CONCRETE.
e) AFTER 3 DAYS, REFILL THE TANK TO THE OVERFLOW LEVEL.

TEST MEASUREMENTS:

a) MEASURE AND RECORD WATER LEVEL AT 24 HOUR INTERVALS FOR 3 DAYS.
b) MEASURE AND RECORD WATER TEMPERATURE AT 18 INCHES BELOW WATER SURFACE AT THE START AND ENEND OF EACH TEST.
c) VISUALLY INSPECT EXTERIOR OF WALLS, TANK PENETRATIONS, OUTLETS AND CONSTRUCTION JOINTS FOR ***SIGNS OF LEAKAGE DURING TEST PERIOD AND MARK THE LOCATIONS OF THE LEAKAGE.

2. LOSS OF WATER IN EXCESS OF 0.1% OF THE TOTAL WATER VOLUME IN ANY 24 HOUR TEST PERIOD WILL REQUIRE REMEDIATION.

Registered Professional Engineer (Civil)
CERTIFICATE NO. 33441
BRIAN P. McBRIDE
Date Signed 6-2-08
ARIZONA U.S.A.
Expires 03/31/11

NO.	DATE	BY	REVISION DESCRIPTION

GLOBAL WATER
RELIABLE · RENEWABLE · REUSABLE
21410 N. 19th Ave. / Ste. 201 / Phoenix, AZ 85027
Ph: 623.580.0600 · Fx: 623.580.9689
www.gwresources.com

HASSAYAMPA NORTHEAST CAMPUS 1 WATER RECLAMATION FACILITY

McBride Engineering Solutions, Inc.
6100 West Gila Springs Pl., Suite 7
Chandler, AZ. 85226
Phone: (480) 759-9608

STRUCTURAL REQUIREMENTS GENERAL NOTES

DESIGNED: MJA/DMK
DRAWN: MG/KPB CHECKED: BPM
DATE: 05-30-08
DWG. NO. S1
SHEET 8 OF 81

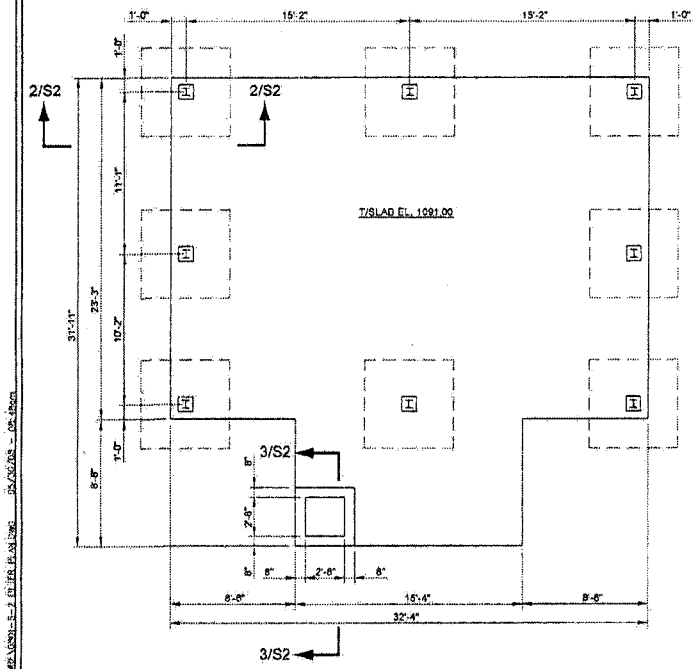

BASE PLAN
SCALE: 1/8" = 1'-0"

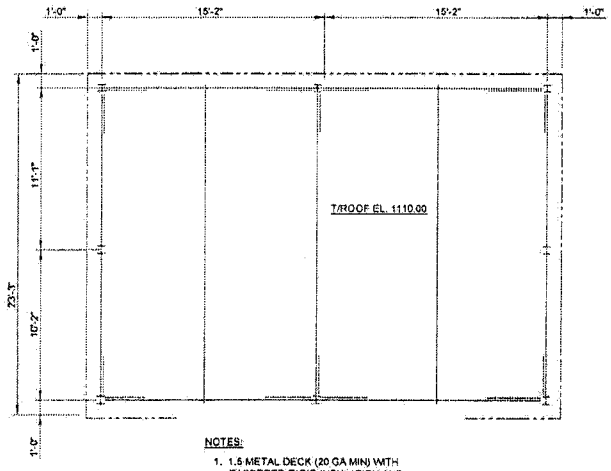

NOTES:

1. 1.5 METAL DECK (20 GA MIN) WITH TAPPERED RIGID INSULATION AND 3 PLY ROOFING.
2. REQUIRED ROOF LIVE LOAD = 20 PSF.

ROOF PLAN
SCALE: 1/8" = 1'-0"

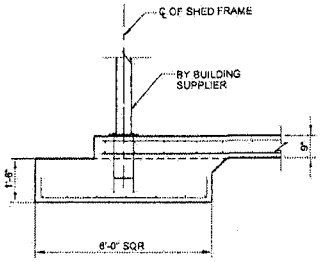

SECTION 2/S2
SCALE: 1/4" = 1'-0"

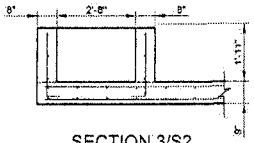

SECTION 3/S2
SCALE: 1/4" = 1'-0"

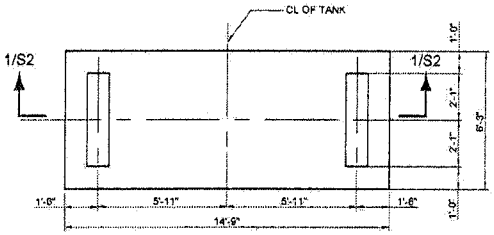

BASE PLAN
SCALE: 3/16" = 1'-0"

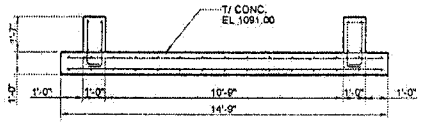

SECTION 1/S2
SCALE: 3/16" = 1'-0"

REQUIRED LOAD = 30 KIPS
REQUIRED SOIL BEARING CAPACITY = 2000PSF

FOUNDATION FOR HYDROPNUEMATIC TANK

Registered Professional Engineer (Civil)
CERTIFICATE NO. 33441
BRIAN P. McBRIDE
Date Signed 6-2-08
ARIZONA U.S.A.
Expires 03/31/11

NO.	DATE	BY	REVISION DESCRIPTION

GLOBAL WATER
RELIABLE · RENEWABLE · REUSABLE
21410 N. 19th Ave. · Ste. 201 · Phoenix, AZ 85027
Ph: 623.580.9600 · Fx: 623.580.9059
www.gwresources.com

HASSAYAMPA NORTHEAST CAMPUS 1 WATER RECLAMATION FACILITY

McBride Engineering Solutions, Inc.
6100 West Gila Springs Pl., Suite 7
Chandler, AZ. 85226
Phone: (480) 759-9608

STRUCTURAL REQUIREMENTS
FILTER PLAN, ROOF PLAN
HYDROPNUEMATIC TANK

DESIGNED: MJA/DMK
DRAWN: MG/KPB CHECKED: BPM
DATE: 05-30-08
DWG. NO. S2
SHEET 9 OF 81

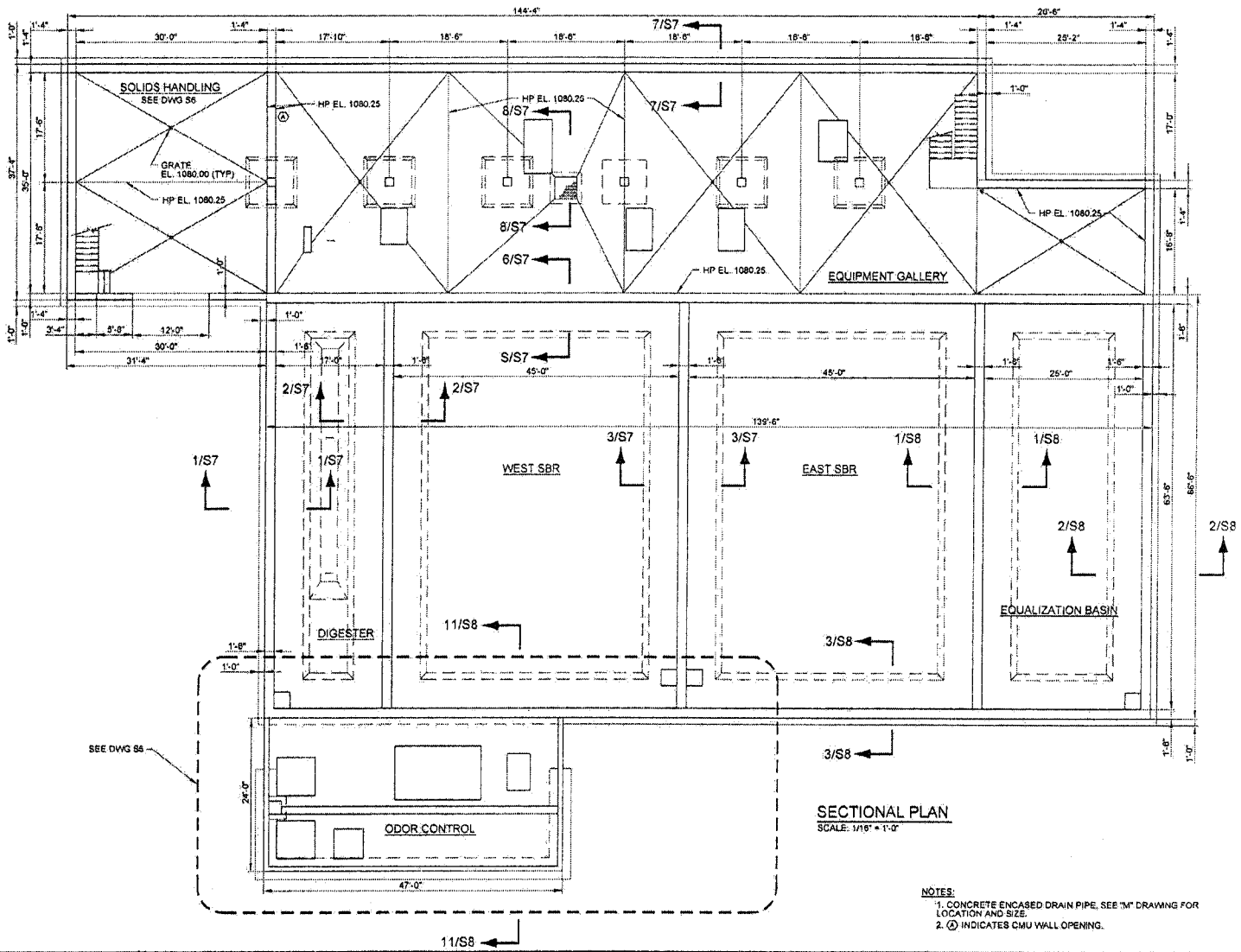

SECTIONAL PLAN

SCALE: 1/16" = 1'-0"

NOTES:

1. CONCRETE ENCASED DRAIN PIPE, SEE "M" DRAWING FOR LOCATION AND SIZE.
2. Ⓐ INDICATES CMU WALL OPENING.

Registered Professional Engineer (Civil)
CERTIFICATE NO. 33441
BRIAN P. McBRIDE
Date Signed 6-2-08
ARIZONA
Expires 03/31/11

NO.	DATE	BY	REVISION DESCRIPTION

GLOBAL WATER
RELIABLE · RENEWABLE · REUSABLE
21410 N. 19th Ave. · Ste. 201 · Phoenix, AZ 85027
Ph: 623.580.9600 · Fx: 623.580.9659
www.gwresources.com

HASSAYAMPA NORTHEAST CAMPUS 1 WATER RECLAMATION FACILITY

McBride Engineering Solutions, Inc.
6100 West Gila Springs Pl., Suite 7
Chandler, AZ. 85226
Phone: (480) 759-9608

STRUCTURAL REQUIREMENTS
MAIN PROCESS STRUCTURE
SECTIONAL PLAN

DESIGNED: MJA/DMK
DRAWN: MG/KPB CHECKED: BPM
DATE: 05-30-08
DWG. NO. S3
SHEET 10 OF 81

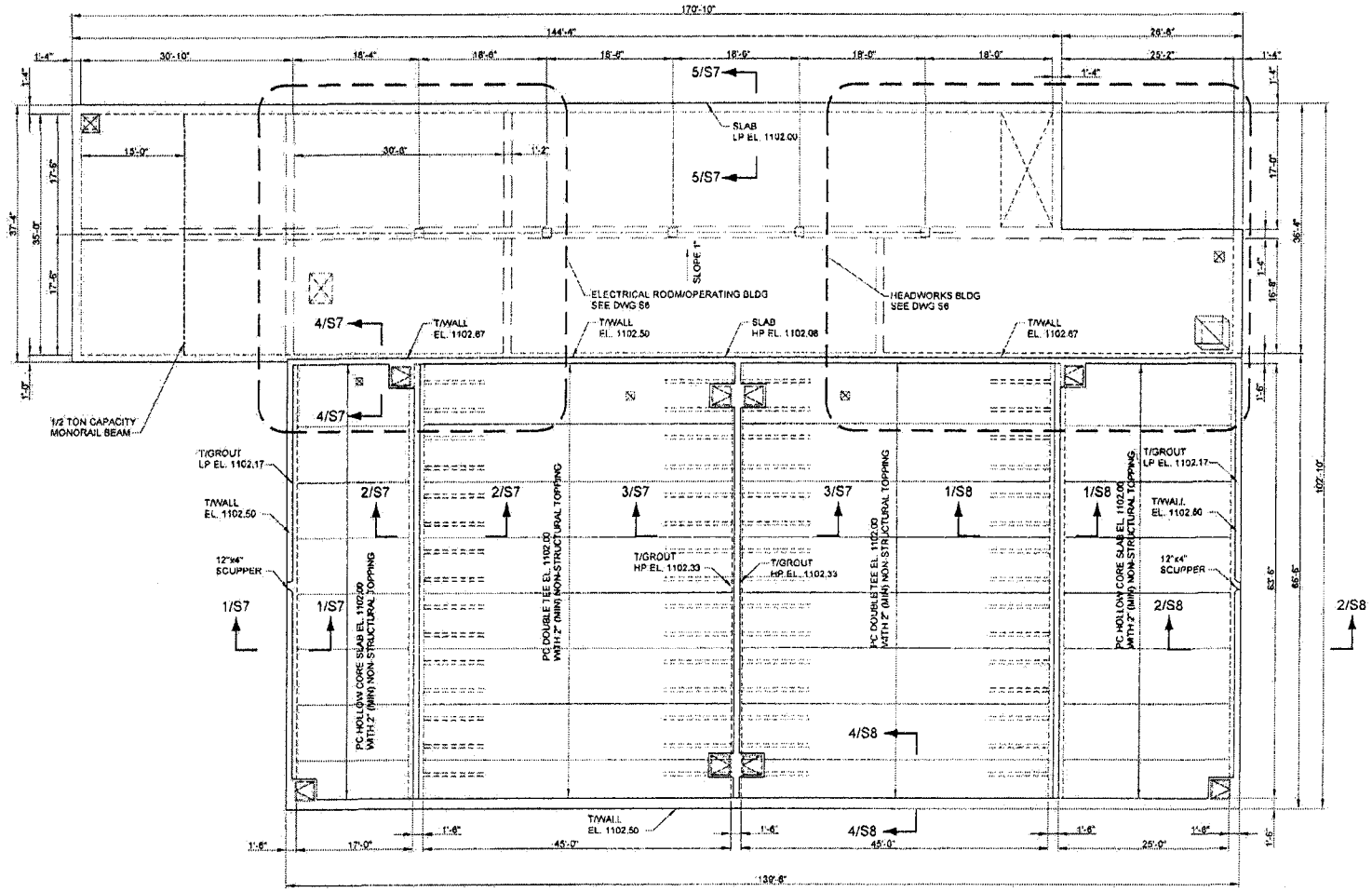

SECTIONAL PLAN

SCALE: 1/16" = 1'-0"

Registered Professional Engineer (Civil)
CERTIFICATE NO. 33441
BRIAN P. McBRIDE
Date Signed 6-2-08
ARIZONA, U.S.A.
Expires 03/31/11

NO.	DATE	BY	REVISION DESCRIPTION

GLOBAL WATER
RELIABLE · RENEWABLE · REUSABLE
21410 N. 19th Ave., Ste. 201 · Phoenix, AZ 85027
Ph: 623.580.9000 · Fx: 623.580.9059
www.gwresources.com

HASSAYAMPA NORTHEAST
CAMPUS 1 WATER
RECLAMATION FACILITY

McBride Engineering Solutions, Inc.
6100 West Gila Springs Pl., Suite 7
Chandler, AZ. 85226
Phone: (480) 759-9608

STRUCTURAL REQUIREMENTS
MAIN PROCESS STRUCTURE
TOP PLAN

DESIGNED: MJA/DMK
DRAWN: MO/KPB | CHECKED: BPM
DATE: 05-30-08
DWG. NO. S4
SHEET 11 OF 61

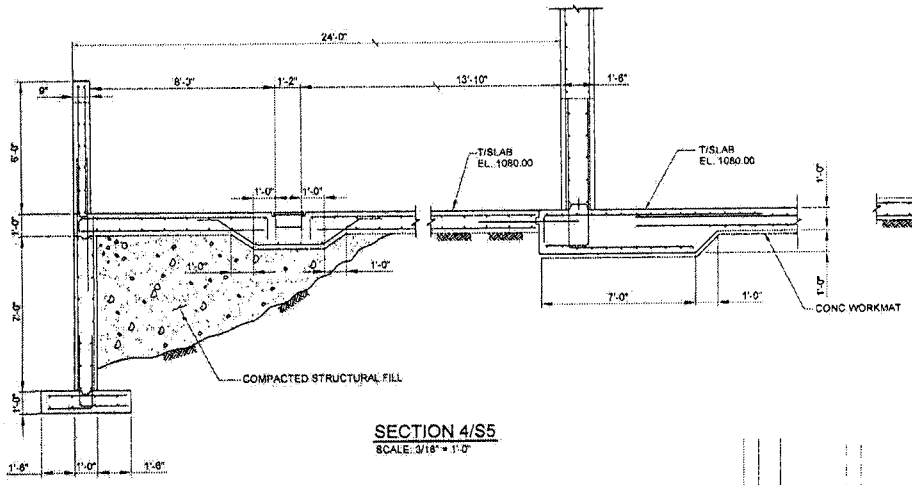

SECTION 4/S5
SCALE: 3/16" = 1'-0"

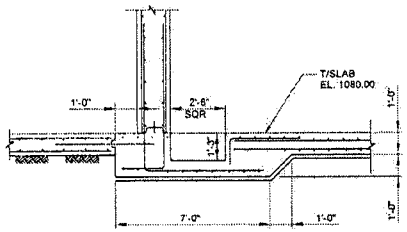

SECTION 1/S5
SCALE: 3/16" = 1'-0"

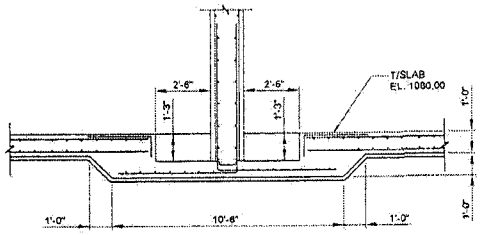

SECTION 2/S5
SCALE: 3/16" = 1'-0"

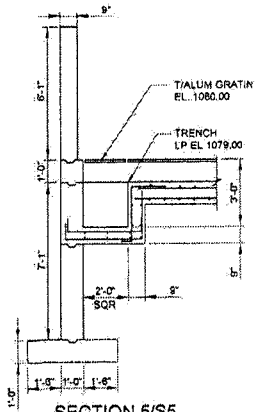

SECTION 5/S5
SCALE: 3/16" = 1'-0"

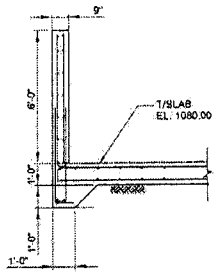

SECTION 3/S5
SCALE: 3/16" = 1'-0"

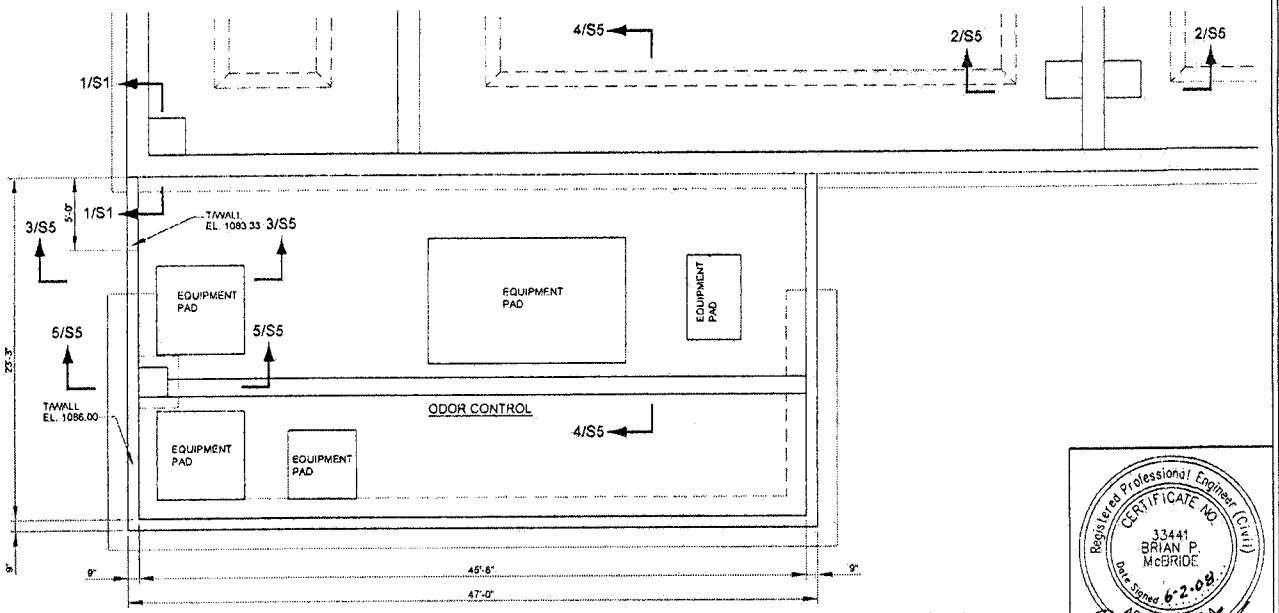

ODOR CONTROL
SCALE: 1/8" = 1'-0"

Registered Professional Engineer (Civil)
CERTIFICATE NO.
33441
BRIAN P.
McBRIDE
Date Signed 6-2-09
ARIZONA, U.S.A.
Expires 03/31/11

NO.	DATE	BY	REVISION DESCRIPTION

GLOBAL WATER
RELIABLE · RENEWABLE · REUSABLE
21410 N. 19th Ave. · Ste. 201 · Phoenix, AZ 85027
Ph: 623.580.9600 · Fx: 623.580.9699
www.gwresources.com

HASSAYAMPA NORTHEAST
CAMPUS 1 WATER
RECLAMATION FACILITY

McBride Engineering Solutions, Inc.
6100 West Gila Springs Pl., Suite 7
Chandler, AZ. 85226
Phone: (480) 759-9608

STRUCTURAL REQUIREMENTS
MAIN PROCESS STRUCTURE
SECTIONAL PLAN

DESIGNED: MJA/DMK
DRAWN: MG/KPB CHECKED: BPM
DATE: 05-30-08
DWG. NO. S5
SHEET 12 OF 81

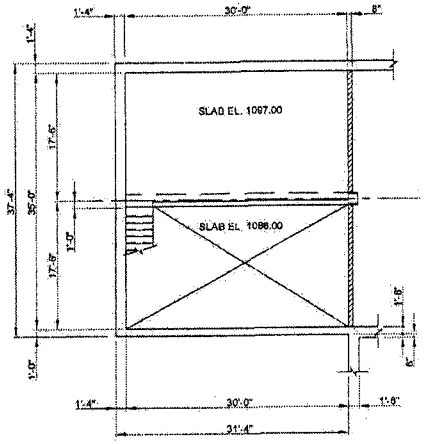

REQUIRED LIVE LOAD = 150 PSF

SOLIDS HANDLING PLAN AT EL. 1097.00, 1086.00

SCALE: 1/16" = 1'-0"

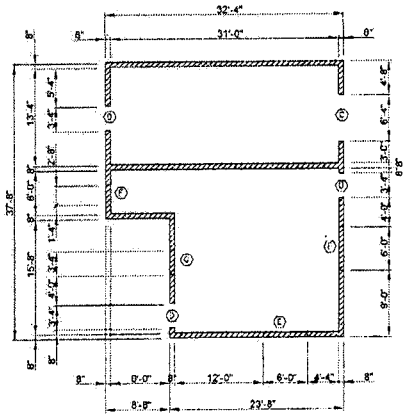

NOTES:
Ⓓ INDICATES CMU WALL OPENING

ELECTRICAL ROOM/OPERATIONS BLDG PLAN AT EL. 1102.00

SCALE: 1/16" = 1'-0"

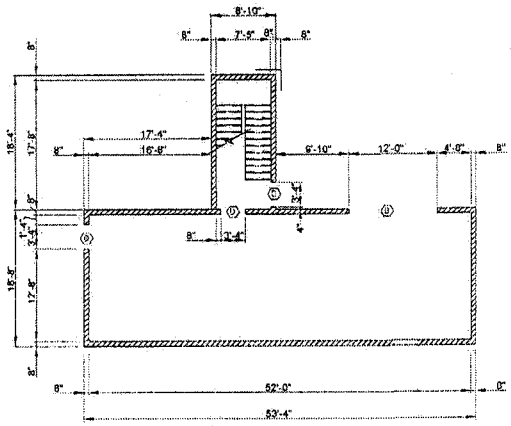

NOTES:
Ⓓ INDICATES CMU WALL OPENING

HEADWORKS PLAN AT EL. 1102.00

SCALE: 1/16" = 1'-0"

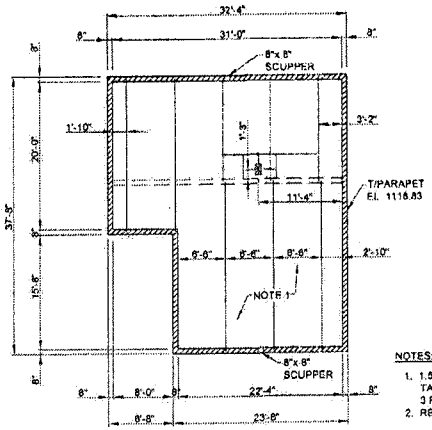

NOTES:
1. 1.5 METAL DECK (20 GA MIN) WITH TAPPERED RIGID INSULATION AND 3 PLY ROOFING.
2. REQUIRED ROOF LIVE LOAD = 20 PSF.

ELECTRICAL ROOM/OPERATIONS BLDG ROOF FRAMING PLAN

SCALE: 1/16" = 1'-0"

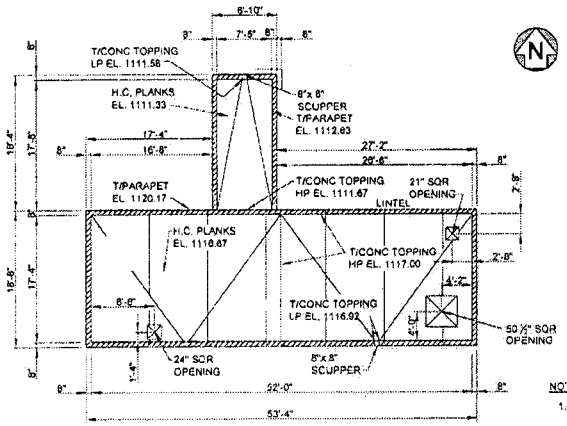

NOTES:
1. REQUIRED ROOF LIVE LOAD = 20 PSF.

HEADWORKS ROOF FRAMING PLAN

SCALE: 1/16" = 1'-0"

Registered Professional Engineer (Civil)
CERTIFICATE NO. 33441
BRIAN P. McBRIDE
Date Signed 6-2-08
ARIZONA U.S.A.
Expires 03/31/11

NO.	DATE	BY	REVISION DESCRIPTION

GLOBAL WATER
RELIABLE · RENEWABLE · REUSABLE
21410 N. 19th Ave. · Ste. 201 · Phoenix, AZ 85027
Ph: 623.580.6600 · Fx: 623.580.9659
www.gwresources.com

HASSAYAMPA NORTHEAST CAMPUS 1 WATER RECLAMATION FACILITY

McBride Engineering Solutions, Inc.
6100 West Gila Springs Pl., Suite 7
Chandler, AZ. 85226
Phone: (480) 759-9608

STRUCTURAL REQUIREMENTS SOLIDS HANDLING/ ELEC. ROOM/ OPERATIONS BLDG/ HEADWORKS

DESIGNED: MJA/DMK
DRAWN: MG/KPG CHECKED: BPM
DATE: 05-30-08
DWG. NO. S6
SHEET 13 OF 01

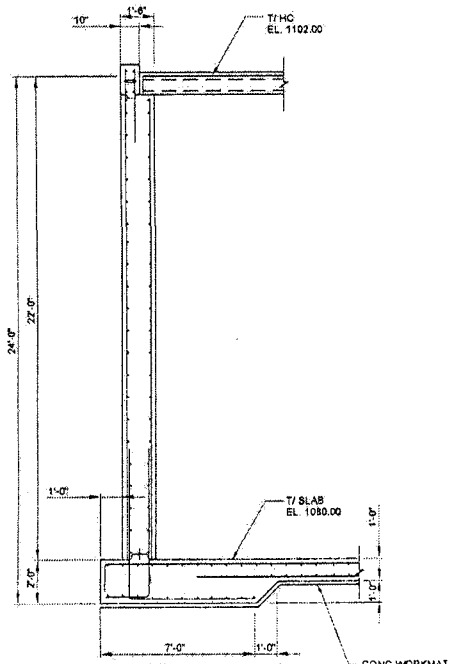

SECTION 1/S3,S4
SCALE: 3/16" = 1'-0"

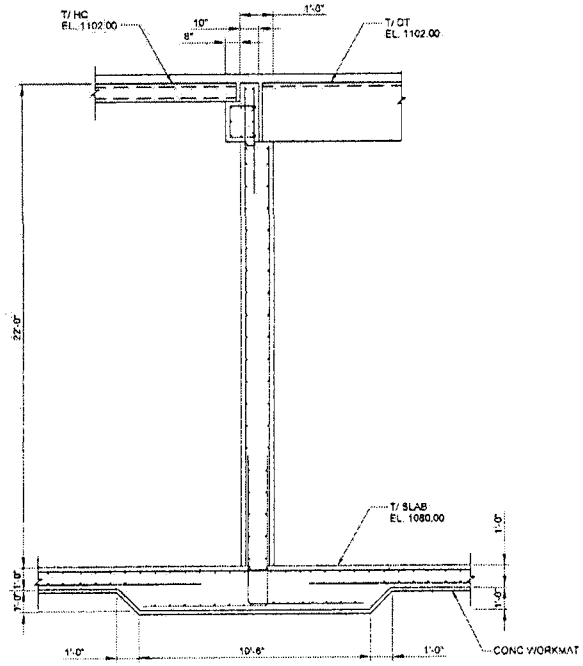

SECTION 2/S3,S4
SCALE: 3/16" = 1'-0"

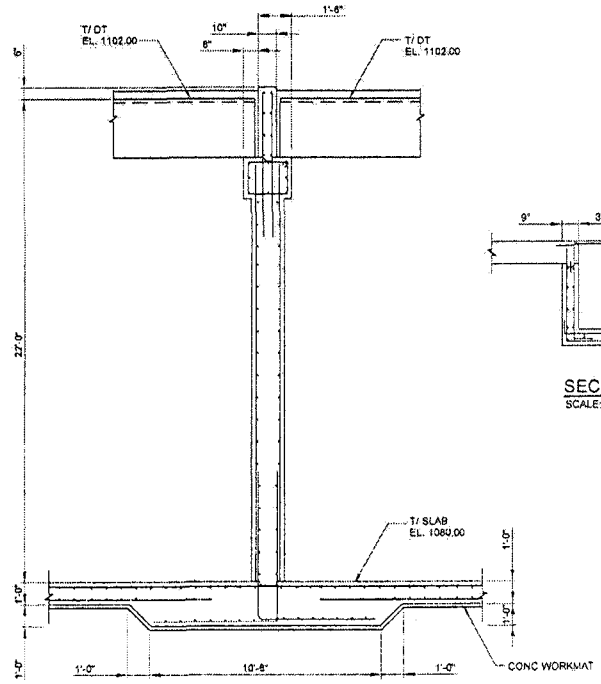

SECTION 3/S3,S4
SCALE: 3/16" = 1'-0"

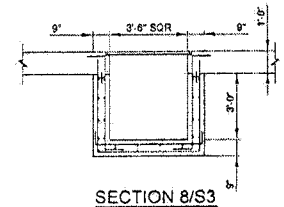

SECTION 8/S3
SCALE: 3/16" = 1'-0"

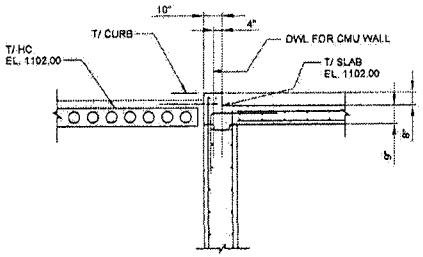

SECTION 4/S4
SCALE: 3/16" = 1'-0"

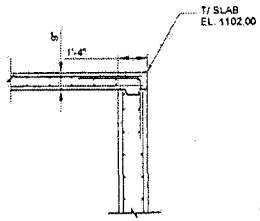

SECTION 5/S4
SCALE: 3/16" = 1'-0"

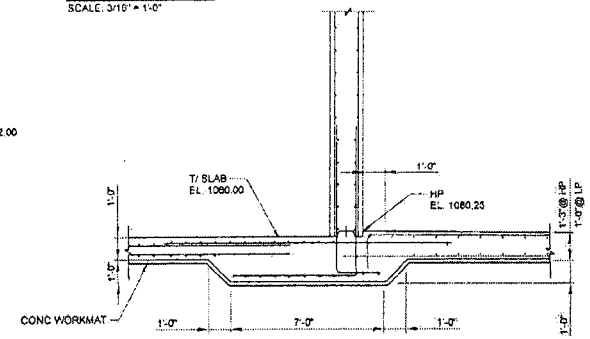

SECTION 6/S3
SCALE: 3/16" = 1'-0"

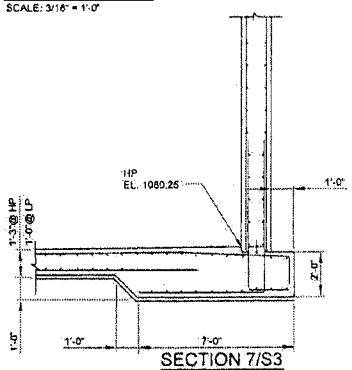

SECTION 7/S3
SCALE: 3/16" = 1'-0"

Registered Professional Engineer (Civil)
CERTIFICATE NO. 33441
BRIAN P. McBRIDE
Date Signed 6-2-08
ARIZONA U.S.A.
Expires 03/31/11

NO.	DATE	BY	REVISION DESCRIPTION

GLOBAL WATER
RELIABLE • RENEWABLE • REUSABLE
21410 N. 19th Ave. - Ste. 201 - Phoenix, AZ 85027
Ph: 623.580.9600 - Fx: 623.580.9650
www.gwresources.com

HASSAYAMPA NORTHEAST
CAMPUS 1 WATER
RECLAMATION FACILITY

McBride Engineering Solutions, Inc.
6100 West Gila Springs Pl., Suite 7
Chandler, AZ. 85226
Phone: (480) 759-9608

STRUCTURAL REQUIREMENTS
SECTIONS

DESIGNED: MJA/DMK
DRAWN: MG/KPB | CHECKED: BPM
DATE: 05-30-08
DWG. NO. S7
SHEET 14 OF 81

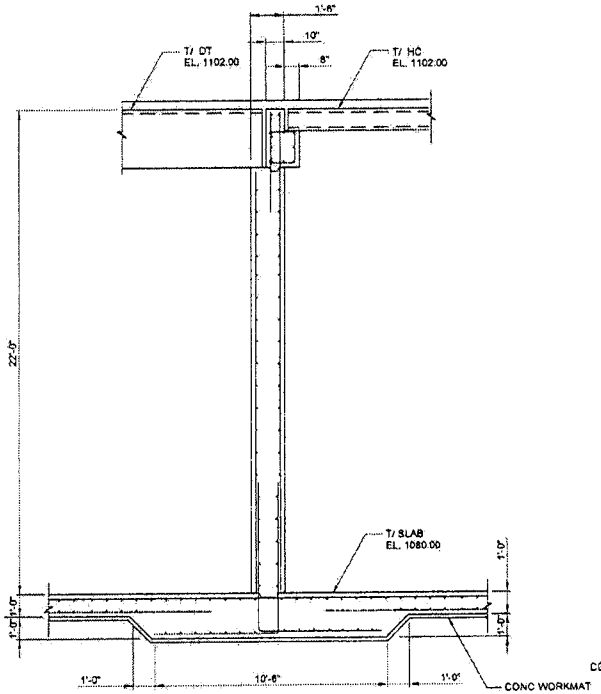

SECTION 1/S3,S4
SCALE: 3/16" = 1'-0"

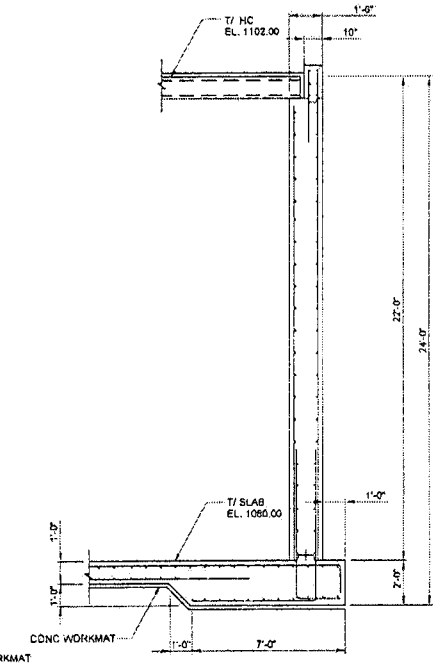

SECTION 2/S3,S4
SCALE: 3/16" = 1'-0"

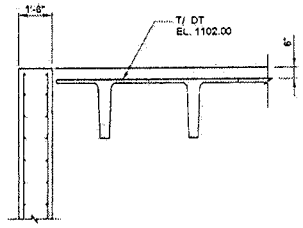

SECTION 4/S4
SCALE: 3/16" = 1'-0"

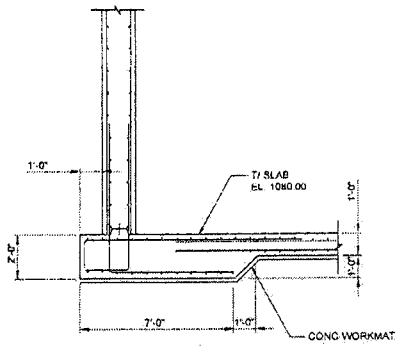

SECTION 3/S3
SCALE: 3/16" = 1'-0"

Registered Professional Engineer (Civil)
CERTIFICATE NO. 33441
BRIAN P. McBRIDE
Date Signed 6-2-08
ARIZONA, U.S.A.
Expires 03/31/11

NO.	DATE	BY	REVISION DESCRIPTION

GLOBAL WATER
RELIABLE · RENEWABLE · REUSABLE
21410 N. 19th Ave. · Ste. 201 · Phoenix, AZ 85027
Ph: 623.580.9600 · Fax: 623.580.9699
www.globalwatersolutions.com

HASSAYAMPA NORTHEAST
CAMPUS 1 WATER
RECLAMATION FACILITY

McBride Engineering Solutions, Inc.
6100 West Gila Springs Pl., Suite 7
Chandler, AZ. 85226
Phone: (480) 759-9608

STRUCTURAL REQUIREMENTS
SECTIONS

DESIGNED: MJA/DMK
DRAWN: MG/KPB CHECKED: BPM
DATE: 05-30-08
DWG. NO. S8
SHEET 15 OF 61

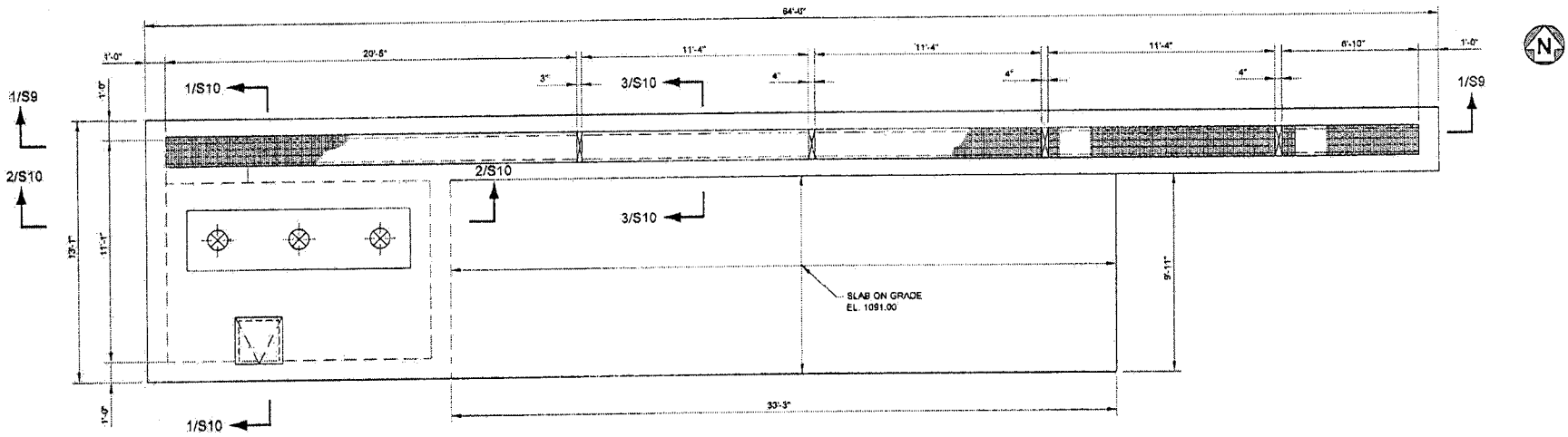

TOP PLAN
SCALE: 3/16" = 1'-0"

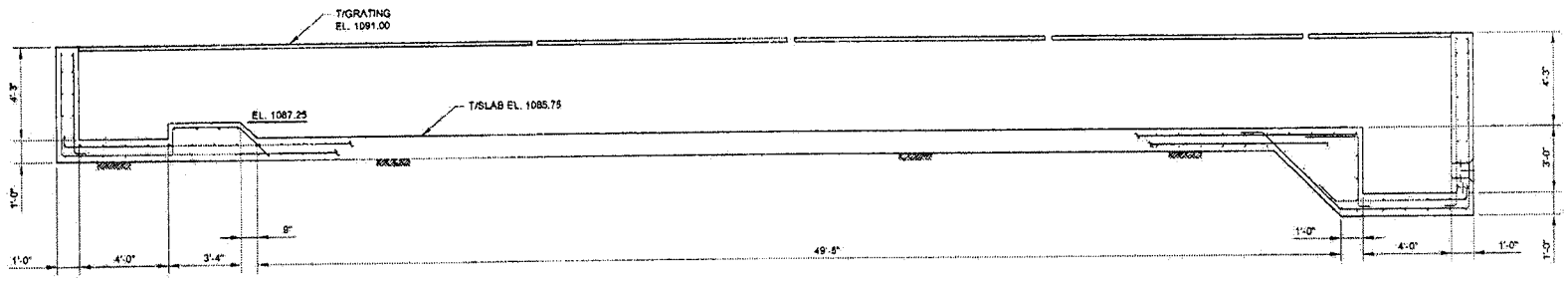

SECTION 1/S9
SCALE: 3/16" = 1'-0"

Registered Professional Engineer (Civil)
CERTIFICATE NO.
33441
BRIAN P.
McBRIDE
Date Signed 6-2-08
ARIZONA U.S.A.
Expires 03/31/11

NO.	DATE	BY	REVISION DESCRIPTION

GLOBAL WATER
RELIABLE · RENEWABLE · REUSABLE
21410 N. 19th Ave., Ste. 201 · Phoenix, AZ 85027
Ph: 623.580.9600 · Fx: 623.580.9659
www.gwrsources.com

HASSAYAMPA NORTHEAST
CAMPUS 1 WATER
RECLAMATION FACILITY

McBride Engineering Solutions, Inc.
6100 West Gila Springs Pl., Suite 7
Chandler, AZ. 85226
Phone: (480) 759-9608

STRUCTURAL REQUIREMENTS
ULTRAVIOLET DISINFECTION
AND TERTIARY PUMP
STATION PLANS AND DETAILS

DESIGNED: MJA/DMK
DRAWN: MG/KPB | CHECKED: BPM
DATE: 05-30-08
DWG. NO. S9
SHEET 16 OF 61

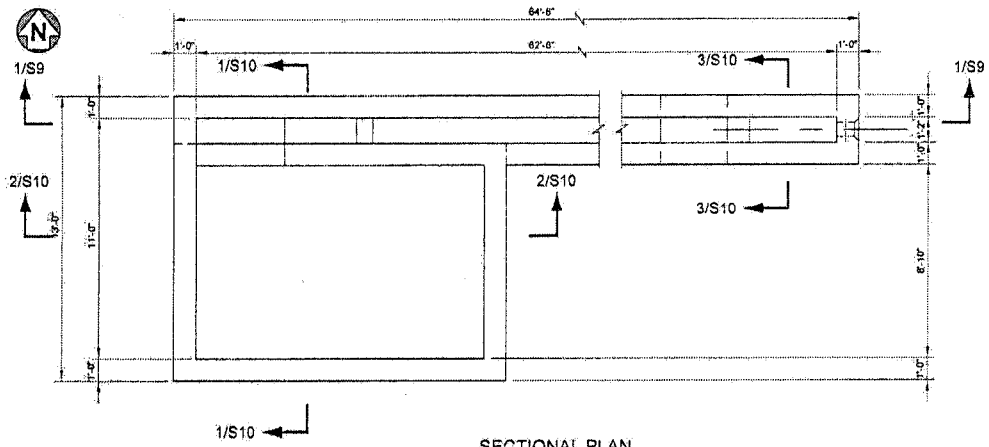

SECTIONAL PLAN
SCALE: 3/16" = 1'-0"

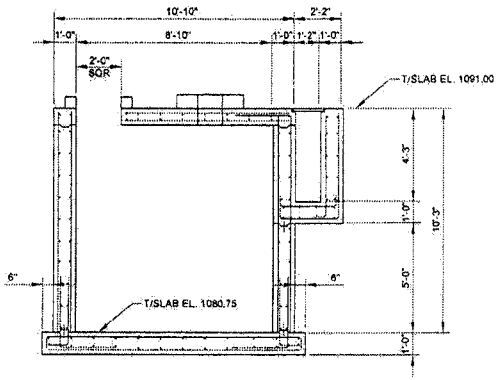

SECTION 1/S10
SCALE: 3/16" = 1'-0"

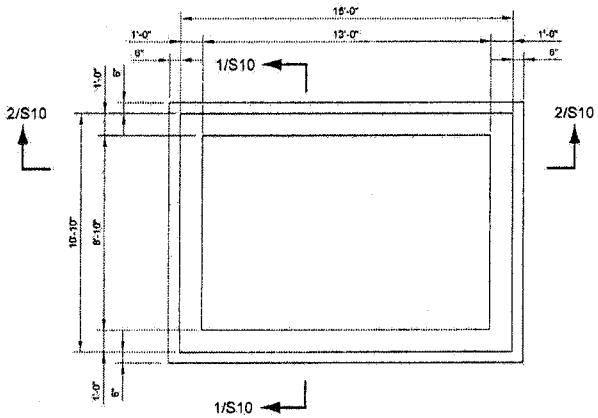

BASE PLAN
SCALE: 3/16" = 1'-0"

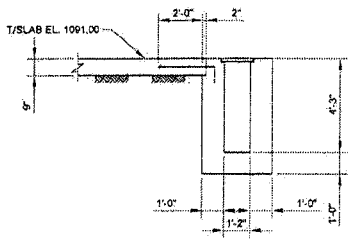

SECTION 3/S10
SCALE: 3/16" = 1'-0"

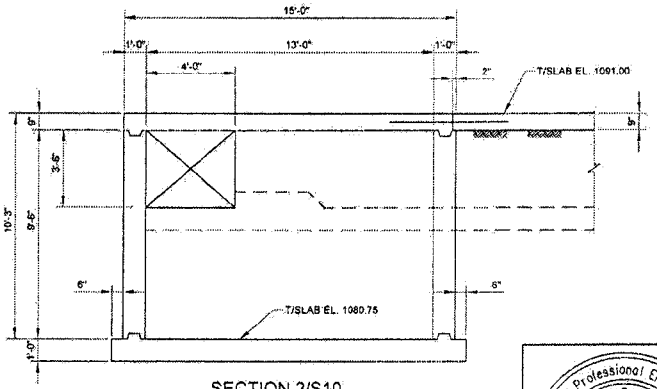

SECTION 2/S10
SCALE: 3/16" = 1'-0"

Registered Professional Engineer (Civil)
CERTIFICATE NO. 33441
BRIAN P. McBRIDE
Date Signed 6-2-08
ARIZONA U.S.A.
Expires 03/31/11

NO.	DATE	BY	REVISION DESCRIPTION

GLOBAL WATER
RELIABLE · RENEWABLE · REUSABLE
21410 N. 19th Ave. · Ste. 201 · Phoenix, AZ 85027
Ph. 623.580.9600 · Fx. 623.580.9669
www.gwresources.com

HASSAYAMPA NORTHEAST CAMPUS 1 WATER RECLAMATION FACILITY

McBride Engineering Solutions, Inc.
6100 West Gila Springs Pl., Suite 7
Chandler, AZ. 85226
Phone: (480) 759-9608

STRUCTURAL REQUIREMENTS ULTRAVIOLET DISINFECTION AND TERTIARY PUMP STATION PLANS AND DETAILS

DESIGNED: MJA/DMK
DRAWN: MG/KPB CHECKED: BPM
DATE: 05-30-08
DWG. NO. S10
SHEET 17 OF 91

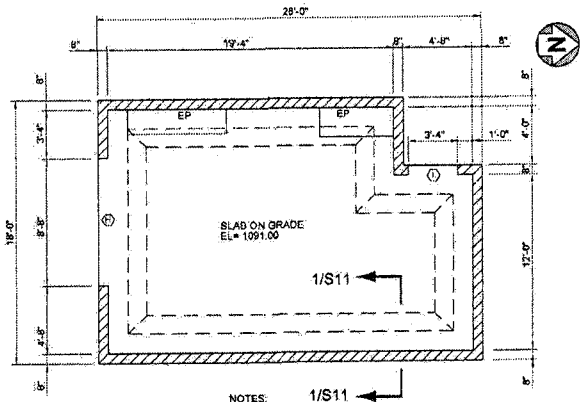

NOTES:
(1) INDICATES CMU WALL OPENING.

MAINTENANCE BUILDING SECTIONAL PLAN

SCALE: 1/8" = 1'-0"

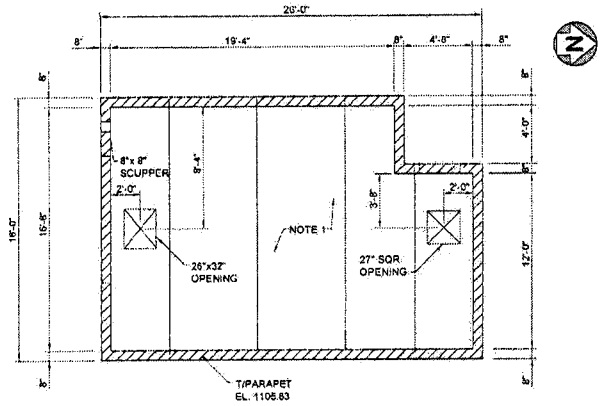

NOTES:

1. 1.5 METAL DECK (20 GA MIN) WITH TAPPERED RIGID INSULATION AND 3 PLY ROOFING.
2. REQUIRED ROOF LIVE LOAD = 20 PSF.

MAINTENANCE BUILDING ROOF PLAN

SCALE: 1/8" = 1'-0"

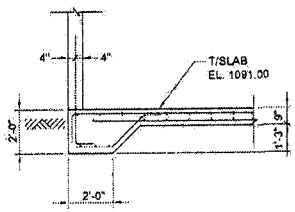

ALTERNATE 1

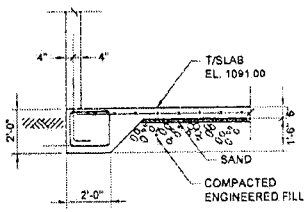

ALTERNATE 2

SECTION 1/S11

SCALE: 3/16" = 1'-0"

Registered Professional Engineer (Civil)
CERTIFICATE NO.
33441
BRIAN P.
McBRIDE
Date Signed 6-2-08
ARIZONA U.S.A.
Expires 03/31/11

NO.	DATE	BY	REVISION DESCRIPTION

GLOBAL WATER
RELIABLE · RENEWABLE · REUSABLE
21410 N. 19th Ave. · Ste. 201 · Phoenix, AZ 85027
Ph: 623.580.0600 · Fx: 623.580.9659
www.gwresources.com

HASSAYAMPA NORTHEAST CAMPUS 1 WATER RECLAMATION FACILITY

McBride Engineering Solutions, Inc.
6100 West Gila Springs Pl., Suite 7
Chandler, AZ. 85226
Phone: (480) 759-9608

STRUCTURAL REQUIREMENTS
MAINTENANCE BUILDING
PLANS AND SECTIONS

DESIGNED: MJ/VDMK
DRAWN: MG/KPB | CHECKED: BPM
DATE: 05-30-08
DWG. NO. S11
SHEET 18 OF 61

VALVE SYMBOLS

DESCRIPTION	SCHEMATIC	THREE LINE	SINGLE LINE
GATE			
NEEDLE			
KNIFE GATE			
BUTTERFLY			
PLUG			
CHECK (SWING)			
CHECK (FOOT VALVE)			
CHECK (BALL VALVE)			
CHECK (DIAPHRAGM)			
CHECK (DUAL DISC)			
CHECK (TILTED DISC)			
CHECK (GLOBE STYLE SILENT)			
BALL			
CONE			
DIAPHRAGM			
GLOBE			
ANGLE			
THREE WAY			
FOUR WAY			
PRESSURE RELIEF			
AUTO AIR AND VACUUM RELEASE	AVR	AVR	AVR
AUTO AIR RELEASE	AR	AR	AR
AUTO VACUUM RELEASE	VR	VR	VR
PRESSURE REDUCING			

VALVE SYMBOLS

DESCRIPTION	SCHEMATIC	THREE LINE	SINGLE LINE
BACK PRESSURE REGULATOR			
HOSE			
STOP AND DRAIN			

PIPE FITTINGS

DESCRIPTION	SCHEMATIC	THREE LINE	SINGLE LINE
CROSS	NA		
CROSS	NA		
TEE	NA		
TEE	NA		
TEE	NA		
SIDE OUTLET TEE	NA		
SIDE OUTLET TEE	NA		
LATERAL	NA		
90° ELBOW	NA		
90° ELBOW	NA		
90° ELBOW	NA		
90° ELBOW (LONG RADIUS)	NA	LR	LR
45° ELBOW	NA		
45° ELBOW	NA		
45° ELBOW	NA		
45° ELBOW (LONG RADIUS)	NA	LR	LR
SIDE OUTLET ELBOW	NA		

PIPE FITTINGS

DESCRIPTION	SCHEMATIC	THREE LINE	SINGLE LINE
SIDE OUTLET ELBOW	NA		
BASE ELBOW	NA		
UNION (SCREWED)			
REDUCER			
REDUCER - ECCENTRIC (OFFSET VIEW)	NA		
BLIND FLANGE			
SLEEVE TYPE COUPLING			
SLEEVE TYPE COUPLING (HARNESSED)	H	H	H
GROOVED TYPE COUPLING	GC	GC	GC
EXPANSION JOINT RUBBER BELLOWS TYPE			
EXPANSION JOINT METAL BELLOWS TYPE			
VENTURI METER			
METER	M	M	M
AIR METER	AM	AM	AM
STRAINER			
LUBE OIL FILTER		NA	
VENT			
THERMOSTAT (TEMPERATURE REGULATOR)			
PRESSURE GAUGE			
THERMOMETER			
WATER LEVEL ALARM	HWL OR LWL	HWL OR LWL	HWL OR LWL
DIFFERENTIAL PRESSURE GAUGE			

PIPE FITTINGS

DESCRIPTION	SCHEMATIC	THREE LINE	SINGLE LINE
FLANGE COUPLING ADAPTER			
PRESSURE SWITCH	PS	PS	PS

PIPE JOINTS

DESCRIPTION	SCHEMATIC	THREE LINE	SINGLE LINE
FLANGE	NA		
MECHANICAL JOINT	NA		
MECHANICAL JOINT (RESTRAINED)	NA	R	R
PUSH ON OR BELL AND SPIGOT	NA		
PUSH ON OR BELL AND SPIGOT (RESTRAINED)	NA	R	R
WELDED	NA		NA
SCREWED	NA		
JOINT IN CONCRETE PIPE	NA		NA
GROOVED	NA		NA
MECHANICAL JOINT	NA		NA

WALL FITTINGS

DESCRIPTION	SCHEMATIC	THREE LINE	SINGLE LINE
WALL SLEEVE (CAULKED)	NA		
WALL SLEEVE (ANNULAR TYPE SEAL)	NA		
WALL SLEEVE (MECHANICAL JOINT)	NA		
FLANGE AND FLANGE WALL PIPE WITH INTERMEDIATE COLLAR (F x F x F)	NA		
BELL AND BELL WALL PIPE WITH INTERMEDIATE COLLAR (B x F x B)	NA		
MECHANICAL JOINT AND MECHANICAL JOINT WALL PIPE WITH INTERMEDIATE COLLAR (MJ x F x MJ)	NA		
BELL AND FLANGE WALL PIPE WITH INTERMEDIATE COLLAR (B x F x F)	NA		
MECHANICAL JOINT AND FLANGE WALL PIPE WITH INTERMEDIATE COLLAR (MJ x F x F)	NA		
STEEL WALL RING FOR MECHANICAL JOINT AND CONCRETE PIPE (RUBBER AND STEEL)	NA		NA

PIPING SERVICE ABBREVIATIONS

BWW	BACKWASH WATER
CEN	CENTRATE
D	DRAIN
DS	DIGESTED SLUDGE
FA	FOUL AIR
FE	FILTER EFFUENT
FI	FILTER INFLUENT
NaOCl	SODIUM HYPOCHLORITE
NaOH	SODIUM HYDROXIDE
NPW	NONPOTABLE WATER
OF	OVERFLOW
PA	PROCESS AIR
PD	PROCESS DRAIN
PI	PLANT INFLUENT
POL	POLYMER
PW	POTABLE WATER
SE	SECONDARY EFFLUENT
SI	SCREENED INFLUENT
SP	SUPERNATANT
SPD	SUMP DISCHARGE
SPW	SOFTENED POTABLE WATER
STR	STORAGE TANK RECYCLE
TE	TERTIARY EFFLUENT
WAS	WASTE ACTIVATED SLUDGE
WWW	WASTE WASH WATER

VALVE OPERATORS

- PLACE KEY FOR OPERATOR IN PLACE OF

NONE MANUAL
C CHAINWHEEL
D DIAPHRAGM
F FLOAT
G GEAR
H HYDRAULIC CYLINDER
M MOTOR (ELECTRIC)
P PNEUMATIC CYLINDER
S SOLENOID
A AIR MOTOR
N NUT

NOTES:

1. THIS IS A GENERAL LEGEND PROVIDED TO FACILITATE USE OF THE DRAWINGS. REFER TO THE DRAWINGS FOR ITEMS REQUIRED.
2. VALVES AND PIPE FITTINGS ARE SHOWN WITH FLANGED JOINTS. ITEMS ARE AVAILABLE WITH VARIOUS JOINTS AND ARE SHOWN AS REQUIRED.
3. NA MEANS NOT APPLICABLE.

Registered Professional Engineer (Civil)
CERTIFICATE NO. 33441
BRIAN P. McBRIDE
Date Signed 6-2-08
ARIZONA U.S.A.
Expires 03/31/11

NO.	DATE	BY	REVISION DESCRIPTION

GLOBAL WATER
RELIABLE · RENEWABLE · REUSABLE
21410 N. 19th Ave. · Ste. 201 · Phoenix, AZ 85027
Ph: 623.580.9600 · Fx: 623.580.9659
www.gwrdsaurora.com

HASSAYAMPA NORTHEAST CAMPUS 1 WATER RECLAMATION FACILITY

McBride Engineering Solutions, Inc.
6100 West Gila Springs Pl., Suite 7
Chandler, AZ. 85226
Phone: (480) 759-9608

MECHANICAL LEGEND

DESIGNED: MJA/DMK
DRAWN: MGKPB | CHECKED: BPM
DATE: 05-30-08
DWG. NO. M1
SHEET 19 OF 61

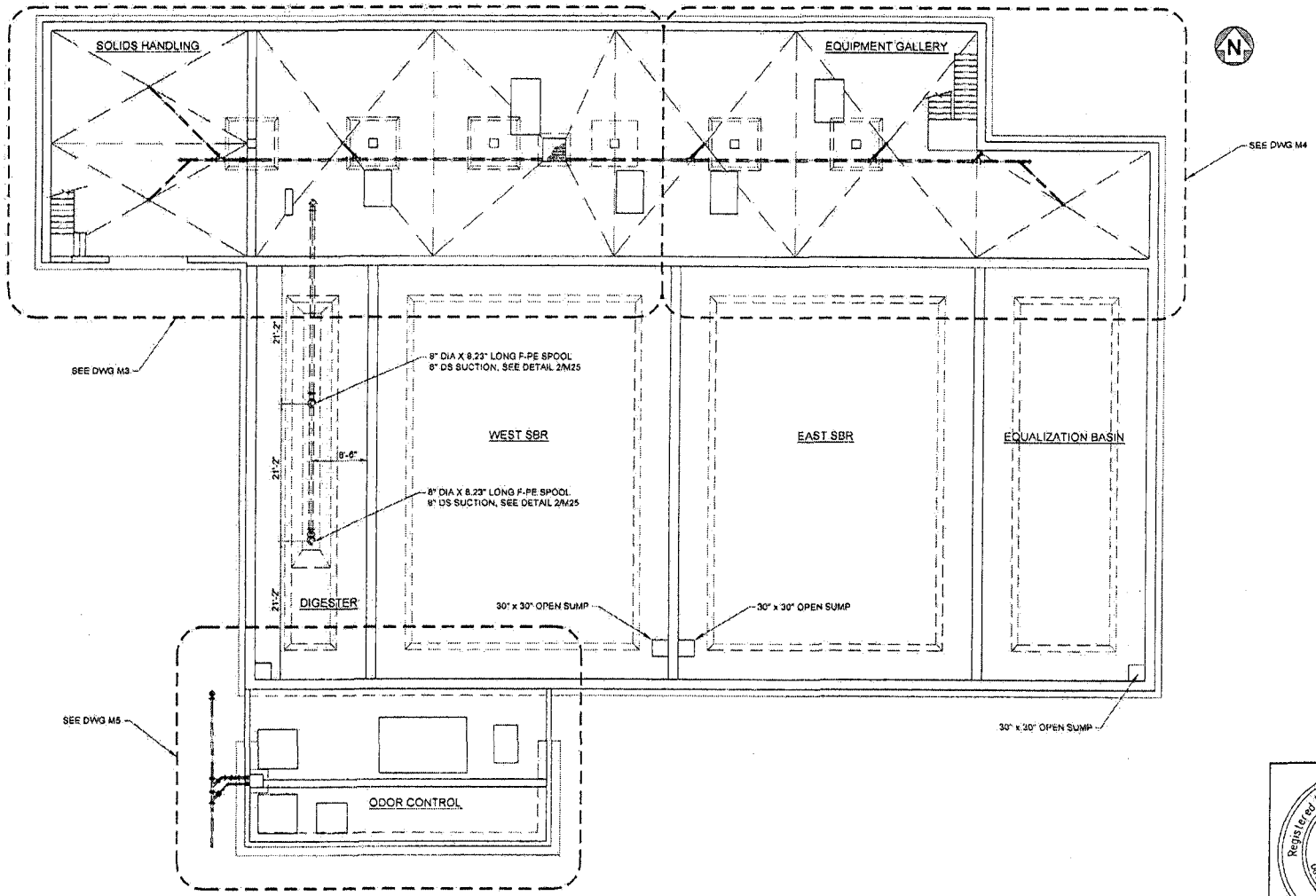

SECTIONAL PLAN

SCALE: 1/16" = 1'-0"

Registered Professional Engineer (Civil)
CERTIFICATE NO. 33441
BRIAN P. McBRIDE
Date Signed 6-2-08
ARIZONA, U.S.A.
Expires 03/31/11

NO.	DATE	BY	REVISION DESCRIPTION

GLOBAL WATER
RELIABLE · RENEWABLE · REUSABLE
21410 N. 19th Ave. · Ste. 201 · Phoenix, AZ 85027
PH: 623.580.9600 · FX: 623.580.9699
www.gwresources.com

HASSAYAMPA NORTHEAST CAMPUS 1 WATER RECLAMATION FACILITY

McBride Engineering Solutions, Inc.
6100 West Gila Springs Pl., Suite 7
Chandler, AZ. 85226
Phone: (480) 759-9608

MAIN PROCESS STRUCTURE SECTIONAL PLAN

DESIGNED: MJA/DMK
DRAWN: MQ/KPB CHECKED: BPM
DATE: 05-30-08
DWG. NO. M2
SHEET 20 OF 61

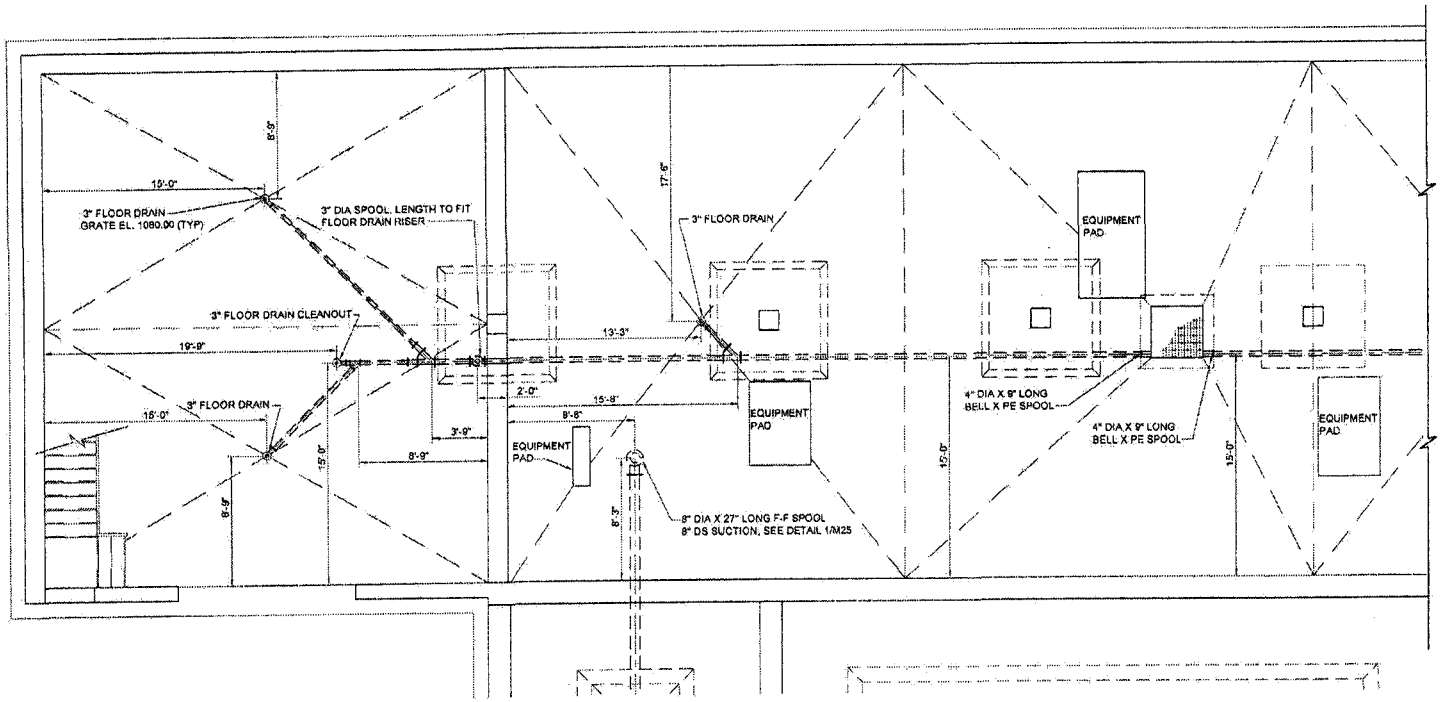

SECTIONAL PLAN
SCALE: 1/0" = 1'-0"

Registered Professional Engineer (Civil)
CERTIFICATE NO.
33441
BRIAN P.
McBRIDE
Date Signed 6-2-08
ARIZONA U.S.A.
Expires 03/31/11

NO.	DATE	BY	REVISION DESCRIPTION

GLOBAL WATER
RELIABLE · RENEWABLE · REUSABLE
21410 N. 19th Ave., Ste. 201 · Phoenix, AZ 85027
Ph: 623.580.9000 · Fx: 623.580.8009
www.gwresources.com

HASSAYAMPA NORTHEAST
CAMPUS 1 WATER
RECLAMATION FACILITY

McBride Engineering Solutions, Inc.
6100 West Gila Springs Pl., Suite 7
Chandler, AZ. 85226
Phone: (480) 759-9608

MAIN PROCESS STRUCTURE
SECTIONAL PLAN

DESIGNED: MJA/DMK
DRAWN: MG/KPB | CHECKED: BPM
DATE: 05-30-08
DWG. NO. M3
SHEET 21 OF 61

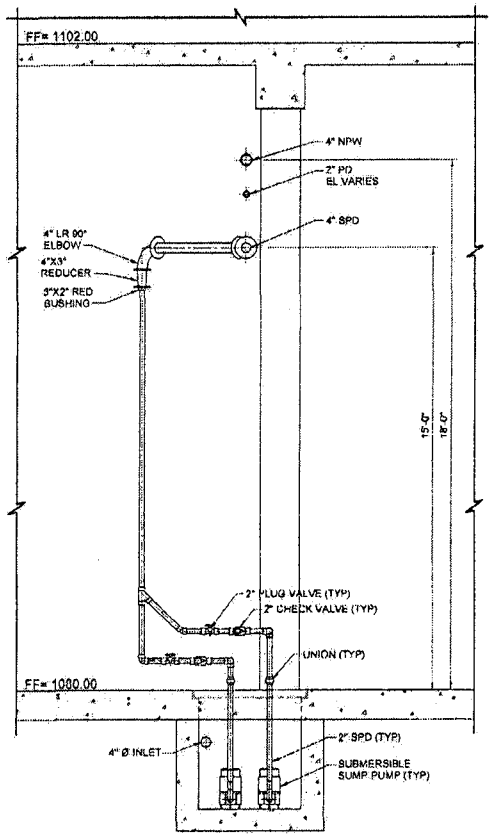

SECTION 1/M4
SCALE: 1/4" = 1'-0"

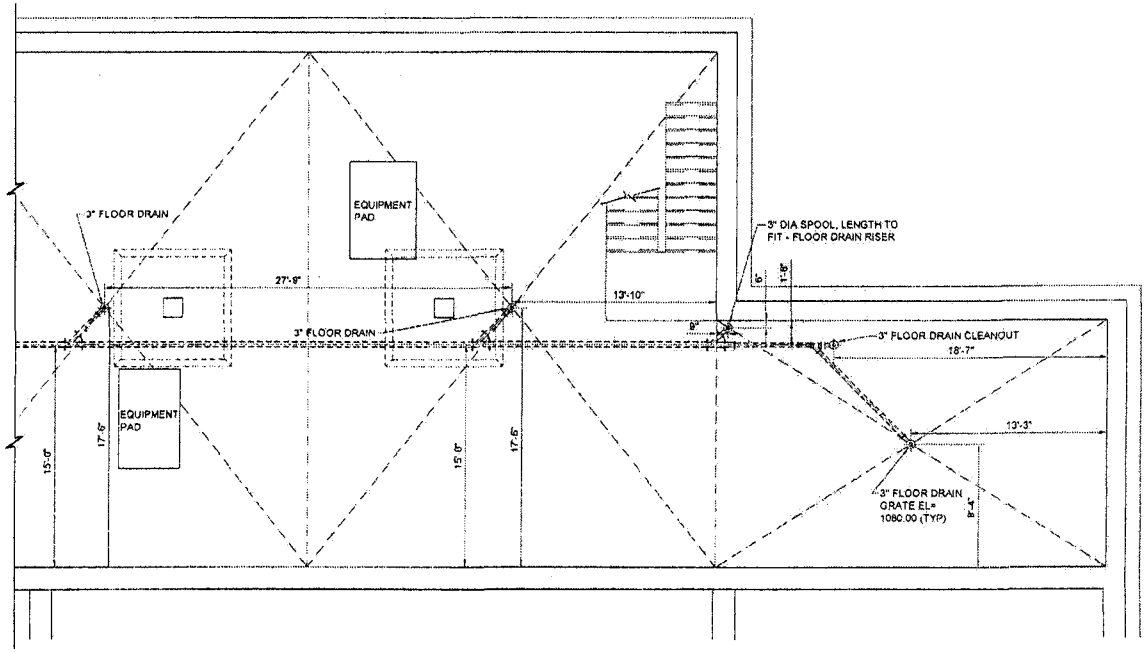

SECTIONAL PLAN
SCALE: 1/8" = 1'-0"

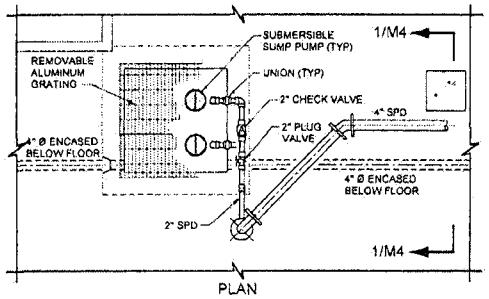

DETAIL 1/M4 - FLOOR DRAIN SUMP
SCALE: 1/4" = 1'-0"

Registered Professional Engineer (Civil)
CERTIFICATE NO. 33441
BRIAN P. McBRIDE
Date Signed 6-2-08
ARIZONA U.S.A.
Expires 03/31/11

NO.	DATE	BY	REVISION DESCRIPTION

GLOBAL WATER
RELIABLE · RENEWABLE · REUSABLE
21410 N. 19th Ave. · Ste. 201 · Phoenix, AZ 85027
Ph: 623.580.9600 · Fx: 623.580.9669
www.gwresources.com

HASSAYAMPA NORTHEAST CAMPUS 1 WATER RECLAMATION FACILITY

McBride Engineering Solutions, Inc.
6100 West Gila Springs Pl., Suite 7
Chandler, AZ. 85226
Phone: (480) 759-9608

MAIN PROCESS STRUCTURE SECTIONAL PLAN, SECTION AND DETAIL

DESIGNED: MJA/DMK
DRAWN: MG/KPB CHECKED: BPM
DATE: 05-30-08
DWG. NO. M4
SHEET 22 OF 61

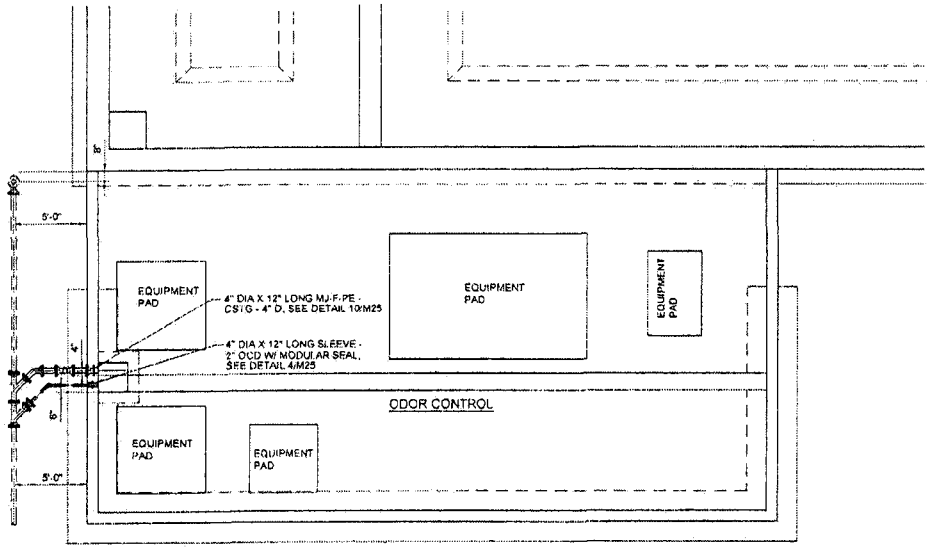

SECTIONAL PLAN

SCALE: 1/8" = 1'-0"

Registered Professional Engineer (Civil)
CERTIFICATE NO. 33441
BRIAN P. McBRIDE
Date Signed 6-2-09
ARIZONA U.S.A.
Expires 03/31/11

NO.	DATE	BY	REVISION DESCRIPTION

GLOBAL WATER
RELIABLE · RENEWABLE · REUSABLE
21410 N. 19th Ave. · Ste. 201 · Phoenix, AZ 85027
Ph: 623.580.9000 · Fx: 623.580.9669
www.globalwater.com

HASSAYAMPA NORTHEAST CAMPUS 1 WATER RECLAMATION FACILITY

McBride Engineering Solutions, Inc.
6100 West Gila Springs Pl., Suite 7
Chandler, AZ. 85226
Phone: (480) 759-9608

MAIN PROCESS STRUCTURE SECTIONAL PLAN

DESIGNED: MJA/DMK
DRAWN: MG/KPB CHECKED: BPM
DATE: 05-30-09
DWG. NO. M5
SHEET 23 OF 61

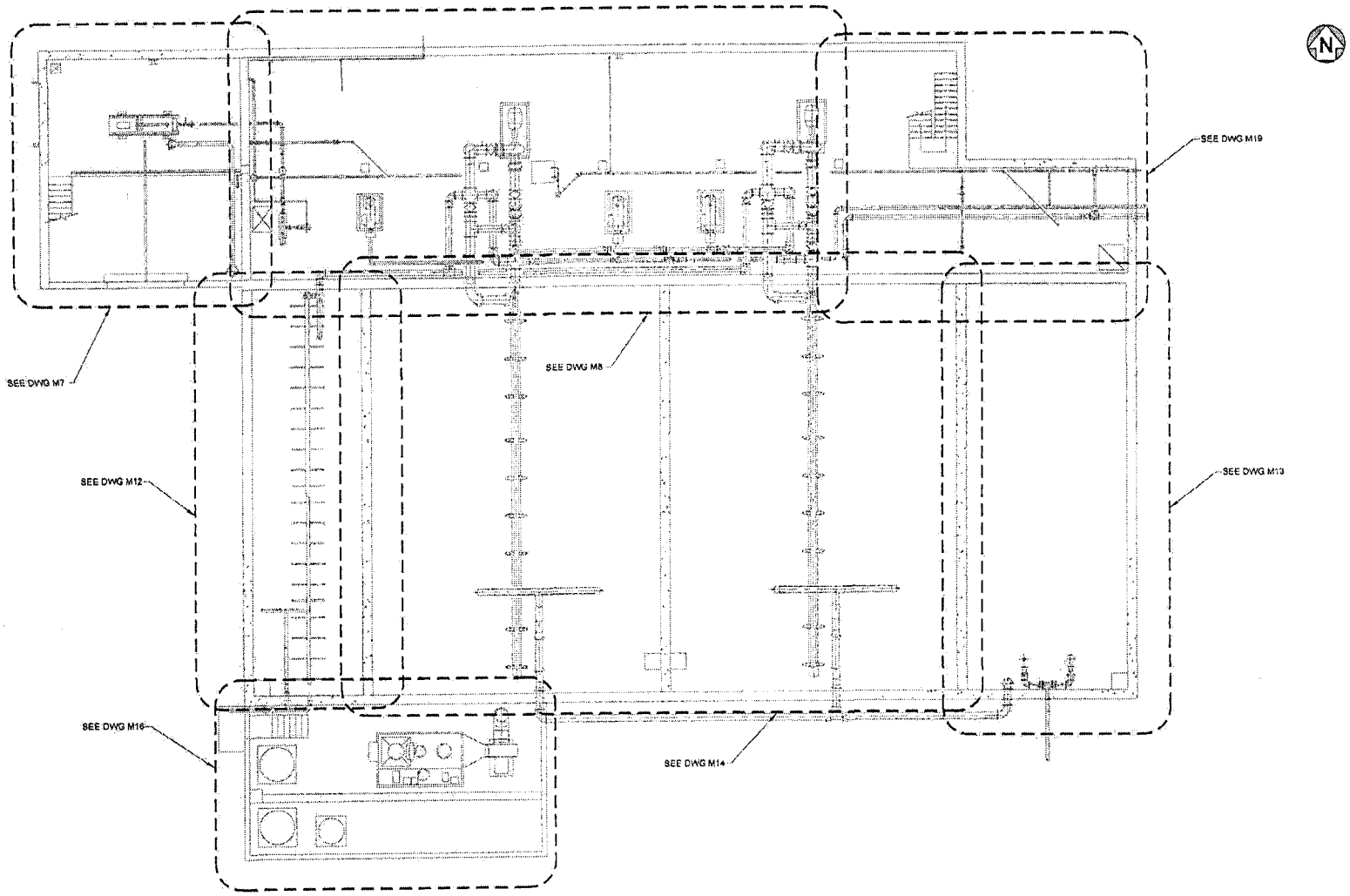

SECTIONAL PLAN
SCALE 1/16" = 1'-0"

Registered Professional Engineer (Civil)
CERTIFICATE NO.
33441
BRIAN P.
McBRIDE
Date Signed 6-2-08
ARIZONA
Expires 03/31/11

NO.	DATE	BY	REVISION DESCRIPTION

GLOBAL WATER
REUABLE · RENEWABLE · REUSABLE
21410 N. 19th Ave. · Ste. 201 · Phoenix, AZ 85027
Ph: 623.580.9600 · Fx: 623.580.9659
www.gwresources.com

HASSAYAMPA NORTHEAST
CAMPUS 1 WATER
RECLAMATION FACILITY

McBride Engineering Solutions, Inc.
6100 West Gila Springs Pl., Suite 7
Chandler, AZ. 85226
Phone: (480) 759-9608

MAIN PROCESS STRUCTURE
SECTIONAL PLAN

DESIGNED: MJA/DMK
DRAWN: MG/KPB | CHECKED: BPM
DATE: 05-30-08
DWG. NO. M6
SHEET 24 OF 61

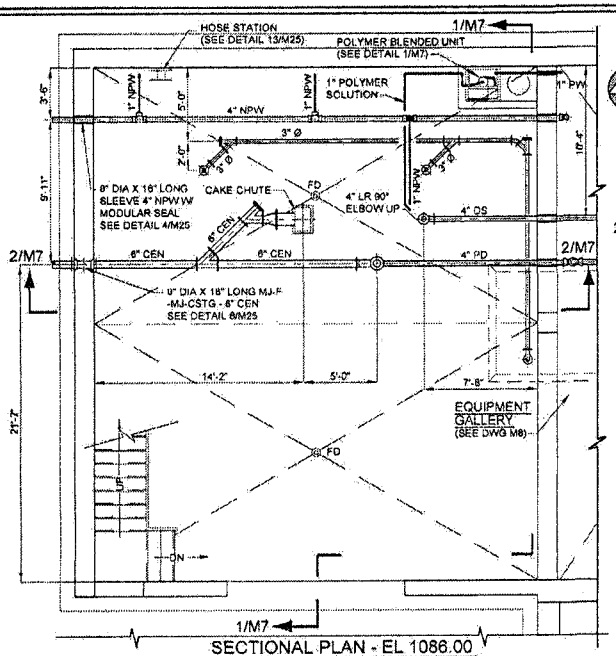

SECTIONAL PLAN - EL 1086.00

SCALE: 1/8" = 1'-0"

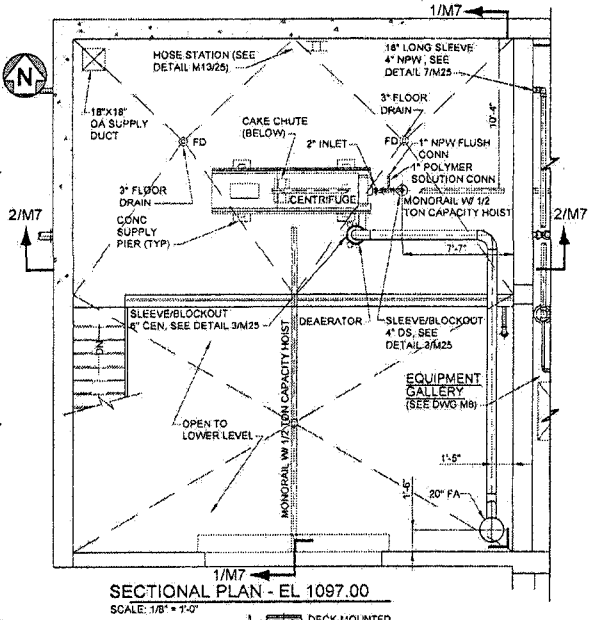

SECTIONAL PLAN - EL 1097.00

SCALE: 1/8" = 1'-0"

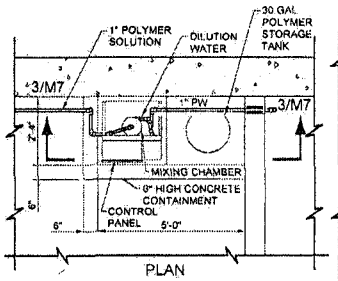

DETAIL 1/M7 - POLYMER BLENDING UNIT

SCALE: 1/4" = 1'-0"

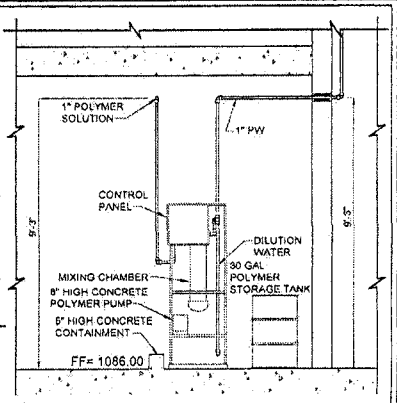

SECTION- 3/M7

SCALE: 1/4" = 1'-0"

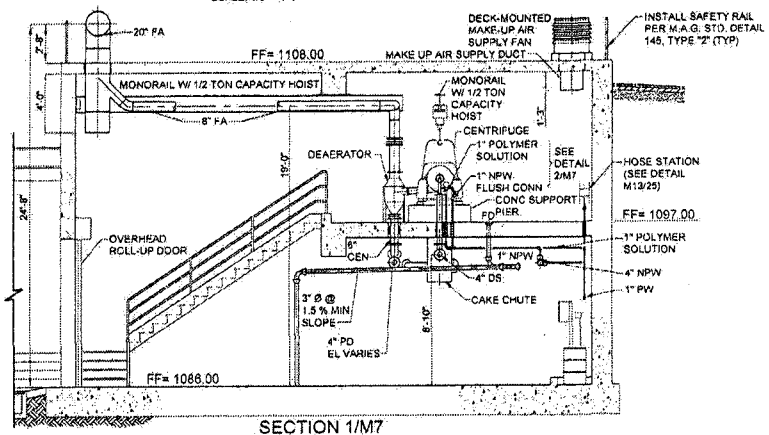

SECTION 1/M7

SCALE: 1/8" = 1'-0"

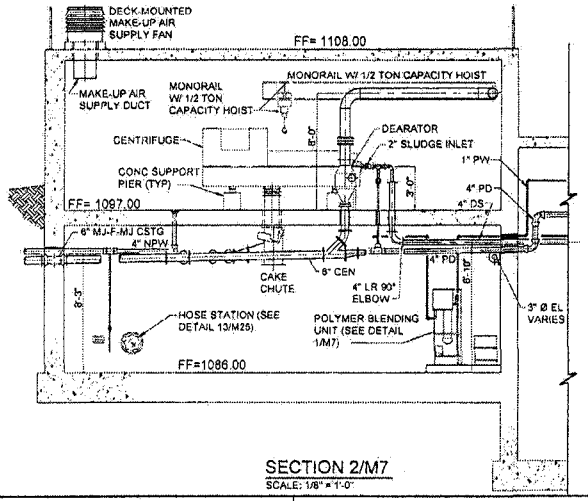

SECTION 2/M7

SCALE: 1/8" = 1'-0"

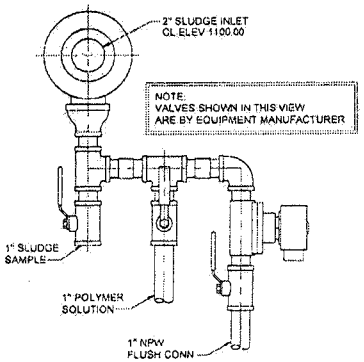

ELEVATION LOOKING WEST

DETAIL 2/M7 - CENTRIFUGE INLET CONNECTIONS

SCALE: 1-1/2" = 1'-0"

Registered Professional Engineer (Civil) CERTIFICATE NO. 33441 BRIAN P. McBRIDE Date Signed 6-2-08 ARIZONA U.S.A.

Expires 03/31/11

NO.	DATE	BY	REVISION DESCRIPTION

GLOBAL WATER
RELIABLE · RENEWABLE · REUSABLE
21410 N. 19th Ave. · Ste. 201 · Phoenix, AZ 85027
Ph: 623.580.9600 · Fx: 623.580.9059
www.globalwaterusa.com

HASSAYAMPA NORTHEAST CAMPUS 1 WATER RECLAMATION FACILITY

McBride Engineering Solutions, Inc.
6100 West Gila Springs Pl., Suite 7
Chandler, AZ. 85226
Phone: (480) 759-9608

MAIN PROCESS STRUCTURE SECTIONAL PLAN

DESIGNED: MJA/DMK
DRAWN: MG/KPB | CHECKED: BPM
DATE: 05-30-08
DWG. NO. M7
SHEET 25 OF 61

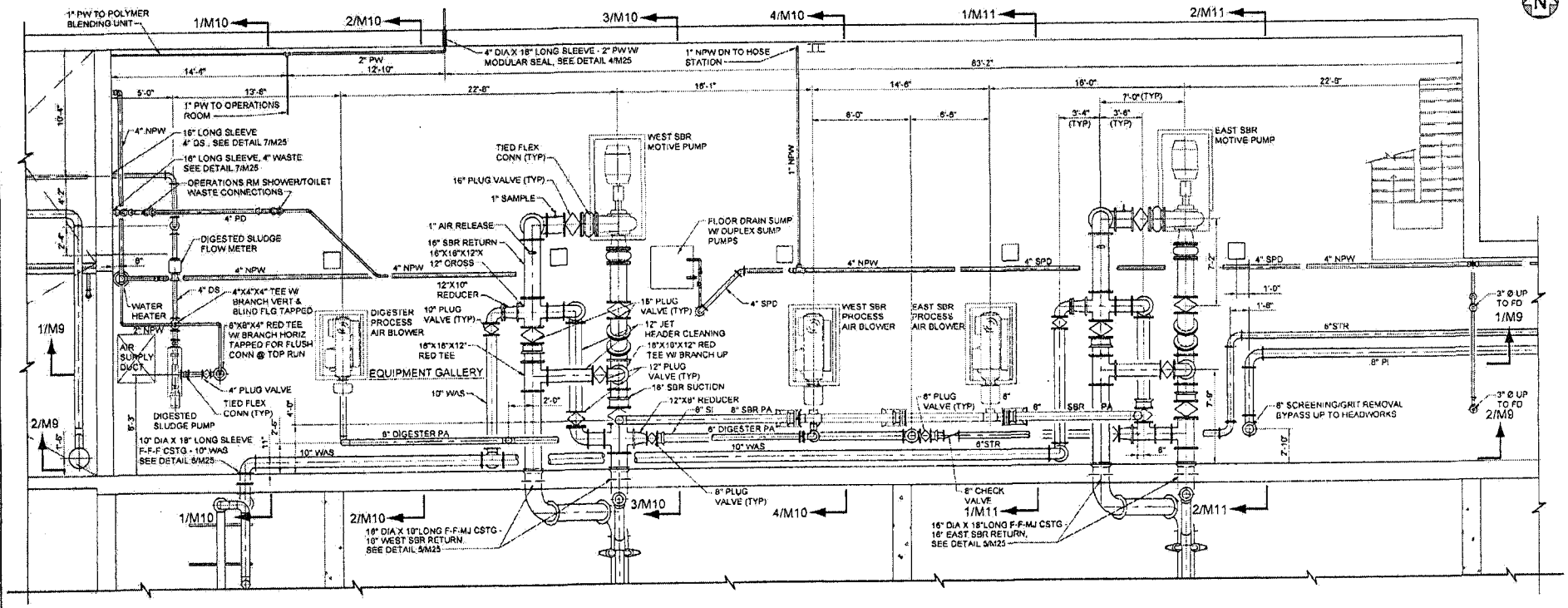

SECTIONAL PLAN

SCALE: 1/8" = 1'-0"

Registered Professional Engineer (Civil)
CERTIFICATE NO. 33441
BRIAN P. McBRIDE
Date Signed 6-2-08
ARIZONA U.S.A.
Expires 03/31/11

NO.	DATE	BY	REVISION DESCRIPTION

GLOBAL WATER
RELIABLE · RENEWABLE · REUSABLE
21410 N. 19th Ave. · Ste. 201 · Phoenix, AZ 85027
Ph: 623.580.9600 · Fx: 623.580.9659
www.gwresources.com

HASSAYAMPA NORTHEAST CAMPUS 1 WATER RECLAMATION FACILITY

McBride Engineering Solutions, Inc.
6100 West Gila Springs Pl., Suite 7
Chandler, AZ. 85226
Phone: (480) 759-9608

MAIN PROCESS STRUCTURE SECTIONAL PLAN

DESIGNED: MJA/DMK
DRAWN: MG/KPB CHECKED: BPM
DATE: 05-30-08
DWG. NO. M8
SHEET 26 OF 61

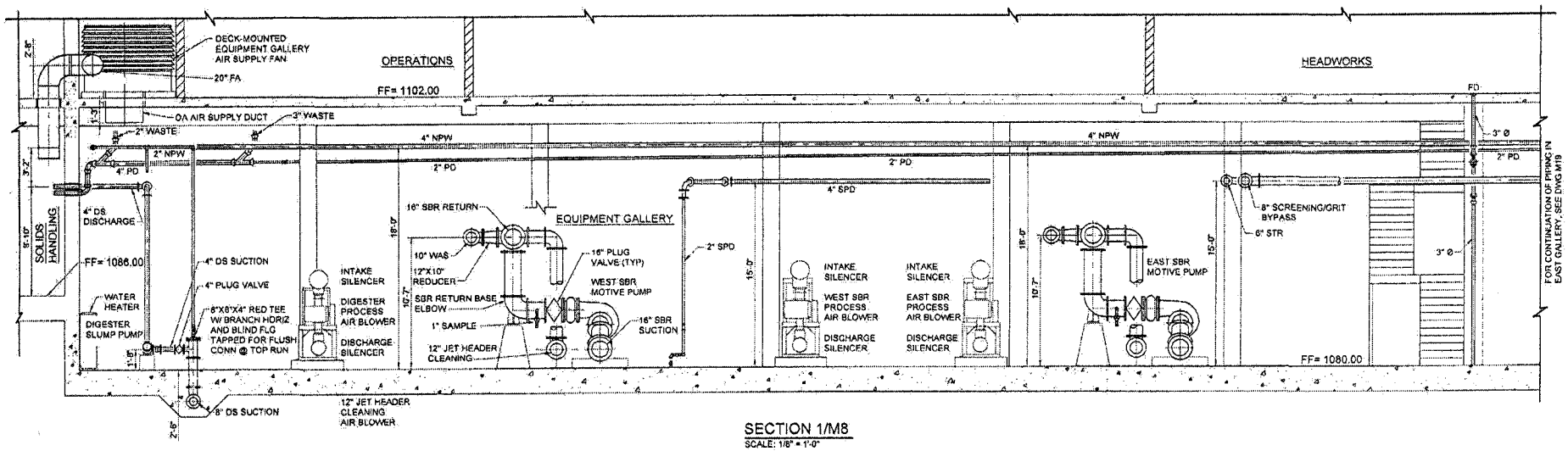

SECTION 1/M8

SCALE: 1/8" = 1'-0"

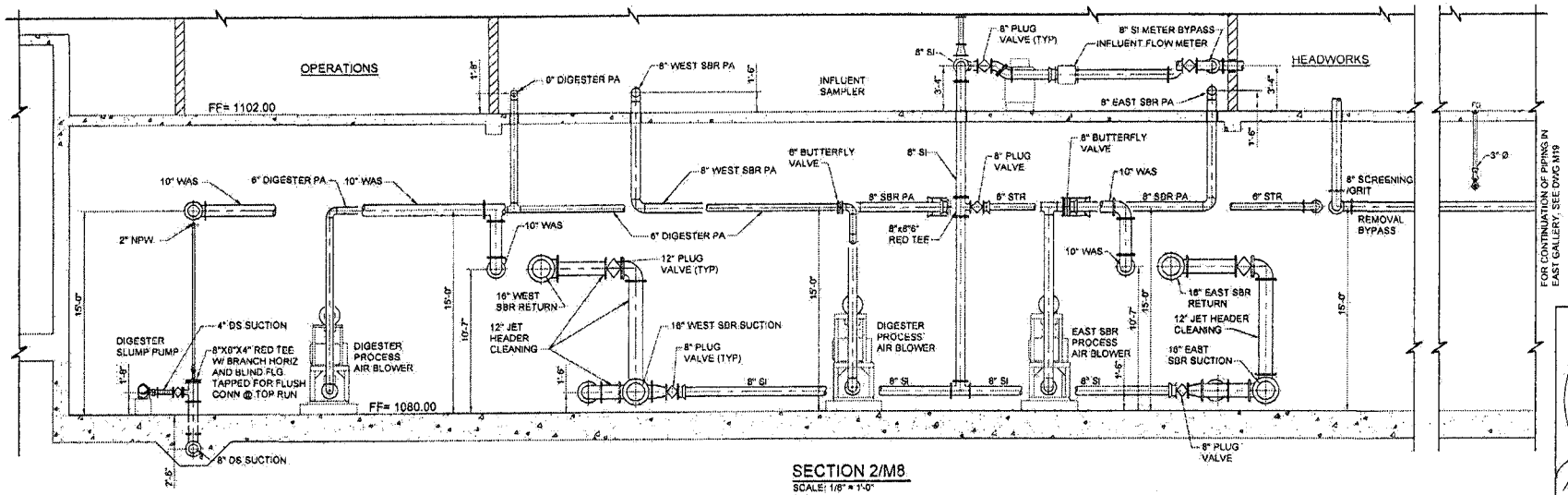

SECTION 2/M8

SCALE: 1/8" = 1'-0"

Registered Professional Engineer (Civil) CERTIFICATE NO. 33441 BRIAN P. McBRIDE Date Signed 6-2-08 ARIZONA

Expires 03/31/11

NO.	DATE	BY	REVISION DESCRIPTION

GLOBAL WATER
RELIABLE · RENEWABLE · REUSABLE
21410 N. 19th Ave. · Ste. 201 · Phoenix, AZ 85027
Ph: 623.580.9600 · Fx: 623.580.9658
www.gwrsources.com

HASSAYAMPA NORTHEAST CAMPUS 1 WATER RECLAMATION FACILITY

McBride Engineering Solutions, Inc.
6100 West Gila Springs Pl., Suite 7
Chandler, AZ. 85226
Phone: (480) 759-9608

EQUIPMENT GALLERY SECTIONS

DESIGNED: MJA/DMK
DRAWN: MG/KPB CHECKED: BPM
DATE: 05-30-08
DWG. NO. M9
SHEET 27 OF 61

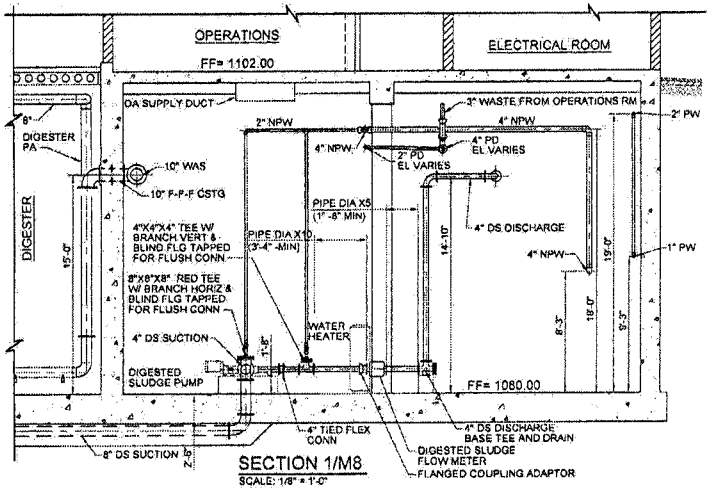

SECTION 1/M8
SCALE: 1/8" = 1'-0"

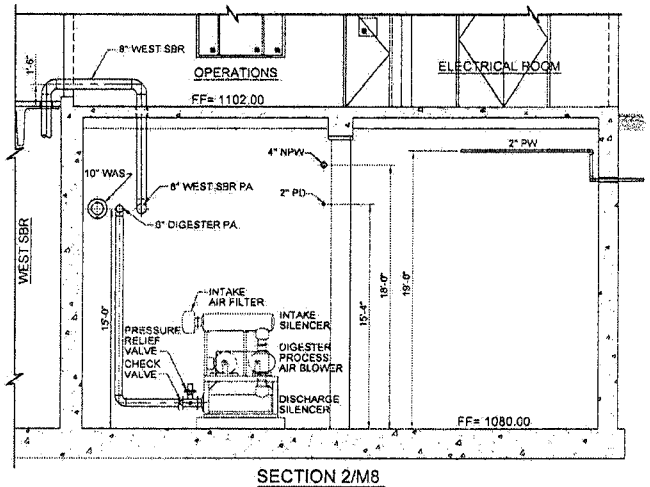

SECTION 2/M8
SCALE: 1/8" = 1'-0"

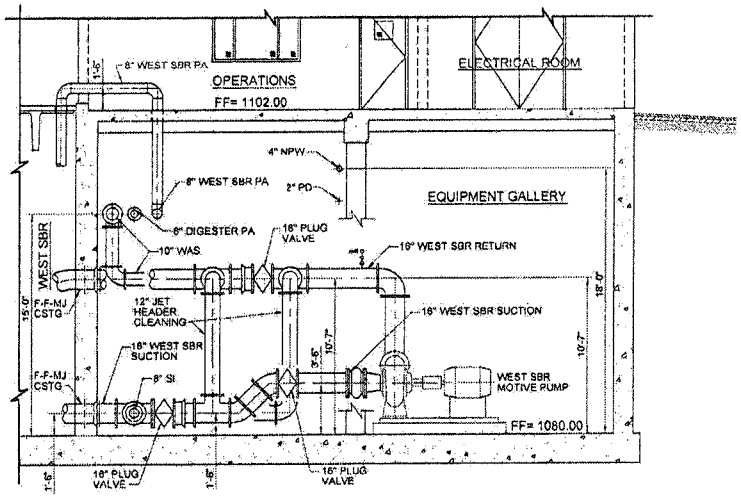

SECTION 3/M8
SCALE: 1/8" = 1'-0"

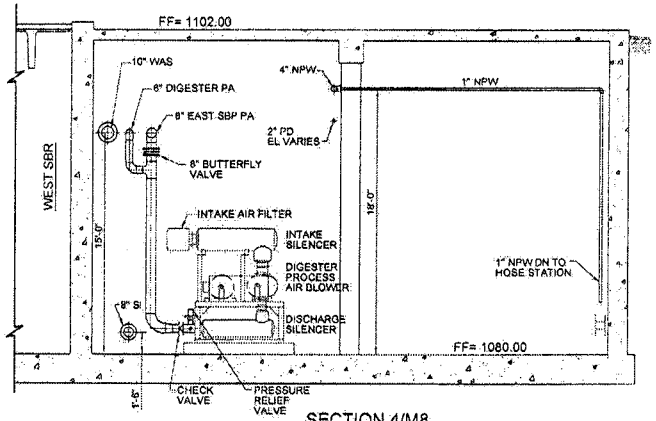

SECTION 4/M8
SCALE: 1/8" = 1'-0"

Registered Professional Engineer (Civil)
CERTIFICATE NO. 33441
BRIAN P. McBRIDE
Date Signed 6-2-08
ARIZONA U.S.A.
Expires 03/31/11

NO.	DATE	BY	REVISION DESCRIPTION

GLOBAL WATER
RELIABLE · RENEWABLE · REUSABLE
21410 N. 19th Ave. · Ste. 201 · Phoenix, AZ 85027
Ph: 623.580.9600 · Fx: 623.580.9659
www.gwresources.com

HASSAYAMPA NORTHEAST CAMPUS 1 WATER RECLAMATION FACILITY

McBride Engineering Solutions, Inc.
6100 West Gila Springs Pl., Suite 7
Chandler, AZ. 85226
Phone: (480) 759-9608

EQUIPMENT GALLERY SECTIONS

DESIGNED: MJA/DMK
DRAWN: MG/KPB CHECKED: BPM
DATE: 05-30-08
DWG. NO. M10
SHEET 28 OF 61

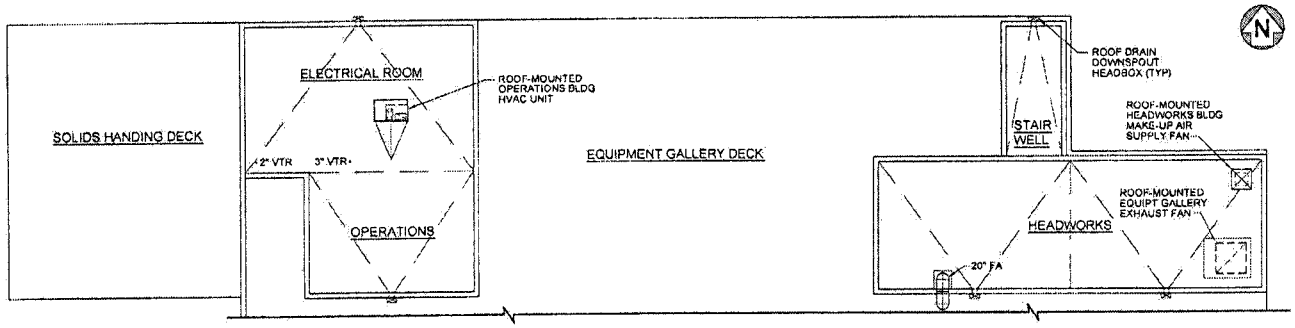

ROOF PLAN - OPERATIONS BUILDING AND HEADWORKS

SCALE: 1/16" = 1'-0"

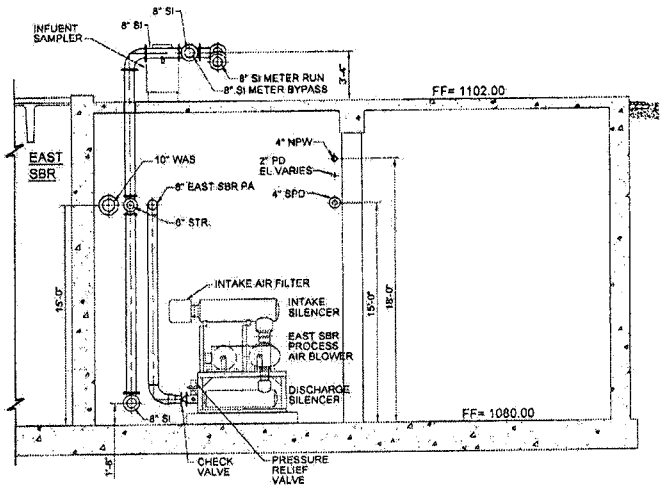

SECTION 1/M8

SCALE: 1/8" = 1'-0"

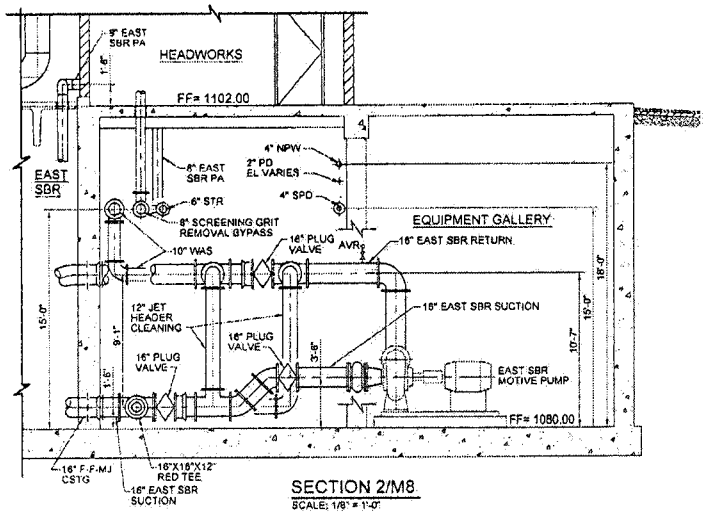

SECTION 2/M8

SCALE: 1/8" = 1'-0"

Registered Professional Engineer (Civil)
CERTIFICATE NO. 33441
BRIAN P. McBRIDE
Date Signed 6-2-09
ARIZONA U.S.A.
Expires 03/31/11

NO.	DATE	BY	REVISION DESCRIPTION

GLOBAL WATER
RELIABLE · RENEWABLE · REUSABLE
21410 N. 19th Ave. · Ste. 201 · Phoenix, AZ 85027
Ph: 623.580.9600 · Fx: 623.580.0680
www.gwresources.com

HASSAYAMPA NORTHEAST CAMPUS 1 WATER RECLAMATION FACILITY

McBride Engineering Solutions, Inc.
6100 West Gila Springs Pl., Suite 7
Chandler, AZ. 85226
Phone: (480) 759-9608

OPERATIONS AND HEADWORKS ROOF PLAN EQUIPMENT GALLERY SECTIONS

DESIGNED: MJA/DMK
DRAWN: MG/KPB | CHECKED: DPM
DATE: 05-30-09
DWG. NO. M11
SHEET 29 OF 61

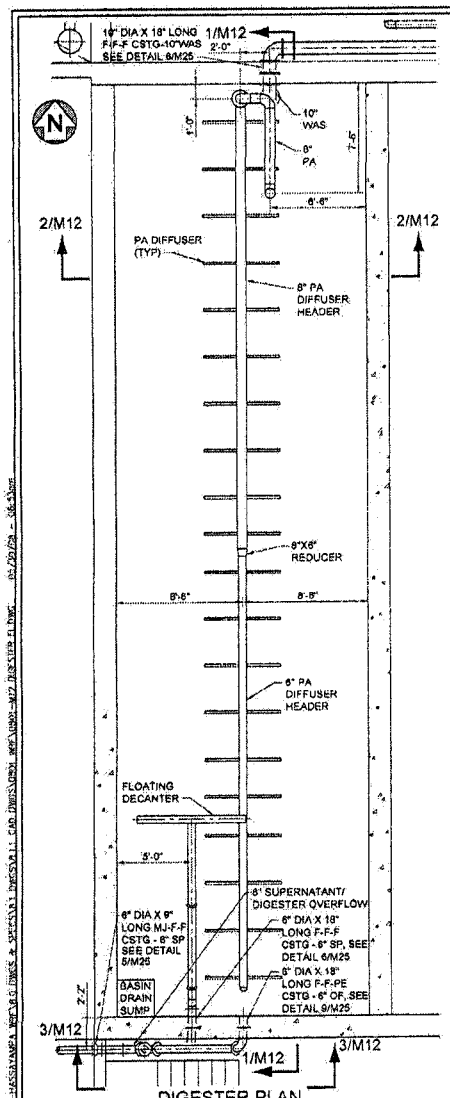

DIGESTER PLAN
SCALE: 1/8" = 1'-0"

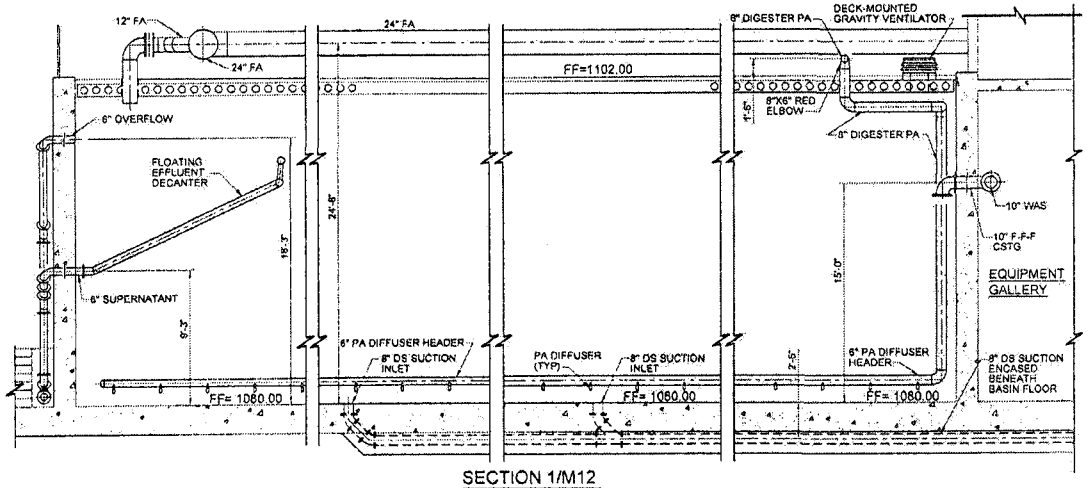

SECTION 1/M12
SCALE: 1/8" = 1'-0"

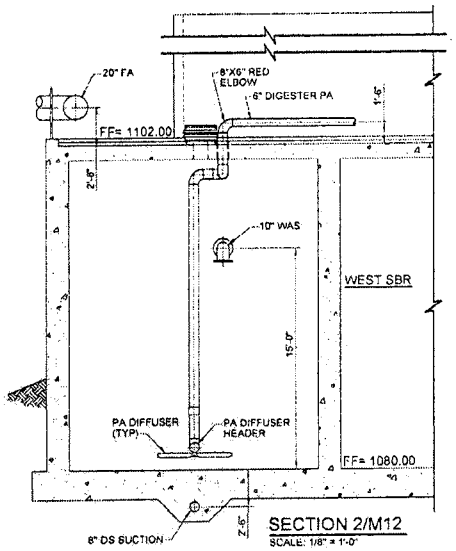

SECTION 2/M12
SCALE: 1/8" = 1'-0"

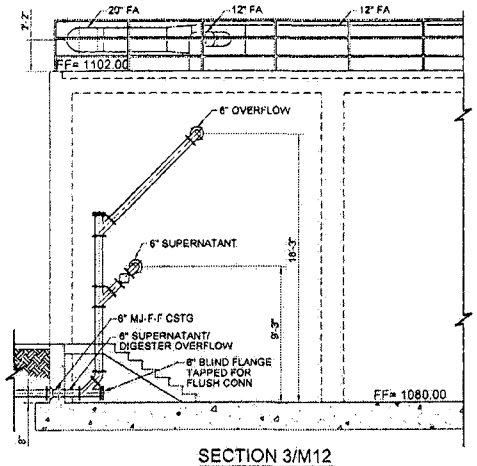

SECTION 3/M12
SCALE: 1/8" = 1'-0"

Registered Professional Engineer (Civil)
CERTIFICATE NO. 33441
BRIAN P. McBRIDE
Date Signed 6-2-08
ARIZONA U.S.A.
Expires 03/31/11

NO	DATE	BY	REVISION DESCRIPTION

GLOBAL WATER
RELIABLE · RENEWABLE · REUSABLE
21410 N. 19th Ave. · Ste. 201 · Phoenix, AZ 85027
Ph: 623.580.9600 · Fx: 623.580.9659
www.globalwaterco.com

HASSAYAMPA NORTHEAST CAMPUS 1 WATER RECLAMATION FACILITY

McBride Engineering Solutions, Inc.
6100 West Gila Springs Pl., Suite 7
Chandler, AZ. 85226
Phone: (480) 759-9608

DIGESTER SECTIONAL PLAN AND SECTIONS

DESIGNED: MJA/DMK
DRAWN: MQ/KPB | CHECKED: BPM
DATE: 05-30-08
DWG. NO. M12
SHEET 30 OF 61

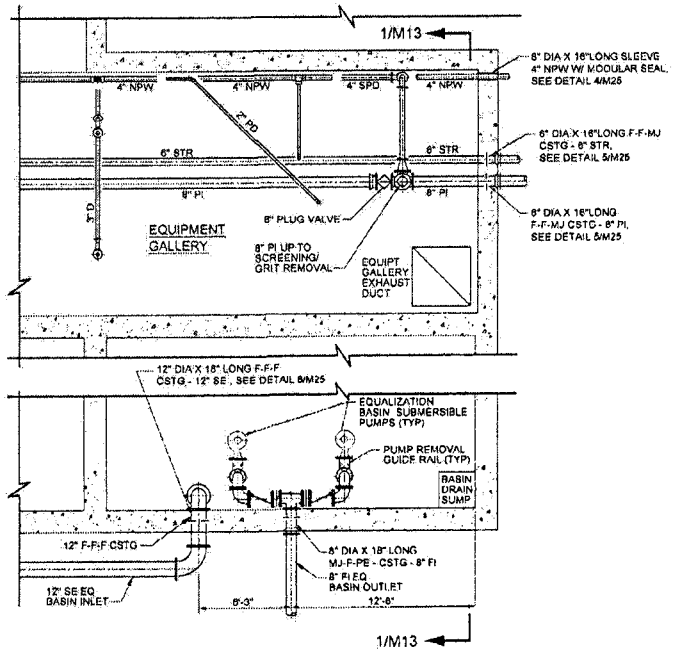

EQUALIZATION BASIN PLAN
SCALE: 1/8" = 1'-0"

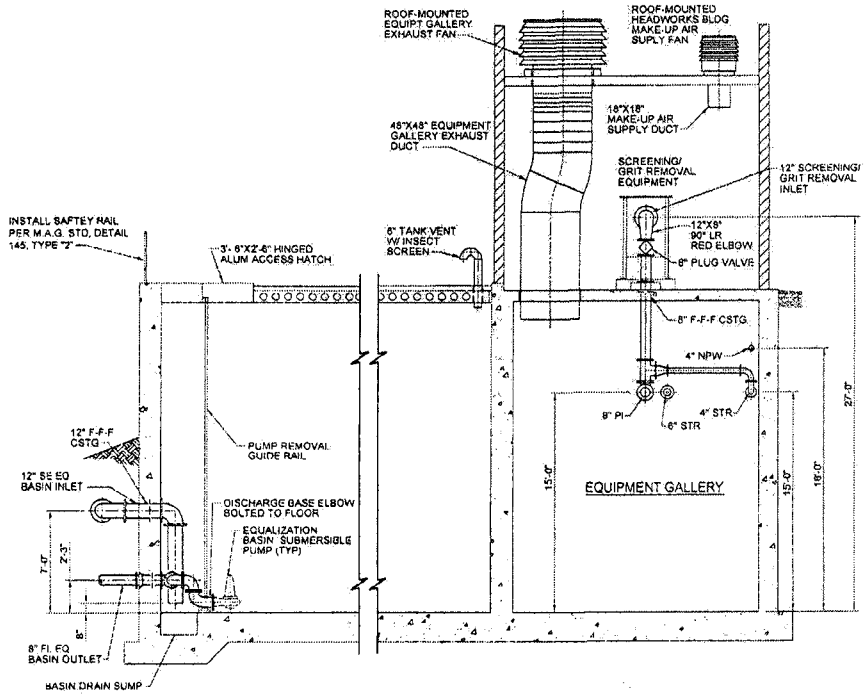

SECTION 1/M13
SCALE: 1/8" = 1'-0"

Registered Professional Engineer (Civil)
CERTIFICATE NO.
33441
BRIAN P.
McBRIDE
Date Signed 6-2-08
ARIZONA, U.S.A.
Expires 03/31/11

NO.	DATE	BY	REVISION DESCRIPTION

GLOBAL WATER
RELIABLE · RENEWABLE · REUSABLE
21410 N. 19th Ave. · Ste. 201 · Phoenix, AZ 85027
Ph: 623.580.9600 · Fx: 623.580.9659
www.gwresources.com

HASSAYAMPA NORTHEAST
CAMPUS 1 WATER
RECLAMATION FACILITY

McBride Engineering Solutions, Inc.
6100 West Gila Springs Pl., Suite 7
Chandler, AZ. 85226
Phone: (480) 759-9608

EQUALIZATION BASIN
SECTIONAL PLAN
AND SECTION

DESIGNED: MJA/DMK
DRAWN: MG/KPB | CHECKED: BPM
DATE: 05-30-08
DWG. NO. M13
SHEET 31 OF 61

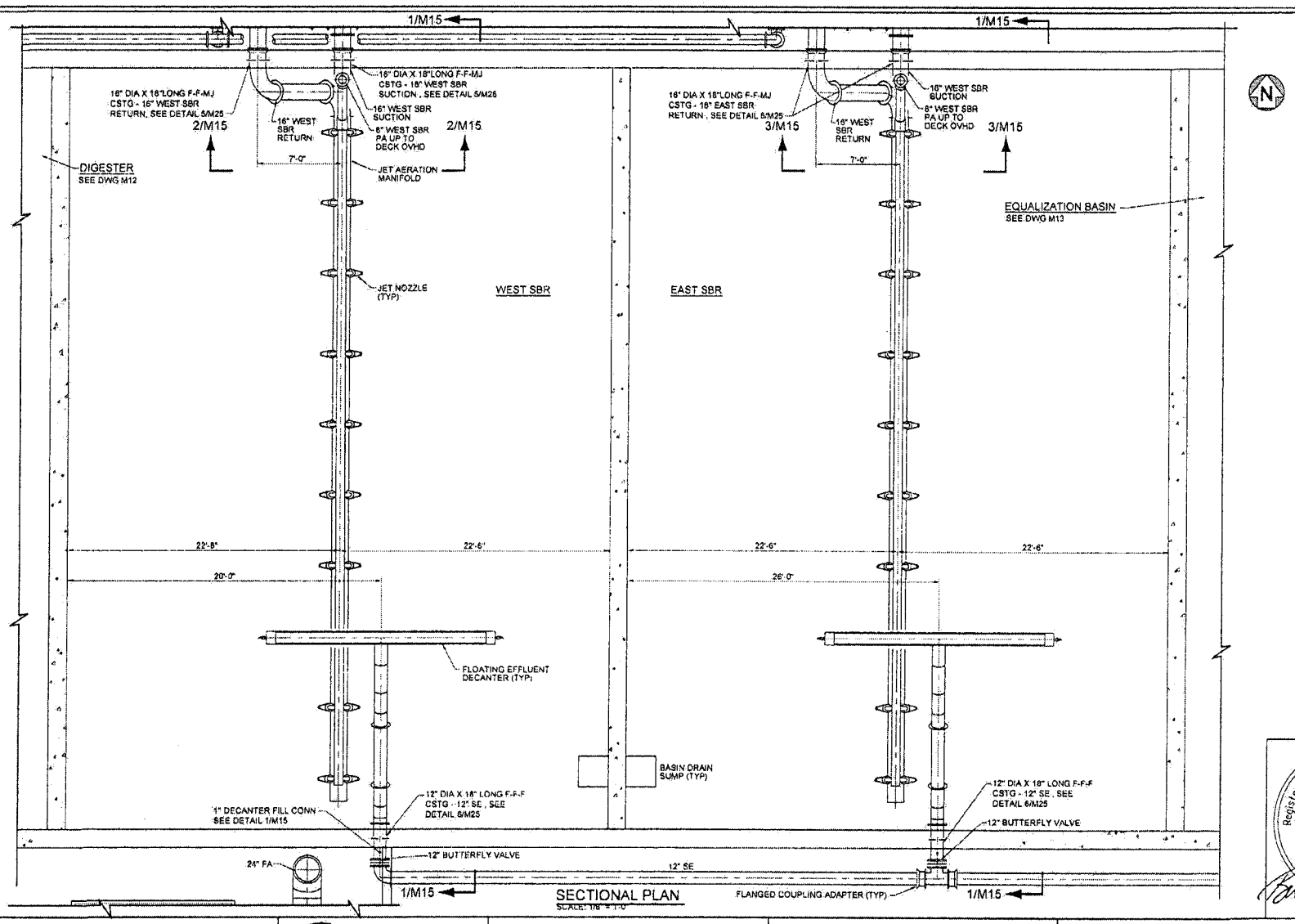

SECTIONAL PLAN
SCALE: 1/8" = 1'-0"

Registered Professional Engineer (Civil)
CERTIFICATE NO. 33441
BRIAN P. McBRIDE
Date Signed 6-2-08
ARIZONA, U.S.A.
Expires 03/31/11

NO.	DATE	BY	REVISION DESCRIPTION

GLOBAL WATER
RELIABLE · RENEWABLE · REUSABLE
21410 N. 19th Ave. · Ste. 201 · Phoenix, AZ 85027
Ph: 623.580.9600 · Fx: 623.580.0695
www.gwresources.com

HASSAYAMPA NORTHEAST
CAMPUS 1 WATER
RECLAMATION FACILITY

McBride Engineering Solutions, Inc.
6100 West Gila Springs Pl., Suite 7
Chandler, AZ. 85226
Phone: (480) 759-9608

SEQUENCING BATCH
REACTORS SECTIONAL PLAN
AND SECTIONS

DESIGNED: MJA/DMK
DRAWN: MG/KPB CHECKED: BPM
DATE: 05-30-08
DWG. NO. M14
SHEET 32 OF 81

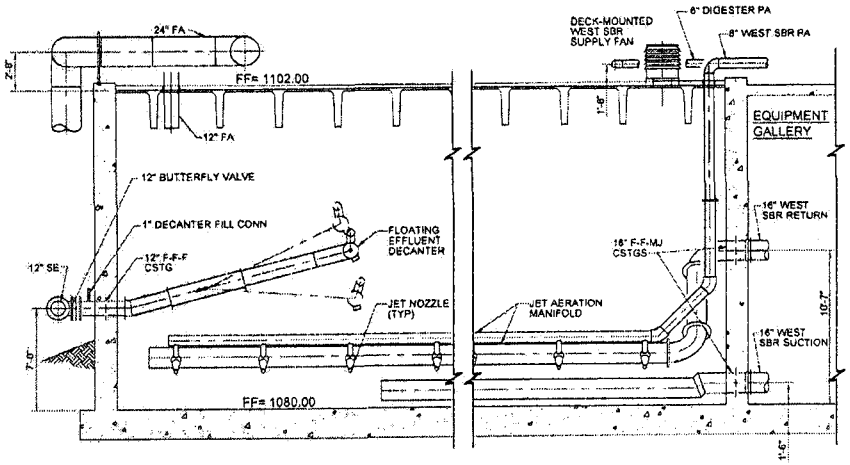

SECTION 1/M14
SCALE: 1/8" = 1'-0"

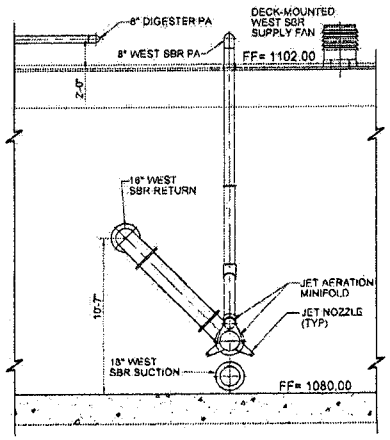

SECTION 2/M14
SCALE: 1/8" = 1'-0"

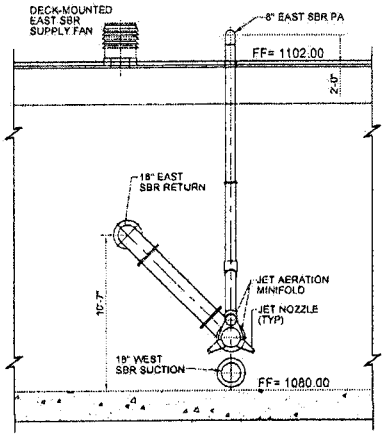

SECTION 3/M14
SCALE: 1/8" = 1'-0"

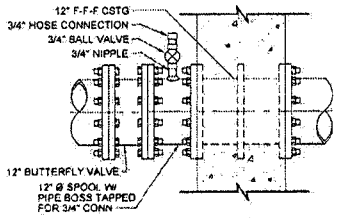

ELEVATION - LOOKING WEST

DETAIL 1/M14 - DECANTER FILL CONNECTION
SCALE: 1/2" = 1'-0"

Registered Professional Engineer (Civil)
CERTIFICATE NO. 33441
BRIAN P. McBRIDE
Date Signed 6-2-08
ARIZONA, U.S.A.
Expires 03/31/11

NO.	DATE	BY	REVISION DESCRIPTION

GLOBAL WATER
RELIABLE · RENEWABLE · REUSABLE
21410 N. 19th Ave · Ste. 201 · Phoenix, AZ 85027
PH: 623.580.9600 · FX: 623.580.9659
www.gwresources.com

HASSAYAMPA NORTHEAST CAMPUS 1 WATER RECLAMATION FACILITY

McBride Engineering Solutions, Inc.
6100 West Gila Springs Pl., Suite 7
Chandler, AZ. 85226
Phone: (480) 759-9608

SEQUENCING BATCH REACTORS SECTIONAL PLAN AND SECTIONS

DESIGNED: MJA/DMK
DRAWN: MG/KPB CHECKED: BPM
DATE: 05-30-08
DWG. NO. M15
SHEET 33 OF 61

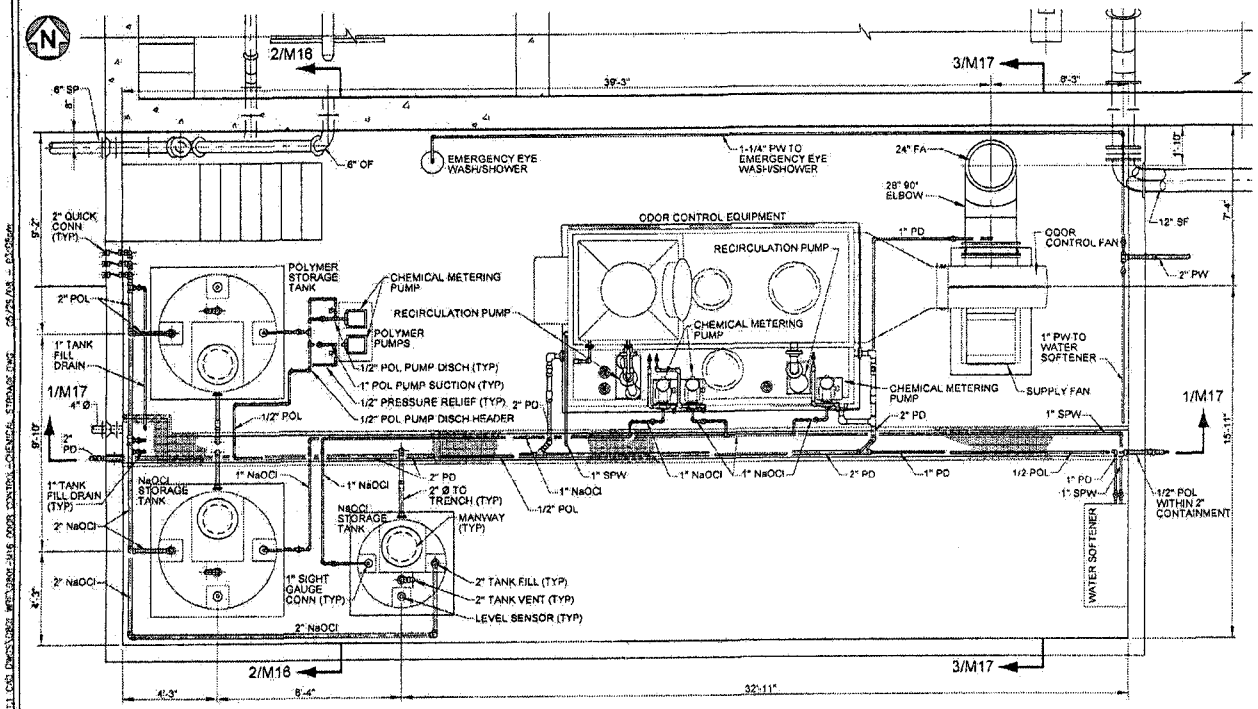

PLAN VIEW
SCALE: 3/16" = 1'-0"

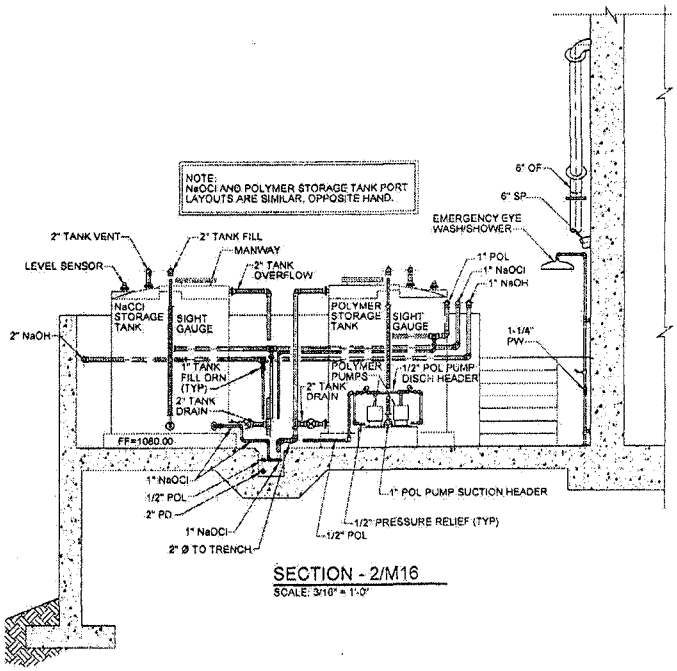

SECTION - 2/M16
SCALE: 3/16" = 1'-0"

Registered Professional Engineer (Civil)
CERTIFICATE NO. 33441
BRIAN P. McBRIDE
Date Signed 6-2-08
ARIZONA U.S.A.
Expires 03/31/11

NO.	DATE	BY	REVISION DESCRIPTION

GLOBAL WATER
RELIABLE • RENEWABLE • REUSABLE
21410 N. 19th Ave. • Ste. 201 • Phoenix, AZ 85027
Ph: 623.580.9600 • Fx: 623.580.9650
www.gwresources.com

HASSAYAMPA NORTHEAST CAMPUS 1 WATER RECLAMATION FACILITY

McBride Engineering Solutions, Inc.
6100 West Gila Springs Pl., Suite 7
Chandler, AZ. 85226
Phone: (480) 759-9608

CHEMICAL STORAGE AND ODOR CONTROL PLAN AND SECTION

DESIGNED: MJA/DMK
DRAWN: MG/KPB CHECKED: BPM
DATE: 05-30-08
DWG. NO. M16
SHEET 34 OF 81

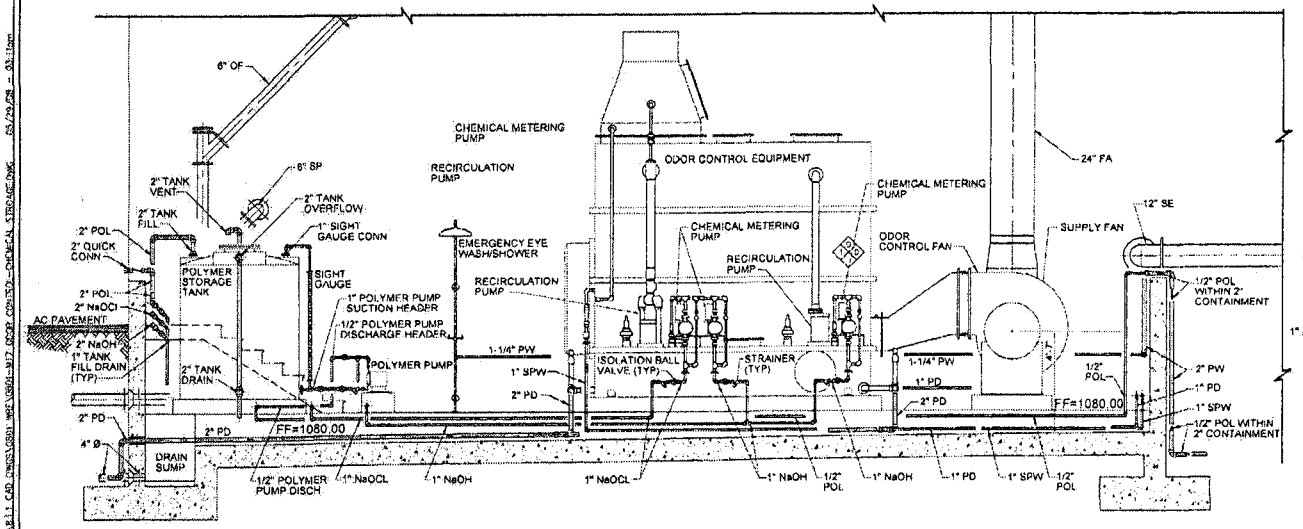

SECTION 1/M16

SCALE: 3/16" = 1'-0"

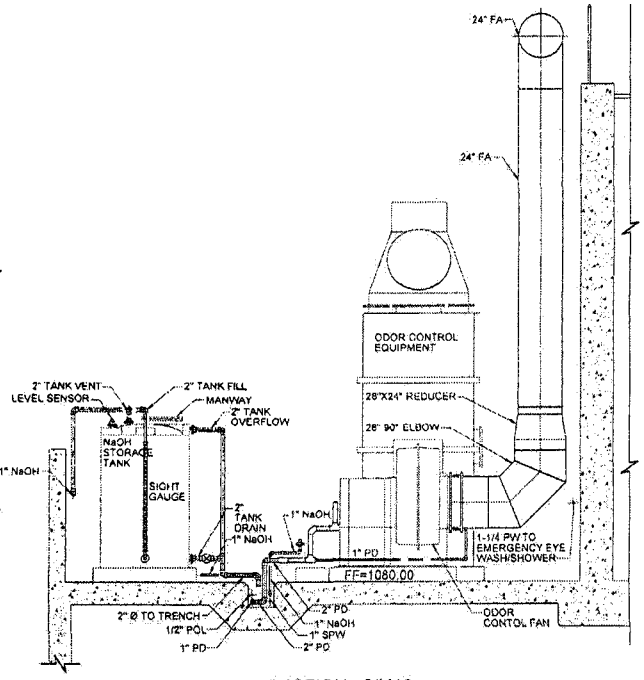

SECTION - 3/M16

SCALE: 3/16" = 1'-0"

Registered Professional Engineer (Civil)
CERTIFICATE NO. 33441
BRIAN P. McBRIDE
Date Signed 6-2-09
ARIZONA U.S.A.
Expires 03/31/11

NO.	DATE	BY	REVISION DESCRIPTION

GLOBAL WATER
RELIABLE · RENEWABLE · REUSABLE
21410 N. 19th Ave. · Ste. 201 · Phoenix, AZ 85027
Ph: 623.580.9600 · Fx: 623.580.9669
www.gwresources.com

HASSAYAMPA NORTHEAST CAMPUS 1 WATER RECLAMATION FACILITY

McBride Engineering Solutions, Inc.
6100 West Gila Springs Pl., Suite 7
Chandler, AZ. 85226
Phone: (480) 759-9608

CHEMICAL STORAGE AND ODOR CONTROL PLAN AND SECTION

DESIGNED: MJ/JDMK
DRAWN: MG/KPB CHECKED: BPM
DATE: 05-30-08
DWG. NO. M17
SHEET 35 OF 61

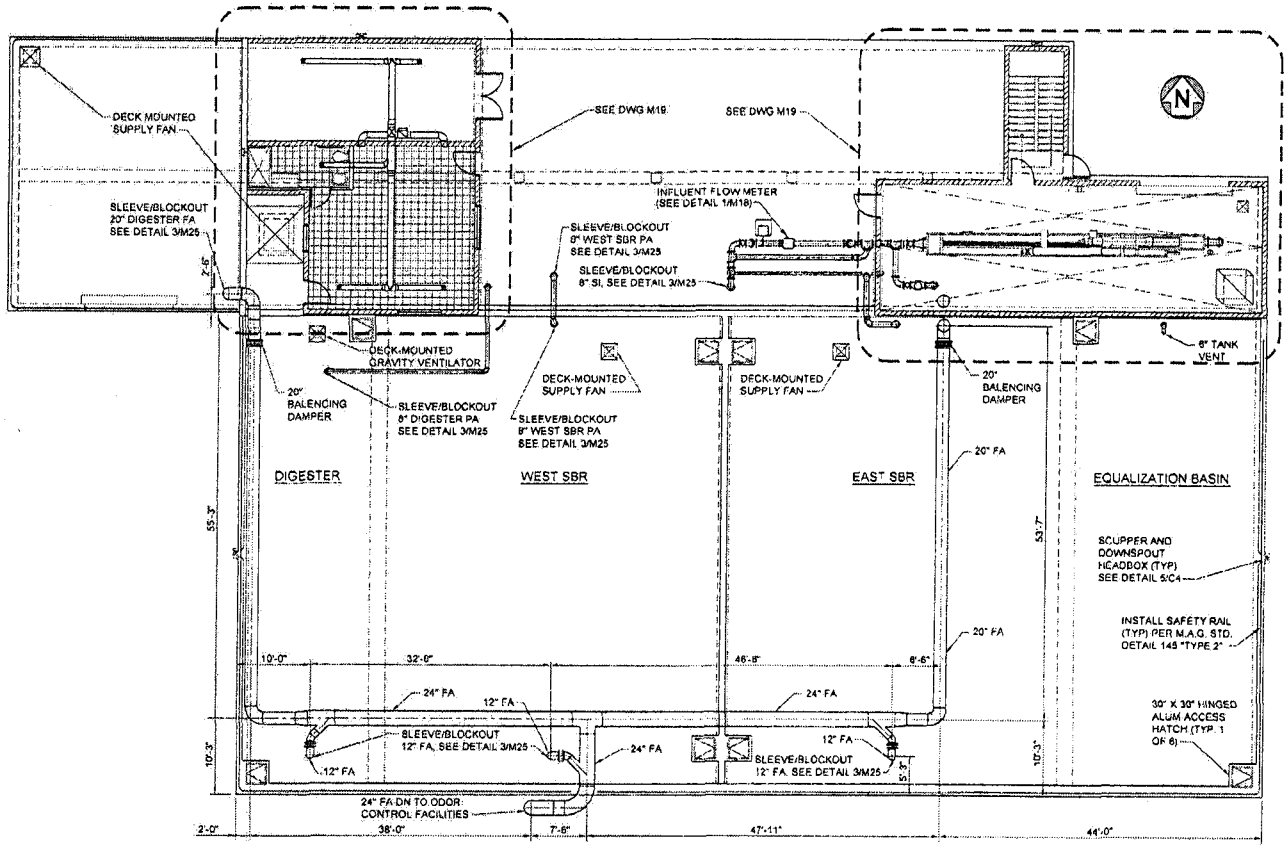

SECTIONAL PLAN
SCALE: 1/16" = 1'-0"

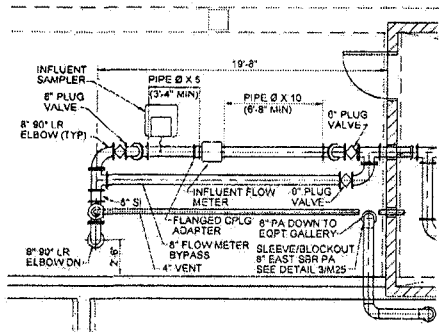

DETAIL 1/M18 - SCREENED INFLUENT FLOW METER
SCALE: 3/16" = 1'-0"

Registered Professional Engineer (Civil)
CERTIFICATE NO. 33441
BRIAN P. McBRIDE
Date Signed 6-2-08
ARIZONA U.S.A.
Expires 03/31/11

NO.	DATE	BY	REVISION DESCRIPTION

GLOBAL WATER
RELIABLE · RENEWABLE · REUSABLE
21410 N. 19th Ave. · Ste. 201 · Phoenix, AZ 85027
Ph: 623.580.9600 · Fx: 623.580.9659
www.gwresources.com

HASSAYAMPA NORTHEAST CAMPUS 1 WATER RECLAMATION FACILITY

McBride Engineering Solutions, Inc.
6100 West Gila Springs Pl., Suite 7
Chandler, AZ. 85226
Phone: (480) 759-9608

MAIN PROCESS STRUCTURE SECTIONAL PLAN

DESIGNED: MJA/DMK
DRAWN: MQ/KPB | CHECKED: BPM
DATE: 05-30-08
DWG. NO. M18
SHEET 38 OF 61

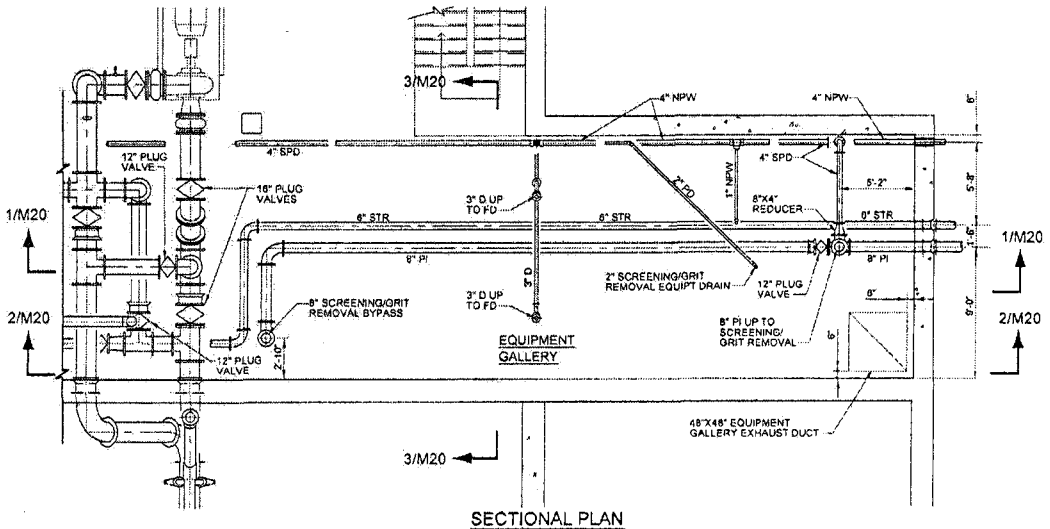

SECTIONAL PLAN
SCALE: 1/8" = 1'-0"

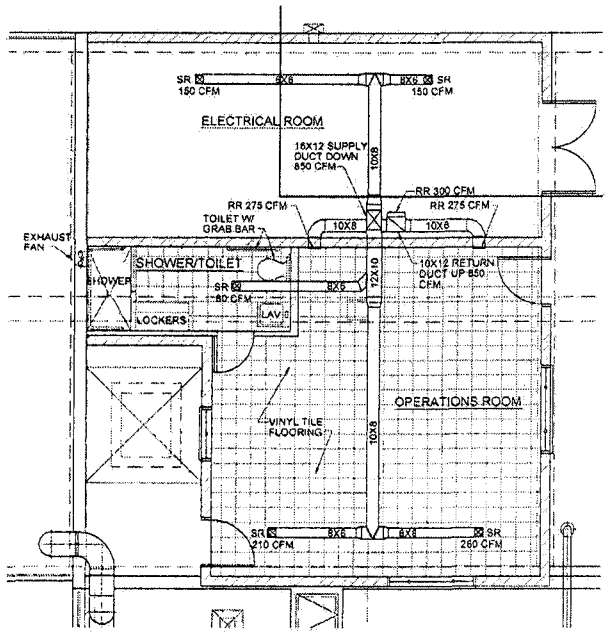

OPERATIONS BUILDING PLAN
SCALE: 1/8" = 1'-0"

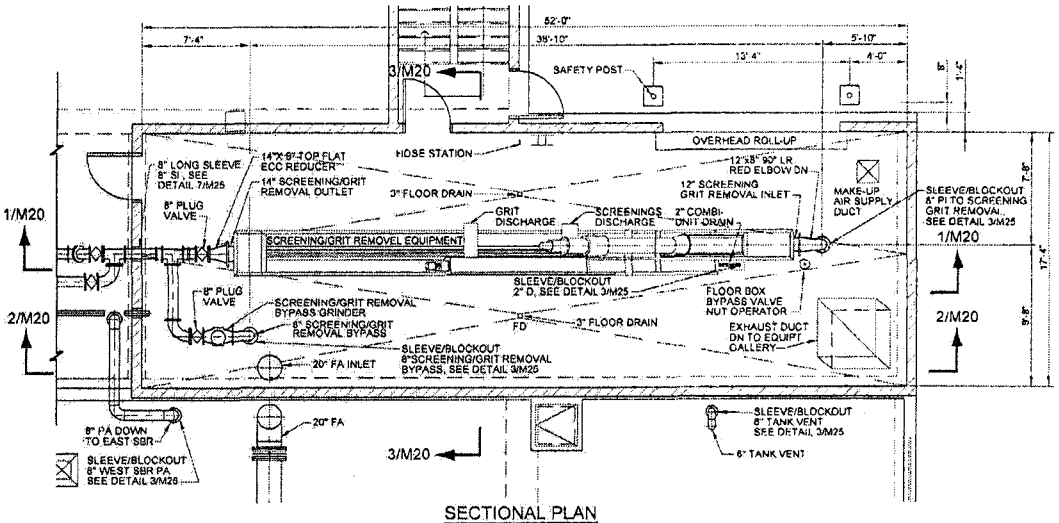

SECTIONAL PLAN
SCALE: 1/8" = 1'-0"

Registered Professional Engineer (Civil)
CERTIFICATE NO. 33441
BRIAN P. McBRIDE
Date Signed 6-2-08
ARIZONA, U.S.A.
Expires 03/31/11

NO.	DATE	BY	REVISION DESCRIPTION

GLOBAL WATER
RELIABLE • RENEWABLE • REUSABLE
21410 N. 19th Ave. • Ste. 201 • Phoenix, AZ 85027
Ph: 623.580.9600 • Fx: 623.580.9610
www.gwresources.com

HASSAYAMPA NORTHEAST CAMPUS 1 WATER RECLAMATION FACILITY

McBride Engineering Solutions, Inc.
6100 West Gila Springs Pl., Suite 7
Chandler, AZ. 85226
Phone: (480) 759-9608

EAST EQUIPMENT GALLERY PLAN
HEADWORKS PLAN
OPERATIONS BULIDING PLAN

DESIGNED: MJA/DMK
DRAWN: MG/KPB CHECKED: BPM
DATE: 05-30-08
DWG. NO. M19
SHEET 37 OF 51

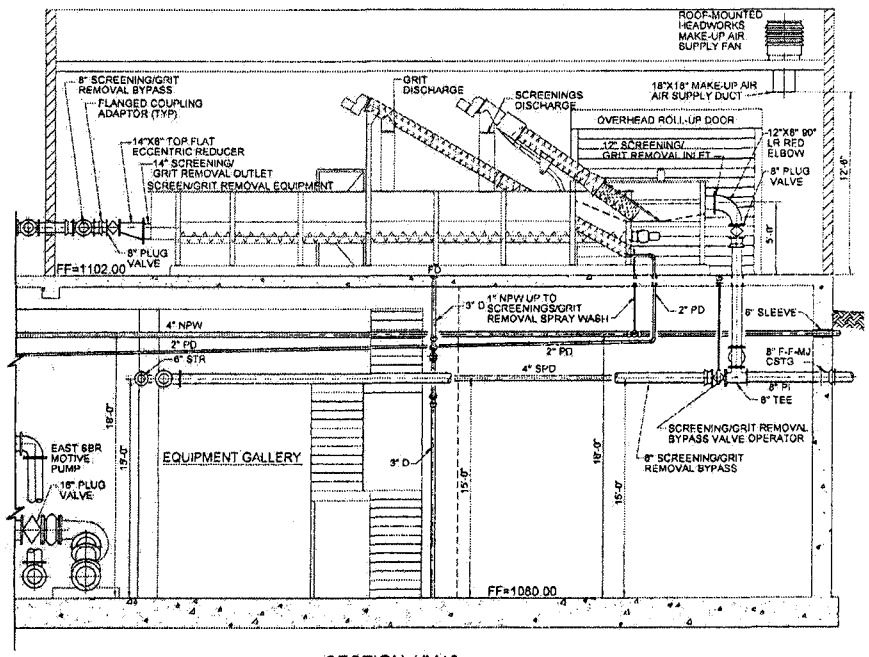

SECTION 1/M19
SCALE: 1/8" = 1'-0"

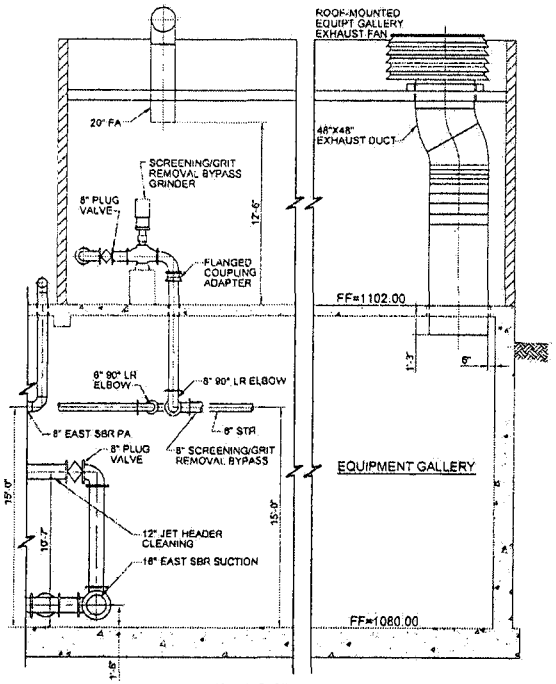

SECTION 2/M19
SCALE: 1/8" = 1'-0"

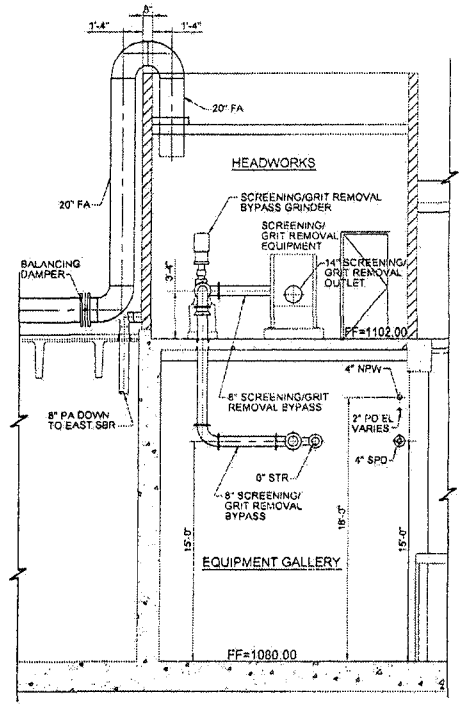

SECTION 3/M19
SCALE: 1/8" = 1'-0"

Registered Professional Engineer (Civil)
CERTIFICATE NO. 33441
BRIAN P. McBRIDE
Date Signed 6-2-08
ARIZONA U.S.A.
Expires 03/31/11

NO.	DATE	BY	REVISION DESCRIPTION

GLOBAL WATER
RELIABLE · RENEWABLE · REUSABLE
21410 N. 19th Ave. · Ste. 201 · Phoenix, AZ 85027
Ph: 623.580.9800 · Fx: 623.580.9659
www.gwresources.com

HASSAYAMPA NORTHEAST CAMPUS 1 WATER RECLAMATION FACILITY

McBride Engineering Solutions, Inc.
6100 West Gila Springs Pl., Suite 7
Chandler, AZ. 85226
Phone: (480) 759-9608

EAST EQUIPMENT GALLERY SECTIONS HEADWORKS SECTIONS

DESIGNED: MJA/DMK
DRAWN: MG/KPB CHECKED: BPM
DATE: 05-30-08
DWG. NO. M20
SHEET 38 OF 61

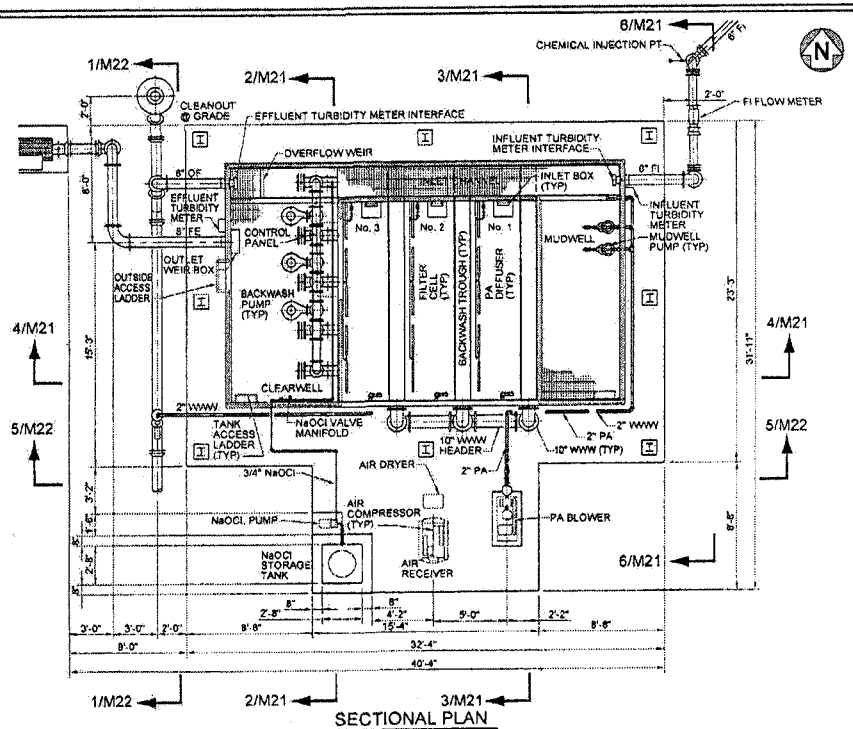

SECTIONAL PLAN
SCALE: 1/8" = 1'-0"

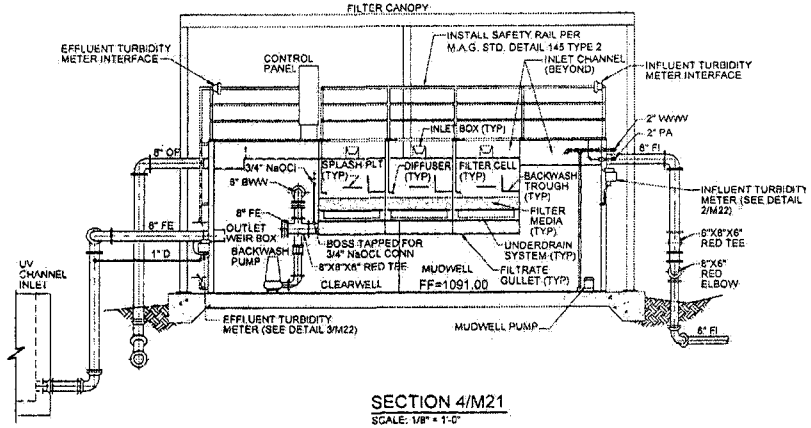

SECTION 4/M21
SCALE: 1/8" = 1'-0"

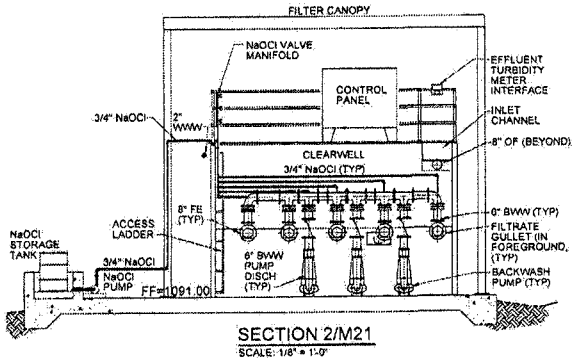

SECTION 2/M21
SCALE: 1/8" = 1'-0"

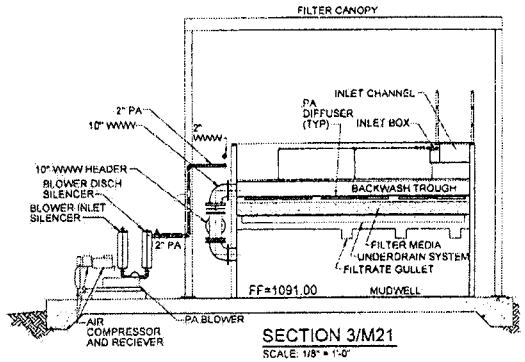

SECTION 3/M21
SCALE: 1/8" = 1'-0"

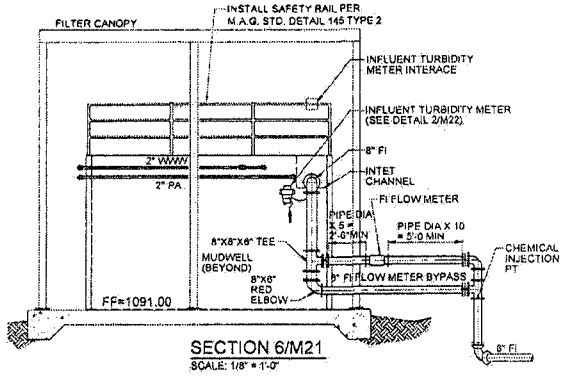

SECTION 6/M21
SCALE: 1/8" = 1'-0"

Registered Professional Engineer (Civil)
CERTIFICATE NO. 33441
BRIAN P. McGRIDE
Date Signed 6-2-08
ARIZONA U.S.A.
Expires 03/31/11

NO.	DATE	BY	REVISION DESCRIPTION

GLOBAL WATER
RELIABLE · RENEWABLE · REUSABLE
21410 N. 19th Ave. · Ste. 201 · Phoenix, AZ 85027
Ph: 623.580.9600 · Fx: 623.580.9659
www.gwresources.com

HASSAYAMPA NORTHEAST CAMPUS 1 WATER RECLAMATION FACILITY

McBride Engineering Solutions, Inc.
6100 West Gila Springs Pl., Suite 7
Chandler, AZ. 85226
Phone: (480) 759-9608

FILTER PLAN, SECTIONS AND DETAILS

DESIGNED: MJA/OMK
DRAWN: MG/KPB CHECKED: BPM
DATE: 05-30-08
DWG. NO. M21
SHEET 39 OF 51

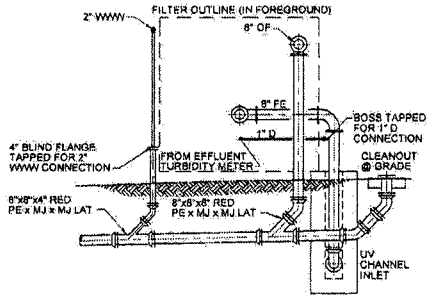

SECTION 1/M21
SCALE: 1/8" = 1'-0"

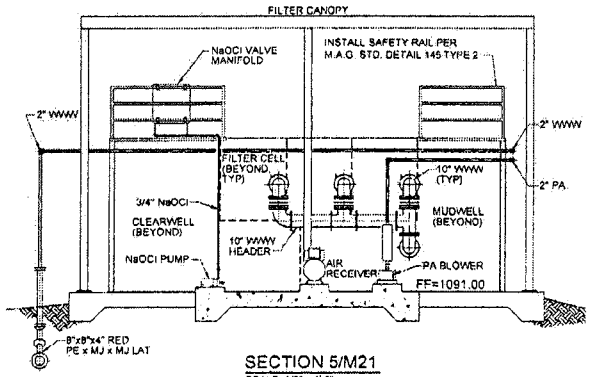

SECTION 5/M21
SCALE: 1/8" = 1'-0"

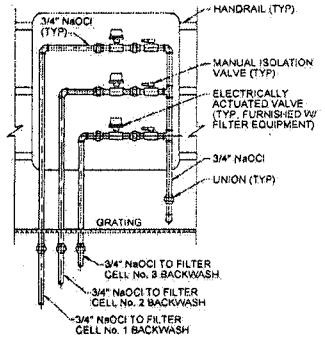

ELEVATION - LOOKING SOUTH

DETAIL 1/M21 - NaOCl VALVE MANIFOLD
NOT TO SCALE

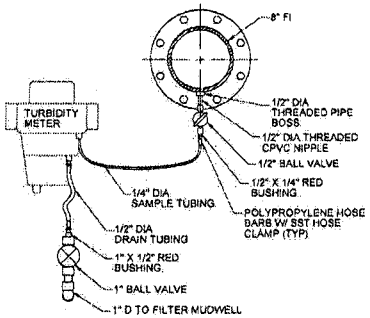

ELEVATION - LOOKING WEST

DETAIL 2/M21 - INFLUENT TURBIDITY METER
NOT TO SCALE

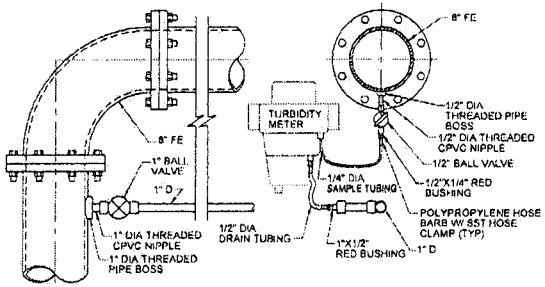

ELEVATION - LOOKING EAST

DETAIL 3/M21 - EFFLUENT TURBIDITY METER
NOT TO SCALE

Registered Professional Engineer (Civil)
CERTIFICATE NO. 33441
BRIAN P. McBRIDE
Date Signed 6-2-08
ARIZONA U.S.A.
Expires 03/31/11

NO.	DATE	BY	REVISION DESCRIPTION

GLOBAL WATER
RELIABLE · RENEWABLE · REUSABLE
21410 N. 19th Ave. · Ste. 201 · Phoenix, AZ 85027
Ph: 623.580.9600 · Fx: 623.580.9659
www.gwresources.com

HASSAYAMPA NORTHEAST CAMPUS 1 WATER RECLAMATION FACILITY

McBride Engineering Solutions, Inc.
6100 West Gila Springs Pl., Suite 7
Chandler, AZ. 85226
Phone: (480) 759-9608

FILTER PLAN, SECTIONS AND DETAILS

DESIGNED: MJA/DMK
DRAWN: MG/KPB CHECKED: BPM
DATE: 05-30-08
DWG. NO. M22
SHEET 40 OF 61

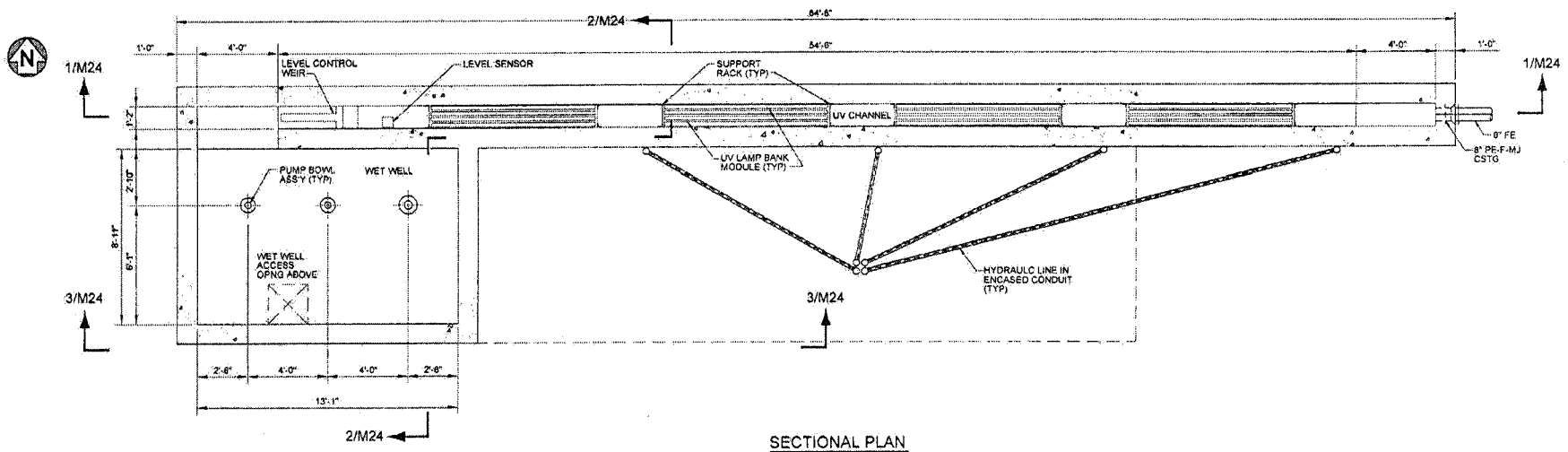

SECTIONAL PLAN
SCALE: 3/16" = 1'-0"

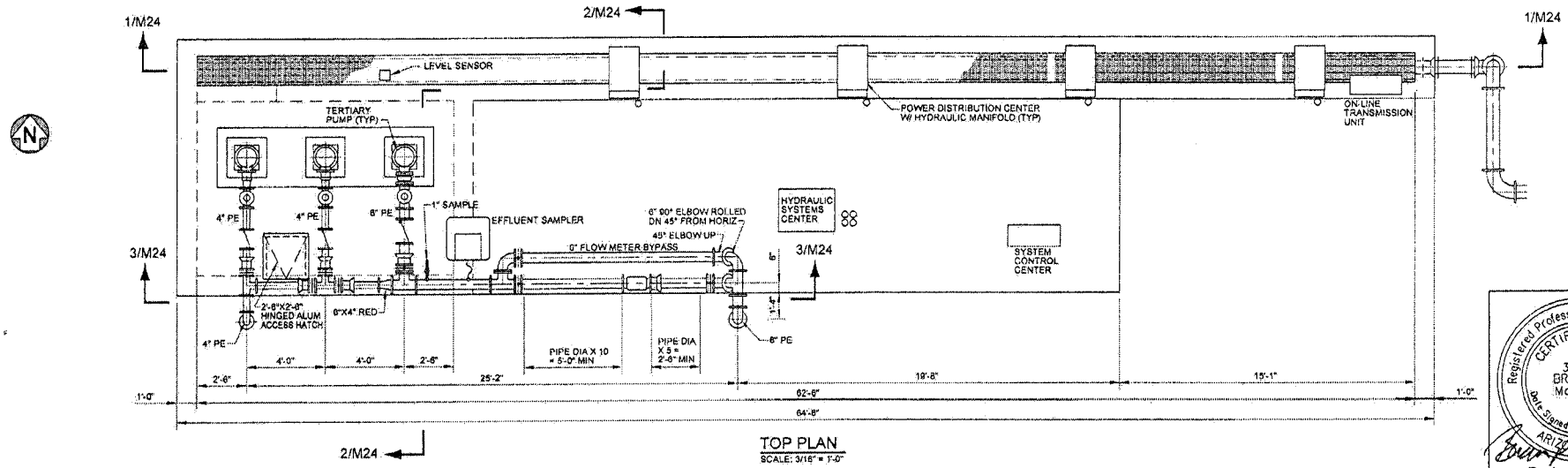

TOP PLAN
SCALE: 3/16" = 1'-0"

Registered Professional Engineer (Civil)
CERTIFICATE NO. 33441
BRIAN P. McBRIDE
Date Signed 6-2-08
ARIZONA, U.S.A.
Expires 03/31/11

NO.	DATE	BY	REVISION DESCRIPTION

GLOBAL WATER
RELIABLE · RENEWABLE · REUSABLE
21410 N. 19th Ave. · Ste. 201 · Phoenix, AZ 85027
Ph: 623.580.9600 · Fx: 623.580.9699
www.gwresources.com

HASSAYAMPA NORTHEAST CAMPUS 1 WATER RECLAMATION FACILITY

McBride Engineering Solutions, Inc.
6100 West Gila Springs Pl., Suite 7
Chandler, AZ. 85226
Phone: (480) 759-9608

ULTRAVIOLET DISINFECTION AND TERTIARY PUMP STATION PLANS AND DETAILS

DESIGNED: MJA/DMK
DRAWN: MG/KPB CHECKED: BPM
DATE: 06-30-08
DWG. NO. M23
SHEET 41 OF 61

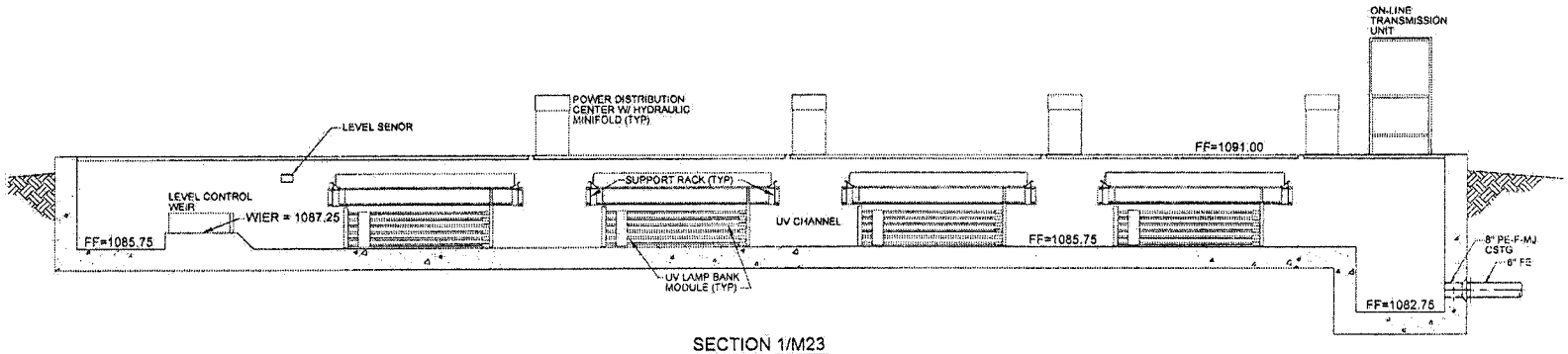

SECTION 1/M23
SCALE: 3/16" = 1'-0"

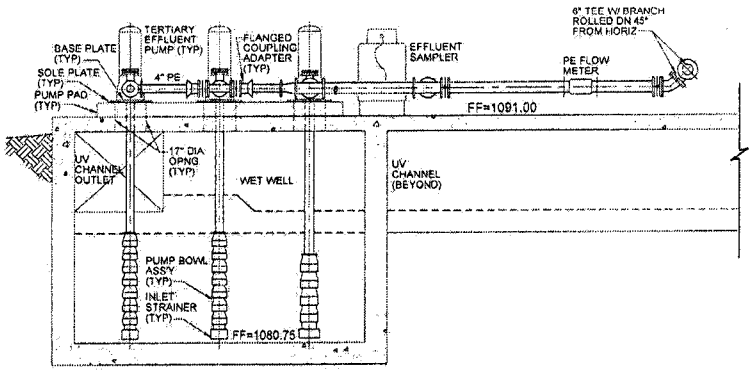

SECTION 3/M23
SCALE: 3/16" = 1'-0"

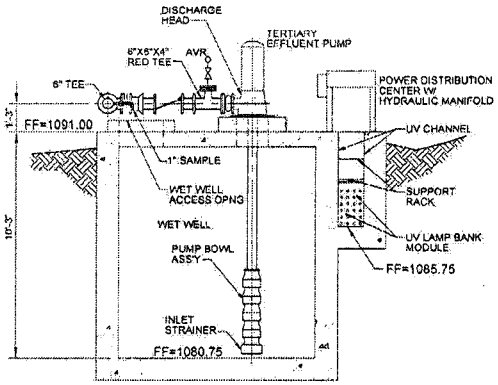

SECTION 2/M23
SCALE: 3/16" = 1'-0"

Registered Professional Engineer (Civil)
CERTIFICATE NO. 33441
BRIAN P. McBRIDE
Date Signed 6-2-08
ARIZONA, U.S.A.
Expires 03/31/11

NO.	DATE	BY	REVISION DESCRIPTION

GLOBAL WATER
RELIABLE · RENEWABLE · REUSABLE
21410 N. 19th Ave. · Ste. 201 · Phoenix, AZ 85027
Ph: 623.580.9600 · Fx: 623.580.9659
www.gwresources.com

HASSAYAMPA NORTHEAST CAMPUS 1 WATER RECLAMATION FACILITY

McBride Engineering Solutions, Inc.
6100 West Gila Springs Pl., Suite 7
Chandler, AZ. 85226
Phone: (480) 759-9608

ULTRAVIOLET DISINFECTION AND TERTIARY PUMP STATION PLANS AND DETAILS

DESIGNED: MJA/DMK
DRAWN: MG/KPB CHECKED: BPM
DATE: 05-30-08
DWG. NO. M24
SHEET 42 OF 61

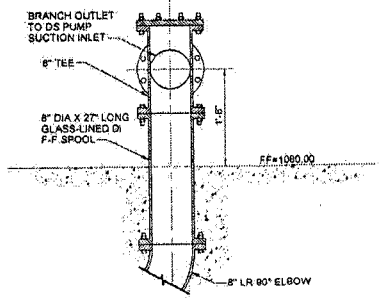

DETAIL 1/M25
SCALE: 1/2" = 1'-0"

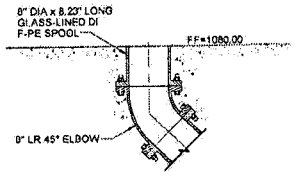

DETAIL 2/M25
SCALE: 1/2" = 1'-0"

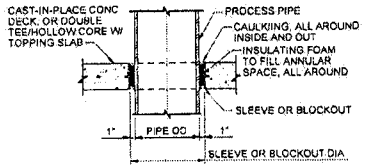

DETAIL 3/M25
SCALE: 1/2" = 1'-0"

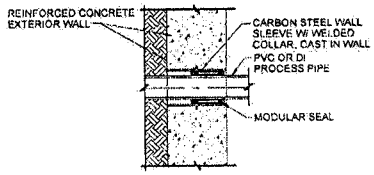

DETAIL 4/M25
SCALE: 1/2" = 1'-0"

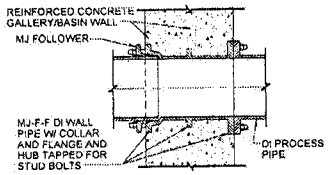

DETAIL 5/M25
SCALE: 1/2" = 1'-0"

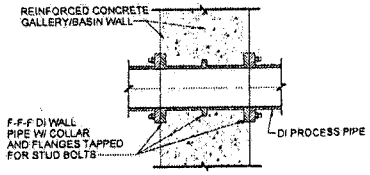

DETAIL 6/M25
SCALE: 1/2" = 1'-0"

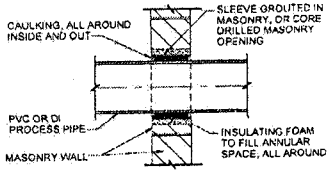

DETAIL 7/M25
SCALE: 1/2" = 1'-0"

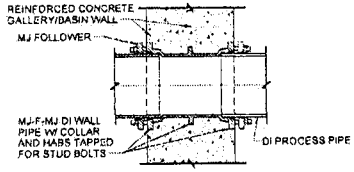

DETAIL 8/M25
SCALE: 1/2" = 1'-0"

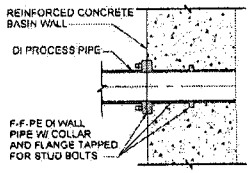

DETAIL 9/M25
SCALE: 1/2" = 1'-0"

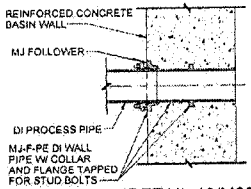

DETAIL 10/M25
SCALE: 1/2" = 1'-0"

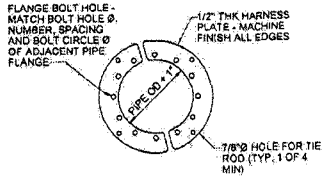

DETAIL 11/M25
TYPICAL HARNESS PLATE
NOT TO SCALE

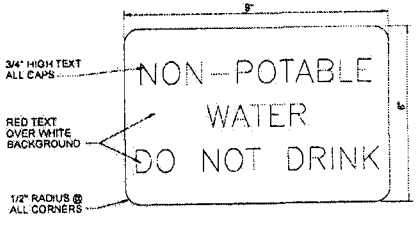

DETAIL 12/M25 - NPW WARNING SIGN
NOT TO SCALE NOTE: POST THIS SIGN AT EVERY NPW TAP, HOSE BIBB OR HYDRANT

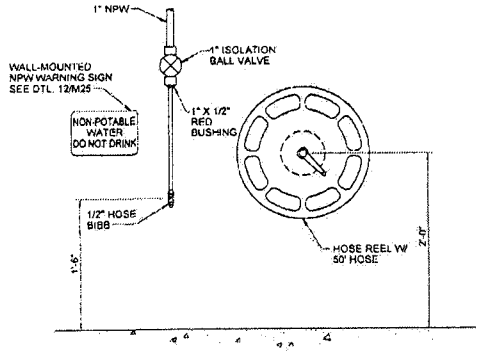

DETAIL 13/M25 - TYPICAL NPW HOSE STATION
SCALE: 3/4" = 1'-0"

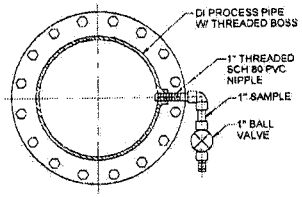

DETAIL 14/M25 - SAMPLE TAP AT 16" SBR RETURN AND AT 6" TE
SCALE: 3/4" = 1'-0"

Registered Professional Engineer (Civil)
CERTIFICATE NO. 33441
BRIAN P. McBRIDE
Date Signed 6-2-08
ARIZONA, U.S.A.
Expires 03/31/11

NO	DATE	BY	REVISION DESCRIPTION

GLOBAL WATER
RELIABLE · RENEWABLE · REUSABLE
21410 N. 19th Ave. · Ste. 201 · Phoenix, AZ 85027
Ph: 623.580.9600 · Fx: 623.580.9659
www.gwresources.com

HASSAYAMPA NORTHEAST CAMPUS 1 WATER RECLAMATION FACILITY

McBride Engineering Solutions, Inc.
6100 West Gila Springs Pl., Suite 7
Chandler, AZ. 85226
Phone: (480) 759-9608

DETAILS

DESIGNED: MJA/DMK
DRAWN: MGK/PG CHECKED: BPM
DATE: 05-30-08
DWG. NO. M25
SHEET 43 OF 61

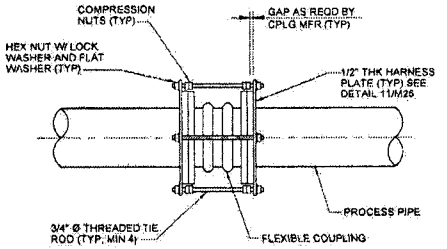

DETAIL 1/M26 - TYPICAL TIED FLEXIBLE COUPLING

NOT TO SCALE

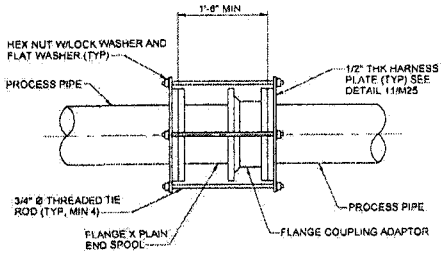

DETAIL 2/M26 - TYPICAL HARNESSED FLANGE COUPLING ADAPTOR - DUCTILE IRON PIPE

NOT TO SCALE

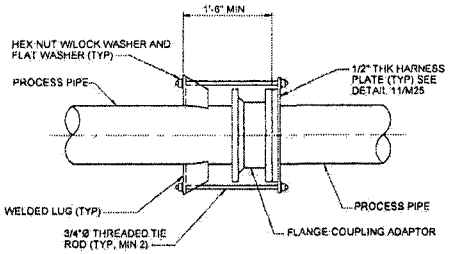

DETAIL 3/M26 - TYPICAL HARNESSED FLANGE COUPLING ADAPTOR - STEEL PIPE

NOT TO SCALE

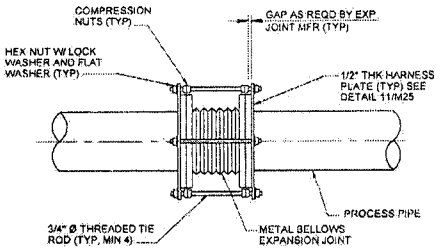

DETAIL 4/M26 - TYPICAL TIED EXPANSION JOINT

NOT TO SCALE

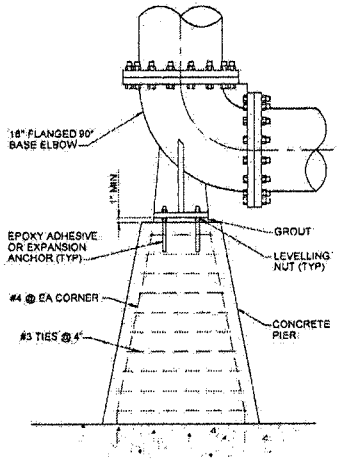

DETAIL 5/M26 - SBR RETURN BASE ELBOW

SCALE: 1/2" = 1'-0"

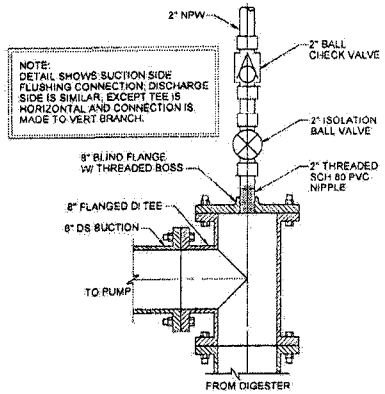

DETAIL 6/M26 - FLUSHING CONNECTION

SCALE: 3/4" = 1'-0"

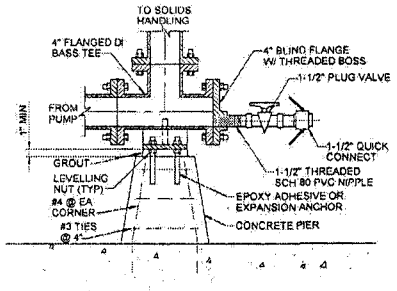

DETAIL 7/M26 - DS DISCHARGE BASE TEE AND DRAIN

SCALE: 3/4" = 1'-0"

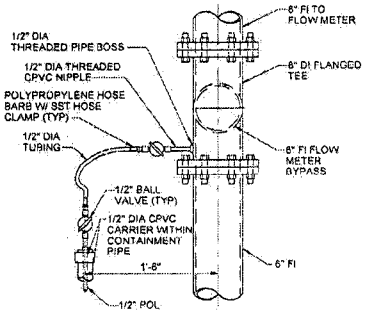

DETAIL 8/M26 - CHEMICAL INJECTION AT FILTER INFLUENT

SCALE: 3/4" = 1'-0"

Registered Professional Engineer (Civil)
CERTIFICATE NO. 33441
BRIAN P. McBRIDE
Date Signed 6-2-08
ARIZONA U.S.A.
Expires 03/31/11

NO	DATE	BY	REVISION DESCRIPTION

GLOBAL WATER
RELIABLE · RENEWABLE · REUSABLE
21410 N. 19th Ave. · Ste. 201 · Phoenix, AZ 85027
Ph: 623.580.9600 · Fx: 623.580.9659
www.gwresources.com

HASSAYAMPA NORTHEAST CAMPUS 1 WATER RECLAMATION FACILITY

McBride Engineering Solutions, Inc.
6100 West Gila Springs Pl., Suite 7
Chandler, AZ. 85226
Phone: (480) 759-9608

DETAILS

DESIGNED: MJ/VDMK
DRAWN: MG/KPB CHECKED: BPM
DATE: 05-30-08
DWG. NO. M26
SHEET 44 OF 81

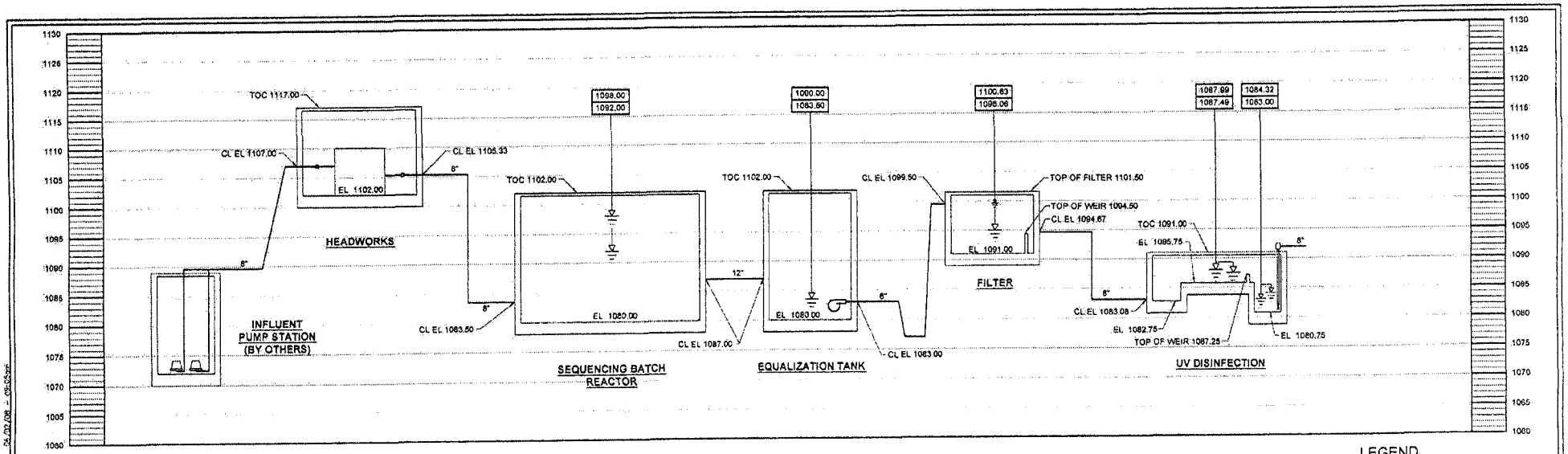

HYDRAULIC PROFILE

HORIZONTAL SCALE: NONE
VERTICAL SCALE: 1/16" = 1'-0"

LEGEND

FL = FLOOR
TOC = TOP OF CONCRETE
TOG = TOP OF GRATE
TOW = TOP OF WALL

XXX.XX HIGH WATER ELEVATION
XXX.XX LOW WATER ELEVATION
HIGH WATER ELEVATION
LOW WATER ELEVATION

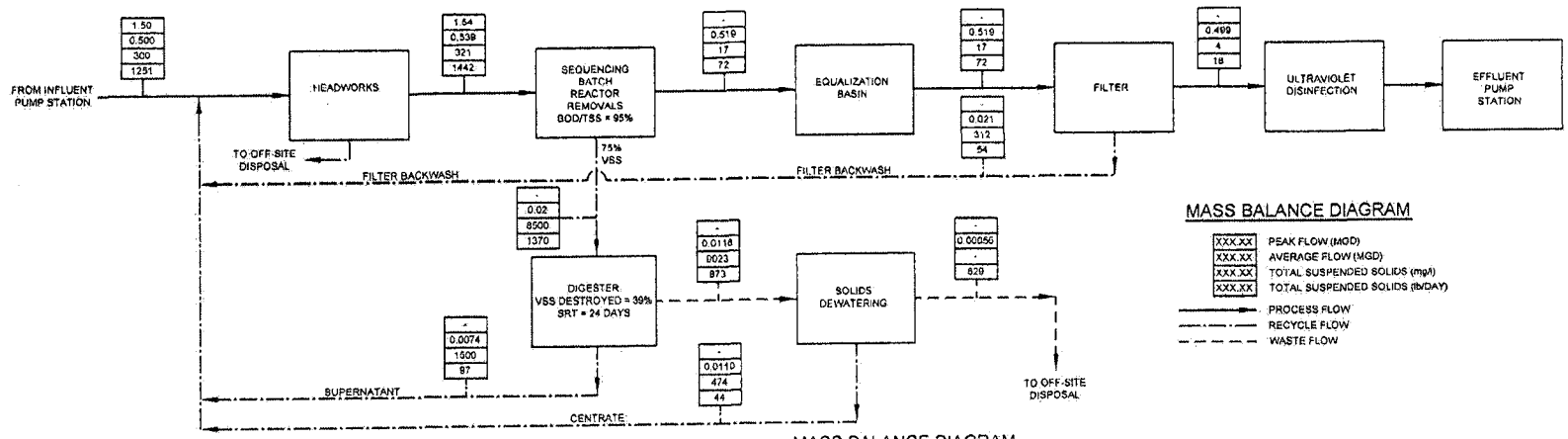

MASS BALANCE DIAGRAM

NOT TO SCALE

MASS BALANCE DIAGRAM

XXX.XX PEAK FLOW (MGD)
XXX.XX AVERAGE FLOW (MGD)
XXX.XX TOTAL SUSPENDED SOLIDS (mg/l)
XXX.XX TOTAL SUSPENDED SOLIDS (lb/DAY)

PROCESS FLOW
RECYCLE FLOW
WASTE FLOW

Registered Professional Engineer (Civil)
CERTIFICATE NO. 33441
BRIAN P. McBRIDE
Date Signed 6-2-08
ARIZONA U.S.A.
Expires 03/31/11

NO.	DATE	BY	REVISION DESCRIPTION

GLOBAL WATER
RELIABLE · RENEWABLE · REUSABLE
21410 N. 19th Ave. · Ste. 201 · Phoenix, AZ 85027
Ph: 623.580.9600 · Fx: 623.580.9669
www.gwresources.com

HASSAYAMPA NORTHEAST CAMPUS 1 WATER RECLAMATION FACILITY

McBride Engineering Solutions, Inc.
6100 West Gila Springs Pl., Suite 7
Chandler, AZ. 85226
Phone: (480) 759-9608

HYDRAULIC PROFILE
MASS BALANCE DIAGRAM

DESIGNED: MJA/DMK
DRAWN: MG/KPB CHECKED: BPM
DATE: 05-30-08
DWG. NO. M27
SHEET 45 OF 61

ISA INSTRUMENT INDENTIFICATION TABLE

	FIRST LETTERS		SUCCEEDING LETTERS		
	MEASURED OR INITIATING VARIABLE	MODIFIER	READOUT OR PASSIVE FUNCTION	OUTPUT FUNCTION	MODIFIER
A	ANALYZER		ALARM		AUTO
B	BURNER, COMBUSTION				
C	CONDUCTIVITY			CONTROL	CLOSED
D	DENSITY	DIFFERENTIAL			
E	VOLTAGE		ELEMENT		
F	FLOW	RATIO			
G	GAUGE		GLASS, VIEWING DEVICE		
H	HAND				HIGH
I	CURRENT		INDICATE		
J	POWER	SCAN			
K	TIME, TIME SCHED.	TIME RATE OF CHANGE		CONTROL STATION	
L	LEVEL		LIGHT		LOW
M	MOTION				MIDDLE, INTERMIDIATE
N	INTRUSION				NORMAL
O	TORQUE		ORIFICE, RESTRICTION		OPEN
P	PRESSURE		POINT, CONNECTION		STOP
Q	QUANTITY	INTEGRATE, TOTALIZE			
R	RADIATION		RECORD, OR PRINT		RUN, OR REMOTE
S	SPEED, FREQUENCY	SAFETY		SWITCH	START
T	TEMPERATURE			TRANSMIT	
U	MULTIVARIABLE		MULTIFUNCTION	MULTIFUNCTION	MULTIFUNCTION
V	VIBRATION			VALVE, LOUVER	
W	WEIGHT		WELL		
X	MOTOR	X-AXIS	UNCLASSIFIED	UNCLASSIFIED	UNCLASSIFIED
Y	EVENT, STATE, OR PRESENCE	Y-AXIS		RELAY, COMPUTE, CONVERT	
Z	POSITION	Z-AXIS		DRIVER, ACTUATOR, FINAL CONTROL ELEMENT	

P&ID ABBREVIATIONS

A	AMPERE	JB	JUNCTION BOX	PRES	PRESSURE
AFD	ADJUSTABLE FREQUENCY DRIVE	L, LO	LOW	PS	PRESSURE SWITCH
AI	ANALOG INPUT	LAN	LOCAL AREA NETWORK	PSI	POUNDS PER SQUARE INCH
AIC	AMPS INTERRUPTING CAPACITY	LC	LOOP CONTROLLER	PV	PROCESS VARIABLE
ARV	AIR RELIEF VALVE	LCP	LOCAL CONTROL PANEL	RAS	RETURN ACTIVATED SLUDGE
AO	ANALOG OUTPUT	LOS	LOCK-OFF-STOP	RAW	RAW WATER
AS	AIR SUPPLY	LR	LOCAL/REMOTE	REM	REMOTE
ATS	AUTOMATIC TRANSFER SWITCH	LS	LEVEL (i.e.FLOAT) SWITCH	RF	RADIO FREQUENCY
AUTO	AUTOMATIC	M	MOTOR	RIO	REMOTE INPUT OUTPUT
CB	CIRCUIT BREAKER	MA	MANUAL/AUTO	RS	RAW SEWAGE
CL2	CHLORINE	mA	MILLIAMP	RSP	RAW SEWAGE PUMP
CON	CONTACTOR	MC	MANUFACTURE CABLE	RST	RESET
CU	COPPER, BARE	MCC	MOTOR CONTROL CENTER	RTD	RESISTANCE TEMPERATURE DEVICE
CV	CONTROL VALVE	MCP	MOTOR CIRUIT PROTECTOR	RTU	REMOTE TELEMERY UNIT
DCS	DISTRIBUTED CONTROL SYSTEM	MFR(S)	MANUFACTURER(S)	RUN#	RUN (FAST SPEED)
DI	DISCRETE INPUT	MGD	MILLION GALLONS PER DAY	RUN#	RUN (SLOW SPEED)
DO	DISSOLVED OXYGEN, DISCRETE OUTPUT	MGL	MILLIGRAMS PER LITER	SB	SLUDGE BLANKET
DP	DIFFERENTIAL PRESSURE	MH	MANHOLE	SEQ	SERVICE ENTRANCE EQUIPMENT
DWG	DRAWING	MLR	MIXED LIQUOR RETURN	SES	SERVICE ENTRANCE SECTION
EGO	EMERGENCY GAS OFF	MO	MOISTURE	SLC	SINGLE LOOP CONTROLLER
ETM	ELAPSED TIME METER	MOD	MODULATED	SLOS	START-LOCK-OFF-STOP
ETM#	ELAPSED TIME METER (FAST SPEED)	MTU	MASTER TELEMETRY UNIT	SO2	SULFUR DIOXIDE
ETM#	ELAPSED TIME METER (SLOW SPEED)	NPW	NON-POTABLE WATER	SOV	SOLENOID OPERATED VALVE
EOL	ELECTRINIC OVERLOAD	NS	NITROGEN SUPPLY	SP	SET POINT
EXIST	EXISTING	NTU	TURBIDITY	SPD	SPEED
FA	FOUL AIR	O/C	OPEN / CLOSE	SPR	SPARE
FC	FAIL CLOSED	OCA	OPEN-CLOSE-REMOTE	SS	START/STOP (MAINTAINED)
FE	FINAL EFFLUENT	OIT	OPERATOR INTERFACE TERMINAL	SSS	SOLID STATE STARTER (SOFT START)
FR	FORWARD-REVERSE	OL	OVERLOAD	STR	MOTOR STARTER
FS	FLOAT SWITCH	OO	ON / OFF (MAINTAINED)	TAH	TEMPERATURE ALARM HIGH
FVNR	FULL VOLTAGE NON-REVERSING	OOA	ON-OFF-AUTO	T/M	TEMPERATURE AND/OR MOISTURE
FW	FINISHED WATER	OOR	ON-OFF-REMOTE	TEMP	TEMPERATURE
GND	GROUND	OSC	OPEN-STOP-CLOSE	TS	TEMPERATURE SWITCH
GAL	GALLONS	PAH	PRESSURE ALARM HIGH	TSS	TOTAL SUSPENDED SOLIDS
GPD	GALLONS PER DAY	PER	PERMISSIVE	UG	UNDERGROUND
GPH	GALLONS PER HOUR	PLC	PROGRAMMABLE LOGIC CONTROLLER	USD	UP/STOP/DOWN
GPM	GALLONS PER MINUTE	PNL	PANEL	V	VOLT
H, HI	HIGH	PO	PULSE OUTPUT	VFD	VARIABLE FREQUENCY DRIVE
H2S	HYDROGEN SULFIDE	POS	POSITION	W	WATER
HMI	HUMAN MACHINE INTERFACE	POT	POTENTIOMETER	WAS	WASTE ACTIVATED SLUDGE
HOA	HANDS-OFF-AUTO	PPG	POUNDS PER GALLON	WW	WASTEWATER
I	CURRENT	PPH	POUNDS PER HOUR	XMTR	TRANSMITTER
IO	INPUT/OUTPUT	PPM	PARTS PER MILLION	ZS	POSITION (i.e. LIMIT) SWITCH
IOE	INTERNAL-OFF-EXTERNAL	PR	PAIR		

TAG NUMBERS AND DESIGNATIONS

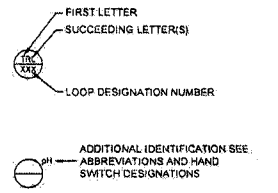

HAND SWITCH DESIGNATIONS

ES	EMERGENCY STOP
HOA	HAND-OFF-AUTO
HOR	HAND-OFF-REMOTE
HORA	HAND-OFF-REMOTE-AUTO
JOA	JOG-OFF-AUTO
LOR	LOCAL-OFF-REMOTE
LR	LOCAL/REMOTE
OC	OPEN-CLOSE
OO	ON-OFF

LINE SYMBOLS

- MAJOR PROCESS PIPING OR FLOW CHANNEL
- EXISTING PROCESS PIPING
- SECONDARY PROCESS PIPING
- EXISTING SECONDARY PROCESS PIPING
- MISCELLANEOUS PIPING
- EXISTING MISCELLANEOUS PIPING
- EXISTING PIPING AND EQUIPMENT OR FUTURE PIPING AND EQUIPMENT
- ELECTRICAL SIGNAL
- HYDRAULIC SIGNAL
- PNEUMATIC SIGNAL
- ELECTRICAL DIRECTION ARROW
- SIGNAL CONNECTION POINT
- FLOW ARROW FOR PROCESS PIPING
- 1-3 /A — PROCESS OR SIGNAL LINE GOING TO ANOTHER SHEET
- 1-2 /A — PROCESS OR SIGNAL LINE FROM ANOTHER SHEET (MATCH LETERS)
- PROCESS LINES CROSSING (NOT CONNECTED)
- INTERNAL SYSTEM SIGNAL LINK (SOFTWARE OR DATA LINK)

P&ID INTERFACE SYMBOLS

- BBB X AAA — PILOT LIGHT X= LENS COLOR R=RED, G=GREEN, A=AMBER B=BLUE
- BBB CCC AAA — FIELD DEVICE
- BBB CCC AAA — PANEL DEVICE
- BBB CCC AAA PNL — DEVICE MOUNTED IN SUBPANEL
- BBB CCC — REMOTE I/O TERMINAL
- BBB CCC — HMI OR OIT FUNCTION.
- 1 X — INTERLOCK DEVICE OR RELAY X=NOTE REF.
- 1/1 — DUAL CHANNEL CURRENT ISOLATOR
- DISCRETE INPUT
- DISCRETE OUTPUT
- ANALOG INPUT
- ANALOG OUTPUT
- PULSE INPUT

NOTE:
REFER TO ISA INSTRUMENT IDENTIFICATION TABLE FOR DEFINITION OF LETTERS BBB INSIDE THE BUBBLES. CCC REPRESENTS LOOP ID (IF USED). SEE ABBREVIATIONS LIST FOR SUPERSCRIPT AAA.

P&ID VALVE SYMBOLS

- GATE VALVE
- BUTTERFLY VALVE
- MOTOR OPERATED PLUG VALVE
- ECCENTRIC PLUG VALVE
- BALL VALVE
- 3 WAY VALVE
- 4 WAY VALVE
- CHECK VALVE
- BALL CHECK VALVE
- MOTOR OPERATED GATE VALVE
- MOTOR OPERATED BUTTERFLY VALVE
- AIR RELEASE VALVE
- SWING CHECK VALVE
- KNIFE VALVE
- STOP CHECK VALVE
- MOTOR OPERATED PLUG VALVE
- SOLENOID VALVE
- PUMP CONTROL VALVE
- PRESSURE REGULATOR VALVE
- BACK PRESSURE VALVE
- PRESSURE RELIEF VALVE
- RELIEF VALVE
- SURGE ANTICIPATOR VALVE
- PLUG VALVE
- MOTOR OPERATED SLEEVE VALVE
- MOTOR OPERATED PINCH VALVE

P&ID EQUIPMENT AND PROCESS SYMBOLS

- METERING PUMP WITH MANUAL STROKE CONTROL
- ROTARY LUBE PUMP
- SUBMERSIBLE MIXER
- AERATOR
- SUBMERSIBLE PUMP
- DIESEL GENERATOR
- CENTRIFUGAL PUMP
- BLOWER
- MOTOR ACTUATOR
- PNUEMATIC ACTUATOR
- SOLENOID
- VERTICAL TURBINE PUMP
- CHLORINE TANK
- WEIGHT SCALE
- AIR COMPRESSOR
- SLUICE GATE
- SAMPLER
- PROPELLER FLOWMETER ELEMENT
- MAGNETIC FLOWMETER ELEMENT
- FLOWMETER
- INSERTION TYPE MASS FLOW METER
- MASS FLOW METER ANNUBAR TYPE
- DRAIN
- OUTLET SILENCER
- INLET SILENCER
- ROTAMETER
- AIR FILTER
- EJECTOR
- DIAPHRAGM SEAL
- DIFFUSER
- DIAPHRAGM
- Y-TYPE STRAINER
- IPS CORPORATION STOP
- PVC DIFFUSER WITH IPS CORPORATION STOP

SENSING, INDICATION, AND CONTROL SYMBOLS

- LE — ULTRASONIC LEVEL TRANSDUCER
- LS — FLOAT SWITH
- BEACON — BEACON
- STOP — INDICATING LIGHT
- HS HOA — HAND SWITCH
- AIT ORP — ORP ANALYZER
- AIT pH — pH ANALYZER
- AE — ANALYER ELEMENT
- AE DO — CO SENSOR
- AE ORP — ORP SENSOR
- AE pH — pH SENSOR
- AIT DO — DO ANALYZER
- AE CL2 — RESIDUAL CL2 CHORINE SENSOR
- AIT CL2 — RESIDAUL CL2 CHLORINE ANALYZER

Registered Professional Engineer (Civil)
CERTIFICATE NO. 33441
BRIAN P. McBRIDE
Date Signed 6-2-08
ARIZONA U.S.A.
Expires 03/31/11

NO.	DATE	BY	REVISION DESCRIPTION

GLOBAL WATER
RELIABLE · RENEWABLE · REUSABLE
21410 N. 19th Ave. · Ste. 201 · Phoenix, AZ 85027
Ph: 623.580.9600 · Fx: 623.580.9659
www.gwresources.com

HASSAYAMPA NORTHEAST CAMPUS 1 WATER RECLAMATION FACILITY

McBride Engineering Solutions, Inc.
6100 West Gila Springs Pl., Suite 7
Chandler, AZ 85226
Phone: (480) 759-9608

SYMBOLS, LEGEND AND ABBREVIATIONS

DESIGNED: MJA/DMK
DRAWN: MG/KPB CHECKED: BPM
DATE: 05-30-08
DWG. NO. N1
SHEET 40 OF 01

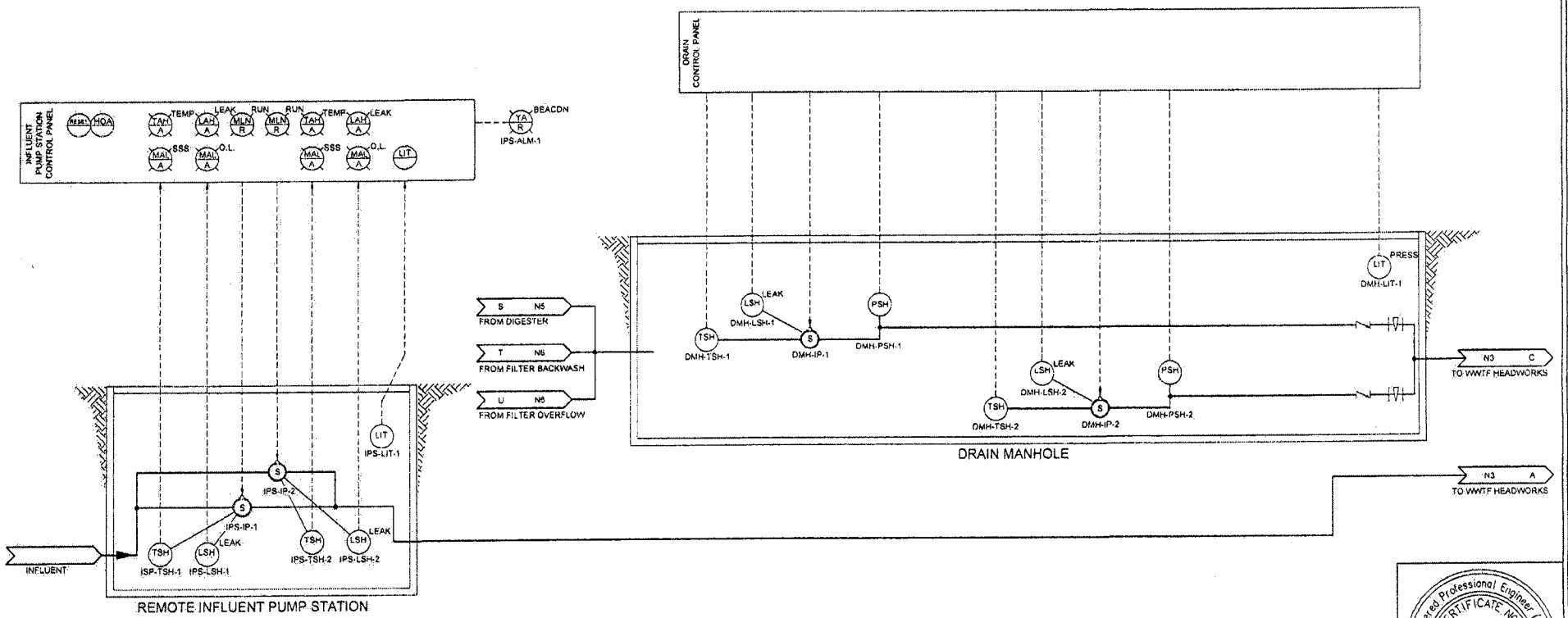

Registered Professional Engineer (Civil)
CERTIFICATE NO. 33441
BRIAN P. McBRIDE
Date Signed 6-2-08
ARIZONA U.S.A.
Expires 03/31/11

NO.	DATE	BY	REVISION DESCRIPTION

GLOBAL WATER
RELIABLE · RENEWABLE · REUSABLE
21410 N. 19th Ave. · Ste. 201 · Phoenix, AZ 85027
Ph: 623.580.9600 · Fx: 623.580.9699
www.gwresources.com

HASSAYAMPA NORTHEAST CAMPUS 1 WATER RECLAMATION FACILITY

McBride Engineering Solutions, Inc.
6100 West Gila Springs Pl., Suite 7
Chandler, AZ. 85226
Phone: (480) 759-9608

OFFSITE IPS, DRAIN MANHOLES P&ID

DESIGNED: MJA/DMK
DRAWN: MGK/PB CHECKED: BPM
DATE: 05-30-08
DWG. NO. N2
SHEET 47 OF 61

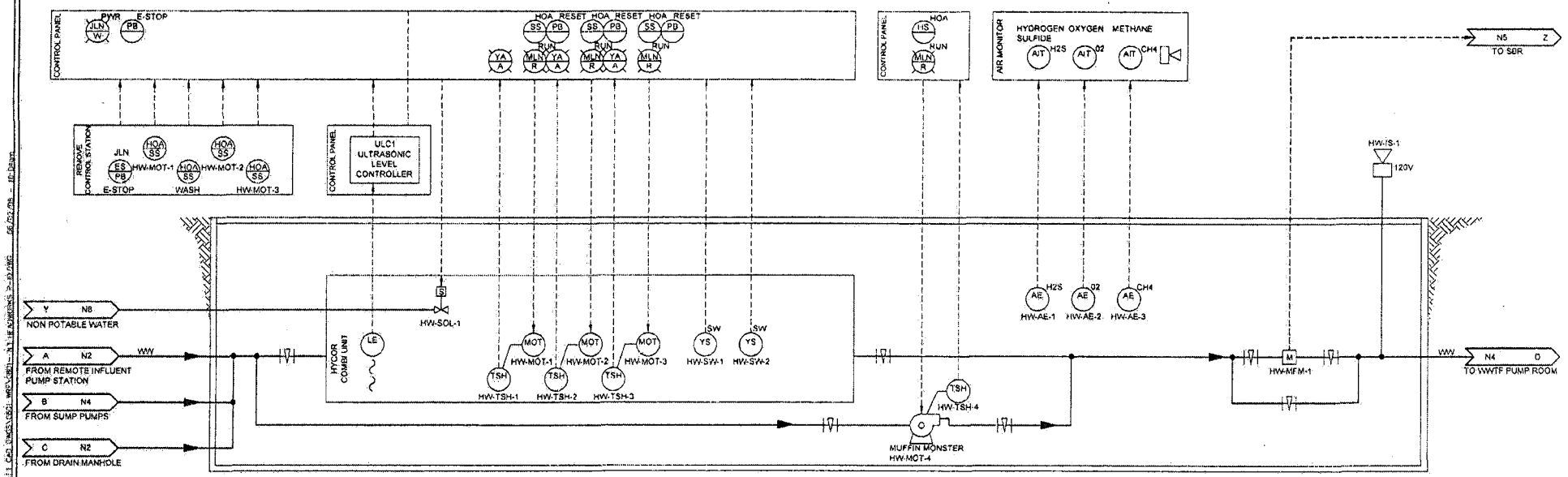

Registered Professional Engineer (Civil)
CERTIFICATE NO. 33441
BRIAN P. McBRIDE
Date Signed 6-2-09
ARIZONA U.S.A.
Expires 03/31/11

NO.	DATE	BY	REVISION DESCRIPTION

GLOBAL WATER
RELIABLE · RENEWABLE · REUSABLE
21410 N. 19th Ave. · Ste. 201 · Phoenix, AZ 85027
Ph: 623.580.9400 · Fx: 623.580.9559
www.gwresources.com

HASSAYAMPA NORTHEAST
CAMPUS 1 WATER
RECLAMATION FACILITY

McBride Engineering Solutions, Inc.
6100 West Gila Springs Pl., Suite 7
Chandler, AZ. 85226
Phone: (480) 759-9608

HEADWORKS P&ID

DESIGNED: MJA/DMK
DRAWN: MG/KPB | CHECKED: BPM
DATE: 05-30-09
DWG. NO. N3
SHEET 48 OF 61

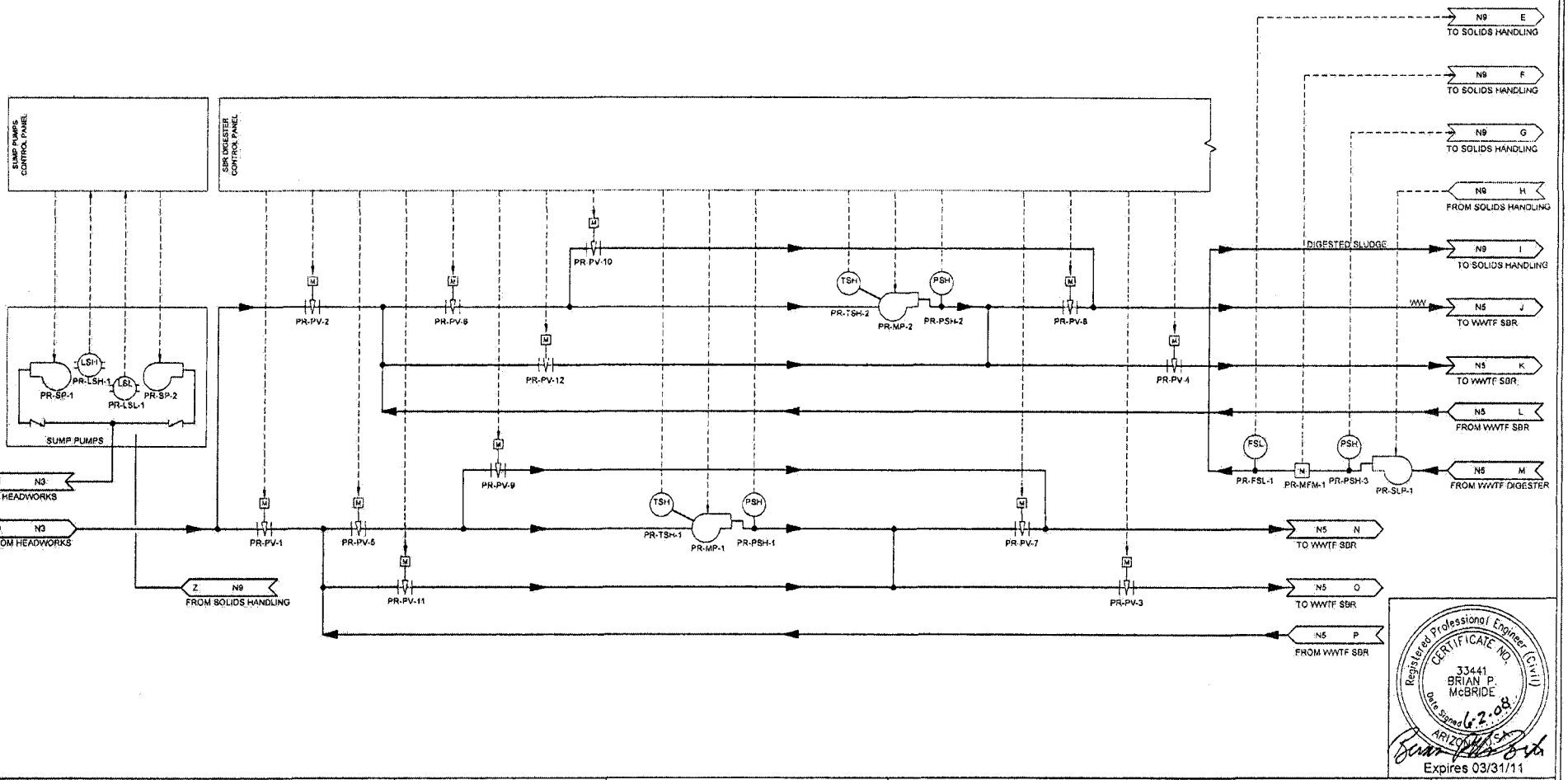

Registered Professional Engineer (Civil)
CERTIFICATE NO. 33441
BRIAN P. McBRIDE
Date Signed 6-2-08
ARIZONA, U.S.A.
Expires 03/31/11

NO	DATE	BY	REVISION DESCRIPTION

GLOBAL WATER
RELIABLE · RENEWABLE · REUSABLE
21410 N. 19th Ave. · Ste. 201 · Phoenix, AZ 85027
Ph: 623.580.9603 · Fax: 623.580.9659
www.gwresources.com

HASSAYAMPA NORTHEAST CAMPUS 1 WATER RECLAMATION FACILITY

McBride Engineering Solutions, Inc.
6100 West Gila Springs Pl., Suite 7
Chandler, AZ. 85226
Phone: (480) 759-9608

PUMP ROOM P&ID

DESIGNED: MJA/DMK
DRAWN: MQ/KPB
CHECKED: BPM
DATE: 05-30-08
DWG. NO. N4
SHEET 49 OF 61

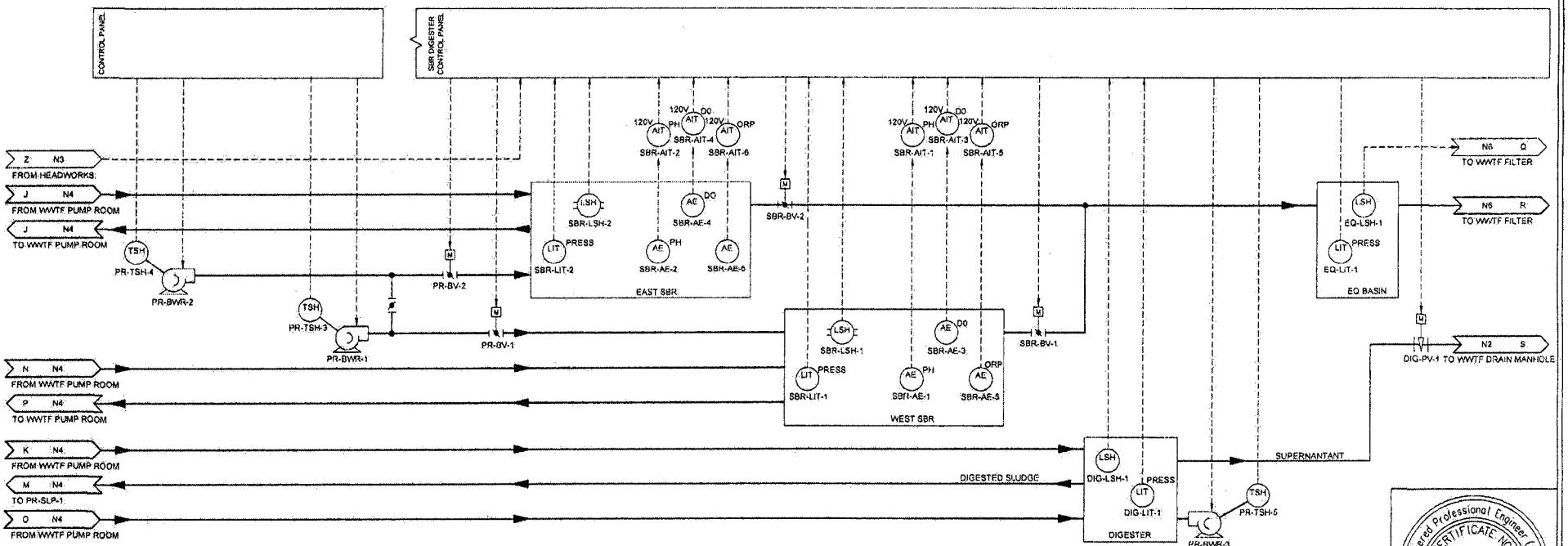

Registered Professional Engineer (Civil)
CERTIFICATE NO. 33441
BRIAN P. McBRIDE
Date Signed 6-2-08
ARIZONA U.S.A.
Expires 03/31/11

NO.	DATE	BY	REVISION DESCRIPTION

GLOBAL WATER
RELIABLE · RENEWABLE · REUSABLE
21410 N. 19th Ave. · Ste. 201 · Phoenix, AZ 85027
Ph: 623.580.9600 · Fx: 623.580.9669
www.gwresources.com

HASSAYAMPA NORTHEAST CAMPUS 1 WATER RECLAMATION FACILITY

McBride Engineering Solutions, Inc.
6100 West Gila Springs Pl., Suite 7
Chandler, AZ. 85226
Phone: (480) 759-9608

SBR, EQ BASIN DIGESTER P&ID

DESIGNED: MJA/DMK
DRAWN: MQ/KPB CHECKED: BPM
DATE: 05-30-08
DWG. NO. N5
SHEET 50 OF 61

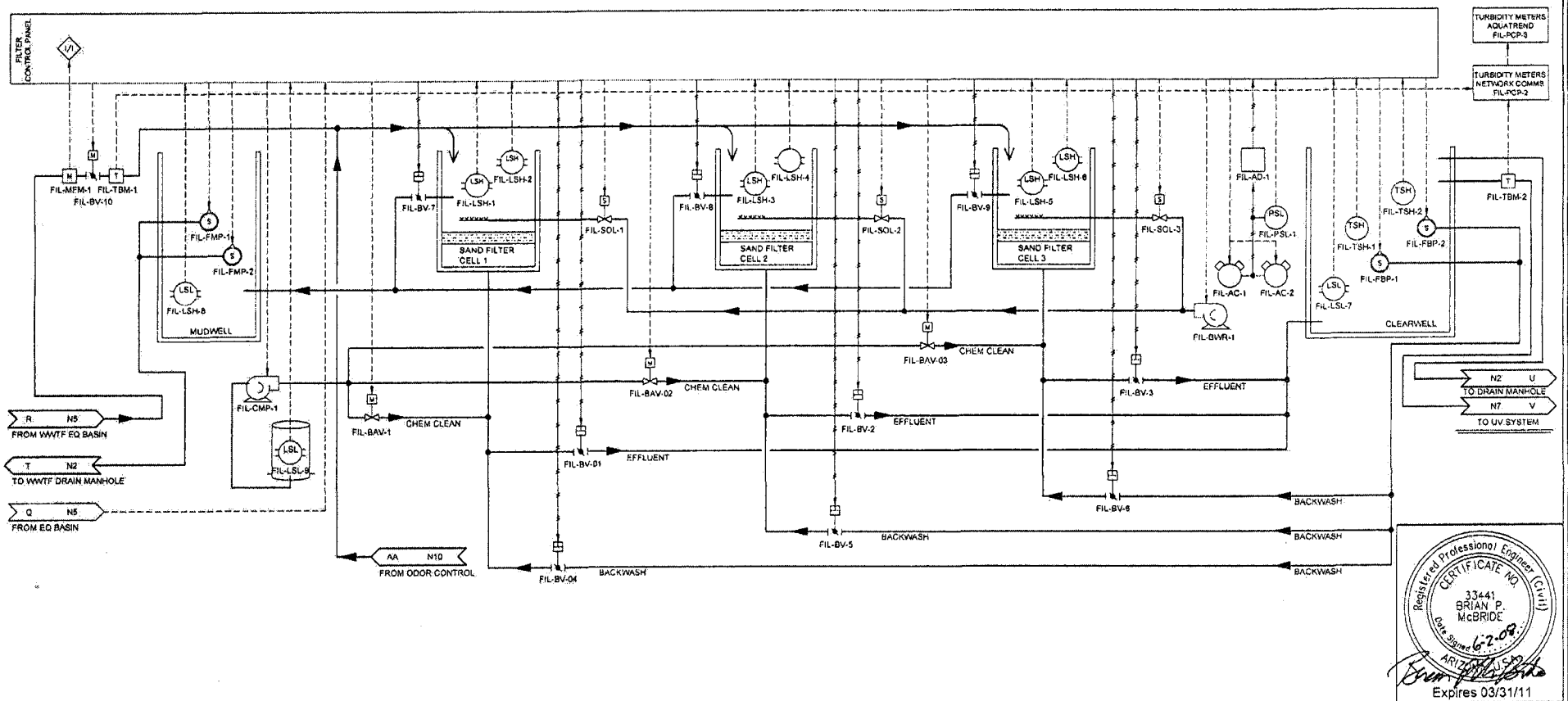

Registered Professional Engineer (Civil)
CERTIFICATE NO. 33441
BRIAN P. McBRIDE
Date Signed 6-2-08
ARIZONA, U.S.A.
Expires 03/31/11

NO.	DATE	BY	REVISION DESCRIPTION

GLOBAL WATER
RELIABLE · RENEWABLE · REUSABLE
21410 N. 19th Ave. · Ste. 201 · Phoenix, AZ 85027
Ph: 623.580.9600 · Fx: 623.580.9650
www.gwresources.com

HASSAYAMPA NORTHEAST CAMPUS 1 WATER RECLAMATION FACILITY

McBride Engineering Solutions, Inc.
6100 West Gila Springs Pl., Suite 7
Chandler, AZ. 85226
Phone: (480) 759-9608

FILTER P&ID

DESIGNED: MJA/DMK
DRAWN: MG/KPB CHECKED: BPM
DATE: 05-30-08
DWG. NO. N6
SHEET 51 OF 61

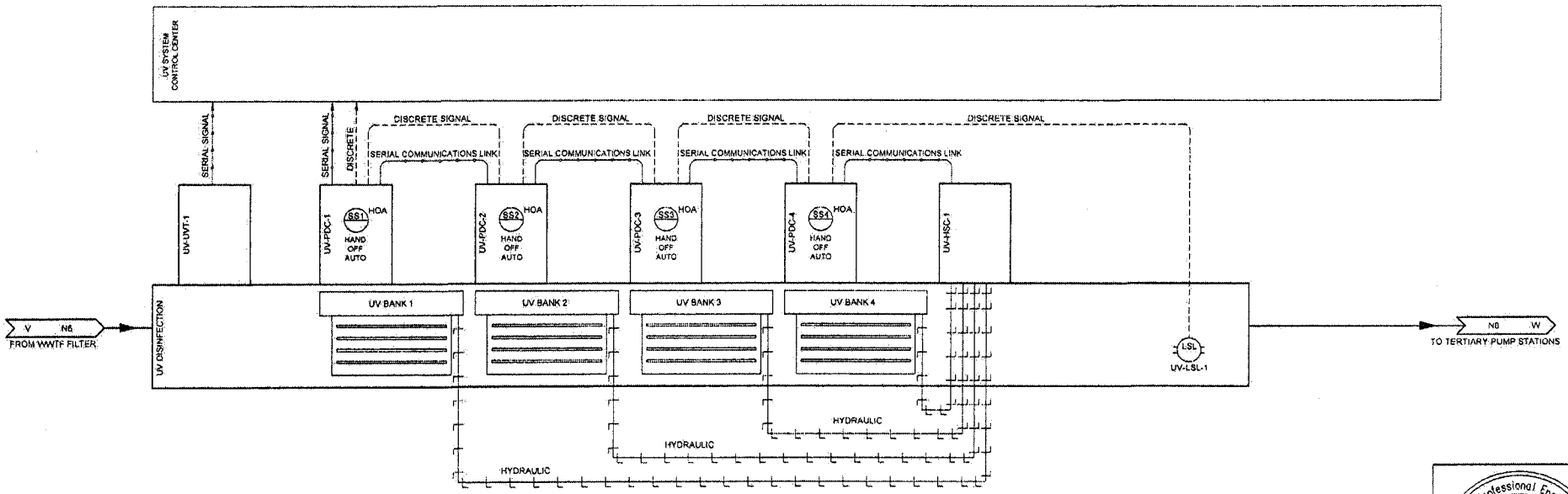

Registered Professional Engineer (Civil)
CERTIFICATE NO. 33441
BRIAN P. McBRIDE
Date Signed 6-2-08
ARIZONA, U.S.A.
Expires 03/31/11

NO.	DATE	BY	REVISION DESCRIPTION

GLOBAL WATER
RELIABLE · RENEWABLE · REUSABLE
21410 N. 19th Ave. · Ste. 201 · Phoenix, AZ 85027
Ph: 623.580.9600 · Fx: 623.580.9659
www.gwresources.com

HASSAYAMPA NORTHEAST CAMPUS 1 WATER RECLAMATION FACILITY

MES
McBride Engineering Solutions, Inc.
6100 West Gila Springs Pl., Suite 7
Chandler, AZ. 85226
Phone: (480) 759-9608

UV DISINFECTION SYS P&ID

DESIGNED: MJA/DMK
DRAWN: MG/KPB CHECKED: BPM
DATE: 05-30-08
DWG. NO. N7
SHEET 52 OF 61

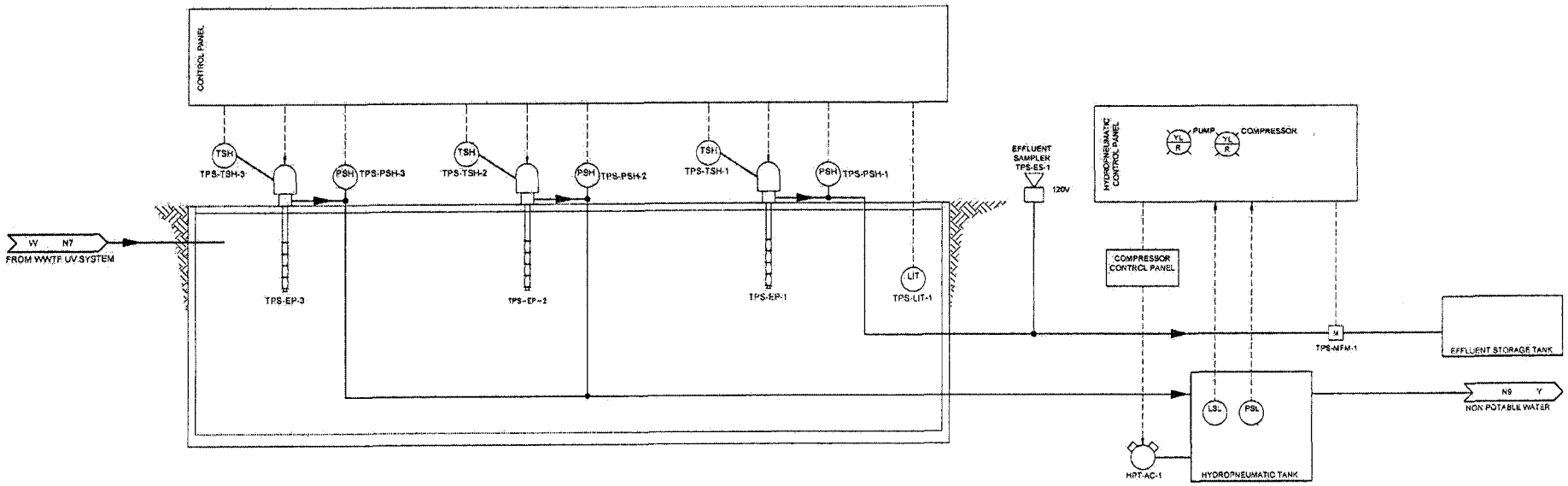

Registered Professional Engineer (Civil)
CERTIFICATE NO. 33441
BRIAN P. McBRIDE
Date Signed 6-2-09
ARIZONA, U.S.A.
Expires 03/31/11

NO.	DATE	BY	REVISION DESCRIPTION

GLOBAL WATER
RELIABLE · RENEWABLE · REUSABLE
21410 N. 19th Ave., Ste. 201 · Phoenix, AZ 85027
Ph: 623.580.9600 · Fx: 623.580.9680
www.gwresources.com

HASSAYAMPA NORTHEAST
CAMPUS 1 WATER
RECLAMATION FACILITY

McBride Engineering Solutions, Inc.
6100 West Gila Springs Pl., Suite 7
Chandler, AZ. 85226
Phone: (480) 759-9608

TERTIARY PUMP
STATION P&ID

DESIGNED: MJA/DMK
DRAWN: MGK/PB CHECKED: BPM
DATE: 06-30-08
DWG. NO.: N8
SHEET 53 OF 61

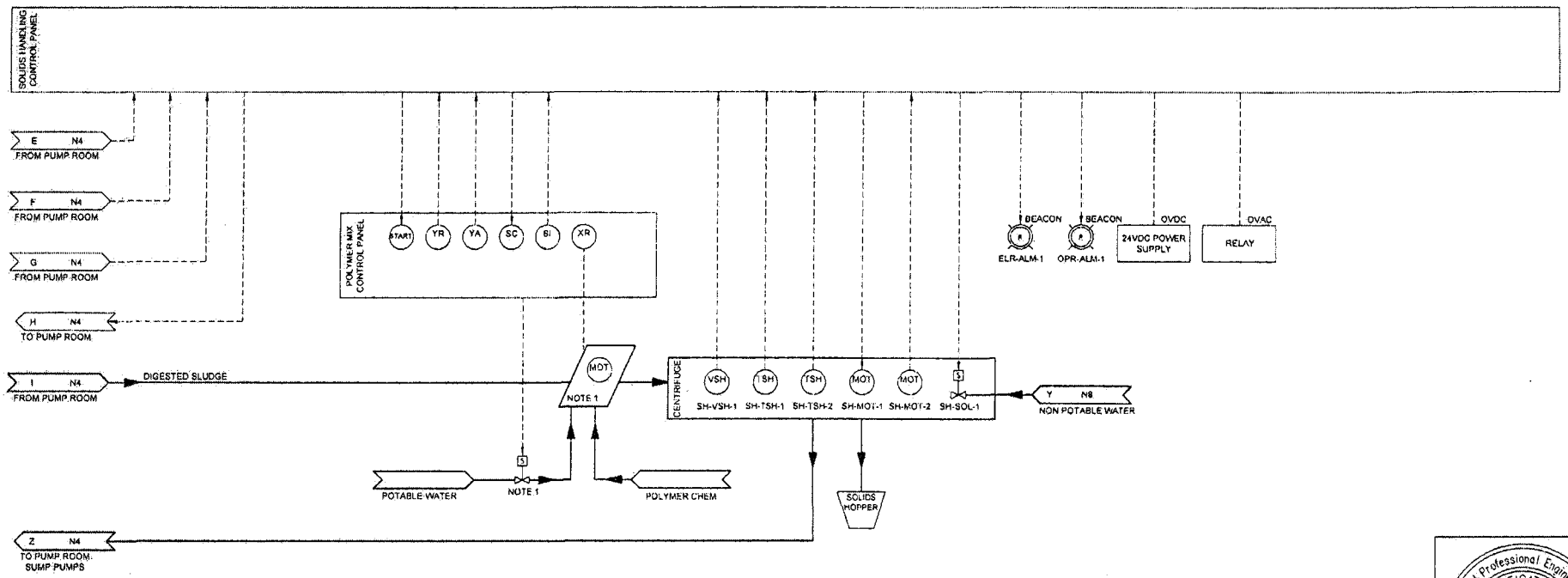

Registered Professional Engineer (Civil)
CERTIFICATE NO. 33441
BRIAN P. McBRIDE
Date Signed 6-2-08
ARIZONA U.S.A.
Expires 03/31/11

NO	DATE	BY	REVISION DESCRIPTION

GLOBAL WATER
RELIABLE · RENEWABLE · REUSABLE
21410 N. 19th Ave. · Ste. 201 · Phoenix, AZ 85027
Ph: 623.580.9600 · Fx: 623.580.9699
www.gwresources.com

HASSAYAMPA NORTHEAST
CAMPUS 1 WATER
RECLAMATION FACILITY

McBride Engineering Solutions, Inc.
6100 West Gila Springs Pl., Suite 7
Chandler, AZ. 85226
Phone: (480) 759-9608

SOLIDS HANDLING P&ID

DESIGNED: MJA/DMK
DRAWN: MG/KPB | CHECKED: BPM
DATE: 05-30-08
DWG. NO. N9
SHEET 54 OF 61

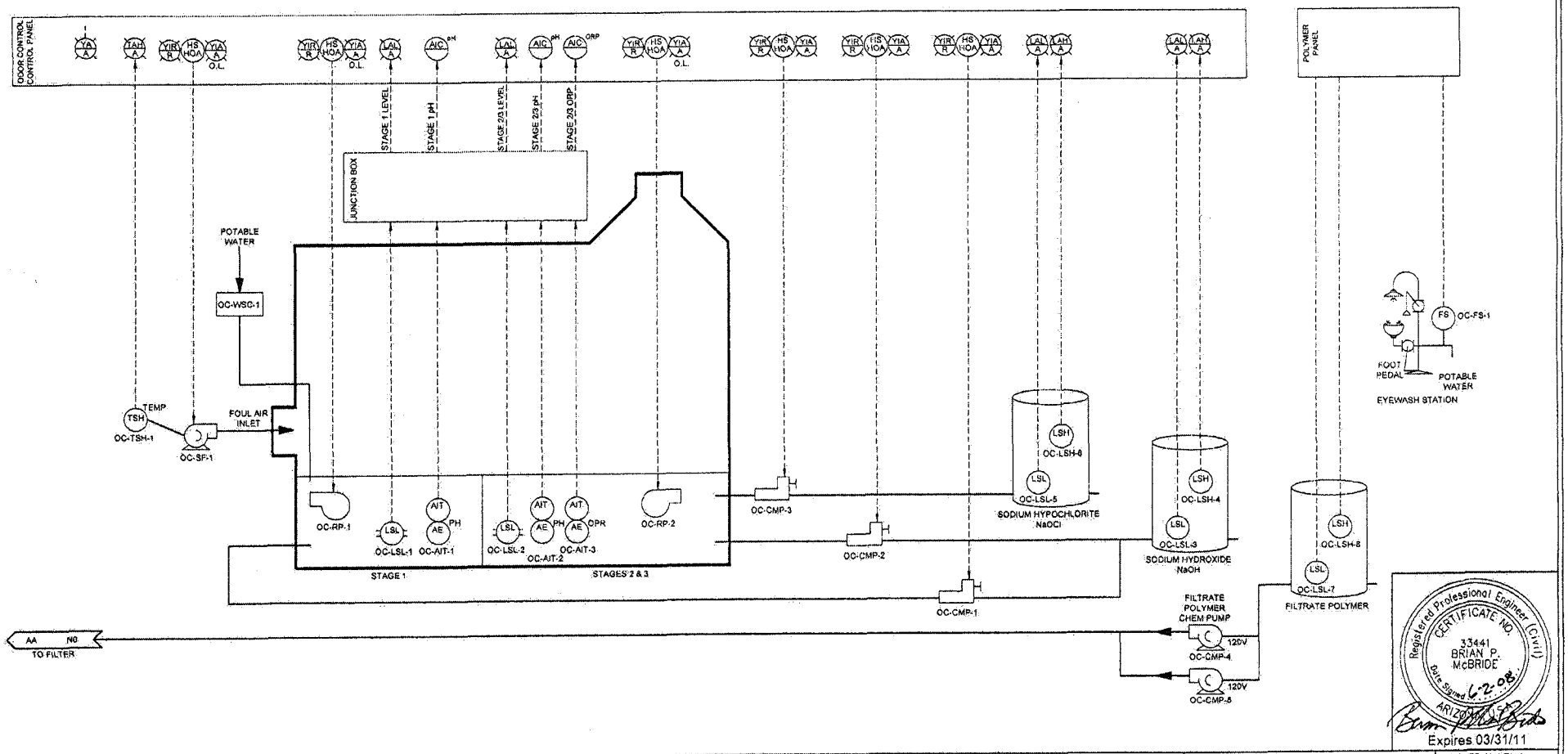

Registered Professional Engineer (Civil)
CERTIFICATE NO. 33441
BRIAN P. McBRIDE
Date Signed 6-2-08
ARIZONA
Expires 03/31/11

NO.	DATE	BY	REVISION DESCRIPTION

GLOBAL WATER
RELIABLE · RENEWABLE · REUSABLE
21410 N. 19th Ave. · Ste. 201 · Phoenix, AZ 85027
Ph: 623.580.9600 · Fx: 623.580.9659
www.gwresources.com

HASSAYAMPA NORTHEAST CAMPUS 1 WATER RECLAMATION FACILITY

McBride Engineering Solutions, Inc.
6100 West Gila Springs Pl., Suite 7
Chandler, AZ. 85226
Phone: (480) 759-9608

ODOR CONTROL P&ID

DESIGNED: MJA/DMK
DRAWN: MG/KPB CHECKED: BPM
DATE: 05-30-08
DWG. NO. N10
SHEET 55 OF 61

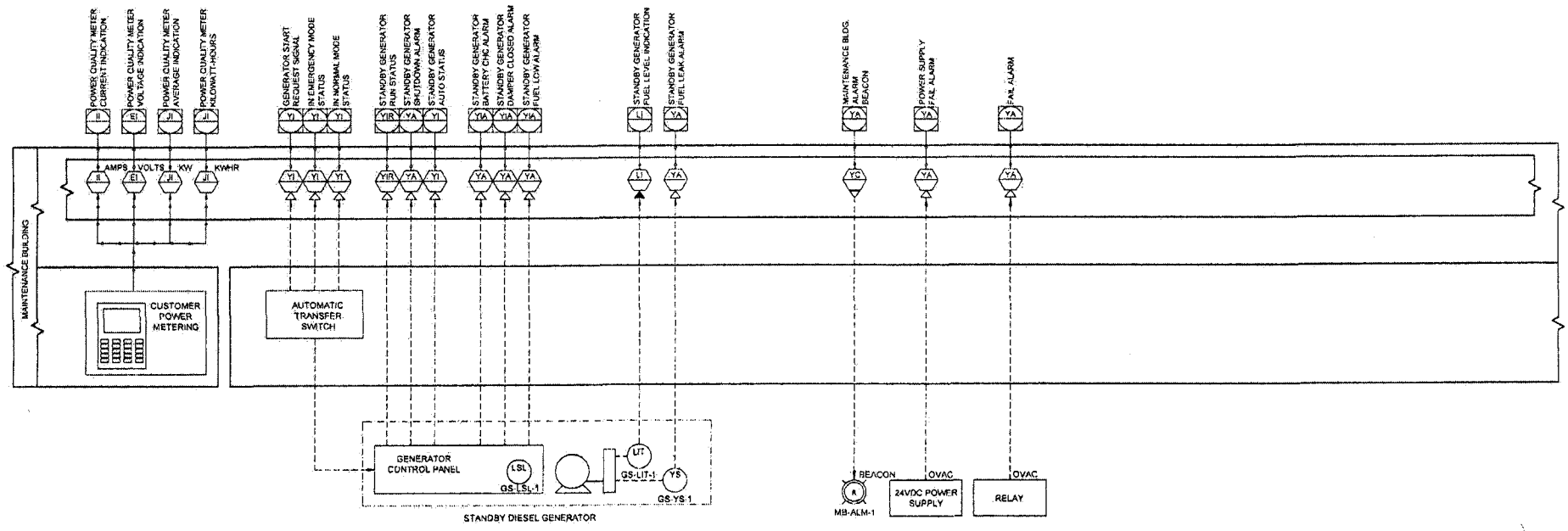

Registered Professional Engineer (Civil)
CERTIFICATE NO. 33441
BRIAN P. McBRIDE
Date Signed 6-2-08
ARIZONA U.S.A.
Expires 03/31/11

NO.	DATE	BY	REVISION DESCRIPTION

GLOBAL WATER
RELIABLE · RENEWABLE · REUSABLE
21410 N. 19th Ave. · Ste. 201 · Phoenix, AZ 85027
Ph: 623.580.9800 · Fx: 623.580.9669
www.gwresources.com

HASSAYAMPA NORTHEAST CAMPUS 1 WATER RECLAMATION FACILITY

McBride Engineering Solutions, Inc.
6100 West Gila Springs Pl., Suite 7
Chandler, AZ. 85226
Phone: (480) 759-9608

BACKUP POWER PLANT OPERATIONS P&ID

DESIGNED: MJA/DMK
DRAWN: MG/KPB CHECKED: DPM
DATE: 05-30-08
DWG. NO. N11
SHEET 60 OF 61

POWER SINGLE LINE AND SCHEMATIC DIAGRAM SYMBOLS

- CR — CONTROL RELAY
- TD — TIME DELAY RELAY
- AR — ALARM RELAY
- ETM — ELAPSED TIME METER
- M — MOTOR STARTER OR CONTACTOR COIL
- PC — PHOTO CELL
- R — BEACON/ALARM LIGHT LETTER INDICATES COLOR R=RED, A=AMBER, B=BLUE, G=GREEN
- R — PILOT LIGHT LETTER INDICATES COLOR R=RED, A=AMBER, B=BLUE, G=GREEN
- OUTPUT DV/DT FILTER
- HEATING ELEMENT
- TRANSFORMER
- CURRENT TRANSFORMER
- GROUND CONNECTION
- GENERATOR
- HORN — HORN
- 5 — FULL VOLTAGE NONREVERSING (FVNR) MOTOR STARTER OR CONTACTOR NUMBER DESIGNATES NEMA SIZE
- NORMALLY OPEN CONTACT
- NORMALLY CLOSED CONTACT
- RTU OR PLC CONTACT
- HAND AUTO XO — 2 POSITION SELECTOR SWITCH POSITION LEGEND: X=CLOSED O=OPEN
- HAND OFF AUTO XOO — 3 POSITION SELECTOR SWITCH HAND - OFF - AUTO POSITION LEGEND: X=CLOSED O=OPEN
- NORMALLY CLOSED BUTTON
- LOCKOUT STOP PUSH BUTTON
- NORMALLY OPEN PUSH BUTTON
- EMERGENCY STOP PUSH BUTTON (MAINTAINED)
- AMPS POLES — DISCONNECT SWITCH SHOWN WITH RATING AND NUMBER OF POLES
- LIMIT OR POSITION SWITCH:
- PSH — PRESSURE SWITCH HIGH
- PSL — PRESSURE SWITCH LOW
- FLOW SWITCH
- LEVEL FLOAT SWITCH
- TICTO — TIMER RELAY CONTACT INSTANTANEOUS CLOSE TIME DELAY OPEN
- NOTC — TIMER RELAY CONTACT NORMALLY OPEN TIME DELAY CLOSE
- TEMPERATURE SWITCH
- THERMAL OVERLOAD RELAY
- TERMINAL BLOCK
- DEVICE LOCATED AT REMOTE LOCATION
- CONDUIT SEALOFF
- JUNCTION BOX WITH POWER DISTRIBUTION BLOCK OR LUGS
- MMR — MOTOR MANAGEMENT RELAY
- SSS — SOLID STATE STARTER
- VFD — VARIABLE FREQUENCY DRIVE
- HF — HARMONIC FILTER
- EOL — ELECTRONIC OVERLOAD RELAY
- LTC CONNECTION
- MC CONNECTION
- HP — MOTOR, NUMBER DESIGNATES NEMA HORSEPOWER SIZE
- BOND TO METALLIC WATER PIPE
- AMPS — FUSEHOLDER OR FUSEBLOCK
- AMPS POLES — CIRCUIT BREAKER, SHOWN WITH TRIP RATING AND NUMBER OF POLES
- AMPS MCP POLES — MOTOR CIRCUIT PROTECTOR WITH TRIP RATING AND NUMBER OF POLES
- AMPS POLES — DISCONNECT SWITCH SHOWN WITH RATING AND NUMBER OF POLES
- UM — UTILITY METER
- AUTOMATIC TRANSFER SWITCH

SITE PAN SYBMOLS

- TELEPHONE OUTLET
- $ — SINGLE POLE SWITCH
- $3 — 3 WAY SWITCH
- $4 — 4-WAY SWITCH
- $M — MANUAL MOTOR STARTER
- S — SMOKE DETECTOR
- T — THERMOSTAT
- DISCONNECT SWITCH
- FIELD DEVICE
- GROUND ROD
- CONDUIT SEALOFF
- DUPLEX RECEPTACLE
- ANTENNA MAST
- M — MOTOR
- 3 — CONDUIT HOME RUN NUMBER INDICATES QUANTITY OF CONDUCTORS INCLUDING GROUND
- SPECIAL PURPOSE OR WELDING OUTLET

ELECTRICAL LINETYPES

- EXPOSED CONDUIT
- EXISTING EXPOSED CONDUIT
- UNDERGROUND CONDUIT
- EXISTING UNDERGROUND CONDUIT
- BARE COPPER GROUND CONDUCTOR
- EXISTING OR FUTURE
- NEW ELECTRICAL EQUIPMENT
- DEMOLITION
- DETAIL VIEW OR MATCHING
- CAPPED CONDUIT STUB OUT

ELECTRICAL SHEET ABBREVIATIONS

A	AMPERE
AFD	ADJUSTABLE FREQUENCY DRIVE
AFF	ABOVE FINISHED FLOOR
AI	ANALOG INPUT
AIC	AMPS INTERRUPTING CAPACITY
AO	ANALOG OUTPUT
AS	AIR SUPPLY
ATS	AUTOMATIC TRANSFER SWITCH
BC	BYPASS CONTACTOR
C	CONDUIT
CB	CIRCUIT BREAKER
CCW	COUNTER CLOCKWISE
CL2	CHLORINE
CON	CONTACTOR
CPB	CONTROL PULLBOX
CU	CPPER, BARE
CV	CONTROL VALVE
CW	CLOCKWISE
DCS	DISTRIBUTED CONTROL SYSTEM
DI	DISCRETE INPUT
DO	DISCRETE OUTPUT
DS	DISCONNECT SWITCH
DV/DT	DIFFERENTAL VOLTAGE/TIME
DWG	DRAWING
ETM	ELAPSED TIME METER
EOL	ELECTRONIC OVERLOAD
EXIST	EXISTING
FA	FOUL AIR
FC	FAIL CLOSER
FE	FLOW ELEMENT
FLA	FULL LOAD AMPS
FS	FLOW SWITCH
FVNR	FULL VOLTAGENON-REVERSING
FW	FINISHED WATER
GFCI	GROUND FAULT CIRCUIT INTERRUPTER
GFP	GROUND FAULT PROTECTION
GND	GROUND
GPD	GALLONS PER DAY
GPH	GALLONS PER HOUR
GPM	GALLONS PER MINUTE
GRS	GALVANIZED RIGID STEEL
H, HI	HIGH
H2S	HYDROGEN SULFIDE
HMI	HUMAN MACHINE INTERFACE
HOA	HAND-OFF-AUTO
HOR	HAND-OFF-REMOTE
I	CURRENT
IC	INSTRUMENTATION CABLE
ICR	INTERMITTENT CYCLE REATOR
IO	INPUT/OUTPUT
ISC	SHORT CIRCUIT CURRENT
JB	JUNCTION BOX
L, LO	LOW
LAN	LOCAL AREA NETWORK
LC	LOOP CONTROLLER
LCL	LEVEL CONTROL, LOW
LCP	LOCAL CONTROL PANEL
LOS	LOCK-OUT-STOP
LOR	LOCAL/OFF/REMOTE
LS	LEVEL (i.e. FLOAT) SWITCH
LTG	LIQUID TIGHT FLEXIBLE CONDUIT
M	MOTOR
MA	MANUAL/AUTO
mA	MILLIAMP
MAX	MAXIMUM
MC	MANUFACTURER'S CABLE
MCB	MAIN CIRCUIT BREAKER
MCC	MOTOR CONTROL CENTER
MCP	MOTOR CIRCUIT PROTECTOR
MFR(S)	MANUFACTURER(S)
MGD	MILLION GALLONS PER DAY
MGL	MILLIGRAMS PER LITER
MH	MANHOLE
MIN	MINIMUM
MOV	MOTOR OPERATED VALVE
MMR	MOTOR MANAGEMENT RELAY
MTU	MASTER TELEMETRY UNIT
NaOCL	SODIUM HYPO CHLORIDE
NaOH	SODIUM HYROXIDE
NEC	NATIONAL ELECTRICAL CODE
NECA	NATIONAL ELECTRICAL CONTRACTOR ASSOCIATION
N.C.	NORMALLY CLOSED
N.O.	NORMALLY OPEN
NOTC	NORMALLY OPENED TIMED CLOSED
NPW	NON-POTABLE WATER
NS	NITROGEN SUPPLY
NTS	NOT TO SCALE
NTU	TURBIDITY
OF	OVERFLOW
OIT	OPERATOR INTERFACE TERMINAL
OL	OVERLOAD
OLR	OVERLOAD RELAY
OO	ON/OFF (MAINTAINED)
OR	OFF-REMOTE
OSC	OPEN/STOP/CLOSE
P	PHASE
PB	PULL BOX
PCP	PROCESS CONTROL PANEL
PFR	PHASE/POWER FAILURE RELAY
PI	PULSE INPUT
PLC	PROGRAMMABLE LOGIC CONTROLLER
PLI	PLANT INFLUENT
PMP	PUMP
PNL	PANEL
PO	PULSE OUTPUT
PPB	POWER PULLBOX
PPG	POUNDS PER GALLON
PPH	POUNDS PER HOUR
PPM	PARTS PER MILLION
PR	PAIR
PRES	PRESSURE
PS	PRESSURE SWITCH
PSH	PRESSURESWITCH, HIGH
PSI	POUNDS PER SQUARE INCH
PV	PROCESS VARIABLE
RAS	RETURN ACTIVATED SLUDGE
RW	RAW WATER
RF	RADIO FREQUENCY
RIO	REMOTE INPUT OUTPUT
RS	RAW SEWAGE
RSP	RAW SEWAGE PUMP
RST	RESET
RTD	RESISTANCE TEMPERATURE DETECTOR
RTU	REMOTE TELEMETRY UNIT
RWT	REFLECTED WAVE TRAP
SBR	SEQUENCE BATCH REACTOR
SCA	SHORT CIRCUIT AMPS
SEC	SERVICE ENTRANCE EQUIPMENT
SES	SERVICE ENTRANCE SECTION
SLC	SINGLE LOOP CONTROLLER
SLOS	START-LOCK-OFF-STOP
SMC	SUBMERSIBLE MANUFACTURER CABLE
SO2	SULFUR DIOXIDE
SP	SET POINT
SPC	SPARE CONDUIT
SPR	SPARE
SS	START/STOP
SSS	SOLID STATE STARTER (SOFT START)
ST	SHUNT TRIP
TC	TELEPHONE CABLE
TS	TEMPERATURE SWITCH
TVSS	TRANSIENT VOLTAGE SURGE SUPPRESSOR
TYP	TYPICAL
UG	UNDERGROUND
V	VOLT
VFD	VARIABLE FREQUENCY DRIVE
VFD	VARIABLE FREQUENCY DRIVE
W	WATT, WIRE
WAS	WASTE ACTIVATED SLUDGE
WP	WEATHERPROOF
XFMR	TRANSFORMER
XMR	TRANSFORMER
XMTR	TRANSMITTER
ZS	POSITION (i.e. LIMIT) SWITCH

GENERAL NOTES

1. THE ELECTRICAL REQUIREMENT DRAWINGS PROVIDED HERE ARE INTENDED TO DEFINE THE SCOPE OF THE ELECTRICAL WORK AND BASIS FOR THE ELECTRICAL DESIGN. THE CONTRACTOR SHALL SUBMIT DETAILED ELECTRICAL DESIGN DRAWINGS IN COMPLIANCE WITH THESE REQUIREMENTS THAT MUST BE APPROVED PRIOR TO COMMENCING WORK ON ANY ELECTRICAL CONSTRUCTION.

2. THE COMPLETED INSTALLATION SHALL COMPLY WITH APPLICABLE FEDERAL, STATE, AND LOCAL CODES, ORDINANCES AND, REQULATIONS. THE CONTRACTOR SHALL OBTAIN NECESSARY PERMITS AND INSPECTIONS REQUIRED BY THE AUTHORITIES HAVING JURISDICTION. ALL WORK SHALL BE COMPLETED IN A NEAT, WORKMANLIKE MANNER IN ACCORDANCE WITH THE LATEST NEGA STANDARDS OF INSTALLATION UNDER COMPETENT SUPERVISION. INSTALL GROUNDING PER NEC.

3. VISIT THE SITE PRIOR TO BIDDING TO BECOME FAMILIAR WITH EXISTING CONDITIONS AND OTHER FACTORS, WHICH MAY EFFECT THE EXECUTION OF THE WORK. INCLUDE ALL RELATED COSTS IN THE INITIAL BID PROPOSAL.

4. THE CONTRACTOR SHALL COORDINATE WORK WITH THE UTILITIES PROVIDING SERVICES ON THIS PROJECT, AND SHALL COMPLY WITH ALL THEIR INSTALLATION REQUIREMENTS.

5. ALL MATERIALS SHALL BE NEW AND OF THE BEST QUALITY, MANUFACTURED IN ACCORDANCE WITH NEMA, ANSI, UL, OR OTHER APPLICABLE STANDARDS. THE USE OF MANUFACTURERS' NAMES, MODELS, AND NUMBERS IS INTENDED TO ESTABLISH STYLE, QUANTITY, APPEARANCE, USEFULNESS, AND BID PRICE.

6. PROTECT ALL ELECTRICAL MATERIAL AND EQUIPMENT INSTALLED AGAINST DAMAGE BY OTHER TRADES, WEATHER CONDITIONS, OR ANY OTHER PREVENTABLE CAUSES. EQUIPMENT DAMAGED DURING SHIPPING OR CONSTRUCTION, PRIOR TO ACCEPTANCE BY THE ENGINEER OR THE OWNER, WILL BE REJECTED AS DEFECTIVE.

7. LEAVE THE SITE CLEAN. REMOVE ALL DEBRIS, EMPTY CARTONS, TOOLS, CONDUIT, WIRE SCRAPS, AND ALL MISCELLANEOUS SPARE EQUIPMENT AND MATERIALS USED IN THE WORK DURING CONSTRUCTION. ALL COMPONENTS SHALL BE FREE OF DUST, GRIT, AND FOREIGN MATERIALS. LEFT AS NEW BEFORE FINAL ACCEPTANCE OF WORK. DAMAGED PAINT AND FINISHES SHALL BE TOUCHED UP OR REPAINTED WITH MATCHING COLOR AND FINISH.

8. UNDERGROUND CONDUITS SHALL BE SCHEDULE 40 PVC. MINIMUM CONDUIT DEPTH SHALL BE 24 INCHES. MINIMUM UNDERGROUND CONDUIT SIZE SHALL BE 1 INCH.

9. CONDUITS SHALL BE MARKED AT EACH END WITH MATCHING NUMBERED BRASS TAGS. SPARE CONDUITS SHALL HAVE A PULL STRING INSTALLED AND SECURED.

10. EXPOSED CONDUITS SHALL BE GALVANIZED RIGID STEEL (GRS). MINIMUM SIZE 3/4 INCH, UNLESS OTHERWISENOTED ON THE PLANS.

11. SAFETY SWITCHES, ELECTRICAL DISTRIBUTION EQUIPMENT, CONTROL PANELS, AND OTHER ELECTRICAL DEVICES SHALL BE UL LISTED, AND RATED FOR HEAVY DUTY SERVICE.

12. WIRING DEVICES SHALL BE SPECIFICATION GRADE.

13. THE CONTRACTOR IS RESPONSIBLE FOR MANAGING, SCHEDULING, DOCUMENTING, AND PERFORMING THE WORK SO THAT A COMPLETE ELECTRICAL, INSTRUMENTATION AND CONTROL SYSTEM FOR THE FACILITY IS PROVIDED. ACCURATE SHOP AND RECORD DRAWINGS, AND O&M MANUALS SHALL BE SUBMITTED PRIOR TO FINAL ACCEPTANCE OF THE WORK.

14. TYPICAL DETAILS SHALL APPLY IN ALL CASES, WHETHER SPECIFICALLY REFERRED TO OR NOT.

Registered Professional Engineer (Civil)
CERTIFICATE NO. 33441
BRIAN P. McBRIDE
Date Signed 6-2-08
ARIZONA U.S.A.
Expires 03/31/11

NO.	DATE	BY	REVISION DESCRIPTION

GLOBAL WATER
RELIABLE · RENEWABLE · REUSABLE
21410 N. 19th Ave. · Ste. 201 · Phoenix, AZ 85027
PH: 623.580.9600 · Fx: 623.580.9659
www.gwrsgroups.com

HASSAYAMPA NORTHEAST CAMPUS 1 WATER RECLAMATION FACILITY

McBride Engineering Solutions, Inc.
6100 West Gila Springs Pl., Suite 7
Chandler, AZ. 85226
Phone: (480) 759-9608

ELECTRICAL REQUIREMENTS

NOTE, SYMBOLS, AND ABBREVIATIONS

DESIGNED: MJA/DMK
DRAWN: MG/KPB CHECKED: BPM
DATE: 05-30-08
DWG. NO. E1
SHEET 57 OF 61

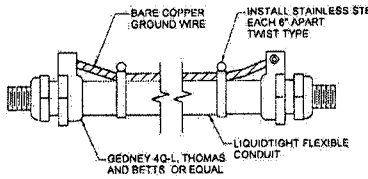

404 TYP FLEXIBLE CONDUIT GROUNDING
NOT TO SCALE

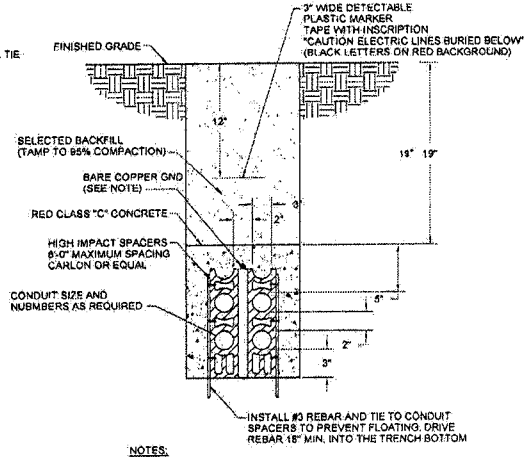

NOTES:

1. GROUND CONDUCTOR SHALL RUN CONTINUOUSLY THROUGH MANHOLES AND SHALL CONTINUE FROM DUCTBANK INTO SWITCHGEAR OR BUILDING GROUNDING SYSTEM AND SHALL BE BONDED TO EACH RIGID METAL CONDUIT. SIZE TO BE #4/0 UNLESS OTHERWISE INDICATED ON PLANS.

2. ALL DIMENSIONS ARE MINIMUM.

105 TYP DUCTBANK - CONCRETE ENCASED
NOT TO SCALE

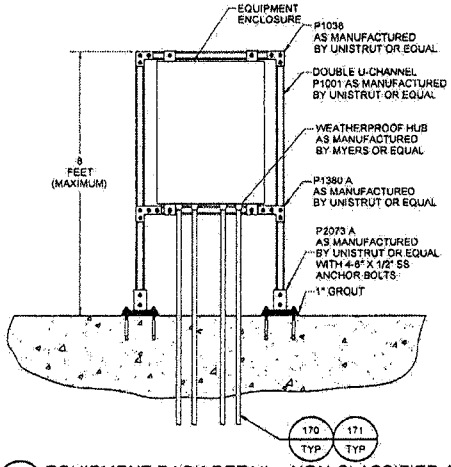

207 TYP EQUIPMENT RACK DETAIL - NON-CLASSIFIED AREAS
NOT TO SCALE

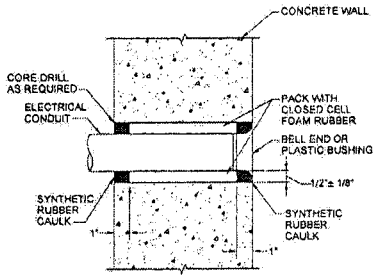

151 TYP MANHOLE PENETRATION
NOT TO SCALE

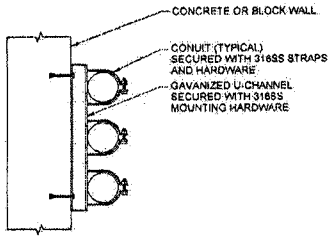

161 TYP CONDUIT ON WALL INSTALLATION DETAIL
NOT TO SCALE

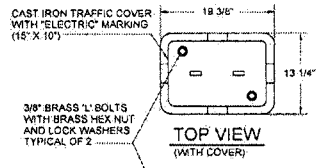

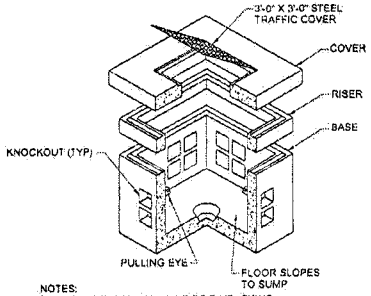

NOTES:
3'-11" X 3' X 4'-1" MINIMUM INSIDE DIMENSIONS.
INSTALL A GROUND ROD AND CONNECT TO DUCT BANK GROUND.
TRAIN CABLES AROUND INTERIOR PERIMETER ON CABLE RACKS.

333 TYP CONCRETE PULLBOX WITH HINGED COVER
NOT TO SCALE

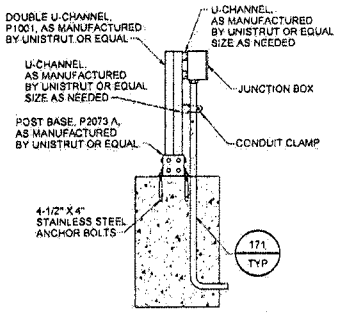

202 TYP JUNCTION BOX MOUNTING DETAIL
NOT TO SCALE

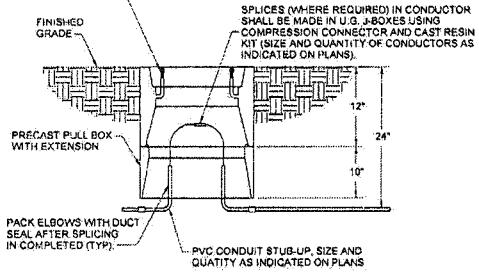

NOTE: ALL DIMENSIONS ARE MINIMUM

315 TYP UNDERGROUND CONCRETE JUNCTION BOX
NOT TO SCALE

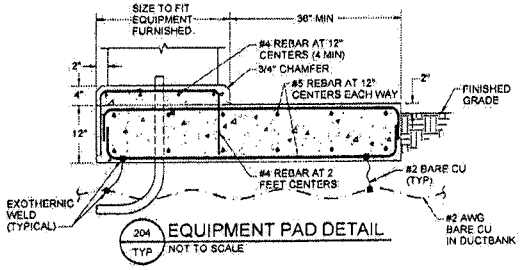

204 TYP EQUIPMENT PAD DETAIL
NOT TO SCALE

Registered Professional Engineer (Civil)
CERTIFICATE NO. 33441
BRIAN P. McBRIDE
Date Signed 6-2-08
ARIZONA U.S.A.
Expires 03/31/11

NO.	DATE	BY	REVISION DESCRIPTION

GLOBAL WATER
RELIABLE · RENEWABLE · REUSABLE
21410 N. 19th Ave. · Ste. 201 · Phoenix, AZ 85027
Ph: 623.580.9600 · Fx: 623.580.9659
www.gwresources.com

HASSAYAMPA NORTHEAST CAMPUS 1 WATER RECLAMATION FACILITY

McBride Engineering Solutions, Inc.
6100 West Gila Springs Pl., Suite 7
Chandler, AZ. 85226
Phone: (480) 759-9608

ELECTRICAL REQUIREMENTS
APPURTENANCE DETAILS

DESIGNED: MJA/DMK
DRAWN: MG/KPB CHECKED: BPM
DATE: 05-30-08
DWG. NO.: E2
SHEET 58 OF 81

DEVICE FUNCTION LEGEND:

- (50) INSTANTANEOUS OVERCURRENT
- (51) INVERSE TIME OVERCURRENT
- (51G) GROUND FAULT

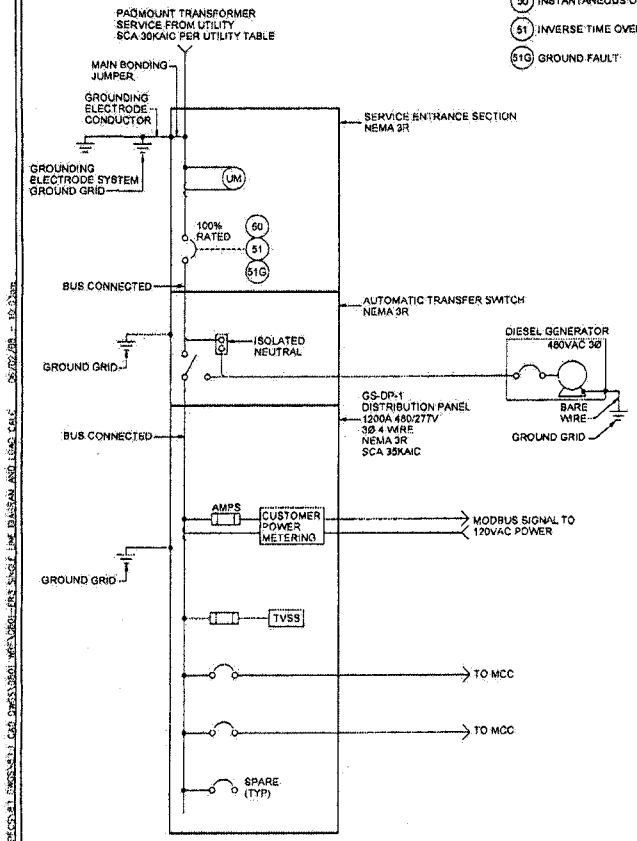

A SES, ATS & DP SINGLE LINE SCHEMATIC

NOTES:

1. LOAD PARAMETERS SHOWN ARE ESTIMATED. CONTRACTOR SHALL PROVIDE LOAD CALCULATIONS BY A REGISTERED ELECTRICAL ENGINEER PRIOR TO CONSTRUCTION.
2. ALL SHORT CIRCUIT INTERRUPTING AND PROTECTING DEVICES SHALL HAVE A SHORT CIRCUIT INTERRUPTING RATING EQUAL TO OR GREATER THAN THE AVAILABLE SHORT CIRCUIT ON THE BUS.
3. FUSES SHALL BE SIZED PER THE EQUIPMENT MANUFACTURER'S RECOMMENDATIONS.
4. A SIGN SHALL BE PLACED AT THE SERVICE ENTRANCE EQUIPMENT INDICATING TYPE AND LOCATION OF ON-SITE EMERGENCY POWER SOURCES IN ACCORDANCE WITH NEC 700-8 (a).
5. WHERE A STANDBY SOURCE GROUNDED CIRUIT CONDUCTOR IS CONNECTED TO A GROUNDING ELECTRODE CONDUCTOR REMOTE FROM THE STANDBY SOURCE, A SIGN SHALL BE PLACED AT THE GROUNDING LOCATION IDENTIFYING ALL STANDBY AND NORMAL SOURCES CONNECTED AT THAT LOCATION.
6. PROVIDE CONDUIT, TRENCHING, AND BACKFILL PER UTILITY REQUIREMENTS.

DESCRIPTION	KVA	HP	FLA
HEADWORKS			
COMBI UNIT PROCESS CONTROL PANEL	20.0		24.1
MUFFIN MONSTER PROCESS CONTROL PANEL	13.3		16.0
HEADWORKS SUPPLY FAN		.75	1.5
PUMP ROOM/SBR/DIGESTER/EQ BASIN			
PUMP ROOM SUPPLY FAN		3	5.0
MOTIVE PUMP 1		50	65.0
MOTIVE PUMP 2		50	65.0
DIGESTED SLUDGE PUMP		7.5	11.0
SUMP PUMP PROCESS CONTROL PANEL	13.3		16.0
PUMP ROOM EXHAUST FAN		.75	1.5
WEST SBR BLOWER 1		75	90.0
EAST SBR BLOWER 2		75	90.0
DIGESTER SBR BLOWER 3		60	77.0
PUMP ROOM MOTORIZED VALVES (WEST)	6.6		7.9
PUMP ROOM MOTORIZED VALVES (EAST)	6.6		7.9
SBR DECANT MOTORIZED VALVES (SOUTH)	2.5		3.0
SOLIDS HANDLING			
CENTRIFUGE PROCESS CONTROL PANEL	67.0		80.6
SOLIDS HANDLING SUPPLY FAN		.75	1.5
SBR WEST SUPPLY FAN		.75	1.5
SBR EAST SUPPLY FAN		.75	1.5
ELECTRICAL BUILDING			
NORTH TRANSFORMER	75		90.2
+25% OF LARGEST MOTOR LOAD		75	24.0
SUBTOTAL			692.2

DESCRIPTION	KVA	HP	FLA
DRAIN MANHOLE			
DRAIN MANHOLE INFLUENT PUMP 1		10	14.0
DRAIN MANHOLE INFLUENT PUMP 2		10	14.0
FILTER			
FILTER PROCESS CONTROL PANEL	50.0		60.1
UV DISINFECTION SYSTEM			
POWER DISTRIBUTION CENTER 1	6.2		7.5
POWER DISTRIBUTION CENTER 2	6.2		7.5
POWER DISTRIBUTION CENTER 3	6.2		7.5
POWER DISTRIBUTION CENTER 4	6.2		7.5
HYDRO PNEUMATIC SYSTEM			
HYDRO PNEUMATIC PROCESS CONTROL PANEL	13.3		16.0
TERTIARY PUMP STATION			
TERTIARY EFFLUENT PUMP 1		20	27.0
TERTIARY EFFLUENT PUMP 2 (HYDROTANK)		15	21.0
TERTIARY EFFLUENT PUMP 3 (HYDOTANK)		15	21.0
ODOR CONTROL			
ODOR CONTROL PROCESS CONTROL PANEL	46.5		55.9
MAINTENANCE BUILDING			
SOUTH TRANSFORMER	75		90.2
MAINTENANCE BLG SUPPLY FAN		.75	1.5
+25% OF LARGEST MOTOR LOAD		20	6.8
SUBTOTAL			357.5

SUBTOTAL			692.2
SUBTOTAL			357.5
DISTRIBUTION PANEL TOTAL AMP @ 480 3Ø			1049.7
SERVICE SIZE (AMPS)			1200

B LOAD PARAMETERS

Registered Professional Engineer (Civil) CERTIFICATE NO. 33441 BRIAN P. McBRIDE Date Signed 6-2-08 ARIZONA U.S.A.

Expires 03/31/11

NO.	DATE	BY	REVISION DESCRIPTION

GLOBAL WATER
RELIABLE · RENEWABLE · REUSABLE
21410 N. 19th Ave. · Ste. 201 · Phoenix, AZ 85027
Ph: 623.580.9600 · Fx: 623.580.9656
www.gwresources.com

HASSAYAMPA NORTHEAST CAMPUS 1 WATER RECLAMATION FACILITY

McBride Engineering Solutions, Inc.
6100 West Gila Springs Pl., Suite 7
Chandler, AZ. 85226
Phone: (480) 759-9608

ELECTRICAL REQUIREMENTS

SINGLE LINE DIAGRAM AND LOAD PARAMETERS

DESIGNED: MJ/VDMK
DRAWN: MG/KPB CHECKED: BPM
DATE: 05-30-08
DWG. NO. E3
SHEET 59 OF 61

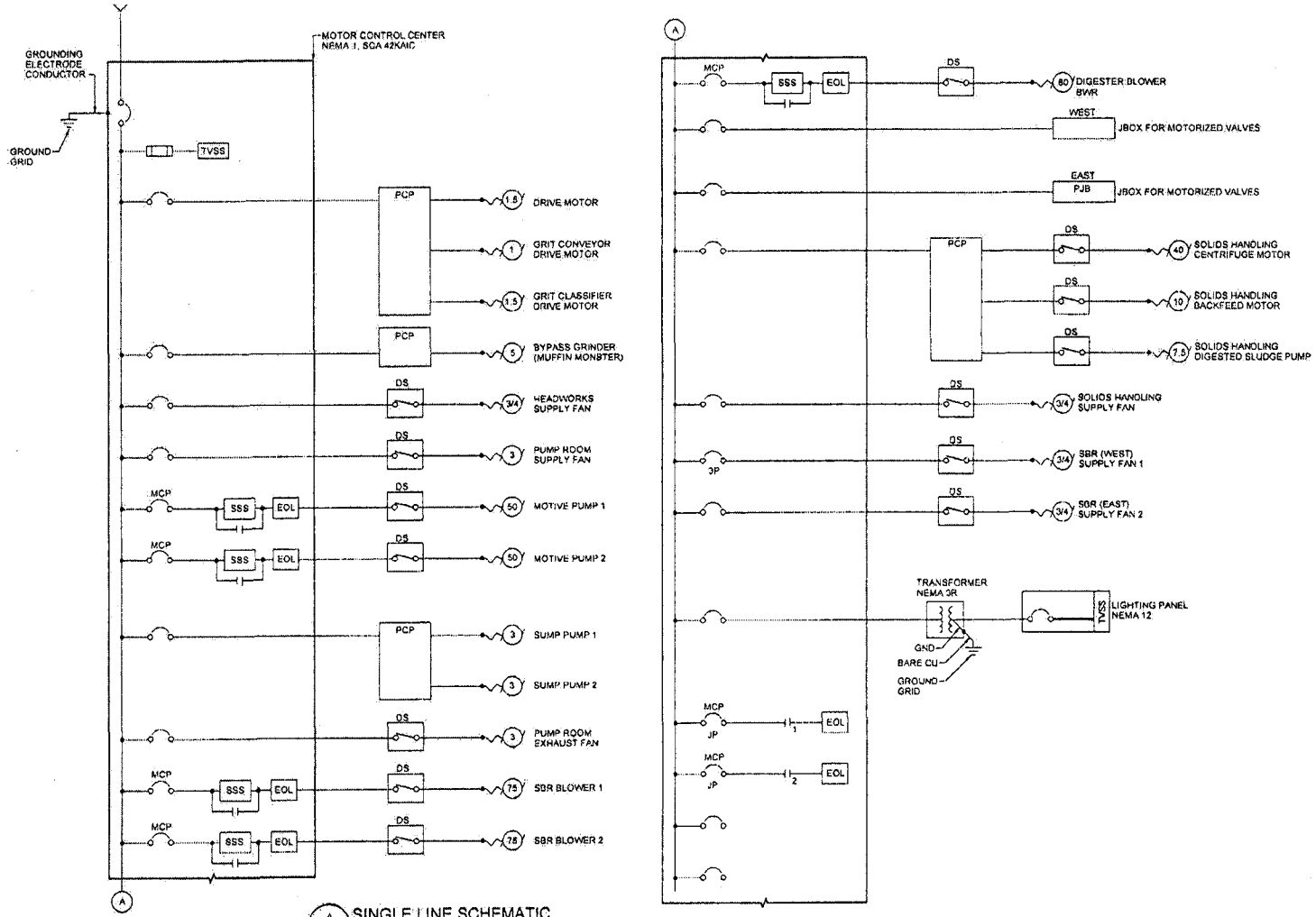

A SINGLE LINE SCHEMATIC

NOTES:

1. ALL SHORT CIRCUIT INTERRUPTING AND PROTECTING DEVICES SHALL HAVE A SHORT CIRCUIT INTERRUPTING RATING EQUAL TO OR GREATER THAN THE AVAILABLE SHORT CIRCUIT ON THE BUS.
2. FUSES SHALL BE SIZED PER THE EQUIPMENT MANUFACTURER'S RECOMMENDATIONS.
3. CONTRACTOR TO PROVIDE DETAILED CIRCUIT SCHEDULE BY A REGISTERED ELECTRICAL ENGINEER PRIOR TO CONSTRUCTION.

Registered Professional Engineer (Civil) CERTIFICATE NO. 33441 BRIAN P. McBRIDE Date Signed 6-2-08 ARIZONA U.S.A.
Expires 03/31/11

NO.	DATE	BY	REVISION DESCRIPTION

GLOBAL WATER RELIABLE · RENEWABLE · REUSABLE
21410 N. 19th Ave · Ste. 201 · Phoenix, AZ 85027
Ph: 623.580.8600 · Fx: 623.580.9659
www.gwresources.com

HASSAYAMPA NORTHEAST CAMPUS 1 WATER RECLAMATION FACILITY

McBride Engineering Solutions, Inc.
6100 West Gila Springs Pl., Suite 7
Chandler, AZ. 85226
Phone: (480) 759-9608

ELECTRICAL REQUIREMENTS

SINGLE LINE SCHEMATIC

DESIGNED: MJA/DMK
DRAWN: MG/KPB CHECKED: BPM
DATE: 05-30-08
DWG. NO. E4
SHEET 60 OF 61

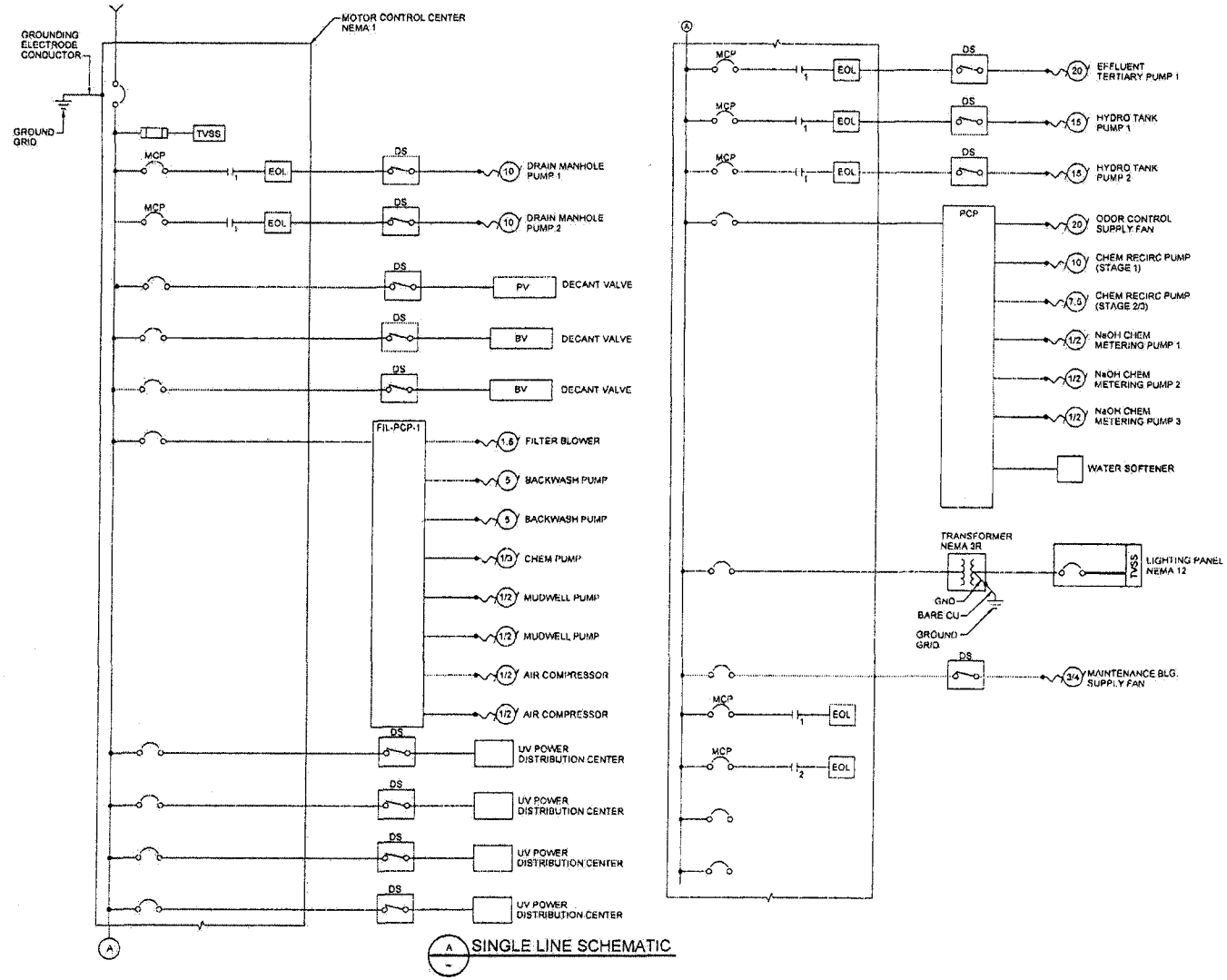

A SINGLE LINE SCHEMATIC

NOTES:

1. ALL SHORT CIRCUIT INTERRUPTING AND PROTECTING DEVICES SHALL HAVE A SHORT CIRCUIT INTERRUPTING RATING EQUAL TO OR GREATER THAN THE AVAILABLE SHORT CIRCUIT ON THE BUS.
2. FUSES SHALL BE SIZED PER THE EQUIPMENT MANUFACTURER'S RECOMMENDATIONS.
3. CONTRACTOR TO PROVIDE DETAILED CIRCUIT SCHEDULE BY A REGISTERED ELECTRICAL ENGINEER PRIOR TO CONSTRUCTION.

Registered Professional Engineer (Civil) CERTIFICATE NO. 33441 BRIAN P. McBRIDE Date Signed 6-2-08 ARIZONA U.S.A. Expires 03/31/11

NO.	DATE	BY	REVISION DESCRIPTION

GLOBAL WATER RELIABLE · RENEWABLE · REUSABLE
21410 N. 19th Ave. · Ste. 201 · Phoenix, AZ 85027
Ph: 623.580.9600 · Fx: 623.580.9608
www.gwresources.com

HASSAYAMPA NORTHEAST CAMPUS 1 WATER RECLAMATION FACILITY

McBride Engineering Solutions, Inc.
6100 West Gila Springs Pl., Suite 7
Chandler, AZ. 85226
Phone: (480) 759-9608

ELECTRICAL REQUIREMENTS

SINGLE LINE SCHEMATIC

DESIGNED: MJA/DMK
DRAWN: MG/KPB CHECKED: BPM
DATE: 05-30-08
DWG. NO. E5
SHEET 61 OF 61

3

GLOBAL WATER
RELIABLE · RENEWABLE · REUSABLE

ES

Hassayampa Utility Company, Inc.

Hassayampa Ranch Water Reclamation Facility

Design Report

June 2, 2008

McBride Engineering Solutions, Inc.
6100 W. Gila Springs Place, Suite 7, Chandler, AZ 85226
Phone: (480) 759-9608 Fax: (480) 706-1106

Hassayampa Utility Company, Inc
Hassayampa Ranch WRF
Design Report

TABLE OF CONTENTS

Page

1.0 INTRODUCTION 1-1

2.0 WASTEWATER TREATMENT CRITERIA 2-1
2.1 INFLUENT CHARACTERISTICS 2-1
2.1.1 Influent Flow Quantity 2-1
2.1.2 Flow Peaking Factors 2-1
2.1.3 Influent Wastewater Quality 2-2
2.1.4 Industrial Wastewater 2-3
2.2 TREATED WATER QUALITY CRITERIA 2-3
2.3 BIOSOLIDS 2-5

3.0 TREATMENT PROCESS DESCRIPTION 3-1

4.0 TREATMENT UNIT PROCESSES 4-1
4.1 INFLUENT PUMP STATION 4-1
4.2 PRIMARY TREATMENT 4-1
4.2.1 Screenings/Grit Removal Equipment 4-2
4.2.2 Screenings/Grit Removal Bypass Grinder 4-2
4.3 SECONDARY TREATMENT 4-2
4.3.1 Sequencing Batch Reactors 4-3
4.3.2 Post-Equalization 4-5
4.4 TERTIARY TREATMENT 4-6
4.4.1 Sand Filtration 4-6
4.4.2 UV Disinfection System 4-7
4.5 AEROBIC DIGESTION 4-8
4.6 BIOSOLIDS DEWATERING 4-9
4.7 TERTIARY PUMP STATION 4-10
4.8 DRAIN MANHOLE PUMP STATION 4-11
4.9 ODOR CONTROL 4-11
4.10 STANDBY CHEMICAL ADDITION FACILITY 4-12
4.11 STANDBY POWER 4-12

1.0 INTRODUCTION

The Hassayampa Utility Company, Inc. (HUC) Hassayampa Ranch Water Recycling Factory (HR WRF) will be located on the north side of Indian School Road, east of 339th Avenue in Maricopa County. The facility will be in the southeastern quarter of Section 22, Township 2 North and Range 5 West of the Gila and Salt River Base and Meridian. The Hassayampa Ranch service area includes approximately 2,050 acres of land, predominantly north of Indian School Road and East of 343rd Avenue.

The HUC HR WRF is planned to be constructed in three phases beginning with 0.5 million gallons per day (MGD), expanding to 1 MGD in Phase II and 3 MGD in Phase III. The size of the WRF will allow for a build out capacity of up to 10 MGD, while maintaining 350 foot setbacks, but only three phases are planned at this time.

The HUC HR WRF will be designed, constructed and operated so as to ensure the greatest degree of discharge reduction achievable. This facility will employ advanced wastewater treatment technology that includes nitrification and denitrification to produce Class A+ reclaimed water that can be directly reused for irrigation, or recharged. Discharge to the local surface water body will only take place when the volume of recycled water produced exceeds the reuse demand and the recharge capacity.

The recommended wastewater treatment processes to be employed at the HUC HR WRF will include the following:

- Influent Pump Station
- Primary Treatment
  - Screenings/Grit Removal Equipment
  - Screenings/Grit Removal Bypass Grinder
- Secondary Treatment
  - Sequencing Batch Reactors
  - Post-Equalization
- Tertiary Treatment
  - Sand Filtration
  - UV Disinfection System
- Aerobic Digestion
- Biosolids Dewatering
- Tertiary Pump Station
- Odor Control
- Chemical Addition Facility

2.0 WASTEWATER TREATMENT CRITERIA

The first step in the design of the HUC HR WRF is to determine the quantity and quality of the influent flow to be treated and the standards that the reclaimed water must meet. These factors determined the type, sizing, and characteristics of the unit process required for the facility. The wastewater treatment criteria developed as the basis for the design of the HUC HR WRF include influent wastewater quantity and quality, required treated water quality, and biosolids quality.

2.1 Influent Characteristics

The characteristics of the influent wastewater include average flow quantity, flow peaking factors and flow quality. All the influent characteristics have been based on published and accepted ranges for Phoenix, Arizona, empirical data, and MES experience.

2.1.1 Influent Flow Quantity

The HUC HR WRF is planned to be constructed in three phases to service the residential and commercial developments within the service area. Wastewater generated has been estimated based on the number of homes expected to be completed in a specific time frame, 2.5 people per dwelling, and a wastewater generation rate of approximately 140 gpcd. The equivalent wastewater generation rate per dwelling unit is approximately 350 gpd, per Maricopa County recommendation, as presented in Table 2-1 below.

Table 2-1 Wastewater Phasing Schedule

Phase	Year Completed	No. of Dwelling Units	Total Estimated Population	Treatment Capacity (MGD)
I	2009	1,425	3,560	0.5
II	2012	3,500	8,750	1.0
III	2017	10,960	27,400	3.0

The Hassayampa Ranch Service Area presented in the 208 Plan Amendment includes a large enough land area that, if fully developed into residential projects, could result in a build out flow of approximately 10 MGD. At this time, the HR WRF is being planned as a 3 MGD facility.

2.1.2 Flow Peaking Factors

The HUC HR WRF is designed with the following peaking factors listed in Table 2-2:

Table 2-2 Design Peaking Factors

Phase	Treatment Capacity (MGD)	Peak Hour Factor	Max Day Factor
I	0.5	3.0	2.0
II	1.0	2.5	2.0
III	3.0	2.0	2.0

The peak hour factor will be used in the sizing of preliminary treatment equipment and sequencing batch reactor equipment and basins. The max day factor will be used in the sizing of all equipment downstream of the post-equalization tank, including the filters and the ultraviolet disinfection.

2.1.3 Influent Wastewater Quality

The wastewater characteristics assumed for the HUC HR WRF design are presented in Table 2-2. These parameters are significantly higher than the typical values that have been previously approved by the environmental regulatory agencies. Data collected from Global Water's existing Palo Verde Utilities Company Campus 1 WRF and other existing wastewater plants serving newer developments in Arizona have been showing an increasing strength of wastewater in the last few years. Examples of recent BOD strengths include the PVUC Campus 1 WRF (300 mg/l), Cottonwood WWTP (363 mg/l), Anthem WWTP (300 mg/l), and Verrado WRF (280 mg/l). Based on this data we believe that it is prudent to raise the expected wastewater strength to levels that are in line with recent data for other new developments within Arizona. It is also recommended that once the first phase of the facility is operating the historical wastewater strengths should be tested and analyzed prior to the design of the Phase 2 expansion to verify the wastewater strength assumptions. A summary of the wastewater strengths and assumptions for this design are presented in Table 2-3.

Table 2-3 Influent Wastewater Concentrations

Contaminant	Unit	Typical Concentrations			HUC Hassayampa Ranch WRF Concentration
		Weak	Medium	Strong	
BOD_5	mg/L	110	220	400	300
TSS	mg/L	100	220	350	300

Total Nitrogen	mg/L	20	40	85	45
pH	-	6	7.5	9	6.5 - 9.0

2.1.4 Industrial Wastewater

The HUC HR WRF is not expected to receive flows that contain industrial, hazardous or mining wastewater, pesticides, PCBs, or radionuclides. The service area will include residential property and light commercial developments. HUC requires permits for all connections to the WRF. The permit review process allows a decision to be made on whether pretreatment is required before discharge to the WRF collection system. The HUC HR WRF will conduct periodic monitoring to detect industrial discharge.

2.2 Treated Water Quality Criteria

The HUC HR WRF has been designed to meet Arizona Title 18 requirements for Class A+ reclaimed water so that all water produced by the facility is available for direct reuse and recharge. Per Title 18 (R18-11-303(A)), the wastewater will undergo secondary treatment, filtration, nitrogen removal treatment, and disinfection. Table 2-4 summarizes the Class A+ water quality requirements and the design treatment criteria.

Table 2-4 Summary of Class A+ Water Quality Requirements and Design Criteria

Water Quality Parameter	Influent Concentration	Title 18 Requirements Class A+	Design Criteria
BOD_5 (mg/L)	300	NA	< 10
TSS (mg/L)	300	NA	< 10
Total Nitrogen (mg/L)	45	< 10	< 8
pH	NA	6.5 – 9.0	6.5 – 9.0
Fecal Coliform (#/100mL)	NA	None Detected	None Detected
Single Sample Maximum Fecal Coliform (#/100mL)	NA	23	<20
24-Hour Average Turbidity (NTU)[1]	NA	< 2	< 2
Maximum Turbidity (NTU)[1]	NA	5	< 5

[1]Chemical addition facilities will be available to provide coagulant addition if the 24-hour turbidity criteria are not met

2.3 Biosolids

The HUC HR WRF will generate a waste sludge that will be hauled offsite for either disposal in a permitted landfill or beneficial land application. For disposal in a permitted landfill, the sludge must not contain any free liquid as defined by Method 9095 – Paint Filter Liquids Test. The test is described in *Test Methods for Evaluating Solid Wastes, Physical/ Chemical Methods* (EPA Publication No. SW–846). In order to pass the Paint Filter Liquids Test, sludge must have a dry solids content of approximately 17-20 percent with no free water. For land application, the sludge must meet the "Class B" requirements, as described below.

The U.S. EPA 40 CFR 503 regulations, specifically 503.32(a) and (b), require biosolids intended for agricultural use to meet certain pathogen and vector attraction reduction conditions. The intent of the Class B requirements is to ensure that pathogens have been reduced to levels that are unlikely to pose a threat to public health and the environment under the specific use conditions. For Class B material that is land applied, site restrictions are imposed to minimize the potential for human and animal contact with the biosolids for a period of time following land application until environmental factors have further reduced pathogens. (No site restrictions are required with Class A biosolids.) Class B biosolids cannot be sold or given away in bags or other containers. The criteria for meeting Class B include testing to show that the biosolids have less than 2,000,000 colony-forming units per gram dry weight of total solids, or that the facility produces the biosolids through one of the following processes:

- Aerobic Digestion
- Air Drying
- Composting
- Lime Stabilization
- Equivalent Process to Significantly Reduce Pathogens (EPA-defined)

The HUC HR WRF will be designed with a full-capacity aerobic digestion process and mechanical dewatering equipment to meet the criteria for Class B biosolids.

3.0 TREATMENT PROCESS DESCRIPTION

The Hassayampa Utility Company Hassayampa Ranch Water Recycling Factory (HUC HR WRF) will be constructed to meet ADEQ BADCT guidelines. The ultimate treatment facility will be a 3-MGD sequencing batch reactor (SBR), activated sludge wastewater treatment facility that includes nitrification and denitrification, and tertiary treatment using filtration and UV disinfection. The facility will be constructed in phases. Phase I consists of a 0.5 mgd plant which will then be expanded to 1 mgd in Phase II and then to 3 mgd in Phase III. The 3-mgd module will consist of two sequencing batch reactors, a post-equalization basin, an aerobic sludge digester, tertiary filtration, UV disinfection, and mechanical solids dewatering.

Wastewater flow will be received at the influent lift station located on the treatment plant site. The influent lift station is part of the collection system and is therefore not a part of this design. A General Permit Type 4.01 will be obtained for this lift station and it will be fully enclosed and odor controlled.

Flow will be pumped from the Influent Lift Station to the Headworks where it will be passed through a screening and grit removal combination unit. The unit will use a perforated screen to remove trash and rags followed by a grit chamber, where the grit will be allowed to settle and then removed. Flow from the combination unit into the SBRs will be controlled using motor-operated inlet valves. The treatment plant will have alarms that will be connected to an automatic dialer system for failure protection. The standby generator will be sized to run the critical wastewater treatment plant units and the pump stations in the event of a power failure.

The wastewater treatment plant will be designed to meet a recycled water requirement of 10 mg/L for BOD_5 and TSS and < 8 mg/L for total nitrogen. The total detention time in the SBRs for treatment will be approximately 19 hours at average design flow utilizing one basin. A total retention time of over 37 hours will be available if both basins are utilized. All tanks will be constructed with reinforced concrete and leak tested prior to being placed into operation. Denitrification will take place under mixed anoxic conditions in the reactor after nitrification is accomplished under aerobic conditions. Anoxic conditions will be created by operating mixers without aeration. Settling will occur in the reactor prior to effluent being decanted into a post-equalization basin. Sludge will be wasted to an aerobic digester for further treatment.

Each SBR will operate 4 alternating and overlapping cycles per day (6.0 hours per cycle) followed by decanting and sludge draw:

- Anoxic Fill — Introduction of Raw Influent without Mixing or Aeration
- Aerated Fill — Mixing Only with the Introduction of Raw Influent
- Denitrification — Aeration and Mixing with the Introduction of Raw Influent
- React — Aeration and Mixing without the Introduction of Influent
- Settle — Typical Quiescent Time 45 – 60 Minutes
- Decant — Typical Decant Time < 120 Minutes
- Sludge Draw — Typical Sludge Wasting Time < 30 Minutes
- Idle — Time Varies Depending on Settle, Decant and Sludge Draw Times

The SBRs will be operated at a water depth of just under 12 feet at the start of a cycle. The maximum water depth at the end of a cycle will be 18.0 ft at average design flow for Phase I. Jet-aeration manifolds will be used for mixing and aeration in the SBRs. Dissolved oxygen levels will be controlled using D.O. sensors which will control the operation of the blowers.

Each SBR includes a solids excluding floating decanter with an automatic control valve. Supernatant will flow by gravity through the decanter to the post-equalization basin. The maximum water depth in the post-equalization basin will be just under 10 feet which will be 2 feet below the minimum water depth in the SBR to allow for the decant valve to remain fully open. Post-equalization will be used to equalize flow from the SBRs and create more uniform loading to the filters and the UV system.

Following secondary treatment, the secondary effluent will be pumped from the post-equalization basin to the tertiary filters. The automatic backwash sand filters will be sized for a maximum daily peak flow rate equal to twice the average design flow of the facility. The filters will include automatic backwash cycling with a total backwash volume equal to approximately 0.75% of the daily filtered flow rate.

The filtered effluent will flow by gravity to the UV disinfection system, which will consist of a series of UV banks installed in an open channel configuration. The UV lamps will be designed for twice the average design flow with one module on stand-by. The bulbs will be low-pressure, high intensity with variable UV output that is determined from the filtered effluent turbidity. The UV system also includes an automatic cleaning mechanism that will continuously reduce the bulb fouling and extend bulb life to 8,000 hours. Spare bulbs and sleeves will be kept on site to expedite repairs. In the event that the UV system is offline or fails catastrophically, liquid sodium hypochlorite will be added to ensure proper disinfection. Sodium bisulfite will be available for dechlorination prior to recharge or surface water discharge.

Following UV disinfection, the reclaimed water will flow by gravity to the tertiary pump station. Recycled water will be pumped to irrigation sites for direct reuse as a Class A+ reclaimed water. During winter months when reuse of all reclaimed water is not possible, it will be recharged or discharged to the Hassayampa River under an AZPDES permit.

Sludge will be stabilized to Class B level in the aerobic digester, which is designed for a hydraulic detention time of 24 days, and decanted to approximately a 2% solids concentration. Liquid sludge will be thickened to approximately 20% solids with a centrifuge and trucked to an approved landfill, or to permitted agricultural fields for land application.

4.0 TREATMENT UNIT PROCESSES

Based on the original criteria for the facility provided by Global Water – Hassayampa Utility Company, the wastewater treatment processes to be employed at the Hassayampa Ranch WRF will include the following:

- Influent Pump Station
- Primary Treatment
  - Screenings/Grit Removal Equipment
  - Screenings/Grit Removal Bypass Grinder
- Secondary Treatment
  - Sequencing Batch Reactors
  - Post-Equalization
- Tertiary Treatment
  - Sand Filtration
  - UV Disinfection System
- Aerobic Digestion
- Biosolids Dewatering
- Tertiary Pump Station
- Odor Control
- Standby Chemical Addition Facility

4.1 Influent Pump Station

In Phase I, the Influent Pump Station will be constructed as a large diameter pre-cast manhole. As Phase II and Phase III are implemented, a wet well will be constructed to accommodate the additional pumps. The influent lift station will be part of the collection system and is therefore not a part of this design. A General Permit Type 4.01 will be obtained for this lift station.

4.2 Primary Treatment

Primary treatment will consist of a combination screening/grit removal unit which works by separating the solids from the flow in a screening zone. The screened, degritted liquid will flow over a weir to the SBR's while the dewatered solids and grit will be discharged through chutes for disposal. The preliminary treatment equipment will be fully enclosed to minimize odors and will be installed within the headworks building. The entire headworks building will be odor controlled.

The preliminary treatment for Phase I will have the following components:

- Influent Combination Unit for Screenings and Grit Removal
- Bypass Grinder Unit
- Disposal Container

4.2.1 Screenings/Grit Removal Equipment

Wastewater from the influent pump station will be pumped to the combination unit where the screenings and grit will be removed. The combination unit will have the capacity to treat the peak flow for both Phases I and II. An emergency bypass line with an inline grinder will be installed in case of a failure of the combination unit. A second combination unit will need to be added for the third phase.

Screenings will be collected and disposed of through a chute to a dumpster. To minimize the volume of screenings produced, the combination unit will dewater the screenings through compression in a dewatering zone and dispose of them in the disposal container. Water removed by the washing/dewatering process will be returned to the head of the plant through a drain line which returns the flow to the influent pump station by way of the drain manhole pump station. The conceptual design parameters for the preliminary treatment system are presented in Table 4-1.

Table 4-1 Preliminary Treatment System Parameters

Parameter	Design Values (Phase I)
Number of Units	1
Screen Opening Type	Perforated Plate
Screen Opening Size (mm)	6.0
Hydraulic Capacity, each (mgd)	3.5
Firm Hydraulic Capacity (mgd)	3.5
Number of Disposal Containers	1
Estimated Screening Volume (CF/day)	6

4.2.2 Screenings/Grit Removal Bypass Grinder

An in-line grinder will be utilized in the event that a bypass of the combination unit occurs due to a failure or blockage of the unit that trips the high alarm. The grinder bypass line will feed the influent to the SBR basins under this emergency condition.

4.3 Secondary Treatment

Secondary treatment will consist of two sequencing batch reactor (SBR) basins and a post-equalization basin. Two cast-in-place SBR structures and one post-equalization basin are planned for the first phase of this facility. The secondary treatment process will be split into two parallel trains of equal capacity to allow one basin to be removed from service for maintenance, as needed. The bioreactors will be covered and odor controlled.

4.3.1 Sequencing Batch Reactors

The two SBR basins will be operated in staggered cycles that are approximately 6 hours in duration, with each cycle consisting of 5 different phases to achieve maximum yield. The first phase will be an Anoxic Fill, during which the basin will be loaded with wastewater without aeration, and the soluble BOD will be absorbed and stored by the facultative biomass until air is received to metabolize the food.

The second phase, Aerated Fill, will be initiated once approximately 75% of the fill period is completed. The blowers and pumps will be started and provide air and complete mixing to initiate the "feasting" period of the biomass. During this phase, the biomass will begin to metabolize the food it has absorbed and nitrification and denitrification will start to occur. The ammonia in the wastewater will then be converted to nitrates within the aerated plume of the basin. The nitrates will then be converted to nitrogen gas within the low dissolved oxygen areas of the basin. The denitrifying organisms will use the BOD as a food source along with the oxygen by-product from the nitrate conversion.

The third phase, Denitrification, allows for additional denitrification time. During this phase, the blowers will be turned off and the mixing pump will continue to mix, providing anoxic mixing to drive denitrification.

The fourth phase, React, will occur after the basin has completed filling, and the influent flow will be diverted to the other SBR basin. Since the influent flow will be diverted, no more food for the biomass will enter the basin forcing the organisms to scour for any remaining BOD. Aeration will continue in the full reactor until complete biodegradation is achieved; mixed liquor will then be drawn into and recycled within the motive pumps through the jet aerator. The React phase will continue until the food is consumed and the biomass starts entering a "famine" state. A True React occurs where there is no influent or primary effluent within the reactor and is essential in achieving intense famine conditions for optimum organism selection. Self cleaning D.O. probes will monitor the D.O. levels and signal the blowers and pumps accordingly.

The reactor will then enter the fifth phase, Settle, where the biomass will be allowed to settle in perfect quiescent conditions; no influent will be introduced and no secondary effluent will be decanted. Since the reactor will be under true quiescent conditions during settle, 100% of the reactor capacity will be available for separation. Once the Settle phase is completed, the secondary effluent will be decanted and sent to the post-equalization basin for further processing. The decant phase will continue until approximately the upper 1/3 of the basin is discharged.

The conceptual design parameters for the bioreactor, as calculated by the manufacturer, are summarized in Table 4-2.

Table 4-2 Bioreactor Design Parameters

Parameter	Value (Phase I)
Reactor and Process Char.	
Design MLSS (mg/L)	3,000
Hydr. Retention Time (days)	1.58
Aerobic Sludge Age (days)	8.5
System SRT (days)	17.0
Biosolids Yield Factor (per d)	0.54gVSS/gBOD
Oxic F:M (gCOD/gMLSS/d)	0.25
Syst. F:M (gCOD/gMLSS/d)	0.13
Process Parameters	
Avg. COD removed (lb/d)	2,189
Max. COD removed (lb/d)	3,440
Min. SRT – peak load (days)	7.3
Avg. biosolids yield (lb/d)	547
Avg. net sludge yield (lb/d)	1,039 (COD)
Max. sludge yield (lb/d)	1,352 (COD)
Req. aerobic mass (lb MLSS)	9,853
Req. aerobic volume (MG)	0.39
Aerated portion of cycle (%)	50.0
Req. total SBR volume (MG)	0.79
SBR Basin Design	
# of basins	2
Length (ft)	65
Width (ft)	45
TWL @ avg. flow (ft)	18.0
Total SBR volume (MG)	0.79
Total SBR retention time (hr)	37.8
Standard O_2 Req. (lbO_2/d)	3,285
Process Design	
No. batches/day/SBR	4.0
Max. Fill Time (hr)	3.0
Complete Cycle Time (hr)	6.0
Design Air Flow (SCFM)	579
Total Number of Blowers	2 (incl. spare)
Air Flow per blower (SCFM)	579
Total Number of Pumps	2
Total Pump Head (ft)	21
Flow per Pump (gpm)	2,746
Required Jet Head (ft)	17
Total Pump BHp/basin	19.2
Volume per Decant (gal)	62,500

Average Decant Flow (gpm)	2,083

4.3.2 Post-Equalization

A post-equalization basin will be constructed as part of this design. The basin will reduce flow variations to the downstream filtering and disinfection processes, thereby increasing the effectiveness of the processes and reducing the cost of the equipment required. Post-equalization will also ensure that there are not large variations in flow for the metering pumps and chlorine analyzersThe equalization process for Phase 1 is required to accommodate at least 70,000 gallons of flow storage volume. The designed basin will have a capacity of approximately 2 decant cycles. The basin will be a self-cleaning non-aerated type, with a bottom sloped towards a sump located in the corner of the basin.

Due to plant hydraulics, the post-equalization basin will also contain two submersible pumps that will pump secondary effluent to the filters. The pumps will be added during the first phase and will serve as duty and redundant units. Phase 1 Equalization Basin design parameters are summarized in Table 4-3.

Table 4-3 Post-Equalization Basin Design Parameters

Parameter	Design Values
Length (ft)	65
Width (ft)	25
Maximum Water Level (ft)	9.9
Minimum Water Level (ft)	3
Maximum Capacity (MG)	0.2
Decant Volume (MG)	0.0625
Pump Type	Submersible
Number of Pumps	2 (1 Duty/1 Standby)
Pump Capacity, each (mgd)	1
Pump Capacity, each (gpm)	695

4.4 Tertiary Treatment

Tertiary filtration follows the secondary treatment process and is required in the production of Class A+ reclaimed water. Filtration lowers the turbidity of the treated wastewater and removes solids prior to disinfection. Conventional tertiary filters, automatic backwash filters, generally include one or more layers of sand or anthracite media, and use water backwash or air scour for media cleansing.

Disinfection of the wastewater is required for the production of Class A+ reclaimed water. Currently the two most common means of disinfection for tertiary treated wastewater are chlorine disinfection followed by de-chlorination, and ultra-violet light (UV) disinfection. However, chlorination requires the use of a contact chamber that has a relatively large footprint. In addition, the use of chlorine in the quantities required for disinfection would not be consistent with the goals of the design to minimize the use of all chemicals, and the use of a chlorination/de-chlorination system as a primary disinfection choice also increases the future regulatory risk in regard to disinfection by-products. Therefore, this facility will utilize a UV disinfection system with sodium hypochlorite available in the event a failure of the UV equipment occurs.

4.4.1 Sand Filtration

The secondary effluent will be pumped from the post-equalization basin to the inlet channel of the pulsed-bed tertiary filters. A chemical injection point will be provided prior to the flow entering the filters to allow for coagulant addition to aid the filter process. The flow will enter the filter cells through proportioning weirs and cascade into the influent distribution trough and onto the filter cell sand through v-notch weirs. The flow will then be distributed evenly across the sand through the use of splash plates. As the flow reaches the surface of the filter media, the larger particles within the secondary effluent will be retained on the media surface. The finer particles enter the spaces between the sand and grains, or the interstices, and will be trapped. Over time, large particles will cover the filter media surface, thereby increasing the headloss and causing the water level to rise over the media surface.

A diffuser will be part of the pulsed-bed filter design and will use low pressure diffused air bubbles to create a gently rolling motion in the liquid over the filter surface, thereby lifting floc particles from the media surface and suspending them in the liquid. The bed will also have the ability to "pulse", or automatically regenerate the filter surface without initiating a backwash cycle. This will be achieved by closing the filtrate outlet valve, trapping atmospheric air in the underdrain. The backwash inlet valve will then be opened and the backwash pump will flood the underdrain cavity with filtered water, pushing the trapped air up through the media to the surface. This process will last about 20 seconds and dislodge particles trapped on the media surface and entrain them in the liquid above the filter surface.

An additional backwash cycle will be used for more thorough media regeneration. Once maximum headloss is achieved, the 3.5 minute backwash cycle will be initiated and stored filtrate will be pumped up through the filter media, pushing a pulse of air up through the bed. The unfiltered water will be directed out through the backwash troughs along each filter cell. The unfiltered water is then piped from the backwash troughs to the mudwell, and is then pumped to the drain manhole, and back to the head of the facility. Once the backwash cycle is completed,

the regular filtration cycle will be resumed. Because the filters will be located downstream of the post-equalization basin, they are sized for a max-day peak of twice the average daily flow instead of the larger peak-hour flow.

Table 4-4 summarizes the design values for the tertiary filtration system.

Table 4-4 Tertiary Filtration System Design Parameters

Parameter	Design Values
Type	Pulsed-Bed Sand
Type of Media	Sand
Depth of Media (in)	10
Number of Filter Cells	3
Filter Cell Length (ft)	16
Filter Cell Width (ft)	4.5
Filter Area per Cell (sf)	72
Total Filter Area (sf)	216
Average Filtration Rate (gpm/sf)	3.2
Firm Filtration Rate (gpm/sf)	4.8
Firm Flow Capacity (mgd)	1.0
Maximum Flow Capacity (mgd)	1.5
Coagulant Addition	Yes, prior to inlet channel

4.4.2 UV Disinfection System

A UV disinfection system is recommended for the HUC HR WRF. The UV system for Phase I will consist of one channel containing 4 banks of ultraviolet bulbs. Each UV bank will include a fully automated cleaning system that eliminates the need for manual sleeve cleaning. The UV system power panels will be housed in weatherproof enclosures located near the reactor units. Because the UV disinfection units will be located downstream of the post-equalization basin, they are sized for a max-day peak of twice the average daily flow. The proposed design criteria for the UV disinfection system are summarized in Table 4-5.

Table 4-5 UV Disinfection System Design Parameters

Parameter	Value (Phase I)
Influent Fecal Coliform (cfu/100 mL)	100
Influent Turbidity (NTU)	≤ 2
Effluent Fecal Coliform (cfu/100 mL)	Non-Detectable
Log Removal	>3
No. of Units	4
Flow Capacity per Unit (mgd)	0.35
Firm Flow Capacity (mgd)	1.0
Configuration Type	Parallel
Design Transmissivity (UV Transmittance %)	70

4.5 Aerobic Digestion

Aerobic Digestion will be provided to stabilize the waste activated solids (WAS). Bulletin No. 11 recommends a retention time of 16 to 18 days for stabilization and for purposes of this evaluation, a conservative estimate of 24 days retention of the Average Daily Maximum Month (ADMM) flow of solids production has been applied. The aerobic digester process equipment consists of aeration blowers, coarse air bubble diffuser grids, digested sludge pumps, and a mechanism for decanting. The supernatant will be decanted from the sludge digester and returned to the head of the plant via the drain manhole pump station. The design parameters for the digester are presented in Table 4-6.

Table 4-6 Aerobic Digester Design Parameters

Parameter	Value (Phase I)
Solids Retention Time (d)	24
Sludge Produced (based on TSS, lb/d)	873
Digester sludge concentration	2%
Digester sludge production (gpd)	5,300
No. of Digesters	1
Total Digester Volume (MG)	0.17
Percent VSS	75%
Standard Oxygen Required (lb/d)	878
Total Number of Blowers	2 (1 Duty/1 Standby)
Air Flow per Blower (SCFM)	700
Blower Discharge Pressure (psig)	9.33
BHp per Blower	41.1

4.6 Biosolids Dewatering

The HUC HR WRF will utilize a centrifuge for solids dewatering based on its ability to produce a dry cake that will pass a Paint Filter Test as required for landfill disposal. The centrifuge will be installed on a mezzanine within the solids handling, and this elevated location will facilitate removal of the cake. The dewatered sludge cake will drop down a chute into a disposal container below located near an overhead door to allow truck access and dewatered sludge cake removal.

The solids dewatering design parameters are presented in Table 4-7.

Table 4-7 Centrifuge Design Parameters

Parameter	Design Values
Type	Centrifuge
Number of Units	1
Internal Diameter (ft)	1.0
Feed Rate (gpm)	60
Sludge Feed Pump Type	Progressive Cavity
No. of Sludge Feed Pumps	2 (1 Duty/1 Standby)
Digester Sludge Production (lb/d)	873
Digester Sludge Production (gpd)	5,300
Maximum Runs per Week (days)	5
Daily Sludge Load at 5 days/week (gal)	5,300
Maximum Daily Run Time (hrs)	1.5

4.7 Tertiary Pump Station

The tertiary pump station will deliver reclaimed water to both the on-site non-potable water (NPW) system via a hydropneumatic tank and the off-site reclaimed water piping system. The tertiary pump station will be located downstream of the UV disinfection channel and will consist of a standard below-grade wetwell with three vertical turbine pumps connected through a distribution manifold. Butterfly valves will be installed between the pumps to allow one of the pumps to be used as a redundant unit for each system and to provide isolation of each pump for maintenance or replacement.

The design parameters for the Tertiary Pump Station are presented in Table 4-8.

Table 4-8 Tertiary Pump Station Design Parameters

Parameter	Design Values
Number of Pumps	3 (2 Duty/1 Standby)
Pump Type	Vertical Turbine
Pump Capacity, each (gpm)	500
Pump Capacity, firm (gpm)	1,000
Pump Capacity, firm (mgd)	1.4
Chamber Surface Area, each (ft x ft)	13 x 9
Assumed Wetwell Depth (ft)	7
Wetwell Volume (gal)	6,000

4.8 Drain Manhole Pump Station

A drain manhole pump station will be utilized at the HUC HR WRF to recycle waste flows back to the head of the facility. Throughout the treatment process, waste flows from the screening/grit combination unit, digester, filters, solids handling, and odor control will be piped to the drain manhole pump station. A force main from the drain manhole pump station returns these waste flows to the head of the facility. The drain manhole pump station will contain two submersible pumps, one for duty and one for standby. The drain manhole pump station design parameters are presented in Table 4-9.

Table 4-9 Drain Manhole Pump Station Design Parameters

Parameter	Design Values
Number of Pumps (total)	2
Pump Type	Submersible
Pump Capacity, each (gpm)	100
Pump Capacity, firm (gpm)	100
Chamber Surface Area, (ft^2)	28
Wetwell Depth (ft)	11
Wetwell Volume (gal)	2300

4.9 Odor Control

A wet scrubber system will be provided for the HUC HR WRF to provide odor control. The wet scrubber will utilize 3 stages to remove the offensive odors. In Stage 1, the process gas will be pretreated with blowdown from Stage 2/3 as well as sodium hydroxide (NaOH) to remove 70-80% of the hydrogen sulfide (H_2S). The air will

then pass through Stages 2 and 3, where an oxidation reaction will occur using NaOH and sodium hypochlorite (NaOCl) and removes the remaining H_2S.

Table 4-10 outlines the design parameters for the wet scrubber, and Table 4-11 provides details on the process treatment units, type of enclosure and method of odor control.

Table 4-10 Wet Scrubber System Design Parameters

Parameter	Value (Phase 1)
Air Flow Rate (cfm)	13,800
Average Inlet H2S Concentration (ppm)	10
Peak Inlet H2S Concentration (ppm)	20
Minimum H_2S Removal	99% or 0.5 ppm, whichever is greater

Table 4-11 Odor Control Summary

Treatment Process Unit	Odor Control	Enclosure Type
Headworks	Wet Scrubber	CMU Building
Secondary Treatment – SBR Basins	Wet Scrubber	Concrete Basins w/Metal Covers
Aerobic Digester	Wet Scrubber	Concrete Basins w/Metal Covers
Tertiary Filters	None	N/A
UV Disinfection System	None	N/A
Tertiary Pump Station	None	N/A
Solids Handling Equipment	Wet Scrubber	CMU Building

4.10 Standby Chemical Addition Facility

Standby chemical addition facilities containing filter coagulant will be provided to ensure that recycled water turbidity levels are always within the permit limits of 2/5 NTU.

4.11 Standby Power

This facility will utilize a load-shedding plan which will allow essential process equipment to operate using an 800-kW stand-by generator for the 0.5 mgd flow.

4

Maricopa County
Environmental Services Department
Water and Waste Management Division

Hassayampa Northeast Campus 1 Water Reclamation Facility
#2011645
Review Comments

General

1. MCESD notes that the design appears to be preliminary. This observation is reinforced by notes on Drawing Nos. S1 and E1 stating "the contractor shall submit detailed (structural/electrical) design drawings". In addition, the design drawings for other engineering disciplines appear to be preliminary. MCESD cannot approve a design and issue a Certificate of Approval to Construct (ATC) until it has complete design documents that it can review.

   The comments that follow refer to the design that was submitted and are not final comments.

2. MCESD notes that the same engineer has sealed the drawings of all engineering disciplines under his registration as a Civil Engineer. Provide evidence that this is permissible with regard to R4-30-301, Rules of Professional Conduct, Paragraph 18.

Design Report

3. Page 2-1: The Phase III flows are only 109 gpc/d and 274 gpdu/d. Use 140 gpc/d and 350 gpdu/d per the text above the table.

4. Page 4-1, Section 4.1 states that "the influent pump station will be part of the collection system". The pump station is the only way flow can reach the WRF and therefore it is considered to be an off-site component of the WRF. Submit the design for review as part of the WRF review.

5. Page 4-2, Section 4.3 states that the two SBR's have equal capacity and that one basin can be removed from service for maintenance. MCESD infers that the firm capacity of the WRF is therefore half the design capacity. Confirm and provide calculations, as appropriate.

6. Page 4-4, Table 4-2: Provide signed and sealed process calculations to demonstrate the results shown in this table.

7. Page 4-6, Section 4.4.1: MCESD is not familiar with pulsed-bed tertiary filters. Provide complete technical literature from the manufacturer(s).

8. Page 4-8, Table 4-5: What is the basis for assuming that the influent fecal coliform is 100 cfu/100 ml? Provide references, please.

9. Page 4-9, Section 4.8:

   a. The report must include a detailed description of the effluent reuse/disposal sites and a water balance to show that there is adequate capacity. Review of these reuse/disposal facilities must be concurrent with the review of the WRF.

   b. Not all pumps are manifolded, as shown on Dwg. P8.

10. Provide a complete list of the permits that will be required from ADEQ, ADWR, MCAQD, etc. and the status/schedule of each.

Drawings

11. A hydraulic profile and overall process schematic is needed.

12. C1:
    a. Identify the 100-year flood plain of the Hassayampa River if it extends to the site.
    b. Show the property line and the required 350-ft setback.
    c. Show the lands that are reserved for the WRF when it is expanded to its ultimate capacity of 10 MGD.
    d. There appears to be little provision for vehicle parking. Check.

13. C2: It appears that a significant amount of storm water could flow down the ramp to the solids handling area.
    a. What is the capacity of the Flygt SXV- pump in relation to the maximum storm water flow?
    b. Is there anything in the solids handling area that would be damaged by flooding (e.g. equipment, chemicals)?
    c. Sections 2/C1 & 2/C2: 2/C2 shows a major retaining wall, but 2/C1 appears to show numerous contour lines between the paving and the wall. Check.

14. C3: What is the offsite source or destination of the 8" PI, 6"PE, and 6" PW that enter/leave the site?

15. S6, Electrical Room/Operations Building Plan at El. 1102.00: Where is the door schedule, window schedule, and finish schedule?

16. S6, Solids Handling Plan at El. 1097.00, 1086.00: Does the required live load of 150 psf on the Solids Handling slab at El. 1097.00 consider the weight of the centrifuge and the vibration that it will experience? Have structural calculations been performed?

17. S9: Grating is shown over the UV channel in Section 1. MCESD typically finds a solid cover is such locations. Confirm.

18. M3: An overall mechanical layout drawing showing the top of the Main Process Structure (similar in scope/scale to Dwg. S4) is needed to show:
    a. the location/route of all surface pipelines and equipment.
    b. The location of all hatches, vents, louvers.

19. M7:
    a. It appears that there are two separate 1/2-ton cranes in the Solids Handling Area neither of which are above the centrifuge. It is not evident how the cranes will be used to remove equipment. Please explain.
    b. The hook height in Sections 1 & 2 appears inadequate. Check.
    c. Sectional Plan at El. 1097.00: Will the handrail along the edge of the slab conflict with the crane operation?

20. M16, Plan View:
    a. The chemical fill points are very close together and mistakes could be made during loading.
    b. There should be a drainage paid below the fill point that returns spills to the process. As shown, any spills would flow down the ramp and be pumped to a storm water basin.
    c. There must be a reduced pressure principle backflow preventer on the PW line to the water softener.

21. N2:
    a. MCESD considers the Remote Influent Pump Station as being part of the WRF. Submit the design for review.
    b. Describe how the RIPS operates in conjunction with the WRF.
    c. Alarms at the RIPS must be signaled to the WRF and to the duty operator if the plant isn't staffed 24/7.

22. N3: Show the screening – grit removal discharge and also the Headworks odor control connection.

23. N4, etc.: Equipment controls are all individual panels. Show how the overall system will be controlled and provide a control logic description.

24. N4:
    a. Lines "L" and "P" appear to recirculate material from the SBR back to the head of the SBR. Please explain the purpose of these apparent recirculation lines.
    b. Five pipelines are shown connected at a point to the right of PR-PV-4. Check and explain.

25. N5: The are two lines "J" on the left side of the drawing. Check and fix.

26. N6:
    a. The filtrate chemical line that originates on N10 as "AA" isn't shown here. Check and fix.
    b. What do the two compressors FIL-AC-1 & two do? The discharges aren't connected to anything.

27. N8:
    a. The Effluent Storage Tank isn't shown on the site plan. Where is it?
    b. Typically there is an air release valve on the discharge of vertical turbine pumps. Check the need.
    c. Shouldn't the hyropneumatic tank also have a LSH and PSH?

28. N9:
    a. A backflow preventer is needed on the PW line to the polymer control panel.
    b. Note 1 is indicated but not found. Check.

29. N10:
    a. A backflow preventer is needed on the PW line to the Odor Control Unit.
    b. Isn't the exhaust air intended to be used as part of the aeration process? This isn't shown.

Specifications

30. A set of signed and sealed specifications is needed.

5

MCBRIDE ENGINEERING SOLUTIONS, INC.
6100 W. Gila Springs Place, Suite 7
Chandler, AZ 85226

Principal
Brian P. McBride, P.E.

July 2, 2008

Ken James
Maricopa County Environmental Services Department
Water and Waste Management Division
1001 N. Central Avenue, Suite 150
Phoenix, Arizona 85004

Re: Hassayampa Utility Company Northeast Campus 1 WRF
MCESD No. 2011645
Review Comments dated June 30, 2008

Dear Mr. James:

We have reviewed your comments dated June 30, 2008, and have addressed the following items per your request. We have included your original comments (in italics) followed by our response (in bold).

GENERAL

1. *MCESD notes that the design appears to be preliminary. This observation is reinforced by notes on Drawings Nos. S1 and E1 stating "the contractor shall submit detailed (structural/electrical) design drawings". In addition, the design drawings for other engineering disciplines appear to be preliminary. MCESD cannot approve a design and issue a Certificate of Approval to Construct (ATC) until it has complete design documents it can review. The comments that follow refer to the design that was submitted and are not final comments.*

   The drawing set is not preliminary. However, the structural and electrical portion of the work is to be procured on a design-build basis. As stated in the submittal set, the S and E drawings provided are intended to delineate the scope of the structural and electrical requirements for the project.

2. *MCESD notes that the same engineer has sealed the drawings of all engineering disciplines under his registration as a civil engineer. Provide evidence that this is permissible with regard to R4-30-301, Rules of Professional Conduct, Paragraph 18.*

   As stated above, the structural and electrical portion of the work is to be procured on a design-build basis so the S and E drawings provided are intended only to delineate the scope of the structural and electrical requirements for the project.

DESIGN REPORT

3. *Page 2-1: The Phase III flows are only 109 gpc/d and 274 gpdu/d. Use 140 gpc/d and 350 gpdu/d per the text above the table.*

   Table 2-1 of the Design Report has been revised as requested.

4. *Page 4-1, Section 4.1 states that "the influent pump station will be part of the collection system". The pump station is the only way flow can reach the WRF and therefore it is considered to be an off-site component of the WRF. Submit the design for review as part of the WRF review.*

   The design of the influent pump station and collection system are not included in the MES scope of work for the Hassayampa Ranch (Campus 1) WRF design. According to Global Water, because the construction time for the influent pump station and collection system is considerably shorter that that of the WRF, the design schedule for the influent pump station and collection system is lagging that of the WRF and is not complete at this time. MES requests that the WRF design be reviewed for an ATC with stipulations regarding the approval of the Influent Pump Station and collection system prior to issuance of an AOC.

5. *Page 4-2, Section 4.3 states that the two SBR's have equal capacity and that one basin can be removed from service for maintenance. MCESD infers that the firm capacity of the WRF is therefore half the design capacity. Confirm and provide calculations, as appropriate.*

   The previous statement on Page 4-2 of Section 4.3 of the Design Report was meant to convey that one basin could process the full influent flow for a limited amount of time if one basin was out of service. The wording has been revised in the report for your review.

6. *Page 4-4, Table 4-2: Provide signed and sealed process calculations to demonstrate the results shown in this table.*

   Like other proprietary systems at the plant, the responsibility for the performance of the SBR system is with the manufacturer. With proprietary systems the manufacturer warrants the performance, and with the case of the SBR the manufacturer will provide a written performance guarantee to the Owner. The SBR calculations have been completed by the manufacturer and are enclosed for your review. As the engineer we can specify the design parameters and the performance requirements of the system, but we cannot dictate the design calculations without voiding the manufacturer's warranty. In addition, it is a violation of Arizona statutes for an AZ-registered P.E. to seal documents that were not produced by them or someone under their direct supervision. Therefore we cannot provide sealed versions of the SBR system design calculations.

7. *Page 4-6, Section 4.4.1: MCESD is not familiar with pulsed-bed tertiary filters. Provide complete technical literature from the manufacturer(s).*

   The requested technical information on pulsed-bed filters is enclosed for your review. Pulsed-bed filters are also known as rapid-rate gravity filters and design information is available in Engineering Bulletin No. 11 Table VII-16 on Page VII-67.

8. *Page 4-8, Table 4-5: What is the basis for assuming that the influent fecal coliform is 100 cfu/100 ml? Provide references, please.*

   The performance of the UV disinfection system is independent of the influent fecal coliform concentration. For this reason, the assumed influent fecal coliform has been deleted from Table 4-5.

9. *Page 4-9, Section 4.8:*

   a. *The report must include a detailed description of the effluent reuse/disposal sites and a water balance to show that there is adequate capacity. Review of these reuse/disposal facilities must be concurrent with the review of the WRF.*

   The Class A+ reclaimed water produced by the Campus 1 WRF is planned to be disposed of by direct reuse, recharge or discharge. While reuse is the top priority, an AZPDES Discharge Permit has been

obtained and will serve as a backup for disposal when reuse and recharge disposal options are not available. At this time, development planning has not been finalized, specific reuse disposal sites have not been determined, and a water balance has not been developed.

b. Not all pumps are manifolded as shown on Dwg. P8.

MES assumes this comment pertains to Design Report Section 4.7 Tertiary Pump Station and Drawing N8. The tertiary pump station pumps are manifolded, per Drawing M23. Drawing N8 has been revised.

10. Provide a complete list of the permits that will be required from ADEQ, ADWR, MCAQD, etc. and the status/schedule of each.

A complete list of the permits that will be required from ADEQ, ADWR, MCAQD, etc, and the status/schedule of each has been added to the Design Report as Section 5.0 for your review.

DRAWINGS

11. A hydraulic profile and overall process schematic is needed.

Please see Drawing M27.

12. C1:

a. Identify the 100-year flood plain of the Hassayampa River if it extends to the site.

b. Show the property line and the required 350-ft setback.

c. Show the lands that are reserved for the WRF when it is expanded to its ultimate capacity of 10 MGD.

d. There appears to be little provision for vehicle parking. Check.

The facility Site Plan, prepared for the Special Use Permit obtained from the Maricopa County Planning and Development Department, includes identification of the 100-year floodplain, the property line and 350-ft setback, the buildout envelope, and vehicle parking. The SUP Site Plan is enclosed for your review.

13. C2: It appears that a significant amount of storm water could flow down the ramp to the solids handling area.

a. What is the capacity of the Flygt SXV- pump in relation to the maximum storm water flow?

The 100-year, 2-hr stormwater flow for the area outside the solids handling building that contributes to the sump was calculated to be 50 gpm based on a 2.8-inch depth of stormwater. The capacity of the Flygt SX-3 pump is 50 gpm.

b. Is there anything in the solids handling area that would be damaged by flooding (e.g. equipment, chemicals)?

There is nothing in the solids handling area that would be damaged by flooding. The ground floor of the Solids Handing Building also includes a floor drain system that includes duplex pumps that would drain any flood water to the Drain Manhole Pump Station.

c. Sections 2/C1 & 2/C2: 2/C2 shows a major retaining wall, but 2/C1 appears to show numerous contour lines between the paving and the wall. Check.

The area between the retaining wall and the paving was incorrectly triangulated creating a low spot. This mistake has been corrected on Drawing C2. The grade now slopes away from the wall to the pavement to ensure effective stormwater drainage.

14. *C3: What is the offsite source or destination of the 8" PI, 6"PE, and 6" PW that enter/leave the site?*

As stated in the response to Comment 4, the influent lift station and collection system are being designed under a separate contract and on a lagging schedule to the WRF design. The plant influent, potable water influent, and the plant effluent (reclaimed water) enter or exit the site at the facility entrance along Indian School Road. The collection system and water distribution system designs will be coordinated to tie in at this location.

15. *S6, Electrical Room/Operations Building Plan at El. 1102.00: Where is the door schedule, window schedule, and finish schedule?*

The door, window, and finish schedules are the responsibility of the contractor and will be selected and implemented during the shop drawing review process.

16. *S6, Solids Handling Plan at El. 1097.00, 1086.00: Does the required live load of 150 psf on the Solids Handling slab at El. 1097.00 consider the weight of the centrifuge and the vibration that it will experience? Have structural calculations been performed?*

The final structural calculations and design are the responsibility of the contractor's structural designer and will be completed during the shop drawing review process prior to construction.

17. *S9: Grating is shown over the UV channel in Section 1. MCESD typically finds a solid cover is such locations. Confirm.*

MES has replaced the grating originally shown with checker plate and Drawings S9 and M23 have been revised accordingly.

18. *M3: An overall mechanical layout drawing showing the top of the Main Process Structure (similar in scope/scale to Dwg. S4) is needed to show:*

    a. *the location/route of all surface pipelines and equipment.*

    b. *The location of all hatches, vents, louvers.*

    Please see Drawing M18.

19. *M7:*

    a. *It appears that there are two separate 1/2-ton cranes in the Solids Handling Area neither of which are above the centrifuge. It is not evident how the cranes will be used to remove equipment. Please explain.*

    The two separate cranes have different functions in moving the centrifuge. The crane on the monorail that runs parallel to the north wall of the Solids Handling Building is required to slide the centrifuge bowl east and remove it from the housing. The second crane on the monorail that runs parallel to the west wall moves the bowl assembly to the lower level.

    b. *The hook height in Sections 1 & 2 appears inadequate. Check.*

    The hooks are retractable and their elevations can be set using hand controls.

    c. *Sectional Plan at El. 1097.00: Will the handrail along the edge of the slab conflict with the crane operation?*

The handrail along the edge of the slab is removable and therefore does not conflict with the crane operation.

20. *M16, Plan View:*

    a. *The chemical fill points are very close together and mistakes could be made during loading.*

    The chemical quick connect points will be conspicuously labeled to prevent filling mistakes.

    b. *There should be a drainage paid below the fill point that returns spills to the process. As shown, any spills would flow down the ramp and be pumped to a storm water basin.*

    The chemical quick connect points have been moved inside the Solids Handling Building. Any chemical spills will be contained inside the chemical containment area. Please see revised Drawings M16.

    c. *There must be a reduced pressure principle backflow preventer on the PW line to the water softener.*

    A reduced pressure principle backflow preventer has been added on the PW line to the water softener. Please see revised Drawing M16.

21. *N2:*

    a. *MCESD considers the Remote Influent Pump Station as being part of the WRF. Submit the design for review.*

    b. *Describe how the RIPS operates in conjunction with the WRF.*

    c. *Alarms at the RIPS must be signaled to the WRF and to the duty operator if the plant isn't staffed 24/7.*

    Please see the previous responses to Comments 4 and 14. Operation of the Influent Pump Station and the alarms required will be coordinated with the RIPS designer.

22. *N3: Show the screening – grit removal discharge and also the Headworks odor control connection.*

    The screening-grit removal discharge and the Headworks odor control connection have been added to Drawing N3.

23. *N4, etc.: Equipment controls are all individual panels. Show how the overall system will be controlled and provide a control logic description.*

    The equipment controls and the control logic description are the responsibility of the contractor's EI&C designer.

24. *N4:*

    a. *Lines "L" and "P" appear to recirculate material from the SBR back to the head of the SBR. Please explain the purpose of these apparent recirculation lines.*

    The Jet Tech SBR process incorporates a jet aeration system that operates using compressed air mixed with a motive liquid. During the React Phase of Normal Operation, mixed liquor is drawn through the sludge collection manifold by the motive pumps and used as the motive liquid. It is entrained with compressed air and injected back into the basin. Lines L and P represent the recirculated mixed liquor from each SBR used for React Phase aeration.

    b. *Five pipelines are shown connected at a point to the right of PR-PV-4. Check and explain.*

    Lines I and M are not connection to PR-PV-4. Please see revised Drawing N4.

25. *N5: The are two lines "J" on the left side of the drawing. Check and fix.*

This error has been corrected. Please see revised Drawing N5.

26. *N6:*

    a. *The filtrate chemical line that originates on N10 as "AA" isn't shown here. Check and fix.*

    The filtrate chemical line "AA N10 From Odor Control" is shown on the Filter P&ID Drawing N6 directly above the Global Water logo.

    b. *What do the two compressors FIL-AC-1 & two do? The discharges aren't connected to anything.*

    FIL-AC-1 and FIL-AC-2 are for filter analyzing.

27. *N8:*

    a. *The Effluent Storage Tank isn't shown on the site plan. Where is it?*

    The Effluent Storage Tank was deleted from the project. Drawing N8 has been revised to show the plant effluent discharging to the reclaimed water distribution system or discharge.

    b. *Typically there is an air release valve on the discharge of vertical turbine pumps. Check the need.*

    The air vacuum release valves on the vertical turbine pumps are shown on Drawing M23 and Section 2/M24. Drawings M23 and M24 have been revised to include labeling of the AVRs.

    c. *Shouldn't the hyropneumatic tank also have a LSH and PSH?*

    A LSH and PSH have been added the hydropneumatic tank and Drawing N8 has been revised accordingly.

28. *N9:*

    a. *A backflow preventer is needed on the PW line to the polymer control panel.*

    A backflow preventer has been added on the PW line to the polymer control panel. See revised Drawing N9.

    b. *Note 1 is indicated but not found. Check.*

    The Note 1 reference has been deleted. See revised Drawing N9.

29. *N10:*

    a. *A backflow preventer is needed on the PW line to the Odor Control Unit.*

    A backflow preventer has been added on the PW line to the Odor Control Unit. See Revised Drawing N10.

    b. *Isn't the exhaust air intended to be used as part of the aeration process? This isn't shown.*

    The exhaust air is not intended to be used as part of the aeration process.

SPECIFICATIONS

30. *A set of signed and sealed specifications is needed.*

    Project specifications have not been prepared. Per the intended design/build procurement, the equipment will be specified by model number and equipment selection will be finalized by shop drawing submittals.

7/7/2008

We trust that the responses provided herein will be sufficient response to all deficiencies. If you have questions or concerns, please contact me at 480-759-9608.

Sincerely,

Brian P. McBride, P.E.
Principal
McBride Engineering Solutions, Inc.

Enclosures

cc: Jason Bethke, P.E., Director of Engineering, Global Water Resources

6

HASSAYAMPA UTILITY COMPANY

GLOBAL WATER
RELIABLE • RENEWABLE • REUSABLE
TM

HASSAYAMPA NORTHEAST CAMPUS 1
WATER RECLAMATION FACILITY

MAY 2008 △1

Registered Professional Engineer (Civil)
CERTIFICATE NO.
33441
BRIAN P.
McBRIDE
Date Signed 7-3-08
ARIZONA U.S.A.
Expires 03/31/11

△1 REVISED PER MCESD REVIEW COMMENTS 6-30-08

McBride Engineering Solutions, Inc.
6100 West Gila Springs Place, Suite 7
Chandler, AZ. 85226
Phone: (480) 759-9608

SHEET NUMBER		SHEET TITLE
GENERAL		
1	G1	COVER SHEET
2	G2	SHEET INDEX
3	G3	LEGEND, VICINITY MAP, ABBREVIATIONS, GENERAL NOTES
CIVIL		
4	C1	SITE PLAN, GRADING AND PAVING
5	C2	GRADING AND PAVING DETAILS
6	C3	YARD PIPING PLAN, AND DETAILS
7	C4	YARD PIPING DETAILS
STRUCTURAL		
8	S1	GENERAL NOTES
9	S2	FILTER PLAN, ROOF PLAN, HYDROPNUEMATIC TANK
10	S3	MAIN PROCESS STRUCTURE, SECTION PLAN
11	S4	MAIN PROCESS STRUCTURE SECTIONAL TOP PLAN
12	S5	MAIN PROCESS STRUCTURE SECTIONAL PLAN
13	S6	SOLIDS HANDLING/ ELEC. ROOM/ OPERATIONS BLDG/ HEADWORK
14	S7	SECTIONS
15	S8	SECTIONS
16	S9	ULTRAVIOLET DISINFECTION AND TERTIARY PUMP STATION PLANS AND DETAILS
17	S10	ULTRAVIOLET DISINFECTION AND TERTIARY PUMP STATION PLANS AND DETAILS
18	S11	MAINTENANCE BUILDING PLANS AND SECTIONS
MECHANICAL		
19	M1	MECHANICAL LEGEND
20	M2	MAIN PROCESS STRUCTURE SECTIONAL PLAN
21	M3	MAIN PROCESS STRUCTURE SECTIONAL PLAN
22	M4	MAIN PROCESS STRUCTURE SECTIONAL PLAN, SECTION AND DETAIL
23	M5	MAIN PROCESS STRUCTURE SECTIONAL PLAN
24	M6	MAIN PROCESS STRUCTURE SECTIONAL PLAN
25	M7	MAIN PROCESS STRUCTURE SECTIONAL PLAN
26	M8	MAIN PROCESS STRUCTURE SECTIONAL PLAN
27	M9	EQUIPMENT GALLERY SECTION
28	M10	EQUIPMENT GALLERY SECTION
29	M11	OPERATIONS AND HEADWORKS ROOF PLAN EQUIPMENT GALLERY SECTION
30	M12	DIGESTER SECTIONAL PLAN AND SECTIONS
31	M13	EQUALIZATION BASIN SECTIONAL PLAN AND SECTION
32	M14	SEQUENCING BATCH REACTORS SECTIONAL PLAN AND SECTIONS
33	M15	SEQUENCING BATCH REACTORS SECTIONAL PLAN AND SECTIONS
34	M16	CHEMICAL STORAGE AND ODOR CONTROL PLAN AND SECTION
35	M17	CHEMICAL STORAGE AND ODOR CONTROL PLAN AND SECTION
36	M18	MAIN PROCESS STRUCTURE SECTIONAL PLAN

SHEET NUMBER		SHEET TITLE
MECHANICAL (cont.)		
37	M19	EAST EQUIPMENT GALLERY PLAN, HEADWORKS PLAN, OPERATIONS BUILDING PLAN
38	M20	EAST EQUIPMENT GALLERY SECTIONS, HEADWORKS SECTIONS
39	M21	FILTER PLAN, SECTIONS AND DETAILS
40	M22	FILTER PLAN, SECTIONS AND DETAILS
41	M23	ULTRAVIOLET DISINFECTION AND TERTIARY PUMP STATION PLANS AND DETAILS
42	M24	ULTRAVIOLET DISINFECTION AND TERTIARY PUMP STATION PLANS AND DETAILS
43	M25	DETAILS
44	M26	DETAILS
45	M27	HYDRAULIC PROFILE MASS BALANCE DIAGRAM
INSTRUMENTATION		
46	N1	SYMBOLS, LEGEND, ABBREVIATIONS
47	N2	OFFSITE IPS, DRAIN MANHOLES P&ID
48	N3	HEADWORKS P&ID
49	N4	PUMP ROOM P&ID
50	N5	SBR, EQ BASIN DIGESTER P&ID
51	N6	FILTER P&ID
52	N7	UV DISINFECTION SYS P&ID
53	N8	TERTIARY PUMP STATION P&ID
54	N9	SOLIDS HANDLING P&ID
55	N10	ODOR CONTROL P&ID
56	N11	BACKUP POWER PLANT OPERATIONS P&ID
ELECTRICAL		
57	E1	NOTES, SYMBOLS, AND ABBREVIATIONS
58	E2	APPURTENANCE DETAILS
59	E3	SINGLE LINE DIAGRAM, AND LOAD PARAMETERS
60	E4	SINGLE LINE SCHEMATIC
61	E5	SINGLE LINE SCHEMATIC

Registered Professional Engineer (Civil)
CERTIFICATE NO. 33441
BRIAN P. McBRIDE
Date Signed 6-2-08
ARIZONA U.S.A.
Expires 03/31/11

NO.	DATE	BY	REVISION DESCRIPTION

GLOBAL WATER
RELIABLE • RENEWABLE • REUSABLE
21410 N. 19th Ave. • Ste. 201 • Phoenix, AZ 85027
Ph: 623.580.0600 • Fx: 623.580.0669
www.gwresources.com

HASSAYAMPA NORTHEAST CAMPUS 1 WATER RECLAMATION FACILITY

McBride Engineering Solutions, Inc.
6100 West Gila Springs Pl., Suite 7
Chandler, AZ. 85226
Phone: (480) 759-9608

SHEET INDEX

DESIGNED: MJA/DMK
DRAWN: MG/KPB CHECKED: BPM
DATE: 05-30-08
DWG. NO. G2
SHEET 2 OF 61

U:\D-PROJECTS\0901-Dwr-HASSAYAMPA NORTH\DWGS & SPECS\SHEETS\ CAD DWGS\0901 NHF\0901-G2 SHEET INDEX.DWG 05/02/08 - 07:34am

SECTION - DETAIL IDENTIFICATION

SECTION CALL OUT	SECTION ID LETTER — SECTION X/XX — DRAWING NUMBER DETAIL IS LOCATED
DETAIL CALL OUT	DETAIL ID LETTER — DETAIL XX/XX — DRAWING NUMBER DETAIL IS LOCATED
SECTION CUT	PLAN ID LETTER — X/XX — X/XX — DRAWING NUMBER DETAIL IS LOCATED

DISCIPLINE DESIGNATIONS

G	- GENERAL	H	- HVAC
C	- CIVIL	P	- PLUMBING
S	- STRUCTURAL	N	- INSTRUMENTATION
M	- MECHANICAL	E	- ELECTRICAL

GENERAL NOTES FOR CONSTRUCTION

1. PROTECT ALL EXISTING SURFACE IMPROVEMENTS AND BURIED UTILITIES WHICH ARE TO REMAIN IN PLACE. REPAIR OR REPLACE ANY SUCH UTILITIES/IMPROVEMENTS DAMAGED IN THE COURSE OF THE WORK TO THE SATISFACTION OF THE OWNER/UTILITY.

2. HORIZONTAL COORDINATE LOCATIONS CITED ON THESE PLANS REFER TO THE TABLE MOUNTAIN WWTP COORDINATE SYSTEM. ON-SITE BENCHMARKS AND THEIR COORDINATE LOCATIONS ARE SHOWN ON DRAWING G2.

3. ACTUAL ELEVATION OF EXISTING TOPOGRAPHY AERIALLY MAPPED FOR THIS PROJECT MAY VARY FROM THAT SHOWN. GRADE TOLERANCE IS ± 2 FEET.

4. EXISTING SITE UTILITIES AND SURFACE FEATURES SHOWN ON THE DRAWINGS ARE ONLY FOR THE CONTRACTOR'S CONVENIENCE. THEY ARE BASED ON BEST AVAILABLE INFORMATION BUT ARE NOT WARRANTED BY THE ENGINEER NOR BY THE OWNER. BEFORE TRENCHING, FIELD VERIFY LOCATIONS AND ELEVATIONS OF ALL CRITICAL FEATURES WHICH MAY AFFECT THE WORK. IMMEDIATELY INFORM THE ENGINEER OF ANY SIGNIFICANT DISCREPANCIES.

5. SUBSURFACE EXPLORATION WAS PERFORMED BY TECHNICON ENGINEERING SERVICES, INC. SEE GEOTECHNICAL ENGINEERING REPORTS FOR BORING LOCATION AND SUBSURFACE INFORMATION.

6. SECURE ALL PERMITS REQUIRED FOR THE CONSTRUCTION OF THIS PROJECT.

7. CONFINE ON-SITE CONSTRUCTION ACTIVITIES WITHIN LIMITS OF CONSTRUCTION AS SHOWN ON DWG G2 UNLESS NOTED OTHERWISE.

8. UNLESS DETAILED, SPECIFIED OR INDICATED OTHERWISE, CONSTRUCT THE WORK IN ACCORDANCE WITH THE APPLICABLE DETAILS OF THE COUNTY OF MARICOPA IMPROVEMENTS AND AMENDMENTS AND IN COMPLIANCE WITH THE ORDINANCES AND SPECIFICATIONS OF THE COUNTY OF MARICOPA.

9. TYPICAL DETAILS APPLY EVEN THOUGH NOT REFERENCED AT SPECIFIC LOCATIONS OR IN SPECIFIC DRAWINGS.

10. (*) INDICATES DIMENSION TO BE DETERMINED BY THE CONTRACTOR BASED UPON EQUIPMENT MANUFACTURER SELECTED.

11. (**) INDICATES DIMENSION TO BE FIELD VERIFIED BY THE CONTRACTOR.

12. CONFINE CONSTRUCTION TRAILERS, MATERIAL AND EQUIPMENT STORAGE TO THE CONTRACTOR'S STAGING AREAS INDICATED ON THE OVERALL SITE PLAN, DWG G1. ANY ADDITIONAL STAGING AREA REQUIRED BY THE CONTRACTOR MUST BE APPROVED BY THE OWNER. RESTORE ALL STAGING AREAS NOT MODIFIED BY THE DESIGN TO PRECONSTRUCTION CONDITION PRIOR TO THE COMPLETION OF THE PROJECT.

13. PROVIDE MEASURES FOR TEMPORARY EROSION AND SEDIMENT CONTROL.

14. WHERE NOT OTHERWISE SHOWN OR SPECIFIED PROVIDE ALL PIPING AND UTILITIES INSTALLED BELOW GRADE WITH A MINIMUM 4'-0" COVER.

15. FIELD VERIFY PROPOSED ALIGNMENT OF NEW PIPING TO AVOID CONFLICTS WITH EXISTING UTILITIES.

16. NOTIFY UTILITIES AT LEAST 48 HOURS IN ADVANCE OF ANY EXCAVATION, DISCONNECTION, CONNECTION, OR REMOVAL OF ANY PIPE OR CONDUIT UNDER THEIR AUTHORITY. VERIFY LOCATIONS OF ALL UTILITIES AND AVOID DAMAGE TO SAME.

17. COORDINATE AND SCHEDULE ANY WORK THAT MAY IMPAIR, INTERRUPT OR OTHERWISE AFFECT ON-GOING TREATMENT PLANT PROCESSES AND OPERATIONS WITH THE OWNER A MINIMUM OF SEVEN DAYS IN ADVANCE OF WORK.

18. ALL ELEVATIONS SHOWN REFER TO NGVD (NATIONAL GEODETIC VERICAL DATUM) 1988 ELEVATIONS INDICATED ON THESE PLANS AS <10000 ARE BASD ON NGVD MINUS 800'. THUS AN ELEVATION CITED AS 78.25 SHOULD BE INTERPTED AS 878.25 NGVD.

19. CONTRACTOR IS ADVISED THAT SOME WORK SPECIFIED MAY REQUIRE WORKING IN CONFINED SPACES. COMPLY WITH "CONFINED SPACES" REQUIREMENTS AND PROVIDE SAFETY APPARATUS FOR ALL PERSONS ENTERING THE SPACE.

20. PORTIONS OF THE WORK ARE PERFORMED WITHIN OR IN PROXIMTY TO WASTEWATER PROCESSES. THE CONTRACTOR SHALL TAKE ALL PRECAUTIONS TO PROTECT EXISTING PROCESSES AND EQUIPMENT, AND PREVENT INTERRUPTION OR UPSET TO TREATMENT AS A RESULT OF HIS ACTIONS. CONTRACTOR MAY BE HELD RESPONSIBLE FOR DAMAGES RESULTING FROM INTERRUPTION OF, OR DISRUPTION TO TREATMENT PROCESSES CAUSED BY ACTION OR INACTION ON THE CONTRACTOR'S PART.

21. CONTRACTOR IS RESPONSIBLE FOR COMPLIANCE WITH APPLICABLE HEALTH AND SAFETY REGULATIONS FOR HAZARD COMMUNICATION, AND TRAINING OF PERSONNEL FOR WORK IN PROXIMITY TO WASTEWATER.

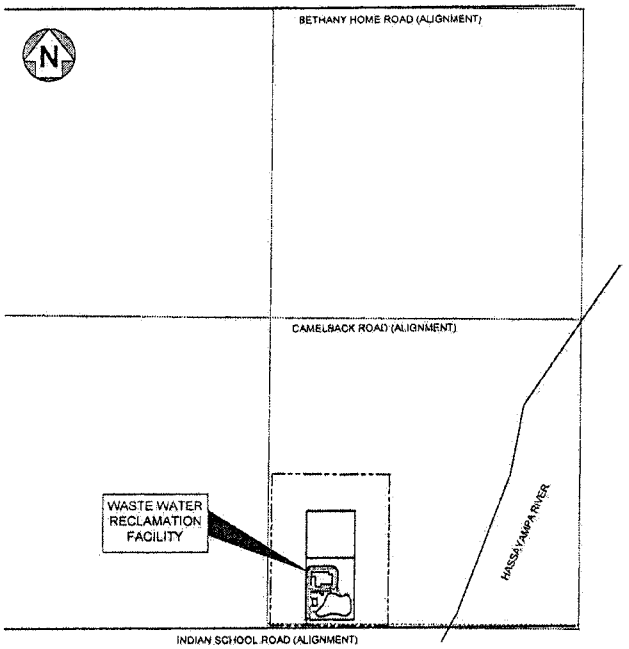

LOCATION MAP
1" = 1000'

ABBEVIATIONS

AB	ANCHOR BOLT
ABS	ACRYLONITRILE BUTADIENE STYRENE
ALUM	ALUMINUM
AVG	AVERAGE
AVR	AUTO AIR AND VACUUM RELEASE
BLDG	BUILDING
BM	BENCH MARK
BOT	BOTTOM
CJ	CONSTRUCTION JOINT
CL	CENTER LINE
CMP	CORRUGATED METAL PIPE
CONC	CONCRETE
CONN	CONNECTION
CONT	CONTINUOUS
CPVC	POST-CHLORINATED POLYVINYL CHLORIDE
CSTG	CASTING
CU	CUBIC COPPER
DB	DUCT BANK
DET	DETAIL
DI	DUCTILE IRON
DIA	DIAMETER
DN	DOWN
DO	DISSOLVED OXYGEN
DP	DISTRIBUTION PANELBOARD
DS	DISSOLVED SOLIDS
DTC	DATA TERMINAL CABINET
DWG	DRAWING
EL	ELEVATION
EQ	EQUAL, EQUALIZATION
EQPT	EQUIPMENT
EXP JT	EXPANSION JOINT
F	FLANGE
FL	FLOOR
FLG	FLANGE
FRP	FIBERGLASS REINFORCED PLASTIC
FT	FOOT (FEET)
GA	GAUGE
GPM	GALLONS PER MINUTE
HGT	HEIGHT
HM	HOLLOW METAL
HORIZ	HORIZONTAL
HP	HIGH POINT
ID	INSIDE DIAMETER
IN	INCH (ES)
INV	INVERT
LAV	LAVATORY
LCP	LIGHTING CONTROL PANEL
LP	LIGHTING PANELBOARD, LOW POINT
LR	LONG RADIUS

ABBEVIATIONS (cont)

MG	MILLION GALLONS
MGD	MILLION GALLONS PER DAY
MH	MANHOLE
MIN	MINIMUM
MJ	MECHANICAL JOINT
MLSS	MIXED LIQUOR SUSPENDED SOLIDS
NO.	NUMBER
NPSH	NET POSITIVE SUCTION HEAD
NTS	NOT TO SCALE
OA	OUTSIDE AIR
OC	ON CENTER
OD	OUTSIDE DIAMETER
OVHD	OVERHEAD
PC	POINT OF CURVATURE
pH	HYDROGEN ION CONCENTRATION
PI	POINT OF INTERSECTION
PL	PLATE
PT	POINT, POINT OF TANGENCY
PVC	POLYVINYL CHLORIDE
LB	LB
PE	PLAIN END
PL	PROPERTY LINE
PSF	POUNDS PER SQUARE FOOT
RCP	REINFORCED CONCRETE PIPE
RED	REDUCING
REQD	REQUIRED
OM	ROOM
ROW	RIGHT OF WAY
RTU	REMOTE TERMINAL UNIT
SBR	SEQUENCING BATCH RACTOR
SQ	SQUARE
SST	STAINLESS STEEL
STD	STANDARD
SS	SUSPENDED SOLIDS
STL	STEEL
TCP	TEMPERATURE CONTROL PANEL
TDS	TOTAL DISSOLVED SOLIDS
TEMP	TEMPERATURE
THK	THICK
TOC	TOP OF CONCRETE
TSS	TOTAL SUSPENDED SOLIDS
TYP	TYPICAL
VERT	VERTICAL
VOC	VOLATILE ORGANIC COMPOUND
VS	VOLATILE SOLIDS
VSS	VOLATILE SUSPENDED SOLIDS
W/	WITH
WS	WATER STOP

Registered Professional Engineer (Civil)
CERTIFICATE NO. 33441
BRIAN P. McBRIDE
Date Signed 6-2-08
ARIZONA U.S.A.
Expires 03/31/11

NO.	DATE	BY	REVISION DESCRIPTION

GLOBAL WATER
RELIABLE · RENEWABLE · REUSABLE
21410 N. 19th Ave. · Ste. 201 · Phoenix, AZ 85027
Ph: 623.000.9000 · Fax: 623.000.9659
www.gwresources.com

HASSAYAMPA NORTHEAST CAMPUS 1 WATER RECLAMATION FACILITY

McBride Engineering Solutions, Inc.
6100 West Gila Springs Pl., Suite 7
Chandler, AZ. 85226
Phone: (480) 759-9608

LEGEND, VICINITY MAP, ABBREVIATIONS, GENERAL NOTES

DESIGNED: MJA/DMK
DRAWN: MG/KPB CHECKED: BPM
DATE: 05-30-08
DWG. NO. G3
SHEET 3 OF 81

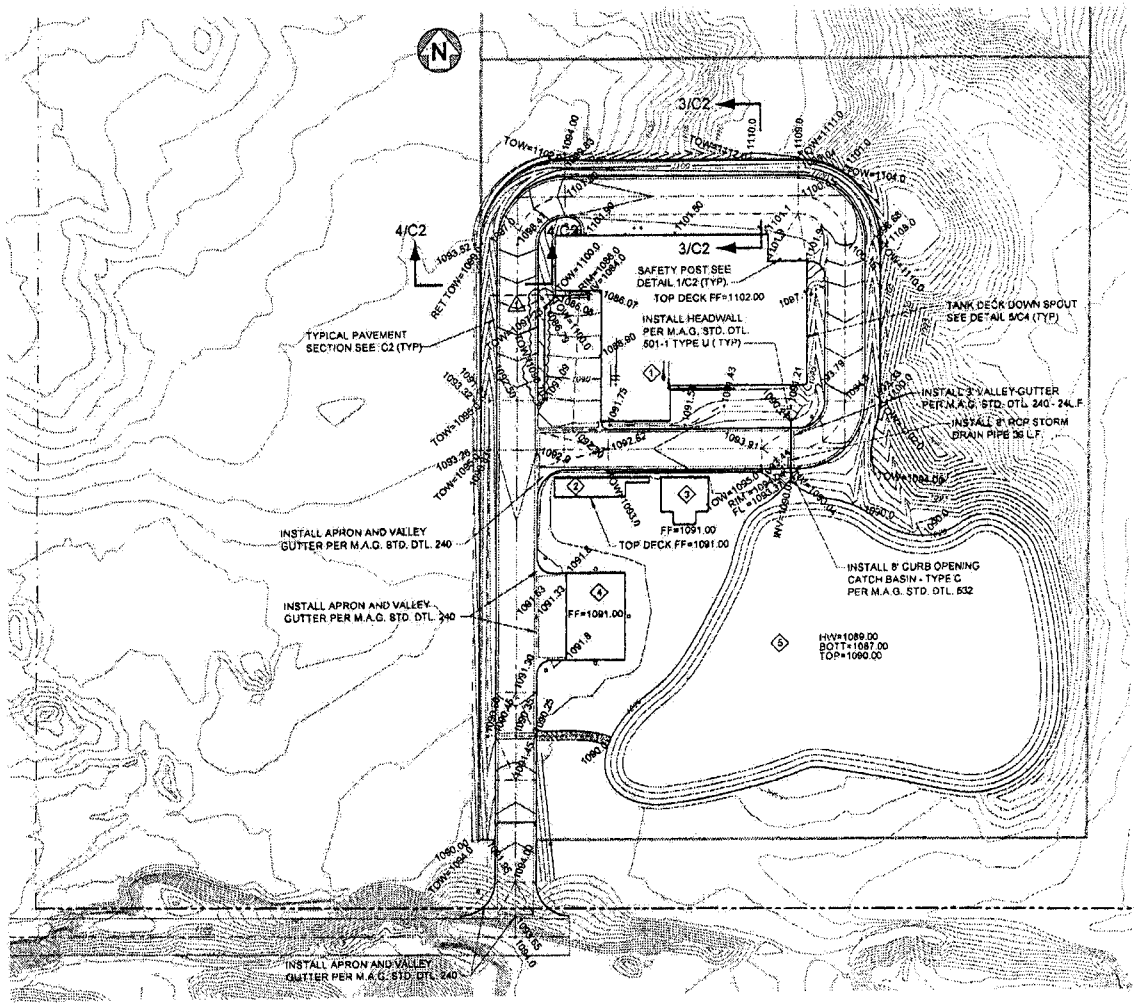

PAVING AND GRADING PLAN
SCALE: 1" = 80'-0"

PAVING AND GRADING NOTES

1. PROVIDE AND INSTALL AC PAVEMENT, AC CURB AND CONCRETE SIDEWALK IN ACCORDANCE WITH TYPICAL DETALS THIS SHEET.
2. PROVIDE AND INSTALL AC PAVEMENT, AC CURB AND CONCRETE SIDEWALK IN ACCORDANCE WITH TYPICAL DETAILS. DWG G3.
3. MATCH NEW PAVEMENT, CURB, GUTTER AND SIDEWALK TO EXISTING FLUSH.
4. ROADWAY/PAVEMENT WIDTHS AND RADII CITED ARE TO BACK OF CURB, FACE OF STRUCTURE OR ROADWAY CENTERLINE UNLESS NOTED OTHERWISE.
5. ADJUST ELEVATION OF MANHOLE RIMS, CATCH BASIN GRATES AND VALVE BOX COVERS TO MATCH SURROUNDING PAVEMENT FLUSH.
6. FOR STORM DRAIN PIPING, SEE SITE YARD PIPING PLAN, DWG C3.
7. FOR VALVE BOX LOCATIONS, SEE SITE YARD PIPING PLAN, DWG C3.
8. ADJUST ALL EXISTING AND NEW MANHOLES, VALVE BOXES, CLEANOUTS AND FIRE HYDRANTS WITHIN WORK LIMITS TO FINAL GRADE.
9. DRAIN HEADBOX AND RECTANGULAR DOWNSPOUT TO SPLASH BLOCK AT GRADE SEE SITE YARD PIPING DETAILS, DWG C4.
10. RIP-RAP LINED SWALE TO STORM DRAIN INLET GRATE.
11. RIP-RAP FROM 8" STORM DRAIN OUTFALL TO BACK OF CURB SEE SITE YARD PIPING DETAILS , DWG C4.

ROADS, WALKS AND GRADING NOTES

1. ON-SITE VERTICAL AND HORIZONTAL CONTROL POINTS SHALL BE ESTABLISHED BY THE SURVEYOR, PROTECT ON-SITE CONTROL POINTS FROM DAMAGE. COST OF RE-ESTABLISHING CONTROL POINTS LOST OR DISTURBED DURING CONSTRUCTION SHALL BE BORNE BY THE CONTRACTOR RESPONSIBLE FOR THE DAMAGE.
2. COORDINATE ELEVATIONS OF FINISH PAVEMENT (DWGS G3 AND G4) AND RIMS OF MANHOLE, VALVE BOX, CLEANOUT AND FLUSHING CONNECTION COVERS (DWGS G7 AND G8) TO MEET FLUSH.
3. WHERE NEW PAVEMENT MEETS EXISTING, SAWCUT EXISTING PAVEMENT TO NEAT EDGE. MATCH NEW PAVEMENT CONTOUR AND ELEVATION TO EXISTING PAVEMENT.
4. AT RE-GRADED AREAS, DO NOT EXCEED 3:1 SLOPE.

KEYNOTES LEGEND

1. MAIN PROCESS STRUCTURE
   - SOLIDS HANDLING
   - EQUIPMENT GALLERY
   - DIGESTER
   - WEST SBR
   - EAST SBR
   - EQUALIZATION BASIN
   - ODOR CONTROL
   - ELECTRICAL ROOM
   - OPERATIONS BLDG
   - HEADWORKS
2. ULTRAVIOLET DISINFECTION
3. TERTIARY FILTERS
4. MAINTENANCE BUILDING
5. RETENTION BASIN

ROADS, WALKS AND GRADING LEGEND

EXISTING SURFACE FEATURES

- 1' INTERVAL CONTOUR
- 5' INDEX CONTOUR

NEW SURFACE FEATURES

- 1' INTERVAL CONTOUR
- 1000 — 5' INDEX CONTOUR
- + 1000 — SPOT ELEVATION
- RIP RAP
- RETAINING WALL
- SITE WALL
- STORM DRAIN PIPE
- CURB AND GUTTER
- SITE WALL
- NEW RIGHT-OF-WAY
- PROPERTY LINE
- ROAD CENTERLINE

Registered Professional Engineer (Civil)
CERTIFICATE NO. 33441
BRIAN P. McBRIDE
Date Signed
ARIZONA, U.S.A.
Expires 03/31/11

NO.	DATE	BY	REVISION DESCRIPTION
1	6-30-08	MG	PER MCESD REVIEW COMMENTS 6-30-08

GLOBAL WATER
RELIABLE · RENEWABLE · REUSABLE
21410 N. 19th Ave. · Ste. 201 · Phoenix, AZ 85027
Ph: 623.580.9600 · Fx: 623.580.9699
www.gwresources.com

HASSAYAMPA NORTHEAST CAMPUS 1 WATER RECLAMATION FACILITY

McBride Engineering Solutions, Inc.
6100 West Gila Springs Pl., Suite 7
Chandler, AZ 85226
Phone: (480) 759-9608

SITE PLAN
GRADING AND PAVING

DESIGNED: MJA/DMK
DRAWN: MG/KPB | CHECKED: BPM
DATE: 06-30-08
DWG. NO. C1
SHEET 4 OF 81

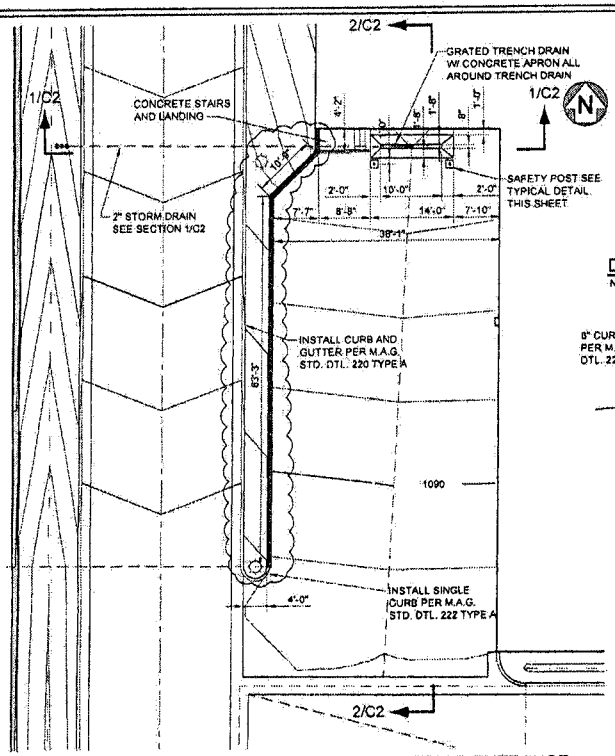

DETAIL 2/C1 - SOLIDS HANDLING ENTRANCE
SCALE: 1" = 20'-0"

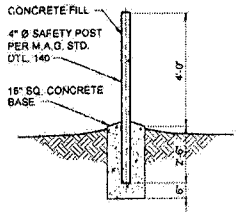

DETAIL 1 - TYPICAL SAFETY POST
NOT TO SCALE

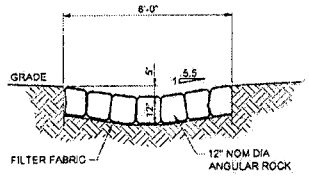

TYPICAL SECTION - LINED SWALE
NOT TO SCALE

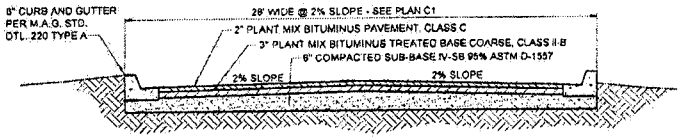

TYPICAL PAVEMENT SECTION
NOT TO SCALE

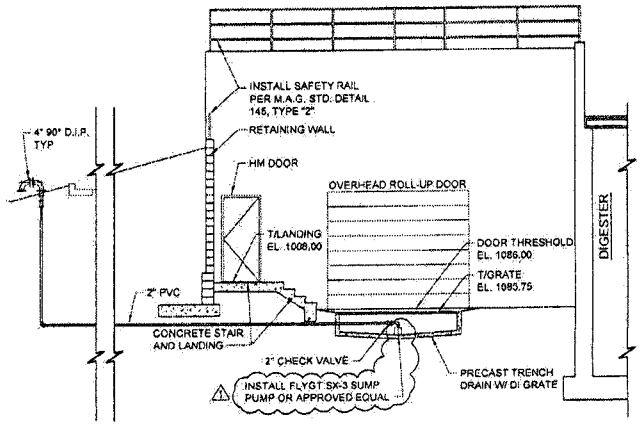

SECTION 1/C2
SCALE: 1" = 10'-0"

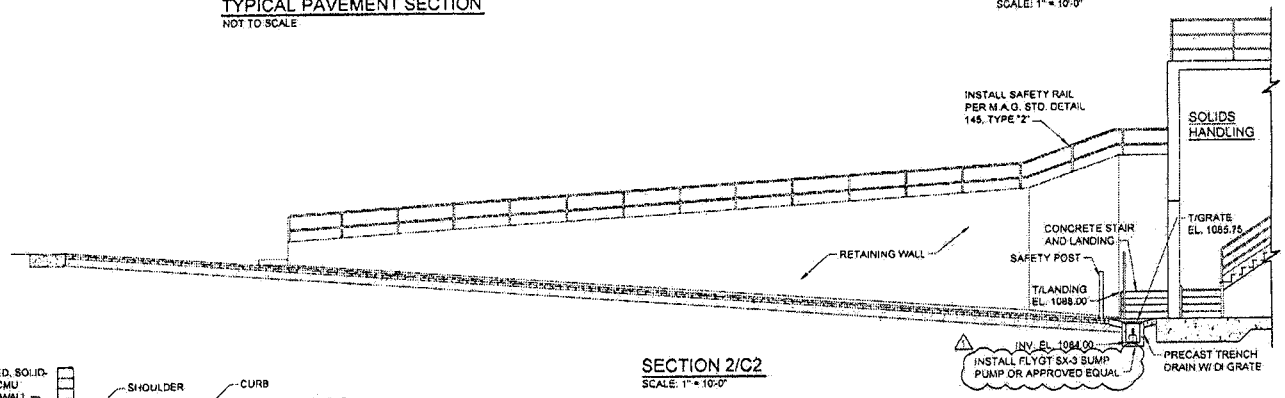

SECTION 2/C2
SCALE: 1" = 10'-0"

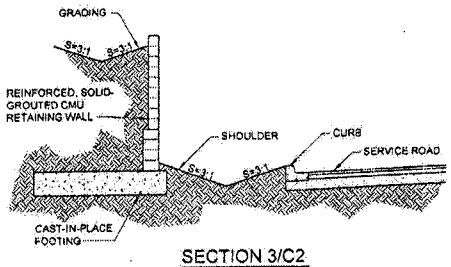

SECTION 3/C2
SCALE: 1" = 10'-0"

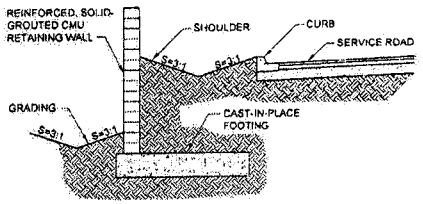

SECTION 4/C2
SCALE: 1" = 10'-0"

Registered Professional Engineer (Civil)
CERTIFICATE NO. 33441
BRIAN P. McBRIDE
Date Signed
ARIZONA, U.S.A.
Expires 03/31/11

NO.	DATE	BY	REVISION DESCRIPTION
1	6-30-08	MG	PER MCESD REVIEW COMMENTS 6-30-08

GLOBAL WATER
RELIABLE · RENEWABLE · REUSABLE
21410 N. 19th Ave. · Ste. 201 · Phoenix, AZ 85027
Ph: 623.580.9600 · Fx: 623.580.9659
www.gwresources.com

HASSAYAMPA NORTHEAST CAMPUS 1 WATER RECLAMATION FACILITY

McBride Engineering Solutions, Inc.
6100 West Gila Springs Pl., Suite 7
Chandler, AZ 85226
Phone: (480) 759-9608

GRADING AND PAVING DETAILS

DESIGNED: MJA/DMK
DRAWN: MG/KPB CHECKED: BPM
DATE: 05-30-08
DWG. NO. C2
SHEET 5 OF 81

YARD PIPING NOTES

1. ALL DI AND GLDI PIPE IS PRESSURE CLASS 350.
2. RESTRAIN ALL MECHANICAL JOINT DIRECT BURIED PIPE UNLESS NOTED OTHERWISE.
3. ALL PVC PIPE IS AWWA C-900, PRESSURE CLASS 200, CR14.

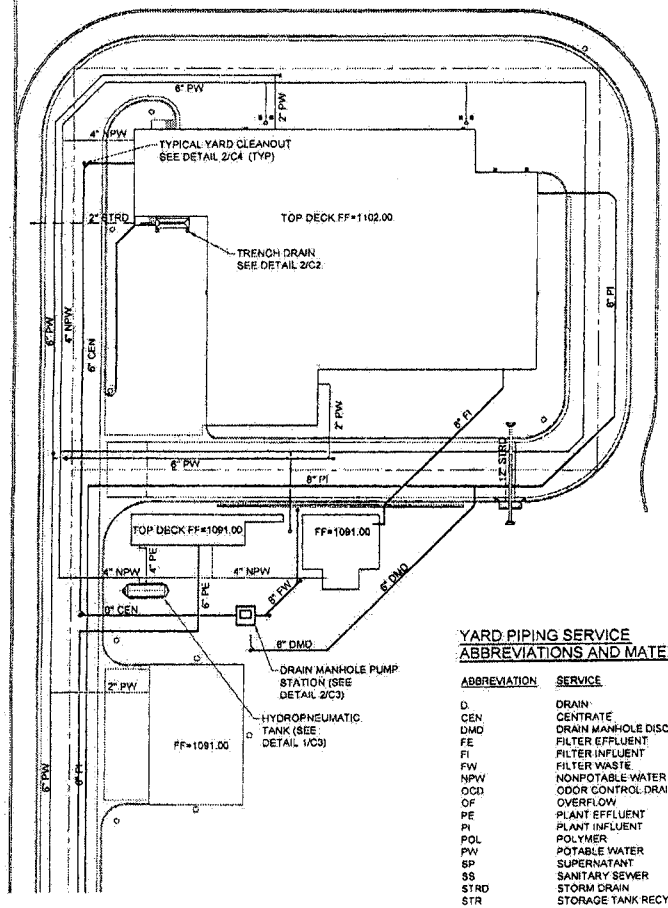

YARD PIPING PLAN

SCALE: 1" = 50'-0"

YARD PIPING SERVICE ABBREVIATIONS AND MATERIAL

ABBREVIATION	SERVICE	MATERIAL
D	DRAIN	DI
CEN	CENTRATE	GLDI
DMD	DRAIN MANHOLE DISCHARGE	PVC
FE	FILTER EFFLUENT	DI
FI	FILTER INFLUENT	DI
FW	FILTER WASTE	DI
NPW	NONPOTABLE WATER	PVC
ODD	ODOR CONTROL DRAIN	PVC
OF	OVERFLOW	PVC
PE	PLANT EFFLUENT	PVC
PI	PLANT INFLUENT	PVC
POL	POLYMER	PVC
PW	POTABLE WATER	PVC
SP	SUPERNATANT	GLDI
SS	SANITARY SEWER	DI
STRD	STORM DRAIN	RCP
STR	STORAGE TANK RECYCLE	PVC

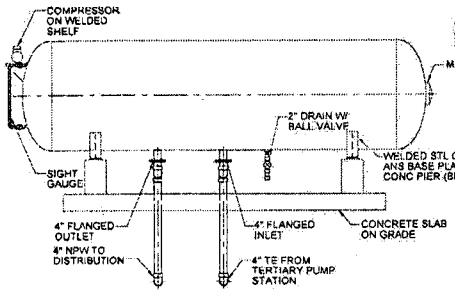

NPW HYDRONEUMATIC - SOUTH ELEVATION

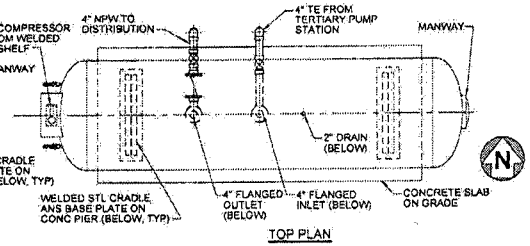

TOP PLAN

DETAIL 1/C3 - NPW HYDROPNEUMATIC

SCALE: 3/16" = 1'-0"

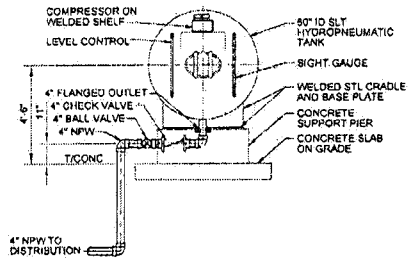

NPW HYDRONEUMATIC - WEST ELEVATION

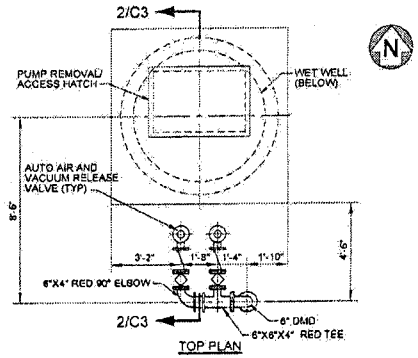

TOP PLAN

DETAIL 2/C3 - DRAIN MANHOLE PUMP STATION

SCALE: 3/16" = 1'-0"

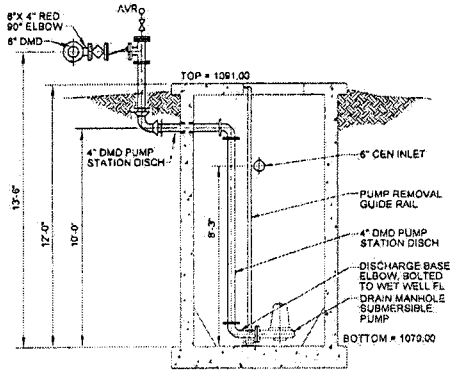

SECTION 2/C3

SCALE: 3/16" = 1'-0"

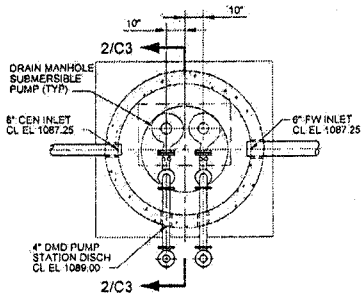

SECTIONAL PLAN

Registered Professional Engineer (Civil)
CERTIFICATE NO. 33441
BRIAN P. McBRIDE
Date Signed 6-2-08
ARIZONA U.S.A.

Expires 03/31/11

NO.	DATE	BY	REVISION DESCRIPTION

GLOBAL WATER
RELIABLE · RENEWABLE · REUSABLE
21410 N. 19th Ave. · Ste. 201 · Phoenix, AZ 85027
Ph: 623.580.9600 · Fx: 623.580.9659
www.gwresources.com

HASSAYAMPA NORTHEAST CAMPUS 1 WATER RECLAMATION FACILITY

McBride Engineering Solutions, Inc.
6100 West Gila Springs Pl., Suite 7
Chandler, AZ. 85226
Phone: (480) 759-9608

YARD PIPING PLAN AND DETAILS

DESIGNED: MJA/DMK
DRAWN: MG/KPB | CHECKED: BPM
DATE: 05-30-08
DWG. NO. C3
SHEET 6 OF 81

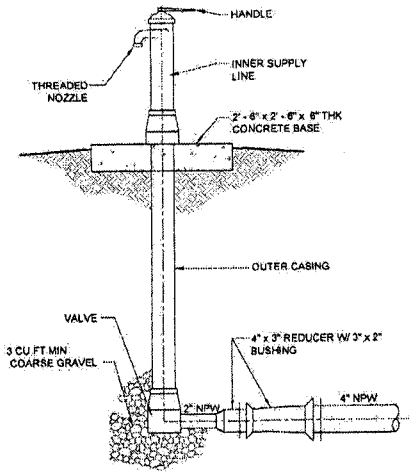

DETAIL 1/C4 - TYPICAL YARD HYDRANT

SCALE: N.T.S.

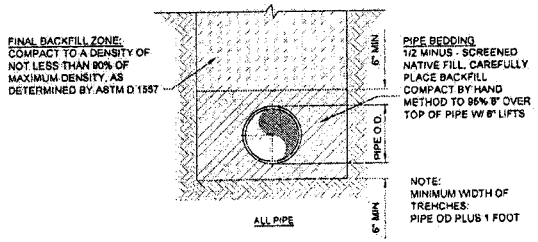

DETAIL 3/C4 - TYPICAL PIPE BEDDING AND BACKFILL

SCALE: N.T.S.

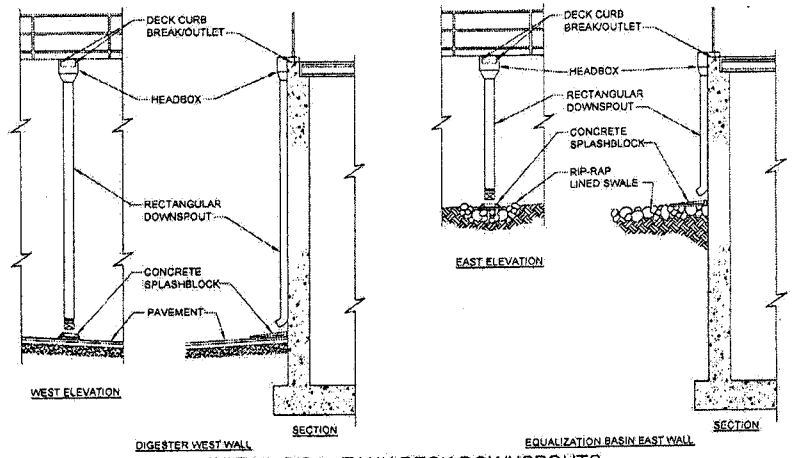

DETAIL 5/C4 - TANK DECK DOWNSPOUTS

SCALE: 1/8" = 1'-0"

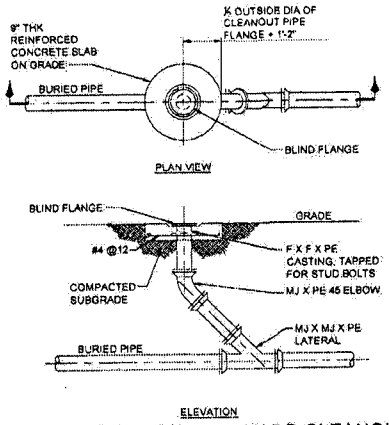

DETAIL 2/C4 - TYPICAL YARD CLEANOUT

SCALE: N.T.S.

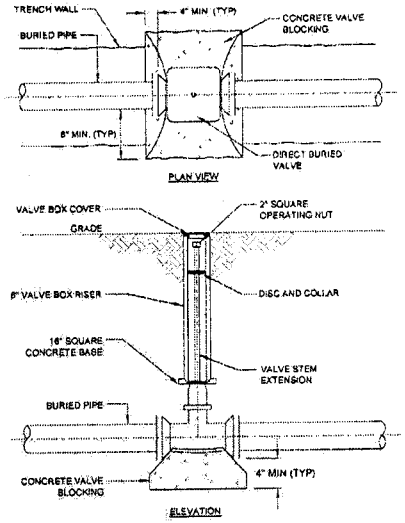

DETAIL 4/C4 - TYPICAL VALVE BOX DETAIL

SCALE: N.T.S.

Registered Professional Engineer (Civil)
CERTIFICATE NO. 33441
BRIAN P. McBRIDE
Date Signed 6-2-08
ARIZONA, U.S.A.
Expires 03/31/11

NO.	DATE	BY	REVISION DESCRIPTION

GLOBAL WATER
RELIABLE · RENEWABLE · REUSABLE
21410 N. 19th Ave. · Ste. 201 · Phoenix, AZ 85027
Ph: 623.580.8600 · Fx: 623.580.8609
www.gwresources.com

HASSAYAMPA NORTHEAST CAMPUS 1 WATER RECLAMATION FACILITY

McBride Engineering Solutions, Inc.
6100 West Gila Springs Pl., Suite 7
Chandler, AZ 85226
Phone: (480) 759-9608

YARD PIPING DETAILS

DESIGNED: MJA/DMK
DRAWN: MG/KPB CHECKED: BPM
DATE: 05-30-08
DWG. NO. C4
SHEET 7 OF 61

STRUCTURAL REQUIREMENTS

1. THE STRUCTURAL REQUIREMENTS DRAWINGS PROVIDED HERE ARE INTENDED TO DEFINE THE SCOPE OF THE STRUCTURAL WORK AND THE BASIS FOR THE STRUCTURAL DESIGN. THE CONTRACTOR SHALL SUBMIT DETAILED STRUCTURAL DESIGN DRAWINGS, IN COMPLIANCE WITH THE REQUIREMENTS, THAT MUST BE APPROVED PRIOR TO COMMENCING WORK ON ANY STRUCTURES SHOWN ON THE DRAWINGS.

2. GENERAL NOTES SHOWN ON THIS CONTRACT DOCUMENT ARE SUPPLEMENTAL TO THE REFERENCED CODE REQUIREMENTS WHICH SHALL BE REFERRED TO FOR ADDITIONAL REQUIREMENTS.

3. OBTAIN ENGINEER'S APPROVAL FOR ALL SUBSTITUTIONS.

4. DO NOT SCALE DRAWINGS. IF DIMENSIONS OR DETAILS ARE NOT CLEAR, OR DISCREPANCIES EXIST ON DRAWINGS CONTACT ENGINEER WITH WRITTEN CLARIFICATION REQUEST.

5. CHECK ALL DIMENSIONS ON STRUCTURAL REQUIREMENTS DRAWINGS AGAINST MECHANICAL, CIVIL, AND ELECTRICAL DRAWINGS.

6. VERIFY LOCATIONS AND SIZE OF ALL OPENINGS THROUGH FLOORS, ROOFS AND WALLS WITH MECHANICAL, CIVIL AND ELECTRICAL REQUIREMENTS.

GOVERNING CODES

1. WATER RETAINING CONCRETE STRUCTURES	ACI 350-01
2. BUILDING LOADS	UBC 1997
3. PLACEMENT AND DETAILING OF CONCRETE REINFORCEMENT	ACI 315-94
4. STRUCTURAL STEEL	AISC/ASD 9TH EDITION
5. MASONRY STRUCTURES	ACI 530-99/ASCE 5-99

DESIGN LOADS

1. LIVE LOADS USED IN DESIGN – SEE PLAN.

2. SEISMIC LOADS FOR BUILDINGS AND ABOVE GRADE STRUCTURES PER UBC 1997.

3. SEISMIC LOADS FOR WATER RETAINING STRUCTURES PER ACI 350.3-01.

4. WIND LOADS FOR BUILDINGS AND ABOVE GRADE STRUCTURES PER UBC 1997
   REFERENCE WIND VELOCITY : 75 MPH
   EXPOSURE CLASSIFICATION PER UBC: C

5. LIVE LOAD USED TO DESIGN STAIR: 100 PSF (PROJECTED)

FOUNDATIONS

1. COORDINATE FOUNDATION DESIGN WITH GEOTECHNICAL ENGINEER.

2. PLACE FOOTING ON UNDISTURBED NATURAL MATERIALS OR STRUCTURAL FILL AS APPROVED BY THE GEOTECHNICAL ENGINEER.

3. DESIGN LOAD SOIL BEARING PRESSURE FOR RETAINING WALLS AND SPREAD FOOTINGS:
   I. ON UNDISTURBED NATURAL SOILS 2500 PSF
   II. ON COMPACTED FILL 2000 PSF

4. DESIGN LOAD SOIL BEARING PRESSURE FOR MAT FOUNDATION: 4000 PSF

5. REFER TO CIVIL DRAWINGS FOR EXTERIOR WALKWAYS, CURBS, WALKS, RAMPS, RAILING, SLAB DEPRESSIONS, DRAINS, PIPING ETC.

STRUCTURAL TEST AND INSPECTION REQUIREMENTS

IN ADDITION TO ANY REQUIREMENTS BY THE GOVERNING BUILDING DEPARTMENT

1. REFER TO THE 1997 UBC FOR AMPLIFICATION OF THE FOLLOWING REQUIREMENTS.

	YES	NO
2. FOUNDATIONS:		
A. COMPACTED FILL INCLUDING UTILITY TRENCHES	☒	☐
B. VISUAL EXAMINATION & APPROVAL OF ALL FOUNDATION EXCAVATIONS	☒	☐
3. CONCRETE:		
A. CONTINUOUS INSPECTION & TEST CYLINDERS FOR CONCRETE OVER 2500 PSI	☒	☐
B. BOLTS AND EMBEDDED PLATES INSTALLED IN CONCRETE (DURING INSTALLATION AND PLACING OF CONCRETE)	☒	☐
4. REINFORCING STEEL:		
A. PLACING OF REINFORCING	☒	☐
B. SAMPLING & TESTING OF STEEL (MILL REPORTS & IDENTIFICATION OF STEEL)	☒	☐
5. WELDING:		
A. CONTINUOUS INSPECTION OF ALL STRUCTURAL STEEL FIELD WELDING (INCLUDING DECKING AND WELDED STUDS)	☒	☐
B. NONDESTRUCTIVE TESTING OF FULL PENETRATION WELDS	☐	☒
C. STRUCTURAL LIGHT GAGE METAL FRAMING	☐	☒
6. ANCHORAGE AND CONNECTIONS:		
A. HIGH-STRENGTH BOLTING	☐	☒
B. EXPANSION BOLTS IN CONCRETE AND MASONRY	☒	☐
C. INSTALLATION OF EPOXY ANCHORED BOLTS, RODS, OR REBAR	☒	☐
7. MASONRY:		
A. SAMPLING AND TESTING OF MASONRY	☒	☐
B. TESTING OF GROUT AND MORTAR PRISMS	☒	☐
C. CONTINUOUS INSPECTION	☒	☐
D. COMPRESSION PRISMS	☒	☐
8. INSULATION CONCRETE FILL:		
A. THICKNESS AND COMPRESSIVE STRENGTH	☐	☒
9. STRUCTURAL STEEL:		
A. MILL REPORTS AND IDENTIFICATION OF STEEL (AFFIDAVIT OF COMPLIANCE)	☒	☐
B. SAMPLING AND TESTING	☐	☒

10. APPROVED FABRICATORS: (MUST SUBMIT CERTIFICATION OF COMPLIANCE) FOR ALL OFF-SITE FABRICATION SUCH AS STRUCTURAL STEEL, STEEL JOISTS, PRECAST CONCRETE, ETC.

ABBREVIATIONS

AB	ANCHOR BOLT	L	ANGLE
B/	BOTTOM OF	LBS OR #	POUNDS
BLDG	BUILDING	LGS	LIGHT GAGE STEEL
BP	BASE PLATE	LLH	LONG LEG HORIZONTAL
BRCG	BRACING	LLV	LONG LEG VERTICAL
C/C	CENTER TO CENTER	LP	LOW POINT
CG	CONTROL GROOVE	MO	MASONRY OPENING
CJ	CONSTRUCTION JOINT	MFR	MANUFACTURER
CL	CENTERLINE	NF	NEAR FACE
CLR	CLEAR	NTS	NOT TO SCALE
CMU	CONCRETE MASONRY UNIT	OC	ON CENTER
CONC	CONCRETE	PL	PLATE
DIA	DIAMETER	PC	PRECAST CONCRETE
DT	DOUBLE TEE	PS	PIPE SUPPORT
DWG	DRAWING	PSI	POUNDS PER SQUARE INCH
EEP	ELECTRICAL EQUIPMENT PAD	REINF	REINFORCING, REINFORCEMENT
EF	EACH FACE	REQD	REQUIRED
EJ	EXPANSION JOINT	SHT	SHEET
EL	ELEVATION	SP	SPACING
EP	EQUIPMENT PAD	SPEC	SPECIFICATIONS
EXIST	EXISTING	SQR	SQUARE
FDN	FOUNDATION	SS	STAINLESS STEEL
FF	FAR FACE	STL	STEEL
FTG	FOOTING	T&B	TOP AND BOTTOM
GA	GAUGE	T/	TOP OF
HC	HOLLOW CORE	TOS	TOP OF STEEL
HP	HIGH POINT	TYP	TYPICAL, TYPICALLY
INFO	INFORMATION	UNO	UNLESS NOTED OTHERWISE
KSI	KIPS PER SQUARE INCH	WP	WORK POINT
		WS	WATERSTOP

TIGHTNESS TESTING FOR WATER RETAINING STRUCTURES

1. PERFORM TIGHTNESS TESTING FOR ALL WATER RETAINING STRUCTURES CONFORMED TO CODE REQUIREMENTS OF ACI 350-01 PRIOR TO BACKFILLING.

TEST PREPARATION:

a) SECURELY SEAL ALL TANK PENETRATIONS AND OUTLETS
b) INSTALL WATER LEVEL MEASURING GAUGES AT 2 OPPOSITE LOCATIONS.
c) FILL THE TANK TO THE OVERFLOW LEVEL.
d) ALLOW 3 DAYS FOR THE EFFECTS OF WATER ABSORPTION INTO CONCRETE.
e) AFTER 3 DAYS, REFILL THE TANK TO THE OVERFLOW LEVEL.

TEST MEASUREMENTS:

a) MEASURE AND RECORD WATER LEVEL AT 24 HOUR INTERVALS FOR 3 DAYS.
b) MEASURE AND RECORD WATER TEMPERATURE AT 18 INCHES BELOW WATER SURFACE AT THE START AND BNEND OF EACH TEST.
c) VISUALLY INSPECT EXTERIOR OF WALLS, TANK PENETRATIONS, OUTLETS AND CONSTRUCTION JOINTS FOR ***SIGNS OF LEAKAGE DURING TEST PERIOD AND MARK THE LOCATIONS OF THE LEAKAGE.

2. LOSS OF WATER IN EXCESS OF 0.1% OF THE TOTAL WATER VOLUME IN ANY 24 HOUR TEST PERIOD WILL REQUIRE REMEDIATION.

Registered Professional Engineer (Civil)
CERTIFICATE NO. 33441
BRIAN P. McBRIDE
Date Signed 6-2-08
ARIZONA U.S.A.
Expires 03/31/11

NO.	DATE	BY	REVISION DESCRIPTION

GLOBAL WATER
RELIABLE · RENEWABLE · REUSABLE
21410 N. 19th Ave. · Ste. 201 · Phoenix, AZ 85027
Ph: 623.580.9600 · Fx: 623.580.9689
www.gwresources.com

HASSAYAMPA NORTHEAST CAMPUS 1 WATER RECLAMATION FACILITY

MES
McBride Engineering Solutions, Inc.
6100 West Gila Springs Pl., Suite 7
Chandler, AZ. 85226
Phone: (480) 759-9608

STRUCTURAL REQUIREMENTS GENERAL NOTES

DESIGNED: MJA/DMK
DRAWN: MG/KPB | CHECKED: BPM
DATE: 05-30-08
DWG. NO. S1
SHEET 8 OF 61

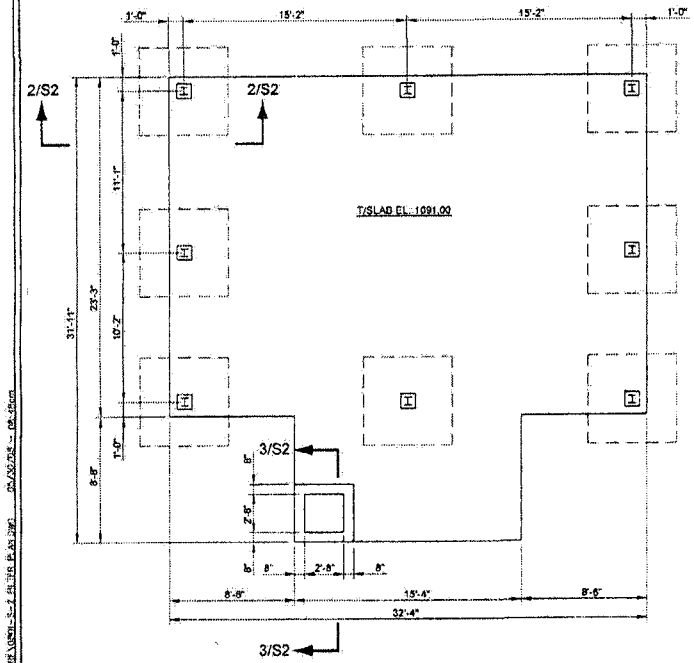

BASE PLAN
SCALE: 1/8" = 1'-0"

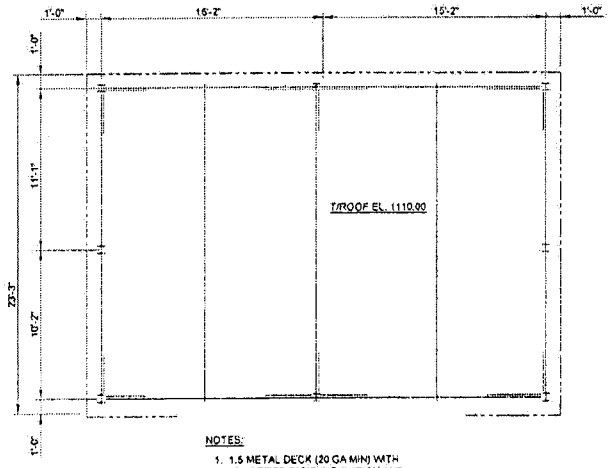

NOTES:

1. 1.5 METAL DECK (20 GA MIN) WITH TAPPERED RIGID INSULATION AND 3 PLY ROOFING.
2. REQUIRED ROOF LIVE LOAD = 20 PSF.

ROOF PLAN
SCALE: 1/8" = 1'-0"

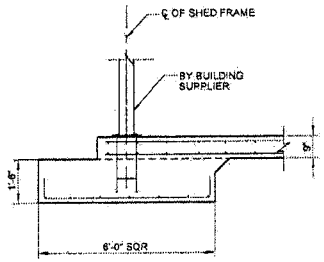

SECTION 2/S2
SCALE: 1/4" = 1'-0"

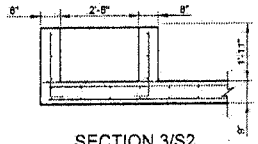

SECTION 3/S2
SCALE: 1/4" = 1'-0"

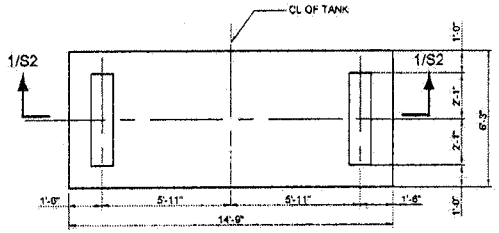

BASE PLAN
SCALE: 3/16" = 1'-0"

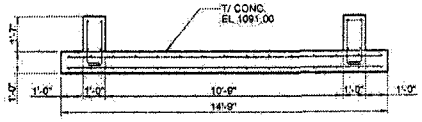

SECTION 1/S2
SCALE: 3/16" = 1'-0"

REQUIRED LOAD = 30 KIPS
REQUIRED SOIL BEARING CAPACITY = 2000PSF

FOUNDATION FOR HYDROPNUEMATIC TANK

Registered Professional Engineer (Civil)
CERTIFICATE NO. 33441
BRIAN P. McBRIDE
Date Signed 6-2-08
ARIZONA U.S.A.
Expires 03/31/11

NO.	DATE	BY	REVISION DESCRIPTION

GLOBAL WATER
RELIABLE · RENEWABLE · REUSABLE
21410 N. 19th Ave. · Ste. 201 · Phoenix, AZ 85027
Ph: 623.580.9600 · Fx: 623.580.9609
www.gwresources.com

HASSAYAMPA NORTHEAST CAMPUS 1 WATER RECLAMATION FACILITY

McBride Engineering Solutions, Inc.
6100 West Gila Springs Pl., Suite 7
Chandler, AZ. 85226
Phone: (480) 759-9608

STRUCTURAL REQUIREMENTS
FILTER PLAN, ROOF PLAN
HYDROPNUEMATIC TANK

DESIGNED: MJA/DMK
DRAWN: MQ/KPB CHECKED: BPM
DATE: 05-30-08
DWG. NO. S2
SHEET 9 OF 61

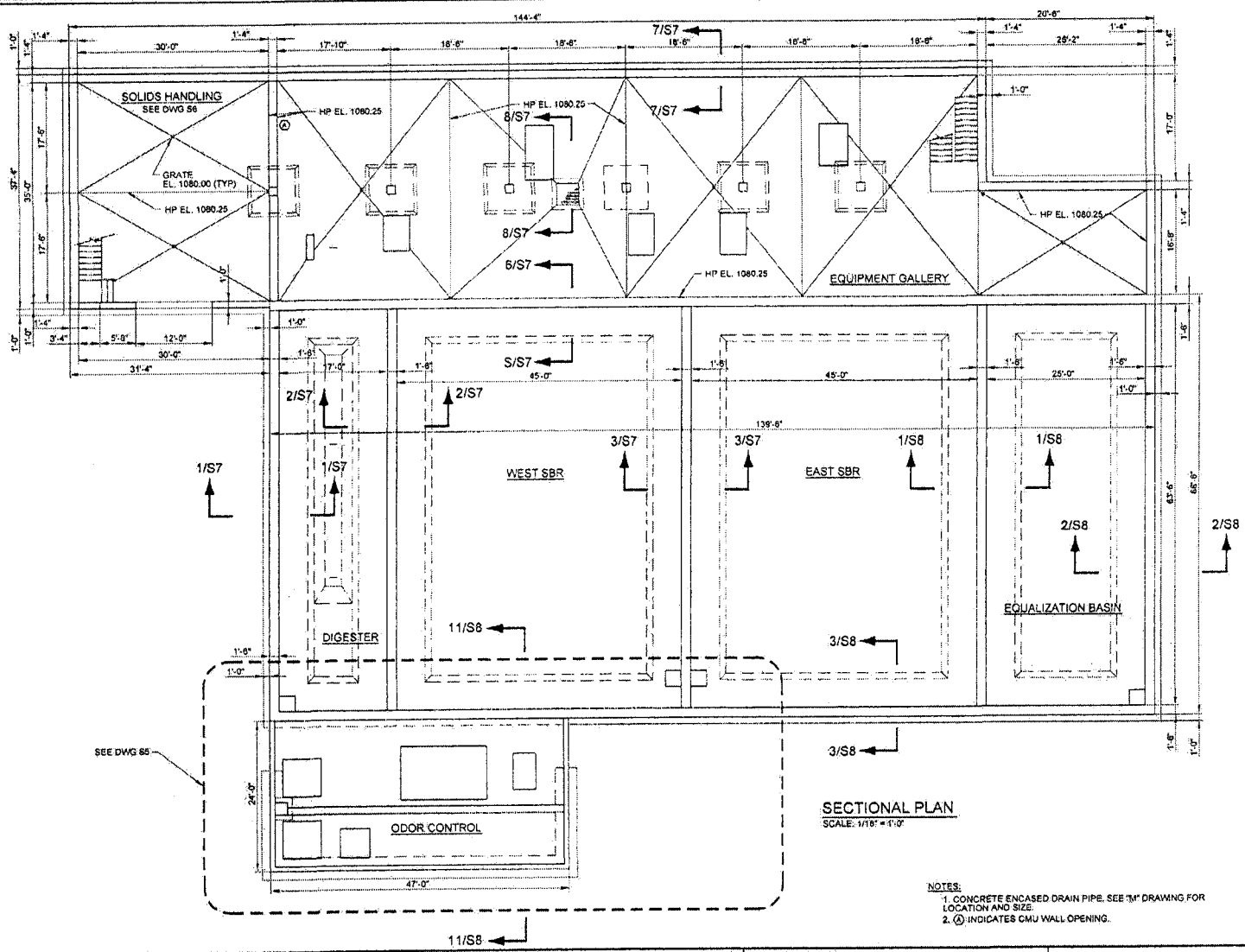

SECTIONAL PLAN

SCALE: 1/16" = 1'-0"

NOTES:

1. CONCRETE ENCASED DRAIN PIPE. SEE "M" DRAWING FOR LOCATION AND SIZE.
2. Ⓐ INDICATES CMU WALL OPENING.

Registered Professional Engineer (Civil)
CERTIFICATE NO. 33441
BRIAN P. McBRIDE
Date Signed 6-2-08
ARIZONA U.S.A.
Expires 03/31/11

NO.	DATE	BY	REVISION DESCRIPTION

GLOBAL WATER
RELIABLE · RENEWABLE · REUSABLE
21410 N. 19th Ave. · Ste. 201 · Phoenix, AZ 85027
Ph: 623.580.9600 · Fx: 623.580.9059
www.gwresources.com

HASSAYAMPA NORTHEAST CAMPUS 1 WATER RECLAMATION FACILITY

McBride Engineering Solutions, Inc.
6100 West Gila Springs Pl., Suite 7
Chandler, AZ. 85226
Phone: (480) 759-9608

STRUCTURAL REQUIREMENTS
MAIN PROCESS STRUCTURE
SECTIONAL PLAN

DESIGNED: MJA/DMK
DRAWN: MG/KPB CHECKED: BPM
DATE: 05-30-08
DWG. NO. S3
SHEET 10 OF 61

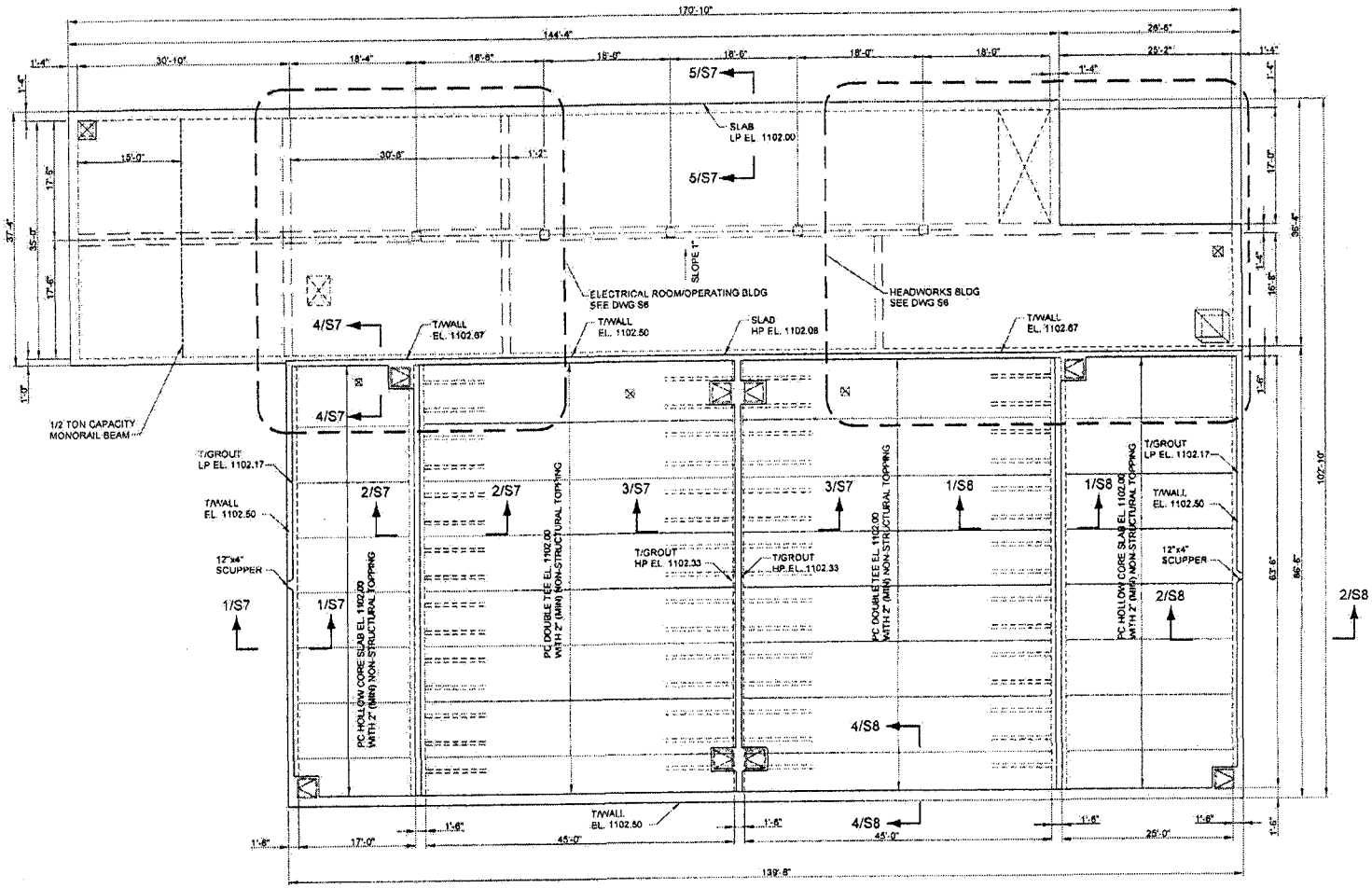

REQUIRED LIVE LOAD = 100PSF

SECTIONAL PLAN

SCALE: 1/16" = 1'-0"

Registered Professional Engineer (Civil)
CERTIFICATE NO. 33441
BRIAN P. McBRIDE
Date Signed 6-2-08
ARIZONA U.S.A.
Expires 03/31/11

NO	DATE	BY	REVISION DESCRIPTION

GLOBAL WATER
RELIABLE · RENEWABLE · REUSABLE
21410 N. 19th Ave. · Ste. 201 · Phoenix, AZ 85027
Ph: 623.580.9600 · Fx: 623.580.9669
www.gwresources.com

HASSAYAMPA NORTHEAST
CAMPUS 1 WATER
RECLAMATION FACILITY

McBride Engineering Solutions, Inc.
6100 West Gila Springs Pl., Suite 7
Chandler, AZ. 85226
Phone: (480) 759-9608

STRUCTURAL REQUIREMENTS
MAIN PROCESS STRUCTURE
TOP PLAN

DESIGNED: MJA/DMK
DRAWN: MO/KPB CHECKED: BPM
DATE: 05-30-08
DWG. NO: S4
SHEET 11 OF 61

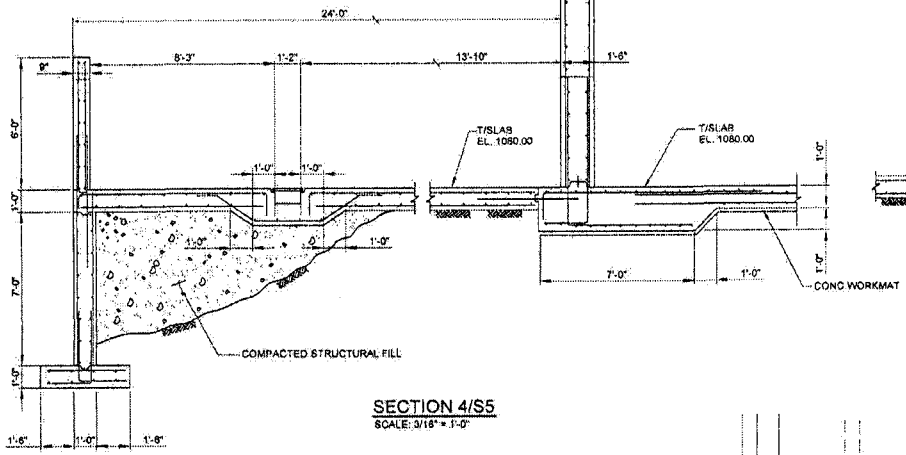

SECTION 4/S5
SCALE: 3/16" = 1'-0"

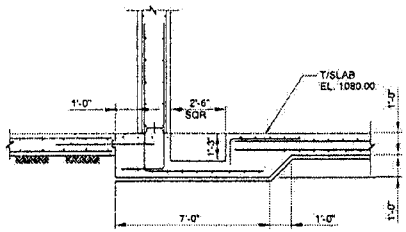

SECTION 1/S5
SCALE: 3/16" = 1'-0"

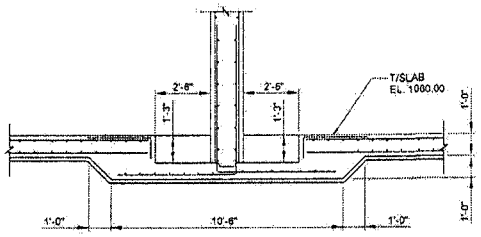

SECTION 2/S5
SCALE: 3/16" = 1'-0"

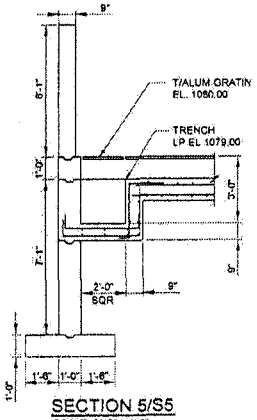

SECTION 5/S5
SCALE: 3/16" = 1'-0"

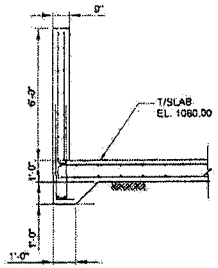

SECTION 3/S5
SCALE: 3/16" = 1'-0"

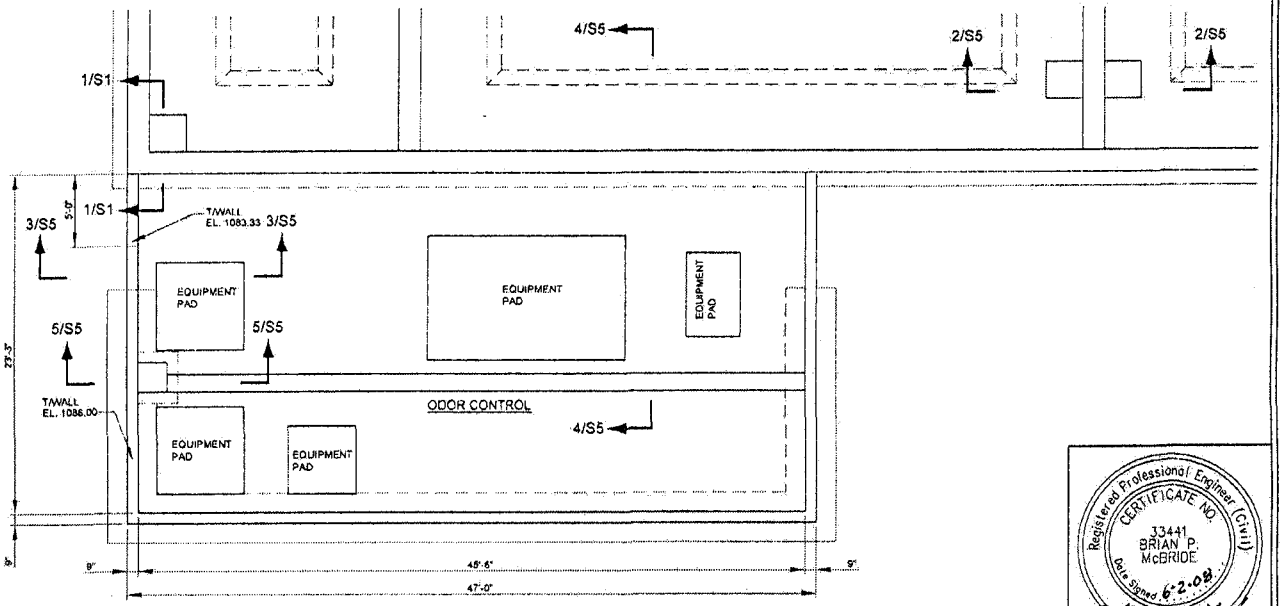

ODOR CONTROL
SCALE: 1/8" = 1'-0"

Registered Professional Engineer (Civil)
CERTIFICATE NO. 33441
BRIAN P. McBRIDE
Date Signed 6-2-08
ARIZONA, U.S.A.
Expires 03/31/11

NO.	DATE	BY	REVISION DESCRIPTION

GLOBAL WATER
RELIABLE · RENEWABLE · REUSABLE
21410 N. 19th Ave. · Ste. 201 · Phoenix, AZ 85027
Ph: 623.580.9600 · Fx: 623.580.9659
www.gwresources.com

HASSAYAMPA NORTHEAST
CAMPUS 1 WATER
RECLAMATION FACILITY

McBride Engineering Solutions, Inc.
6100 West Gila Springs Pl., Suite 7
Chandler, AZ. 85226
Phone: (480) 759-9608

STRUCTURAL REQUIREMENTS
MAIN PROCESS STRUCTURE
SECTIONAL PLAN

DESIGNED: MJA/DMK
DRAWN: MJ/KPB CHECKED: BPM
DATE: 05-30-08
DWG. NO. S5
SHEET 12 OF 61

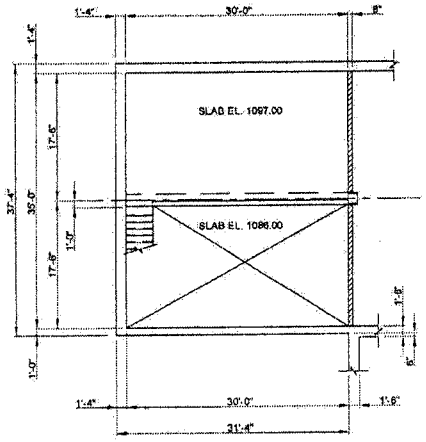

REQUIRED LIVE LOAD = 150 PSF

SOLIDS HANDLING PLAN AT EL. 1097.00, 1086.00

SCALE: 1/16" = 1'-0"

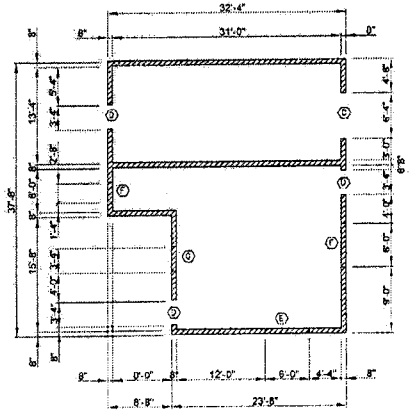

NOTES:
Ⓑ INDICATES CMU WALL OPENING

ELECTRICAL ROOM/OPERATIONS BLDG PLAN AT EL. 1102.00

SCALE: 1/16" = 1'-0"

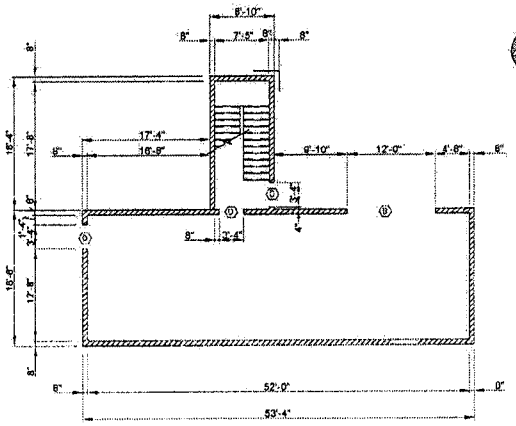

NOTES:
Ⓑ INDICATES CMU WALL OPENING

HEADWORKS PLAN AT EL. 1102.00

SCALE: 1/16" = 1'-0"

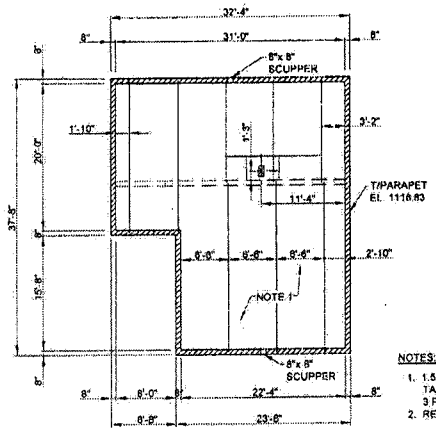

NOTES:
1. 1.5 METAL DECK (20 GA MIN) WITH TAPPERED RIGID INSULATION AND 3 PLY ROOFING.
2. REQUIRED ROOF LIVE LOAD = 20 PSF.

ELECTRICAL ROOM/OPERATIONS BLDG ROOF FRAMING PLAN

SCALE: 1/16" = 1'-0"

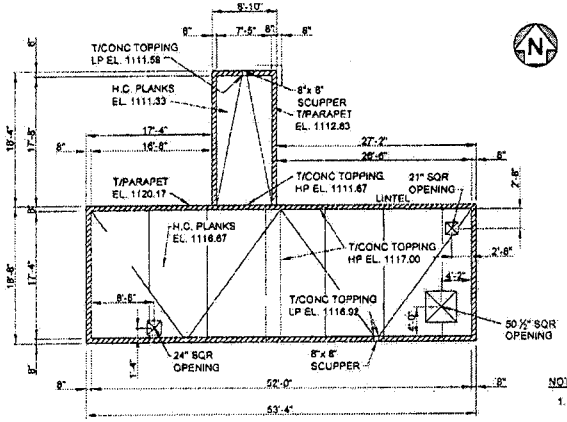

NOTES:
1. REQUIRED ROOF LIVE LOAD = 20 PSF.

HEADWORKS ROOF FRAMING PLAN

SCALE: 1/16" = 1'-0"

Registered Professional Engineer (Civil)
CERTIFICATE NO. 33441
BRIAN P. McBRIDE
Date Signed 6-2-09
ARIZONA U.S.A.
Expires 03/31/11

NO.	DATE	BY	REVISION DESCRIPTION

GLOBAL WATER
RELIABLE · RENEWABLE · REUSABLE
21410 N. 19th Ave. · Ste. 201 · Phoenix, AZ 85027
Ph: 623.580.9600 · Fx: 623.580.9659
www.gwresources.com

HASSAYAMPA NORTHEAST CAMPUS 1 WATER RECLAMATION FACILITY

McBride Engineering Solutions, Inc.
6100 West Gila Springs Pl., Suite 7
Chandler, AZ. 85226
Phone: (480) 759-9608

STRUCTURAL REQUIREMENTS SOLIDS HANDLING/ ELEC. ROOM/ OPERATIONS BLDG/ HEADWORKS

DESIGNED: MJA/DMK
DRAWN: MGK/PB | CHECKED: BPM
DATE: 05-30-09
DWG. NO. S6
SHEET 13 OF 81

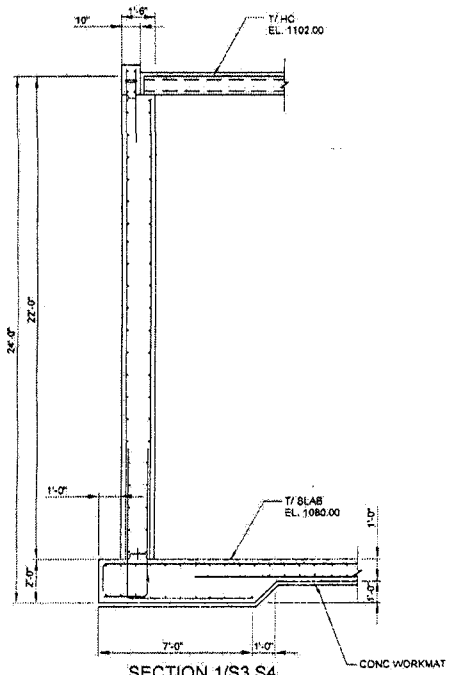

SECTION 1/S3,S4
SCALE: 3/16" = 1'-0"

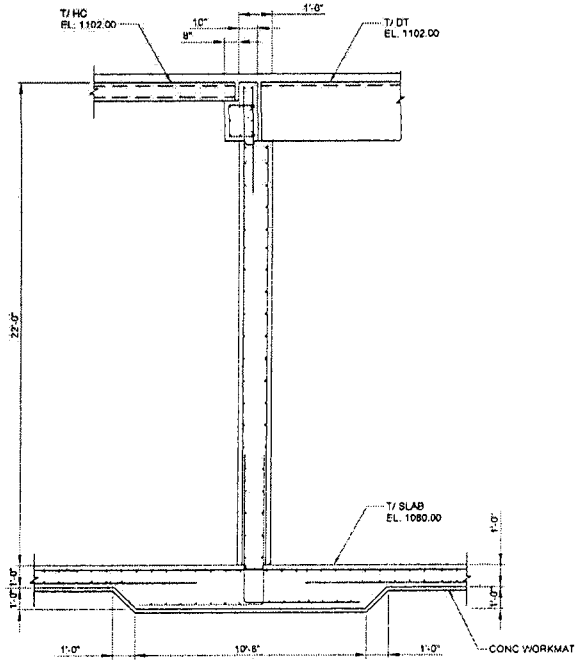

SECTION 2/S3,S4
SCALE: 3/16" = 1'-0"

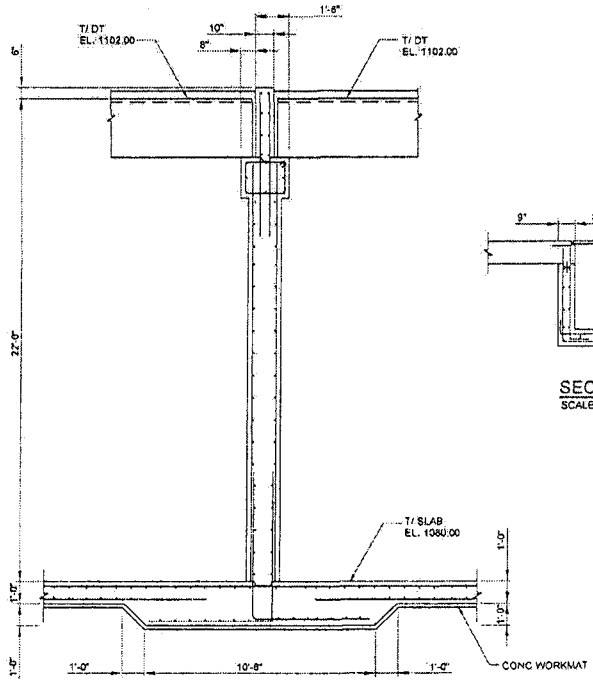

SECTION 3/S3,S4
SCALE: 3/16" = 1'-0"

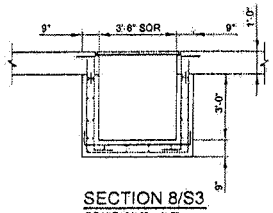

SECTION 8/S3
SCALE: 3/16" = 1'-0"

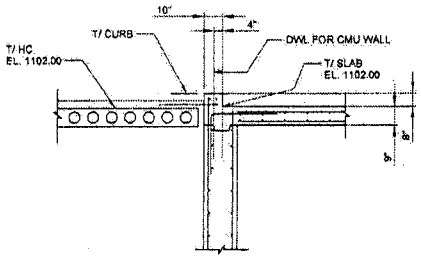

SECTION 4/S4
SCALE: 3/16" = 1'-0"

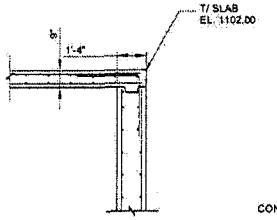

SECTION 5/S4
SCALE: 3/16" = 1'-0"

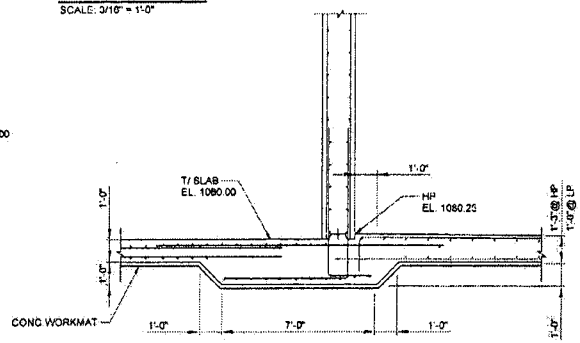

SECTION 6/S3
SCALE: 3/16" = 1'-0"

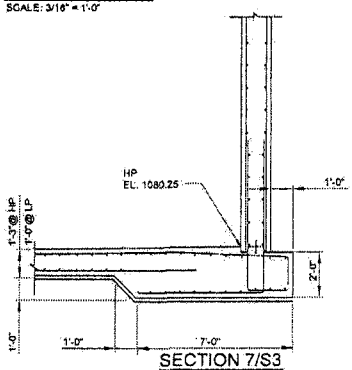

SECTION 7/S3
SCALE: 3/16" = 1'-0"

Registered Professional Engineer (Civil)
CERTIFICATE NO.
33441
BRIAN P.
McBRIDE
Date Signed 6-2-08
ARIZONA U.S.A.
Expires 03/31/11

NO.	DATE	BY	REVISION DESCRIPTION

GLOBAL WATER
RELIABLE · RENEWABLE · REUSABLE
21410 N. 19th Ave. · Ste. 201 · Phoenix, AZ 85027
Ph: 623.580.9600 · Fx: 623.580.9659
www.gwresources.com

HASSAYAMPA NORTHEAST
CAMPUS 1 WATER
RECLAMATION FACILITY

McBride Engineering Solutions, Inc.
6100 West Gila Springs Pl., Suite 7
Chandler, AZ. 85226
Phone: (480) 759-9608

STRUCTURAL REQUIREMENTS
SECTIONS

DESIGNED: MJA/DMK
DRAWN: MG/KPB | CHECKED: BPM
DATE: 05-30-08
DWG. NO.
S7
SHEET 14 OF 61

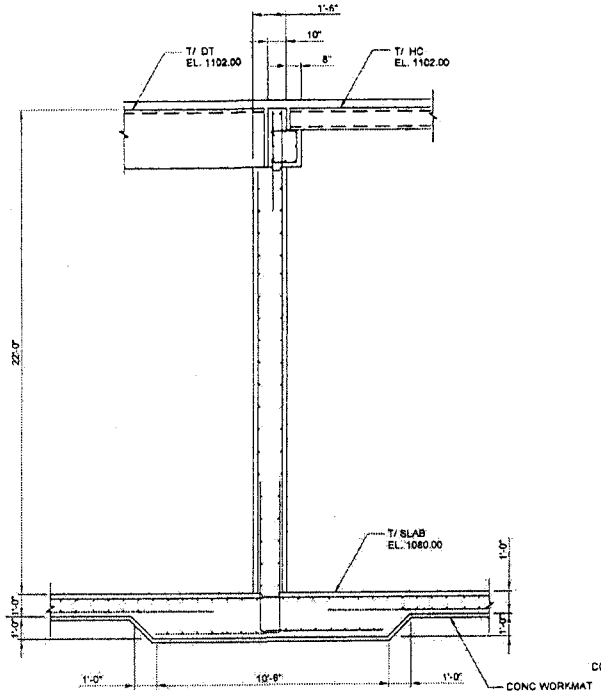

SECTION 1/S3,S4
SCALE: 3/16" = 1'-0"

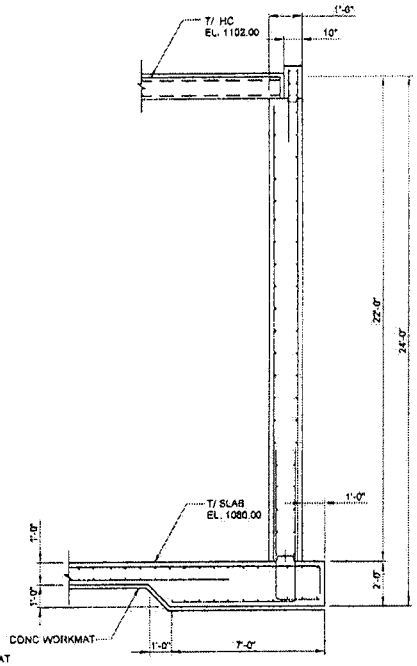

SECTION 2/S3,S4
SCALE: 3/16" = 1'-0"

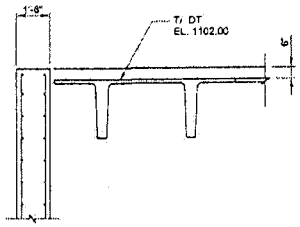

SECTION 4/S4
SCALE: 3/16" = 1'-0"

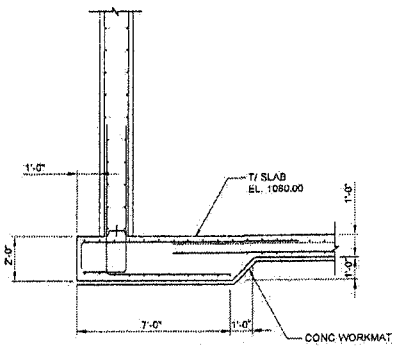

SECTION 3/S3
SCALE: 3/16" = 1'-0"

Registered Professional Engineer (Civil)
CERTIFICATE NO. 33441
BRIAN P. McBRIDE
Date Signed 6-2-08
ARIZONA U.S.A.
Expires 03/31/11

NO	DATE	BY	REVISION DESCRIPTION

GLOBAL WATER
RELIABLE · RENEWABLE · REUSABLE
21410 N. 19th Ave. · Ste. 201 · Phoenix, AZ 85027
Ph: 623.580.9600 · Fax: 623.580.9669
www.gwresources.com

HASSAYAMPA NORTHEAST
CAMPUS 1 WATER
RECLAMATION FACILITY

McBride Engineering Solutions, Inc.
6100 West Gila Springs Pl., Suite 7
Chandler, AZ. 85226
Phone: (480) 759-9608

STRUCTURAL REQUIREMENTS
SECTIONS

DESIGNED: MJA/DMK
DRAWN: MG/KPB CHECKED: BPM
DATE: 05-30-08
DWG. NO. S8
SHEET 15 OF 51

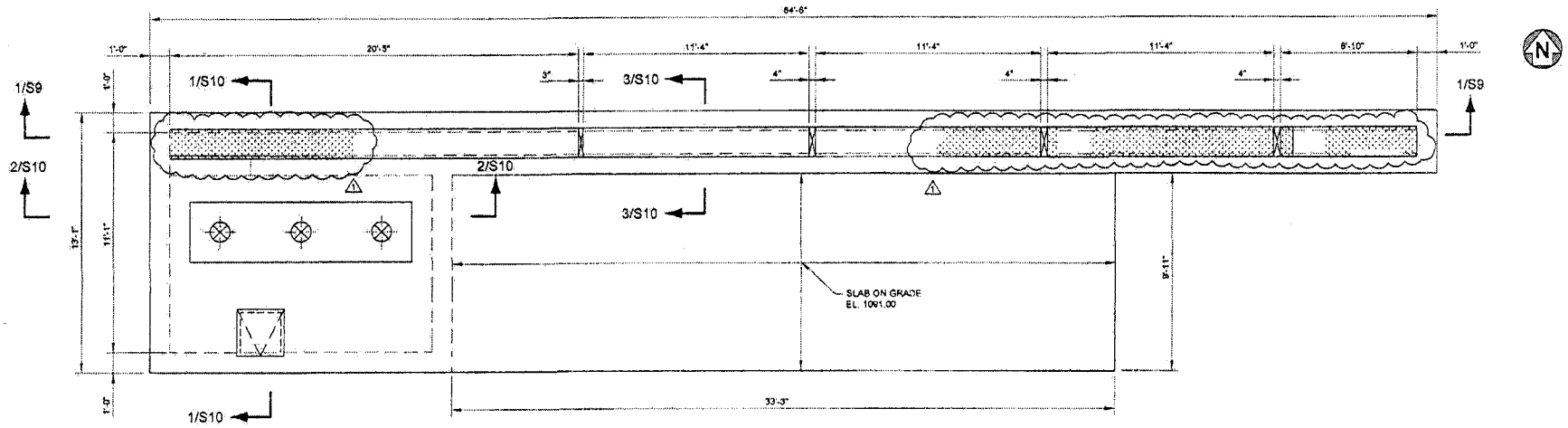

TOP PLAN
SCALE: 3/16" = 1'-0"

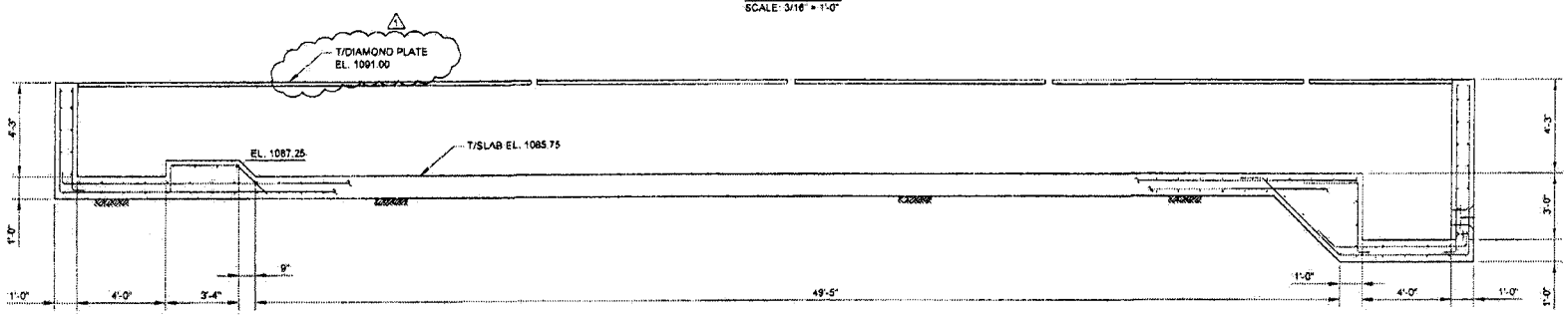

SECTION 1/S9
SCALE: 3/16" = 1'-0"

Registered Professional Engineer (Civil)
CERTIFICATE NO. 33441
BRIAN P. McBRIDE
Date Signed
ARIZONA, U.S.A.
Expires 03/31/11

NO.	DATE	BY	REVISION DESCRIPTION
1	6-30-08	MG	PER MCESD REVIEW COMMENTS 6-30-08

GLOBAL WATER
RELIABLE · RENEWABLE · REUSABLE
21410 N. 19th Ave. · Ste. 201 · Phoenix, AZ 85027
Ph: 623.580.9600 · Fx: 623.580.9669
www.gwresources.com

HASSAYAMPA NORTHEAST CAMPUS 1 WATER RECLAMATION FACILITY

McBride Engineering Solutions, Inc.
6100 West Gila Springs Pl., Suite 7
Chandler, AZ. 85226
Phone: (480) 759-9608

STRUCTURAL REQUIREMENTS ULTRAVIOLET DISINFECTION AND TERTIARY PUMP STATION PLANS AND DETAILS

DESIGNED: MJA/DMK
DRAWN: MG/KPB | CHECKED: BPM
DATE: 06-30-08
DWG. NO. S9
SHEET 16 OF 81

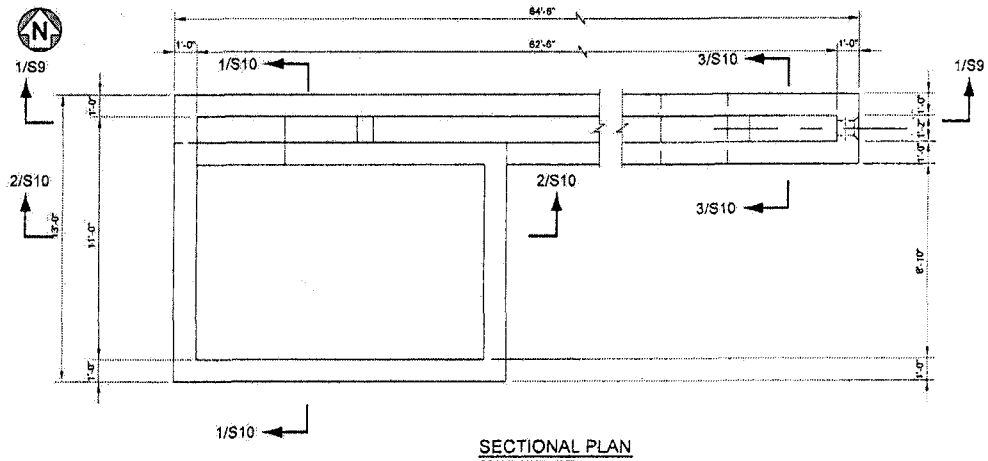

SECTIONAL PLAN
SCALE: 3/16" = 1'-0"

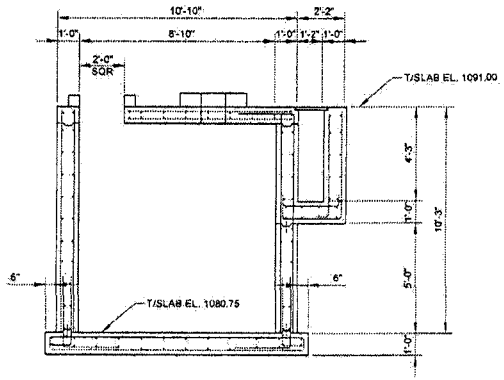

SECTION 1/S10
SCALE: 3/16" = 1'-0"

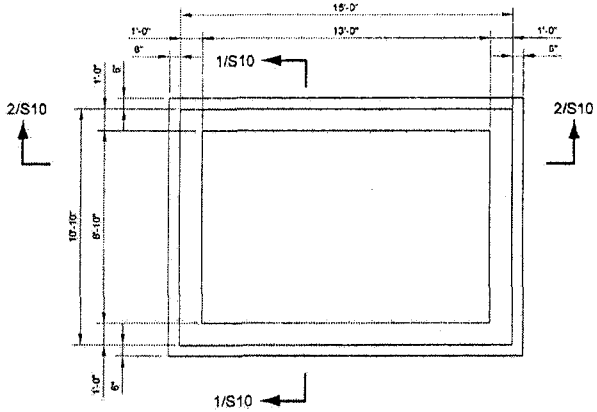

BASE PLAN
SCALE: 3/16" = 1'-0"

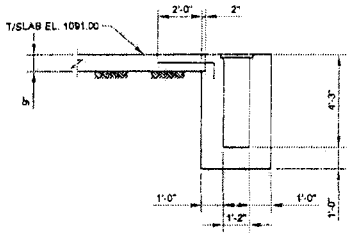

SECTION 3/S10
SCALE: 3/16" = 1'-0"

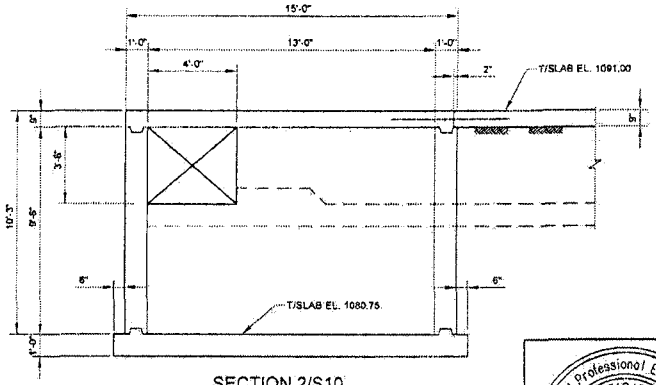

SECTION 2/S10
SCALE: 3/16" = 1'-0"

Registered Professional Engineer (Civil)
CERTIFICATE NO. 33441
BRIAN P. McBRIDE
Date Signed 6-2-08
ARIZONA U.S.A.
Expires 03/31/11

NO.	DATE	BY	REVISION DESCRIPTION

GLOBAL WATER
RELIABLE · RENEWABLE · REUSABLE
21410 N. 19th Ave. · Ste. 201 · Phoenix, AZ 85027
Ph: 623.580.9600 · Fx: 623.580.9659
www.gwrdsu/cas.com

HASSAYAMPA NORTHEAST CAMPUS 1 WATER RECLAMATION FACILITY

McBride Engineering Solutions, Inc.
6100 West Gila Springs Pl., Suite 7
Chandler, AZ. 85226
Phone: (480) 759-9608

STRUCTURAL REQUIREMENTS ULTRAVIOLET DISINFECTION AND TERTIARY PUMP STATION PLANS AND DETAILS

DESIGNED: MJA/DMK
DRAWN: MGK/PB CHECKED: BPM
DATE: 05-30-08
DWG. NO. S10
SHEET 17 OF 01

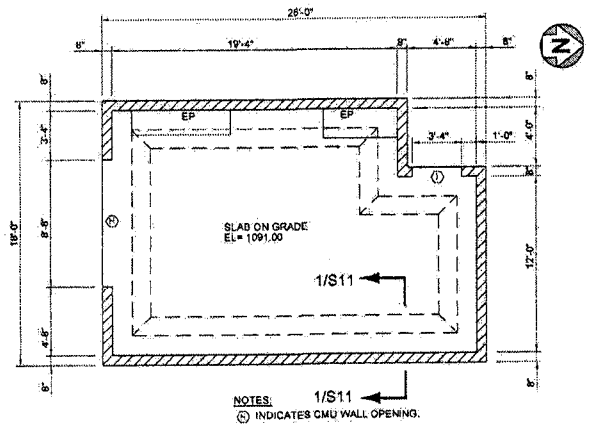

NOTES:
(N) INDICATES CMU WALL OPENING.

MAINTENANCE BUILDING SECTIONAL PLAN

SCALE: 1/8" = 1'-0"

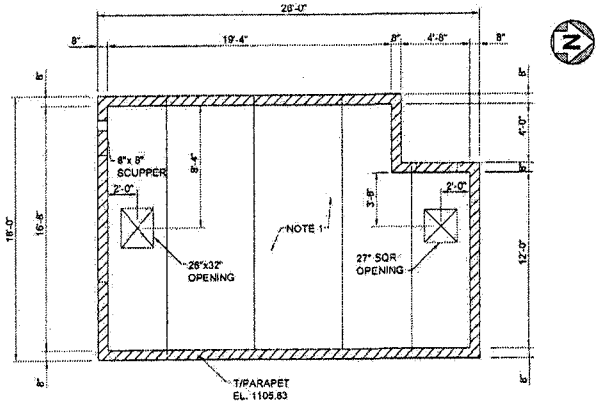

NOTES:
1. 1.5 METAL DECK (20 GA MIN) WITH TAPPERED RIGID INSULATION AND 3 PLY ROOFING.
2. REQUIRED ROOF LIVE LOAD = 20 PSF.

MAINTENANCE BUILDING ROOF PLAN

SCALE: 1/8" = 1'-0"

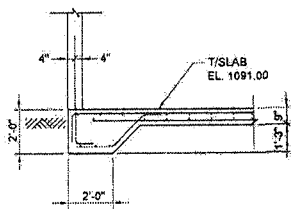

ALTERNATE 1

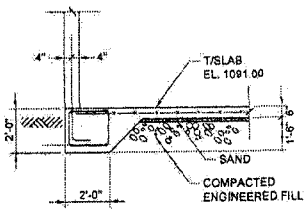

ALTERNATE 2

SECTION 1/S11

SCALE: 3/16" = 1'-0"

Registered Professional Engineer (Civil)
CERTIFICATE NO. 33441
BRIAN P. McBRIDE
Date Signed 6-2-08
ARIZONA U.S.A.
Expires 03/31/11

NO.	DATE	BY	REVISION DESCRIPTION

GLOBAL WATER
RELIABLE · RENEWABLE · REUSABLE
21410 N. 19th Ave. · Ste. 201 · Phoenix, AZ 85027
Ph: 623.580.9000 · Fx: 623.580.9059
www.gwresources.com

HASSAYAMPA NORTHEAST CAMPUS 1 WATER RECLAMATION FACILITY

McBride Engineering Solutions, Inc.
6100 West Gila Springs Pl., Suite 7
Chandler, AZ. 85226
Phone: (480) 759-9608

STRUCTURAL REQUIREMENTS
MAINTENANCE BUILDING
PLANS AND SECTIONS

DESIGNED: MJA/DMK
DRAWN: MGK/PB CHECKED: BPM
DATE: 05-30-08
DWG. NO. S11
SHEET 18 OF 61

VALVE SYMBOLS

DESCRIPTION	SCHEMATIC	THREE LINE	SINGLE LINE
GATE			
NEEDLE			
KNIFE GATE			
BUTTERFLY			
PLUG			
CHECK (SWING)			
CHECK (FOOT VALVE)			
CHECK (BALL VALVE)			
CHECK (DIAPHRAGM)			
CHECK (DUAL DISC)			
CHECK (TILTED DISC)			
CHECK (GLOBE STYLE SILENT)			
BALL			
CONE			
DIAPHRAGM			
GLOBE			
ANGLE			
THREE WAY			
FOUR WAY			
PRESSURE RELIEF			
AUTO AIR AND VACUUM RELEASE	AVR	AVR	AVR
AUTO AIR RELEASE	AR	AR	AR
AUTO VACUUM RELEASE	VR	VR	VR
PRESSURE REDUCING			

VALVE SYMBOLS

DESCRIPTION	SCHEMATIC	THREE LINE	SINGLE LINE
BACK PRESSURE REGULATOR			
HOSE			
STOP AND DRAIN			

PIPE FITTINGS

DESCRIPTION	SCHEMATIC	THREE LINE	SINGLE LINE
CROSS	NA		
CROSS	NA		
TEE	NA		
TEE	NA		
TEE	NA		
SIDE OUTLET TEE	NA		
SIDE OUTLET TEE	NA		
LATERAL	NA		
90° ELBOW	NA		
90° ELBOW	NA		
90° ELBOW	NA		
90° ELBOW (LONG RADIUS)	NA	LR	LR
45° ELBOW	NA		
45° ELBOW	NA		
45° ELBOW	NA		
45° ELBOW (LONG RADIUS)	NA	LR	LR
SIDE OUTLET ELBOW	NA		

PIPE FITTINGS

DESCRIPTION	SCHEMATIC	THREE LINE	SINGLE LINE
SIDE OUTLET ELBOW	NA		
BASE ELBOW	NA		
UNION (SCREWED)			
REDUCER			
REDUCER - ECCENTRIC (OFFSET VIEW)	NA		
BLIND FLANGE			
SLEEVE TYPE COUPLING			
SLEEVE TYPE COUPLING (HARNESSED)	H	H	H
GROOVED TYPE COUPLING	GC	GC	GC
EXPANSION JOINT RUBBER BELLOWS TYPE			
EXPANSION JOINT METAL BELLOWS TYPE			
VENTURI METER			
METER	M	M	M
AIR METER	AM	AM	AM
STRAINER			
LUBE OIL FILTER		NA	
VENT			
THERMOSTAT (TEMPERATURE REGULATOR)			
PRESSURE GAUGE			
THERMOMETER			
WATER LEVEL ALARM	HWL OR LWL	HWL OR LWL	HWL OR LWL
DIFFERENTIAL PRESSURE GAUGE			

PIPE FITTINGS

DESCRIPTION	SCHEMATIC	THREE LINE	SINGLE LINE
FLANGE COUPLING ADAPTER			
PRESSURE SWITCH	PS	PS	PS

PIPE JOINTS

DESCRIPTION	SCHEMATIC	THREE LINE	SINGLE LINE
FLANGE	NA		
MECHANICAL JOINT	NA		
MECHANICAL JOINT (RESTRAINED)	NA	R	R
PUSH ON OR BELL AND SPIGOT	NA		
PUSH ON OR BELL AND SPIGOT (RESTRAINED)	NA	R	R
WELDED	NA		NA
SCREWED	NA		
JOINT IN CONCRETE PIPE	NA		NA
GROOVED	NA		NA
MECHANICAL JOINT	NA		NA

WALL FITTINGS

DESCRIPTION	SCHEMATIC	THREE LINE	SINGLE LINE
WALL SLEEVE (CAULKED)	NA		
WALL SLEEVE (ANNULAR TYPE SEAL)	NA		
WALL SLEEVE (MECHANICAL JOINT)	NA		
FLANGE AND FLANGE WALL PIPE WITH INTERMEDIATE COLLAR (F x F x F)	NA		
BELL AND BELL WALL PIPE WITH INTERMEDIATE COLLAR (B x F x B)	NA		
MECHANICAL JOINT AND MECHANICAL JOINT WALL PIPE WITH INTERMEDIATE COLLAR (MJ x F x MJ)	NA		
BELL AND FLANGE WALL PIPE WITH INTERMEDIATE COLLAR (B x F x F)	NA		
MECHANICAL JOINT AND FLANGE WALL PIPE WITH INTERMEDIATE COLLAR (MJ x F x F)	NA		
STEEL WALL RING FOR MECHANICAL JOINT AND CONCRETE PIPE (RUBBER AND STEEL)	NA		NA

PIPING SERVICE ABBREVIATIONS

BWW	BACKWASH WATER
CEN	CENTRATE
D	DRAIN
DS	DIGESTED SLUDGE
FA	FOUL AIR
FE	FILTER EFFLUENT
FI	FILTER INFLUENT
NaOCl	SODIUM HYPOCHLORITE
NaOH	SODIUM HYDROXIDE
NPW	NONPOTABLE WATER
OF	OVERFLOW
PA	PROCESS AIR
PD	PROCESS DRAIN
PI	PLANT INFLUENT
POL	POLYMER
PW	POTABLE WATER
SE	SECONDARY EFFLUENT
SI	SCREENED INFLUENT
SP	SUPERNATANT
SPD	SUMP DISCHARGE
SPW	SOFTENED POTABLE WATER
STR	STORAGE TANK RECYCLE
TE	TERTIARY EFFLUENT
WAS	WASTE ACTIVATED SLUDGE
WWW	WASTE WASH WATER

VALVE OPERATORS

- PLACE KEY FOR OPERATOR IN PLACE OF *

NONE MANUAL
C CHAINWHEEL
D DIAPHRAGM
F FLOAT
G GEAR
H HYDRAULIC CYLINDER
M MOTOR (ELECTRIC)
P PNEUMATIC CYLINDER
S SOLENOID
A AIR MOTOR
N NUT

NOTES:

1. THIS IS A GENERAL LEGEND PROVIDED TO FACILITATE USE OF THE DRAWINGS. REFER TO THE DRAWINGS FOR ITEMS REQUIRED.
2. VALVES AND PIPE FITTINGS ARE SHOWN WITH FLANGED JOINTS. ITEMS ARE AVAILABLE WITH VARIOUS JOINTS AND ARE SHOWN AS REQUIRED.
3. NA MEANS NOT APPLICABLE.

Registered Professional Engineer (Civil)
CERTIFICATE NO. 33441
BRIAN P. McBRIDE
Date Signed 6-2-08
ARIZONA, U.S.A.
Expires 03/31/11

NO.	DATE	BY	REVISION DESCRIPTION

GLOBAL WATER
RELIABLE · RENEWABLE · REUSABLE
21410 N. 19th Ave. · Ste. 201 · Phoenix, AZ 85027
Ph: 623.580.9600 · Fx: 623.580.9659
www.gwresources.com

HASSAYAMPA NORTHEAST CAMPUS 1 WATER RECLAMATION FACILITY

McBride Engineering Solutions, Inc.
6100 West Gila Springs Pl., Suite 7
Chandler, AZ. 85226
Phone: (480) 759-9608

MECHANICAL LEGEND

DESIGNED: MJA/DMK
DRAWN: MGK/PB CHECKED: BPM
DATE: 05-30-08
DWG. NO. M1
SHEET 19 OF 61

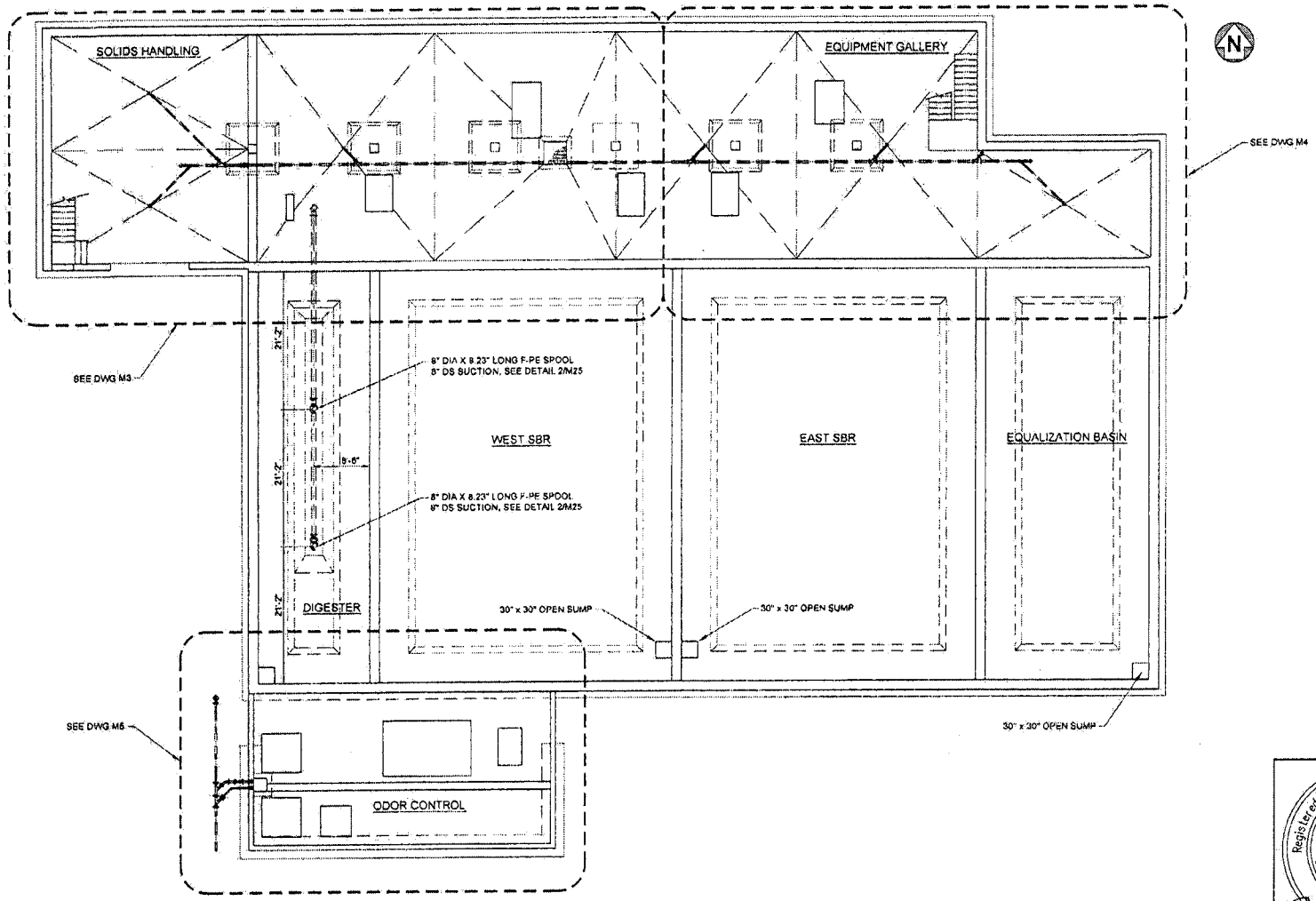

SECTIONAL PLAN
SCALE: 1/16" = 1'-0"

Registered Professional Engineer (Civil)
CERTIFICATE NO. 33441
BRIAN P. McBRIDE
Date Signed 6-2-08
ARIZONA, U.S.A.
Expires 03/31/11

NO.	DATE	BY	REVISION DESCRIPTION

GLOBAL WATER
RELIABLE · RENEWABLE · REUSABLE
21410 N. 19th Ave. · Ste. 201 · Phoenix, AZ 85027
Ph: 623.580.9600 · Fx: 623.580.9609
www.gwresources.com

HASSAYAMPA NORTHEAST CAMPUS 1 WATER RECLAMATION FACILITY

McBride Engineering Solutions, Inc.
6100 West Gila Springs Pl., Suite 7
Chandler, AZ. 85226
Phone: (480) 759-9608

MAIN PROCESS STRUCTURE SECTIONAL PLAN

DESIGNED: MJA/DMK
DRAWN: MG/NPB | CHECKED: BPM
DATE: 05-30-08
DWG. NO. M2
SHEET 20 OF 81

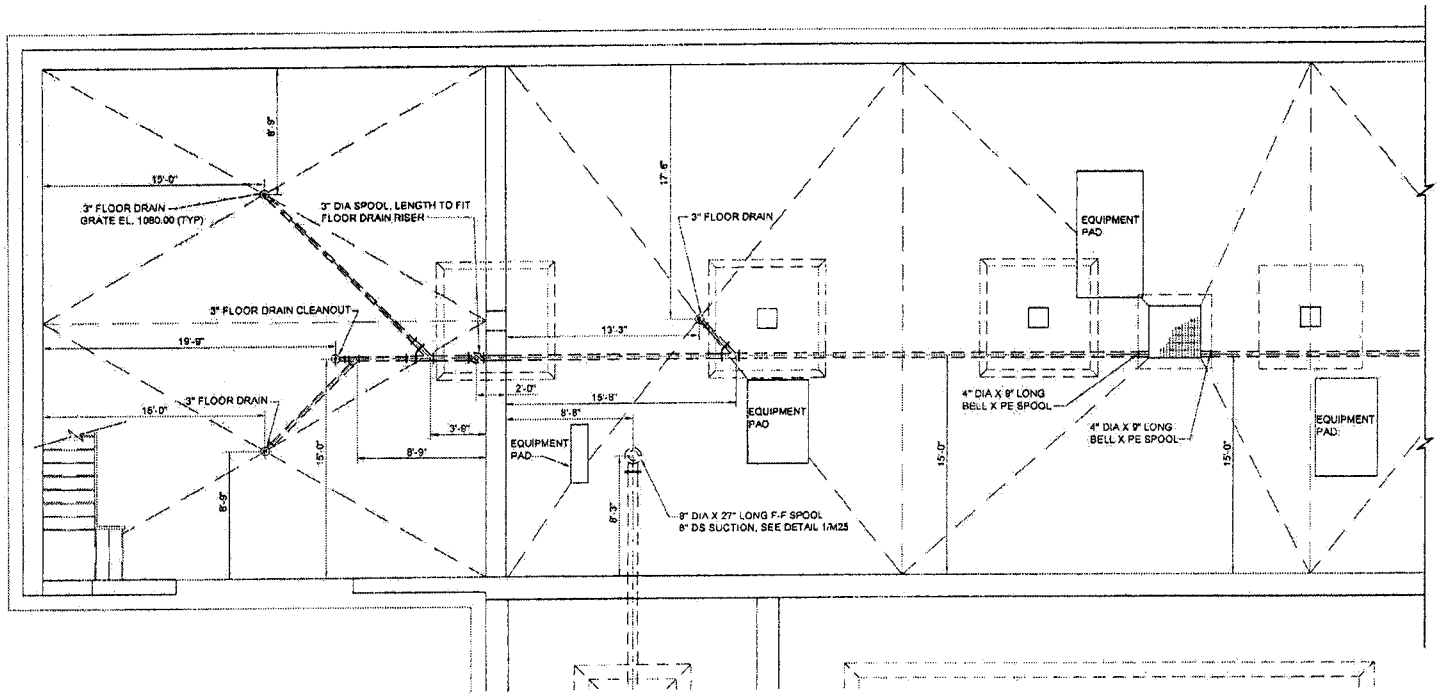

SECTIONAL PLAN
SCALE: 1/8" = 1'-0"

Registered Professional Engineer (Civil)
CERTIFICATE NO. 33441
BRIAN P. McBRIDE
Date Signed 6-2-08
ARIZONA U.S.A.
Expires 03/31/11

NO	DATE	BY	REVISION DESCRIPTION

GLOBAL WATER
RELIABLE · RENEWABLE · REUSABLE
21410 N. 19th Ave. · Ste. 201 · Phoenix, AZ 85027
Ph: 623.580.9000 · Fx: 623.580.9009
www.gwresources.com

HASSAYAMPA NORTHEAST
CAMPUS 1 WATER
RECLAMATION FACILITY

McBride Engineering Solutions, Inc.
6100 West Gila Springs Pl., Suite 7
Chandler, AZ. 85226
Phone: (480) 759-9608

MAIN PROCESS STRUCTURE
SECTIONAL PLAN

DESIGNED: MJJ/DMK
DRAWN: MG/KPB CHECKED: BPM
DATE: 05-30-08
DWG. NO. M3
SHEET 21 OF 61

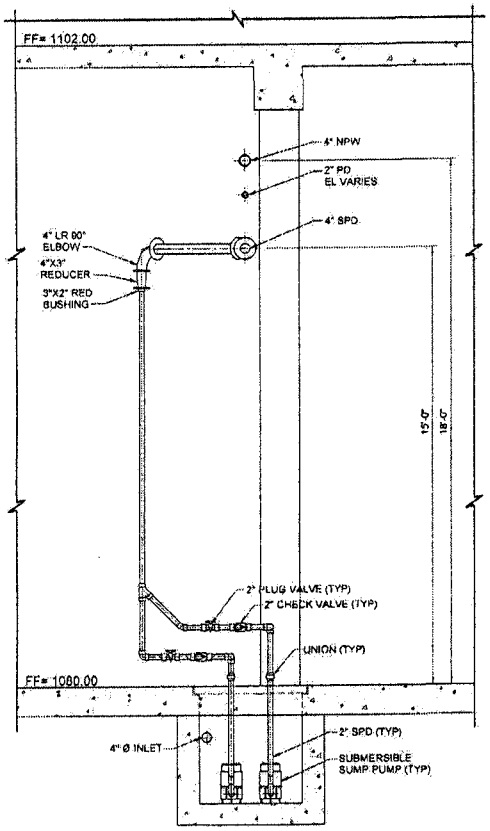

SECTION 1/M4
SCALE: 1/4" = 1'-0"

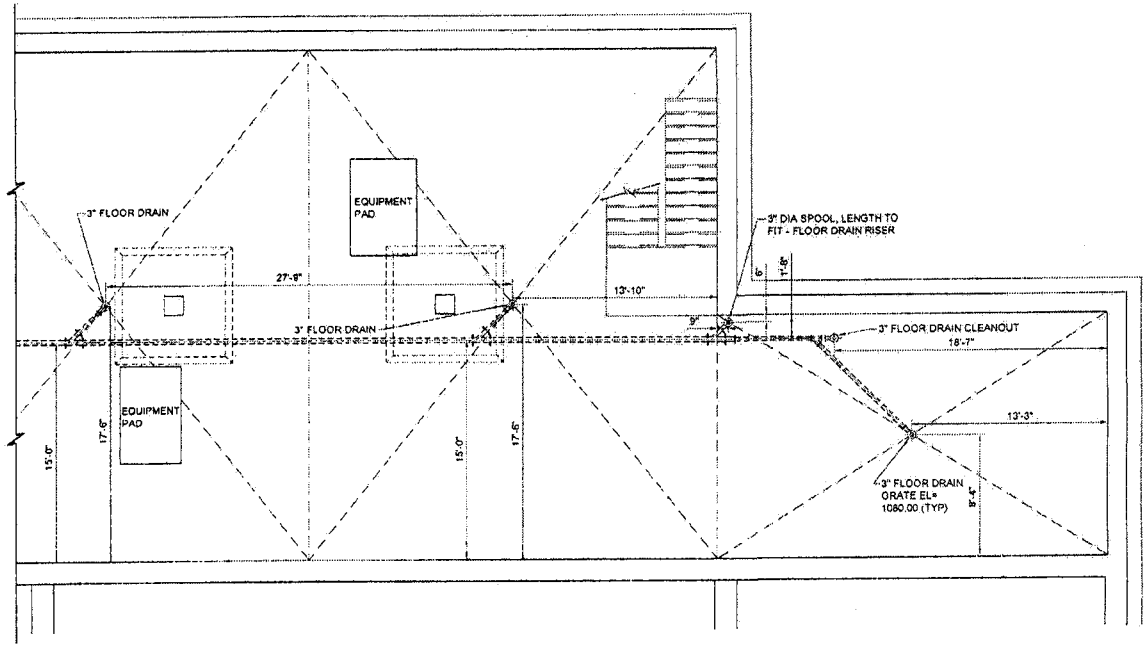

SECTIONAL PLAN
SCALE: 1/8" = 1'-0"

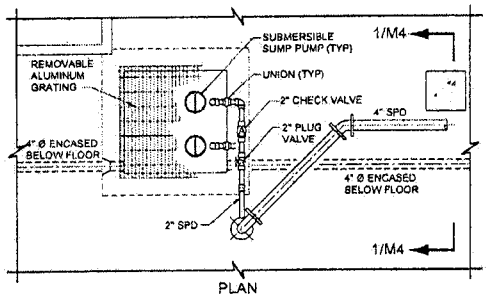

DETAIL 1/M4 - FLOOR DRAIN SUMP
SCALE: 1/4" = 1'-0"

Registered Professional Engineer (Civil)
CERTIFICATE NO.
33441
BRIAN P.
McBRIDE
Date Signed 6-2-08
ARIZONA U.S.A.
Expires 03/31/11

NO.	DATE	BY	REVISION DESCRIPTION

GLOBAL WATER
RELIABLE · RENEWABLE · REUSABLE
21410 N. 19th Ave. · Ste. 201 · Phoenix, AZ 85027
Ph: 623.580.9600 · Fx: 623.580.9609
www.gwresources.com

HASSAYAMPA NORTHEAST
CAMPUS 1 WATER
RECLAMATION FACILITY

McBride Engineering Solutions, Inc.
6100 West Gila Springs Pl., Suite 7
Chandler, AZ. 85226
Phone: (480) 759-9608

MAIN PROCESS STRUCTURE
SECTIONAL PLAN, SECTION
AND DETAIL

DESIGNED: MJ/VDMK
DRAWN: MGK/PB CHECKED: BPM
DATE: 05-30-08
DWG. NO. M4
SHEET 22 OF 61

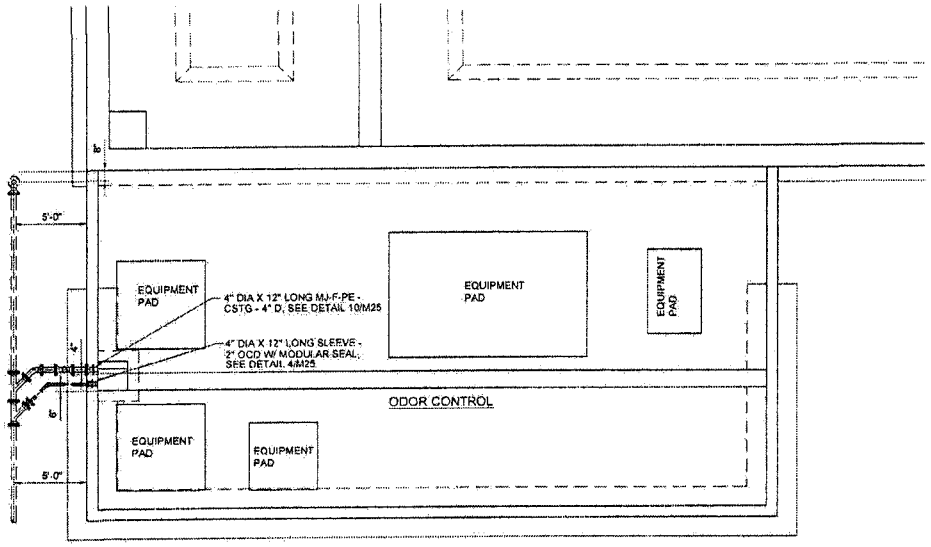

SECTIONAL PLAN

SCALE: 1/8" = 1'-0"

Registered Professional Engineer (Civil)
CERTIFICATE NO. 33441
BRIAN P. McBRIDE
Date Signed 6-2-09
ARIZONA, U.S.A.

Expires 03/31/11

NO.	DATE	BY	REVISION DESCRIPTION

GLOBAL WATER
RELIABLE · RENEWABLE · REUSABLE
21410 N. 19th Ave., Ste. 201 · Phoenix, AZ 85027
Ph: 623.580.9600 · Fx: 623.580.9689
www.gwresources.com

HASSAYAMPA NORTHEAST CAMPUS 1 WATER RECLAMATION FACILITY

McBride Engineering Solutions, Inc.
6100 West Gila Springs Pl., Suite 7
Chandler, AZ 85226
Phone: (480) 759-9608

MAIN PROCESS STRUCTURE SECTIONAL PLAN

DESIGNED: MJA/DMK
DRAWN: MG/KPB | CHECKED: BPM
DATE: 05-30-09
DWG. NO. M5
SHEET 23 OF 61

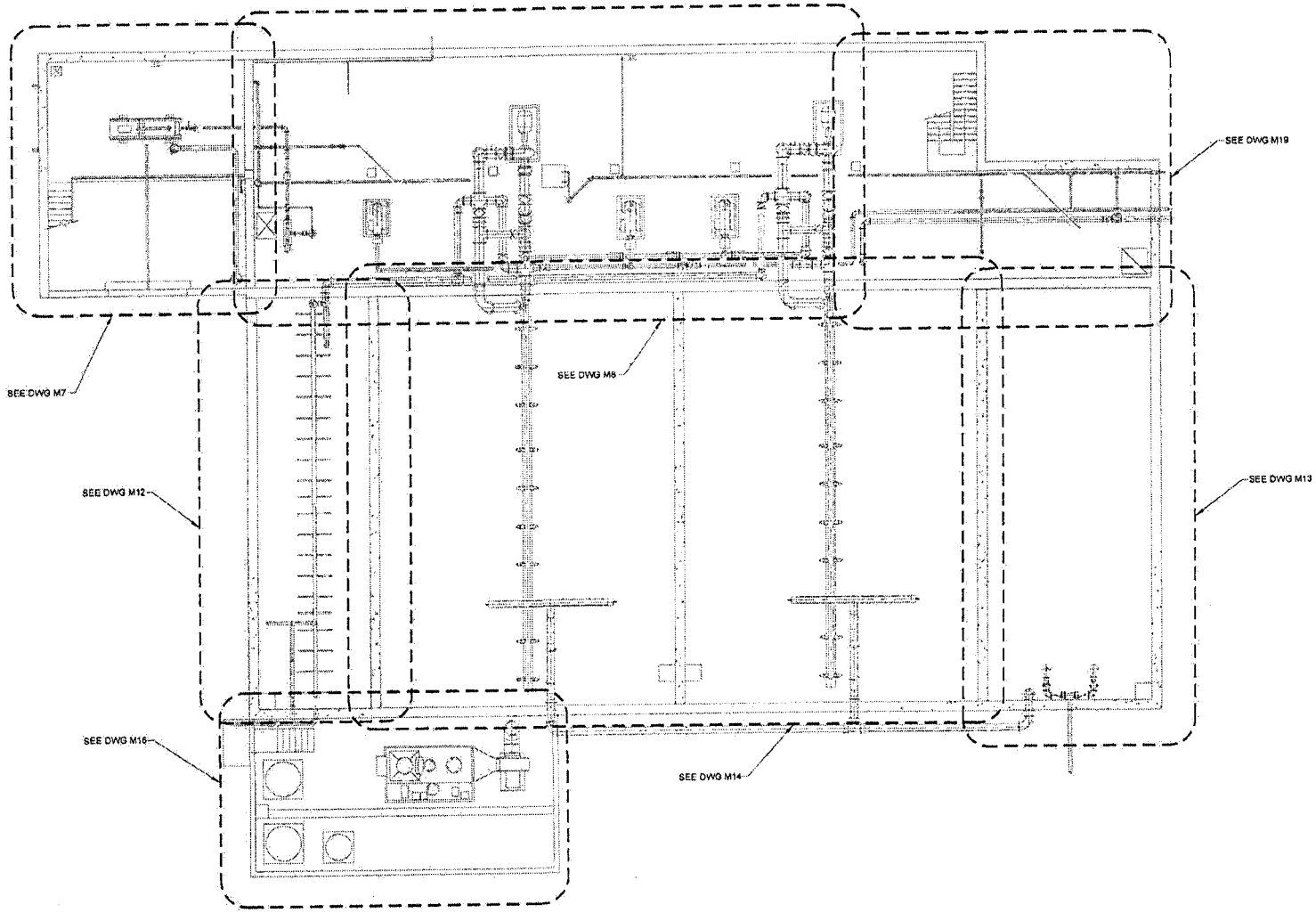

SECTIONAL PLAN
SCALE: 1/10" = 1'-0"

Registered Professional Engineer (Civil)
CERTIFICATE NO. 33441
BRIAN P. McBRIDE
Date Signed 5-2-08
ARIZONA, U.S.A.
Expires 03/31/11

NO.	DATE	BY	REVISION DESCRIPTION

GLOBAL WATER
RELIABLE · RENEWABLE · REUSABLE
21410 N. 19th Ave. · Ste. 201 · Phoenix, AZ 85027
Ph: 623.580.9600 · Fx: 623.580.9659
www.gwresources.com

HASSAYAMPA NORTHEAST CAMPUS 1 WATER RECLAMATION FACILITY

McBride Engineering Solutions, Inc.
6100 West Gila Springs Pl., Suite 7
Chandler, AZ. 85226
Phone: (480) 759-9608

MAIN PROCESS STRUCTURE SECTIONAL PLAN

DESIGNED: MJA/DMK
DRAWN: MG/KPB | CHECKED: BPM
DATE: 05-30-08
DWG. NO. M6
SHEET 24 OF 61

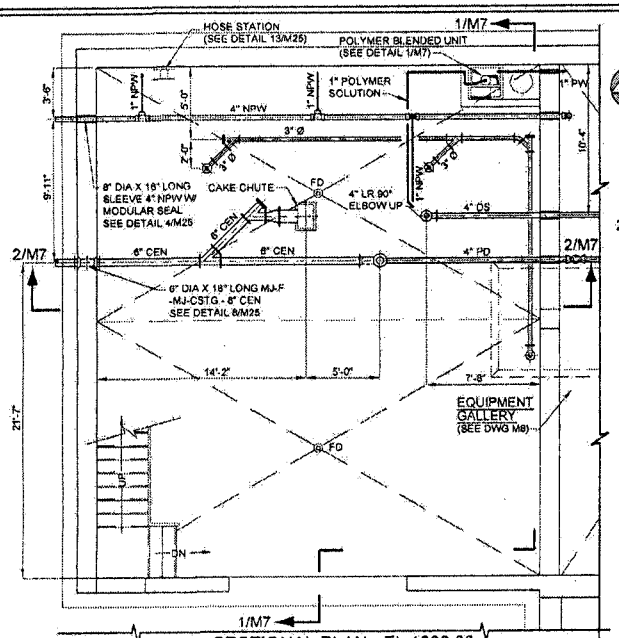

SECTIONAL PLAN - EL 1086.00
SCALE: 1/8" = 1'-0"

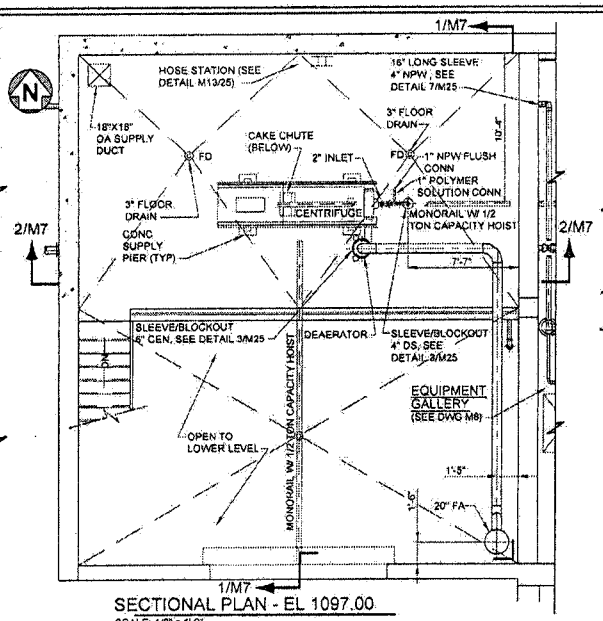

SECTIONAL PLAN - EL 1097.00
SCALE: 1/8" = 1'-0"

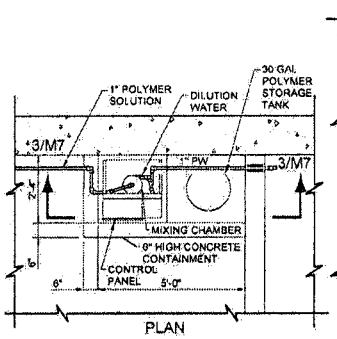

DETAIL 1/M7 - POLYMER BLENDING UNIT
SCALE: 1/4" = 1'-0"

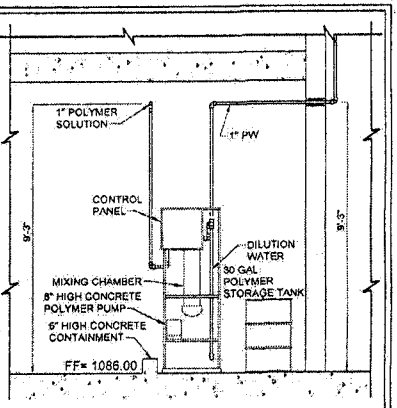

SECTION- 3/M7
SCALE: 1/4" = 1'-0"

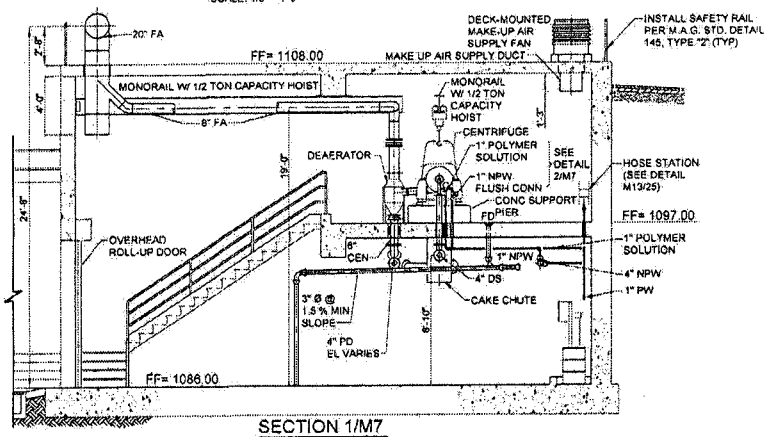

SECTION 1/M7
SCALE: 1/8" = 1'-0"

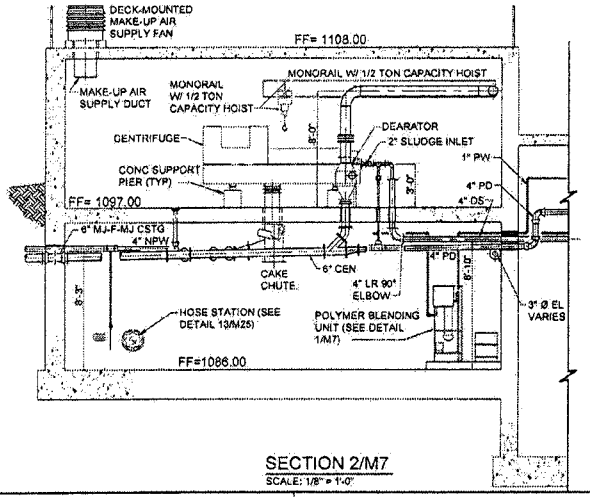

SECTION 2/M7
SCALE: 1/8" = 1'-0"

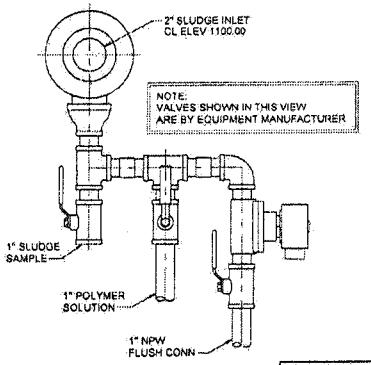

ELEVATION LOOKING WEST

DETAIL 2/M7 - CENTRIFUGE INLET CONNECTIONS
SCALE: 1-1/2" = 1'-0"

Registered Professional Engineer (Civil) CERTIFICATE NO. 33441 BRIAN P. McBRIDE Date Signed 6-2-08 ARIZONA, U.S.A.
Expires 03/31/11

NO	DATE	BY	REVISION DESCRIPTION

GLOBAL WATER
RELIABLE · RENEWABLE · REUSABLE
21410 N. 19th Ave. · Ste. 201 · Phoenix, AZ 85027
Ph: 623.580.9600 · Fx: 623.580.9059
www.gwresources.com

HASSAYAMPA NORTHEAST CAMPUS 1 WATER RECLAMATION FACILITY

McBride Engineering Solutions, Inc.
6100 West Gila Springs Pl., Suite 7
Chandler, AZ. 85226
Phone: (480) 759-9608

MAIN PROCESS STRUCTURE SECTIONAL PLAN

DESIGNED: MJA/DMK
DRAWN: MG/KPB CHECKED: DPM
DATE: 05-30-08
DWG. NO. M7
SHEET 25 OF 61

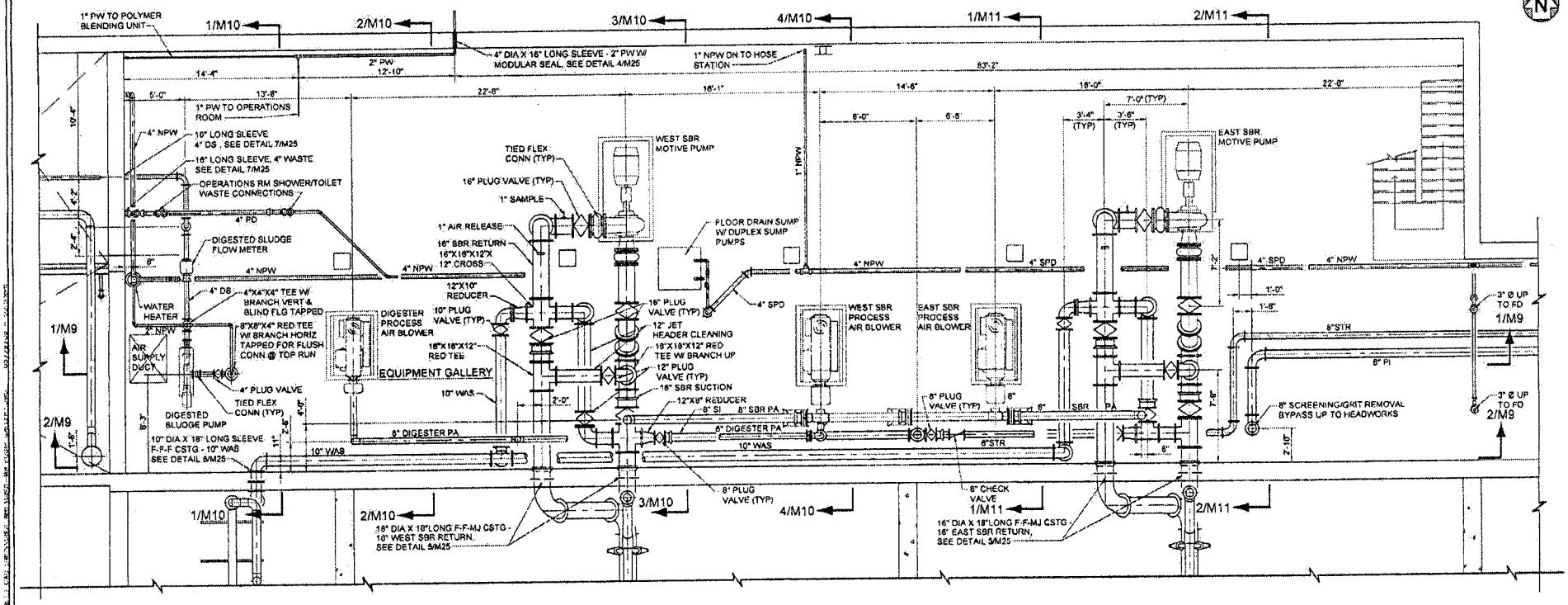

SECTIONAL PLAN
SCALE: 1/8" = 1'-0"

Registered Professional Engineer (Civil)
CERTIFICATE NO. 33441
BRIAN P. McBRIDE
Date Signed 6.2.08
ARIZONA, U.S.A.
Expires 03/31/11

NO.	DATE	BY	REVISION DESCRIPTION

GLOBAL WATER
RELIABLE · RENEWABLE · REUSABLE
21410 N. 19th Ave. - Ste. 201 - Phoenix, AZ 85027
Ph: 623.580.9600 - Fx: 623.580.9609
www.gwresources.com

HASSAYAMPA NORTHEAST CAMPUS 1 WATER RECLAMATION FACILITY

McBride Engineering Solutions, Inc.
6100 West Gila Springs Pl., Suite 7
Chandler, AZ. 85226
Phone: (480) 759-9608

MAIN PROCESS STRUCTURE SECTIONAL PLAN

DESIGNED: MJA/DMK
DRAWN: MG/KPB | CHECKED: BPM
DATE: 05-30-08
DWG. NO. M8
SHEET 26 OF 61

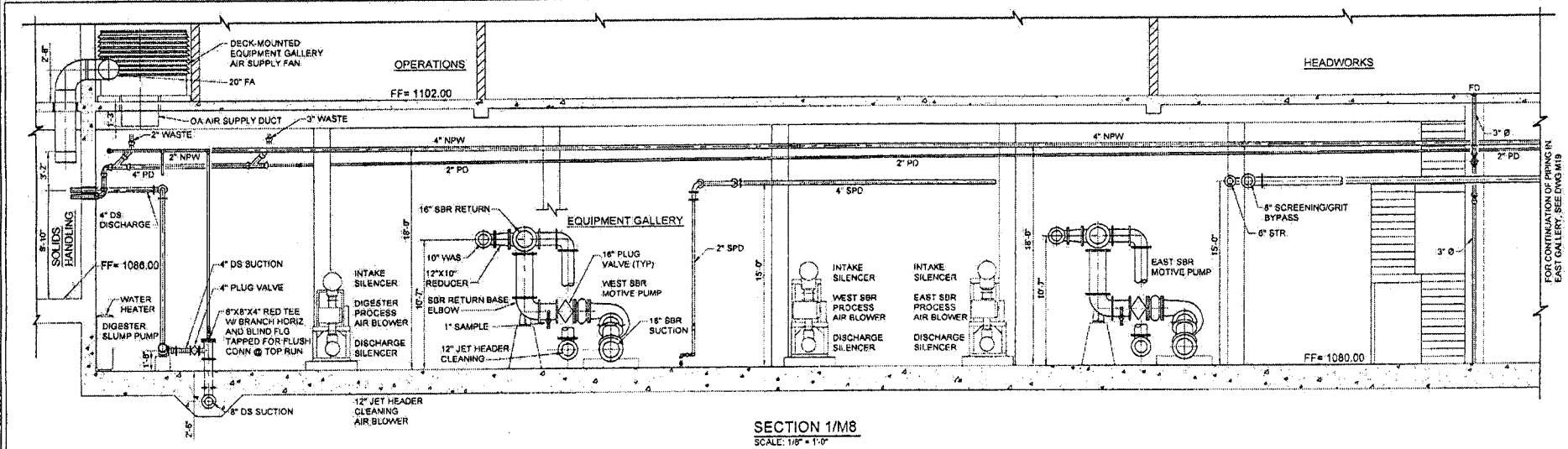

SECTION 1/M8

SCALE: 1/8" = 1'-0"

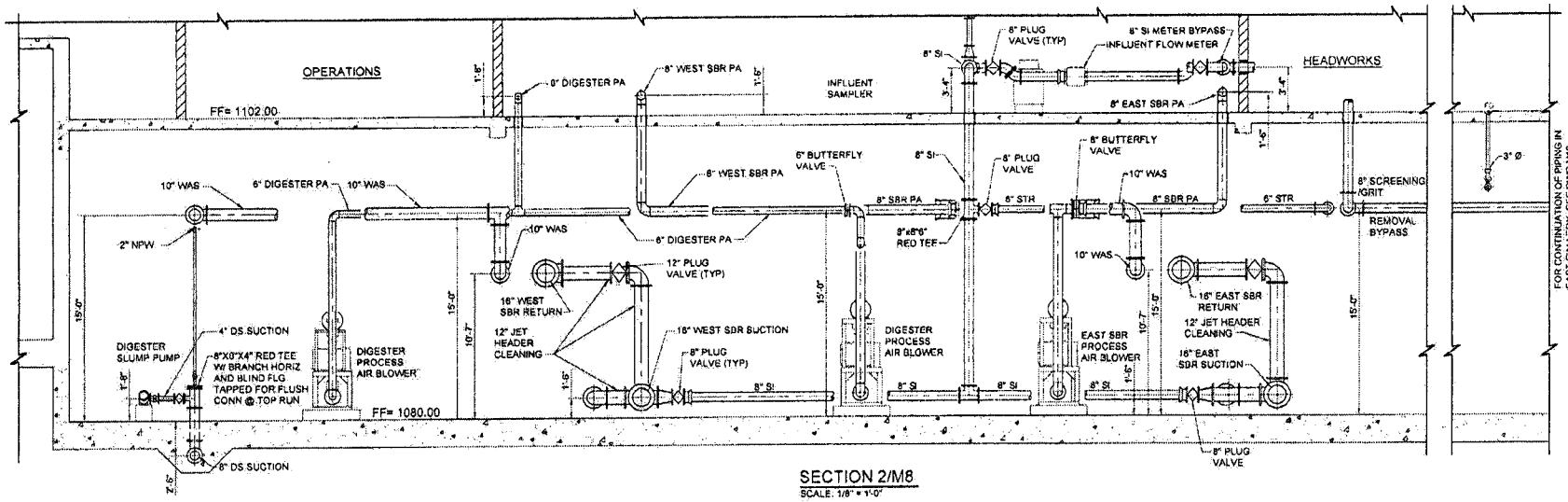

SECTION 2/M8

SCALE: 1/8" = 1'-0"

Registered Professional Engineer (Civil)
CERTIFICATE NO. 33441
BRIAN P. McBRIDE
Date Signed 6-2-08
ARIZONA
Expires 03/31/11

NO.	DATE	BY	REVISION DESCRIPTION

GLOBAL WATER
RELIABLE · RENEWABLE · REUSABLE
21410 N. 19th Ave. · Ste. 201 · Phoenix, AZ 85027
Ph: 623.580.9000 · Fx: 623.580.9669
www.gwresources.com

HASSAYAMPA NORTHEAST CAMPUS 1 WATER RECLAMATION FACILITY

McBride Engineering Solutions, Inc.
6100 West Gila Springs Pl., Suite 7
Chandler, AZ, 85226
Phone: (480) 759-9608

EQUIPMENT GALLERY SECTIONS

DESIGNED: MJA/DMK
DRAWN: MG/KPB CHECKED: BPM
DATE: 05-30-08
DWG. NO. M9
SHEET 27 OF 81

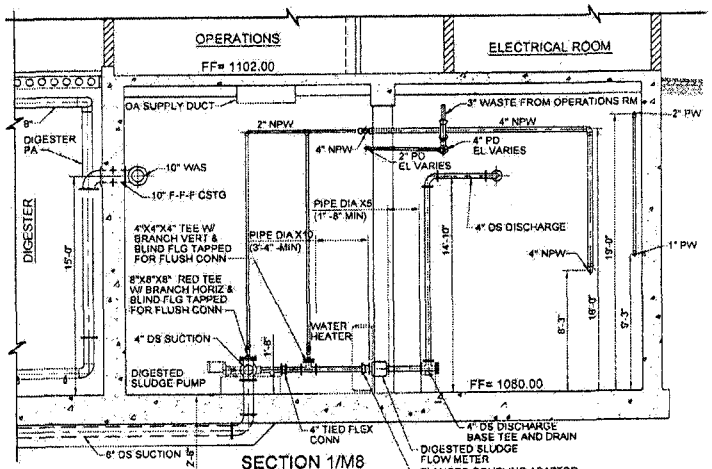

SECTION 1/M8
SCALE: 1/8" = 1'-0"

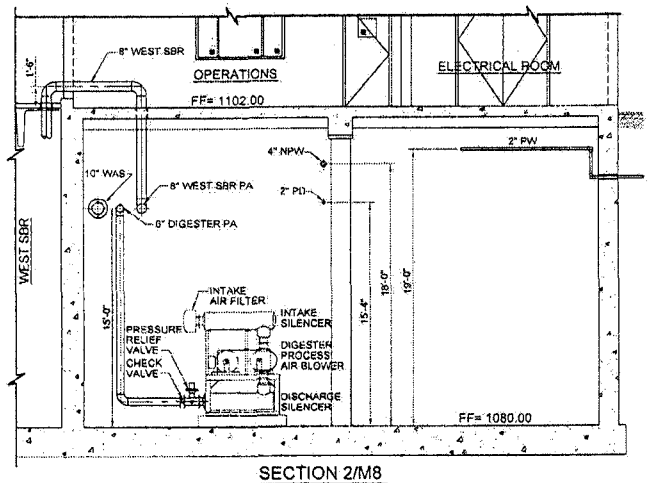

SECTION 2/M8
SCALE: 1/8" = 1'-0"

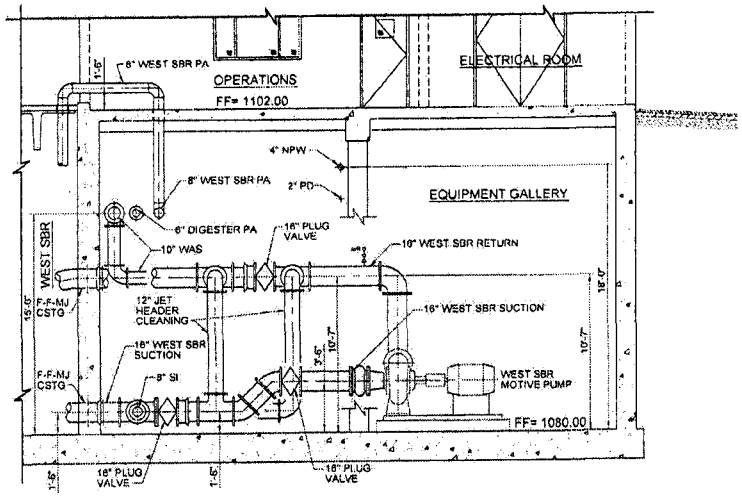

SECTION 3/M8
SCALE: 1/8" = 1'-0"

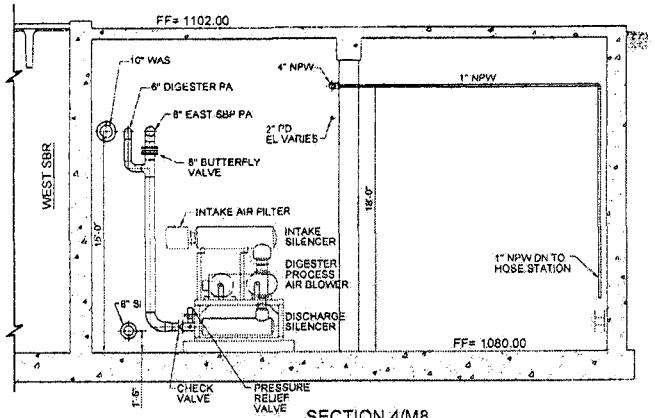

SECTION 4/M8
SCALE: 1/8" = 1'-0"

Registered Professional Engineer (Civil)
CERTIFICATE NO. 33441
BRIAN P. McBRIDE
Date Signed 6-2-08
ARIZONA U.S.A.
Expires 03/31/11

NO	DATE	BY	REVISION DESCRIPTION

GLOBAL WATER
RELIABLE · RENEWABLE · REUSABLE
8140 N. 19th Ave. · Ste. 201 · Phoenix, AZ 85027
Ph: 623.580.9600 · Fx: 623.580.9608
www.gwresources.com

HASSAYAMPA NORTHEAST CAMPUS 1 WATER RECLAMATION FACILITY

McBride Engineering Solutions, Inc.
6100 West Gila Springs Pl., Suite 7
Chandler, AZ. 85226
Phone: (480) 759-9608

EQUIPMENT GALLERY SECTIONS

DESIGNED: MJA/DMK
DRAWN: MG/KPB CHECKED: BPM
DATE: 05-30-08
DWG. NO. M10
SHEET 28 OF 61

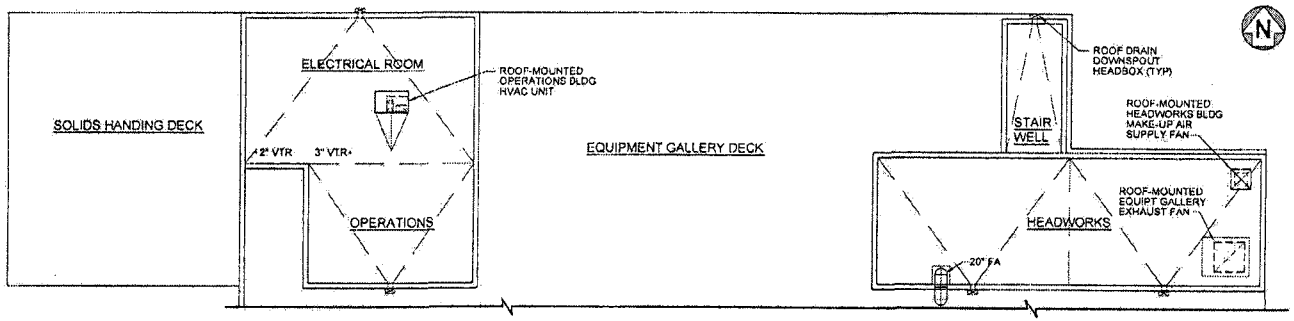

ROOF PLAN - OPERATIONS BUILDING AND HEADWORKS
SCALE: 1/16" = 1'-0"

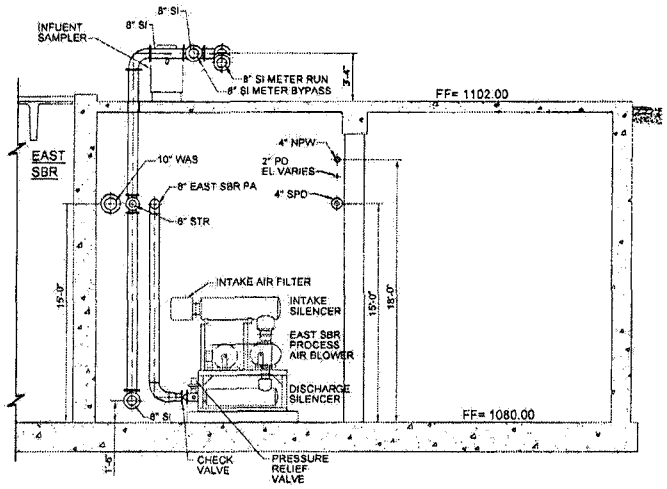

SECTION 1/M8
SCALE: 1/8" = 1'-0"

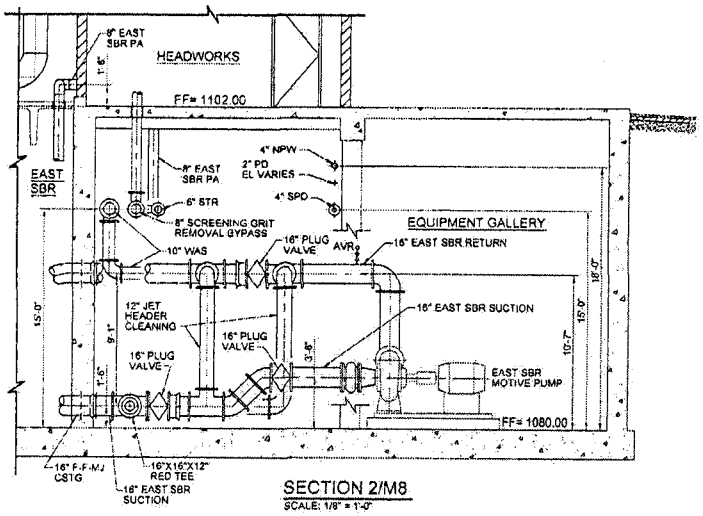

SECTION 2/M8
SCALE: 1/8" = 1'-0"

Registered Professional Engineer (Civil)
CERTIFICATE NO. 33441
BRIAN P. McBRIDE
Date Signed 6-2-08
ARIZONA U.S.A.
Expires 03/31/11

NO.	DATE	BY	REVISION DESCRIPTION

GLOBAL WATER
RELIABLE · RENEWABLE · REUSABLE
21410 N. 19th Ave., Ste. 201 · Phoenix, AZ 85027
Ph: 623.580.9400 · Fx: 623.580.9659
www.gwresources.com

HASSAYAMPA NORTHEAST CAMPUS 1 WATER RECLAMATION FACILITY

McBride Engineering Solutions, Inc.
6100 West Gila Springs Pl., Suite 7
Chandler, AZ. 85226
Phone: (480) 759-9608

OPERATIONS AND HEADWORKS ROOF PLAN EQUIPMENT GALLERY SECTIONS

DESIGNED: MJA/DMK
DRAWN: MG/KPB CHECKED: BPM
DATE: 05-30-08
DWG. NO. M11
SHEET 29 OF 61

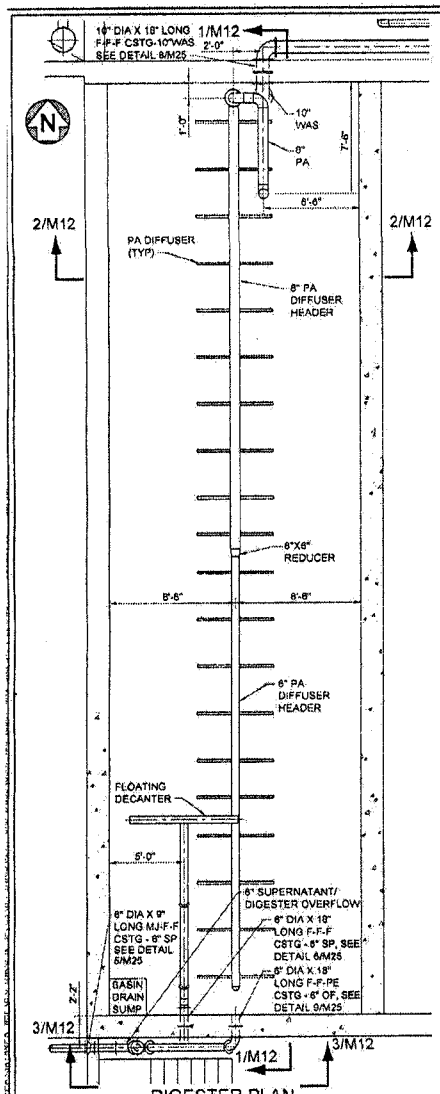

DIGESTER PLAN

SCALE: 1/8" = 1'-0"

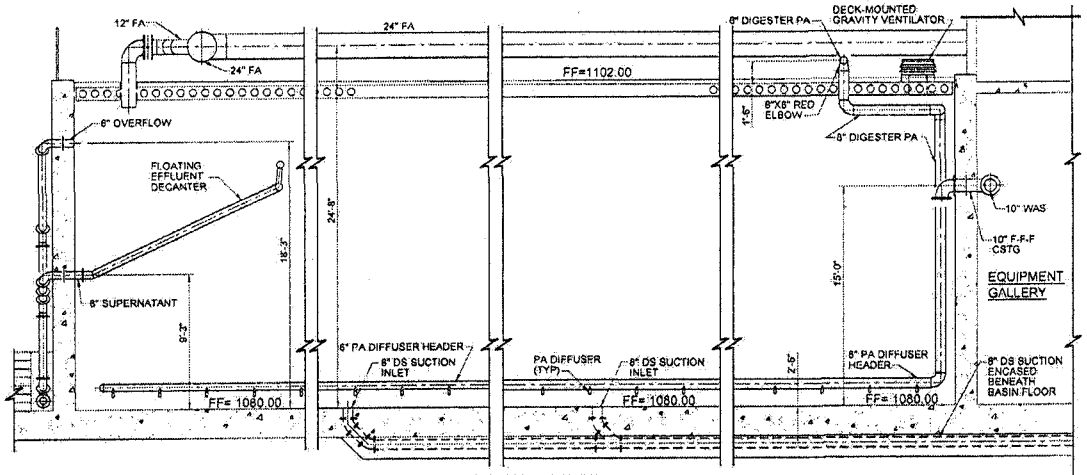

SECTION 1/M12

SCALE: 1/8" = 1'-0"

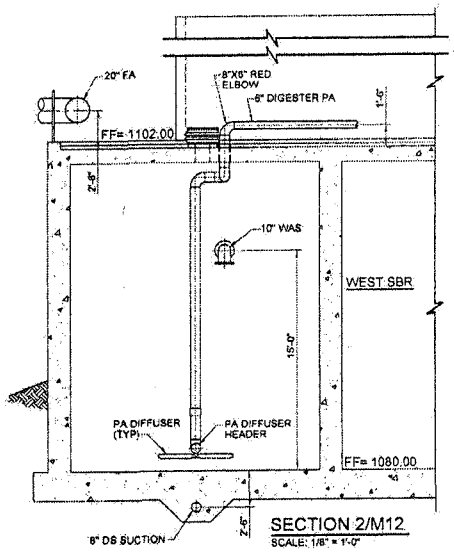

SECTION 2/M12

SCALE: 1/8" = 1'-0"

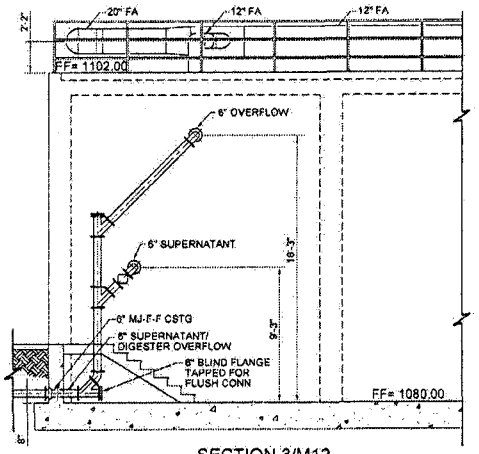

SECTION 3/M12

SCALE: 1/8" = 1'-0"

Registered Professional Engineer (Civil)
CERTIFICATE NO. 33441
BRIAN P. McBRIDE
Date Signed 6.2.08
ARIZONA U.S.A.
Expires 03/31/11

NO.	DATE	BY	REVISION DESCRIPTION

GLOBAL WATER
RELIABLE · RENEWABLE · REUSABLE
21410 N. 19th Ave. · Ste. 201 · Phoenix, AZ 85027
Ph: 623.580.9600 · Fx: 623.580.9656
www.gwresources.com

HASSAYAMPA NORTHEAST CAMPUS 1 WATER RECLAMATION FACILITY

McBride Engineering Solutions, Inc.
6100 West Gila Springs Pl., Suite 7
Chandler, AZ. 85226
Phone: (480) 759-9608

DIGESTER SECTIONAL PLAN AND SECTIONS

DESIGNED: MJA/DMK
DRAWN: MG/KPB CHECKED: BPM
DATE: 05-30-08
DWG. NO. M12
SHEET 30 OF 51

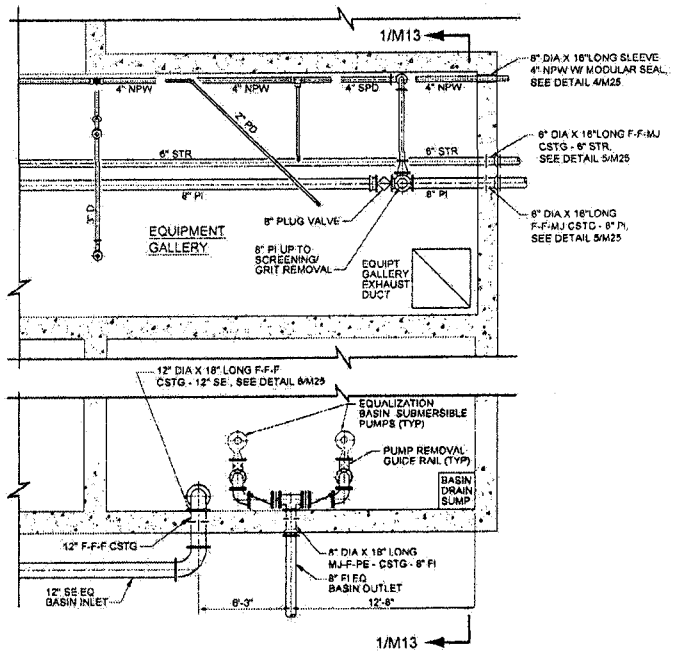

EQUALIZATION BASIN PLAN

SCALE: 1/8" = 1'-0"

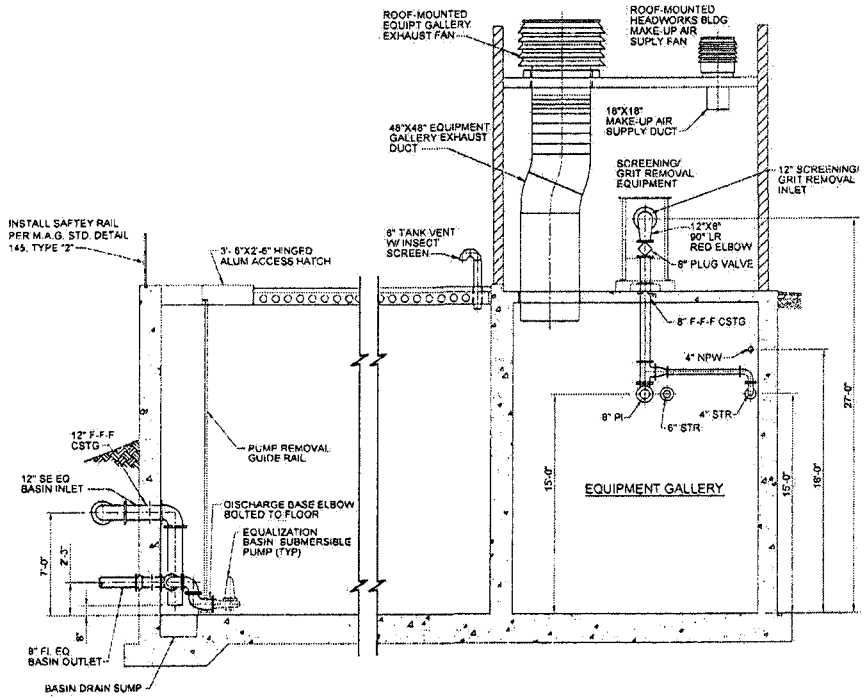

SECTION 1/M13

SCALE: 1/8" = 1'-0"

Registered Professional Engineer (Civil)
CERTIFICATE NO.
33441
BRIAN P.
McBRIDE
Date Signed 6-2-08
ARIZONA U.S.A.
Expires 03/31/11

NO.	DATE	BY	REVISION DESCRIPTION

GLOBAL WATER
RELIABLE · RENEWABLE · REUSABLE
21410 N. 19th Ave. · Ste. 201 · Phoenix, AZ 85027
Ph: 623.580.9600 · Fx: 623.580.9659
www.gwresources.com

HASSAYAMPA NORTHEAST
CAMPUS 1 WATER
RECLAMATION FACILITY

McBride Engineering Solutions, Inc.
6100 West Gila Springs Pl., Suite 7
Chandler, AZ. 85226
Phone: (480) 759-9608

EQUALIZATION BASIN
SECTIONAL PLAN
AND SECTION

DESIGNED: MJA/DMK	
DRAWN: MG/KPB	CHECKED: BPM
DATE: 05-30-08	
DWG. NO.	M13
SHEET 31	OF 61

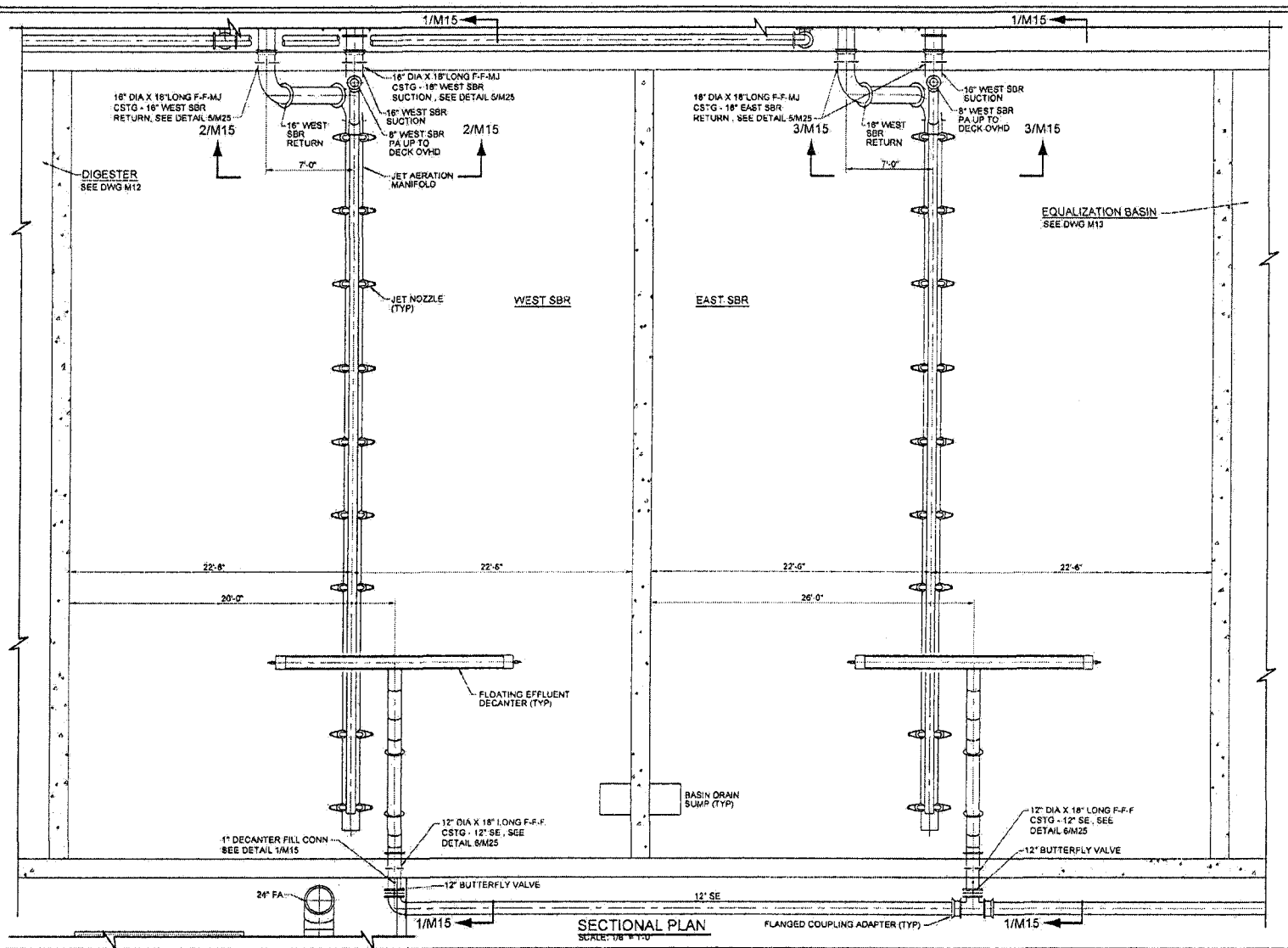

SECTIONAL PLAN
SCALE: 1/8" = 1'-0"

Registered Professional Engineer (Civil)
CERTIFICATE NO. 33441
BRIAN P. McBRIDE
Date Signed 6-2-08
ARIZONA, U.S.A.
Expires 03/31/11

NO.	DATE	BY	REVISION DESCRIPTION

GLOBAL WATER
RELIABLE · RENEWABLE · REUSABLE
21410 N. 19th Ave. · Ste. 201 · Phoenix, AZ 85027
Ph: 623.580.9600 · Fx: 623.580.9669
www.gwresources.com

HASSAYAMPA NORTHEAST CAMPUS 1 WATER RECLAMATION FACILITY

McBride Engineering Solutions, Inc.
6100 West Gila Springs Pl., Suite 7
Chandler, AZ. 85226
Phone: (480) 759-9608

SEQUENCING BATCH REACTORS SECTIONAL PLAN AND SECTIONS

DESIGNED: MJA/DMK
DRAWN: MG/KPB CHECKED: BPM
DATE: 05-30-08
DWG. NO. M14
SHEET 32 OF 61

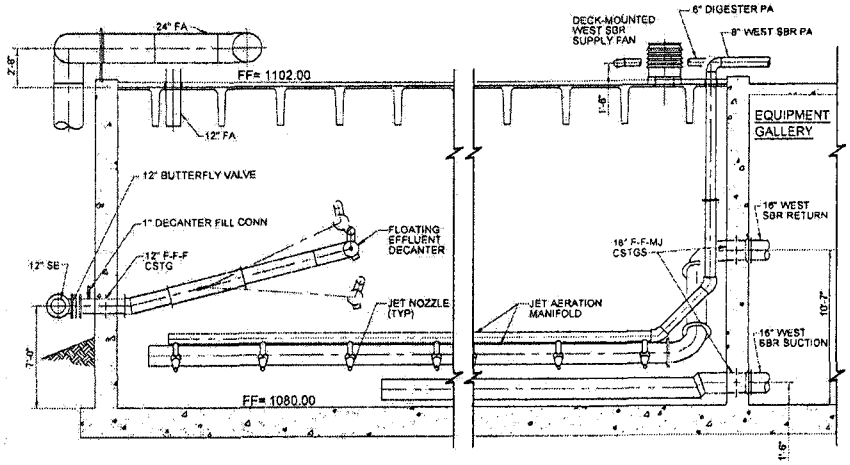

SECTION 1/M14
SCALE: 1/8" = 1'-0"

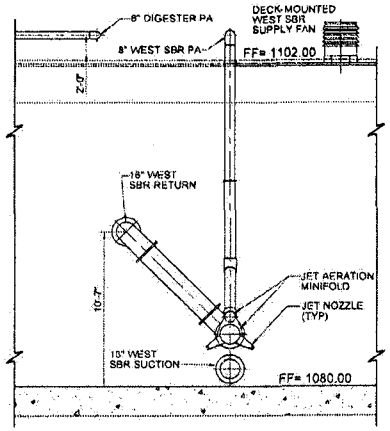

SECTION 2/M14
SCALE: 1/8" = 1'-0"

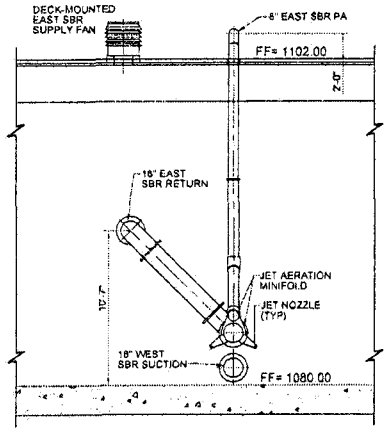

SECTION 3/M14
SCALE: 1/8" = 1'-0"

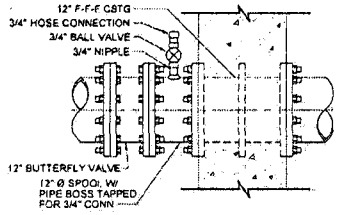

ELEVATION - LOOKING WEST

DETAIL 1/M14 - DECANTER FILL CONNECTION
SCALE: 1/2" = 1'-0"

Registered Professional Engineer (Civil)
CERTIFICATE NO. 33441
BRIAN P. McBRIDE
Date Signed 6-2-08
ARIZONA, U.S.A.
Expires 03/31/11

NO.	DATE	BY	REVISION DESCRIPTION

GLOBAL WATER
RELIABLE · RENEWABLE · REUSABLE
21410 N. 19th Ave. · Ste. 201 · Phoenix, AZ 85027
Ph: 623.580.9600 · Fx: 623.580.9660
www.gwresources.com

HASSAYAMPA NORTHEAST CAMPUS 1 WATER RECLAMATION FACILITY

McBride Engineering Solutions, Inc.
6100 West Gila Springs Pl., Suite 7
Chandler, AZ. 85226
Phone: (480) 759-9608

SEQUENCING BATCH REACTORS SECTIONAL PLAN AND SECTIONS

DESIGNED: MJA/DMK
DRAWN: MG/KPB CHECKED: BPM
DATE: 05-30-08
DWG. NO.: M15
SHEET 33 OF 61

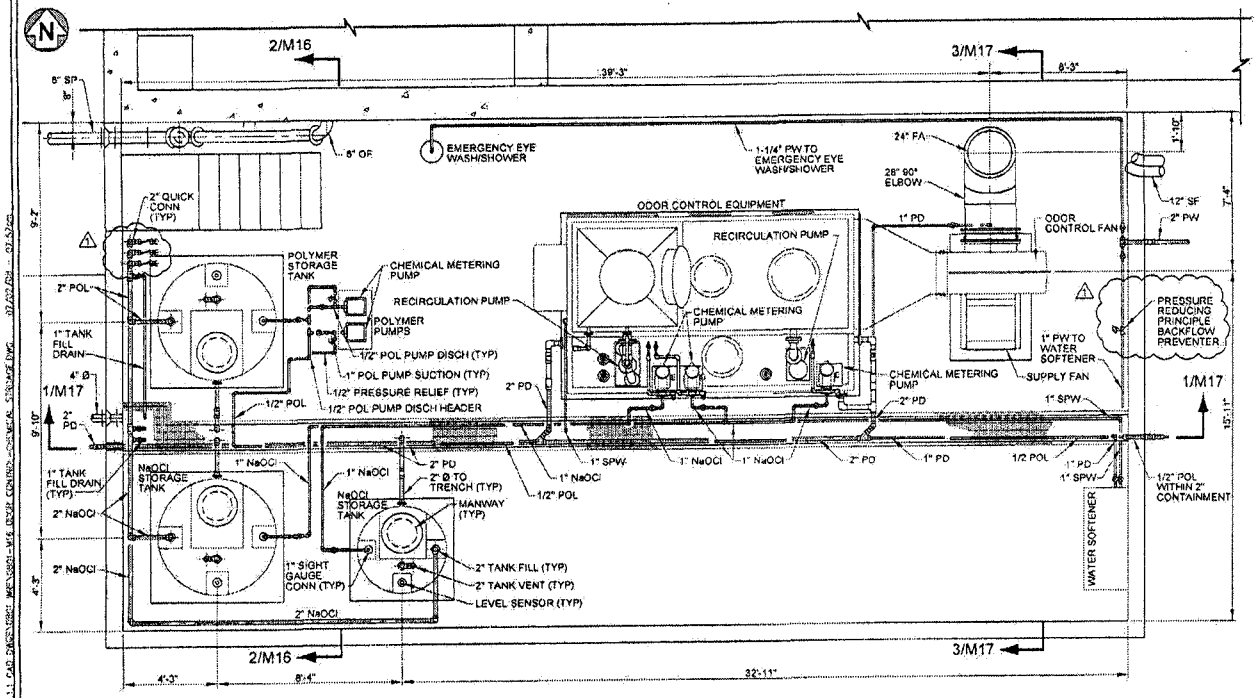

PLAN VIEW
SCALE: 3/16" = 1'-0"

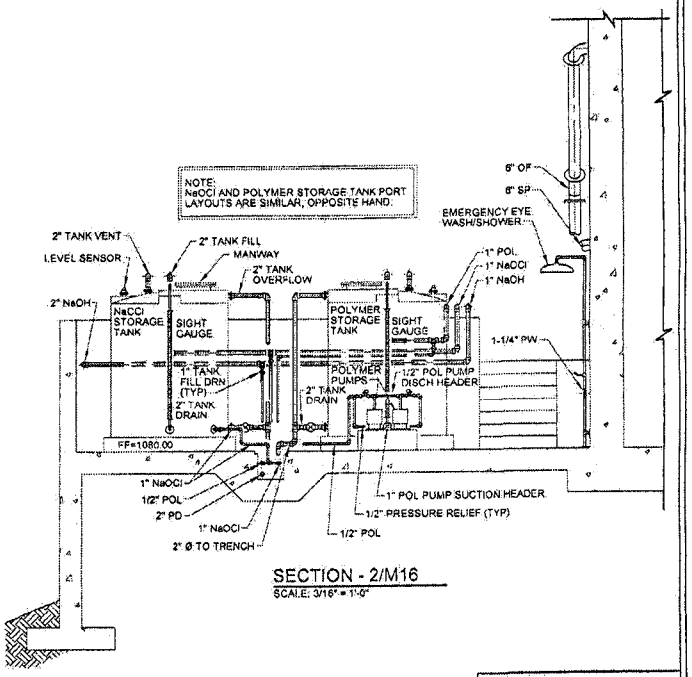

SECTION - 2/M16
SCALE: 3/16" = 1'-0"

Registered Professional Engineer (Civil)
CERTIFICATE NO. 33441
BRIAN P. McBRIDE
Date Signed
ARIZONA, U.S.A.
Expires 03/31/11

NO.	DATE	BY	REVISION DESCRIPTION
1	6-30-08	MG	PER MCESD REVIEW COMMENTS 6-30-08

GLOBAL WATER
RELIABLE · RENEWABLE · REUSABLE
21410 N. 19th Ave. · Ste. 201 · Phoenix, AZ 85027
Ph: 623.580.9600 · Fx: 623.580.9659
www.gwresources.com

HASSAYAMPA NORTHEAST CAMPUS 1 WATER RECLAMATION FACILITY

McBride Engineering Solutions, Inc.
6100 West Gila Springs Pl., Suite 7
Chandler, AZ. 85226
Phone: (480) 759-9608

CHEMICAL STORAGE AND ODOR CONTROL PLAN AND SECTION

DESIGNED: MJA/DMK
DRAWN: MG/KPB CHECKED: BPM
DATE: 05-30-08
DWG. NO. M16
SHEET 34 OF 61

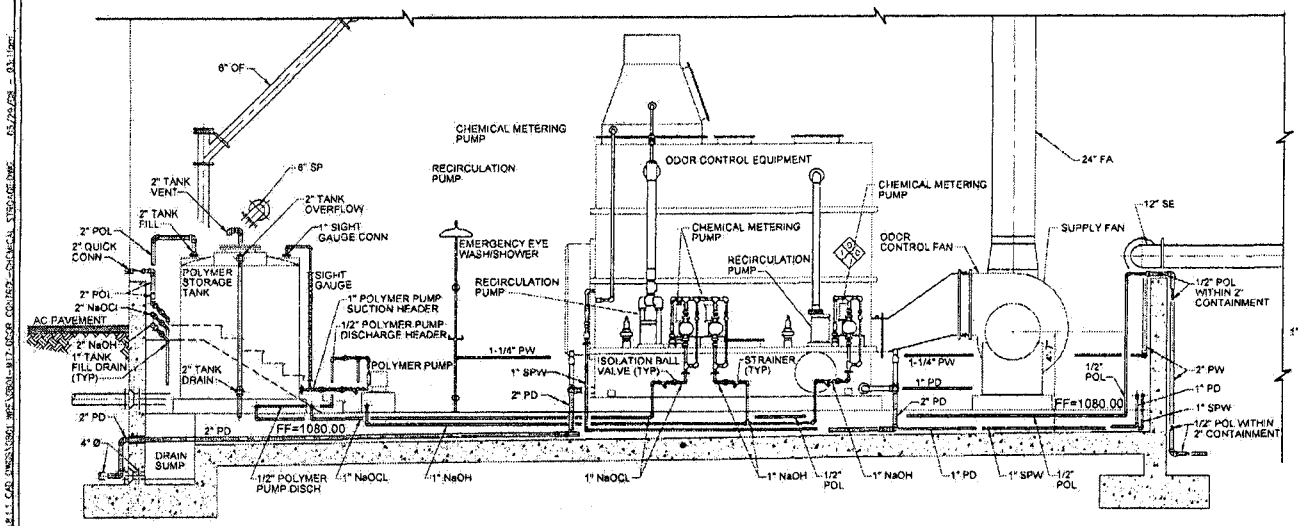

SECTION 1/M16

SCALE: 3/16" = 1'-0"

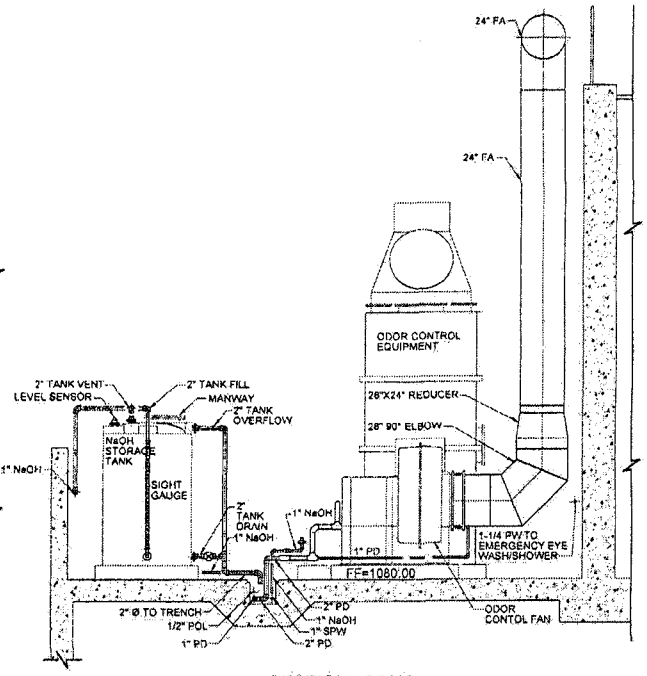

SECTION - 3/M16

SCALE: 3/16" = 1'-0"

Registered Professional Engineer (Civil)
CERTIFICATE NO. 33441
BRIAN P. McBRIDE
Date Signed 6-2-08
ARIZONA U.S.A.
Expires 03/31/11

NO	DATE	BY	REVISION DESCRIPTION

GLOBAL WATER
RELIABLE · RENEWABLE · REUSABLE
21410 N. 19th Ave. · Ste. 201 · Phoenix, AZ 85027
Ph: 623.580.9600 · Fx: 623.580.9668
www.gwresources.com

HASSAYAMPA NORTHEAST CAMPUS 1 WATER RECLAMATION FACILITY

McBride Engineering Solutions, Inc.
6100 West Gila Springs Pl., Suite 7
Chandler, AZ. 85226
Phone: (480) 759-9608

CHEMICAL STORAGE AND ODOR CONTROL PLAN AND SECTION

DESIGNED: MJA/OMK
DRAWN: MG/KPB | CHECKED: BPM
DATE: 05-30-08
DWG. NO. M17
SHEET 35 OF 61

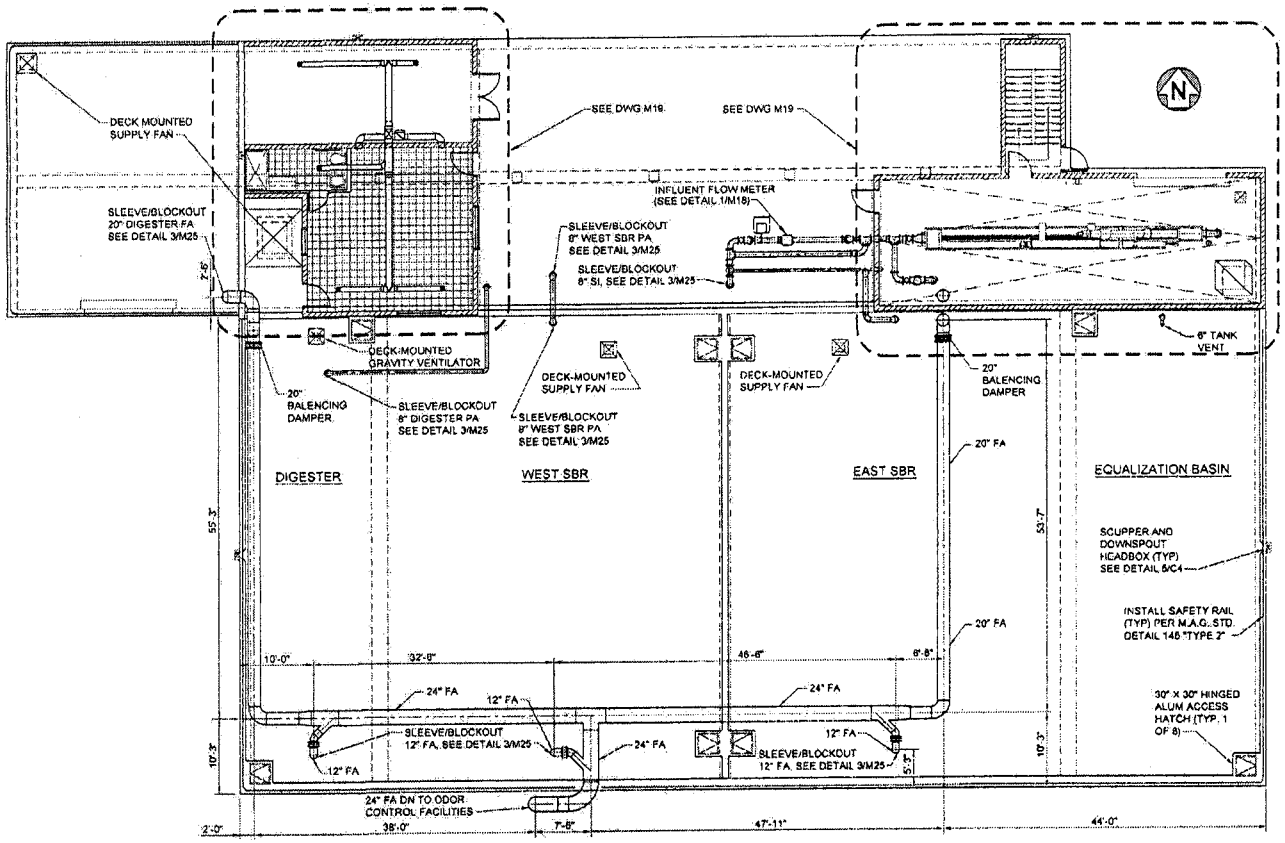

SECTIONAL PLAN
SCALE: 1/16" = 1'-0"

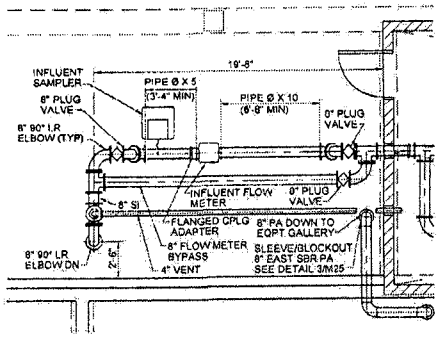

DETAIL 1/M18 - SCREENED INFLUENT FLOW METER
SCALE: 3/16" = 1'-0"

Registered Professional Engineer (Civil)
CERTIFICATE NO. 33441
BRIAN P. McBRIDE
Date Signed 6-2-08
ARIZONA U.S.A.
Expires 03/31/11

NO.	DATE	BY	REVISION DESCRIPTION

GLOBAL WATER
RELIABLE · RENEWABLE · REUSABLE
21410 N. 19th Ave. · Ste. 201 · Phoenix, AZ 85027
Ph: 623.580.9600 · Fx: 623.580.9659
www.gwrsourcea.com

HASSAYAMPA NORTHEAST CAMPUS 1 WATER RECLAMATION FACILITY

McBride Engineering Solutions, Inc.
6100 West Gila Springs Pl., Suite 7
Chandler, AZ. 85226
Phone: (480) 759-9608

MAIN PROCESS STRUCTURE SECTIONAL PLAN

DESIGNED: MJA/DMK
DRAWN: MG/KPB CHECKED: BPM
DATE: 05-30-08
DWG. NO. M18
SHEET 36 OF 61

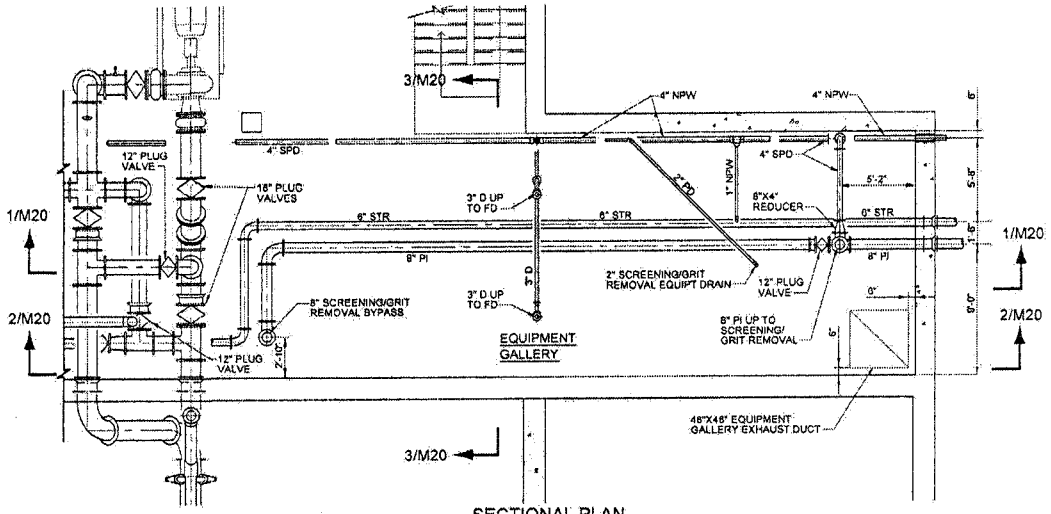

SECTIONAL PLAN
SCALE: 1/8" = 1'-0"

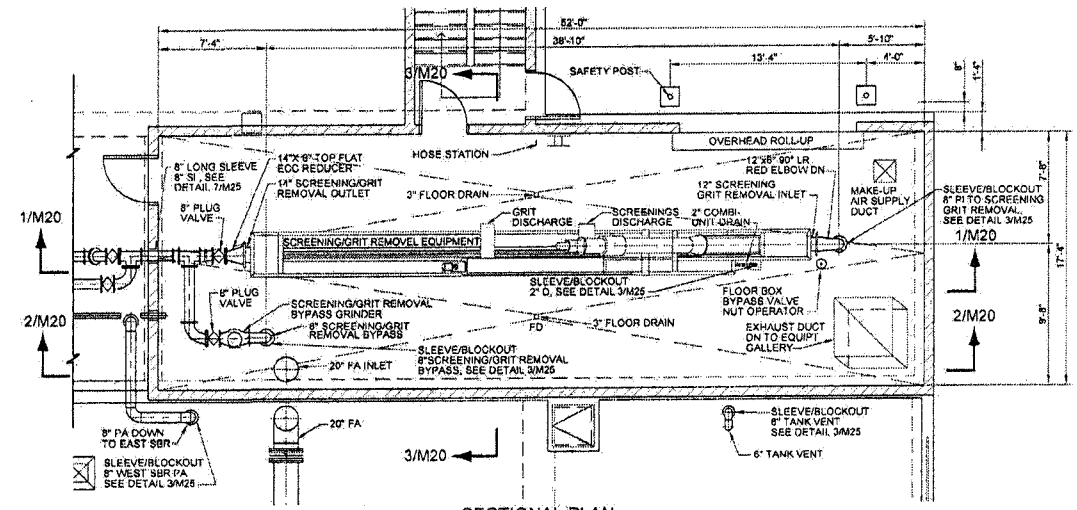

SECTIONAL PLAN
SCALE: 1/8" = 1'-0"

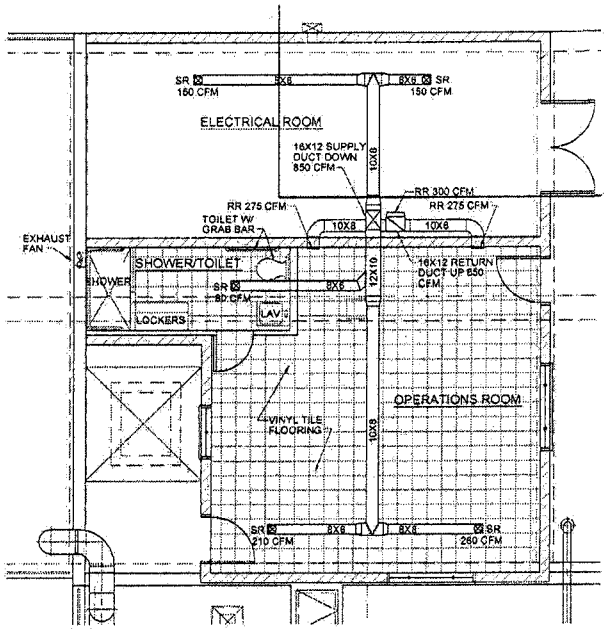

OPERATIONS BUILDING PLAN
SCALE: 1/8" = 1'-0"

Registered Professional Engineer (Civil)
CERTIFICATE NO. 33441
BRIAN P. McBRIDE
Date Signed 6-2-08
ARIZONA, U.S.A.
Expires 03/31/11

NO	DATE	BY	REVISION DESCRIPTION

GLOBAL WATER
RELIABLE • RENEWABLE • REUSABLE
21410 N. 19th Ave. • Ste. 201 • Phoenix, AZ 85027
Ph: 623.580.9600 • Fx: 623.580.9669
www.gwresources.com

HASSAYAMPA NORTHEAST CAMPUS 1 WATER RECLAMATION FACILITY

McBride Engineering Solutions, Inc.
6100 West Gila Springs Pl., Suite 7
Chandler, AZ. 85226
Phone: (480) 759-9608

EAST EQUIPMENT GALLERY PLAN
HEADWORKS PLAN
OPERATIONS BULIDING PLAN

DESIGNED: MJA/DMK
DRAWN: MG/KPS CHECKED: BPM
DATE: 05-30-08
DWG. NO. M19
SHEET 37 OF 61

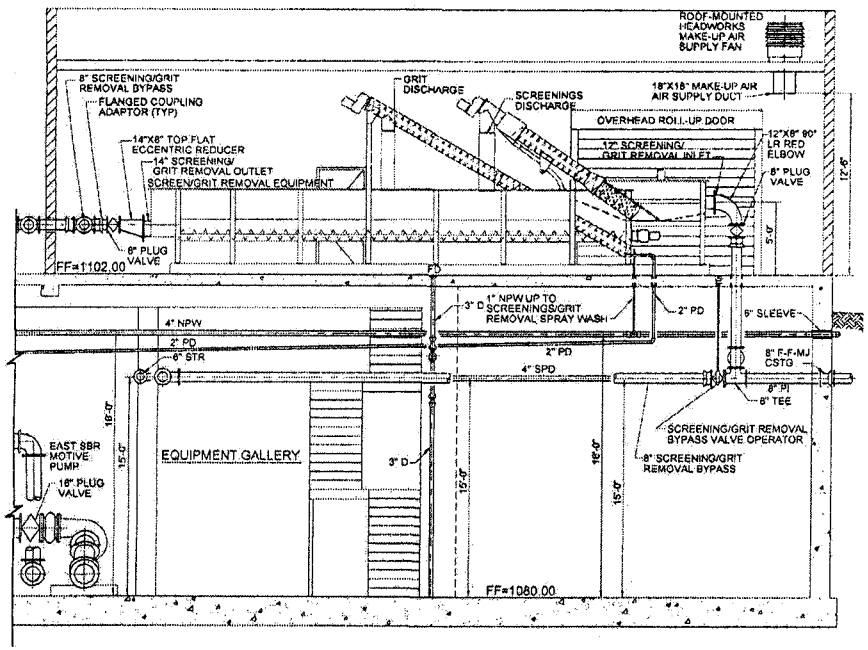

SECTION 1/M19
SCALE: 1/8" = 1'-0"

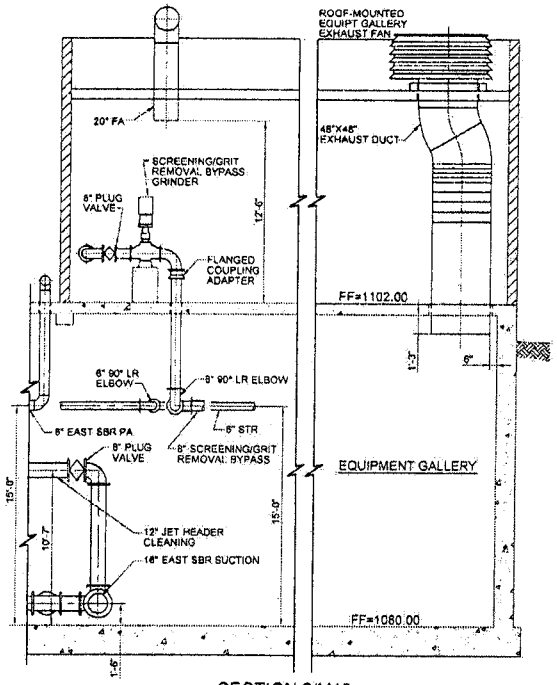

SECTION 2/M19
SCALE: 1/8" = 1'-0"

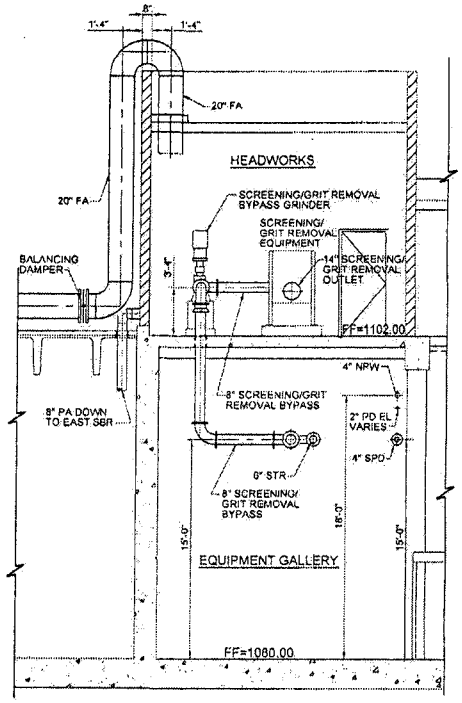

SECTION 3/M19
SCALE: 1/8" = 1'-0"

Registered Professional Engineer (Civil)
CERTIFICATE NO. 33441
BRIAN P. McBRIDE
Date Signed 6-2-08
ARIZONA U.S.A.
Expires 03/31/11

NO.	DATE	BY	REVISION DESCRIPTION

GLOBAL WATER
RELIABLE · RENEWABLE · REUSABLE
21410 N. 19th Ave. · Ste. 201 · Phoenix, AZ 85027
Ph: 623.580.9600 · Fx: 623.580.9659
www.gwresources.com

HASSAYAMPA NORTHEAST CAMPUS 1 WATER RECLAMATION FACILITY

McBride Engineering Solutions, Inc.
6100 West Gila Springs Pl., Suite 7
Chandler, AZ. 85226
Phone: (480) 759-9608

EAST EQUIPMENT GALLERY SECTIONS HEADWORKS SECTIONS

DESIGNED: MJA/DMK
DRAWN: MG/KPB CHECKED: GPM
DATE: 05-30-08
DWG. NO. M20
SHEET 38 OF 61

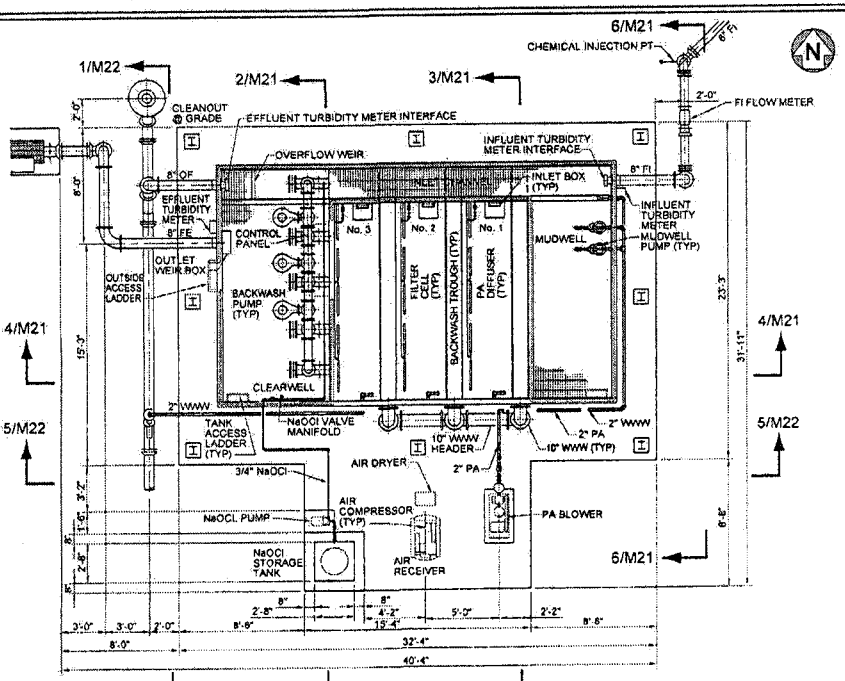

SECTIONAL PLAN
SCALE: 1/8" = 1'-0"

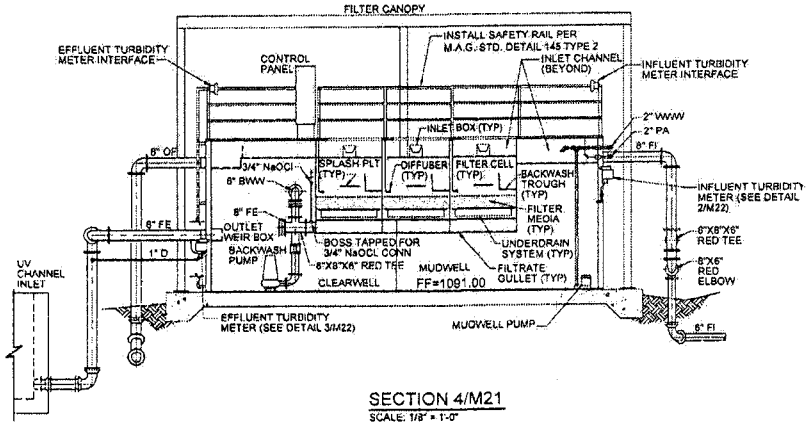

SECTION 4/M21
SCALE: 1/8" = 1'-0"

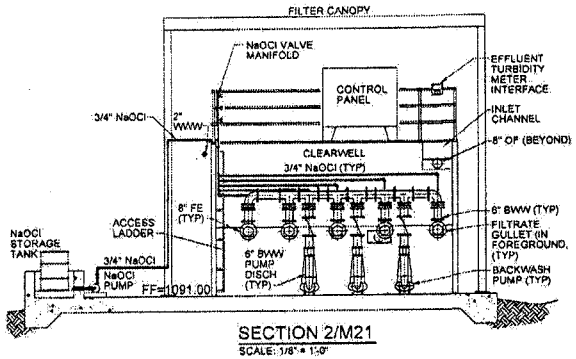

SECTION 2/M21
SCALE: 1/8" = 1'-0"

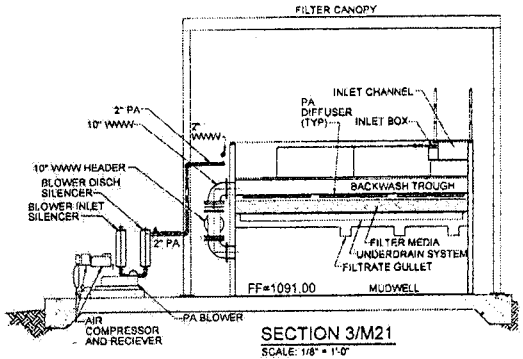

SECTION 3/M21
SCALE: 1/8" = 1'-0"

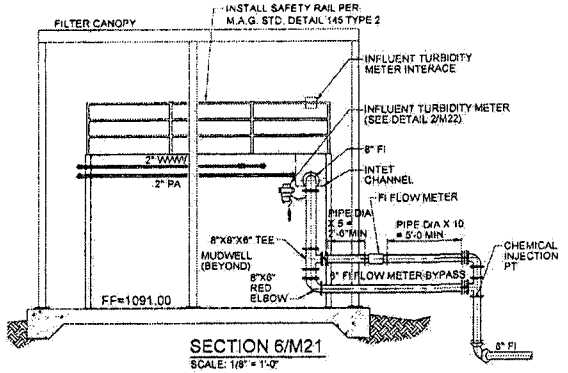

SECTION 6/M21
SCALE: 1/8" = 1'-0"

Registered Professional Engineer (Civil)
CERTIFICATE NO. 33441
BRIAN P. McBRIDE
Date Signed 6-2-08
ARIZONA U.S.A.
Expires 03/31/11

NO.	DATE	BY	REVISION DESCRIPTION

GLOBAL WATER
RELIABLE · RENEWABLE · REUSABLE
21410 N. 19th Ave. · Ste. 201 · Phoenix, AZ 85027
Ph: 623.580.9600 · Fx: 623.580.9656
www.gwresources.com

HASSAYAMPA NORTHEAST CAMPUS 1 WATER RECLAMATION FACILITY

McBride Engineering Solutions, Inc.
6100 West Gila Springs Pl., Suite 7
Chandler, AZ. 85226
Phone: (480) 759-9608

FILTER PLAN, SECTIONS AND DETAILS

DESIGNED: MJA/OMK
DRAWN: MG/KPB CHECKED: BPM
DATE: 05-30-08
DWG. NO. M21
SHEET 39 OF 61

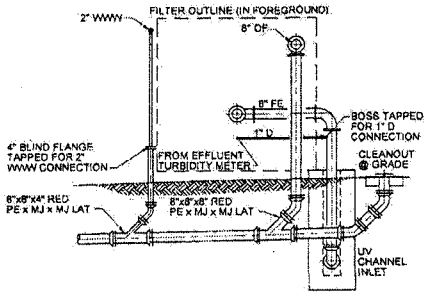

SECTION 1/M21
SCALE: 1/8" = 1'-0"

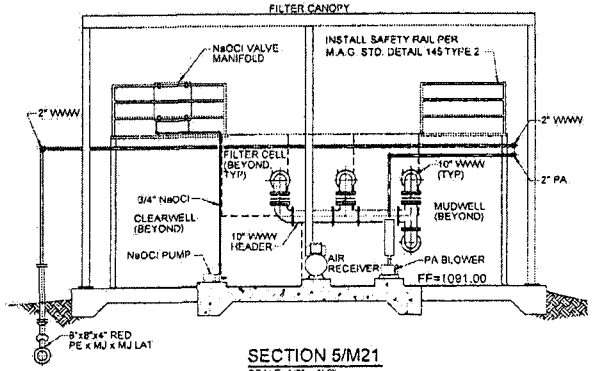

SECTION 5/M21
SCALE: 1/8" = 1'-0"

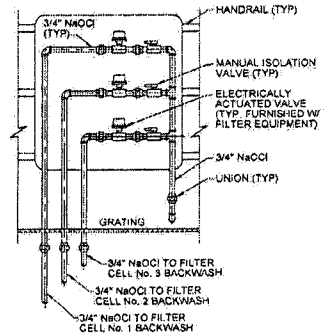

ELEVATION - LOOKING SOUTH

DETAIL 1/M21 - NaOCl VALVE MANIFOLD
NOT TO SCALE

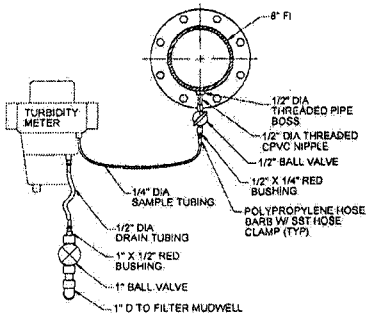

ELEVATION - LOOKING WEST

DETAIL 2/M21 - INFLUENT TURBIDITY METER
NOT TO SCALE

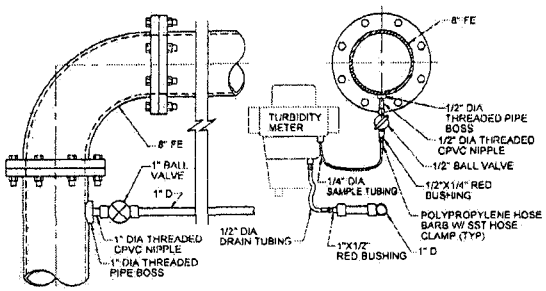

ELEVATION - LOOKING EAST

DETAIL 3/M21 - EFFLUENT TURBIDITY METER
NOT TO SCALE

Registered Professional Engineer (Civil)
CERTIFICATE NO. 33441
BRIAN P. McBRIDE
Date Signed 6-2-08
ARIZONA, U.S.A.
Expires 03/31/11

NO.	DATE	BY	REVISION DESCRIPTION

GLOBAL WATER
RELIABLE · RENEWABLE · REUNABLE
21410 N. 19th Ave. · Ste. 201 · Phoenix, AZ 85027
Ph: 623.580.9600 · Fx: 623.580.0659
www.gwresources.com

HASSAYAMPA NORTHEAST CAMPUS 1 WATER RECLAMATION FACILITY

McBride Engineering Solutions, Inc.
6100 West Gila Springs Pl., Suite 7
Chandler, AZ. 85226
Phone: (480) 759-9608

FILTER PLAN, SECTIONS AND DETAILS

DESIGNED: MJA/DMK
DRAWN: MG/KPB CHECKED: BPM
DATE: 05-30-08
DWG. NO. M22
SHEET 40 OF 81

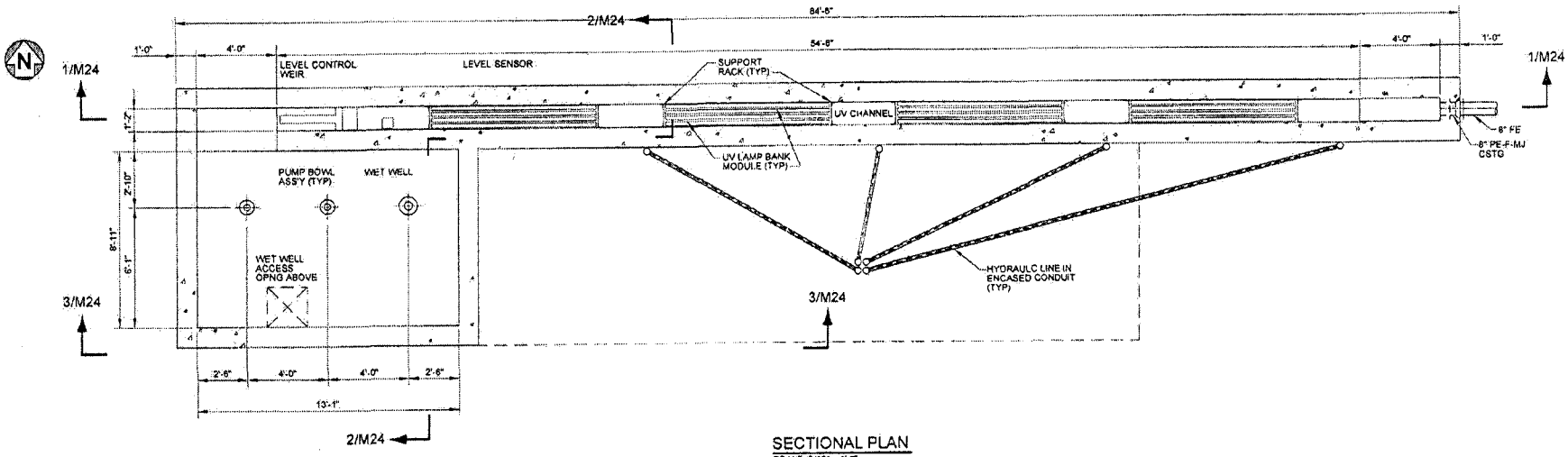

SECTIONAL PLAN
SCALE: 3/16" = 1'-0"

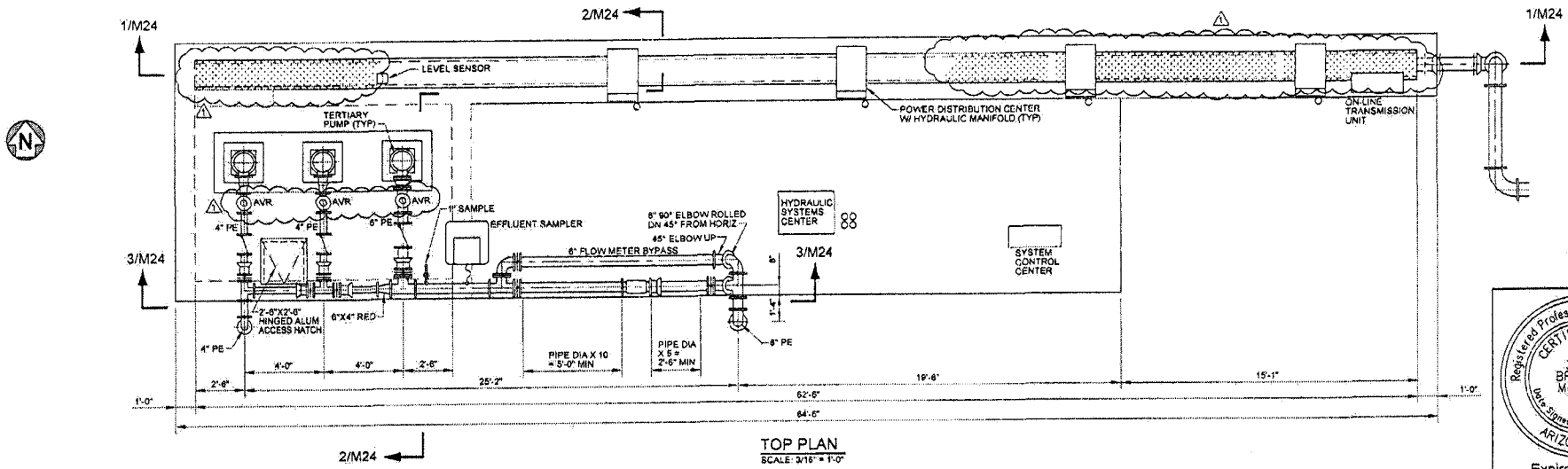

TOP PLAN
SCALE: 3/16" = 1'-0"

Registered Professional Engineer (Civil) CERTIFICATE NO. 33441 BRIAN P. McBRIDE Date Signed ARIZONA, U.S.A.

Expires 03/31/11

NO.	DATE	BY	REVISION DESCRIPTION
1	6-30-08	MG	PER MCESD REVIEW COMMENTS 6-30-08

GLOBAL WATER
RELIABLE · RENEWABLE · REUSABLE
21410 N. 19th Ave. · Ste. 201 · Phoenix, AZ 85027
Ph: 623.580.9600 · Fx: 623.580.9689
www.gwresources.com

HASSAYAMPA NORTHEAST CAMPUS 1 WATER RECLAMATION FACILITY

McBride Engineering Solutions, Inc.
6100 West Gila Springs Pl., Suite 7
Chandler, AZ. 85226
Phone: (480) 759-9608

ULTRAVIOLET DISINFECTION AND TERTIARY PUMP STATION PLANS AND DETAILS

DESIGNED: MJA/DMK
DRAWN: MG/KPB CHECKED: BPM
DATE: 05-30-08
DWG. NO.: M23
SHEET 41 OF 81

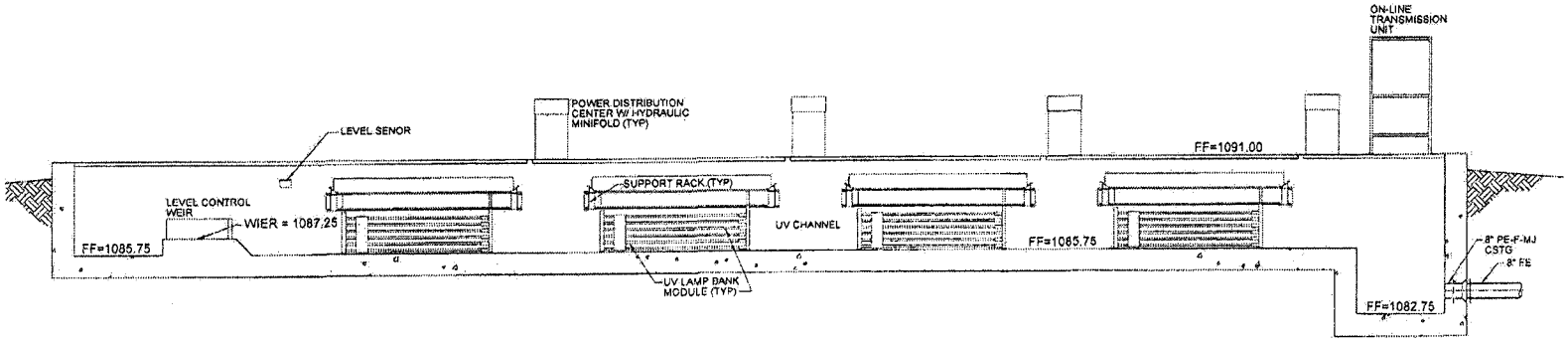

SECTION 1/M23
SCALE: 3/16" = 1'-0"

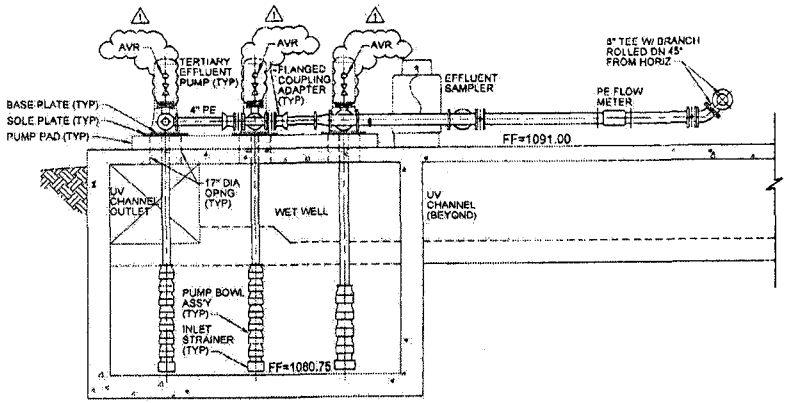

SECTION 3/M23
SCALE: 3/16" = 1'-0"

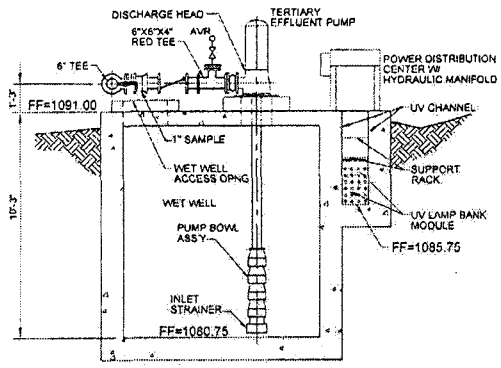

SECTION 2/M23
SCALE: 3/16" = 1'-0"

Registered Professional Engineer (Civil)
CERTIFICATE NO. 33441
BRIAN P. McBRIDE
Date Signed
ARIZONA, U.S.A.
Expires 03/31/11

NO.	DATE	BY	REVISION DESCRIPTION
1	6-30-08	MG	PER MCESD REVIEW COMMENTS 6-30-08

GLOBAL WATER
RELIABLE • RENEWABLE • REUSABLE
21410 N. 19th Ave. • Ste. 201 • Phoenix, AZ 85027
Ph: 623.580.9600 • Fx: 623.580.9609
www.gwresources.com

HASSAYAMPA NORTHEAST CAMPUS 1 WATER RECLAMATION FACILITY

McBride Engineering Solutions, Inc.
6100 West Gila Springs Pl., Suite 7
Chandler, AZ. 85226
Phone: (480) 759-9608

ULTRAVIOLET DISINFECTION AND TERTIARY PUMP STATION PLANS AND DETAILS

DESIGNED: MJA/DMK
DRAWN: MG/KPB CHECKED: BPM
DATE: 05-30-08
DWG. NO. M24
SHEET 42 OF 81

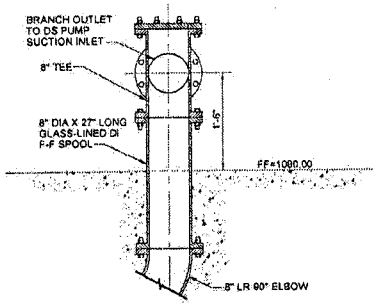

DETAIL 1/M25
SCALE: 1/2" = 1'-0"

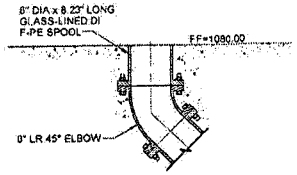

DETAIL 2/M25
SCALE: 1/2" = 1'-0"

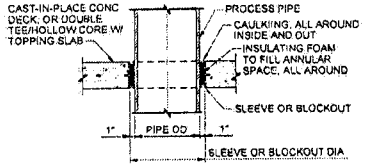

DETAIL 3/M25
SCALE: 1/2" = 1'-0"

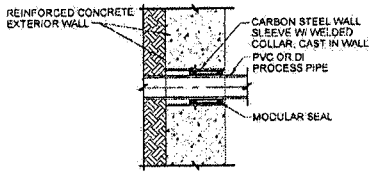

DETAIL 4/M25
SCALE: 1/2" = 1'-0"

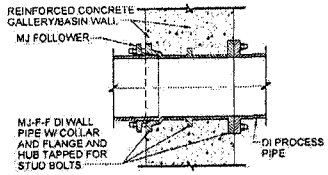

DETAIL 5/M25
SCALE: 1/2" = 1'-0"

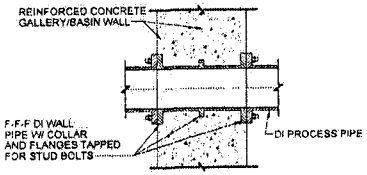

DETAIL 6/M25
SCALE: 1/2" = 1'-0"

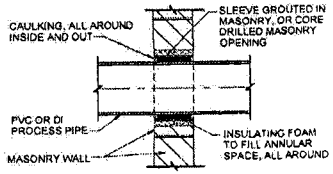

DETAIL 7/M25
SCALE: 1/2" = 1'-0"

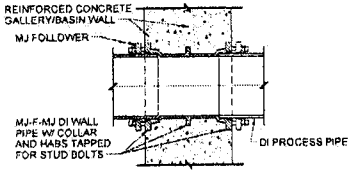

DETAIL 8/M25
SCALE: 1/2" = 1'-0"

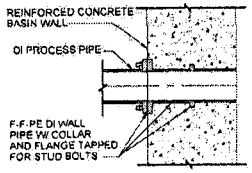

DETAIL 9/M25
SCALE: 1/2" = 1'-0"

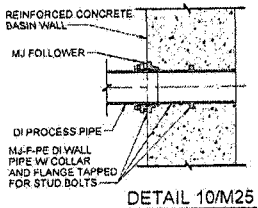

DETAIL 10/M25
SCALE: 1/2" = 1'-0"

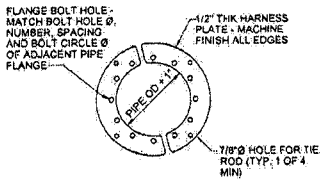

DETAIL 11/M25
TYPICAL HARNESS PLATE
NOT TO SCALE

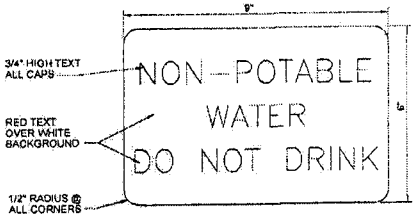

DETAIL 12/M25 - NPW WARNING SIGN
NOT TO SCALE. NOTE: POST THIS SIGN AT EVERY NPW TAP, HOSE BIBB OR HYDRANT

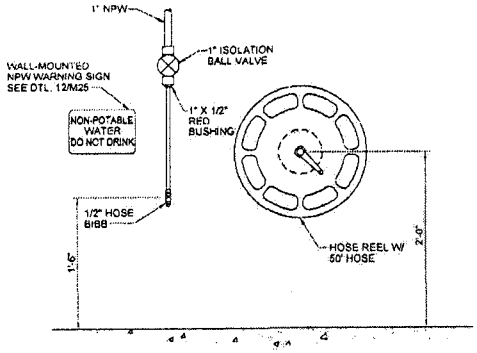

DETAIL 13/M25 - TYPICAL NPW HOSE STATION
SCALE: 3/4" = 1'-0"

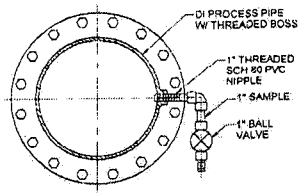

DETAIL 14/M25 - SAMPLE TAP AT 16" SBR RETURN AND AT 6" TE
SCALE: 3/4" = 1'-0"

Registered Professional Engineer (Civil)
CERTIFICATE NO. 33441
BRIAN P. McBRIDE
Date Signed 6-2-08
ARIZONA, U.S.A.
Expires 03/31/11

NO.	DATE	BY	REVISION DESCRIPTION

GLOBAL WATER
RELIABLE · RENEWABLE · REUSABLE
21410 N. 19th Ave., Ste. 201 · Phoenix, AZ 85027
Ph: 623.580.9600 · Fx: 623.580.9659
www.gwresources.com

HASSAYAMPA NORTHEAST CAMPUS 1 WATER RECLAMATION FACILITY

McBride Engineering Solutions, Inc.
6100 West Gila Springs Pl., Suite 7
Chandler, AZ. 85226
Phone: (480) 759-9608

DETAILS

DESIGNED: MJA/DMK
DRAWN: MG/KPB | CHECKED: BPM
DATE: 05-30-08
DWG. NO. M25
SHEET 43 OF 01

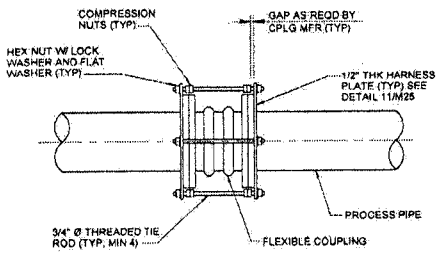

DETAIL 1/M26 - TYPICAL TIED FLEXIBLE COUPLING
NOT TO SCALE

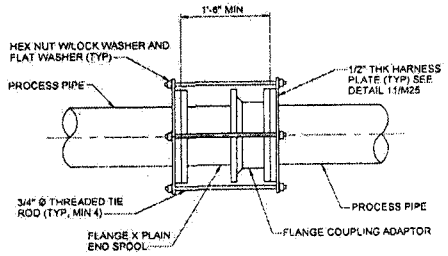

DETAIL 2/M26 - TYPICAL HARNESSED FLANGE COUPLING ADAPTOR - DUCTILE IRON PIPE
NOT TO SCALE

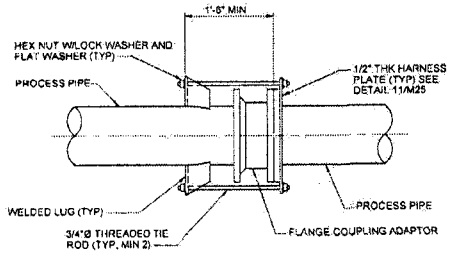

DETAIL 3/M26 - TYPICAL HARNESSED FLANGE COUPLING ADAPTOR - STEEL PIPE
NOT TO SCALE

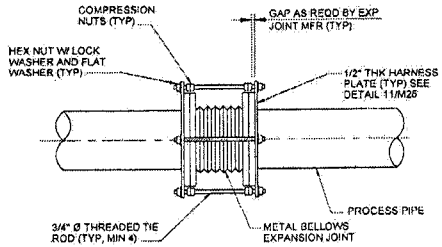

DETAIL 4/M26 - TYPICAL TIED EXPANSION JOINT
NOT TO SCALE

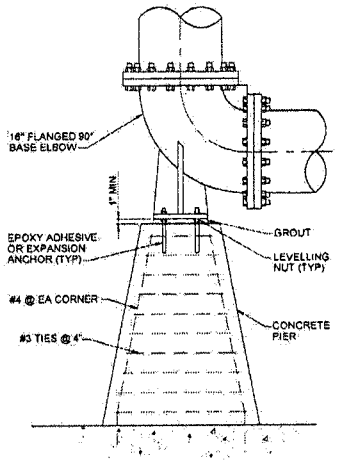

DETAIL 5/M26 - SBR RETURN BASE ELBOW
SCALE: 1/2" = 1'-0"

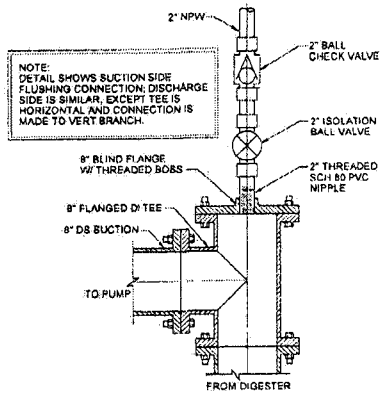

DETAIL 6/M26 - FLUSHING CONNECTION
SCALE: 3/4" = 1'-0"

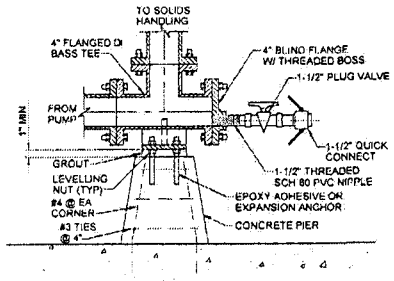

DETAIL 7/M26 - DS DISCHARGE BASE TEE AND DRAIN
SCALE: 3/4" = 1'-0"

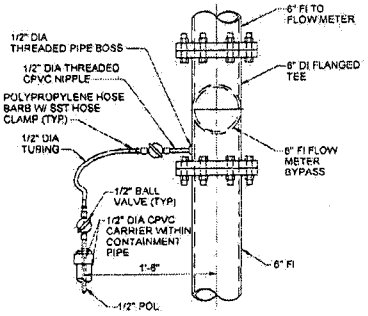

DETAIL 8/M26 - CHEMICAL INJECTION AT FILTER INFLUENT
SCALE: 3/4" = 1'-0"

Registered Professional Engineer (Civil)
CERTIFICATE NO. 33441
BRIAN P. McBRIDE
Date Signed 6-2-08
ARIZONA U.S.A.
Expires 03/31/11

NO	DATE	BY	REVISION DESCRIPTION

GLOBAL WATER
RELIABLE · RENEWABLE · REUSABLE
21410 N. 19th Ave. · Ste. 201 · Phoenix, AZ 85027
Ph: 623.580.9000 · Fx: 623.580.0655
www.gwresources.com

HASSAYAMPA NORTHEAST CAMPUS 1 WATER RECLAMATION FACILITY

McBride Engineering Solutions, Inc.
6100 West Gila Springs Pl., Suite 7
Chandler, AZ. 85226
Phone: (480) 759-9608

DETAILS

DESIGNED: MJA/DMK	
DRAWN: MGK/PB	CHECKED: BPM
DATE: 05-30-08	
DWG. NO.	M26
SHEET 44 OF 81	

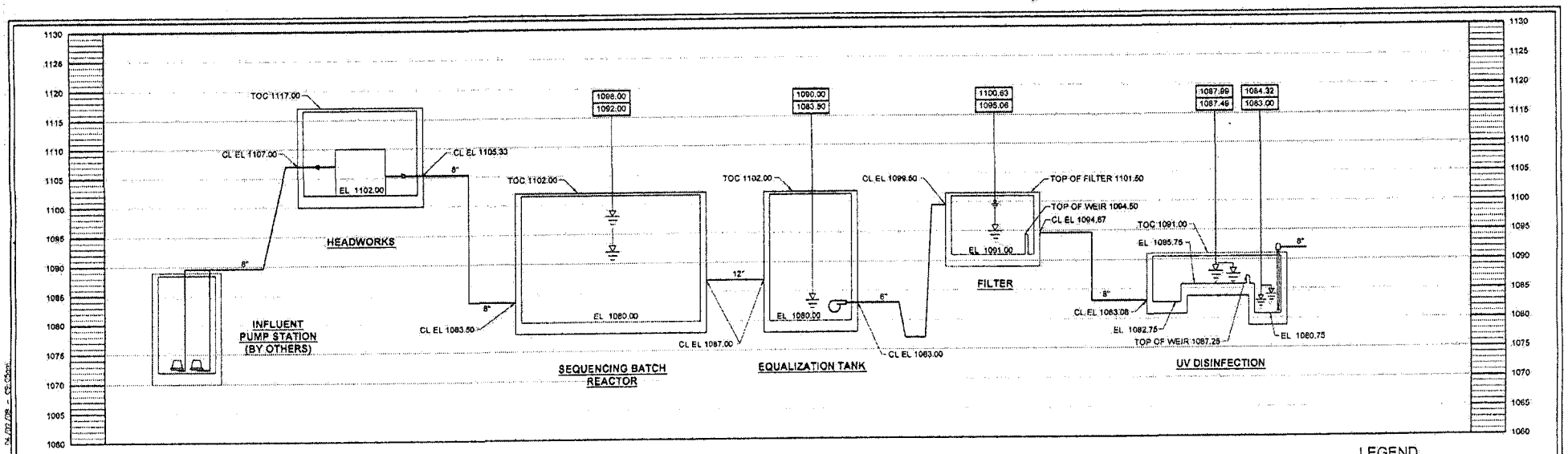

HYDRAULIC PROFILE

HORIZONTAL SCALE: NONE
VERTICAL SCALE: 1/16" = 1'-0"

LEGEND

FL = FLOOR
TOC = TOP OF CONCRETE
TOG = TOP OF GRATE
TOW = TOP OF WALL

XXX.XX HIGH WATER ELEVATION
XXX.XX LOW WATER ELEVATION
HIGH WATER ELEVATION
LOW WATER ELEVATION

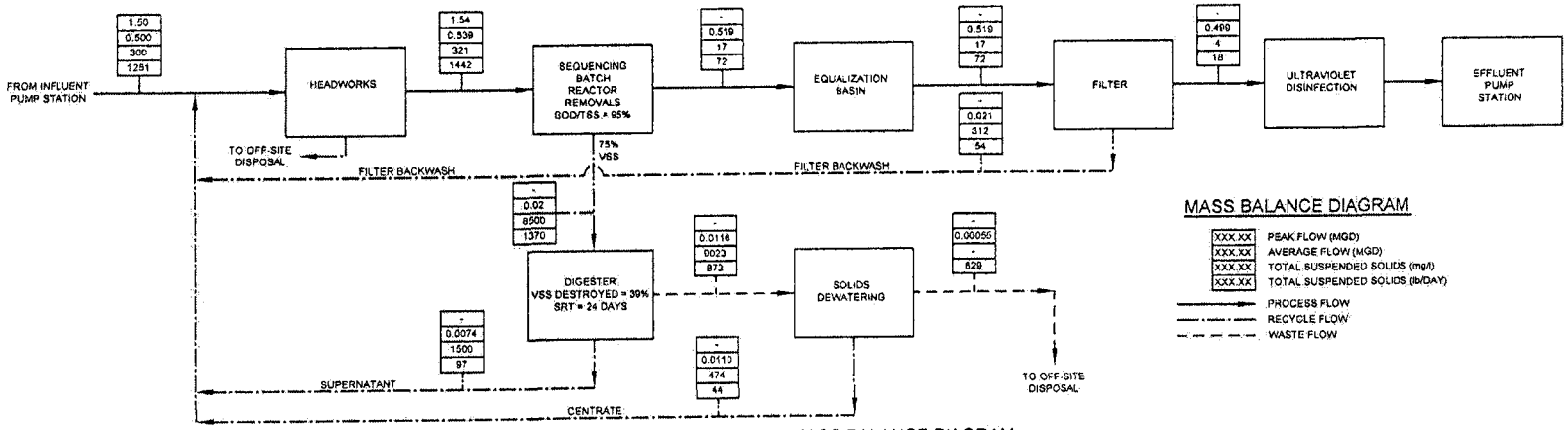

MASS BALANCE DIAGRAM

NOT TO SCALE

MASS BALANCE DIAGRAM

XXX.XX PEAK FLOW (MGD)
XXX.XX AVERAGE FLOW (MGD)
XXX.XX TOTAL SUSPENDED SOLIDS (mg/l)
XXX.XX TOTAL SUSPENDED SOLIDS (lb/DAY)

PROCESS FLOW
RECYCLE FLOW
WASTE FLOW

Registered Professional Engineer (Civil)
CERTIFICATE NO. 33441
BRIAN P. McBRIDE
Date Signed 6-2-08
ARIZONA, U.S.A.
Expires 03/31/11

NO	DATE	BY	REVISION DESCRIPTION

GLOBAL WATER
RELIABLE · RENEWABLE · REUSABLE
21410 N. 19th Ave. · Ste. 201 · Phoenix, AZ 85027
Ph: 623.580.9600 · Fx: 623.580.0659
www.gwresources.com

HASSAYAMPA NORTHEAST CAMPUS 1 WATER RECLAMATION FACILITY

McBride Engineering Solutions, Inc.
6100 West Gila Springs Pl., Suite 7
Chandler, AZ. 85226
Phone: (480) 759-9608

HYDRAULIC PROFILE
MASS BALANCE DIAGRAM

DESIGNED: MJA/DMK
DRAWN: MO/KPB CHECKED: BPM
DATE: 05-30-08
DWG. NO. M27
SHEET 45 OF 61

ISA INSTRUMENT INDENTIFICATION TABLE

	FIRST LETTERS		SUCCEEDING LETTERS		
	MEASURED OR INITIATING VARIABLE	MODIFIER	READOUT OR PASSIVE FUNCTION	OUTPUT FUNCTION	MODIFIER
A	ANALYZER		ALARM		AUTO
B	BURNER, COMBUSTION				
C	CONDUCTIVITY			CONTROL	CLOSED
D	DENSITY	DIFFERENTIAL			
E	VOLTAGE		ELEMENT		
F	FLOW	RATIO			
G	GAUGE		GLASS, VIEWING DEVICE		
H	HAND				HIGH
I	CURRENT		INDICATE		
J	POWER	SCAN			
K	TIME, TIME SCHED.	TIME RATE OF CHANGE		CONTROL STATION	
L	LEVEL		LIGHT		LOW
M	MOTION				MIDDLE
N	INTRUSION				NORMAL
O	TORQUE		ORIFICE, RESTRICTION		OPEN
P	PRESSURE		POINT, CONNECTION		STOP
Q	QUANTITY	INTEGRATE, TOTALIZE			
R	RADIATION		RECORD, OR PRINT		RUN, OR REMOTE
S	SPEED, FREQUENCY	SAFETY		SWITCH	START
T	TEMPERATURE			TRANSMIT	
U	MULTIVARIABLE		MULTIFUNCTION	MULTIFUNCTION	MULTIFUNCTION
V	VIBRATION			VALVE, LOUVER	
W	WEIGHT		WELL		
X	MOTOR	X-AXIS	UNCLASSIFIED	UNCLASSIFIED	UNCLASSIFIED
Y	EVENT, STATE, OR PRESENCE	Y-AXIS		RELAY, COMPUTE, CONVERT	
Z	POSITION	Z-AXIS		DRIVER, ACTUATOR, FINAL CONTROL ELEMENT	

P&ID ABBREVIATIONS

A	AMPERE	JB	JUNCTION BOX	PRES	PRESSURE
AFD	ADJUSTABLE FREQUENCY DRIVE	L, LO	LOW	PS	PRESSURE SWITCH
AI	ANALOG INPUT	LAN	LOCAL AREA NETWORK	PSI	POUNDS PER SQUARE INCH
AIC	AMPS INTERRUPTING CAPACITY	LC	LOOP CONTROLLER	PV	PROCESS VARIABLE
ARV	AIR RELIEF VALVE	LCP	LOCAL CONTROL PANEL	RAS	RETURN ACTIVATED SLUDGE
AO	ANALOG OUTPUT	LOS	LOCK-OFF-STOP	RAW	RAW WATER
AS	AIR SUPPLY	LR	LOCAL/REMOTE	REM	REMOTE
ATS	AUTOMATIC TRANSFER SWITCH	LS	LEVEL (i.e.FLOAT) SWITCH	RF	RADIO FREQUENCY
AUTO	AUTOMATIC	M	MOTOR	RIO	REMOTE INPUT OUTPUT
CB	CIRCUIT BREAKER	MA	MANUAL/AUTO	RS	RAW SEWAGE
CL2	CHLORINE	mA	MILLIAMP	RSP	RAW SEWAGE PUMP
CON	CONTACTOR	MC	MANUFACTURE CABLE	RST	RESET
CU	COPPER, BARE	MCC	MOTOR CONTROL CENTER	RTD	RESISTANCE TEMPERATURE DEVICE
CV	CONTROL VALVE	MCP	MOTOR CIRUIT PROTECTOR	RTU	REMOTE TELEMERY UNIT
DCS	DISTRIBUTED CONTROL SYSTEM	MFR(S)	MANUFACTURER(S)	RUNf	RUN (FAST SPEED)
DI	DISCRETE INPUT	MGD	MILLION GALLONS PER DAY	RUNs	RUN (SLOW SPEED)
DO	DISSOLVED OXYGEN, DISCRETE OUTPUT	MGL	MILLIGRAMS PER LITER	SB	SLUDGE BLANKET
DP	DIFFERENTIAL PRESSURE	MH	MANHOLE	SEQ	SERVICE ENTRANCE EQUIPMENT
DWG.	DRAWING	MLR	MIXED LIQUOR RETURN	SES	SERVICE ENTRANCE SECTION
EGO	EMERGENCY GAS OFF	MO	MOISTURE	SLC	SINGLE LOOP CONTROLLER
ETM	ELAPSED TIME METER	MOD	MODULATED	SLOS	START-LOCK-OFF-STOP
ETMf	ELAPSED TIME METER (FAST SPEED)	MTU	MASTER TELEMETRY UNIT	SO2	SULFUR DIOXIDE
ETMs	ELAPSED TIME METER (SLOW SPEED)	NPW	NON-POTABLE WATER	SOV	SOLENOID OPERATED VALVE
EOL	ELECTRINIC OVERLOAD	NS	NITROGEN SUPPLY	SP	SET POINT
EXIST	EXISTING	NTU	TURBIDITY	SPD	SPEED
FA	FOUL AIR	O/C	OPEN / CLOSE	SPR	SPARE
FC	FAIL CLOSED	OCA	OPEN-CLOSE-REMOTE	SS	START/STOP (MAINTAINED)
FE	FINAL EFFLUENT	OIT	OPERATOR INTERFACE TERMINAL	SSS	SOLID STATE STARTER (SOFT START)
FR	FORWARD-REVERSE	OL	OVERLOAD	STR	MOTOR STARTER
FS	FLOAT SWITCH	OO	ON / OFF (MAINTAINED)	TAH	TEMPERATURE ALARM HIGH
FVNR	FULL VOLTAGE NON-REVERSING	OOA	ON-OFF-AUTO	T/M	TEMPERATURE AND/OR MOISTURE
FW	FINISHED WATER	OOR	ON-OFF-REMOTE	TEMP.	TEMPERATURE
GND	GROUND	OSC	OPEN-STOP-CLOSE	TS	TEMPERATURE SWITCH
GAL	GALLONS	PAH	PRESSURE ALARM HIGH	TSS	TOTAL SUSPENDED SOLIDS
GPD	GALLONS PER DAY	PER	PERMISSIVE	UG	UNDERGROUND
GPH	GALLONS PER HOUR	PLC	PROGRAMMABLE LOGIC CONTROLLER	USD	UP/STOP/DOWN
GPM	GALLONS PER MINUTE	PNL	PANEL	V	VOLT
H, HI	HIGH	PO	PULSE OUTPUT	VFD	VARIABLE FREQUENCY DRIVE
H2S	HYDROGEN SULFIDE	POS	POSITION	W	WATER
HMI	HUMAN MACHINE INTERFACE	POT	POTENTIOMETER	WAS	WASTE ACTIVATED SLUDGE
HOA	HANDS-OFF-AUTO	PPG	POUNDS PER GALLON	WW	WASTEWATER
I	CURRENT	PPH	POUNDS PER HOUR	XMTR	TRANSMITTER
IO	INPUT/OUTPUT	PPM	PARTS PER MILLION	ZS	POSITION (i.e. LIMIT) SWITCH
IOE	INTERNAL-OFF-EXTERNAL	PR	PAIR		

TAG NUMBERS AND DESIGNATIONS

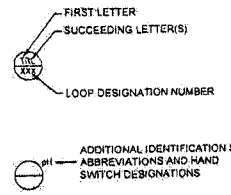

HAND SWITCH DESIGNATIONS

ES	EMERGENCY STOP
HOA	HAND-OFF-AUTO
HOR	HAND-OFF-REMOTE
HORA	HAND-OFF-REMOTE-AUTO
JOA	JOG-OFF-AUTO
LOR	LOCAL-OFF-REMOTE
LR	LOCAL-REMOTE
OC	OPEN-CLOSE
OO	ON-OFF

LINE SYMBOLS

- MAJOR PROCESS PIPING OR FLOW CHANNEL
- EXISTING PROCESS PIPING
- SECONDARY PROCESS PIPING
- EXISTING SECONDARY PROCESS PIPING
- MISCELLANEOUS PIPING
- EXISTING MISCELLANEOUS PIPING
- EXISTING PIPING AND EQUIPMENT OR FUTURE PIPING AND EQUIPMENT
- ELECTRICAL SIGNAL
- HYDRAULIC SIGNAL
- PNEUMATIC SIGNAL
- ELECTRICAL DIRECTION ARROW
- SIGNAL CONNECTION POINT
- FLOW ARROW FOR PROCESS PIPING
- 1-3 /A — PROCESS OR SIGNAL LINE GOING TO ANOTHER SHEET
- 1-2 /A — PROCESS OR SIGNAL LINE FROM ANOTHER SHEET (MATCH LETTERS)
- PROCESS LINES CROSSING (NOT CONNECTED)
- INTERNAL SYSTEM SIGNAL LINK (SOFTWARE OR DATA LINK)

P&ID INTERFACE SYMBOLS

- PILOT LIGHT X= LENS COLOR R=RED, G=GREEN, A=AMBER B=BLUE
- INTERLOCK DEVICE OR RELAY X=NOTE REF.
- FIELD DEVICE
- DUAL CHANNEL CURRENT ISOLATOR
- PANEL DEVICE
- DISCRETE INPUT
- DEVICE MOUNTED IN SUBPANEL
- DISCRETE OUTPUT
- REMOTE I/O TERMINAL
- ANALOG INPUT
- HMI OR OIT FUNCTION
- ANALOG OUTPUT
- PULSE INPUT

NOTE:
REFER TO ISA INSTRUMENT IDENTIFICATION TABLE FOR DEFINITION OF LETTERS BBB INSIDE THE BUBBLES. CCC REPRESENTS LOOP ID (IF USED). SEE ABBREVIATIONS LIST FOR SUPERSCRIPT AAA.

P&ID VALVE SYMBOLS

- GATE VALVE
- BUTTERFLY VALVE
- MOTOR OPERATED PLUG VALVE
- ECCENTRIC PLUG VALVE
- BALL VALVE
- 3 WAY VALVE
- 4 WAY VALVE
- CHECK VALVE
- BALL CHECK VALVE
- MOTOR OPERATED GATE VALVE
- MOTOR OPERATED BUTTERFLY VALVE
- AIR RELEASE VALVE
- SWING CHECK VALVE
- KNIFE VALVE
- STOP CHECK VALVE
- MOTOR OPERATED PLUG VALVE
- SOLENOID VALVE
- PUMP CONTROL VALVE
- PRESSURE REGULATOR VALVE
- BACK PRESSURE VALVE
- PRESSURE RELIEF VALVE
- RELIEF VALVE
- SURGE ANTICIPATOR VALVE
- PLUG VALVE
- MOTOR OPERATED SLEEVE VALVE
- MOTOR OPERATED PINCH VALVE

P&ID EQUIPMENT AND PROCESS SYMBOLS

- METERING PUMP WITH MANUAL STROKE CONTROL
- ROTARY LUBE PUMP
- SUBMERSIBLE MIXER
- ARRATOR
- SUBMERSIBLE PUMP
- DIESEL GENERATOR
- CENTRIFUGAL PUMP
- BLOWER
- MOTOR ACTUATOR
- PNUEMATIC ACTUATOR
- SOLENOID
- VERTICAL TURBINE PUMP
- CHLORINE TANK
- WEIGHT SCALE
- AIR COMPRESSOR
- SLUICE GATE
- SAMPLER
- PROPELLER FLOWMETER ELEMENT
- MAGNETIC FLOWMETER ELEMENT
- FLOWMETER
- INSERTION TYPE MASS FLOW METER
- MASS FLOW METER ANNUBAR TYPE
- DRAIN
- OUTLET SILENCER
- INLET SILENCER
- ROTAMETER
- AIR FILTER
- EJECTOR
- DIAPHRAGM SEAL
- DIFFUSER
- DIAPHRAGM
- Y-TYPE STRAINER
- IPS CORPORATION STOP
- PVC DIFFUSER WITH IPS CORPORATION STOP

SENSING, INDICATION, AND CONTROL SYMBOLS

- ULTRASONIC LEVEL TRANSDUCER
- FLOAT SWITH
- BEACON
- INDICATING LIGHT
- HAND SWITCH
- ORP ANALYZER
- pH ANALYZER
- ANALYZER ELEMENT
- CO SENSOR
- ORP SENSOR
- pH SENSOR
- DO ANALYZER
- RESIDUAL CL2 CHORINE SENSOR
- RESIDAUL CL2 CHLORINE ANALYZER

Registered Professional Engineer (Civil)
CERTIFICATE NO. 33441
BRIAN P. McBRIDE
Date Signed 6-2-08
ARIZONA U.S.A.
Expires 03/31/11

NO.	DATE	BY	REVISION DESCRIPTION

GLOBAL WATER
RELIABLE · RENEWABLE · REUSABLE
21410 N. 19th Ave. · Ste. 201 · Phoenix, AZ 85027
Ph: 623.580.9600 · Fx: 623.580.9669
www.gwresources.com

HASSAYAMPA NORTHEAST CAMPUS 1 WATER RECLAMATION FACILITY

McBride Engineering Solutions, Inc.
6100 West Gila Springs Pl., Suite 7
Chandler, AZ. 85226
Phone: (480) 759-9608

SYMBOLS, LEGEND AND ABBREVIATIONS

DESIGNED: MJA/DMK
DRAWN: MG/KPB | CHECKED: BPM
DATE: 05-30-08
DWG. NO. N1
SHEET 46 OF 01

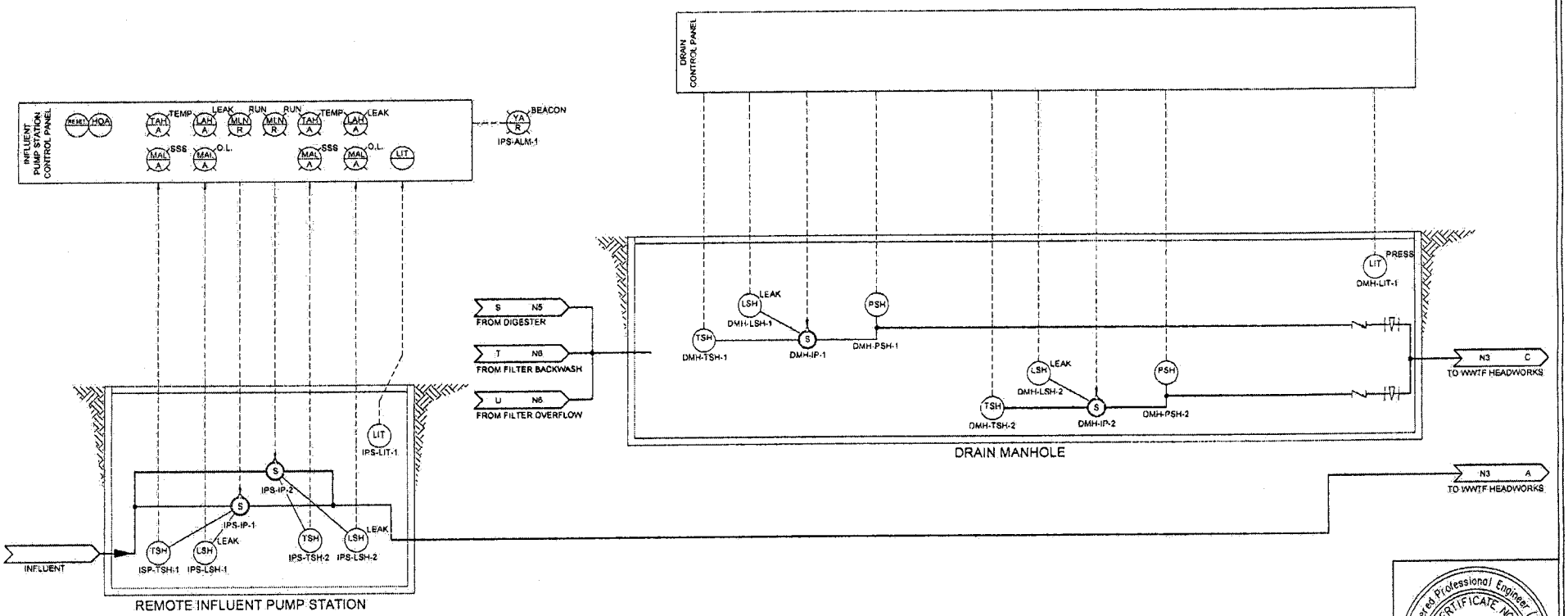

Registered Professional Engineer (Civil)
CERTIFICATE NO. 33441
BRIAN P. McBRIDE
Date Signed 6-2-08
ARIZONA U.S.A.
Expires 03/31/11

NO.	DATE	BY	REVISION DESCRIPTION

GLOBAL WATER
RELIABLE · RENEWABLE · REUSABLE
21410 N. 19th Ave. · Ste. 201 · Phoenix, AZ 85027
Ph: 623.580.9600 · Fx: 623.580.9699
www.gwresources.com

HASSAYAMPA NORTHEAST CAMPUS 1 WATER RECLAMATION FACILITY

McBride Engineering Solutions, Inc.
6100 West Gila Springs Pl., Suite 7
Chandler, AZ. 85226
Phone: (480) 759-9608

OFFSITE IPS, DRAIN MANHOLES P&ID

DESIGNED: MJA/DMK
DRAWN: MG/KPB CHECKED: BPM
DATE: 05-30-08
DWG. NO. N2
SHEET 47 OF 61

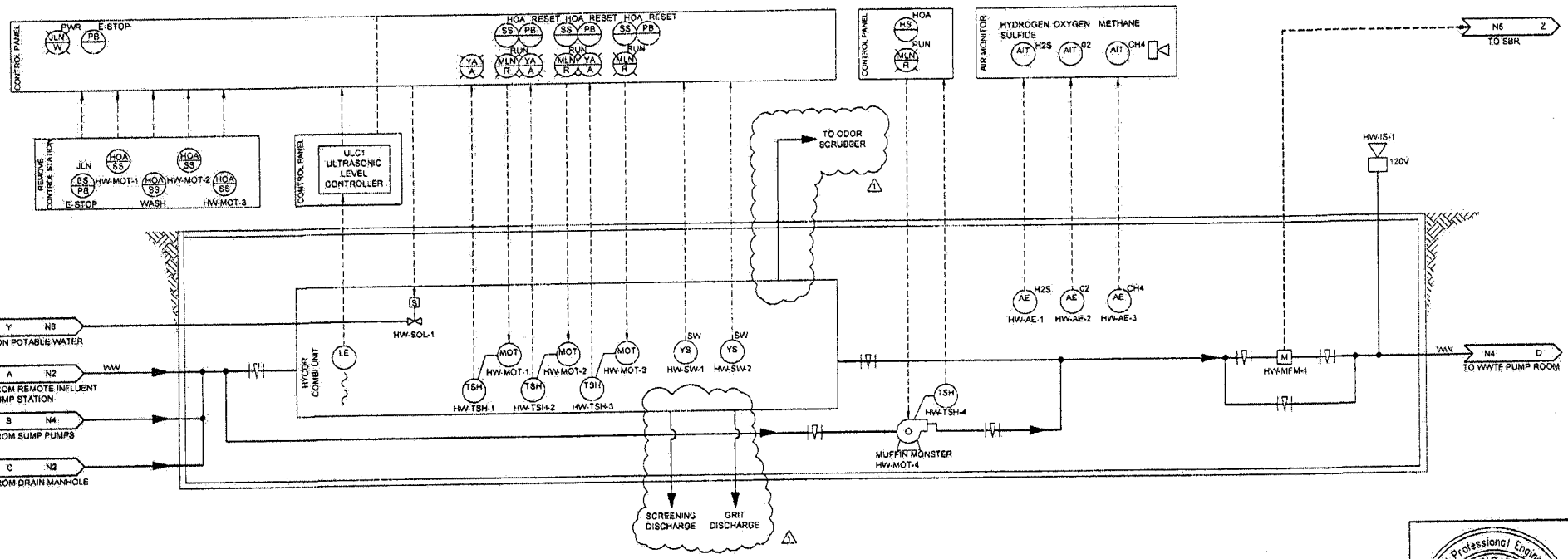

Registered Professional Engineer (Civil)
CERTIFICATE NO. 33441
BRIAN P. McBRIDE
Date Signed
ARIZONA, U.S.A.
Expires 03/31/11

NO	DATE	BY	REVISION DESCRIPTION
1	6-30-08	MG	PER MCESD REVIEW COMMENTS 6-30-08

GLOBAL WATER
RELIABLE · RENEWABLE · REUSABLE
21410 N. 19th Ave. · Ste. 201 · Phoenix, AZ 85027
Ph: 623.580.9600 · Fx: 623.580.9659
www.gwresources.com

HASSAYAMPA NORTHEAST CAMPUS 1 WATER RECLAMATION FACILITY

McBride Engineering Solutions, Inc.
6100 West Gila Springs Pl., Suite 7
Chandler, AZ. 85226
Phone: (480) 759-9608

HEADWORKS P&ID

DESIGNED: MJA/DMK
DRAWN: MG/KPB CHECKED: BPM
DATE: 08-30-08
DWG. NO. N3
SHEET 46 OF 61

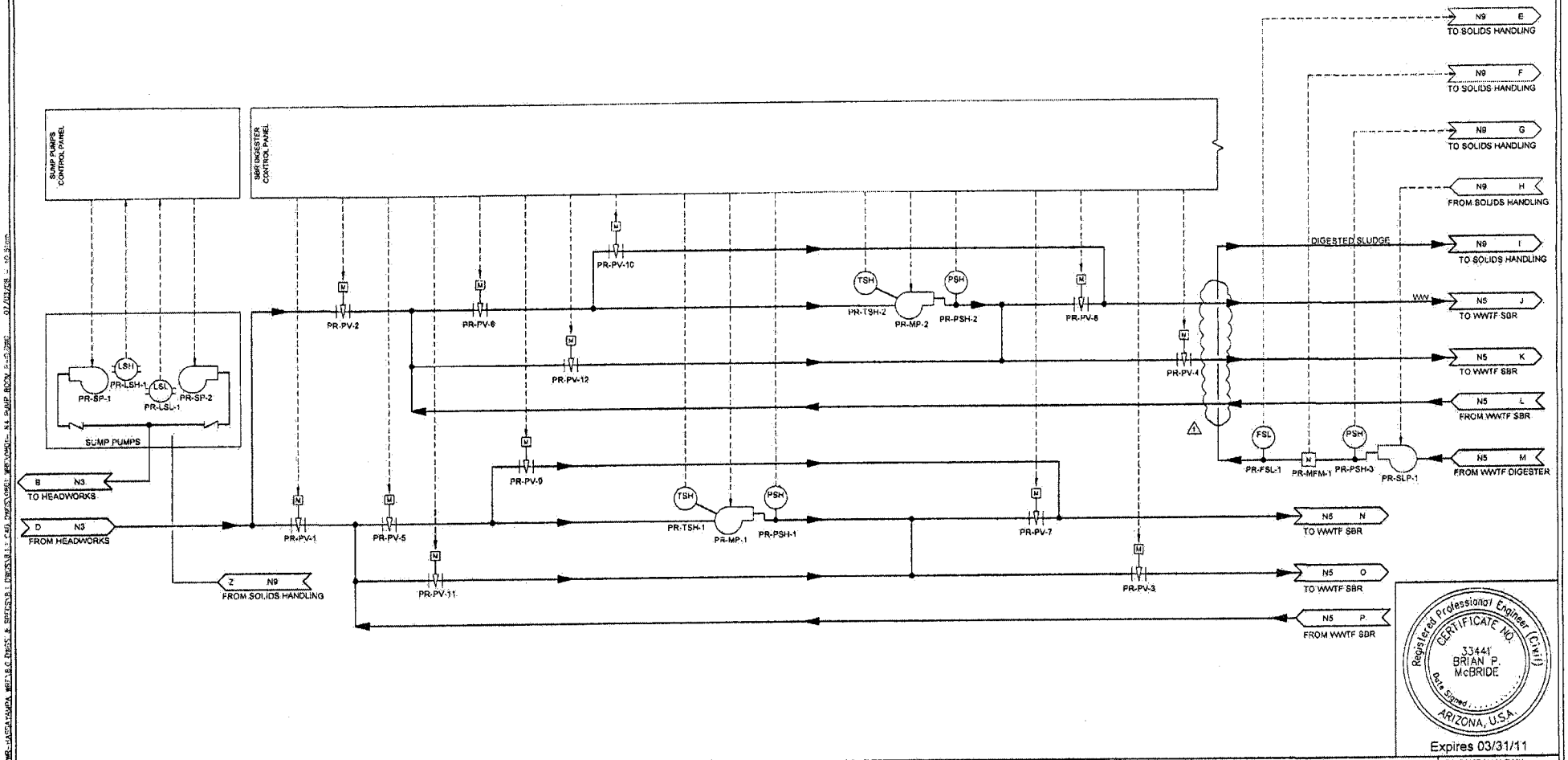

Registered Professional Engineer (Civil)
CERTIFICATE NO. 33441
BRIAN P. McBRIDE
Date Signed
ARIZONA, U.S.A.
Expires 03/31/11

NO.	DATE	BY	REVISION DESCRIPTION
1	6-30-08	MG	PER MCESD REVIEW COMMENTS 6-30-08

GLOBAL WATER
RELIABLE · RENEWABLE · REUSABLE
21410 N. 19th Ave. · Ste. 201 · Phoenix, AZ 85027
Ph: 623.580.9600 · Fax: 623.580.9669
www.gwresources.com

HASSAYAMPA NORTHEAST CAMPUS 1 WATER RECLAMATION FACILITY

McBride Engineering Solutions, Inc.
6100 West Gila Springs Pl., Suite 7
Chandler, AZ. 85226
Phone: (480) 759-9608

PUMP ROOM P&ID

DESIGNED: MJA/DMK
DRAWN: MG/KPB CHECKED: BPM
DATE: 05-30-08
DWG. NO.: N4
SHEET 49 OF 81

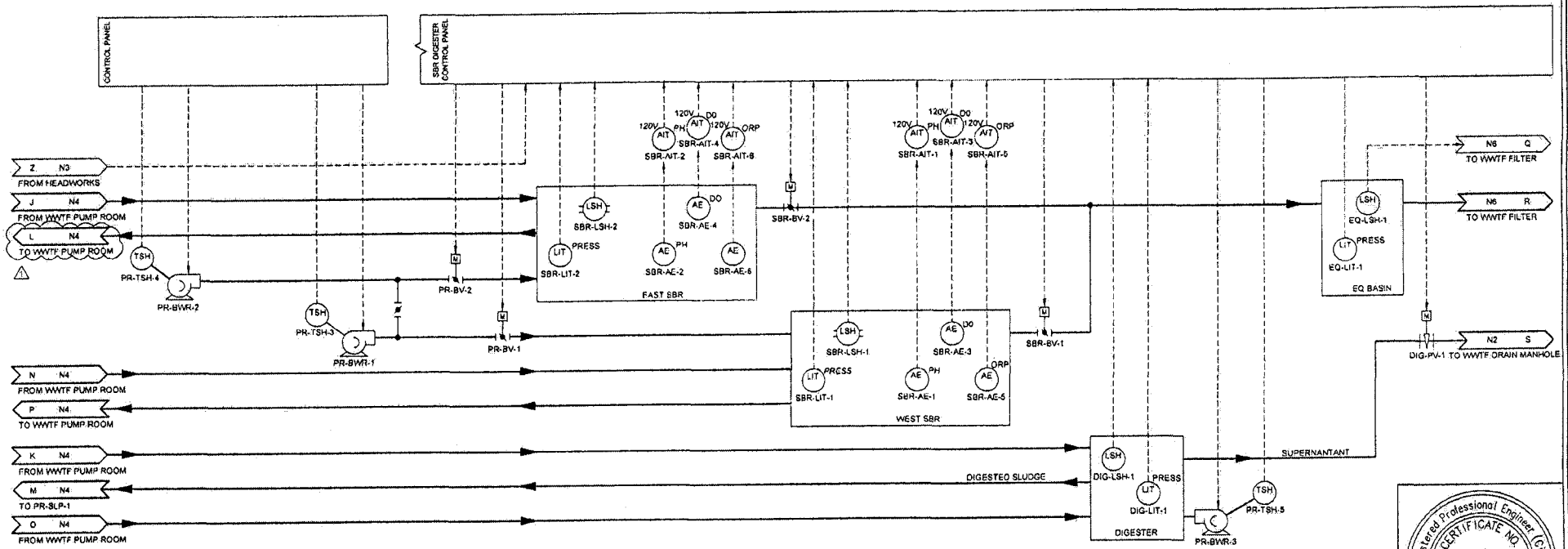

Registered Professional Engineer (Civil)
CERTIFICATE NO. 33441
BRIAN P. McBRIDE
Date Signed
ARIZONA, U.S.A.
Expires 03/31/11

NO.	DATE	BY	REVISION DESCRIPTION
1	6-30-08	MG	PER MCESD REVIEW COMMENTS 6-30-08

GLOBAL WATER
RELIABLE · RENEWABLE · REUSABLE
21410 N. 19th Ave., Ste. 201 · Phoenix, AZ 85027
Ph: 623.580.9600 · Fx: 623.580.9659
www.gwresources.com

HASSAYAMPA NORTHEAST CAMPUS 1 WATER RECLAMATION FACILITY

McBride Engineering Solutions, Inc.
6100 West Gila Springs Pl., Suite 7
Chandler, AZ. 85226
Phone: (480) 759-9608

SBR, EQ BASIN DIGESTER P&ID

DESIGNED: MJA/DMK
DRAWN: MG/KPB CHECKED: BPM
DATE: 05-30-08
DWG. NO. N5
SHEET 50 OF 61

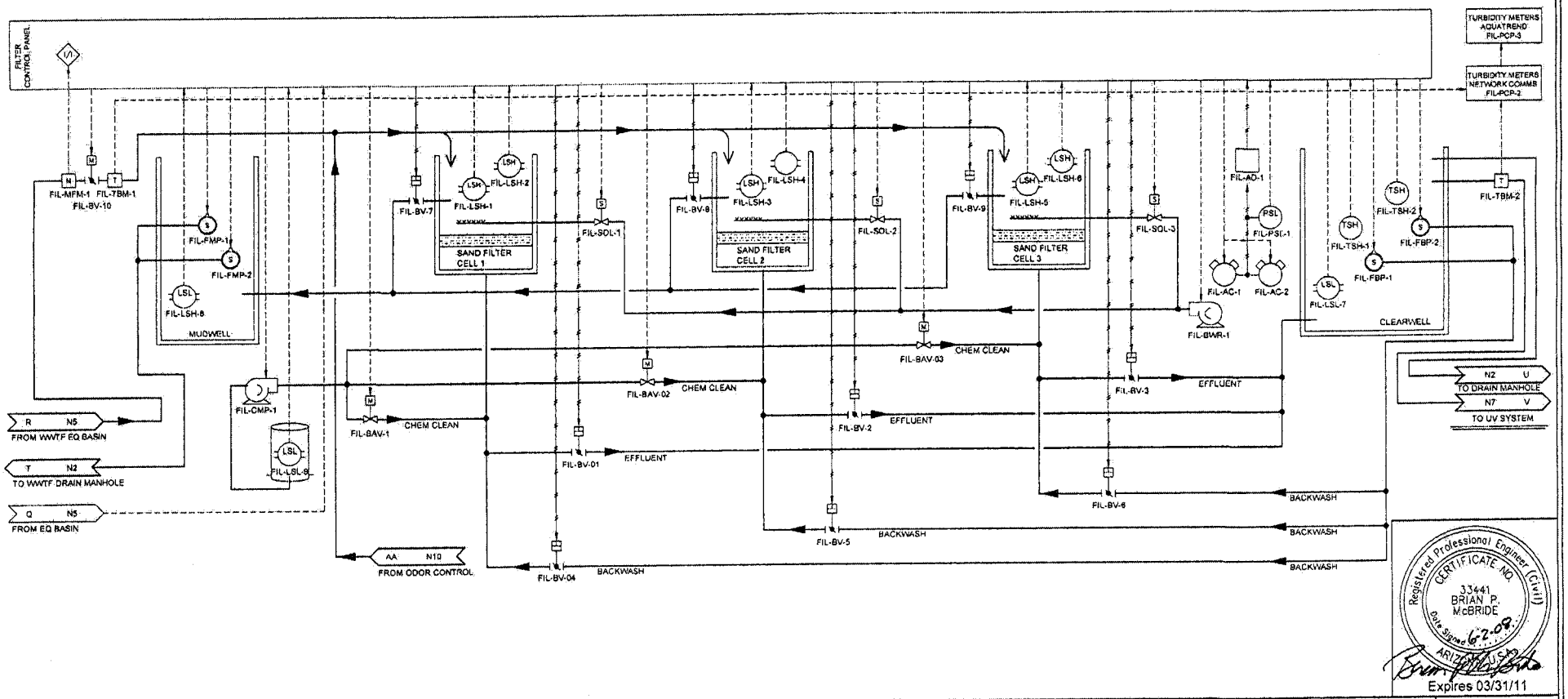

Registered Professional Engineer (Civil) CERTIFICATE NO. 33441 BRIAN P. McBRIDE Date Signed 6-2-08 ARIZONA, U.S.A.

Expires 03/31/11

NO.	DATE	BY	REVISION DESCRIPTION

GLOBAL WATER
RELIABLE · RENEWABLE · REUSABLE
21410 N. 19th Ave. · Ste. 201 · Phoenix, AZ 85027
Ph: 623.580.9600 · Fx: 623.580.9650
www.gwresources.com

HASSAYAMPA NORTHEAST CAMPUS 1 WATER RECLAMATION FACILITY

McBride Engineering Solutions, Inc.
6100 West Gila Springs Pl., Suite 7
Chandler, AZ. 85226
Phone: (480) 759-9608

FILTER P&ID

DESIGNED: MJA/DMK
DRAWN: MGK/KPB CHECKED: BPM
DATE: 05-30-08
DWG. NO. N6
SHEET 51 OF 61

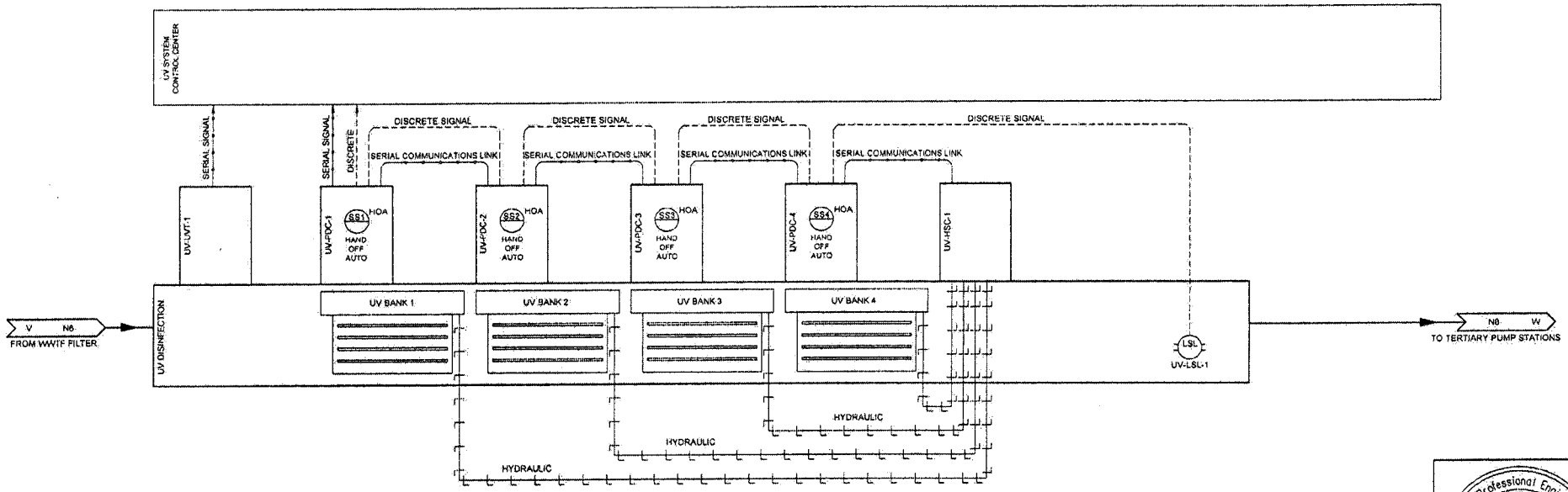

Registered Professional Engineer (Civil)
CERTIFICATE NO. 33441
BRIAN P. McBRIDE
Date Signed 6-2-08
ARIZONA, U.S.A.
Expires 03/31/11

NO.	DATE	BY	REVISION DESCRIPTION

GLOBAL WATER
RELIABLE · RENEWABLE · REUSABLE
21410 N. 19th Ave. · Ste. 201 · Phoenix, AZ 85027
Ph: 623.580.9600 · Fx: 623.580.9669
www.gwresources.com

HASSAYAMPA NORTHEAST CAMPUS 1 WATER RECLAMATION FACILITY

McBride Engineering Solutions, Inc.
6100 West Gila Springs Pl., Suite 7
Chandler, AZ. 85226
Phone: (480) 759-9608

UV DISINFECTION SYS P&ID

DESIGNED: MJA/DMK
DRAWN: MG/KPB CHECKED: BPM
DATE: 05-30-08
DWG. NO. N7
SHEET 52 OF 81

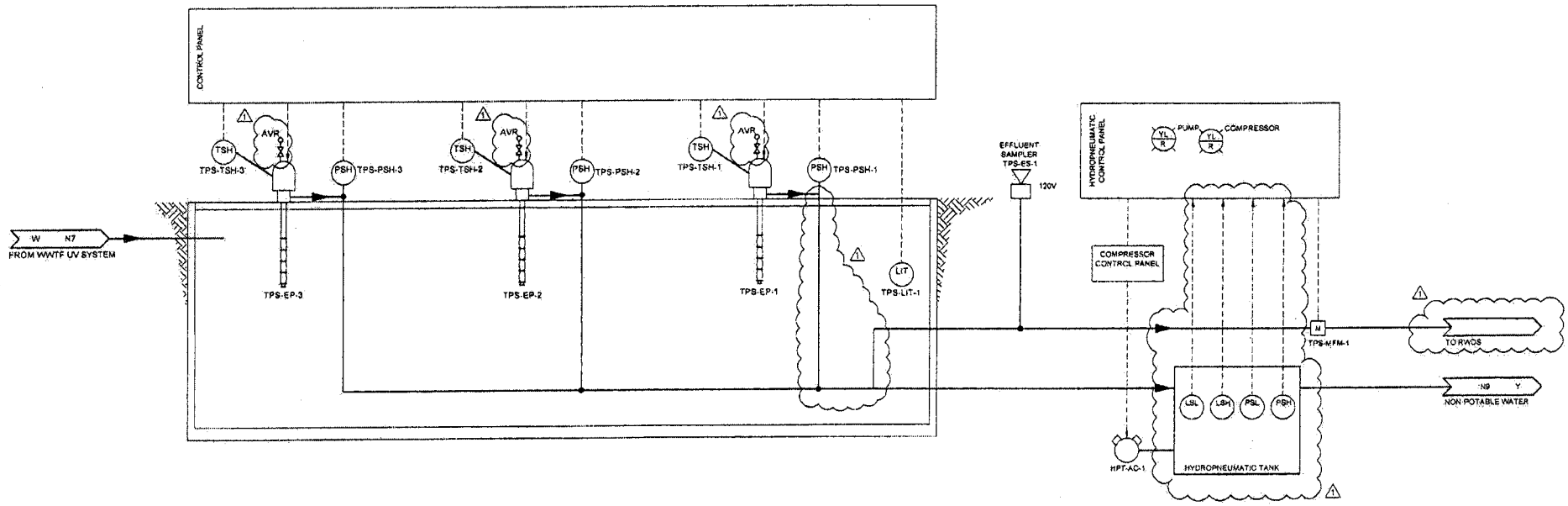

Registered Professional Engineer (Civil)
CERTIFICATE NO. 33441
BRIAN P. McBRIDE
Date Signed
ARIZONA, U.S.A.
Expires 03/31/11

NO.	DATE	BY	REVISION DESCRIPTION
1	6-30-08	MG	PER MCESD REVIEW COMMENTS 6-30-08

GLOBAL WATER
RELIABLE · RENEWABLE · REUSABLE
21410 N. 19th Ave., Ste. 201 · Phoenix, AZ 85027
Ph: 623.580.9000 · Fx: 623.580.9659
www.gwresources.com

HASSAYAMPA NORTHEAST CAMPUS 1 WATER RECLAMATION FACILITY

McBride Engineering Solutions, Inc.
6100 West Gila Springs Pl., Suite 7
Chandler, AZ. 85226
Phone: (480) 759-9808

TERTIARY PUMP STATION P&ID

DESIGNED: MJA/DMK
DRAWN: MG/KPB CHECKED: BPM
DATE: 05-30-08
DWG. NO. N8
SHEET 53 OF 61

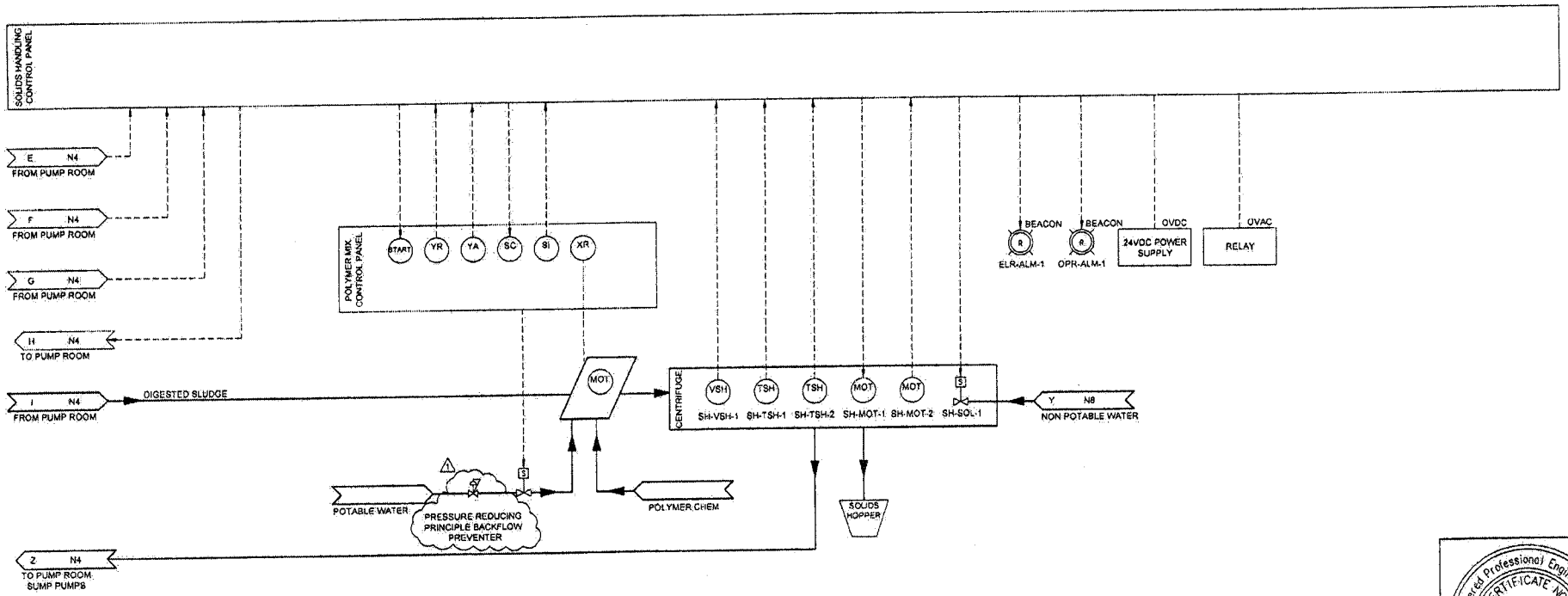

Registered Professional Engineer (Civil)
CERTIFICATE NO. 33441
BRIAN P. McBRIDE
Date Signed
ARIZONA, U.S.A.
Expires 03/31/11

NO.	DATE	BY	REVISION DESCRIPTION
1	6-30-08	MG	PER MCESD REVIEW COMMENTS 6-30-08

GLOBAL WATER
RELIABLE · RENEWABLE · REUSABLE
21410 N. 19th Ave. | Ste. 201 | Phoenix, AZ 85027
Ph: 623.580.9600 · Fx: 623.580.9689
www.gwresources.com

HASSAYAMPA NORTHEAST CAMPUS 1 WATER RECLAMATION FACILITY

McBride Engineering Solutions, Inc.
6100 West Gila Springs Pl., Suite 7
Chandler, AZ. 85226
Phone: (480) 759-9608

SOLIDS HANDLING P&ID

DESIGNED: MJA/DMK
DRAWN: MG/KPB CHECKED: BPM
DATE: 05-30-08
DWG. NO. N9
SHEET 54 OF 61

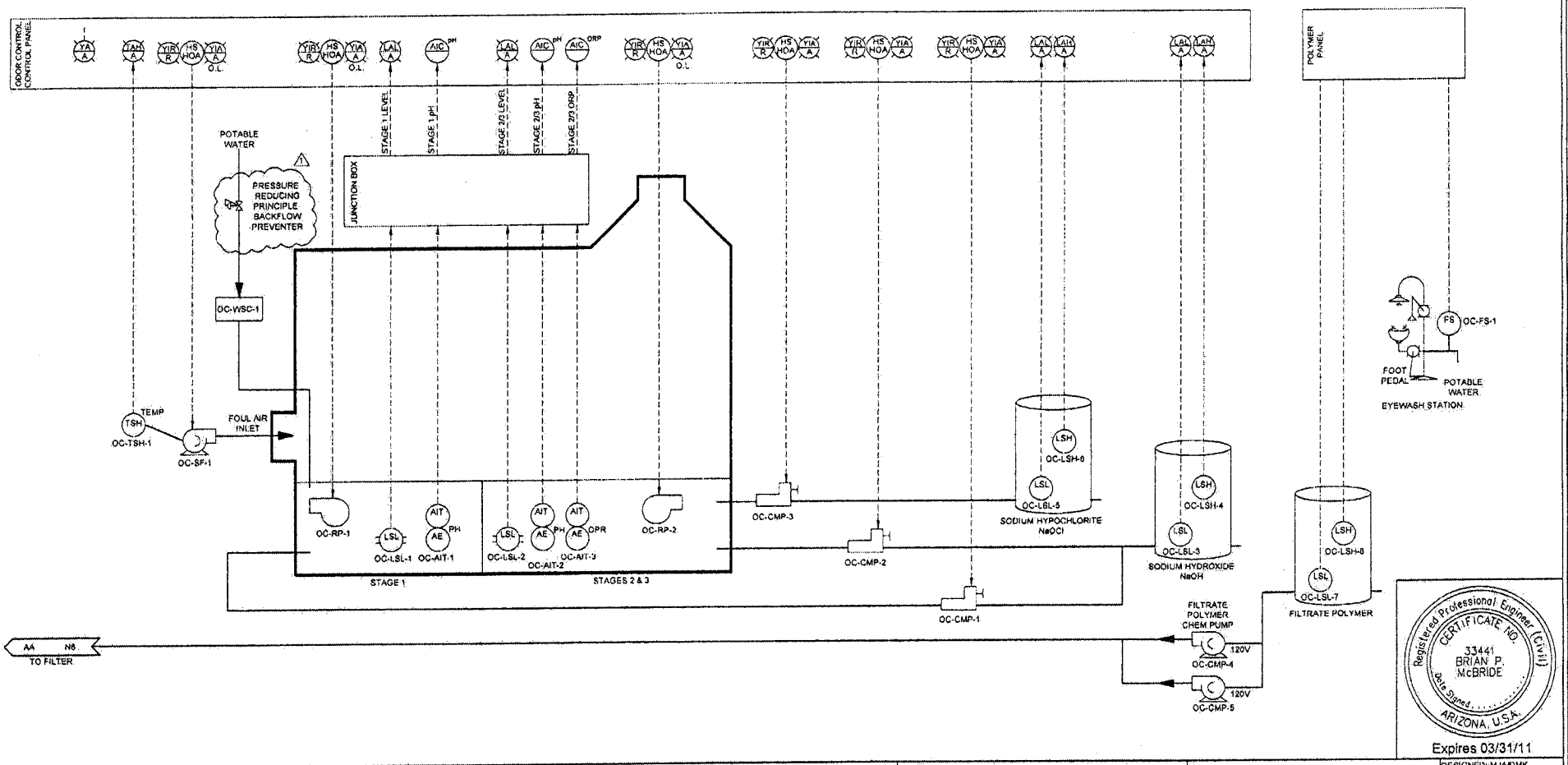

Registered Professional Engineer (Civil)
CERTIFICATE NO. 33441
BRIAN P. McBRIDE
Date Signed
ARIZONA, U.S.A.
Expires 03/31/11

NO.	DATE	BY	REVISION DESCRIPTION
1	6-30-08	MG	PER MCESD REVIEW COMMENTS 6-30-08

GLOBAL WATER
RELIABLE · RENEWABLE · REUSABLE
21410 N. 19th Ave. · Ste. 201 · Phoenix, AZ 85027
Ph: 623.580.9600 · Fx: 623.580.9659
www.gwresources.com

HASSAYAMPA NORTHEAST CAMPUS 1 WATER RECLAMATION FACILITY

McBride Engineering Solutions, Inc.
6100 West Gila Springs Pl., Suite 7
Chandler, AZ. 85226
Phone: (480) 759-9608

ODOR CONTROL P&ID

DESIGNED: MJA/DMK
DRAWN: MG/KPB CHECKED: BPM
DATE: 06-30-08
DWG. NO. N10
SHEET 55 OF 61

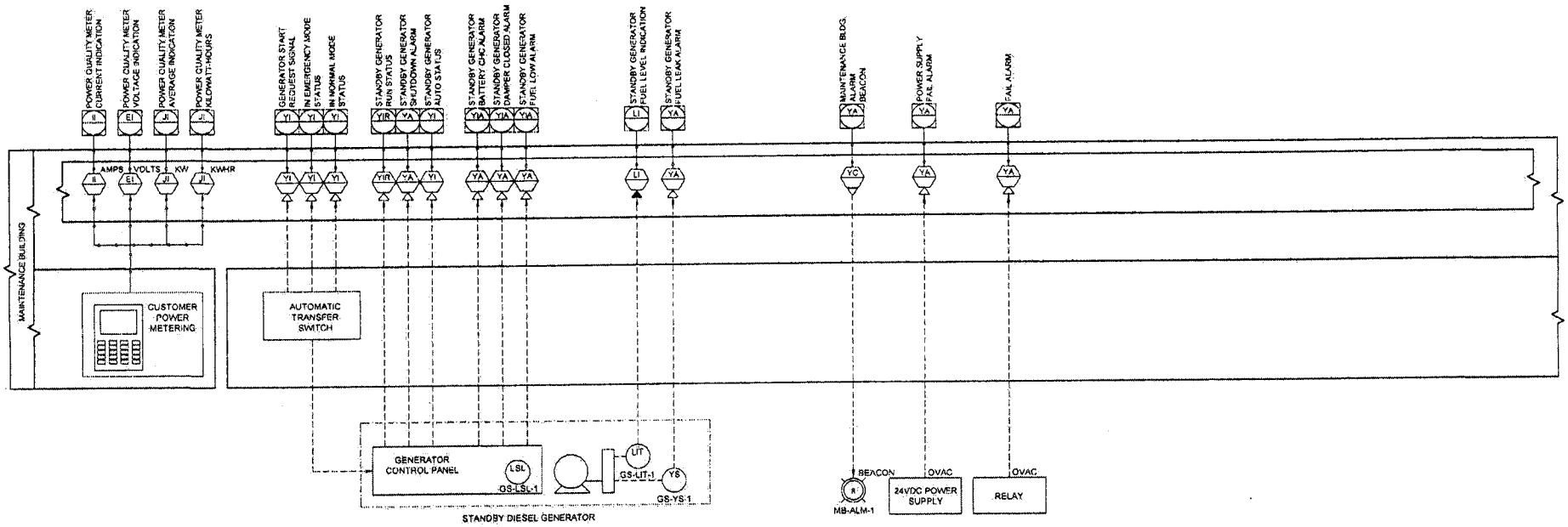

Registered Professional Engineer (Civil)
CERTIFICATE NO. 33441
BRIAN P. McBRIDE
Date Signed 6-2-08
ARIZONA U.S.A.
Expires 03/31/11

NO	DATE	BY	REVISION DESCRIPTION

GLOBAL WATER
RELIABLE · RENEWABLE · REUSABLE
21410 N. 19th Ave. · Ste 201 · Phoenix, AZ 85027
Ph: 623.580.9600 · Fx: 623.580.9659
www.gwresources.com

HASSAYAMPA NORTHEAST CAMPUS 1 WATER RECLAMATION FACILITY

McBride Engineering Solutions, Inc.
6100 West Gila Springs Pl., Suite 7
Chandler, AZ. 85226
Phone: (480) 759-9608

BACKUP POWER PLANT OPERATIONS P&ID

DESIGNED: MJA/DMK
DRAWN: MGK/KPB CHECKED: BPM
DATE: 05-30-08
DWG. NO. N11
SHEET 50 OF 61

POWER SINGLE LINE AND SCHEMATIC DIAGRAM SYMBOLS

- CR — CONTROL RELAY
- TD — TIME DELAY RELAY
- AR — ALARM RELAY
- ETM — ELAPSED TIME METER
- M — MOTOR STARTER OR CONTACTOR COIL
- PC — PHOTO CELL
- R — BEACON ALARM LIGHT LETTER INDICATES COLOR R=RED, A=AMBER, B=BLUE, G=GREEN
- R — PILOT LIGHT LETTER INDICATES COLOR R=RED, A=AMBER, B=BLUE, G=GREEN
- OUTPUT DV/DT FILTER
- HEATING ELEMENT
- TRANSFORMER
- CURRENT TRANSFORMER
- GROUND CONNECTION
- GENERATOR
- HORN — HORN
- FULL VOLTAGE NONREVERSING (FVNR) MOTOR STARTER OR CONTACTOR NUMBER DESIGNATES NEMA SIZE
- NORMALLY OPEN CONTACT
- NORMALLY CLOSED CONTACT
- RTU OR PLC CONTACT
- HAND AUTO XO — 2 POSITION SELECTOR SWITCH POSITION LEGEND: X=CLOSED O-OPEN
- HAND OFF AUTO XOO — 3 POSITION SELECTOR SWITCH HAND - OFF - AUTO POSITION LEGEND: X=CLOSED O=OPEN
- NORMALLY CLOSED BUTTON
- LOCKOUT STOP PUSH BUTTON
- NORMALLY OPEN PUSH BUTTON
- EMERGENCY STOP PUSH BUTTON (MAINTAINED)
- AMPS POLES — DISCONNECT SWITCH SHOWN WITH RATING AND NUMBER OF POLES
- LIMIT OR POSITION SWITCH
- PSH — PRESSURE SWITCH HIGH
- PSL — PRESSURE SWITCH LOW
- FLOW SWITCH
- LEVEL FLOAT SWITCH
- TC/TO — TIMER RELAY CONTACT INSTANTANEOUS CLOSE TIME DELAY OPEN
- NOTC — TIMER RELAY CONTACT NORMALLY OPEN TIME DELAY CLOSE
- TEMPERATURE SWITCH
- THERMAL OVERLOAD RELAY
- TERMINAL BLOCK
- DEVICE LOCATED AT REMOTE LOCATION
- CONDUIT SEALOFF
- JUNCTION BOX WITH POWER DISTRIBUTION BLOCK OR LUGS
- MMR — MOTOR MANAGEMENT RELAY
- SSS — SOLID STATE STARTER
- VFD — VARIABLE FREQUENCY DRIVE
- HF — HARMONIC FITLER
- EOL — ELECTRONIC OVERLOAD RELAY
- LTC CONNECTION
- MC CONNECTION
- HP — MOTOR, NUMBER DESIGNATES NEMA HORSEPOWER SIZE
- BOND TO METALLIC WATER PIPE
- AMPS — FUSEHOLDER OR FUSEBLOCK
- AMPS POLES — CIRCUIT BREAKER, SHOWN WITH TRIP RATING AND NUMBER OF POLES
- AMPS MCP POLES — MOTOR CIRCUIT PROTECTOR WITH TRIP RATING AND NUMBER OF POLES
- AMPS POLES — DISCONNECT SWITCH SHOWN WITH RATING AND NUMBER OF POLES
- UM — UTILITY METER
- AUTOMATIC TRANSFER SWITCH

SITE PAN SYBMOLS

- TELEPHONE OUTLET
- $ — SINGLE POLE SWITCH
- $3 — 3 WAY SWITCH
- $4 — 4-WAY SWITCH
- $M — MANUAL MOTOR STARTER
- S — SMOKE DETECTOR
- THERMOSTAT
- DISCONNECT SWITCH
- FIELD DEVICE
- GROUND ROD
- CONDUIT SEALOFF
- DUPLEX RECEPTACLE
- ANTENNA MAST
- M — MOTOR
- CONDUIT HOME RUN NUMBER INDICATES QUANTITY OF CONDUCTORS INCLUDING GROUND
- SPECIAL PURPOSE OR WELDING OUTLET

ELECTRICAL LINETYPES

- EXPOSED CONDUIT
- EXISTING EXPOSED CONDUIT
- UNDERGROUND CONDUIT
- EXISTING UNDERGROUND CONDUIT
- BARE COPPER GROUND CONDUCTOR
- EXISTING OR FUTURE
- NEW ELECTRICAL EQUIPMENT
- DEMOLITION
- DETAIL VIEW OR MATCHING
- CAPPED CONDUIT STUB OUT

ELECTRICAL SHEET ABBREVIATIONS

A	AMPERE
AFD	ADJUSTABLE FREQUENCY DRIVE
AFF	ABOVE FINISHED FLOOR
AI	ANALOG INPUT
AIC	AMPS INTERRUPTING CAPACITY
AO	ANALOG OUTPUT
AS	AIR SUPPLY
ATS	AUTOMATIC TRANSFER SWITCH
BC	BYPASS CONTACTOR
C	CONDUIT
CB	CIRCUIT BREAKER
CCW	COUNTER CLOCKWISE
CL2	CHLORINE
CON	CONTACTOR
CPB	CONTROL PULLBOX
CU	CPPER, BARE
CV	CONTROL VALVE
CW	CLOCKWISE
DCS	DISTRIBUTED CONTROL SYSTEM
DI	DISCRETE INPUT
DO	DISCRETE OUTPUT
DS	DISCONNECT SWITCH
DV/DT	DIFFERENTAL VOLTAGE/TIME
DWG	DRAWING
ETM	ELAPSED TIME METER
EOL	ELECTRONIC OVERLOAD
EXIST	EXISTING
FA	FOUL AIR
FC	FAIL CLOSER
FE	FLOW ELEMENT
FLA	FULL LOAD AMPS
FS	FLOW SWITCH
FVNR	FULL VOLTAGENON-REVERSING
FW	FINISHED WATER
GFCI	GROUND FAULT CIRCUIT INTERRUPTER
GFP	GROUND FAULT PROTECTION
GND	GROUND
GPD	GALLONS PER DAY
GPH	GALLONS PER HOUR
GPM	GALLONS PER MINUTE
GRS	GALVANIZED RIGID STEEL
H, HI	HIGH
H2S	HYDROGEN SULFIDE
HMI	HUMAN MACHINE INTERFACE
HOA	HAND-OFF-AUTO
HOR	HAND-OFF-REMOTE
I	CURRENT
IC	INSTRUMENTATION CABLE
ICR	INTERMITTENT CYCLE REATOR
IO	INPUT/OUTPUT
ISC	SHORT CIRCUIT CURRENT
JB	JUNCTION BOX
L, LO	LOW
LAN	LOCAL AREA NETWORK
LC	LOOP CONTROLLER
LCL	LEVEL CONTROL, LOW
LCP	LOCAL CONTROL PANEL
LOS	LOCK-OUT-STOP
LOR	LOCAL/OFF/REMOTE
LS	LEVEL (i.e. FLOAT) SWITCH
LTC	LIQUID TIGHT FLEXIBLE CONDUIT
M	MOTOR
MA	MANUAL/AUTO
mA	MILLIAMP
MAX	MAXIMUM
MC	MANUFACTURER'S CABLE
MCB	MAIN CIRCUIT BREAKER
MCC	MOTOR CONTROL CENTER
MCP	MOTOR CIRCUIT PROTECTOR
MFR(S)	MANUFACTURER(S)
MGD	MILLION GALLONS PER DAY
MGL	MILLIGRAMS PER LITER
MH	MANHOLE
MIN.	MINIMUM
MOV	MOTOR OPERATED VALVE
MMR	MOTOR MANAGEMENT RELAY
MTU	MASTER TELEMETRY UNIT
NaOCL	SODIUM HYPO CHLORIDE
NaOH	SODIUM HYROXIDE
NEC	NATIONAL ELECTRICAL CODE
NECA	NATIONAL ELECTRICAL CONTRACTOR ASSOCIATION
N.C.	NORMALLY CLOSED
N.O.	NORMALLY OPEN
NOTC	NORMALLY OPENED TIMED CLOSED
NPW	NON-POTABLE WATER
NS	NITROGEN SUPPLY
NTS	NOT TO SCALE
NTU	TURBIDITY
OF	OVERFLOW
OIT	OPERATOR INTERFACE TERMINAL
OL	OVERLOAD
OLR	OVERLOAD RELAY
OO	ON/OFF (MAINTAINED)
OR	OFF-REMOTE
OSC	OPEN/STOP/CLOSE
P	PHASE
PB	PULL BOX
PCP	PROCESS CONTROL PANEL
PFR	PHASE/POWER FAILURE RELAY
PI	PULSE INPUT
PLG	PROGRAMMABLE LOGIC CONTROLLER
PLI	PLANT INFLUENT
PMP	PUMP
PNL	PANEL
PO.	PULSE OUTPUT
PPB	POWER PULLBOX
PPG.	POUNDS PER GALLON
PPH	POUNDS PER HOUR
PPM.	PARTS PER MILLION
PR	PAIR
PRES	PRESSURE
PS	PRESSURE SWITCH
PSH	PRESSURESWITCH, HIGH
PSI	POUNDS PER SQUARE INCH
PV	PROCESS VARIABLE
RAS	RETURN ACTIVATED SLUDGE
RW	RAW WATER
RF	RADIO FREQUENCY
RIO	REMOTE INPUT OUTPUT
RS	RAW SEWAGE
RSP	RAW SEWAGE PUMP
RST	RESET
RTD	RESISTANCE TEMPERATURE DETECTOR
RTU	REMOTE TELEMETRY UNIT
RWT	REFLECTED WAVE TRAP
SBR	SEQUENCE BATCH REACTOR
SCA	SHORT CIRCUIT AMPS
SEQ	SERVICE ENTRANCE EQUIPMENT
SES	SERVICE ENTRANCE SECTION
SLC	SINGLE LOOP CONTROLLER
SLOS	START-LOCK-OFF-STOP
SMC	SUBMERSIBLE MANUFACTURER CABLE
SO2	SULFUR DIOXIDE
SP	SET POINT
SPC	SPARE CONDUIT
SPR	SPARE
SS	START/STOP
SSS	SOLID STATE STARTER (SOFT START)
ST	SHUNT TRIP
TC	TELEPHONE CABLE
TS	TEMPERATURE SWITCH
TVSS	TRANSIENT VOLTAGE SURGE SUPPRESSOR
TYP	TYPICAL
UG	UNDERGROUND
V	VOLT
VFD	VARIABLE FREQUENCY DRIVE
VFD	VARIABLE FREQUENCY DRIVE
W	WATT, WIRE
WAS	WASTE ACTIVATED SLUDGE
WP	WEATHERPROOF
XFMR	TRANSFORMER
XMR	TRANSFORMER
XMTR	TRANSMITTER
ZS	POSITION (i.e. LIMIT) SWITCH

GENERAL NOTES

1. THE ELECTRICAL REQUIREMENT DRAWINGS PROVIDED HERE ARE INTENDED TO DEFINE THE SCOPE OF THE ELECTRICAL WORK AND BASIS FOR THE ELECTRICAL DESIGN. THE CONTRACTOR SHALL SUBMIT DETAILED ELECTRICAL DESIGN DRAWINGS IN COMPLIANCE WITH THESE REQUIREMENTS THAT MUST BE APPROVED PRIOR TO COMMENCING WORK ON ANY ELECTRICAL CONSTRUCTION.

2. THE COMPLETED INSTALLATION SHALL COMPLY WITH APPLICABLE FEDERAL, STATE, AND LOCAL CODES, ORDINANCES AND, REGULATIONS. THE CONTRACTOR SHALL OBTAIN NECESSARY PERMITS AND INSPECTIONS REQUIRED BY THE AUTHORITIES HAVING JURISDICTION. ALL WORK SHALL BE COMPLETED IN A NEAT, WORKMANLIKE MANNER IN ACCORDANCE WITH THE LATEST NECA STANDARDS OF INSTALLATION UNDER COMPETENT SUPERVISION. INSTALL GROUNDING PER NEC.

3. VISIT THE SITE PRIOR TO BIDDING TO BECOME FAMILIAR WITH EXISTING CONDITIONS AND OTHER FACTORS, WHICH MAY EFFECT THE EXECUTION OF THE WORK. INCLUDE ALL RELATED COSTS IN THE INITIAL BID PROPOSAL.

4. THE CONTRACTOR SHALL COORDINATE WORK WITH THE UTILITIES PROVIDING SERVICES ON THIS PROJECT, AND SHALL COMPLY WITH ALL THEIR INSTALLATION REQUIREMENTS.

5. ALL MATERIALS SHALL BE NEW AND OF THE BEST QUALITY, MANUFACTURED IN ACCORDANCE WITH NEMA, ANSI, UL, OR OTHER APPLICABLE STANDARDS. THE USE OF MANUFACTURERS' NAMES, MODELS, AND NUMBERS IS INTENDED TO ESTABLISH STYLE, QUANTITY, APPEARANCE, USEFULNESS, AND BID PRICE.

6. PROTECT ALL ELECTRICAL MATERIAL AND EQUIPMENT INSTALLED AGAINST DAMAGE BY OTHER TRADES, WEATHER CONDITIONS, OR ANY OTHER PREVENTABLE CAUSES. EQUIPMENT DAMAGED DURING SHIPPING OR CONSTRUCTION, PRIOR TO ACCEPTANCE BY THE ENGINEER OR THE OWNER, WILL BE REJECTED AS DEFECTIVE.

7. LEAVE THE SITE CLEAN. REMOVE ALL DEBRIS, EMPTY CARTONS, TOOLS, CONDUIT, WIRE SCRAPS, AND ALL MISCELLANEOUS SPARE EQUIPMENT AND MATERIALS USED IN THE WORK DURING CONSTRUCTION. ALL COMPONENTS SHALL BE FREE OF DUST, GRIT, AND FOREIGN MATERIALS, LEFT AS NEW BEFORE FINAL ACCEPTANCE OF WORK. DAMAGED PAINT AND FINISHES SHALL BE TOUCHED UP OR REPAINTED WITH MATCHING COLOR AND FINISH.

8. UNDERGROUND CONDUITS SHALL BE SCHEDULE 40 PVC. MINIMUM CONDUIT DEPTH SHALL BE 24 INCHES. MINIMUM UNDERGROUND CONDUIT SIZE SHALL BE 1 INCH.

9. CONDUITS SHALL BE MARKED AT EACH END WITH MATCHING NUMBERED BRASS TAGS. SPARE CONDUITS SHALL HAVE A PULL STRING INSTALLED AND SECURED.

10. EXPOSED CONDUITS SHALL BE GALVANIZED RIGID STEEL (GRS). MINIMUM SIZE 3/4 INCH, UNLESS OTHERWISENOTED ON THE PLANS.

11. SAFETY SWITCHES, ELECTRICAL DISTRIBUTION EQUIPMENT, CONTROL PANELS, AND OTHER ELECTRICAL DEVICES SHALL BE UL LISTED, AND RATED FOR HEAVY DUTY SERVICE.

12. WIRING DEVICES SHALL BE SPECIFICATION GRADE.

13. THE CONTRACTOR IS RESPONSIBLE FOR MANAGING, SCHEDULING, DOCUMENTING, AND PERFORMING THE WORK SO THAT A COMPLETE ELECTRICAL, INSTRUMENTATION AND CONTROL SYSTEM FOR THE FACILITY IS PROVIDED. ACCURATE SHOP AND RECORD DRAWINGS, AND O&M MANUALS SHALL BE SUBMITTED PRIOR TO FINAL ACCEPTANCE OF THE WORK.

14. TYPICAL DETAILS SHALL APPLY IN ALL CASES, WHETHER SPECIFICALLY REFERRED TO OR NOT.

Registered Professional Engineer (Civil) CERTIFICATE NO. 33441 BRIAN P. McBRIDE Date Signed 6-2-08 ARIZONA, U.S.A.
Expires 03/31/11

NO.	DATE	BY	REVISION DESCRIPTION

GLOBAL WATER RELIABLE · RENEWABLE · REUSABLE
21410 N. 19th Ave., Ste. 201 • Phoenix, AZ 85027 Ph: 623.580.9600 • Fx: 623.580.9659 www.gwresources.com

HASSAYAMPA NORTHEAST CAMPUS 1 WATER RECLAMATION FACILITY

McBride Engineering Solutions, Inc.
6100 West Gila Springs Pl., Suite 7
Chandler, AZ. 85226
Phone: (480) 759-9608

ELECTRICAL REQUIREMENTS

NOTE, SYMBOLS, AND ABBREVIATIONS

DESIGNED: MJA/DMK
DRAWN: MGKPB CHECKED: BPM
DATE: 06-30-08
DWG. NO. E1
SHEET 57 OF 61

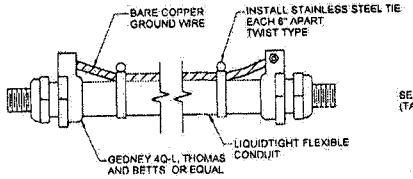

404 TYP — FLEXIBLE CONDUIT GROUNDING
NOT TO SCALE

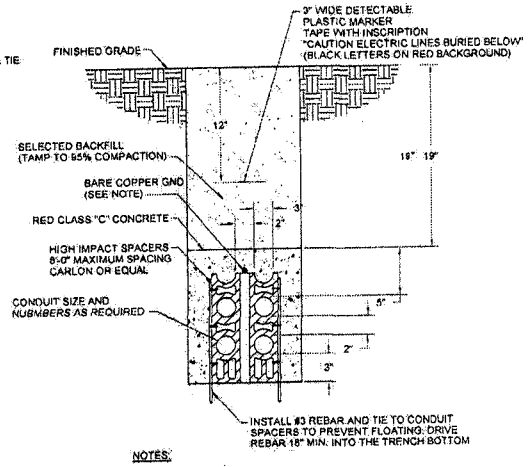

NOTES:

1. GROUND CONDUCTOR SHALL RUN CONTINUOUSLY THROUGH MANHOLES AND SHALL CONTINUE FROM DUCTBANK INTO SWITCHGEAR OR BUILDING GROUNDING SYSTEM AND SHALL BE BONDED TO EACH RIGID METAL CONDUIT. SIZE TO BE #4/0 UNLESS OTHERWISE INDICATED ON PLANS.

2. ALL DIMENSIONS ARE MINIMUM.

105 TYP — DUCTBANK - CONCRETE ENCASED
NOT TO SCALE

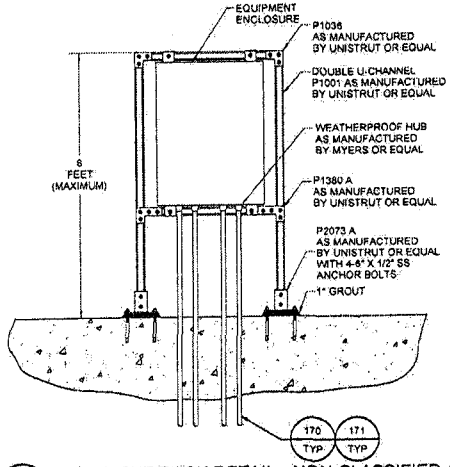

207 TYP — EQUIPMENT RACK DETAIL - NON-CLASSIFIED AREAS
NOT TO SCALE

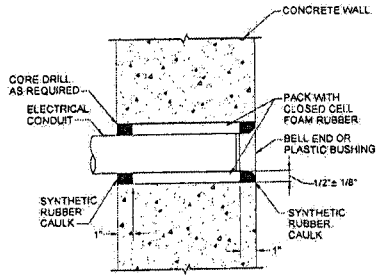

151 TYP — MANHOLE PENETRATION
NOT TO SCALE

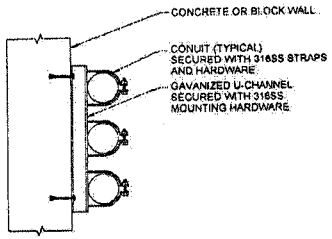

161 TYP — CONDUIT ON WALL INSTALLATION DETAIL
NOT TO SCALE

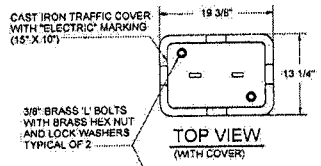

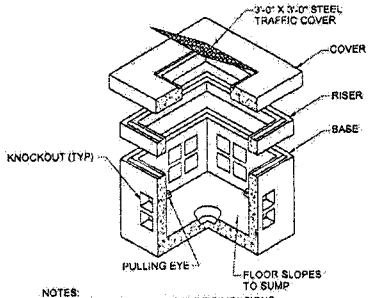

NOTES:
3'-11" X 3' X 4'-1" MINIMUM INSIDE DIMENSIONS.
INSTALL A GROUND ROD AND CONNECT TO DUCT BANK GROUND.
TRAIN CABLES AROUND INTERIOR PERIMETER ON CABLE RACKS.

333 TYP — CONCRETE PULLBOX WITH HINGED COVER
NOT TO SCALE

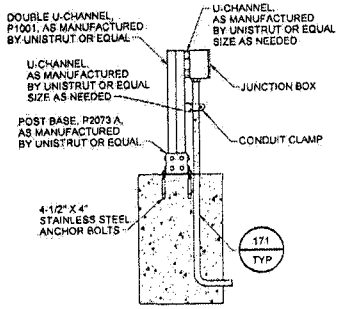

202 TYP — JUNCTION BOX MOUNTING DETAIL
NOT TO SCALE

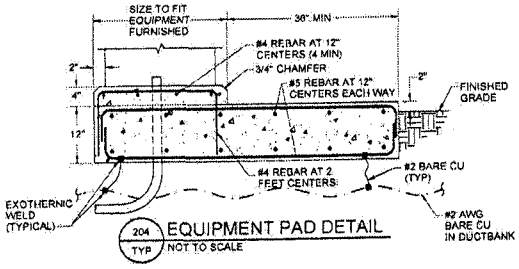

204 TYP — EQUIPMENT PAD DETAIL
NOT TO SCALE

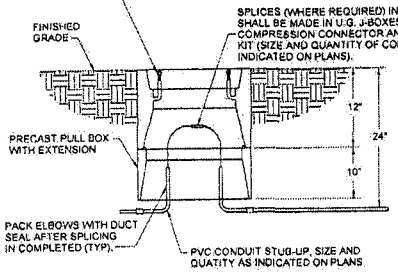

NOTE: ALL DIMENSIONS ARE MINIMUM

316 TYP — UNDERGROUND CONCRETE JUNCTION BOX
NOT TO SCALE

Registered Professional Engineer (Civil)
CERTIFICATE NO. 33441
BRIAN P. McBRIDE
Date Signed 6-2-08
ARIZONA U.S.A.
Expires 03/31/11

NO.	DATE	BY	REVISION DESCRIPTION

GLOBAL WATER
RELIABLE · RENEWABLE · REUSABLE
21410 N. 19th Ave. · Ste. 201 · Phoenix, AZ 85027
PH: 623.580.9600 · FX: 623.580.9655
www.gwresources.com

HASSAYAMPA NORTHEAST CAMPUS 1 WATER RECLAMATION FACILITY

McBride Engineering Solutions, Inc.
6100 West Gila Springs Pl., Suite 7
Chandler, AZ. 85226
Phone: (480) 759-9608

ELECTRICAL REQUIREMENTS
APPURTENANCE DETAILS

DESIGNED: MJA/DMK
DRAWN: MQ/KPB | CHECKED: BPM
DATE: 05-30-08
DWG. NO. E2
SHEET 58 OF 81

DEVICE FUNCTION LEGEND:

- (50) INSTANTANEOUS OVERCURRENT
- (51) INVERSE TIME OVERCURRENT
- (51G) GROUND FAULT

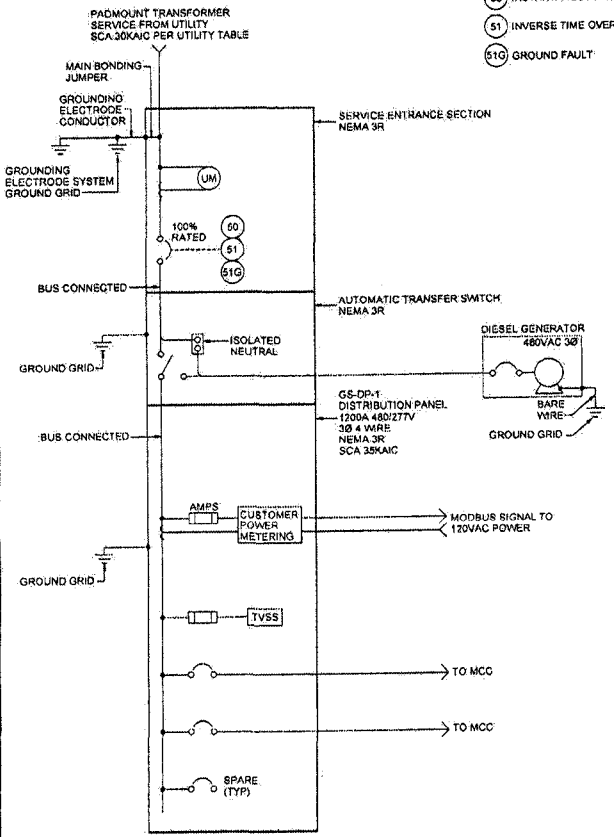

A SES, ATS & DP SINGLE LINE SCHEMATIC

NOTES:

1. LOAD PARAMETERS SHOWN ARE ESTIMATED. CONTRACTOR SHALL PROVIDE LOAD CALCULATIONS BY A REGISTERED ELECTRICAL ENGINEER PRIOR TO CONSTRUCTION.
2. ALL SHORT CIRCUIT INTERRUPTING AND PROTECTING DEVICES SHALL HAVE A SHORT CIRCUIT INTERRUPTING RATING EQUAL TO OR GREATER THAN THE AVAILABLE SHORT CIRCUIT ON THE BUS.
3. FUSES SHALL BE SIZED PER THE EQUIPMENT MANUFACTURER'S RECOMMENDATIONS.
4. A SIGN SHALL BE PLACED AT THE SERVICE ENTRANCE EQUIPMENT INDICATING TYPE AND LOCATION OF ON-SITE EMERGENCY POWER SOURCES IN ACCORDANCE WITH NEC 700-8 (a).
5. WHERE A STANDBY SOURCE GROUNDED CIRUIT CONDUCTOR IS CONNECTED TO A GROUNDING ELECTRODE CONDUCTOR REMOTE FROM THE STANDBY SOURCE, A SIGN SHALL BE PLACED AT THE GROUNDING LOCATION IDENTIFYING ALL STANDBY AND NORMAL SOURCES CONNECTED AT THAT LOCATION.
6. PROVIDE CONDUIT, TRENCHING, AND BACKFILL PER UTILITY REQUIREMENTS.

DESCRIPTION	KVA	HP	FLA
HEADWORKS			
COMBI UNIT PROCESS CONTROL PANEL	20.0		24.1
MUFFIN MONSTER PROCESS CONTROL PANEL	13.3		16.0
HEADWORKS SUPPLY FAN		.75	1.5
PUMP ROOM/SBR/DIGESTER/EQ BASIN			
PUMP ROOM SUPPLY FAN		3	6.0
MOTIVE PUMP 1		50	65.0
MOTIVE PUMP 2		50	65.0
DIGESTED SLUDGE PUMP		7.5	11.0
SUMP PUMP PROCESS CONTROL PANEL	13.3		16.0
PUMP ROOM EXHAUST FAN		.75	1.5
WEST SBR BLOWER 1		75	90.0
EAST SBR BLOWER 2		75	96.0
DIGESTER SBR BLOWER 3		60	77.0
PUMP ROOM MOTORIZED VALVES (WEST)	6.6		7.9
PUMP ROOM MOTORIZED VALVES (EAST)	6.6		7.9
SBR DECANT MOTORIZED VALVES (SOUTH)	2.5		3.0
SOLIDS HANDLING			
CENTRIFUGE PROCESS CONTROL PANEL	67.0		80.6
SOLIDS HANDLING SUPPLY FAN		.75	1.5
SBR WEST SUPPLY FAN		.75	1.5
SBR EAST SUPPLY FAN		.75	1.5
ELECTRICAL BUILDING			
NORTH TRANSFORMER	75		90.2
+25% OF LARGEST MOTOR LOAD		75	24.0
SUBTOTAL			592.2

DESCRIPTION	KVA	HP	FLA
DRAIN MANHOLE			
DRAIN MANHOLE INFLUENT PUMP 1		10	14.0
DRAIN MANHOLE INFLUENT PUMP 2		10	14.0
FILTER			
FILTER PROCESS CONTROL PANEL	50.0		60.1
UV DISINFECTION SYSTEM			
POWER DISTRIBUTION CENTER 1	6.2		7.5
POWER DISTRIBUTION CENTER 2	6.2		7.5
POWER DISTRIBUTION CENTER 3	6.2		7.5
POWER DISTRIBUTION CENTER 4	6.2		7.5
HYDRO PHEUMATIC SYSTEM			
HYDRO PHEUMATIC PROCESS CONTROL PANEL	13.3		16.0
TERTIARY PUMP STATION			
TERTIARY EFFLUENT PUMP 1		20	27.0
TERTIARY EFFLUENT PUMP 2 (HYDROTANK)		15	21.0
TERTIARY EFFLUENT PUMP 3 (HYDOTANK)		15	21.0
ODOR CONTROL			
ODOR CONTROL PROCESS CONTROL PANEL	46.5		55.9
MAINTENANCE BUILDING			
SOUTH TRANSFORMER	75		90.2
MAINTENANCE BLG SUPPLY FAN		.75	1.5
+25% OF LARGEST MOTOR LOAD		20	6.8
SUBTOTAL			357.5

SUBTOTAL			592.2
SUBTOTAL			357.5
DISTRIBUTION PANEL TOTAL AMP @ 480 3Ø			1049.7
SERVICE SIZE (AMPS)			1200

B LOAD PARAMETERS

Registered Professional Engineer (Civil)
CERTIFICATE NO. 33441
BRIAN P. McBRIDE
Date Signed 6-2-08
ARIZONA
Expires 03/31/11

NO.	DATE	BY	REVISION DESCRIPTION

GLOBAL WATER
RELIABLE · RENEWABLE · REUSABLE
2140 N. 19th Ave. · Ste. 201 · Phoenix, AZ 85027
Ph: 623.580.9600 · Fx: 623.580.9659
www.gwresources.com

HASSAYAMPA NORTHEAST CAMPUS 1 WATER RECLAMATION FACILITY

McBride Engineering Solutions, Inc.
6100 West Gila Springs Pl., Suite 7
Chandler, AZ. 85226
Phone: (480) 759-9608

ELECTRICAL REQUIREMENTS

SINGLE LINE DIAGRAM AND LOAD PARAMETERS

DESIGNED: MJA/OMK
DRAWN: MGK/KPB CHECKED: BPM
DATE: 05-30-08
DWG. NO. E3
SHEET 50 OF 61

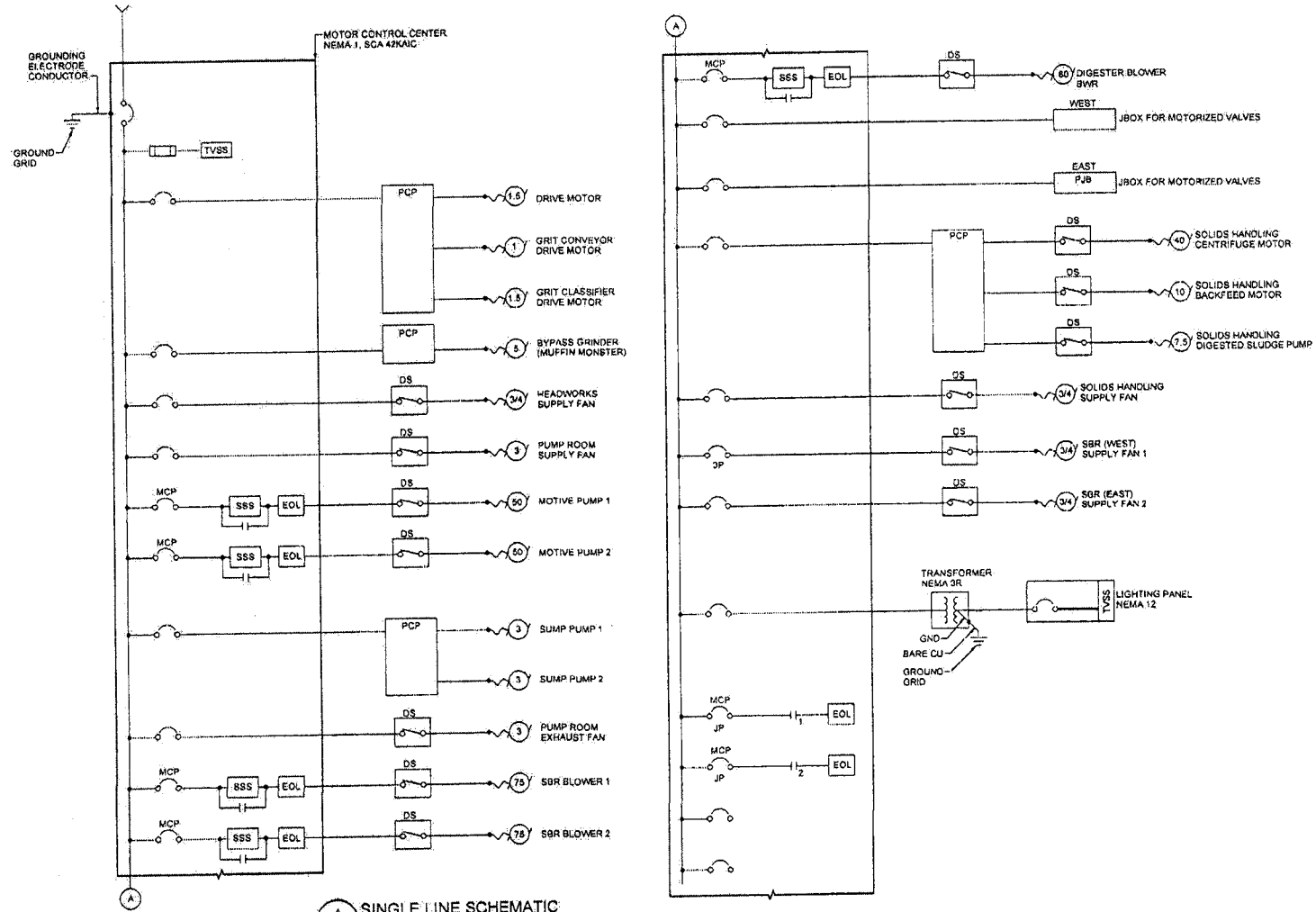

A SINGLE LINE SCHEMATIC

NOTES:

1. ALL SHORT CIRCUIT INTERRUPTING AND PROTECTING DEVICES SHALL HAVE A SHORT CIRCUIT INTERRUPTING RATING EQUAL TO OR GREATER THAN THE AVAILABLE SHORT CIRCUIT ON THE BUS.
2. FUSES SHALL BE SIZED PER THE EQUIPMENT MANUFACTURER'S RECOMMENDATIONS.
3. CONTRACTOR TO PROVIDE DETAILED CIRCUIT SCHEDULE BY A REGISTERED ELECTRICAL ENGINEER PRIOR TO CONSTRUCTION.

Registered Professional Engineer (Civil)
CERTIFICATE NO. 33441
BRIAN P. McBRIDE
Date Signed 6-2-08
ARIZONA U.S.A.
Expires 03/31/11

NO.	DATE	BY	REVISION DESCRIPTION

GLOBAL WATER INC.
RELIABLE · RENEWABLE · REUSABLE
21410 N. 19th Ave · Ste. 201 · Phoenix, AZ 85027
Ph: 623.580.9600 · Fax 623.580.9609
www.gwresources.com

HASSAYAMPA NORTHEAST CAMPUS 1 WATER RECLAMATION FACILITY

MES
McBride Engineering Solutions, Inc.
6100 West Gila Springs Pl., Suite 7
Chandler, AZ. 85226
Phone: (480) 759-9608

ELECTRICAL REQUIREMENTS

SINGLE LINE SCHEMATIC

DESIGNED: MJA/DMK
DRAWN: MQ/KPB | CHECKED: BPM
DATE: 05-30-08
DWG. NO. E4
SHEET 60 OF 61

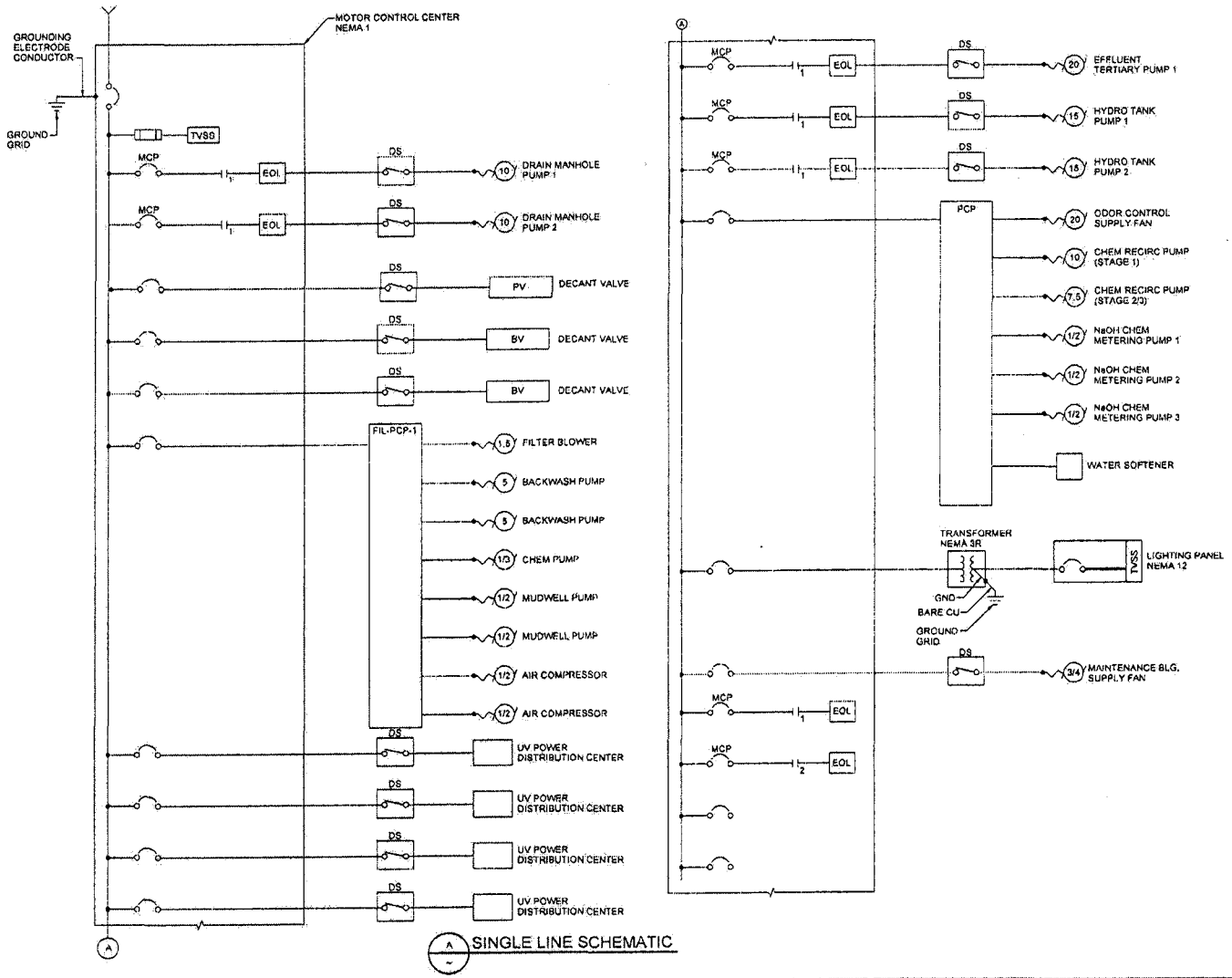

A SINGLE LINE SCHEMATIC

NOTES:

1. ALL SHORT CIRCUIT INTERRUPTING AND PROTECTING DEVICES SHALL HAVE A SHORT CIRCUIT INTERRUPTING RATING EQUAL TO OR GREATER THAN THE AVAILABLE SHORT CIRCUIT ON THE BUS.
2. FUSES SHALL BE SIZED PER THE EQUIPMENT MANUFACTURER'S RECOMMENDATIONS.
3. CONTRACTOR TO PROVIDE DETAILED CIRCUIT SCHEDULE BY A REGISTERED ELECTRICAL ENGINEER PRIOR TO CONSTRUCTION.

Registered Professional Engineer (Civil)
CERTIFICATE NO. 33441
BRIAN P. McBRIDE
Date Signed 6-2-08
ARIZONA U.S.A.
Expires 03/31/11

NO.	DATE	BY	REVISION DESCRIPTION

GLOBAL WATER
RELIABLE • RENEWABLE • REUSABLE
21410 N. 19th Ave. • Ste. 201 • Phoenix, AZ 85027
PH: 623.580.9600 • Fx: 623.580.0089
www.gwresources.com

HASSAYAMPA NORTHEAST CAMPUS 1 WATER RECLAMATION FACILITY

McBride Engineering Solutions, Inc.
6100 West Gila Springs Pl., Suite 7
Chandler, AZ. 85226
Phone: (480) 759-9608

ELECTRICAL REQUIREMENTS

SINGLE LINE SCHEMATIC

DESIGNED: MJA/DMK
DRAWN: MG/KPB CHECKED: BPM
DATE: 05-30-08
DWG. NO. E5
SHEET 61 OF 61

7

GLOBAL WATER
RELIABLE · RENEWABLE · REUSABLE

Hassayampa Utility Company, Inc.

Hassayampa Ranch
Water Reclamation Facility

Design Report

Revision 1

July 7, 2008

McBride Engineering Solutions, Inc.
6100 W. Gila Springs Place, Suite 7, Chandler, AZ 85226
Phone: (480) 759-9608 Fax: (480) 706-1106

Hassayampa Utility Company, Inc
Hassayampa Ranch WRF

Design Report

TABLE OF CONTENTS

Page

1.0 INTRODUCTION 1-1

2.0 WASTEWATER TREATMENT CRITERIA 2-1
2.1 INFLUENT CHARACTERISTICS 2-1
2.1.1 Influent Flow Quantity 2-1
2.1.2 Flow Peaking Factors 2-1
2.1.3 Influent Wastewater Quality 2-2
2.1.4 Industrial Wastewater 2-3
2.2 TREATED WATER QUALITY CRITERIA 2-3
2.3 BIOSOLIDS 2-5

3.0 TREATMENT PROCESS DESCRIPTION 3-1

4.0 TREATMENT UNIT PROCESSES 4-1
4.1 INFLUENT PUMP STATION 4-1
4.2 PRIMARY TREATMENT 4-1
4.2.1 Screenings/Grit Removal Equipment 4-2
4.2.2 Screenings/Grit Removal Bypass Grinder 4-2
4.3 SECONDARY TREATMENT 4-2
4.3.1 Sequencing Batch Reactors 4-3
4.3.2 Post-Equalization 4-5
4.4 TERTIARY TREATMENT 4-6
4.4.1 Sand Filtration 4-6
4.4.2 UV Disinfection System 4-7
4.5 AEROBIC DIGESTION 4-8
4.6 BIOSOLIDS DEWATERING 4-9
4.7 TERTIARY PUMP STATION 4-10
4.8 DRAIN MANHOLE PUMP STATION 4-11
4.9 ODOR CONTROL 4-11
4.10 STANDBY CHEMICAL ADDITION FACILITY 4-12
4.11 STANDBY POWER 4-12

5.0 PERMITTING 5-1
5.1 AQUIFER PROTECTION PERMIT (APP) 5-1
5.2 RECLAIMED WATER (REUSE) PERMIT 5-2

5.3 AZPDES PERMIT 5-2
5.4 UNDERGROUND STORAGE FACILITY (USF) PERMIT 5-3
5.5 WATER STORAGE PERMIT 5-3
5.6 APPROVAL TO CONSTRUCT/APPROVAL OF CONSTRUCTION 5-4
5.7 SPECIAL USE PERMIT 5-4

1.0 INTRODUCTION

The Hassayampa Utility Company, Inc. (HUC) Hassayampa Ranch Water Recycling Factory (HR WRF) will be located on the north side of Indian School Road, east of 339th Avenue in Maricopa County. The facility will be in the southeastern quarter of Section 22, Township 2 North and Range 5 West of the Gila and Salt River Base and Meridian. The Hassayampa Ranch service area includes approximately 2,050 acres of land, predominantly north of Indian School Road and East of 343rd Avenue.

The HUC HR WRF is planned to be constructed in three phases beginning with 0.5 million gallons per day (MGD), expanding to 1 MGD in Phase II and 3 MGD in Phase III. The size of the WRF will allow for a build out capacity of up to 10 MGD, while maintaining 350 foot setbacks, but only three phases are planned at this time.

The HUC HR WRF will be designed, constructed and operated so as to ensure the greatest degree of discharge reduction achievable. This facility will employ advanced wastewater treatment technology that includes nitrification and denitrification to produce Class A+ reclaimed water that can be directly reused for irrigation, or recharged. Discharge to the local surface water body will only take place when the volume of recycled water produced exceeds the reuse demand and the recharge capacity.

The recommended wastewater treatment processes to be employed at the HUC HR WRF will include the following:

- Influent Pump Station
- Primary Treatment
  - Screenings/Grit Removal Equipment
  - Screenings/Grit Removal Bypass Grinder
- Secondary Treatment
  - Sequencing Batch Reactors
  - Post-Equalization
- Tertiary Treatment
  - Sand Filtration
  - UV Disinfection System
- Aerobic Digestion
- Biosolids Dewatering
- Tertiary Pump Station
- Odor Control
- Chemical Addition Facility

2.0 WASTEWATER TREATMENT CRITERIA

The first step in the design of the HUC HR WRF is to determine the quantity and quality of the influent flow to be treated and the standards that the reclaimed water must meet. These factors determined the type, sizing, and characteristics of the unit process required for the facility. The wastewater treatment criteria developed as the basis for the design of the HUC HR WRF include influent wastewater quantity and quality, required treated water quality, and biosolids quality.

2.1 Influent Characteristics

The characteristics of the influent wastewater include average flow quantity, flow peaking factors and flow quality. All the influent characteristics have been based on published and accepted ranges for Phoenix, Arizona, empirical data, and MES experience.

2.1.1 Influent Flow Quantity

The HUC HR WRF is planned to be constructed in three phases to service the residential and commercial developments within the service area. Wastewater generated has been estimated based on the number of homes expected to be completed in a specific time frame, 2.5 people per dwelling, and a wastewater generation rate of approximately 140 gpcd. The equivalent wastewater generation rate per dwelling unit is approximately 350 gpd, per Maricopa County recommendation, as presented in Table 2-1 below.

Table 2-1 Wastewater Phasing Schedule

Phase	Year Completed	No. of Dwelling Units	Total Estimated Population	Treatment Capacity (MGD)
I	2009	1,425	3,560	0.5
II	2012	2,850	7,140	1.0
III	2017	8,570	21,425	3.0

The Hassayampa Ranch Service Area presented in the 208 Plan Amendment includes a large enough land area that, if fully developed into residential projects, could result in a build out flow of approximately 10 MGD. At this time, the HR WRF is being planned as a 3 MGD facility.

2.1.2 Flow Peaking Factors

The HUC HR WRF is designed with the following peaking factors listed in Table 2-2:

Table 2-2 Design Peaking Factors

Phase	Treatment Capacity (MGD)	Peak Hour Factor	Max Day Factor
I	0.5	3.0	2.0
II	1.0	2.5	2.0
III	3.0	2.0	2.0

The peak hour factor will be used in the sizing of preliminary treatment equipment and sequencing batch reactor equipment and basins. The max day factor will be used in the sizing of all equipment downstream of the post-equalization tank, including the filters and the ultraviolet disinfection.

2.1.3 Influent Wastewater Quality

The wastewater characteristics assumed for the HUC HR WRF design are presented in Table 2-2. These parameters are significantly higher than the typical values that have been previously approved by the environmental regulatory agencies. Data collected from Global Water's existing Palo Verde Utilities Company Campus 1 WRF and other existing wastewater plants serving newer developments in Arizona have been showing an increasing strength of wastewater in the last few years. Examples of recent BOD strengths include the PVUC Campus 1 WRF (300 mg/l), Cottonwood WWTP (363 mg/l), Anthem WWTP (300 mg/l), and Verrado WRF (280 mg/l). Based on this data we believe that it is prudent to raise the expected wastewater strength to levels that are in line with recent data for other new developments within Arizona. It is also recommended that once the first phase of the facility is operating the historical wastewater strengths should be tested and analyzed prior to the design of the Phase 2 expansion to verify the wastewater strength assumptions. A summary of the wastewater strengths and assumptions for this design are presented in Table 2-3.

Table 2-3 Influent Wastewater Concentrations

Contaminant	Unit	Typical Concentrations			HUC Hassayampa Ranch WRF Concentration
		Weak	Medium	Strong	
BOD_5	mg/L	110	220	400	300
TSS	mg/L	100	220	350	300
Total Nitrogen	mg/L	20	40	85	45
pH	-	6	7.5	9	6.5 - 9.0

2.1.4 Industrial Wastewater

The HUC HR WRF is not expected to receive flows that contain industrial, hazardous or mining wastewater, pesticides, PCBs, or radionuclides. The service area will include residential property and light commercial developments. HUC requires permits for all connections to the WRF. The permit review process allows a decision to be made on whether pretreatment is required before discharge to the WRF collection system. The HUC HR WRF will conduct periodic monitoring to detect industrial discharge.

2.2 Treated Water Quality Criteria

The HUC HR WRF has been designed to meet Arizona Title 18 requirements for Class A+ reclaimed water so that all water produced by the facility is available for direct reuse and recharge. Per Title 18 (R18-11-303(A)), the wastewater will undergo secondary treatment, filtration, nitrogen removal treatment, and disinfection. Table 2-4 summarizes the Class A+ water quality requirements and the design treatment criteria.

Table 2-4 Summary of Class A+ Water Quality Requirements and Design Criteria

Water Quality Parameter	Influent Concentration	Title 18 Requirements Class A+	Design Criteria
BOD_5 (mg/L)	300	NA	< 10
TSS (mg/L)	300	NA	< 10
Total Nitrogen (mg/L)	45	< 10	< 8
pH	NA	6.5 – 9.0	6.5 – 9.0
Fecal Coliform (#/100mL)	NA	None Detected	None Detected
Single Sample Maximum Fecal Coliform (#/100mL)	NA	23	<20
24-Hour Average Turbidity (NTU)[1]	NA	< 2	< 2
Maximum Turbidity (NTU)[1]	NA	5	< 5

[1]Chemical addition facilities will be available to provide coagulant addition if the 24-hour turbidity criteria are not met

2.3 Biosolids

The HUC HR WRF will generate a waste sludge that will be hauled offsite for either disposal in a permitted landfill or beneficial land application. For disposal in a permitted landfill, the sludge must not contain any free liquid as defined by Method 9095 – Paint Filter Liquids Test. The test is described in *Test Methods for Evaluating Solid Wastes, Physical/ Chemical Methods* (EPA Publication No. SW–846). In order to pass the Paint Filter Liquids Test, sludge must have a dry solids content of approximately 17-20 percent with no free water. For land application, the sludge must meet the "Class B" requirements, as described below.

The U.S. EPA 40 CFR 503 regulations, specifically 503.32(a) and (b), require biosolids intended for agricultural use to meet certain pathogen and vector attraction reduction conditions. The intent of the Class B requirements is to ensure that pathogens have been reduced to levels that are unlikely to pose a threat to public health and the environment under the specific use conditions. For Class B material that is land applied, site restrictions are imposed to minimize the potential for human and animal contact with the biosolids for a period of time following land application until environmental factors have further reduced pathogens. (No site restrictions are required with Class A biosolids.) Class B biosolids cannot be sold or given away in bags or other containers. The criteria for meeting Class B include testing to show that the biosolids have less than 2,000,000 colony-forming units per gram dry weight of total solids, or that the facility produces the biosolids through one of the following processes:

- Aerobic Digestion
- Air Drying
- Composting
- Lime Stabilization
- Equivalent Process to Significantly Reduce Pathogens (EPA-defined)

The HUC HR WRF will be designed with a full-capacity aerobic digestion process and mechanical dewatering equipment to meet the criteria for Class B biosolids.

3.0 TREATMENT PROCESS DESCRIPTION

The Hassayampa Utility Company Hassayampa Ranch Water Recycling Factory (HUC HR WRF) will be constructed to meet ADEQ BADCT guidelines. The ultimate treatment facility will be a 3-MGD sequencing batch reactor (SBR), activated sludge wastewater treatment facility that includes nitrification and denitrification, and tertiary treatment using filtration and UV disinfection. The facility will be constructed in phases. Phase I consists of a 0.5 mgd plant which will then be expanded to 1 mgd in Phase II and then to 3 mgd in Phase III. The 3-mgd module will consist of two sequencing batch reactors, a post-equalization basin, an aerobic sludge digester, tertiary filtration, UV disinfection, and mechanical solids dewatering.

Wastewater flow will be received at the influent lift station located on the treatment plant site. The influent lift station is part of the collection system and is therefore not a part of this design. A General Permit Type 4.01 will be obtained for this lift station and it will be fully enclosed and odor controlled.

Flow will be pumped from the Influent Lift Station to the Headworks where it will be passed through a screening and grit removal combination unit. The unit will use a perforated screen to remove trash and rags followed by a grit chamber, where the grit will be allowed to settle and then removed. Flow from the combination unit into the SBRs will be controlled using motor-operated inlet valves. The treatment plant will have alarms that will be connected to an automatic dialer system for failure protection. The standby generator will be sized to run the critical wastewater treatment plant units and the pump stations in the event of a power failure.

The wastewater treatment plant will be designed to meet a recycled water requirement of 10 mg/L for BOD_5 and TSS and < 8 mg/L for total nitrogen. The total detention time in the SBRs for treatment will be approximately 19 hours at average design flow utilizing one basin. A total retention time of over 37 hours will be available if both basins are utilized. All tanks will be constructed with reinforced concrete and leak tested prior to being placed into operation. Denitrification will take place under mixed anoxic conditions in the reactor after nitrification is accomplished under aerobic conditions. Anoxic conditions will be created by operating mixers without aeration. Settling will occur in the reactor prior to effluent being decanted into a post-equalization basin. Sludge will be wasted to an aerobic digester for further treatment.

Each SBR will operate 4 alternating and overlapping cycles per day (6.0 hours per cycle) followed by decanting and sludge draw:

- Anoxic Fill — Introduction of Raw Influent without Mixing or Aeration
- Aerated Fill — Mixing Only with the Introduction of Raw Influent
- Denitrification — Aeration and Mixing with the Introduction of Raw Influent
- React — Aeration and Mixing without the Introduction of Influent
- Settle — Typical Quiescent Time 45 – 60 Minutes
- Decant — Typical Decant Time < 120 Minutes
- Sludge Draw — Typical Sludge Wasting Time < 30 Minutes
- Idle — Time Varies Depending on Settle, Decant and Sludge Draw Times

The SBRs will be operated at a water depth of just under 12 feet at the start of a cycle. The maximum water depth at the end of a cycle will be 18.0 ft at average design flow for Phase I. Jet-aeration manifolds will be used for mixing and aeration in the SBRs. Dissolved oxygen levels will be controlled using D.O. sensors which will control the operation of the blowers.

Each SBR includes a solids excluding floating decanter with an automatic control valve. Supernatant will flow by gravity through the decanter to the post-equalization basin. The maximum water depth in the post-equalization basin will be just under 10 feet which will be 2 feet below the minimum water depth in the SBR to allow for the decant valve to remain fully open. Post-equalization will be used to equalize flow from the SBRs and create more uniform loading to the filters and the UV system.

Following secondary treatment, the secondary effluent will be pumped from the post-equalization basin to the tertiary filters. The automatic backwash sand filters will be sized for a maximum daily peak flow rate equal to twice the average design flow of the facility. The filters will include automatic backwash cycling with a total backwash volume equal to approximately 0.75% of the daily filtered flow rate.

The filtered effluent will flow by gravity to the UV disinfection system, which will consist of a series of UV banks installed in an open channel configuration. The UV lamps will be designed for twice the average design flow with one module on stand-by. The bulbs will be low-pressure, high intensity with variable UV output that is determined from the filtered effluent turbidity. The UV system also includes an automatic cleaning mechanism that will continuously reduce the bulb fouling and extend bulb life to 8,000 hours. Spare bulbs and sleeves will be kept on site to expedite repairs. In the event that the UV system is offline or fails catastrophically, liquid sodium hypochlorite will be added to ensure proper disinfection. Sodium bisulfite will be available for dechlorination prior to recharge or surface water discharge.

Following UV disinfection, the reclaimed water will flow by gravity to the tertiary pump station. Recycled water will be pumped to irrigation sites for direct reuse as a Class A+ reclaimed water. During winter months when reuse of all reclaimed water is not possible, it will be recharged or discharged to the Hassayampa River under an AZPDES permit.

Sludge will be stabilized to Class B level in the aerobic digester, which is designed for a hydraulic detention time of 24 days, and decanted to approximately a 2% solids concentration. Liquid sludge will be thickened to approximately 20% solids with a centrifuge and trucked to an approved landfill, or to permitted agricultural fields for land application.

4.0 TREATMENT UNIT PROCESSES

Based on the original criteria for the facility provided by Global Water – Hassayampa Utility Company, the wastewater treatment processes to be employed at the Hassayampa Ranch WRF will include the following:

- Influent Pump Station
- Primary Treatment
  - Screenings/Grit Removal Equipment
  - Screenings/Grit Removal Bypass Grinder
- Secondary Treatment
  - Sequencing Batch Reactors
  - Post-Equalization
- Tertiary Treatment
  - Sand Filtration
  - UV Disinfection System
- Aerobic Digestion
- Biosolids Dewatering
- Tertiary Pump Station
- Odor Control
- Standby Chemical Addition Facility

4.1 Influent Pump Station

In Phase I, the Influent Pump Station will be constructed as a large diameter pre-cast manhole. As Phase II and Phase III are implemented, a wet well will be constructed to accommodate the additional pumps. The influent lift station will be part of the collection system and is therefore not a part of this design. A General Permit Type 4.01 will be obtained for this lift station.

4.2 Primary Treatment

Primary treatment will consist of a combination screening/grit removal unit which works by separating the solids from the flow in a screening zone. The screened, degritted liquid will flow over a weir to the SBR's while the dewatered solids and grit will be discharged through chutes for disposal. The preliminary treatment equipment will be fully enclosed to minimize odors and will be installed within the headworks building. The entire headworks building will be odor controlled.

The preliminary treatment for Phase I will have the following components:

- Influent Combination Unit for Screenings and Grit Removal
- Bypass Grinder Unit
- Disposal Container

4.2.1 Screenings/Grit Removal Equipment

Wastewater from the influent pump station will be pumped to the combination unit where the screenings and grit will be removed. The combination unit will have the capacity to treat the peak flow for both Phases I and II. An emergency bypass line with an inline grinder will be installed in case of a failure of the combination unit. A second combination unit will need to be added for the third phase.

Screenings will be collected and disposed of through a chute to a dumpster. To minimize the volume of screenings produced, the combination unit will dewater the screenings through compression in a dewatering zone and dispose of them in the disposal container. Water removed by the washing/dewatering process will be returned to the head of the plant through a drain line which returns the flow to the influent pump station by way of the drain manhole pump station. The conceptual design parameters for the preliminary treatment system are presented in Table 4-1.

Table 4-1 Preliminary Treatment System Parameters

Parameter	Design Values (Phase I)
Number of Units	1
Screen Opening Type	Perforated Plate
Screen Opening Size (mm)	6.0
Hydraulic Capacity, each (mgd)	3.5
Firm Hydraulic Capacity (mgd)	3.5
Number of Disposal Containers	1
Estimated Screening Volume (CF/day)	6

4.2.2 Screenings/Grit Removal Bypass Grinder

An in-line grinder will be utilized in the event that a bypass of the combination unit occurs due to a failure or blockage of the unit that trips the high alarm. The grinder bypass line will feed the influent to the SBR basins under this emergency condition.

4.3 Secondary Treatment

Secondary treatment will consist of two sequencing batch reactor (SBR) basins and a post-equalization basin. Two cast-in-place SBR structures and one post-equalization basin are planned for the first phase of this facility. The secondary treatment process will be split into two parallel trains of equal capacity. Two basins will allow for the operational flexibility of taking one basin out of service for a short period of time for maintenance, as needed. The bioreactors will be covered and odor controlled.

4.3.1 Sequencing Batch Reactors

The two SBR basins will be operated in staggered cycles that are approximately 6 hours in duration, with each cycle consisting of 5 different phases to achieve maximum yield. The first phase will be an Anoxic Fill, during which the basin will be loaded with wastewater without aeration, and the soluble BOD will be absorbed and stored by the facultative biomass until air is received to metabolize the food.

The second phase, Aerated Fill, will be initiated once approximately 75% of the fill period is completed. The blowers and pumps will be started and provide air and complete mixing to initiate the "feasting" period of the biomass. During this phase, the biomass will begin to metabolize the food it has absorbed and nitrification and denitrification will start to occur. The ammonia in the wastewater will then be converted to nitrates within the aerated plume of the basin. The nitrates will then be converted to nitrogen gas within the low dissolved oxygen areas of the basin. The denitrifying organisms will use the BOD as a food source along with the oxygen by-product from the nitrate conversion.

The third phase, Denitrification, allows for additional denitrification time. During this phase, the blowers will be turned off and the mixing pump will continue to mix, providing anoxic mixing to drive denitrification.

The fourth phase, React, will occur after the basin has completed filling, and the influent flow will be diverted to the other SBR basin. Since the influent flow will be diverted, no more food for the biomass will enter the basin forcing the organisms to scour for any remaining BOD. Aeration will continue in the full reactor until complete biodegradation is achieved; mixed liquor will then be drawn into and recycled within the motive pumps through the jet aerator. The React phase will continue until the food is consumed and the biomass starts entering a "famine" state. A True React occurs where there is no influent or primary effluent within the reactor and is essential in achieving intense famine conditions for optimum organism selection. Self cleaning D.O. probes will monitor the D.O. levels and signal the blowers and pumps accordingly.

The reactor will then enter the fifth phase, Settle, where the biomass will be allowed to settle in perfect quiescent conditions; no influent will be introduced and no secondary effluent will be decanted. Since the reactor will be under true quiescent conditions during settle, 100% of the reactor capacity will be available for separation. Once the Settle phase is completed, the secondary effluent will be decanted and sent to the post-equalization basin for further processing. The decant phase will continue until approximately the upper 1/3 of the basin is discharged.

The conceptual design parameters for the bioreactor, as calculated by the manufacturer, are summarized in Table 4-2. The manufacturer's complete calculations are provided in **Appendix A**.

Table 4-2 Bioreactor Design Parameters

Parameter	Value (Phase I)
Reactor and Process Char.	
Design MLSS (mg/L)	3,000
Hydr. Retention Time (days)	1.58
Aerobic Sludge Age (days)	8.5
System SRT (days)	17.0
Biosolids Yield Factor (per d)	0.54gVSS/gBOD
Oxic F:M (gCOD/gMLSS/d)	0.25
Syst. F:M (gCOD/gMLSS/d)	0.13
Process Parameters	
Avg. COD removed (lb/d)	2,189
Max. COD removed (lb/d)	3,440
Min. SRT – peak load (days)	7.3
Avg. biosolids yield (lb/d)	547
Avg. net sludge yield (lb/d)	1,039 (COD)
Max. sludge yield (lb/d)	1,352 (COD)
Req. aerobic mass (lb MLSS)	9,853
Req. aerobic volume (MG)	0.39
Aerated portion of cycle (%)	50.0
Req. total SBR volume (MG)	0.79
SBR Basin Design	
# of basins	2
Length (ft)	65
Width (ft)	45
TWL @ avg. flow (ft)	18.0
Total SBR volume (MG)	0.79
Total SBR retention time (hr)	37.8
Standard O_2 Req. (lbO_2/d)	3,285
Process Design	
No. batches/day/SBR	4.0
Max. Fill Time (hr)	3.0
Complete Cycle Time (hr)	6.0
Design Air Flow (SCFM)	579
Total Number of Blowers	2 (incl. spare)
Air Flow per blower (SCFM)	579
Total Number of Pumps	2
Total Pump Head (ft)	21
Flow per Pump (gpm)	2,746
Required Jet Head (ft)	17
Total Pump BHp/basin	19.2
Volume per Decant (gal)	62,500
Average Decant Flow (gpm)	2,083

4.3.2 Post-Equalization

A post-equalization basin will be constructed as part of this design. The basin will reduce flow variations to the downstream filtering and disinfection processes, thereby increasing the effectiveness of the processes and reducing the cost of the equipment required. Post-equalization will also ensure that there are not large variations in flow for the metering pumps and chlorine analyzers. The equalization process for Phase 1 is required to accommodate at least 70,000 gallons of flow storage volume. The designed basin will have a capacity of approximately 2 decant cycles. The basin will be a self-cleaning non-aerated type, with a bottom sloped towards a sump located in the corner of the basin.

Due to plant hydraulics, the post-equalization basin will also contain two submersible pumps that will pump secondary effluent to the filters. The pumps will be added during the first phase and will serve as duty and redundant units. Phase 1 Equalization Basin design parameters are summarized in Table 4-3.

Table 4-3 Post-Equalization Basin Design Parameters

Parameter	Design Values
Length (ft)	65
Width (ft)	25
Maximum Water Level (ft)	9.9
Minimum Water Level (ft)	3
Maximum Capacity (MG)	0.2
Decant Volume (MG)	0.0625
Pump Type	Submersible
Number of Pumps	2 (1 Duty/1 Standby)
Pump Capacity, each (mgd)	1
Pump Capacity, each (gpm)	695

4.4 Tertiary Treatment

Tertiary filtration follows the secondary treatment process and is required in the production of Class A+ reclaimed water. Filtration lowers the turbidity of the treated wastewater and removes solids prior to disinfection. Conventional tertiary filters, automatic backwash filters, generally include one or more layers of sand or anthracite media, and use water backwash or air scour for media cleansing.

Disinfection of the wastewater is required for the production of Class A+ reclaimed water. Currently the two most common means of disinfection for tertiary treated wastewater are chlorine disinfection followed by de-chlorination, and ultra-violet light (UV) disinfection. However, chlorination requires the use of a contact chamber that has a relatively large footprint. In addition, the use of chlorine in the quantities required for disinfection would not be consistent with the goals of the design to minimize the use of all chemicals, and the use of a chlorination/de-chlorination system as a primary disinfection choice also increases the future regulatory risk in regard to disinfection by-products. Therefore, this facility will utilize a UV disinfection system with sodium hypochlorite available in the event a failure of the UV equipment occurs.

4.4.1 Sand Filtration

The secondary effluent will be pumped from the post-equalization basin to the inlet channel of the pulsed-bed (rapid flow gravity) tertiary filters. A chemical injection point will be provided prior to the flow entering the filters to allow for coagulant addition to aid the filter process. The flow will enter the filter cells through proportioning weirs and cascade into the influent distribution trough and onto the filter cell sand through v-notch weirs. The flow will then be distributed evenly across the sand through the use of splash plates. As the flow reaches the surface of the filter media, the larger particles within the secondary effluent will be retained on the media surface. The finer particles enter the spaces between the sand and grains, or the interstices, and will be trapped. Over time, large particles will cover the filter media surface, thereby increasing the headloss and causing the water level to rise over the media surface.

A diffuser will be part of the pulsed-bed filter design and will use low pressure diffused air bubbles to create a gently rolling motion in the liquid over the filter surface, thereby lifting floc particles from the media surface and suspending them in the liquid. The bed will also have the ability to "pulse", or automatically regenerate the filter surface without initiating a backwash cycle. This will be achieved by closing the filtrate outlet valve, trapping atmospheric air in the underdrain. The backwash inlet valve will then be opened and the backwash pump will flood the underdrain cavity with filtered water, pushing the trapped air up through the media to the surface. This process will last about 20 seconds and dislodge particles trapped on the media surface and entrain them in the liquid above the filter surface.

An additional backwash cycle will be used for more thorough media regeneration. Once maximum headloss is achieved, the 3.5 minute backwash cycle will be initiated and stored filtrate will be pumped up through the filter media, pushing a pulse of air up through the bed. The unfiltered water will be directed out through the backwash troughs along each filter cell. The unfiltered water is then piped from the backwash troughs to the mudwell, and is then pumped to the drain manhole, and back to the head of the facility. Once the backwash cycle is completed,

the regular filtration cycle will be resumed. Because the filters will be located downstream of the post-equalization basin, they are sized for a max-day peak of twice the average daily flow instead of the larger peak-hour flow.

Table 4-4 summarizes the design values for the tertiary filtration system. Manufacturer information on the pulsed-bed filters is included in **Appendix B**.

Table 4-4 Tertiary Filtration System Design Parameters

Parameter	Design Values
Type	Pulsed-Bed Sand
Type of Media	Sand
Depth of Media (in)	10
Number of Filter Cells	3
Filter Cell Length (ft)	16
Filter Cell Width (ft)	4.5
Filter Area per Cell (sf)	72
Total Filter Area (sf)	216
Average Filtration Rate (gpm/sf)	3.2
Firm Filtration Rate (gpm/sf)	4.8
Firm Flow Capacity (mgd)	1.0
Maximum Flow Capacity (mgd)	1.5
Coagulant Addition	Yes, prior to inlet channel

4.4.2 UV Disinfection System

A UV disinfection system is recommended for the HUC HR WRF. The UV system for Phase I will consist of one channel containing 4 banks of ultraviolet bulbs. Each UV bank will include a fully automated cleaning system that eliminates the need for manual sleeve cleaning. The UV system power panels will be housed in weatherproof enclosures located near the reactor units. Because the UV disinfection units will be located downstream of the post-equalization basin, they are sized for a max-day peak of twice the average daily flow. The proposed design criteria for the UV disinfection system are summarized in Table 4-5.

Table 4-5 UV Disinfection System Design Parameters

Parameter	Value (Phase I)
Influent Turbidity (NTU)	≤ 2
Effluent Fecal Coliform (cfu/100 mL)	Non-Detectable
Log Removal	>3
No. of Units	4
Flow Capacity per Unit (mgd)	0.35
Firm Flow Capacity (mgd)	1.0
Configuration Type	Parallel
Design Transmissivity (UV Transmittance %)	70

4.5 Aerobic Digestion

Aerobic Digestion will be provided to stabilize the waste activated solids (WAS). Bulletin No. 11 recommends a retention time of 16 to 18 days for stabilization and for purposes of this evaluation, a conservative estimate of 24 days retention of the Average Daily Maximum Month (ADMM) flow of solids production has been applied. The aerobic digester process equipment consists of aeration blowers, coarse air bubble diffuser grids, digested sludge pumps, and a mechanism for decanting. The supernatant will be decanted from the sludge digester and returned to the head of the plant via the drain manhole pump station. The design parameters for the digester are presented in Table 4-6.

Table 4-6 Aerobic Digester Design Parameters

Parameter	Value (Phase I)
Solids Retention Time (d)	24
Sludge Produced (based on TSS, lb/d)	873
Digester sludge concentration	2%
Digester sludge production (gpd)	5,300
No. of Digesters	1
Total Digester Volume (MG)	0.17
Percent VSS	75%
Standard Oxygen Required (lb/d)	878
Total Number of Blowers	2 (1 Duty/1 Standby)
Air Flow per Blower (SCFM)	700
Blower Discharge Pressure (psig)	9.33
BHp per Blower	41.1

4.6 Biosolids Dewatering

The HUC HR WRF will utilize a centrifuge for solids dewatering based on its ability to produce a dry cake that will pass a Paint Filter Test as required for landfill disposal. The centrifuge will be installed on a mezzanine within the solids handling, and this elevated location will facilitate removal of the cake. The dewatered sludge cake will drop down a chute into a disposal container below located near an overhead door to allow truck access and dewatered sludge cake removal.

The solids dewatering design parameters are presented in Table 4-7.

Table 4-7 Centrifuge Design Parameters

Parameter	Design Values
Type	Centrifuge
Number of Units	1
Internal Diameter (ft)	1.0
Feed Rate (gpm)	60
Sludge Feed Pump Type	Progressive Cavity
No. of Sludge Feed Pumps	2 (1 Duty/1 Standby)
Digester Sludge Production (lb/d)	873
Digester Sludge Production (gpd)	5,300
Maximum Runs per Week (days)	5
Daily Sludge Load at 5 days/week (gal)	5,300
Maximum Daily Run Time (hrs)	1.5

4.7 Tertiary Pump Station

The tertiary pump station will deliver reclaimed water to both the on-site non-potable water (NPW) system via a hydropneumatic tank and the off-site reclaimed water piping system. The tertiary pump station will be located downstream of the UV disinfection channel and will consist of a standard below-grade wetwell with three vertical turbine pumps connected through a distribution manifold. Butterfly valves will be installed between the pumps to allow one of the pumps to be used as a redundant unit for each system and to provide isolation of each pump for maintenance or replacement.

The design parameters for the Tertiary Pump Station are presented in Table 4-8.

Table 4-8 Tertiary Pump Station Design Parameters

Parameter	Design Values
Number of Pumps	3 (2 Duty/1 Standby)
Pump Type	Vertical Turbine
Pump Capacity, each (gpm)	500
Pump Capacity, firm (gpm)	1,000
Pump Capacity, firm (mgd)	1.4
Chamber Surface Area, each (ft x ft)	13 x 9
Assumed Wetwell Depth (ft)	7
Wetwell Volume (gal)	6,000

4.8 Drain Manhole Pump Station

A drain manhole pump station will be utilized at the HUC HR WRF to recycle waste flows back to the head of the facility. Throughout the treatment process, waste flows from the screening/grit combination unit, digester, filters, solids handling, and odor control will be piped to the drain manhole pump station. A force main from the drain manhole pump station returns these waste flows to the head of the facility. The drain manhole pump station will contain two submersible pumps, one for duty and one for standby. The drain manhole pump station design parameters are presented in Table 4-9.

Table 4-9 Drain Manhole Pump Station Design Parameters

Parameter	Design Values
Number of Pumps (total)	2
Pump Type	Submersible
Pump Capacity, each (gpm)	100
Pump Capacity, firm (gpm)	100
Chamber Surface Area, (ft^2)	28
Wetwell Depth (ft)	11
Wetwell Volume (gal)	2300

4.9 Odor Control

A wet scrubber system will be provided for the HUC HR WRF to provide odor control. The wet scrubber will utilize 3 stages to remove the offensive odors. In Stage 1, the process gas will be pretreated with blowdown from Stage 2/3 as well as sodium hydroxide (NaOH) to remove 70-80% of the hydrogen sulfide (H_2S). The air will then pass through Stages 2 and 3, where an oxidation reaction will occur using NaOH and sodium hypochlorite (NaOCl) and removes the remaining H_2S.

Table 4-10 outlines the design parameters for the wet scrubber, and Table 4-11 provides details on the process treatment units, type of enclosure and method of odor control.

Table 4-10 Wet Scrubber System Design Parameters

Parameter	Value (Phase 1)
Air Flow Rate (cfm)	13,800
Average Inlet H2S Concentration (ppm)	10
Peak Inlet H2S Concentration (ppm)	20
Minimum H_2S Removal	99% or 0.5 ppm, whichever is greater

Table 4-11 Odor Control Summary

Treatment Process Unit	Odor Control	Enclosure Type
Headworks	Wet Scrubber	CMU Building
Secondary Treatment – SBR Basins	Wet Scrubber	Concrete Basins w/Metal Covers
Aerobic Digester	Wet Scrubber	Concrete Basins w/Metal Covers
Tertiary Filters	None	N/A
UV Disinfection System	None	N/A
Tertiary Pump Station	None	N/A
Solids Handling Equipment	Wet Scrubber	CMU Building

4.10 Standby Chemical Addition Facility

Standby chemical addition facilities containing filter coagulant will be provided to ensure that recycled water turbidity levels are always within the permit limits of 2/5 NTU.

4.11 Standby Power

This facility will utilize a load-shedding plan which will allow essential process equipment to operate using an 800-kW stand-by generator for the 0.5 mgd flow.

5.0 PERMITTING

This purpose of this section is to identify the environmental permits that are likely to be required for the HUC NE Campus 1 WRF. For a wastewater facility of this size with full solids handling capabilities, an effluent reuse system, groundwater recharge facilities, and surface discharge, it is anticipated that the following environmental permits will be required prior to or concurrent with the design:

- Aquifer Protection Permit (APP) – ADEQ
- Reclaimed Water (Reuse) Permit – ADEQ
- Arizona Pollution Discharge Elimination System (AZPDES) Permit - ADEQ
- Underground Storage Facility (USF) Permit – ADWR
- Water Storage Permit (WSP) – ADWR
- *Approval to Construct Permit – MCESD*
- *Approval of Construction – MCESD*
- *Special Use Permit – MCPDD*

The last three of these, the construction permits from MCESD and the Special Use zoning permit from MCPDD (shown in italics), will be design-build team or engineering and hydrogeological consultants under a separate environmental permitting contract. The following paragraphs provide a breakdown describing the requirements for each permit.

5.1 Aquifer Protection Permit (APP)

According to the Arizona Department of Environmental Quality (ADEQ), you need to obtain an Aquifer Protection Permit, or APP, if you own or operate a facility that discharges a pollutant either directly to an aquifer or to the land surface or the vadose zone (the area between an aquifer and the land surface) in such a manner that there is a reasonable probability that the pollutant will reach an aquifer. A water reclamation facility, such as the one planned at HUC NE Campus 1, falls into this category.

According to ADEQ, the most critical three pieces of information that are needed for an APP Application include the following:

1. BADCT - The applicant must show that the best available demonstrated control technology (BADCT is pronounced 'BADCAT') will be used by the facility.
2. The applicant must show that aquifer water quality standards (AWQS) will not be violated in the aquifer at a point of compliance as a result of discharge from the facility. If the level of a pollutant in the aquifer already exceeds the AWQS at the time of permit issuance, the aquifer must not be further degraded.
3. The applicant must demonstrate financial and technical capability to complete the project.

The HUC NE Campus 1 WRF APP Permit application was first filed in October 2005. Review of the application by ADEQ was delayed by the ongoing 208 Amendment process which was completed in December 2007, and by

the ongoing Special Use Permit process which is due to be complete in July 2008. Substantive review of the HUC NE Campus 1 WRF APP application was started in June 2008 and an APP is expected to be issued by April 2009.

5.2 Reclaimed Water (Reuse) Permit

The reuse of the effluent from the wastewater plant for golf course irrigation or aquifer recharge will require an approved Type 2 Reclaimed Water Permit from ADEQ for direct reuse of Class A+ reclaimed water. To comply with this requirement, a Notice of Intent will be submitted to ADEQ. The permit application will require the following information:

- Applicant Information
  - General information
  - Name, address, and phone number of applicant contact and compliance contact,
- End User/Reuse Site Information:
  - Location of the reuse site(s) including county, Township, Range, Section, and Latitude and longitude of the approximate center point for the reuse site(s)
  - Description of the reuse activity, including type of vegetation being irrigated (turf, trees, shrubs, alfalfa, etc), and approximate acreage (if applicable).
  - A map showing the location of the reuse site(s).
  - A statement from the reclaimed water supplier acknowledging use of reclaimed water under this NOI.
  - A statement that permittee shall post signs as specified in R18-9-704
- Reclaimed Water Information
  - Facility information
  - Aquifer Protection Permit information

The reuse permit will be pursued at the end of the construction phase.

5.3 AZPDES Permit

On Dec. 5, 2002, Arizona became one of 45 states with authorization from EPA to operate the National Pollutant Discharge Elimination System (NPDES) Permit Program (Section 402 of the Clean Water Act) on the state level. Under the Arizona Pollutant Discharge Elimination System (AZPDES) Permit Program, all facilities that discharge pollutants from any point source into waters of the United States (navigable waters) are required to obtain or seek coverage under an AZPDES permit.

To permit discharge to the Hassayampa River, even on an emergency basis, the HUC NE Campus 1 WRF will be required to have an individual AZPDES permit. According to ADEQ, the permit application must contain, if applicable, the following information:

- Cover page - The name and location of the permittee, discharge locations, and a statement authorizing the discharge;
- Effluent limitations and other monitoring requirements - Based on technology-based and water quality standards, these are the primary mechanism for controlling discharges of pollutants to receiving waters and characterizing waste streams
- Monitoring and reporting requirements - Specifies sample collection and analysis and reporting results to evaluate wastewater treatment efficiency and determine compliance with permit conditions
- Biosolids - For the management of sludge at wastewater plants that treat domestic wastewater
- Special conditions - Additional requirements to supplement effluent limitations. Examples include mixing zones, best management practices, ambient monitoring programs, toxicity evaluations, and compliance schedules
- Standard conditions - Pre-established conditions that apply to all AZPDES permittees and outline the administrative, legal and procedural requirements of the program.

The HUC NE Campus 1 WRF AZPDES Permit application was first filed in 2006. Review of the application by ADEQ was delayed by the ongoing 208 Amendment process which was completed in December 2007. The HUC NE Campus 1 WRF AZPDES application was issued on June 20, 2008.

5.4 Underground Storage Facility (USF) Permit

The construction and use of the recharge facilities associated with the HUC NE Campus 1 WRF will require an approved Underground Storage Facility (USF) permit. A USF permit allows the permit holder to operate a facility that stores water in the aquifer. The criteria a USF must meet in order to be permitted include:

1. The project must be hydrologically feasible;
2. The applicant must have financial and technical capability;
3. The applicant has agreed in writing to obtain any required floodplain use permit from the county flood control district before beginning any construction activities;
4. The project may not cause unreasonable harm to land or other water users within the area of impact; and
5. The project will continue to be monitored to ensure storage does not cause the migration of poor quality water.

The HUC NE Campus 1 WRF USF Permit application will be pursued prior to the construction and operation of recharge facilities.

5.5 Water Storage Permit

A Water Storage (WS) Permit allows the permit holder to store water at a USF or GSF. In order to store water, the storer must provide to ADWR evidence of its legal right to the source water proposed for recharge. A contract for CAP water must be submitted to the Department prior to storing CAP water obtained pursuant to that contract, and water storage must occur at a permitted facility. The permit application will require the following information:

- Applicant Information

- Storage Facility Information
- Consent to Water Storage
- Type of Source Water
- Non-Recoverable Water
- Permit Duration
- Legal Right to Source Water
- Agreement to Comply with Groundwater Savings Facility Plan of Operation

The HUC NE Campus 1 WRF WSP application will be filed prior to the construction and operation of recharge facilities.

5.6 Approval to Construct/Approval of Construction

An Approval to Construct must be obtained from MCESD before any construction of the WRF can begin. The Approval to Construct process includes a review of all project documentation including the Design Report and Design Drawings. When the Approval to Construct is issues, construction of the WRF can begin. When construction is complete and a start-up plan is developed for the facility, the Approval of Construction process can be started. In order to obtain the Approval of Construction, MCESD must review and approve the start-up plan, inspect the facility, approve the validation and commissioning of the facility, and approve the O&M Manual. The final step in obtaining the Approval of Construction is the submittal of As-Built Drawings.

5.7 Special Use Permit

A Special Use Permit is required for all wastewater treatment facilities in Maricopa County. This is a zoning permit that allows for the construction and operation of industrial activity in an area that has not been previously zoned for industrial activity. The Special Use Permit process involves an extensive Citizen Participation Program that includes notifying adjacent property owners and stakeholders in the area. The review process also includes a Site Plan review, Narrative Report, Traffic Study, and Drainage Study. The HUC NE Campus 1 WRF Special Use Permit was approved by the Maricopa County Board of Supervisors on June 4, 2008. The Special Use Permit is expected to be issued by July 7, 2008.

APPENDIX A

SBR Manufacturer Design Calculations

SIEMENS

4/2/2008

Hassayampa Ranch WRF

OMNIFLO® SEQUENCING BATCH REACTOR

DESIGN CALCULATIONS

Rev. No. 0
Prep. By: KSG

SIEMENS FILE NO. JTP-08xxx

Two Tank SBR

I. DESIGN PARAMETERS:

Influent & Effluent Characteristics			English Units	Metric Units
Flow	=	0.50	MGD average	1,893 m^3/d
Peak Instantaneous	=	1.50	MGD *	5,678 m^3/d
COD to SBR	=	600	mg/l total*	
	=	432	mg/l soluble	
Effluent COD	<		mg/l *	
	=		***not required***	
COD removed	=	2,189	lbs./day	993 kgs/d
Peak sustained COD load	=	900	mg/l, for not more than	
		3	consecutive days	
BOD to SBR	=	300	mg/l	
	=	1,251	lbs./day	567 kg/d
Effluent BOD	<	10	mg/l	
	=	***10***	***mg/l required***	
BOD removed	=	1,230	lbs./day	558 kg/d
TSS to SBR	=	300	mg/l	
	=	1,251	lbs./day	567 kg/d
Inert TSS fraction	=	40	% *	
Effluent TSS	<	10	mg/l	
	=	***10***	***mg/l required***	
	=	21	lbs./day	9 kg/d

(*notes values assumed by Siemens, which must be verified or revised by client or his designated agent)

Influent dissolved solids, TD	=	500	mg/l*	
Influent NH4-N	=	30	mg/l*	
	=	125	lbs./day	57 kg/d
Influent TKN	=	45	mg/l*	
	=	188	lbs./day	85 kg/d
Effluent NH3-N	<	1.0	mg/l	
	=	***1.0***	***mg/l required***	
			Assumed standard uninhibited nitrification rate*	
Effluent Total Nitrogen	<	8	mg/l	
	=	***8***	***mg/l required***	
			Assumed standard uninhibited nitrification rate*	
Influent Phosphorus	=	9	mg/l	
	=	36	lbs./day	16 kg/d
Effluent Phosphorus	<	2.0	mg/l	
	=		***not required***	
Winter Temperature (min.)	=	12 °C	*	
Summer Temperature (max	=	25 °C	*	

Reactor & Process Characteristics

Design MLSS	=	3,000	mg/l @ TWL	
Hydr. Retention Time provid	=	1.58	days	37.8 hours
Aerobic Sludge Age (SRTox	=	8.5	days min. SRTox	
System SRT	=	17.0	days	
Biosolids yield factor	=	0.25	gVSS/gCODr/d	
	=	0.54	gVSS/gBODr/d	
Aerobic or Oxic F:M	=	0.25	gCOD/gMLSS/d	
	=	0.13	gBOD/gMLSS/d	
System F:M	=	0.06	gBOD/gMLSS/d	
Elevation	=	1,500	ft. MSL*	457 m
Average barometric pressur	=	13.91	psia*	96 kPa

II. PROCESS PARAMETERS:

Average COD removed	=	2,189	lbs./day	993 kg/d
Maximum COD removed	=	3,440	lbs./day	1,560 kg/d
Minimum SRTa - peak loadi	=	7.3	days	

(*notes values assumed by Siemens, which must be verified or revised by client or his designated agent)

Avg biosolids yield, dXv	=	547	lbs./day*	248 kg/d
Avg net sludge yield (bio+ine	=	1,039 1,156	lbs/d based on CODr* lbs/d based on BODr*	471 kg/d 524 kg/d
Maximum sludge yield	=	1,352	lbs/d based on CODr*	613 kg/d
Required aerobic mass	=	9,853	lbs MLSS	4,469 kgs
Required aerobic volume	=	0.39	MG	1,491 m^3
Aerated portion of cycle	=	50.0	%	
Required total SBR volume	=	0.79	MG	2,981 m^3

III. SBR BASIN DESIGN:

Number of SBR basins	=	2		

If Rectangular Basins are used :

Length/Width Ratio	=	1.4 : 1		
Length	=	65	ft.	19.81 m
Width	=	45	ft.	13.72 m

If Round Tanks are used :

Diameter	=	61	ft.	18.61 m
Maximum Water Level	=	18.0	ft.	5.49 m
Nominal Bottom Water Leve	=	15.1	ft.	4.62 m

***(The minimum hydraulic water level is typically well below nominal BWL)*

TWL at Design Average Flo	=	18.0	ft.	5.49 m
Total Volume in SBR's	=	0.79	MG	2,981 m^3
Total Retention Time in SBF	=	37.8 1.58	hrs. days	

(*notes values assumed by Siemens, which must be verified or revised by client or his designated agent)

IV. OXYGEN REQUIREMENT:

First Estimate :

lbs. O2/lb. BOD removed	=	1.31	kg O2/kg BOD removed	
lbs. O2/lb. TKNoxidized	=	4.6	kg O2/kg TKNoxidized	
lbs. O2/lb. NO_3x denitrified	=	-2.86	Denite efficiency =	60 %
Actual Oxygen Req'd, AOR	=	2,017	lbs. O2/day	915 kg/d

Second Estimate :

Check AOR estimate against mass balance :
(TKNox may be included in COD, assume not)

AOR = CODi - CODw - CODes + 4.6*TKNox - 2.86*NO3Ndn

where :

CODi = influent	=	2,502 lbs./day	1,135 kg/d
CODw = wasted	=	657 lbs./day	298 kg/d
CODes = eff solubl	=	313 lbs./day	142 kg/d
TKNox** = oxidized	=	140 lbs./day	63 kg/d
NO_3Ndn = denitrifiec	=	71 lbs./day	32 kg/d

The oxygen requirement determined by mass balance is:

AOR = 1,973 lbs./day 895 kg/d

Differences in AOR values calculated is due to assumptions for sludge yield, for effluent COD & BOD, and for oxidation of NH3-N in the COD analysis. Precise determination of AOR requires a detailed plant or pilot study. Use highest value in lieu of better data. Therefore :

DESIGN AOR = 2,017 lbs. O2/day 915 kg/d

Convert Process, or Actual Oxygen Requirement (AOR), to Standard Oxygen (SOR) :

Conversion Formula from ASCE Manual of Practice :

$$SOR = \frac{AOR * Cs}{a * (ßCsd - DO) * Ø^{(T-20)}}$$

Where:

Cs = DO saturation at Stnd Conditi
= 9.07*(1+0.4*D/34)
= 10.99 mg/l

Csd = DO saturation at design conditions
= Cst*(Fe+0.4*D/34)
where : Cst = DO saturation at liquid Temp & 1 sea level
= 8.24 mg/l

Elev. Factor, Fe = 0.94 Therefore, Csd = 9.53 mg/l

(*notes values assumed by Siemens, which must be verified or revised by client or his designated agent)

Alpha, a = 0.85 *		SWD, D = 18.0 ft	
D.O., mg/l = 2.0 mg/l		Beta, ß = 0.95 *	
Liquid Temp, T = 25 °C		Theta, Ø = 1.024	

Therefore:

Standard Oxygen Required, SOR = 3,285 lbs. O2/day 1,491 kg/d

V. PROCESS DESIGN:

CYCLE TIMES

No. of batches/day/SBR	=	4.0	per SBR	
Maximum Fill time	=	3.0	hrs. per basin	
Complete Cycle time	=	6.0	hrs. per basin	
Fill time at Design Flow	=	3.0	hrs.	
Anoxic Fill time	=	1.5	hrs.	50 % *of FILL is anoxic.*
Aerated Fill	=	1.50	hrs.	
React time	=	1.50	hrs.	50 % *of cycle is aerated.*
Settle Time	=	0.75	hrs.	
Decant time	=	0.50	hrs.	
Idle time	=	0.25	hrs.	

VI. AERATION SYSTEM DESIGN:

Aerator elevation	=	2.5	ft.	0.76 m
Nozzle Cant	=	30	°	
Avg aerator submergence	=	15.1	ft.	4.62 m
Total aeration time	=	3.00	hrs./cycle	
	=	12.0	hrs./basin/day	
SOR for aeration design	=	137	lbs./hr/basin	62 kg/hr
Design gassing rate	=	40.0	SCFM / jet	1.13 m^3/min/jet
Site gassing rate	=	40.9	ICFM / jet	1.16 m^3/min/jet

(*notes values assumed by Siemens, which must be verified or revised by client or his designated agent)

Absorption efficiency	=	22.8	%	
Design air flow	=	579	SCFM	16 m^3/m
Jets required per basin	=	14	Model 40 Jets	
Jet headers per basin	=	1	Type : **B** Orientation : **L**	B = BDM, C = CM L = Length, W = Width
Jets per header	=	15	Model 40 Jets	

VII. BLOWER DESIGN CALCULATIONS:

Operating blowers	=	1	per aerating basin		
Type of Blowers :	=	1	*1 = Rotary, positive displacement* *2 = Multistage Centrifugal* *3 = Variable-vane centrifugal*		
Total Number of Blowers	=	2	including a spare		
Air flow per blower	=	579	SCFM	984 m^3/hr	
Inlet losses	=	0.3	psig *	2.07 kPa	0.02 bar
Net inlet pressure	=	13.61	psia (absolute)	93.83 kPa	0.94 bar
Discharge piping losses	=	0.7	psig *	4.83 kPa	0.05 bar
Static head + Aerator loss	=	6.66	psig average	45.89 kPa	0.46 bar
	=	6.81	psig at Max. W.L.	46.95 kPa	0.47 bar
	=	5.57	psig at Min. W.L.	38.43 kPa	0.38 bar
Total discharge pressure	=	7.66	psig average	52.78 kPa	0.53 bar
		7.81	psig maximum	53.85 kPa	0.54 bar
		6.57	psig minimum	45.32 kPa	0.45 bar
Design ambient temp.	=	100	°F maximum	38 °C	
		0	°F minimum	-18 °C	
Site air flow required	=	663	ICFM average	18.79 m^3/min	
Equiv. sea level pressure	=	8.66	psig average	59.68 kPa	0.60 bar
Nominal blower efficiency	=	64	% *		
BHp per blower	=	28.8	BHp/Blower	21.5 BkW 23.8 kW @ 90% ME	
Blower BHp/aerating basin	=	28.8	BHp/Basin	21.5 BkW 23.8 kW @ 90% ME	

(*notes values assumed by Siemens, which must be verified or revised by client or his designated agent)

VIII. PUMP DESIGN CALCULATIONS:

Number of pumps	=	1	per basin	
Type of Pumps :	=	1	*1 = Dry Pit Centrifugal* *2 = Submersible Centrifugal* *3 = Submersible Propeller*	
Total number of pumps	=	2		
Flow per pump	=	2,746	GPM	173.2 l/s
Required jet head	=	17	ft.	5.2 m
System headloss	=	4	ft.*	1.2 m
Total pump head	=	21	ft.	6.4 m
Assumed pump efficiency	=	76	% *	
BHp per pump	=	19.2	BHp/Pump	14.3 BkW 15.9 kW @ 90% ME
Total pump BHp/basin	=	19.2	BHp/Basin	14.3 BkW 15.9 kW @ 90% ME

IX. AERATION SYSTEM SUMMARY:

Standard Oxygen Required	=	3,285	lbs./day	1,493 kg/d
Avg. BHp for 24 hrs.	=	48	BHp**	40 kW
Assume Cost of Power	=	0.05	$/kW	
Max. Annual Cost of Power*	=	17,398	$/yr, (assuming 90% motor efficiencies)	

** *Actual power draw is typically less due to Demand-Proportional aeration process control*

(*notes values assumed by Siemens, which must be verified or revised by client or his designated agent)

X. DECANTER SIZING:

Cycles per day	=	8		
Volume per decant	=	62,500	Gallons at Design Flo\	237 m^3
		62,500	Gallons Decantable	237 m^3
Decant time	=	0.50	hrs.	
Average decant flow	=	2,083	GPM	131.4 l/s

(*notes values assumed by Siemens, which must be verified or revised by client or his designated agent)

SIEMENS

4/2/2008

McBride Engineering Project

AEROBIC DIGESTER AERATION SYSTEMS

DESIGN CALCULATIONS

SIEMENS FILE NO. JTP-08xxx

24 Day SRT

I. DIGESTER DESIGN PARAMETERS:

		English Units	Metric Units
Sludge Production Estimate			
On a COD Basis :			
COD removed	=	2,189 lbs/d	995 kg/d
Avg biosolids yield, dX	=	547 lbs/d * Assumes yield = 0.25 g/g	248 kg/d
Avg net yield (bio+inerts)	=	1,039 lbs/d based on CODr*	471 kg/d
Design sludge production	=	1,156 lbs/day (bio+inert TSS)	524 kg/d
On a BOD basis :			
BOD removed	=	1,230 lbs./day	558 kg/d
# sludge/# BOD rem.	=	0.94	
Avg net yield (bio+inerts)	=	1,156 lbs/day	524 kg/d
Waste sludge concentration	>	8,500 mg/l	
Gravity Thickened ? (Y or N	=	Y	
Digester sludge concentratic	=	2 %	
Digester sludge production	=	6,933 gpd	26 m^3/d
Elevation	=	1,500 ft. MSL	457 m
Avg. barometric press.	=	13.91 psia	95.9 kPa

(*notes values assumed by Siemens, which must be verified or revised by client or his designated agent)

II. DIGESTER BASIN DESIGN:

Number of digesters	=	1		
Solids Retention Time	=	**23.8**	days SRT	
If Rectangular Basins are used :				
Length/Width Ratio	=	3.82	: 1	
Length	=	65	ft.	19.81 m
Width	=	17	ft.	5.18 m
If Round Tanks are used :				
Diameter	=	38	ft.	11.44 m
Side Water Depth	=	20	ft.	6.10 m
Total Digester Volume	=	0.17	MG (Nominal)	626 m^3

III. DIGESTER OXYGEN REQUIREMENT:

Percent VSS	=	75	%	
Liquid Temperature	=	20	°C	
% VSS reduction, Expectec	=	39.0	%	
% VSS reduction, Design	=	39.0	%	
Lbs. O2 / lb. VSS destroyed	=	1.42		
Actual Oxygen Required	**=**	**480**	**lbs./day**	**218 kg/d**
	=	**20**	**lbs./hr.**	**9.1 kg/hr**

Convert Process, or Actual Oxygen Requirement (AOR), to Standard Oxygen (SOR) :

Conversion Formula from ASCE Manual of Practice :

$$SOR = \frac{AOR * Cs}{a * (ßCsd - DO) * Ø^{(T-20)}}$$

Where:

Cs = DO saturation at Stnd Conditi
= 9.07*(1+0.4*D/34)
= 11.20 mg/l

Csd = DO saturation at design conditions
= Cst*(Fe+0.4*D/34)
where : Cst = DO saturation at liquid Temp & sea level
= 9.07 mg/l

(*notes values assumed by Siemens, which must be verified or revised by client or his designated agent)

Elev. Factor, Fe	= 0.94	Therefore, Csd	= 10.70
Alpha, a	= 0.75 *	SWD, D	= 20.0 ft
Dissolved O2	= 2.0 mg/l	Beta, ß	= 0.95 *
Liquid Temp, T	= 20 °C	Theta, Ø	= 1.024

Therefore:

Standard Oxygen Required, SOR = 878 lbs./day 399 kg/d

IV. DIGESTER AERATION AND MIXING SYSTEM DESIGN:

Aerator elevation	=	1.0	ft.	0.30	m
Nozzle Cant	=	0	°		
Aerator submergence	=	19.0	ft.	5.79	m
SOR for aeration design	=	37	lbs./hr/basin	16.6	kg/hr
Design gassing rate	=	20.0	SCFM /Diffuser	0.57	m^3/min/diffuser
Site gassing rate	=	20.5	ICFM /Diffuser	0.58	m^3/min/diffuser
Absorption efficiency	=	14.3	%		
Diffusers req'd for aeration	=	12.8	Diffusers per basin		
Mixing Power required	≥	31.7	30 scfm/1000 ft3		
Add'l diffusers req'd for mixi	=	21.4	Diffusers per basin		
Diffuser grids per basin	=	1			
Diffusers per grid	=	35	Diffusers per basin		
Design air flow	=	700	SCFM per basin	19.8	m^3/min

V. DIGESTER BLOWER DESIGN CALCULATIONS:

Operating blowers	=	1	per digester
Type of Blower	=	1	*1 = Rotary, positive displacement* *2 = Multistage Centrifugal* *3 = Variable-vane centrifugal*
Total Number of Blowers	=	2	*including a spare*

(*notes values assumed by Siemens, which must be verified or revised by client or his designated agent)

Air flow per blower	=	700	SCFM	19.8	m^3/min
Inlet losses	=	0.3	psig *	2.1	kPa
Blower inlet pressure	=	13.61	psia (absolute)	93.8	kPa
Discharge piping losses	=	0.7	psig *	4.8	kPa
Static head + Aerator loss	=	8.33	psig average	57.4	kPa
Blower discharge pressure	=	9.33	psig average	64.3	kPa
Design ambient temp.	=	100 0	°F maximum °F minimum	37.8 -17.8	°C °C
Site air flow required	=	802	ICFM average	22.7	m^3/min
Equiv. sea level pressure	=	10.56	psig average	72.8	kPa
Nominal blower efficiency	=	64	% *		
BHp per Blower	=	41.1	BHp/Blower	30.7 34.1	BkW kW @ 90% ME
Blower BHp/aerating basin	=	41.1	BHp/Basin	30.7 34.1	BkW kW @ 90% ME

VI. DIGESTER PUMP DESIGN CALCULATIONS (NOT REQUIRED):

VII. DIGESTER AERATION SYSTEM SUMMARY:

Standard Oxygen Required	=	878	lbs./d	399.1	kg/d
Avg. BHp for 24 hrs.	=	41	BHp	34.1	kW
			Daily Usage	818	kWhrs/d
Assume Cost of Power	=	0.05	$/kW		
Max. Annual Cost of Power	=	14,931	$/yr, (assuming 90% motor efficiencies)		

(*notes values assumed by Siemens, which must be verified or revised by client or his designated agent)

APPENDIX B

Pulsed-Bed Filter Information

Water Technologies

Hydro-Clear® Filters: Count On Them 24/7/365

SIEMENS

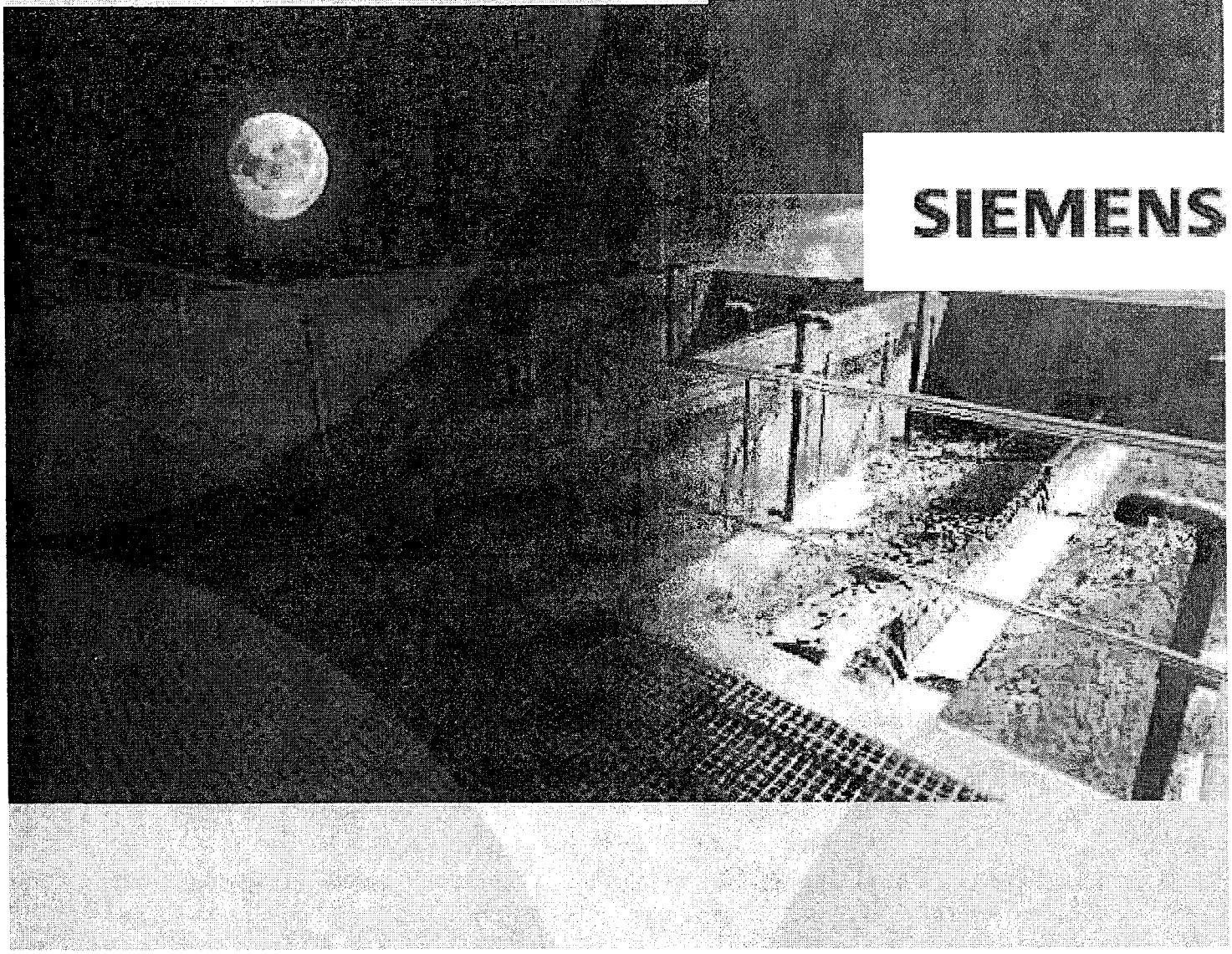

Features and benefits of the Hydro-Clear® filter	
Features	**Benefits**
Shallow, 10-inch bed	Low-profile design reduces excavation, concrete and related structural costs.
Mono media, fine-grained sand	Maximum efficiency. Effectively captures small as well as large particles. Positive particle barrier against solids and turbidity.
Pulse-Mix® system	Regenerates media surface, extending filter runs. Automatically keeps the system on-line during upsets.
Hydro-Scour® backwash system	Effectively backwashes media in 3.5 minutes, at low power and water rates. Cleans media without mechanical surface sweeps or complete bed fluidization, reducing media losses.
Grease removal system	Enables automatic media cleaning, without labor. No manual grease removal or media replacement.
Easy-to-operate control system. Simple, automated operation	Operates unattended 24 hours a day. Keeps plant in compliance 24/7/365.
Modular steel tanks, prefabricated package plants, or concrete tanks	Variety of sizes, flow-rates, construction options. Custom designed for your application.
Field pilot testing units	Proof at your site.
Ideal for retrofits	Enables you to upgrade filtration capabilities while using existing tanks.
Service	Qualified, experienced field technicians readily available for service and/or upgrades to your filtration system.

EXPERIENCE TO GET THE JOB DONE

The Hydro-Clear® sand filter was first installed in a small Ohio subdivision in 1967. We've come a long way since then, having installed over 600 units for both municipal and industrial applications worldwide. And, in 1981, the Hydro-Clear® filter was approved for the California Department of Health's strict Title 22 requirements for unrestricted water reuse applications.

This same technology is probably already at work solving problems exactly like yours. Whether the upstream process is raw water treatment, trickling filter, lagoon, oxidation ditch, or conventional activated sludge; downstream treatment is RO, UV or chlorine contact; or downstream is production activity, a prize trout stream, conventional river or recreational lake, golf course or landscape nursery; we're doing it.

Our filter isn't merely an adaptation of traditional potable water filters, either. The pulsed bed, gravity flow Hydro-Clear® filter was designed specifically to remove suspended particles and turbidity from wastewater treatment plant effluent. Designed to work around the clock, the Hydro-Clear® filter provides unequaled efficiency, combined with the experience to keep your plant compliant 24/7/365.

CUTTING COSTS NOT CORNERS

The Hydro-Clear® filter features a unique underdrain system and a shallow bed of mono-media, fine-grained sand. This design permits the filter media to be "pulsed" periodically as solids build up, extending the filter runs and automatically keeping the filter on-line, despite varying loads and changing water characteristics.

Construction and excavation costs are minimized with the Hydro-Clear® filter due to its shallow cell design, typically ranging from six to nine feet deep. This design also allows it to backwash with unmatched efficiency and cost-effectiveness; typical backwash rates are only 12 gpm/ft^2, with a total duration of 3.5 minutes. This backwash action creates high velocity jets of water for vigorous media scrubbing, providing high particle contact during the backwash cycle, scrubbing the media without completely fluidizing the bed. This makes the Hydro-Clear® filter's backwash pump about half the size of other filters' pumps. Make sure that you're not wasting money on high-energy, inefficient systems.

Hydro-Clear® filter oper

1 Start of filtering cycle Wastewater enters the filter cells through proportioning weirs and cascades into the influent distribution/wash water trough and onto the filter sand through v-notched weirs. Splash plates help distribute the water evenly across the sand. Dissolved oxygen is added to the wastewater through this cascading sequence.

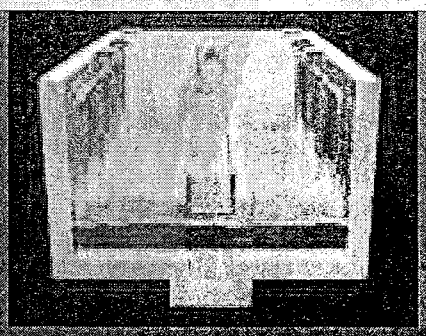

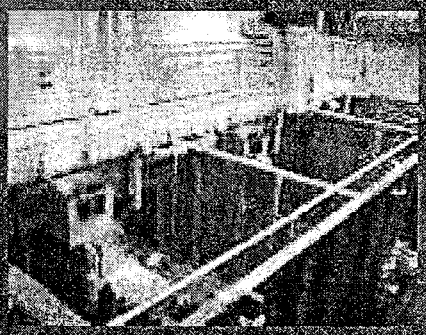

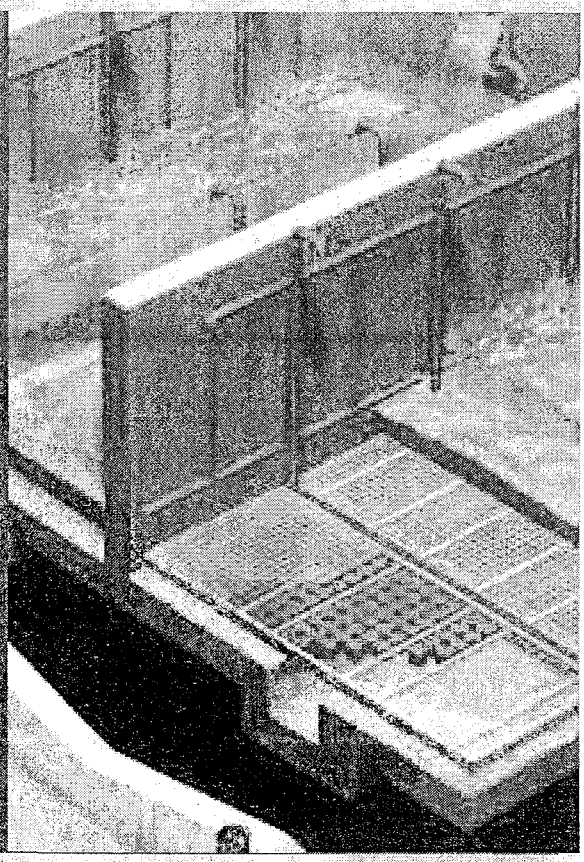

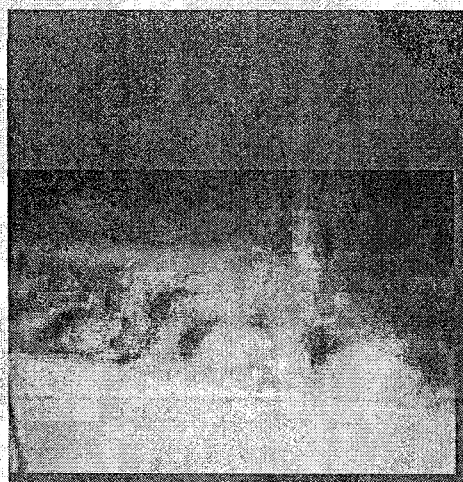

Backwash scrubbing action

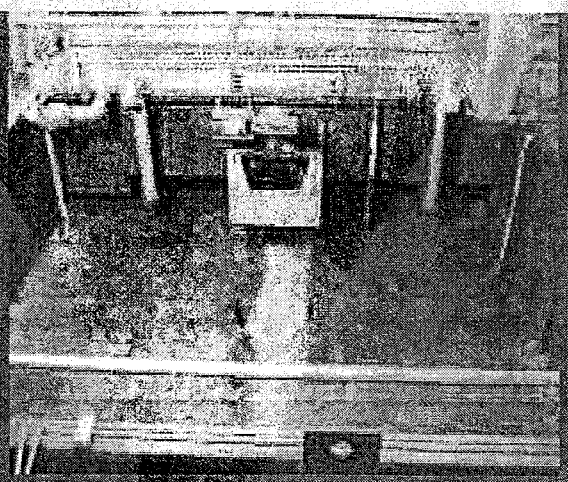

Backwash water flowing in trough, air assisted.

Following each pulse,
surface drops, and t
Ultimately, however, the filt
and the pulsing is disconti
and the backwash cycle is
through the underdrain, p
followed by the backwash. T
the backwash trough. The ba
a rate of 12 gpm/ft^2, then the

ation — How it works

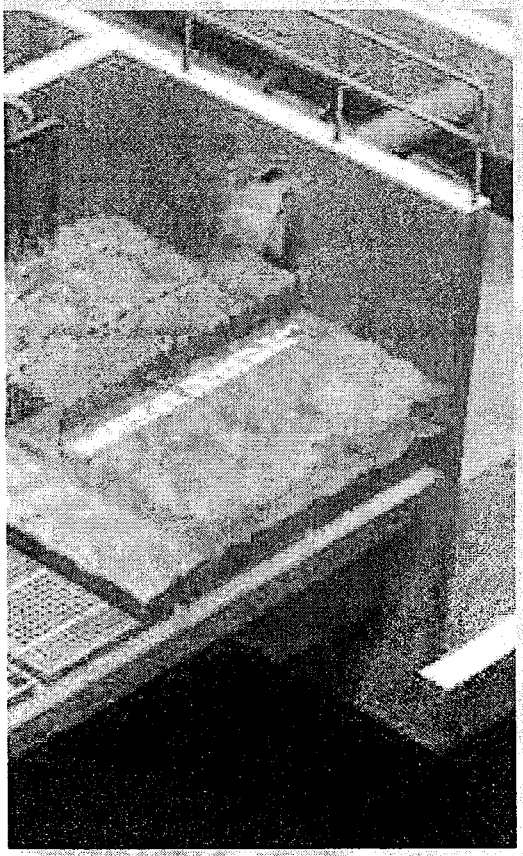

2 Initial clogging... filtering continues

As the effluent reaches the filter media surface, all but the very fine particles in the wastewater are retained on the surface of the media. The finer particles enter the interstices (spaces between the sand grains) and become trapped. In time, large particles may completely cover the filter media surface, causing the water level to rise over the media surface (headloss).

3 Rising liquid level activates Air-Mix® diffuser and Pulse-Mix® systems

The Air-Mix® diffuser uses low pressure diffused air bubbles to create a gentle rolling motion in the liquid over the filter surface, lifting floc particles from the media surface and suspending them in the liquid. The exclusive Pulse-Mix® system provides the capability to automatically regenerate the filtering surface without initiating a backwash. During the Pulse-Mix® cycle, the filtrate outlet valve closes, trapping atmospheric air in the underdrain. The backwash inlet valve opens and the backwash pump floods the underdrain cavity with filtered water. The rising water acts as a piston, pushing the trapped air up through the media to the surface. This 20 second duration air "pulsing" dislodges particles trapped on the media surface and entrains them in the liquid above the filter surface which regenerates the media, resulting in reduced headloss and prolonged filter runs.

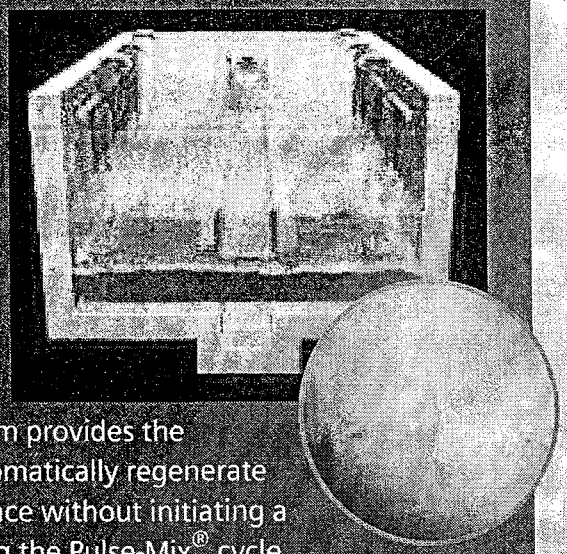

4 Backwash initiated

the liquid level above the filter
he filtration process continues.
ter's solids storage capacity is reached,
nued. Maximum headloss is achieved
activated. Stored filtrate is pumped up
ushing a pulse of air through the bed,
The dirty water is directed out through
ckwash cycle lasts only 3.5 minutes at
filter is returned to the filtering cycle.

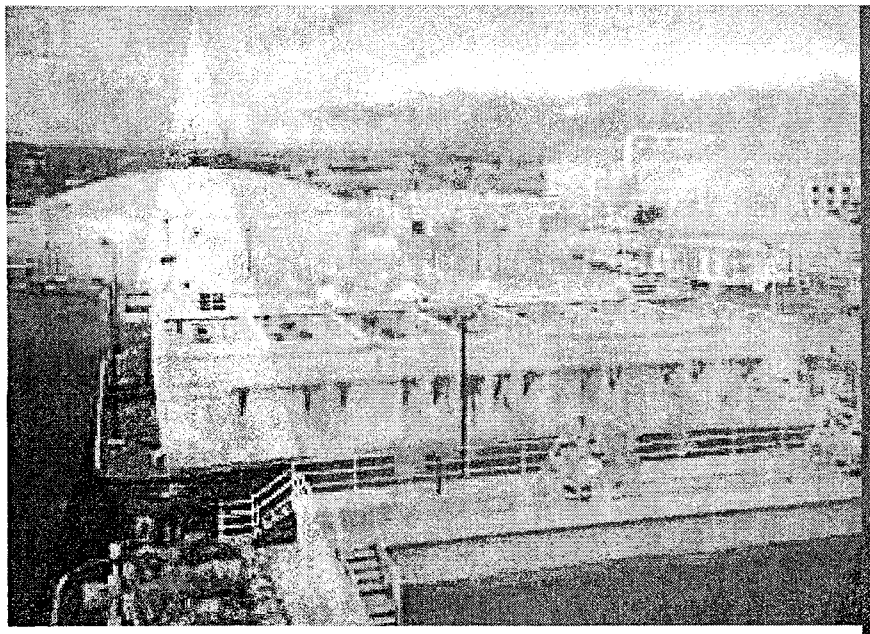

The Hydro-Clear® sand filter has pioneered wastewater reuse applications.

HYDRO-CLEAR® FILTER APPLICATIONS

Tertiary Treatment
- Suspended solids
- Turbidity
- Phosphorus

Wastewater Reclamation, Reuse
- Irrigation
- Groundwater recharge
- Cooling tower makeup

Stormwater Filtration

Combined Sewer Overflow (CSO)

Primary Effluent Filtration (PEF)

Algae Removal

Commercial and Institutional Treatment
- Residential developments
- School and military institutions
- Hotel/restaurant complexes
- Hospital sanitary wastewater
- Resorts and parks

WATER REUSE: LOCAL SOLUTIONS TO A GLOBAL PROBLEM

Municipalities that use water reuse systems fare better than those that don't when faced with drought-like conditions. Our Hydro-Clear® filter meets the rigid State of California Title 22 requirements for unrestricted water reuse applications. There are 36 Hydro-Clear® filter installations in California, of which 25 are used for water reuse. Additional installations across the United States, Europe and Asia perform to all local requirements.

In most cases, the filtered effluent is used for irrigation of golf courses, highway medians, and athletic fields. It is also used for fire and dust control. In all applications, reusing wastewater frees up potable water to be used in the way it was intended: for drinking, household, commercial

GREASE AND OIL? NO PROBLEM!

Colloidal grease and oils build up in any filter system. Traditionally, operators have combated this build-up problem with a manual pre-chlorination. With the Hydro-Clear® filter, you have another option. The semi-automatic Chem-Clean® system emulsifies and removes grease trapped in the filter media, restoring the media to its original condition. As a result, there is no need to pre-chlorinate, and the effluent does not deteriorate because of the emulsified grease.

from left to right:

The Hydro-Clear® filter was designed specifically for filtering wastewater treatment plant effluents.

The Chem-Clean® system restores the sand to its original condition.

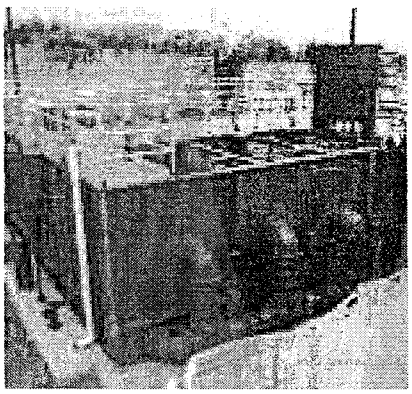

For further information please contact:

Siemens
Water Technologies
301 West Military Road
Rothschild, WI 54474
Tel: 715.359.7211
Fax: 715.355.3335
zimpro.water@siemens.com
www.usfilter.com

The information provided in this brochure contains merely general descriptions or characteristics of performance which in actual case of use do not always apply as described or which may change as a result of further development of the products. An obligation to provide the respective characteristics shall only exist if expressly agreed in the terms of the contract.

Hydro-Clear, Hydro-Scour, Chem-Clean, Air-Mix and Pulse-Mix are trademarks of Siemens, its subsidiaries or affiliates.

©2006 Siemens Water Technologies Corp.
All Rights Reserved

E10001-WTEPS-A4-V1-4A00
DispoNo.21616 K-No.3936

ZP-HCMU-BR-0906
Subject to change without prior notice.

8

Maricopa County
Environmental Services Department
Water and Waste Management Division

Hassayampa Northeast Campus 1 Water Reclamation Facility
#2011645
Second Review Comments

- The paragraph numbering below maintains the numbering of the original comments prepared by MCESD on 6/30/08.
- MCESD has paraphrased all comments and responses for brevity.
- Comments that are not listed have been satisfied.

General

1. MCESD's original comment stated that the design appears to be preliminary because notes on the drawings state "the contractor shall submit detailed (structural/electrical) design drawings".

   MES' response states that the drawing set is not preliminary, the structural and electrical portion of the work will be procured on a design-build basis, and the submitted drawings are intended to delineate the scope of the structural and electrical work.

   MCESD's second review comments:

   a. Provide a preliminary schedule of how the owner intends to complete the design-build project. Include the time periods when the sealed drawings of each discipline will be submitted to MCESD for review and how the construction will be phased, if appropriate.

   b. The review fee for a design-build project is double the fee for a regular review project per Maricopa County Environmental Health Code, Chapter 1, Regulation 5.c.(3). Submit the additional review fee ($3,000.00).

2. MCESD's original comment questioned the sealing of drawings that are outside the engineer's discipline.

   MES' response was that the structural and electrical portion of the work will be procured on a design-build basis.

   MCESD's second review comment:

   a. MCESD remains concerned that the engineer is sealing drawings for disciplines that are outside his area of expertise. Provide a letter from Arizona Board of Technical Registration that this is permissible for a design-build project.

   b. Show that the owner has the expertise to review and approve the sealed drawings prepared by the design-build contractor and how the quality of the work will be monitored.

Design Report

4. Page 4-1, MCESD's original comment stated that MCESD considers the influent pump station to be an off-site component of the WRF and requires that the Owner submit the design for review as part of the WRF review.

MES' response states that the influent pump station is not included in its scope of work and requests that the Approval to Construct (ATC) for the WRF include stipulations stating that approval of the influent pump station must be obtained before an AOC is issued.

MCESD's second review comment: Design information is needed to show the adequacy of the pump station design and how the pump station control system will integrate with the WRF. Submit pump station design data and provide the instrumentation and control strategy to describe how the two facilities will be linked.

5. Page 4-2, MCESD's original comment requested calculations to show how one SBR basin can be removed from service for maintenance while maintaining treatment capacity.

   MES' response stated that one SBR basin could process the full influent flow for a limited amount of time.

   MCESD's second review comments:

   a. Define the "limited amount of time".

   b. Provide a description of how single basin operations would work, similar to the description contained in Section 4.3.1 of the Design Report.

   c. Provide sealed process calculations to show how treatment will occur under single basin operation (Refer to MCESD Comment #6, below).

6. Page 4-4, Table 2, MCESD's original comment requested signed and sealed process calculations to demonstrate the predicted treatment results.

   MES' response stated that sealed design calculations cannot be provided because they are prepared by the SBR system manufacturer, who warrants SBR performance. MES provided a copy of the SBR performance calculations that were prepared by the manufacturer.

   MCESD's second review comments:

   a. The SBR performance calculations included in MES' response were submitted under the seal of Brian McBride, P.E. MCESD is concerned that the engineer may be sealing process calculations for work that is outside his area of expertise. See Comment #2.

   b. Provide a copy of the SBR system manufacturer's warrantee.

   c. The BOD, TSS, COD, and Total N shown in the process calculations are 300 mg/l, 300 mg/l, 600 mg/l, and 45 mg/l, respectively. These amounts should be 400 mg/l, 400 mg/l, 1000 mg/l and 75 mg/l per Table 6-1 of the MAG 208 WQMP for the *HUC Northeast Service Area, Revised March 2007*. Provide revised calculations.

9. Page 4-9, MCESD's original comment (a.) stated that the report must include a detailed description of the effluent reuse/disposal sites.

   MES' response stated that direct reuse is MES' top priority, specific reuse disposal sites have not been determined, and an AZPDES permit has been obtained.

   MCESD's second review comment: Section 7.1.1 of the MAG 208 WQMP for the *HUC Northeast Service Area, Revised March 2007*, states that "Campus 1 will discharge, only as a last resort, to the Hassayampa River when/if production exceeds the reuse and recharge demand." Provide a copy of the master planning, design, and construction scheduling of all reuse, recharge, and discharge projects.

Drawings

21. N2: MCESD's original comments were similar to Comment #4 and listed specific design requirements for the influent pump station.

    MES' response was similar to its response to Comment #4.

    MCESD's second review comment: Same as for Comment #4.

23. N4, etc.: MCESD's original comment stated that it needs to see how the overall system will be controlled and requested a control logic description.

MES' response stated that the controls and logic description are the responsibility of the contractor's EI&C designer.

MCESD's second review comment: Provide upgraded process and instrumentation drawings that show how the entire system will be controlled and a detailed control and instrumentation description.

Specifications

30. MCESD's original comment was "A set of signed and sealed specifications is needed."

MES' response stated "Project specifications have not been prepared. Per the intended design/build procurement, the equipment will be specified by model number and equipment selection will be finalized by shop drawing submittals."

MCESD's second review comment:

a. Provide technical literature for all equipment that will be used for the project.

b. Materials and workmanship standards must also be established to define the quality of the project. Provide a copy of the documents that require the design-build contractor to construct the project to the quality standards established the owner.

Please note that all files with the date 060208 attached are for the initial submittal to MCESD, and all files with the 070708 date attached are for the resubmittal.

If you have any issues – please let me know.

Thanks,
Deanne

Deanne M. Kincade, P.E.
Senior Project Manager
McBride Engineering Solutions, Inc.
6100 W. Gila Springs Place, Suite 7, Chandler, AZ 85226
Tel: 480.759.9608 Cell: 480.390.7234 Fax: 480.706.1106

From: Robin Bain [mailto:Robin.Bain@gwresources.com]
Sent: Wednesday, July 16, 2008 6:00 PM
To: Tim Sabo; Debbie Amaral
Cc: Deanne Kincade
Subject: Hassy Ranch ATC application and response to comments

Tim
Tomorrow morning you should be able to pull down the scanned files – Deanne can you email us and let us know when they are ready? Thanks

https://smblive.cybertrails.net/globalwaterresources

and this sign in information:

Username: global.download@gwresources.com

Password: gwdownload

Robin Bain
Director of Regulatory Affairs
Robin.Bain@gwresources.com

Phn 623.580.9600
Fax 623.518.4013
Cell 623.217.7202

Global Water
21410 N. 19th Avenue, Suite 201, Phoenix, AZ 85027
www.gwresources.com

This e-mail message (including any attachments) contains confidential information intended for a specific individual and purpose, and is protected by law. If you have received this message in error, please notify the sender at (623) 580-9600 and delete it immediately. Any disclosure, copying, or distribution of this message, or the taking of any action based on it, is strictly prohibited.

Please consider the environment before printing this email.

9

MCBRIDE ENGINEERING SOLUTIONS, INC.
6100 W. Gila Springs Place, Suite 7
Chandler, AZ 85226

Principal
Brian P. McBride, P.E.

July 22, 2008

Ken James
Maricopa County Environmental Services Department
Water and Waste Management Division
1001 N. Central Avenue, Suite 150
Phoenix, Arizona 85004

Re: Hassayampa Utility Company Northeast Campus 1 WRF
MCESD No. 2011645
Review Comments dated July 17, 2008

Dear Mr. James:

We have reviewed your second comments on the Hassayampa Ranch WRF design dated July 17, 2008, and have addressed the following items per your request. We have included your second review comments (in italics) followed by our response (in bold).

GENERAL

1. a. *Provide a preliminary schedule of how the owner intends to complete the design/build project. Include the time periods when the sealed drawings of each discipline will be submitted to MCESD for review and how the construction will be phased, if appropriate.*

   The estimated start of construction is tentative based on the pace of development, and the final construction schedule will be determined by the Contractor. However, the preliminary project milestone schedule is as follows:

• Solicitation for Contractor SOQs	March 2009
• Award of Contract	April 2009
• Execution of Contract	May 2009
• Begin Major Equipment Submittals	June 2009
• Structural Design Submittals	July 2009
• Contractor Mobilization	July 2009
• Initiate Excavation, Civil and Site Preparation	July 2009
• EI&C Design Submittals	September 2009
• Initiate Facilities Construction	November 2009
• Initiate Equipment Installation & EI&C Construction	March 2010
• Substantial Completion	October 2010
• Startup and Commissioning	November 2010
• Final Completion	December 2010

b. The review fee for a design/build project is double the fee for a regular review project per Maricopa County Environmental Health Code, Chapter 1, Regulation 5.c.(3). Submit the additional review fee ($3,000.00)

The additional review fee is enclosed.

2. *a. MCESD remains concerned that the engineer is sealing drawings for disciplines that are outside his area of expertise. Provide a letter from Arizona Board of Technical Registration that this is permissible for a design/build project.*

According to Kathryn Fuller, the Investigations Manager at the AZ Board of Technical Registration, R4-30-301 does not prohibit the Registered AZ Civil Engineer from providing sealed drawings that specify the requirements for the construction of the structural or electrical work provided that the documents indicate that the design is the responsibility of the contractor. She agreed that this is common for design-build documents or for specific portions of the work such as fire protection systems or pipe support design. She said that there is no method to request a pre-emptive clarification of the rules but that she would be willing to discuss the matter with you directly. Her direct phone number is (602) 364-4945.

b. Show that the engineer has the expertise to review and approve the sealed drawings prepared by the design/build contractor and how the quality of work will be monitored.

As stated in the documents, the structural and electrical design drawings must be completed by a registered Arizona engineer and will be reviewed by the Owner or the Owner's Professional Engineer consultant for compliance with the requirements. Registered professional engineers are responsible for the designs they complete and we know of no statutory requirement that the designs be reviewed by another professional engineer. However, once the contractor is selected Global Water plans to hire a qualified civil engineer to provide construction engineering services whereby all the contractor's submittals will be reviewed and the quality of the work will be closely monitored.

DESIGN REPORT

4. *Design information is needed to show the adequacy of the pump station design and how the pump station control system will integrate with the WRF. Submit pump station design data and provide the instrumentation and control strategy to describe how the two facilities will be linked.*

The Influent Pump Station Basis of Design and Control Descriptions are attached for your review.

5. *a. Define the "limited amount of time".*

By a "limited amount of time" we mean that this temporary operation mode does not provide the same energy efficiency or process redundancy that is provided under full operation and so should not be considered a normal or long-term operating mode.

b. Provide a description of how single basin operations would work, similar to the description contained in Section 4.3.1 of the Design Report.

Per the SBR system manufacturer: "When one tank operation is desired, the system is operated in the continuous flow mode. Flow is directed to the one tank selected. During continuous feed operation, the liquid level will always rise at a rate proportional to the influent flow rate, except during *filled decant.* In order to allow adequate time for *filled settle* and *filled decant*, aeration must be halted below the normal TWL. As the flow rate increases, the controller will stop aeration at lower liquid levels to allow

time for *filled settle*. These elevations have been set in the program and cannot be changed without consulting the factory. Since *anoxic fill* takes place during *filled settle* and *filled decant* periods, the aeration system will typically start operation shortly after the end of *filled decant*. In one-tank operation, as in multi-tank operation, the decanters automatically open at ETWL, which is typically TWL plus one foot. There is no normal TWL in single-tank operation.

Since one-tank operation has no *react* or *idle* periods, there is no automatic Vacflush or sludge wasting. These operations must be done manually.

Note: The continuous flow mode of operation is only to be used if necessary. In time, effluent quality can degrade under continuous feed operation. In addition, nutrient removal is less efficient under continuous feed operation."

c. Provide sealed process calculations to show how treatment will occur under single basin operation.

As stated previously, the SBR process is the responsibility of and guaranteed by the manufacturer and therefore we cannot provide sealed calculations for their design. However, the ability to operate under the design conditions in single-basin mode is a requirement for the manufacturer's design.

6. *a. The SBR performance calculations included in MES' response were submitted under the seal of Brian McBride, P.E. MCESD is concerned that the engineer may be sealing process calculations for work that is outside his area of expertise.*

The SBR performance calculations were provided by the selected manufacturer and attached to the report. While MES (generally) and Brian McBride, P.E. (specifically) are highly qualified to produce and seal such calculations, in this case the process performance is the responsibility of the manufacturer and therefore the calculations were not developed or sealed by MES.

b. Provide a copy of the SBR system manufacturer's warrantee.

As with any other piece of process equipment such as a UV disinfection system, the SBR system manufacturer's performance guarantee and warranty information will not be available until completion of the equipment procurement process.

c. The BOD, TSS, COD, and Total N shown in the process calculations are 300 mg/L, 300 mg/L, 600 mg/L, and 45 mg/L, respectively. These amounts should be 400 mg/L, 400 mg/L, 1000 mg/L, and 75 mg/L per Table 6-1 of the MAG 208 WQMP for the HUC Northeast Service Area, Revised March 2007. Provide revised calculations.

The BOD, TSS, COD and Total Nitrogen conditions presented in the MAG 208 WQMP were conservative in nature and account for potential long-term influent wastewater conditions at build-out of the facility. Influent wastewater characteristics assumed for the initial phase of the Hassayampa Ranch WRF are based on typical values for new Arizona developments and current data obtained from Global Water's PVUC Campus 1 WRF from February 2007 to February 2008. The influent assumptions used for this phase are consistent with previous values submitted to and approved by MCESD for similar facilities.

9. *Section 7.1.1 of the MAG 208 WQMP for the HUC Northeast Service Area, Revised March 2007, states that "Campus 1 will discharge, only as a last resort, to the Hassayampa River when/if production exceeds the reuse and recharge demand." Provide a copy of the master planning, design, and construction scheduling of all reuse, recharge, and discharge projects.*

All effluent disposal requirements for this phase of the facility are satisfied solely by the 1.0 MGD AZPDES permit already approved by ADEQ. Additional forms of effluent disposal, including direct reuse and recharge, will be permitted as they are developed.

DRAWINGS

21. N2: Same as for Comment #4..

Please see response to Comment #4.

23. N4, etc: Provide upgraded process and instrumentation drawings that show how the entire system will be controlled and a detailed control and instrumentation description.

The completion of "upgraded" process and instrumentation drawings (P&IDs) that show how the entire system will be controlled and a detailed control and instrumentation description are the responsibility of the contractor. The contractor is not under contract at this time, but P&IDs and control descriptions will be submitted upon completion.

SPECIFICATIONS

30. a. Provide technical literature for all equipment that will be used for the project.

The only equipment that has been pre-selected at this time is the Siemens Jet Tech OMNIFLO SBR system. Technical literature on the OMNIFLO SBR is enclosed for your review. No other equipment has been pre-selected or sole-sourced and therefore technical literature will not be available until the equipment is procured.

b. Materials and workmanship standards must also be established to define the quality of the project. Provide a copy of the documents that require the design/build contractor to construct the project to the quality standards established by the owner.

Global Water is currently developing a Standard Form of General Conditions of Contract between Owner and Design-Builder for the Hassayampa Ranch WRF project (per Design-Build Institute of America). This document and the System Level Technical Statement of Requirements (TSORs) included will dictate the quality standards established by the Owner. In addition, once the contractor is selected, Global Water plans to hire a qualified civil engineer to provide construction engineering services whereby all the contractor's submittals will be reviewed and the quality of the work will be closely monitored.

7/22/08

We trust that the responses provided herein will be sufficient response to all deficiencies. If you have questions or concerns, please contact me at 480-759-9608.

Sincerely,

Brian P. McBride, P.E.
Principal
McBride Engineering Solutions, Inc.

Enclosures

cc: Jason Bethke, P.E., Director of Engineering, Global Water Resources

GLOBAL WATER
RELIABLE · RENEWABLE · REUSABLE

ES

HASSAYAMPA RANCH (CAMPUS 1) WATER RECLAMATION FACILITY

Influent Pump Station
BASIS OF DESIGN AND CONTROL DESCRIPTION

July 2008

1.0 INTRODUCTION 1
2.0 INFLUENT FLOW QUANTITY 1
3.0 DESIGN CRITERIA 2
3.1 Station Configuration 2
3.2 Station Appurtenances 3
4.0 PUMP OPERATION AND LEVEL CONTROL 3
4.1 Control Locations 4
4.2 General Control Strategy 4
4.3 Specific Control Requirements 4
4.4 Recommended Initial Set Points 5
4.5 Maximum Pump Speed (100%) – 60 Hz 6
4.6 Alerts and Alarms 6
5.0 ODOR CONTROL SYSTEM 7
5.1 Controlled Equipment 7
5.2 Instrument Numbers and Ranges 7
5.3 Control Locations 7
5.4 General Control Strategy – not used 7
5.5 Specific Control Requirements – not used 7
5.6 Alerts and Alarms 7
5.7 Recommended Initial Set Points – not used 7

Registered Professional Engineer (Civil)
CERTIFICATE NO. 33441
BRIAN P. McBRIDE
Date Signed 7-22-08
ARIZONA U.S.A.

EXPIRES 3/31/2011

GLOBAL WATER
RELIABLE · RENEWABLE · REUSABLE

ES

HASSAYAMPA RANCH (CAMPUS 1) WATER RECLAMATION FACILITY

Influent Pump Station
BASIS OF DESIGN AND CONTROL DESCRIPTION

July 2008

1.0 INTRODUCTION

The Global Water - Hassayampa Utility Company (HUC) Hassayampa Ranch Water Reclamation Facility (HR WRF) will be located on the north side of Indian School Road, east of 339th Avenue in Maricopa County. The facility will be in the southeastern quarter of Section 22, Township 2 North and Range 5 West of the Gila and Salt River Base and Meridian. The Hassayampa Ranch service area includes approximately 2,050 acres of land, predominantly north of Indian School Road and East of 343rd Avenue. The HUC HR WRF is planned to be constructed in three phases beginning with 0.5 million gallons per day (MGD), expanding to 1 MGD in Phase II and 3 MGD in Phase III.

An influent pump station (IPS) will be required since the design concept is to bring flow into the HR WRF from pipelines located in Indian School Road, which is south and downgradient of the proposed headworks. The IPS is assumed to be on a separate site adjacent or within the right-of-way for Indian School Road.

Design and construction of the IPS is a separate project from the design and construction of the HR WRF. This Basis of Design and Control Description document serves to detail the minimum requirements for the IPS. As a minimum in Phase I, a large diameter pre-cast manhole or cast-in-place rectangular station with provisions for expansion will be required. If a circular wet well design is constructed, a second wet well may be required to accommodate additional pumps as Phase II and Phase III are implemented.

2.0 INFLUENT FLOW QUANTITY

The HUC HR WRF is planned to be constructed in three phases to service the residential and commercial developments within the service area. Wastewater generation rates were described in the

Design Concept Report for the WRF. The influent pump station will be required to provide pumping capacity for the flow rates listed in Table 2-1.

Table 2-1 Design Peaking Factors

Phase	Treatment Capacity (MGD)	Average Day Flow (GPM)	Peak Hour Factor	Peak Hour Flow (GPM)
I	0.5	350	3.0	1050
II	1.0	700	2.5	1750
III	3.0	2100	2.0	4200

3.0 DESIGN CRITERIA

For the initial phase the influent pump station will be required to have three equally sized submersible sewage pumps - two duty pumps and one standby. The pumps will be required to operate in a Lead, Lag and Standby configuration. The contractor will be required to provide adjustable frequency drives (AFD), also commonly referred to as variable frequency drives to control the speed of influent pumps, which will allow the pumps to match the influent flow rate. Since start-up flows will be considerably lower than the design capacity, the station may need to be fitted with smaller temporary pumps initially to accommodate the initial flows.

There are a number of low head submersible pumps available from a number of manufacturers. The single pump for the initial phase will be required to have a capacity range between 100 and 550 gpm. Two pumps will be expected to provide a capacity range between 500 and 1100 gpm and the third pump will be available as a true standby pump. It is anticipated that the total dynamic head for influent pump station will range between 15 and 30-ft.

3.1 Station Configuration

As previously stated, the IPS is assumed to be a large diameter precast concrete manhole-type station. The station will be required to have enough pumping volume to allow no more that ten pump starts per hour, which means at low flows the pumps will be sized to operate for a minimum of 3 minutes with a 3 minute fill cycle. During average flows it is expected that a single pump will run continuously between its minimum and full speed set points and during peak hour flows two pumps will be running.

3.2 Station Appurtenances

3.2.1 Station Construction

The IPS is expected to be either a large diameter pre-cast concrete manhole or cast-in-place rectangular structure. The interior concrete surface will be lined to protect it against corrosion with embedded PVC sheet liner, trowel applied, or spray-on 100 % epoxy coating. Full access to each pump will be required by employing either independent access hatches or a double door torsion assisted access hatch, with a minimum of an H10 traffic rating.

To prevent a build-up of corrosive gases, the pump station will be required to have a ventilation system appropriate for its classification per NFPA 820 with odor control system for the exhaust air.

3.2.2 Pump Appurtenances

The contractor will be required to provide stainless steel guide rails, mounting brackets, bolts and lifting chains for each pump. The pumps will also be required to have friction fittings so that the pumps can be easily removed without requiring personnel to enter the wet well.

The station will be required to have two level sensing ultrasonic transmitters, one as the primary and the other the secondary. The level transmitters will be required to be located in a still well and accessible so operators will be able to check, clean and replace as necessary without entering the wet well.

3.2.3 Piping and valves

The discharge piping will be ductile iron in conformance with Global Water's standard of practice. The contractor will be required to evaluate force main options to determine the best diameter(s) to maintain a velocity of 2 feet per second (fps) during average day flows and between 3 and 8 fps during peak hour flows.

Each pump will be required to have a check valve and isolation plug valve housed within a separate valve vault located adjacent to wet well. Flexible couplings or flexible pipe joints will be required within 2-ft of a structure or vault to prevent stress from to settlement to the pipeline.

4.0 PUMP OPERATION AND LEVEL CONTROL

The influent pump station will be required to have programmable logic controller (PLC) that is fully compatible with Global Water's SCADA system software for controlling the operation of the pumps. Since each pump will be outfitted with an AFD speed, the pump controller will be required to adjust the

pump speed within the desired set point range. The contractor will be required to provide, as a minimum, the following controls strategy.

4.1 Control Locations

- Local pump control is through adjustable frequency drives (1 through 3) at the Influent Pump Station
- Remote pump control is from the Plant SCADA through a PLC located in the plant control room.

4.2 General Control Strategy

- Maintain the wet well level set point with speed control.
- Utilize a rotating Lead, Lag1 and Standby mode of pump operation.

4.3 Specific Control Requirements

- The PLC will automatically receive an ultrasonic wet well level transmitter signal as the process variable for the control. The pumps will be controlled based on the wet well level. (See Figure I-1)
- The operator will designate the initial pump assignments for Lead, Lag1 and Standby unit through the Plant SCADA.
- ***Lead*** pump is to start automatically when the wet well level reaches the Lead Level Set Point (1 PUMP ON) and stop automatically when the level falls to the LOW Level Set point. The AFD will run the pump from min. to max. speed to maintain the Lead Level Set Point.
- ***Lag1*** pump is to start automatically when the wet well level reaches the Lag1 Level Set Point (2 PUMPS ON) and stop automatically when the level falls to the Lead Level Set point. The AFDs will run both pumps from min. to max. speed to maintain the Lag1 Level Set Point.
- The PLC will rotate Lead, Lag1 and Standby unit assignment between starts in order to equalize wear of the pumps under normal operation. The controls will be required to automatically reassign to Standby any pump on indication of:
  - Pump High Winding Temperature
  - Pump Seal Leak Detection
  - Fail to Run Signal
- Under no circumstances are ALL pumps to run simultaneously.
- Any operating pump is automatically stopped (emergency shutoff) on:
  - High Discharge Pressure (5 second delay)

- IPS Wet Well LOW-LOW Level
- Equalization Basin HIGH-HIGH Level (through PLC)
- Screening Channel HIGH-HIGH Level (through PLC)

- All pumps are immediately shutdown on:
  - IPS Wet Well LOW-LOW Level
  - Screening Channel HIGH-HIGH Level

4.4 Recommended Initial Set Points

The initial set point ranges shown in Figure 1 are relative to the assumed bottom elevation of the influent pump station, these set points are intended only as a guide.

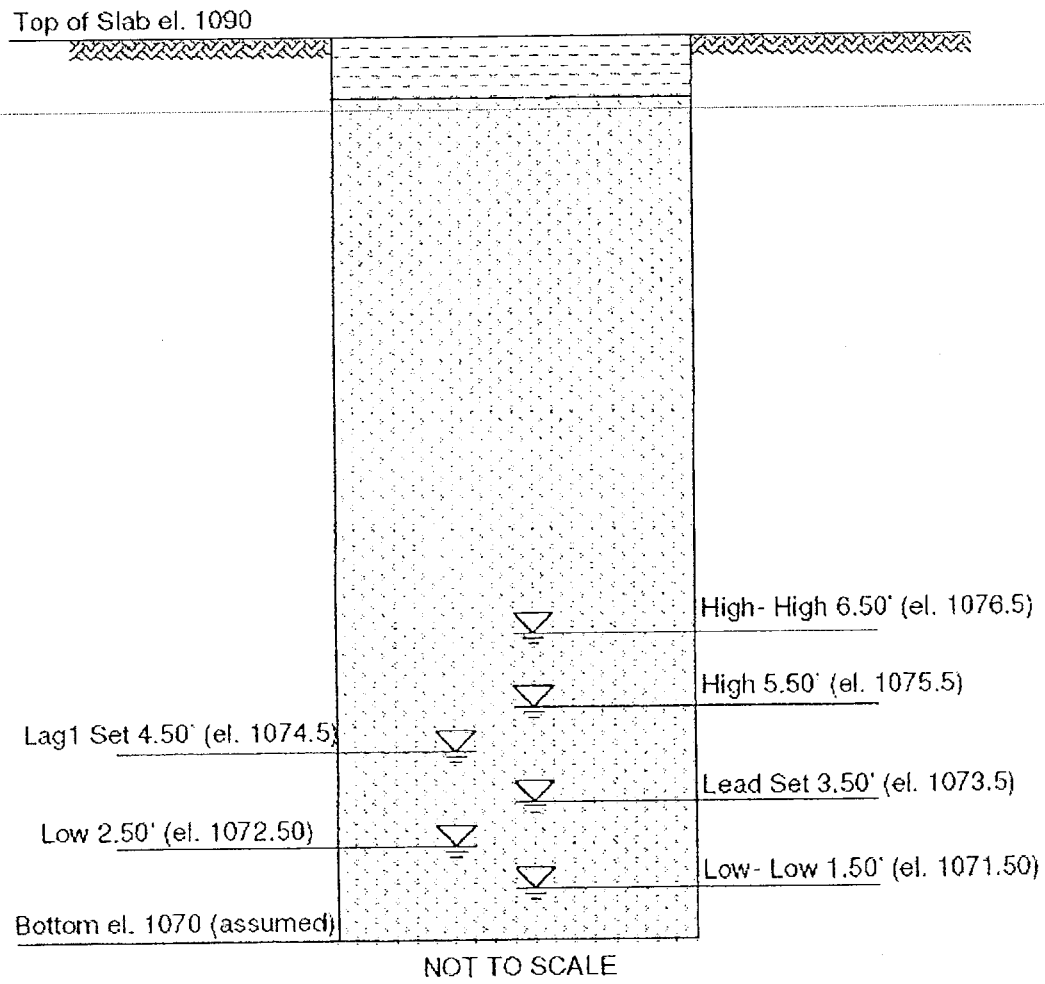

Recommended Level Set Points

FIGURE 1- Influent Pump Station

4.5 Maximum Pump Speed (100%) – 60 Hz

4.6 Alerts and Alarms

- Pump Alarms:
  - High Discharge Pressure (5 second delay)
  - Seal Leak

- Pump Fault (General)
- High Winding Temperature

- IPS Wet Well LOW-LOW Level (Alarm)
- IPS Wet Well HIGH Level (Alert)
- IPS Wet Well HIGH-HIGH Level (Alarm)
- Screening Channel HIGH-HIGH Level (Alarm)

5.0 ODOR CONTROL SYSTEM

5.1 Controlled Equipment

- Dry Chemical Odor Scrubber

5.2 Instrument Numbers and Ranges

- Set by Odor Control Package Supplier.

5.3 Control Locations

- The Odor Control System will be controlled by the package systems controller located at or adjacent to the equipment. SCADA interface if for system monitoring only; no remote control operation is provided from plant SCADA.

5.4 General Control Strategy – not used

5.5 Specific Control Requirements – not used

5.6 Alerts and Alarms

- Fail to Run alarm

5.7 Recommended Initial Set Points – not used

OMNIFLO® SBR PROCESS DESCRIPTION

The **OMNIFLO® Sequencing Batch Reactor** process from Siemens Water Technologies offers clear advantages not available in any other 'periodic process'. Patented mechanical features including the OMNIFLO® SBR process piping, ID/SC Manifold, and solids excluding decanter combine with a batch proportional operating strategy to offer process flexibility and reliability unmatched by any other process.

Periodic Processes

The OMNIFLO® SBR process is a unique combination of equipment and controls for operating a complete secondary wastewater treatment facility. Because there are currently less than six manufacturers offering "periodic" processes, one must understand how each manufacturer addresses the treatment goals, in order to appreciate the unique advantages of the OMNIFLO® SBR process. Periodic processes are simply batch activated sludge processes that accomplish, in discrete time periods within one tank, what conventional continuous flow plants accomplish in multiple tanks.

There is a widespread belief that periodic processes are a recent development, and still in the developmental stage. In truth, most early-activated sludge plants were designed to operate in a batch treatment mode. Recent improvements in microprocessor control systems, automatic valves, and aeration equipment have made batch, or periodic, processes not only practical, but for most applications, very desirable.

The Sequencing Batch Reactor Process

The SBR process is an activated sludge process, as are all periodic processes, but bears no similarity to the extended aeration process. An SBR operates in a true batch mode under non-steady state conditions. It provides for inherent flow equalization and flow blending, and greatly reduces operator skill and attention requirements. Controls range from a

simplified float and timer based system to a PC based SCADA system with color graphics. OMNIFLO® SBR controls use either flow proportional aeration or D.O. controlled aeration to reduce energy consumption and enhance selective pressures for BOD, nutrient removal and control of filaments. The OMNIFLO® SBR has improved the technology in four major areas:

- **Control strategy**
- **Mechanical equipment requirements**
- **Decanter design**
- **Sludge wasting**

In a true batch SBR, there are five basic cycles in each batch. All cycles and variations of cycles are described on the following pages.

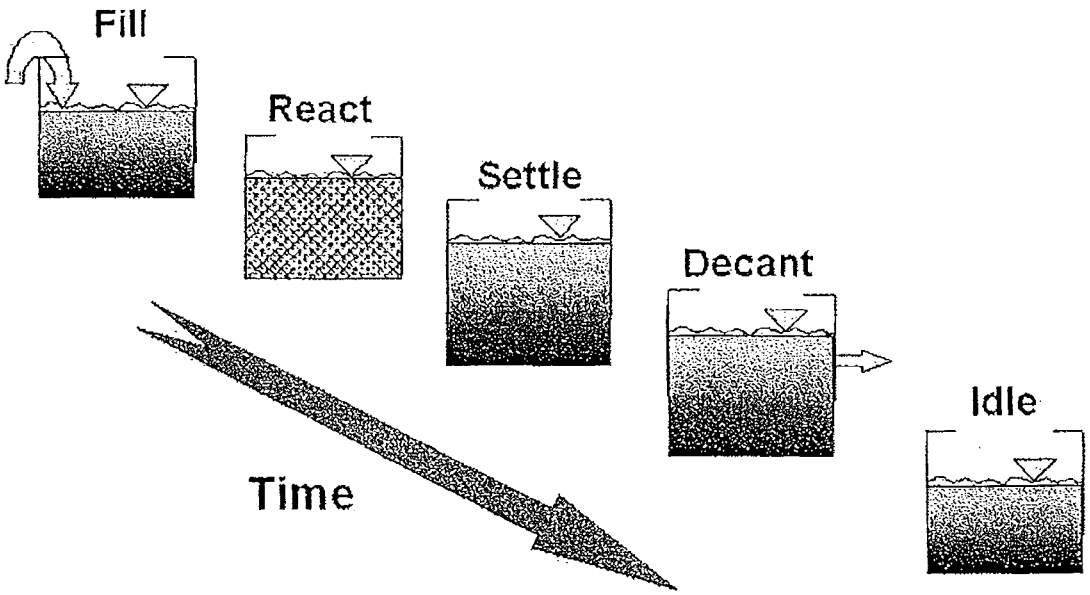

Anoxic Fill

During Anoxic Fill, the basin is loaded with food in the influent through Siemens Water Technologies patented Influent Distribution/Sludge Collection Manifold (ID/SC) creating a high F:M ratio with zero D.O. conditions. The Fill period is primarily anoxic, or without aeration. Aeration is usually initiated late in the Fill period, and continues in the React period, after the influent flow has been diverted to another basin. The Influent Distribution Manifold (ID/SC) allows intimate contact of the influent (food) with the settled biomass in the sludge blanket throughout the length of the basin (please refer to the "Equipment" section of the manual for a complete description of the ID/SC Manifold). During this time, the soluble BOD is absorbed and stored by the facultative biomass until air is received to metabolize the food. The selective pressures exhibited on the biomass of zero D.O. in Anoxic Fill allows good settling, facultative organisms to predominate.

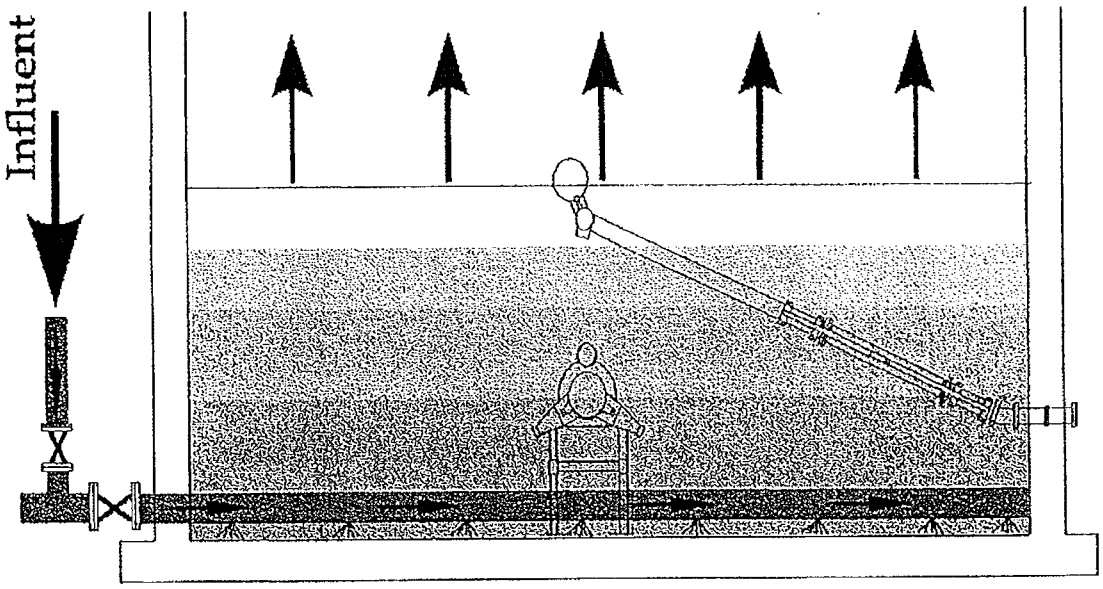

ANOXIC FILL

Aerated Fill

After about 75% of the fill period is complete, the blowers and pumps are automatically turned on to provide air and complete mixing which initiates the "feast" environment for the biomass. The biomass begins to metabolize the food they have absorbed. They utilize the oxygen provided very rapidly with high D.O. uptake rates and low residual D.O. values. It is during the initial stages of Aerated Fill that both Nitrification and Denitrification occur. The ammonia is converted to nitrates within the highly aerated plume of the jet. The nitrates are converted to nitrogen gas in the low D.O. areas of the basin. The denitrifying organisms use the BOD as a food source and the oxygen off the nitrates converting the nitrates to nitrogen gas. Siemens offers a Denitrification step for strict effluent permits. This optional step is detailed on the next page.

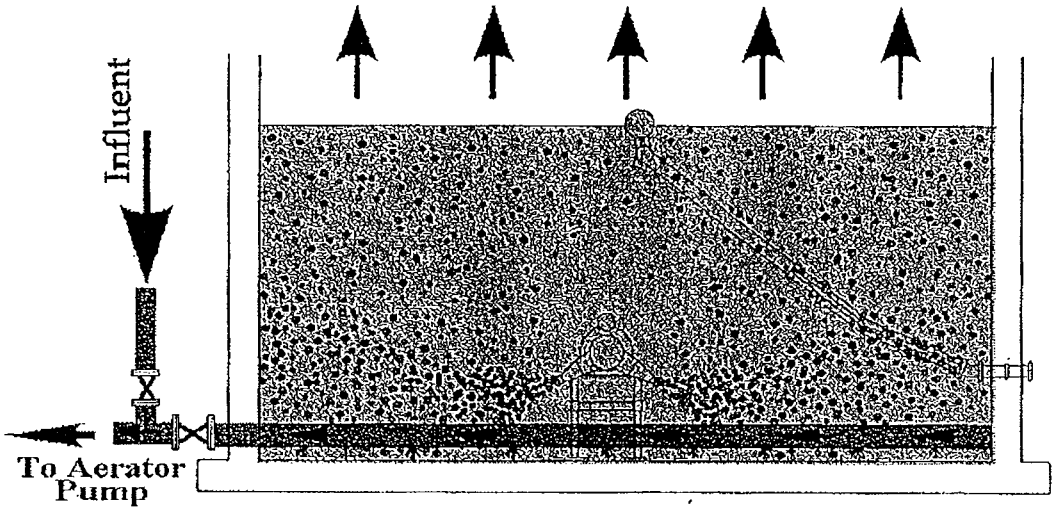

AERATED FILL

Denitrification

We offer an exclusive secondary denitrification phase in which the blowers are turned off and the jet mixing pump continues to mix. This provides anoxic mixing to drive denitrification. Denitrification can be inserted at any point during the aerated cycle (Aerated Fill, React) through the control system. Typically, the denitrification step falls somewhere in the middle of the aerated cycle. The control system allows movement of the denitrification cycle by the operator for maximum flexibility. This can also be easily controlled via an optional D.O. Control System.

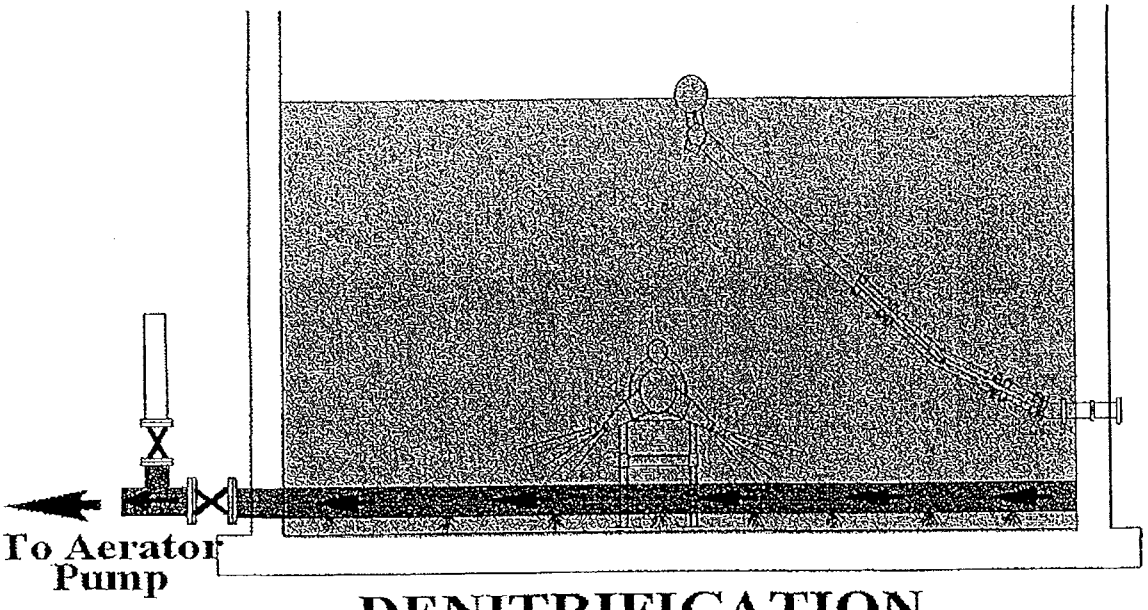

DENITRIFICATION

React

React begins after the basin has completed filling, and the influent flow has been diverted to another SBR tank. No more food (influent) enters the reactor basin during React. This forces the organisms to scour for any remaining BOD. Aeration continues in the full reactor until complete biodegradation is achieved; mixed liquor is drawn through the ID/SC and used as motive liquid for the jet aerator. React continues until the food is consumed and the biomass enters its "famine" state. True React (no influent, no effluent) is critical to achieve intense famine conditions for optimum organism selection. Tests have shown that the food is consumed when the residual D.O. in the basin exceeds 2 mg/l, at which time the residual D.O. begins to rise quickly. We can use self-cleaning D.O. probes to monitor the D.O. level and signal the blower and pump to cease operation, allowing energy conservation.

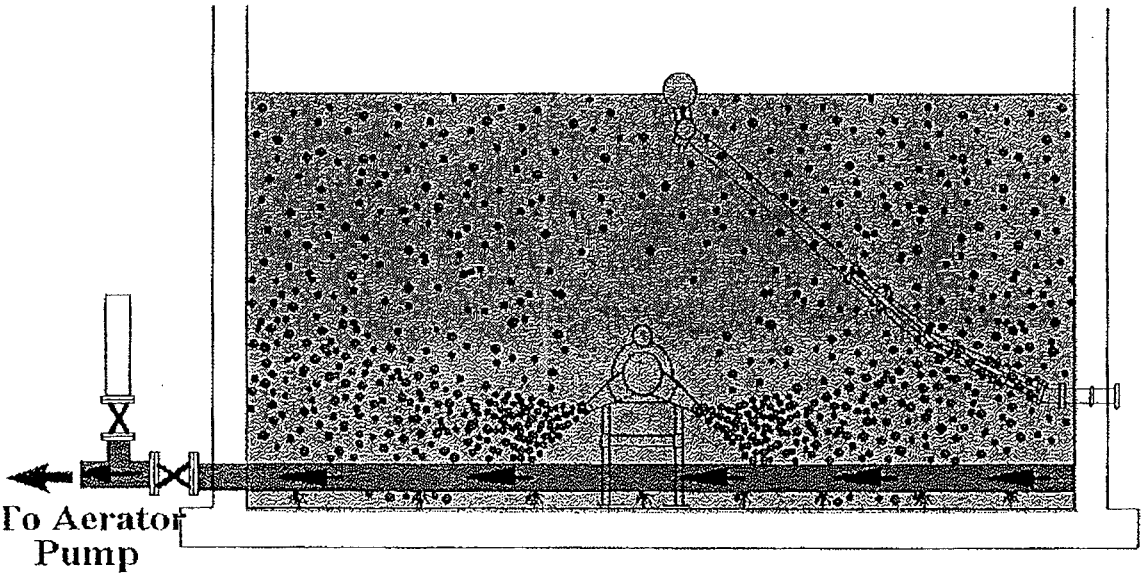

REACT

Perfect Quiescent Settle

The biomass is allowed to settle in perfect quiescent conditions; no influent is introduced during settle and no effluent is decanted. Since the reactor is under true quiescent conditions during settle, 100% of the reactor capacity is available for liquid/solids separation. The relative loading rate during clarification is zero for the batch reactor. A conventional plant has loading rates ranging from 300 to 1200 gpd/ft^2.

The control system allows Perfect Quiescent Settling in the cycle at flows up to 3.5 times average design flow, maintaining consistent treatment during heavy rain infiltration.

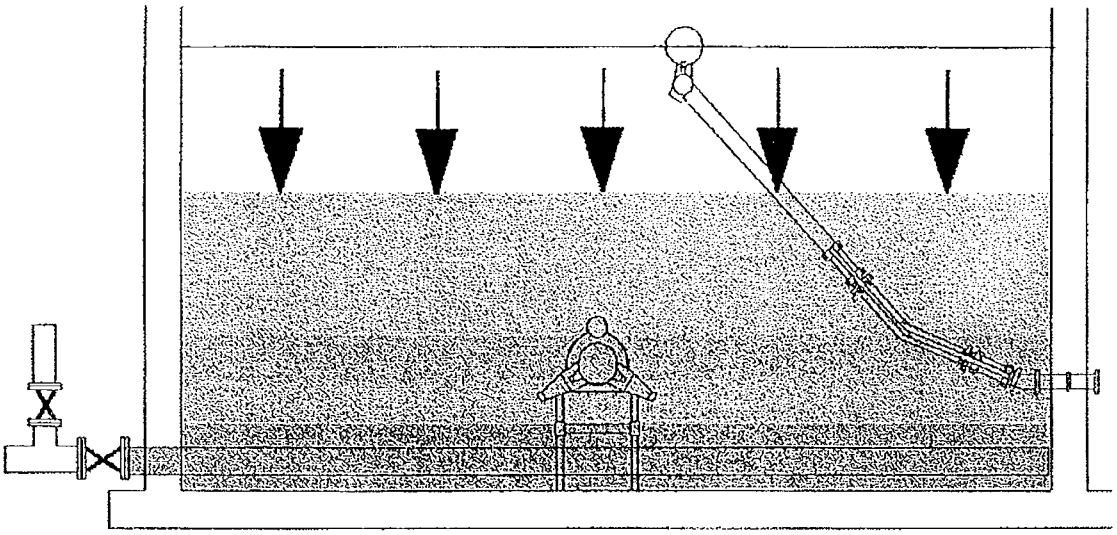

SETTLE

Decant

Following the Settle cycle the effluent withdrawal, or Decant cycle, begins. Decant is initiated by opening an automatic valve. The Siemens floating, solids-excluding decanter is described in the "Equipment" section of this manual. Treated effluent is discharged through the decanter from approximately 18 inches below the surface, avoiding discharge of any surface contaminates. Decant continues until approximately the upper 1/3 of the basin is discharged.

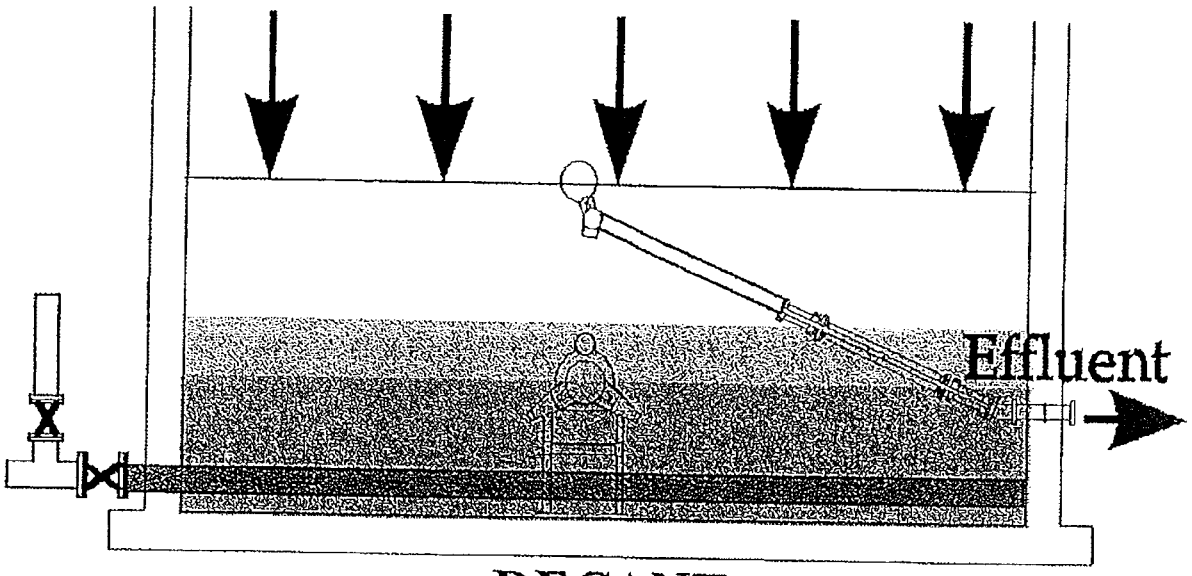

DECANT

Idle/Waste Sludge

While the reactor waits to receive flow, settled sludge is drawn through the Influent Distribution Sludge/Collection Manifold (ID/SC) and pumped to the digester. The jet motive liquid pump is utilized as a waste sludge pump. The settled sludge is withdrawn through the sludge collection manifold, which runs the length of the basin. This multi-point sludge withdrawal yields the thickest sludge possible, reducing side stream sludge treatment operation and maintenance.

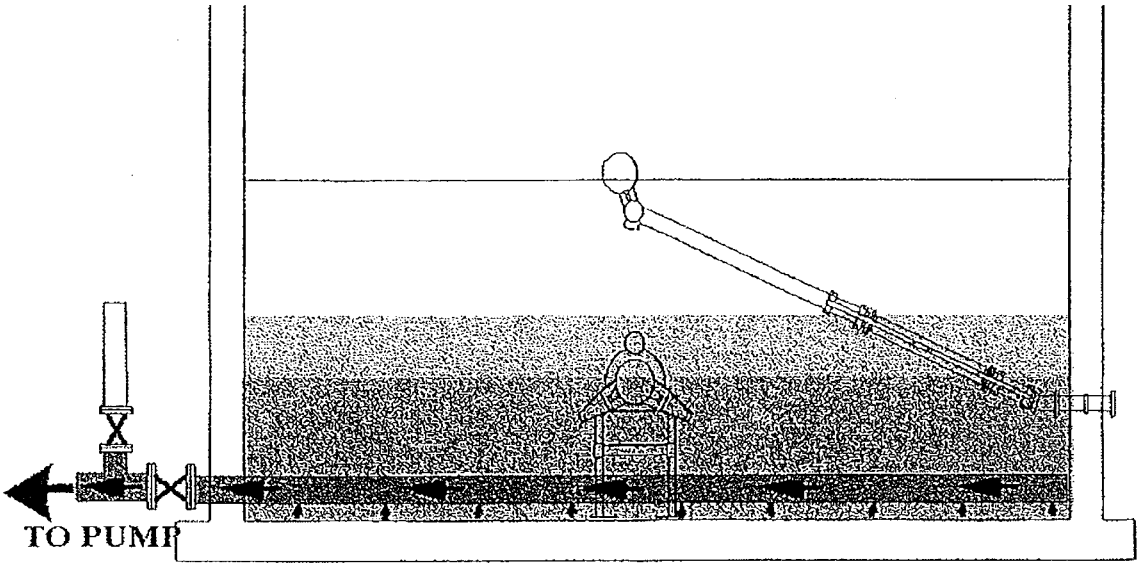

IDLE/WASTE SLUDGE

SIEMENS

Water Technologies

OMNIFLO® SBR DESIGN CRITERIA

SRT and F:M Ratios / D.O. Uptake / Selective Pressures

In an SBR's cycle of operation the oxygen uptake rate, F:M ratio, and D.O. are constantly changing. When aeration is initiated, after the Anoxic Fill period, the F:M ratio is high, and the oxygen uptake rate is very high (it can exceed 125 mg/l/hr). At the end of the Aeration period (React), the F:M ratio is zero and D.O. uptake rate will be less than 15 mg/l/hr. It is this non-steady state operation that is one key to the SBR process. The wide swings in the F:M ratio place selective pressures on the biomass.

The period when the F:M ratio and D.O. uptake rate are high is a "feast" period; food is plentiful, and the D.O. level stays near zero because the oxygen demand exceeds the aeration system's average capacity. This "feast" period inhibits slow growing obligate aerobes such as filaments, and encourages the growth of floc-forming, facultative zoogleal organisms.

The period when the F:M ratio and D.O. uptake rate are low is a "famine" period. This "famine" period is also known as endogenous respiration. This occurs at the end of React when all available food has been utilized. The "famine" period inhibits less hardy aerobic filaments, encourages the survival of good settling zoogleal and facultative organisms. The anoxic vs. aerobic selective pressures on the organisms yields a facultative biomass that forms a tighter floc and settles better than a strictly aerobic biomass. Continuous flow plants contain a mostly aerobic biomass, which often causes poor settling and bulking problems.

The two cycles which establish the selective pressures on the biomass are Anoxic Fill and true React. Siemens Water Technologies typically use 75% Anoxic Fill and 25% Aerated Fill. Equally important is a true React period with no influent and no effluent. Continuously filled systems can not provide true "React".

We maintain "Anoxic Fill and React" considerably above design flow, thus maintaining the selective pressures on the biomass. All other SBR suppliers compromise Anoxic Fill and true React at flows above design, limiting the high quality consistency of the effluent from the SBR.

Aerobic SRT or F:M / MLSS / HRT

We engineer and design the **OMNIFLO® SBR** based on an aerobic SRT or F:M basis. For a two basin SBR, our strategy calls for the aeration system to be operated for 37.5% of each cycle, at design flow. Other SBR manufacturers aerate for 50%, 60%, or even 70% of each cycle. This results in smaller aeration equipment, but severely limits or eliminates the selective pressures, demand proportional aeration, and field flexibility.

For a typical domestic plant requiring nitrification, the average F:M during the aerated period is 0.30 (starting at 0.6 and ending at 0.0). When corrected for aeration time, the aerobic design F:M will be 0.2115 (0.30 x .375). The **OMNIFLO® SBR** basin is typically designed at an MLSS concentration of 2,500 mg/l at top liquid level. This value is based on operating experience in our numerous facilities. However, it should be noted that MLSS is a control mechanism for the SBR. The MLSS range we have successfully experienced is 1000 - 8000 mg/l. Siemens designs at 2500 mg/l, which proves reliable and flexible in the field. Flexibility to adjust this value is critical. Higher design values significantly reduce the ability to store solids. Siemens design procedure yields 18 to 22 hours retention time. The decant volume is approximately one third of the total basin volume.

Nutrient Removal

Our municipal SBR facilities provide biological nutrient removal of nitrogen and phosphorus. The ID/SC manifold eliminates the need to operate mixing pumps during "Anoxic Fill". The ID/SC achieves intimate contact of the food with the biomass because raw influent is distributed evenly throughout the bottom of the tank into the settled biomass. Anoxic or Anaerobic conditions are assured in the sludge blanket allowing biological release and later removal of Phosphorus assuming the BOD:P ratio is sufficient (as shown on the graph on the following page).

Biological conversion of Ammonia to Nitrates begins during "Aerated Fill", as does conversion of Nitrates to Nitrogen gas. The denitrifying organisms will continue to be active until the residual D.O. in the basin exceeds 2.0 mg/l at which time they will use the available free oxygen. Tests have demonstrated most OMNIFLO® SBR's from Siemens will remain anoxic except for the highly aerobic jet plumes, or hold the D.O. below 2.0 mg/l, for 40 to 90 minutes after the blowers are turned on. This explains why our SBR always achieves simultaneous Nitrification and Denitrification with no special adjustments in the batch cycles.

The following chart graphically depicts this phenomena. Whether required or not, nutrient removal is provided in the OMNIFLO® SBR system for several reasons. Control of filaments is always required. The mechanism employed inherently encourages biological phosphorus removal through anaerobic phosphorus release and later in React, aerobic uptake and storage. Similarly, nitrate formation and conversion to nitrogen gas, is fostered by the same environment. As nitrification can represent over 40% of the total oxygen requirements, and therefore electrical bills, denitrification oxygen recovery can provide big dollar savings regardless of effluent requirements. With high TKN wastes or extremely tight nitrogen permits, the OMNIFLO® SBR exclusive de-nitrification step can be activated.

The Siemens Water Technologies patented "Influent Distribution/Sludge Collection Manifold" (ID/SC) introduces influent evenly across the basin floor, directly into the thickened biomass. Superfluous D.O. is absent. Influent is not diluted by mixing, making biological nutrient removal more consistent and reliable.

In the "Anoxic Mixed Fill" period used by some SBR manufacturers, floating or submerged mixers mix the raw influent with the remaining contents of the basin which includes the settled biomass. The settled biomass is diluted by the 6-8 ft. of clear supernatant remaining, which contains a residual D.O. This inhibits the anaerobic conditions necessary for nutrient removal, especially if a demand-proportional system is not utilized.

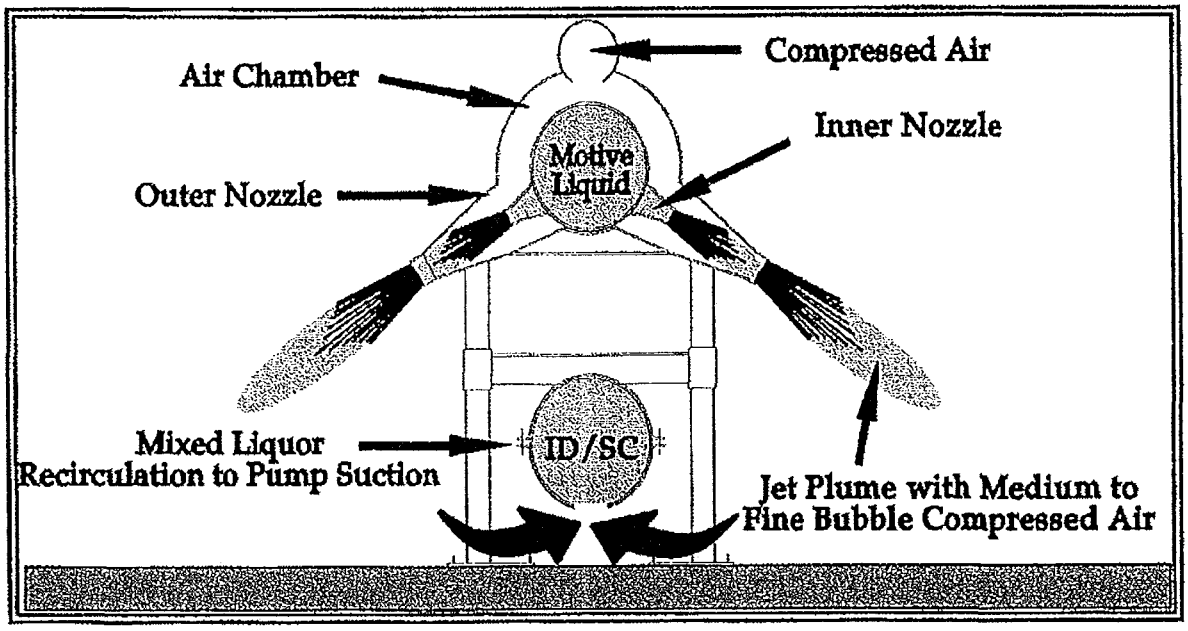

Conventional Continuous Flow Biological Nutrient Removal

The myriad of baffles, tanks, critical D.O. control requirements, pumps, pipes, recycle streams etc., are clearly expensive and maintenance intensive. These systems, while capable, have shown susceptibility to upset and are prone to filamentous bulking. Once built they are expensive and difficult to modify. Almost all variations require expensive patent licensing and royalty fees.

Consider the OMNIFLO® SBR, with no baffles, no clarifiers, one pump, and a control strategy fully automated and easily modified. The separate process environments required are provided over cycle progression times, rather than with baffles and huge recirculation pumps. Process adjustments or modifications are easily and immediately completed, at no cost, through simple selection of our operation strategy. Temporarily high MLSS values may be desired due to solids handling concerns (e.g. - press failure). Not only is this anticipated in the OMNIFLO® SBR design, but capacity can easily increase further by simply extending the Settle Time value. It is, therefore, exceedingly easy for the Operator to modify the plant operation to meet changing influent flow concentrations, quantities, or effluent quality parameters.

Kinetics

The Continuous Flow Biological Nutrient Removal design falls into two main categories: plug flow and complete mix. Advantages of plug flow over complete mix are: better settling, no short-circuiting of influent to effluent, and somewhat better kinetics. These plant however are expensive to build and susceptible to upset from peak or shock loads. Complete mix Continuous Flow BNR plants offer more stable transient response and cheaper construction (fewer baffles), but require larger basins due to short-circuiting, and are prone to filamentous bulking.

In the OMNIFLO® SBR, the whole tank receives influent as in complete mix; but the batch feed achieves the plug-flow advantage in kinetics. The OMNIFLO® SBR therefore, offers the advantages of both systems with the disadvantages of neither:

- **Simple basin construction lowers costs.**
- **Anoxic Fill/React phases enhance removal kinetics, eliminate short-circuiting and inhibit filamentous bulking.**
- **No short-circuiting reduces required basin size.**

PARAMETER COMPARISON

CONTINUOUS FLOW SYSTEMS vs SBR BIOLOGICAL NUTRIENT REMOVAL SYSTEMS

CONTINUOUS FLOW	SBR
REQUIRES MANY TANKS AND NUMEROUS BAFFLES	ALL PROCESSING IN ONE TANK, NO BAFFLES
REQUIRES LARGE INTERNAL RECYCLE PUMPS (2-4Q)	INHERENT 4Q RECYCLE - NO PUMPS REQUIRED
REQUIRES CLARIFIERS	NO CLARIFIERS, PERFECT QUIESCENT SETTLING
FREQUENT SLUDGE BULKING REPORTED	EXCELLENT FILAMENTOUS BULKING CONTROL
REQUIRES RETURN SLUDGE PUMPS	NO RAS PUMPING SYSTEM
EXTENSIVE YARD PIPING	TIMED PROCESS STEPS ARE EASILY ADJUSTED
ONCE BUILT, BAFFLES CAN NOT BE MOVED TO IMPROVE THE PROCESS EFFICIENCY	INHERENT FLOW EQUALIZATION
	LESS CONCRETE
	COMPUTER CONTROLS PROVIDE SIMPLER OPERATION

SIEMENS

OMNIFLO® SBR OPERATING STRATEGY

Great care has been taken on the previous pages to detail the selective pressures critical to efficient and consistent performance of the SBR system. In order to optimize the process features of the SBR, a control strategy which adjusts to maintain adequate aeration, perfect settling, critical selective pressures, (anoxic vs. aerobic, feast vs. famine), and nutrient removal conditions is very important.

Siemens Water Technologies has developed an operating strategy for municipal plants which optimizes the process features at storm flows up to 3.5 times design flow. The OMNIFLO® SBR system is based on the flow rate into the SBR. A submersible pressure transducer in each basin continuously reads the basin level. Based on the rise rate, the computer can calculate the flow rate, and make continuous adjustment to the cycles to optimize the process features.

Optionally, we offer a strategy which is based on continuous dissolved oxygen (D.O.) readings in each basin. This system is more precise than the flow based system. The D.O. system is more expensive due to the high cost of reliable probes, but is desirable for industrial applications with variable organic loading.

The OMNIFLO® SBR operating strategy adjusts aeration based on hydraulic flow rates. At low flows, aeration is reduced. This not only provides major (up to 50%) power savings, but is critical to process performance. Over aeration can deteriorate effluent quality and can prohibit the biomass from reaching the necessary anoxic or anaerobic conditions.

As flows increase above design, the OMNIFLO® SBR system strategy increases aeration to accommodate higher organic loadings. Siemens Water Technologies is the only system supplier to offer this flow proportional aeration strategy. All other equipment suppliers provide a strategy which over-aerates at low flows and under-aerates at high flows. Siemens paces aeration exactly as a function of oxygen demand.

TYPICAL LEVEL CONTROL SENSOR ARRANGEMENT

ONE ASSEMBLY PER BASIN

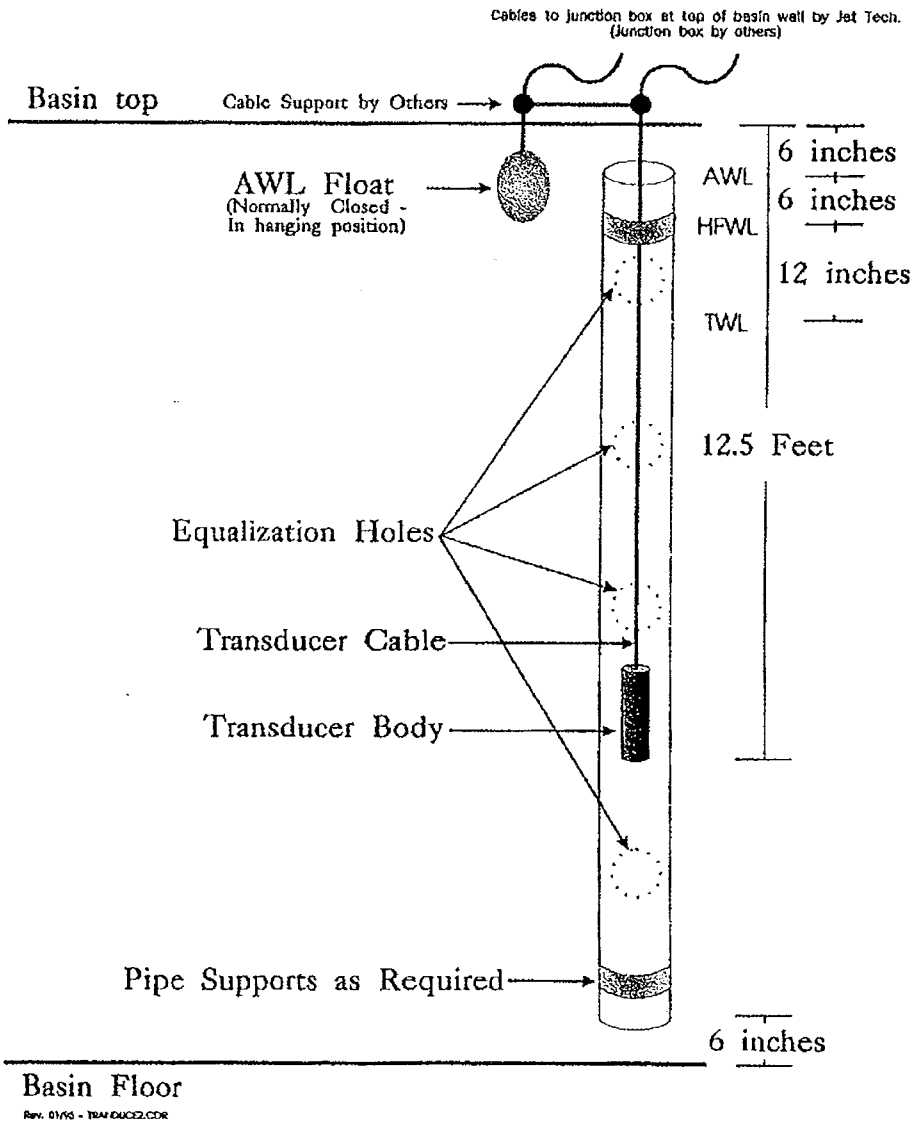

Rev. 01/95 - TRANDUCE2.CDR

Anoxic Fill is never sacrificed in the OMNIFLO® SBR system at flows up to 3.5 times design. This is critical for organism selection, the development of the "feast" stress and nutrient removal.

True React (no influent, no effluent) is never sacrificed in the OMNIFLO® SBR municipal systems which is critical for organism selection, development of the famine stress, and therefore effluent quality.

Siemens is the only system supplier to offer this peak handling capability, while still achieving desired process results. All other suppliers reduce or eliminate Anoxic Fill. They reduce aeration as flows increase. Many reduce or eliminate true React and Perfect Settle at high flows.

The high-flow **OMNIFLO® SBR** control proportional aeration strategy is extended through the optional Filled/Decant step. This is a combination of Anoxic Fill and Decant and is used only at peak flow conditions or in single tank operation. Influent enters the basin through the ID/SC manifold and exits the manifold at less than 0.5 fps directed at the floor of the reactor. This will not "kick up" the sludge blanket and, thus, allows treated effluent to be withdrawn through the decanter while influent is being slowly introduced at the basin floor. Varying flows in closed systems (industrial and some developments) are also handled efficiently, but the strategy is altered because many of these plants do not receive wastewater on a 24 hour basis and because rainwater infiltration is not a factor, the BOD loading is usually heavier at high flows.

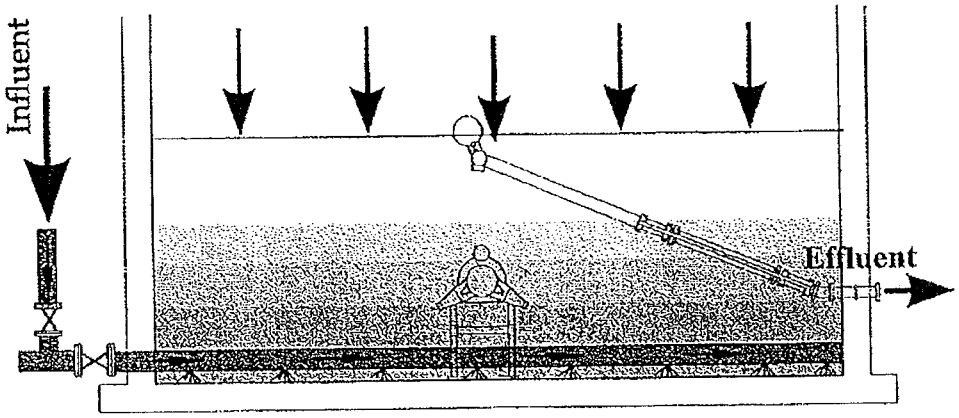

FILLED DECANT

OMNIFLO® SBR CYCLE TIME DISTRIBUTION CHART
SAMPLE DESIGN - 2 BASIN SBR

The following chart shows the **OMNIFLO® SBR** cycle time distribution depicting operating strategies for flows ranging from 0 to 350% of design flow conditions as discussed on the previous pages. This chart can easily be modified to accommodate specific project requirements.

Siemens Water Technologies is the only manufacturer to offer this process optimized strategy.

Total Cycle 360 Basins 2		All Time In Minutes		TWL 18.0 ft. (typ.) BWL 12.0 ft. (typ.) Max Q 5.2 times design						
% of Design Q	BWL to TWL Fill Time	Anoxic Fill	Aer. Fill	React	Settle	Decant	Filled Decant	Idle	Aer %	Cycle Time
0.00	180	162	18	59	45	0	0	76	0.21	360
0.30	180	162	18	59	45	9	0	67	0.21	360
0.40	180	162	18	59	45	13	0	64	0.21	360
0.50	**180**	**162**	**18**	**59**	**45**	**16**	**0**	**60**	**0.21**	**360**
0.60	180	162	18	62	45	19	0	54	0.22	360
0.70	180	154	26	68	45	22	0	46	0.26	360
0.80	180	146	34	73	45	25	0	37	0.30	360
0.90	180	139	41	79	45	28	0	28	0.33	360
1.00	**180**	**135**	**45**	**89**	**45**	**31**	**0**	**15**	**0.37**	**360**
1.10	180	122	58	89	45	34	0	12	0.41	360
1.20	172	101	72	82	45	36	0	9	0.45	345
1.30	159	79	80	74	45	36	0	4	0.48	318
1.50	**138**	**53**	**85**	**53**	**45**	**36**	**0**	**4**	**0.50**	**276**
1.75	118	39	79	41	45	34	2	0	0.50	241
2.00	103	29	74	39	45	29	10	0	0.50	226
2.25	92	22	70	40	45	25	18	0	0.50	219
2.50	83	17	66	43	45	21	26	0	0.50	218
2.75	75	13	62	49	45	17	36	0	0.50	222
3.00	69	10	59	56	45	14	46	0	0.50	230
3.25	64	6	58	59	45	13	53	0	0.50	233
3.50	**59**	**3**	**56**	**65**	**45**	**11**	**62**	**0**	**0.50**	**243**

EQUIPMENT DESCRIPTION

Jet Aeration Equipment

Jets are ideally suited for use in SBR applications because of their ability to operate efficiently, from both a power and maintenance standpoint, in high F:M environments, and their unique ability to mix independent of aeration. Engineers and owners often have pre-determined preferences regarding selection of aeration equipment. Siemens Water Technologies offers both coarse and fine bubble SBR systems. However, we strongly recommend jet aeration for high efficiency.

A basic understanding of jet aeration equipment is necessary to fully evaluate the **OMNIFLO® SBR** system from Siemens. The mixed liquor is pulled from the basin through the ID/SC manifold by the pump and recirculated through the inner jet nozzle; this recirculated liquid is referred to as "motive" liquid. Compressed air flows through the smaller top pipe then down the air chamber where it is combined with the motive liquid and sheared into medium to fine bubbles. The liquid air mixture is discharged as a high energy plume into the basin. Please refer to the Jet Aeration section of this manual for more detail.

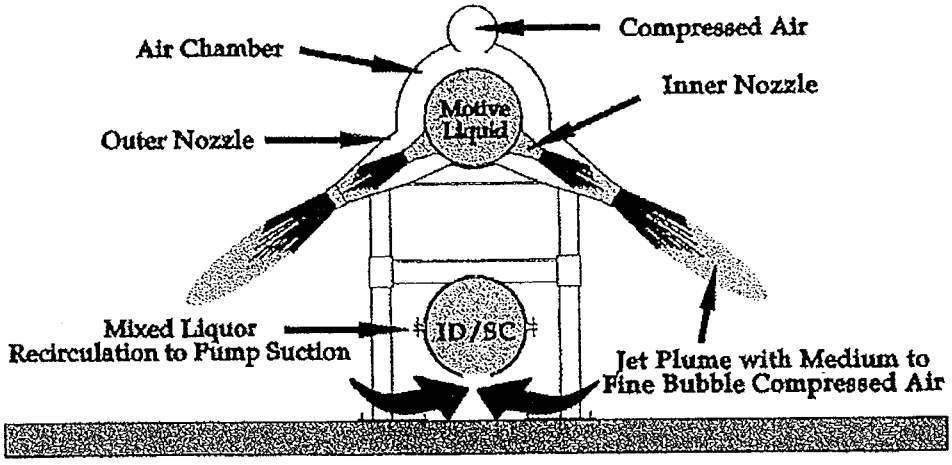

Jet Aeration

Influent Distribution / Sludge Collection Manifold (ID/SC)

The Distribution Manifold gently distributes the influent wastewater, across the basin floor, throughout the length of the basin. The manifold is designed for a maximum exit velocity of 0.5 fps so the sludge blanket is not disturbed at peak flow conditions. During "Aerated Fill" and "React", mixed liquor is drawn back into the manifold and recirculated as motive liquid for the jet aerators. By insuring that the motive liquid is collected uniformly across the basin, the ID/SC manifold helps maintain the "complete mix" characteristics of the OMNIFLO® SBR process.

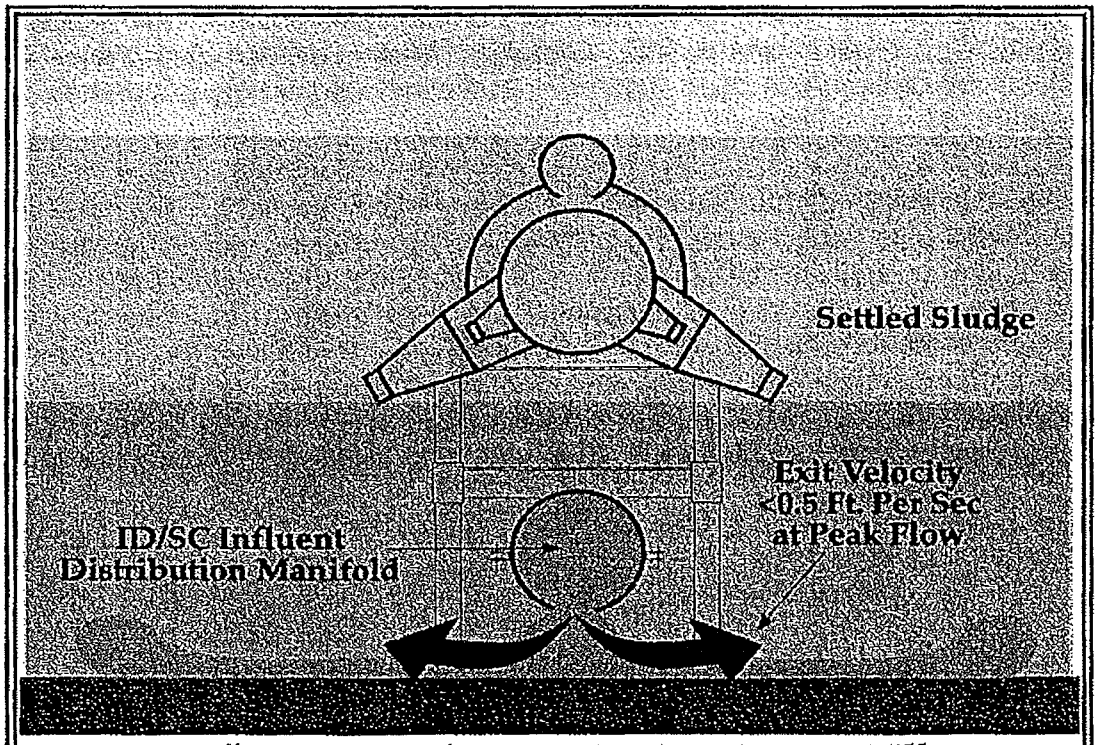

Influent Distribution During Anoxic Fill

One of the most important functions of the ID/SC manifold, from a process standpoint, is that it makes a "Filled Decant" period practical in emergency single-tank operation or at peak flow rates. The optional "Filled Decant" period allows the effluent to "Decant" after "Settle" while introducing influent through the ID/SC into the settled biomass.

The introduction of influent while decanting allows the "Anoxic Fill" period to begin for the next batch. This allows the **OMNIFLO®** SBR system to maintain

the very important Anoxic Fill period even during high peak flow rates or in single-tank operation.

Note: SBR manufacturers using a simple float and timer based system eliminate the "Anoxic Fill" period at peak flow rates. They also eliminate their "React" period by replacing "React" with "Aerated Fill" at peak flow rates. Continued or repeated operation in this mode adversely affects the "feast/famine" selective pressures on the biomass, and can result in poor effluent quality and loss of nutrient removal.

OMNIFLO® SBR Process Piping

A section view of the patented OMNIFLO® SBR process piping system from Siemens is shown below. The overview drawings on the following pages show the OMNIFLO® SBR piping, pump and valve arrangement during Normal Operation and portray how the cross-over piping and valves allow the motive liquid pump to clean the jets during the VACFLUSH® Cleaning Operation. By simply closing two valves, and opening two valves, the pump suction and discharge connections are reversed, allowing the pump to take suction in a reverse direction through the jet aerators, removing any fouling materials. The backwash liquid typically is returned to the basin; or can be sent directly to the digester. The unique VACFLUSH® cleaning system insures years of optimum operation, and has been extensively field-proven.

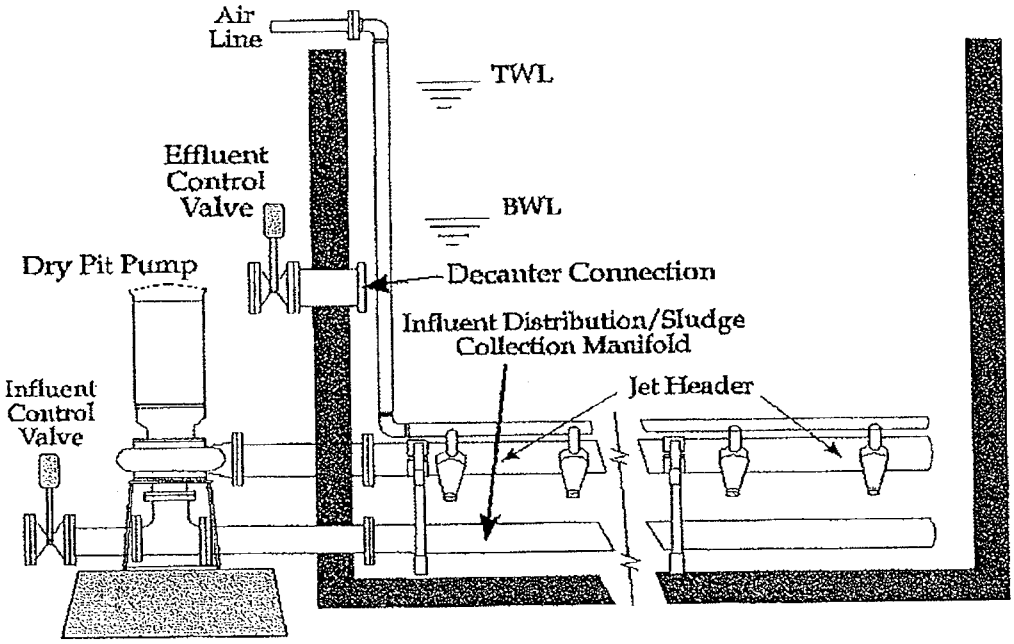

Omniflo® SBR with Dry Pit Pump

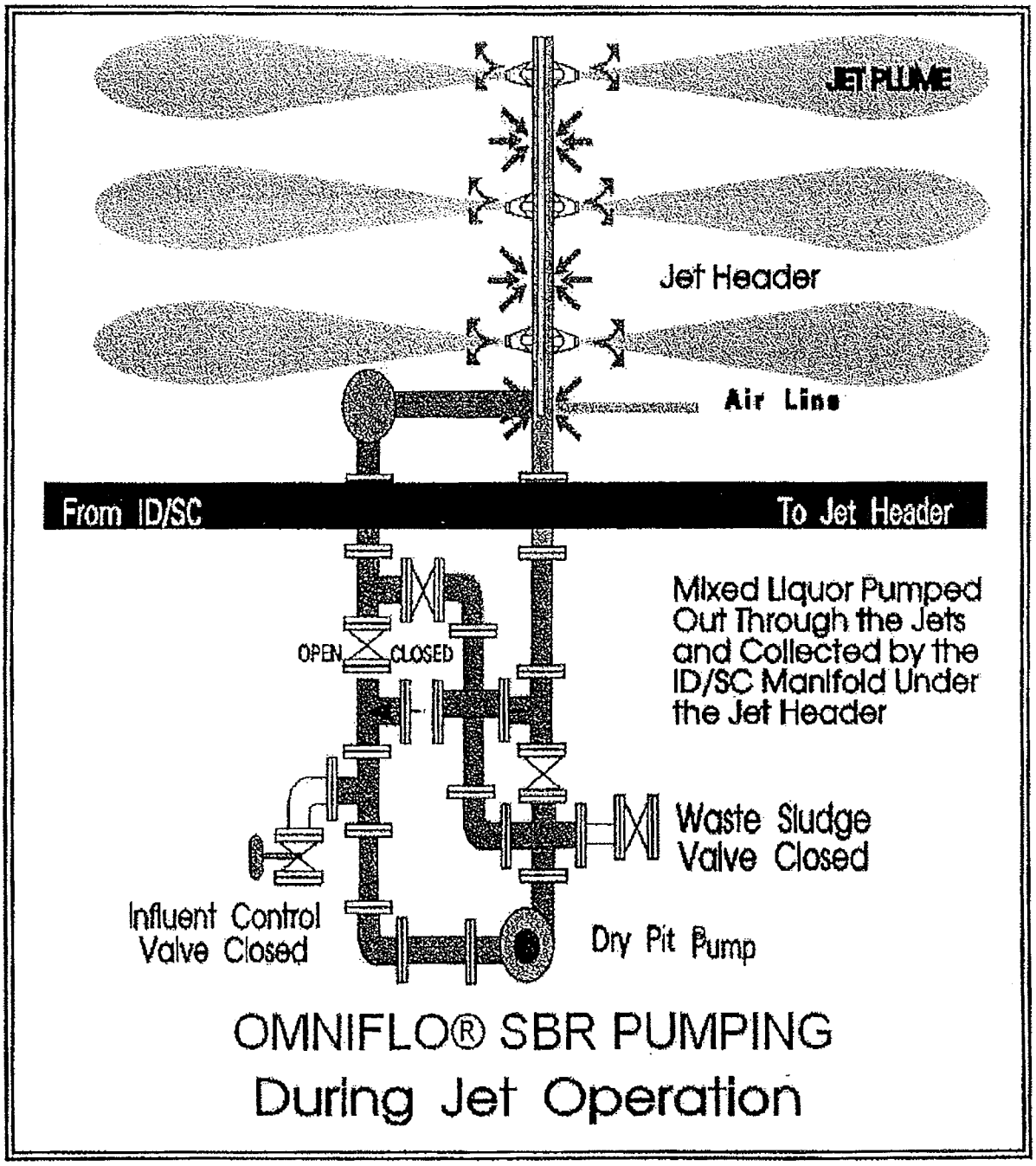

OMNIFLO® SBR PUMPING
During Jet Operation

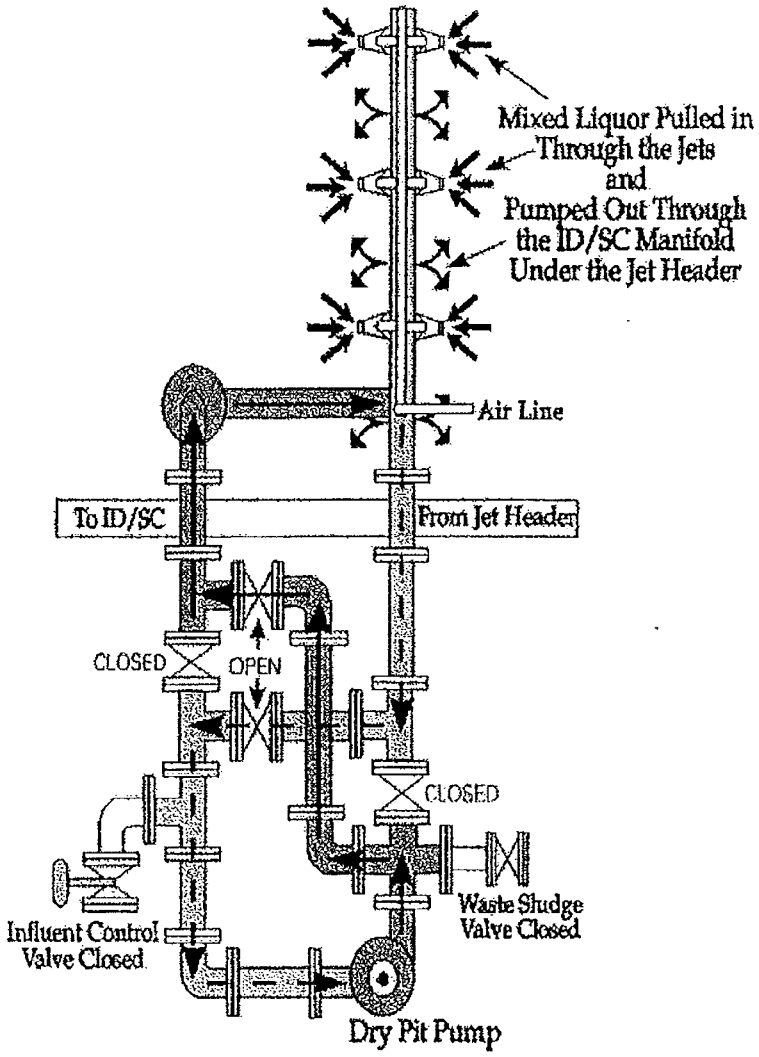

OMNIFLO® SBR PUMPING

During Jet Vacflush® Cleaning Operation

Pump Column Piping System

On large projects, (typically >1 MGD) the **OMNIFLO®** SBR process piping can be replaced by the pump column piping system, for smaller space requirements and lower overall capital costs. The pump column piping system includes a submersible propeller pump mounted in a pump column, a jet header, and an ID/SC Manifold to distribute the influent and collect the waste sludge. The jet headers are cleaned by operating the pump in a reverse direction and pulling mixed liquor back through the jets to dislodge any material. In the pump column piping system, sludge is typically wasted through a separate pump that is connected to the ID/SC Manifold.

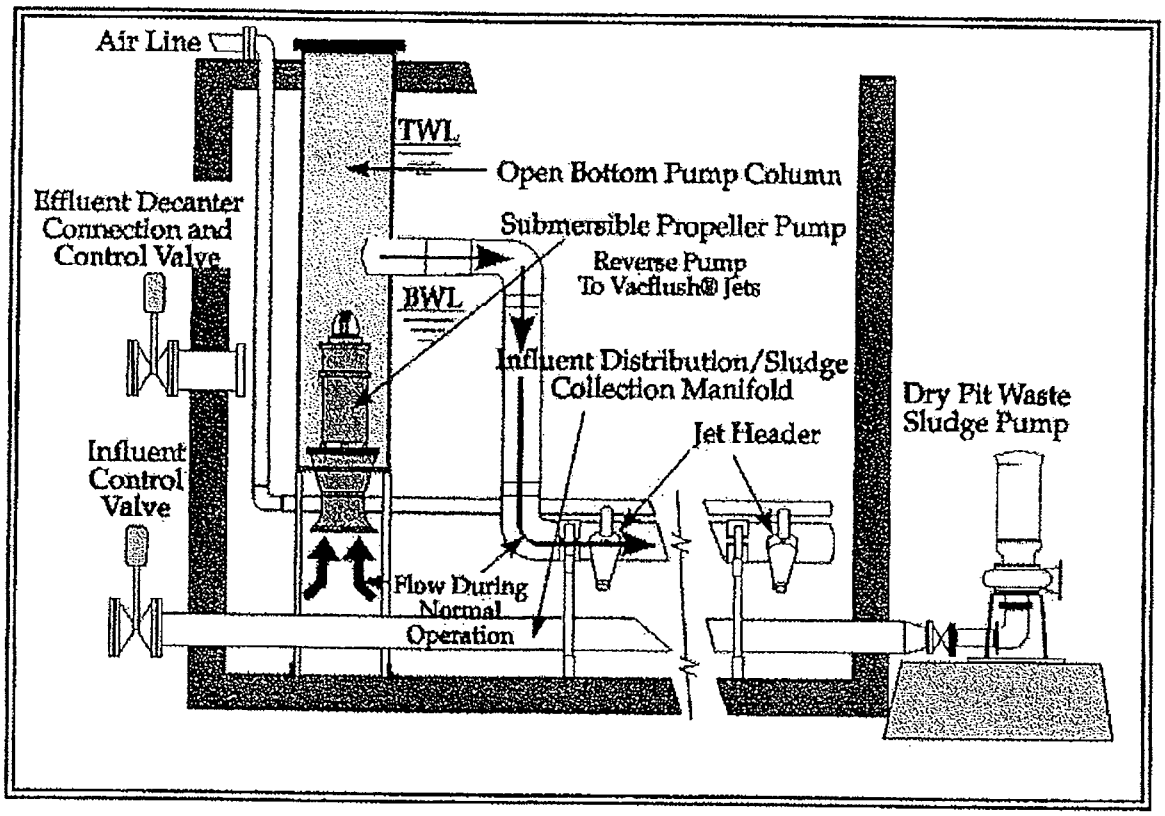

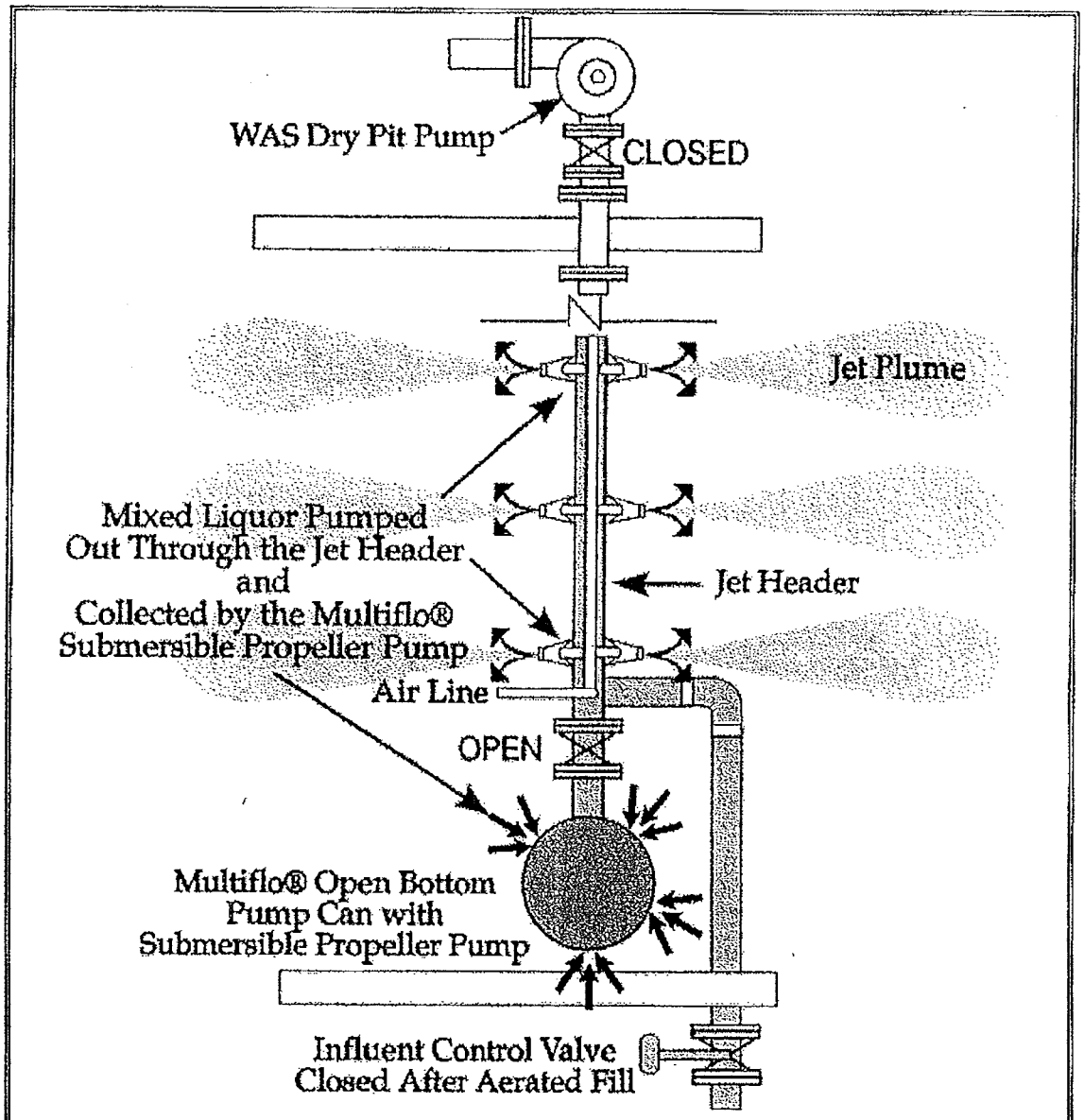

Piping with Normal Jet Operation

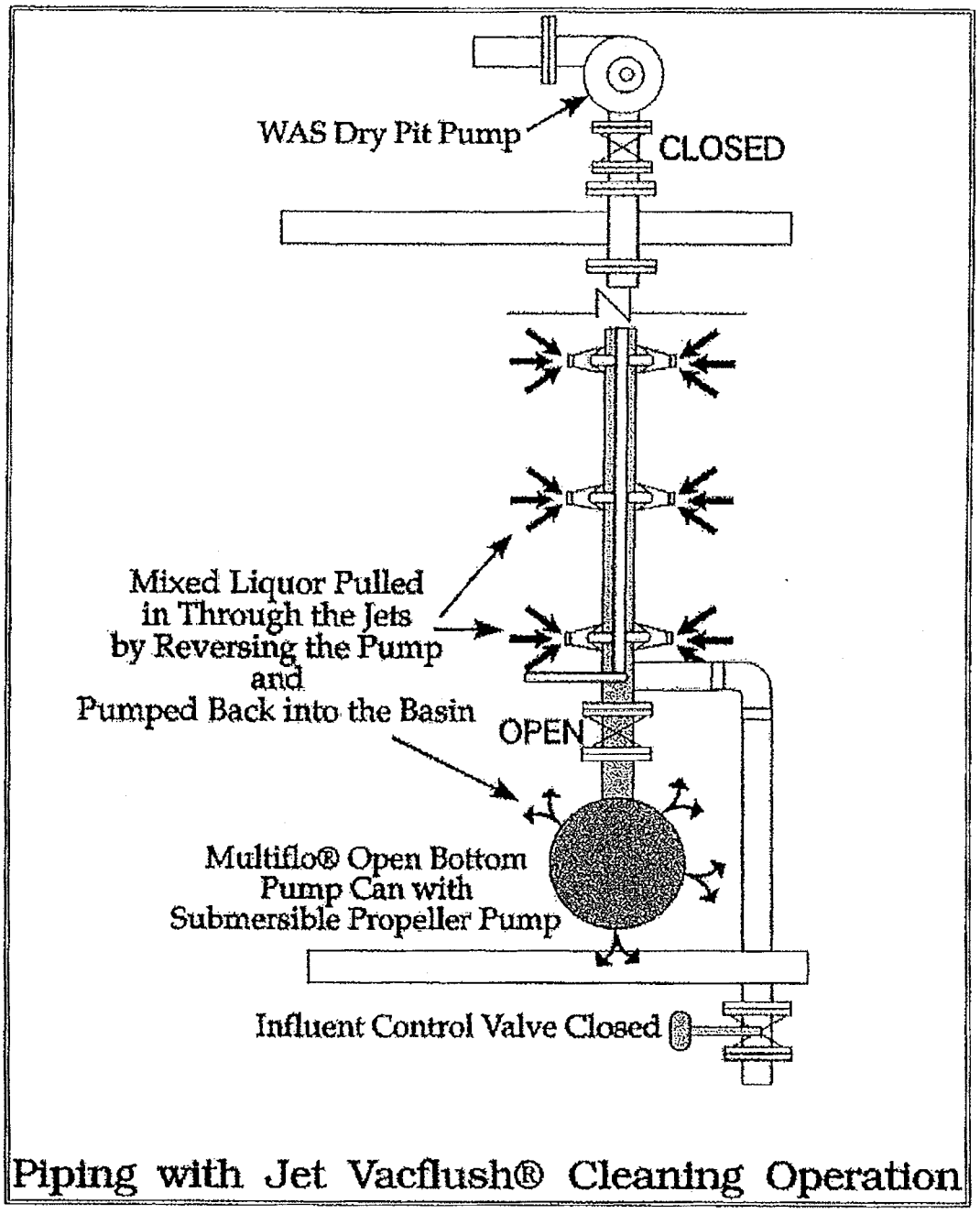

Piping with Jet Vacflush® Cleaning Operation

SBR Sludge Wasting

Typically, the problem of sludge wasting from an SBR has been addressed by utilizing a submersible pump. The pump is usually mounted in the corner of each basin and is operated for a short period during the Idle period of the operating cycle. The problem with such systems is that settled sludge tends to "rat-hole". The submersible pump sucks a hole in the sludge blanket, and the majority of the wasted liquid is water. Or as many do, the wasting is completed during Aeration, with mixed liquor, increasing the volume of sludge that must be handled. Such a system increases the maintenance requirements by adding an additional pump to each basin, and volume to the sludge handling requirements.

The Siemens approach provides a more efficient, cost-effective sludge wasting system. **Our design strategy eliminates the need for dedicated waste sludge pumps.**

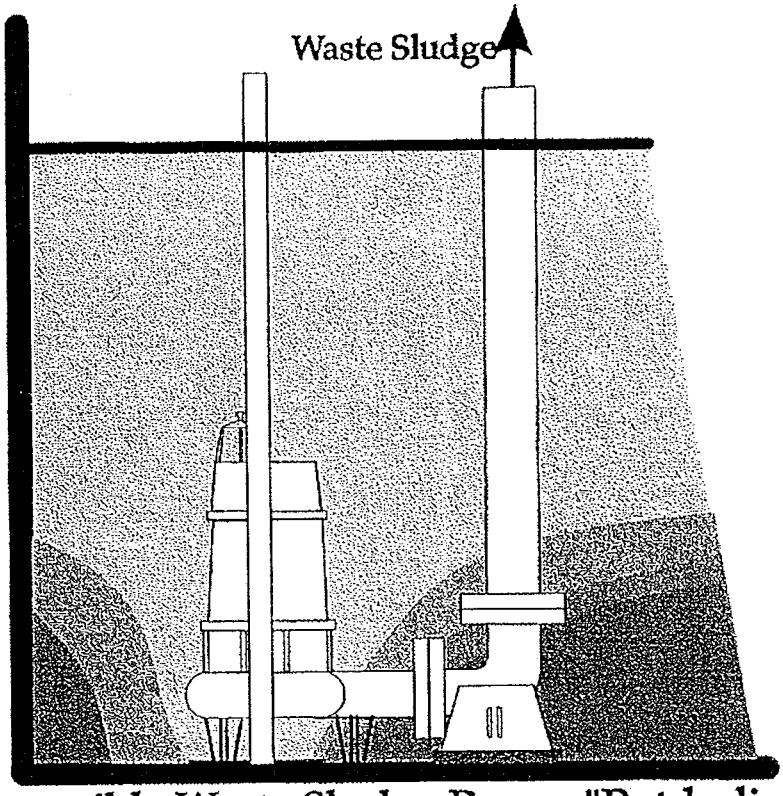

Submersible Waste Sludge Pump "Rat-holing" Effect

The **OMNIFLO® SBR** system design solves the problem of wasting sludge by utilizing the ID/SC Manifold for sludge collection. The manifold for both our SBR and pump column piping systems is fiberglass pipe with hydraulically balanced orifices spaced along its bottom. The spacing of the orifices insures that **sludge is collected uniformly from multiple points across the basin floor**. The manifold is usually mounted directly beneath the jet aeration header about 8 inches above the basin floor. In addition to insuring that wasted sludge is of consistent quality (usually greater than 1% solids), the ID/SC manifold and process piping for the **OMNIFLO® SBR** system allows the motive liquid pumps to also serve as waste sludge pumps. This is accomplished by simply closing the discharge valve to the jet header and opening the waste sludge valve to the digester, thus eliminating the need for dedicated waste sludge pumps. The pump column piping system utilizes a dry pit waste sludge pump connected to the ID/SC, to collect the waste sludge.

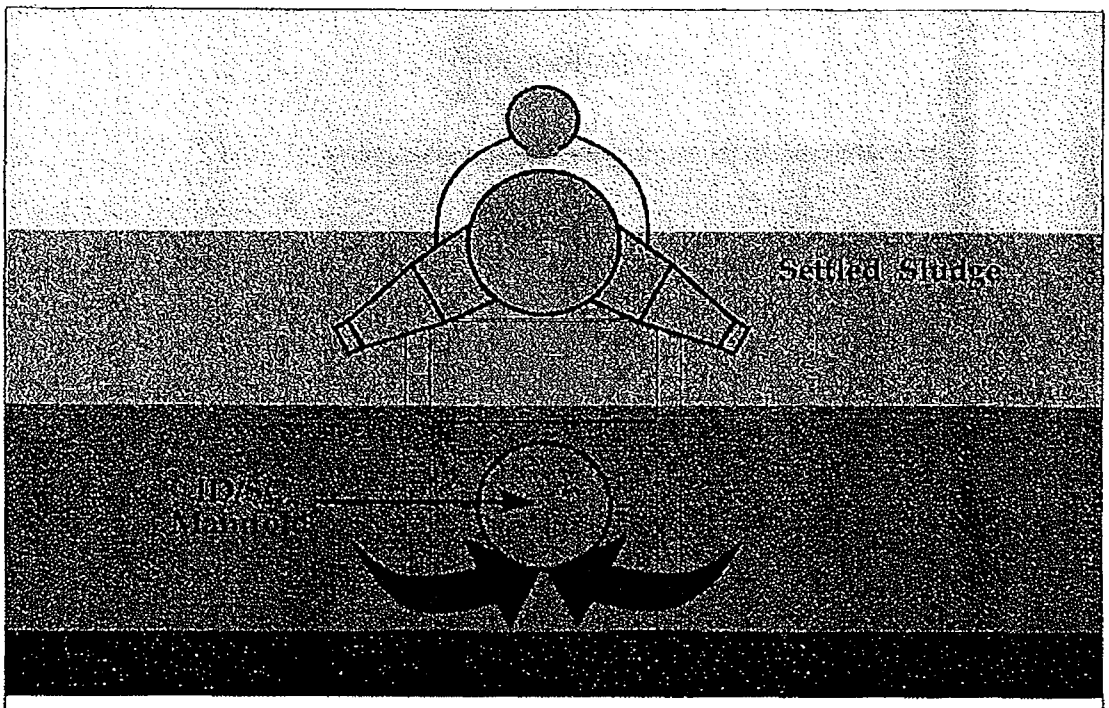

"Sludge Collection" Manifold During Sludge Wasting

Decanter

The decanters used in early SBR's were basically pipes with drilled holes along the bottom or side. During the React and Settle periods solids entered the decanter, causing the first half-minute to one minute of Decant to contain solids.

In the past several years, all SBR manufacturers have developed "solids excluding" decanters. There are currently four types of "solids excluding" decanters:

- ☞ Those that are fixed and air filled except during the Decant period.
- ☞ Those that are physically removed from the mixed liquor except during "Decant".
- ☞ Those that are mechanically closed, when not in use, by a hydraulic or electric motor.
- ☞ Those that incorporate a spring loaded solids excluding valve that is opened by hydraulic differential during "Decant" **(Siemens Water Technologies).**

The Siemens floating decanter uses a **Spring Loaded Solids Excluding Valve** which is actuated by static head differential upon the opening of a valve located outside the basin. **There are no electro-mechanical parts in the basin.** The floating decanter allows reduced Settle periods since the Decant period can begin when the sludge blanket is approximately four feet below the surface level. The fixed decanter provided by others requires that the sludge blanket be approximately eight feet below the surface before the Decant period can begin. That requires longer Settle time, and therefore, larger basins and higher costs.

The Settle period for a floating decanter is approximately 30 to 45 minutes; the Settle period for a fixed decanter should be a minimum of one hour. The Siemens decanter requires a minimum head of 3' between the bottom level and the discharge point of the decanted effluent. The drawtube on our decanter is at least 18" beneath the surface to avoid entraining floating objects, scum or foam, in the effluent. Decanters which are removed from the basin and lowered back in during Decant entrain floating objects and scum each cycle. Frozen scum can damage these units.

The automatic actuating valve in the Siemens Decanter is safely located outside the basin in a warm, dry, place. Therefore, it is **easily maintained and adjusted.** A simple manual override is provided. Decanters which utilize motorized actuators on in-basin mechanisms are shorter-lived, due to the environment, and are extremely difficult and dangerous to service in the event of failure. Further, available designs have no manual override. Clearly, the accessible, reliable Siemens Decanter is far more safe and efficient.

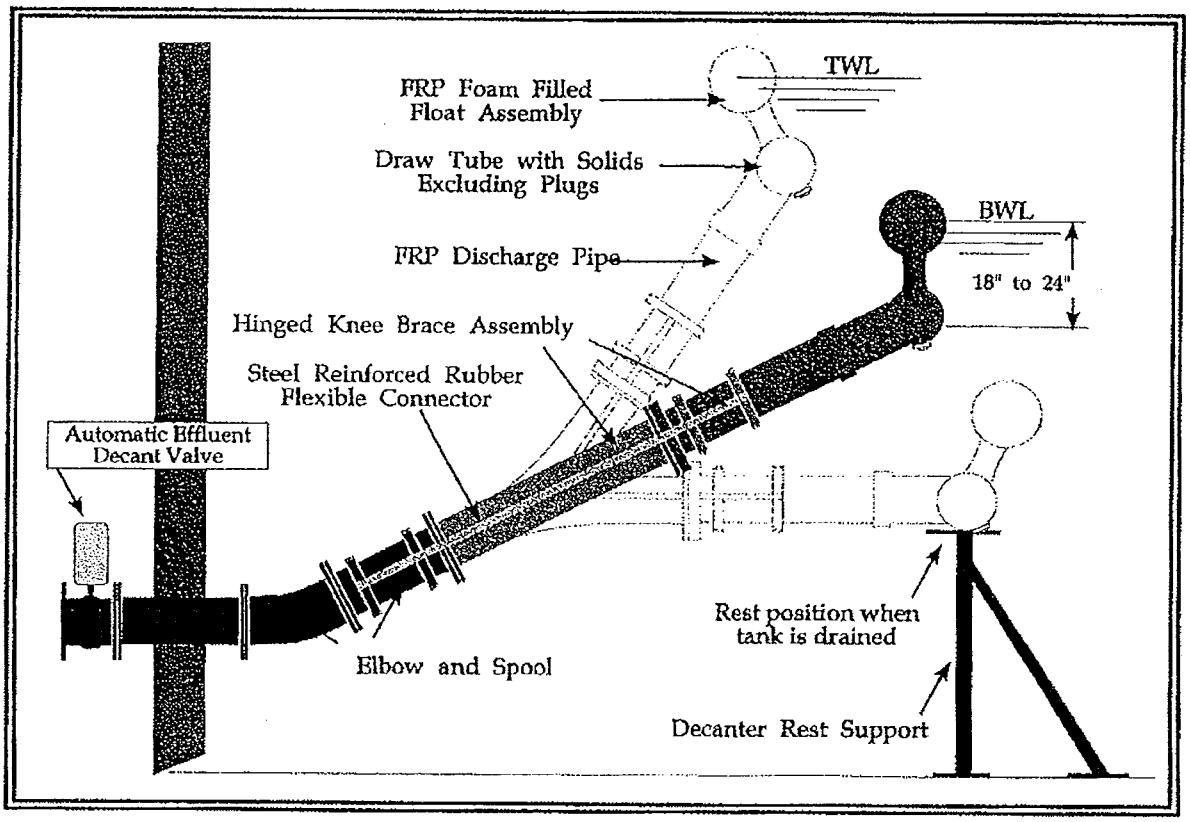

Floating Solids Excluding Decanter

Fine & Coarse Bubble SBR Design

Siemens Water Technologies has both fine and coarse bubble SBR installations with fixed and retrievable diffuser assemblies available. Siemens offers fine and coarse bubble SBR design as alternatives to its recommended and preferred jet aeration design. Before reading further, please review the SBR discussion of Aeration Equipment Comparisons in the Equipment Section of the manual.

Our controls are used with fine and coarse bubble SBR designs. Influent distribution, sludge wasting and the effluent decanter are Siemens standard equipment. The influent distribution and sludge collection manifold (ID/SC) evenly distributes the influent across the basin floor and likewise collects the waste sludge from multiple points in the basin. A dry pit or submersible pump can be used to pump the waste sludge through the ID/SC manifold. The decanter is a Siemens solids excluding floating decanter as described in the Decanter Section.

The most important thing to understand is that a fine membrane diffuser requires frequent cleaning when used in high F:M environments in conjunction with low dissolved oxygen (anoxic) conditions. High F:M and low D.O. conditions are ideal for slime buildup on the membrane of the diffuser. Of course, high F:M and low D.O. conditions are experienced in SBR's during the "Anoxic Fill" cycle and during the beginning of the "Aerated Fill" cycle. Membrane diffusers must be routinely steam or chemically cleaned to remove the slime buildup. Often it is easier and less expensive to replace the membranes. Retrievable diffuser banks are recommended in 2 basin SBR's to avoid taking a tank out of service to clean the diffusers. In 3 or 4 basin multi-tank SBR's, one may choose to take a basin out of service for cleaning and use fixed membrane diffusers.

Most fine and coarse bubble designs used in SBR's require some sort of mixing device to achieve complete mix in the basin during aeration. Usually the mixing device is a floating down draft mixer. Siemens designs SBR's without a mixing device when the density of the diffusers achieves full floor coverage and the ID/SC is used to distribute the influent evenly across the basin floor. Siemens believe it is very important to pay close attention to how the Standard Oxygen Requirement (SOR) is calculated from the Actual Oxygen Requirement (AOR), with special emphasis on the Alpha value used. It is also very important to use the Oxygen Transfer Efficiency (OTE) supplied by the diffuser manufacturer. One SBR manufacturer has made unsubstantiated claims that the floating down draft mixers actually increase

the Alpha value, thus, reducing the SOR requirements. They have also increased the OTE of the diffuser above that recommended by the diffuser manufacturer. They base this on an undocumented belief that the mixer increases the residence time of the oxygen bubbles, therefore, enhancing the oxygen transfer efficiency of the diffuser. Siemens doesn't believe that either the Alpha value or OTE should be increased because of the down draft mixer.

OMNIFLO® SBR Controls

Introduction

The heart of the SBR system is the control system. The design of the OMNIFLO® SBR system focuses on an operating strategy to optimize the SBR process capabilities while minimizing required operator time and decision making. At the same time, valuable tools are provided to assist operators in monitoring and troubleshooting the SBR system.

The operating strategy optimizes the SBR process features by controlling the selective pressures placed on the biomass. The hydraulic and organic loading varies widely in most facilities. The control system adjusts to these changing conditions to provide consistent, high quality effluent; including nitrogen and phosphorus removal.

We offer three types of control systems that cover a wide range of treatment objectives, applications, and client preference. For more detailed information, please contact our Applications Engineering Department located in Edwardsville, Kansas.

OMNIFLO® SBR Flow Proportional Control System

Our state of the art controls feature a flow proportional control strategy including failure response. This control system features a PLC working in cooperation with a single board computer. This combination allows the Siemens group to offer an extensive variety of control and SCADA options. Options can be selected based on specific project requirements.

Each **OMNIFLO® SBR** Flow Proportional Control System must complete an extensive operational and functional test program prior to shipment. Standard features of the control system (unless otherwise specified), include a panel mounted operator interface, modem for remote access of the PLC for troubleshooting and operator assistance, and a printer for event logging of operational data. The Flow Proportional Control System can alarm and/or respond to a variety of equipment and process parameters. The PLC/Co-Processor combination continuously performs internal flow calculations based on the current influent flow conditions and adjusts preset parameters providing optimum process performance. Additional instrumentation and control options such as dissolved oxygen (DO), pH, temperature and ORP can be added to the control strategy.

These features ensure optimal treatment for variations in organic loadings as well as a wide range of influent flow conditions to meet today's effluent requirements.

The **OMNIFLO® SBR** Flow Proportional Control System from Siemens is the most powerful control strategy available. By integrating advanced SCADA software and computer systems with the SBR controls, we can offer advanced SBR controls, or alternatively complete plant wide systems, including automated plant graphics, event documentation, remote monitoring and troubleshooting. While the Flow Proportional Control System offers a vast array of options, we strive to maintain an extremely flexible control system structured for ease of use by operators at all levels.

Float And Timer Based Control System

We offer a basic PLC control strategy based primarily on predetermined cycle times with level/float switch override. This system utilizes a simplified version of the Flow Proportional Control strategy. While not including as many automated functions as the Flow Proportional System, the Float and Timer based control system does not sacrifice any of our standard process control parameters. This system does include our panel mounted operator interface, which allows the operator access to all process setpoints. Included is a modem for remote access and troubleshooting. Additionally, optional equipment can be incorporated into the system such as an event printer, a PC computer (SCADA system) with automated graphics, and/or optional control instrumentation, i.e. dissolved oxygen (DO), etc.

Slug Feed Control System

Our Slug Feed Control System is applicable for treatment plants which have adequate influent holding capacity (influent equalization basin) prior to the SBRs. This is also a PLC based control system. Hardware and software features include our panel mounted operator interface and a modem for the remote access troubleshooting. The batch feed control strategy utilizes an influent holding tank for influent equalization and batch feeding to the SBRs. The system will operate in automatic mode, and the operator is allowed to select specific cycle times for each of the treatment steps. As with all of our OMNIFLO® SBR control systems additional options may be added, such as an event printer, PC computer with automated plant graphics, or additional control instrumentation, i.e. Dissolved Oxygen (DO), etc.

Control System Features

The following are some of the features included in the **OMNIFLO® SBR Flow Proportional Computer System.** The control software is tested extensively for each application to assure quality and reliability. Siemens Control Systems are engineered and designed for consistent process performance, using state-of-the-art technology.

- **OMNIFLO® SBR controls reduce operator time.**
- **Consistent, efficient process performance.**
- **Continuous liquid level indication.**
- **Equipment failure alarms and automated response to prevent inappropriate discharges.**
- **Event logging and/or event printing.**
- **Graphics - plant monitoring and operation.**
- **Power protection.**
- **Wiring is color coded for easy maintenance and trouble-shooting.**
- **Phone modem for remote process service capability.**
- **Flexibility for operator to change set points.**

Optional Features Available With The Enhanced Control Graphics Systems With Optional PC Supervisory Control and Data Acquistion (SCADA)

- Event log history is stored, allowing review of past operation and valuable documentation.
- Control system can be monitored with some control, from a remote PC via optional software.
- Operator can work on spreadsheets, word processor or other software while treatment process continues to run.
- System expandable up to 16 tanks (Flow Proportional).
- Multiple color graphics screens for viewing plant status.
- High end PC and monitor.
- Multiple graphics software options available.
- Data highway, Modbus, Device Net, and Control Net compatible.
- Communications with fiber optics also available.

OMNIFLO® SBR Control System: Features Discussion

Flow Proportional Aeration:

The **OMNIFLO® SBR** aeration strategy adjusts the aeration in response to oxygen demands, and is calculated by setting aeration relative to hydraulic flow. Continuous indicating liquid level transducers in each SBR basin allow the system to calculate influent flow rates. This **OMNIFLO® SBR** strategy provides "flow proportional" aeration, since BOD is fairly consistent up to about 150% of average flow rate. The software allows the system to adjust the aeration power supply to the plant hydraulics with utilization of the D.O. option. Further optimization can be achieved, as the system adjusts aeration to the process oxygen demand. This minimizes power bills and stabilizes process operation, as flow rates typically vary widely in municipal plants.

Continuous Indicating Liquid Level Transducers:

These devices allow continuous monitoring of the tank liquid level by the control panel:

- Units are of stainless steel and require very little maintenance.
- Units add capability to indicate liquid level on the panel or computer screen; and allow flow control of the SBR.

Equipment Failure and Alarm Response:

The system provides automatic alarm and failure response. For example, if an influent valve fails to open, the influent pump station would be pumping against a closed valve. This control feature would place the affected tank out of service and divert the flow to another in-service basin until the failure is manually acknowledged and corrected. The controls then adjust the operating strategy and setpoints to provide optimal treatment with the remaining tanks. The failure event, alarm, and corrective actions are logged and printed.

This capability was introduced in the mid 1980's, and continues to incorporate refined technologies, software and hardware, for optimum performance. No other SBR manufacturer provides a failure response system of this nature.

Event Recording:

The system records the time and nature of each status change. These events are printed as they occur if the event printer (optional) is available. Items recorded and identified include; liquid levels, process / treatment step and step timese, failure alarms, and calculated flow rate. This record provides a valuable maintenance guide and allows the operator or Siemens technician to review plant operations during upsets or periods of unattended operation. Remote monitoring and support capability are achieved through a modem. A printer can be provided to allow the operator to maintain history if desired.

Control Panel Power Protection: (UPS OPTION)

It is assumed that the owner will provide steady, clean power to the plant. As a safeguard, Siemens provides lightning arrestors and transient voltage suppression. The control system may include an optional UPS to minimize the potential need for a rebooting of the system, when power outages are of a short duration, i.e. 60 minutes or less. A seamless reboot which allows the process to continue from where it was interrupted rather than starting the process over without regard to the state in which it was operating at shut down is part of the operational strategy without a UPS. If the outage lasts longer than 60 minutes, the flow proportional system will reconfigure the process and reboot at the optimum stage.

D.O. Proportional Aeration: (OPTIONAL)

We can employ a DO control system for applications with wide variations in organic loading. This not only **saves power** at low loads, but also helps to ensure optimal treatment at a wide range of flows. The system utilizes high quality D.O. probes to monitor the Dissolved Oxygen in the basin in conjunction with influent flow rate calculations to determine appropriate aeration cycle duration.

Multi-Task: (OPTIONAL)

Multi-tasking capabilities are built into a distributed control or SCADA system with an optional PC operator interface. Levels of security are typically provided to allow supervision and control of the multi-tasking capabilities. With the proper password(s), the operator can use an optional spreadsheet, word processor or other approved software on the PC while the SBR process is running in the background.

Graphics:

The Flow Proportional System includes a lighted operator interface or Man Machine Interface (MMI) with keypad, for equipment and process status located on the main control panel door. A wide array of state-of-the-art graphics technologies can be provided as remote options. Generally, optional graphics will include an overall SBR layout depicting mechanical equipment as well as graphical depiction of equipment operating status and alarm history. Setpoints are also made available on the enhanced graphics screens.

Panel Mounted Operator Interface

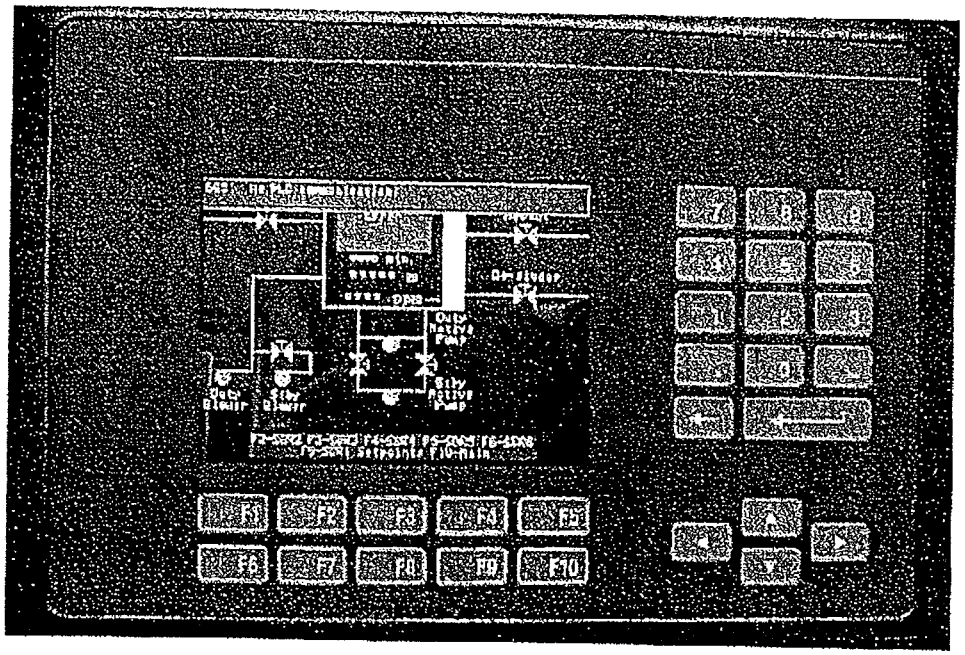

Optional SCADA Screens

SBR Overview Screen

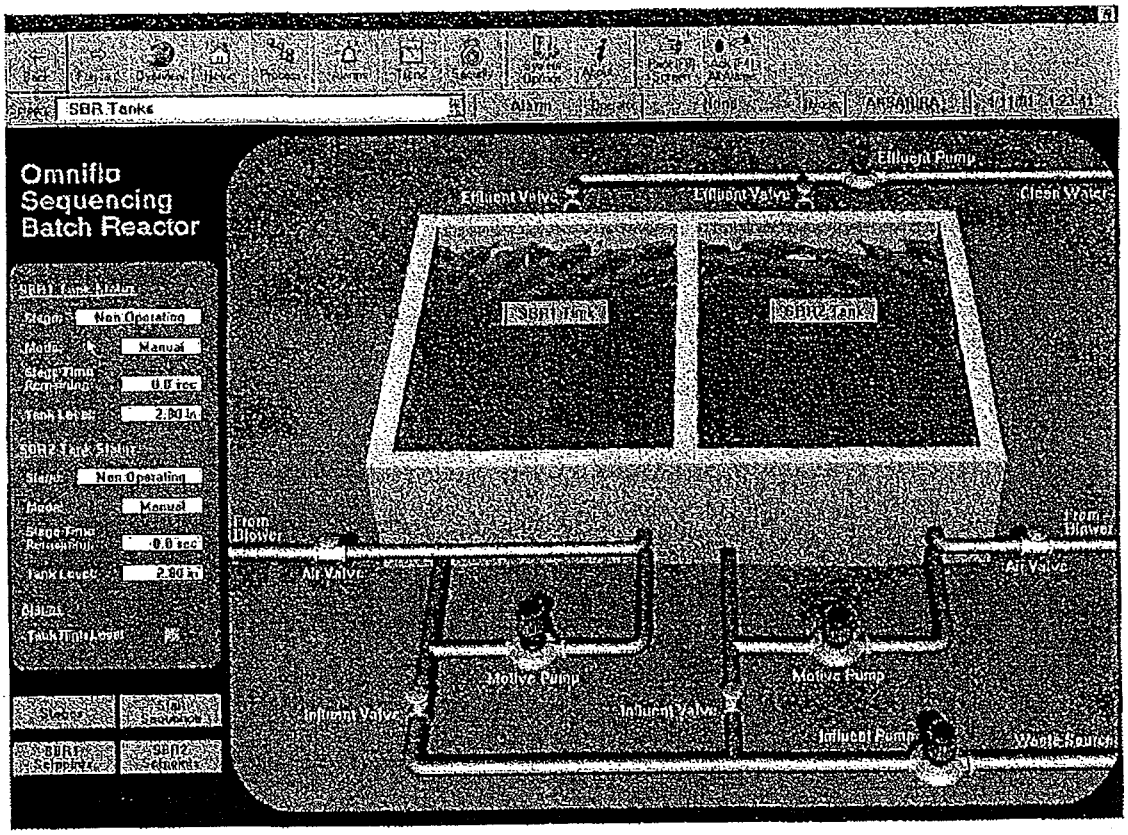

This is the most comprehensive and useful screen available to monitor the SBR system. Understanding all of the information given on this screen will lead to a good understanding of the operation of the SBR. The overview screen displays process and equipment status for all tanks being monitored by the SBR control system including digesters if provided. Tank levels, time remaining in cycles and flow rate are also displayed, as well as optional items like D.O. and air flow.

Optional SCADA Screens

Plant Overview Screen

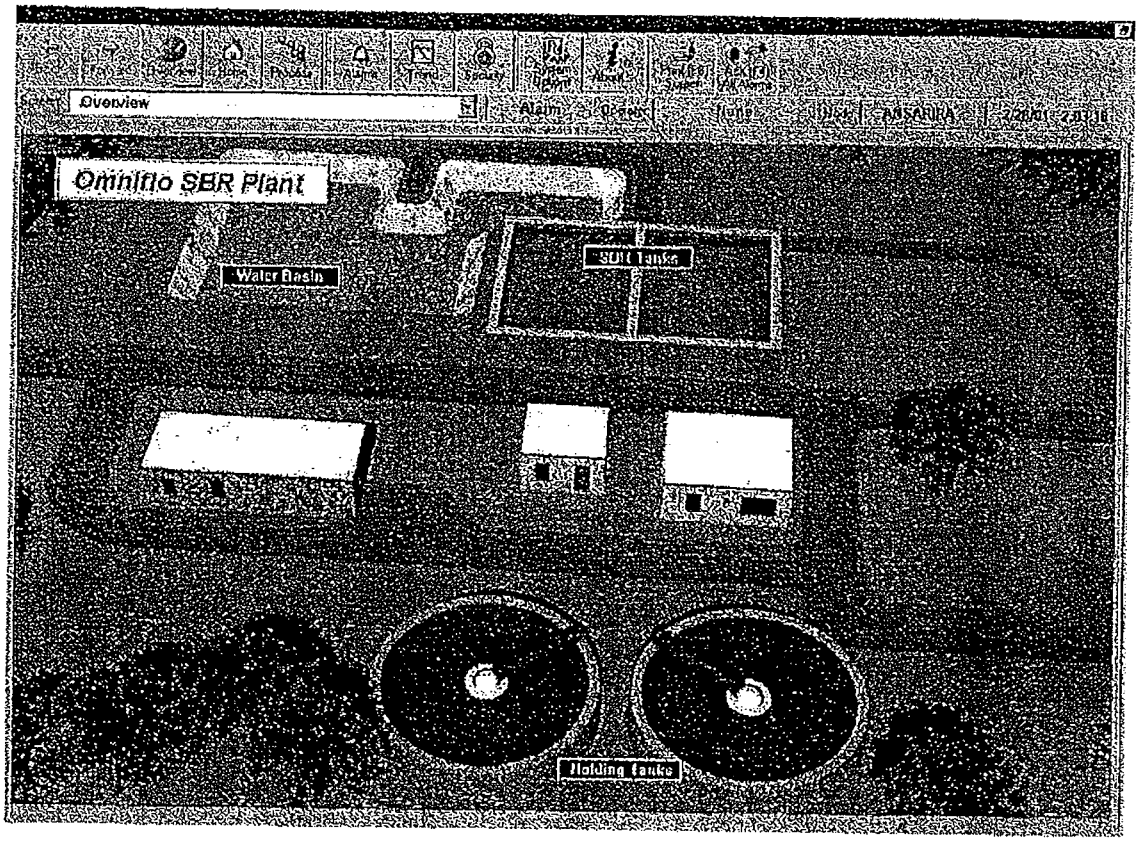

The plant layout screen is a simple representation of the way your SBR is constructed. All major equipment and piping is shown. Indicators show the conditions of each piece of equipment and graphics show the actions taking place, as well as the common screen showing state, cycle time, etc.

Optional SCADA Screens

Equipment Layout Screen

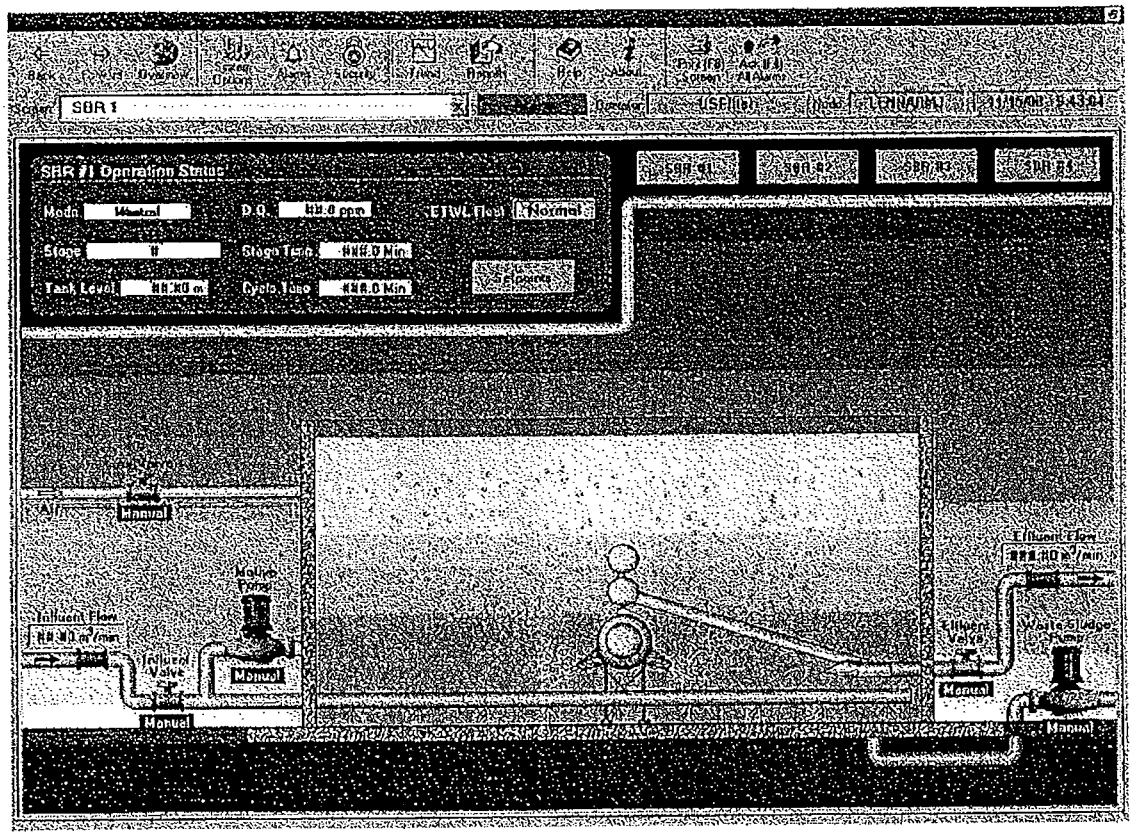

The equipment layout screen allows the operator to graphically isolate one of the controlled processes. Typically, the equipment and its current operational condition are indicated. Often, selection criteria and other user definable data are also presented.

Optional SCADA Screens

Events Screen

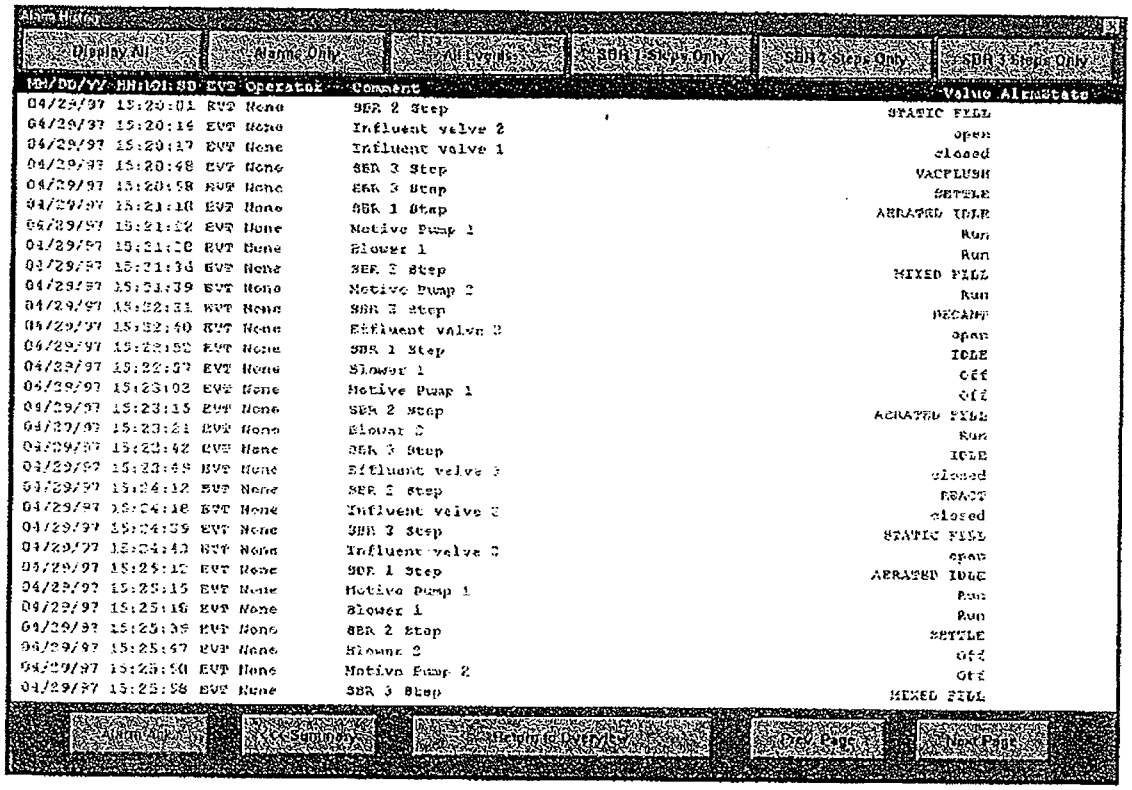

The events screen shows events that have occurred. Events are selectable for the entire system or by tank. The entries not only logs the event, but also the time of the event and when applicable, the referenced tank number, type of event and flow rate. This information can be electronically stored and may be printed on demand.

Optional SCADA Screens

Alarms Screen

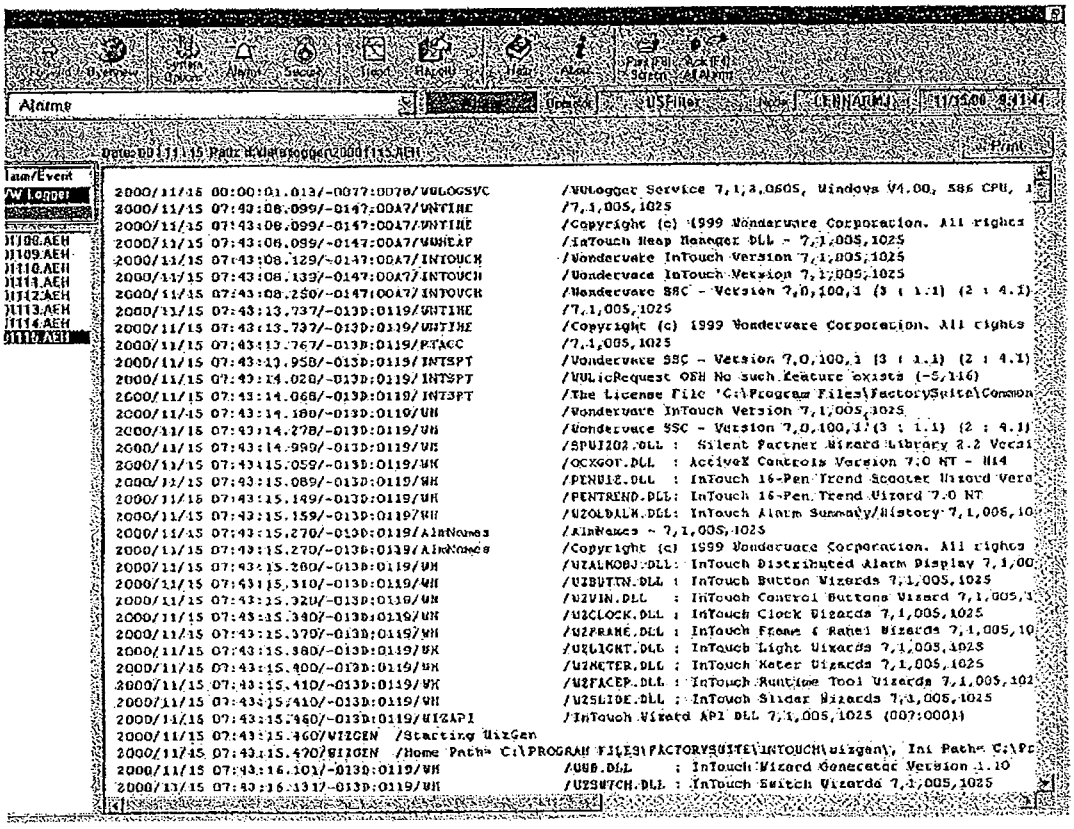

The alarms screen will show all current alarms, all pending alarms or indicate that no alarm conditions exist. Manually switching to the alarms screen is rarely necessary.

There are three levels for any alarm, "Unacknowledged," "Acknowledged" and "Alarm Pending". When an alarm is first issued, it issues a "Unacknowledge" alarm. The alarm remains in this state until the operator acknowledges the alarm condition and then the status is changed to a pending alarm until the condition is cleared. This allows the operator to silence the alarm and remain pending until the problem is corrected.

Optional SCADA Screens

Operator Setpoint Screen

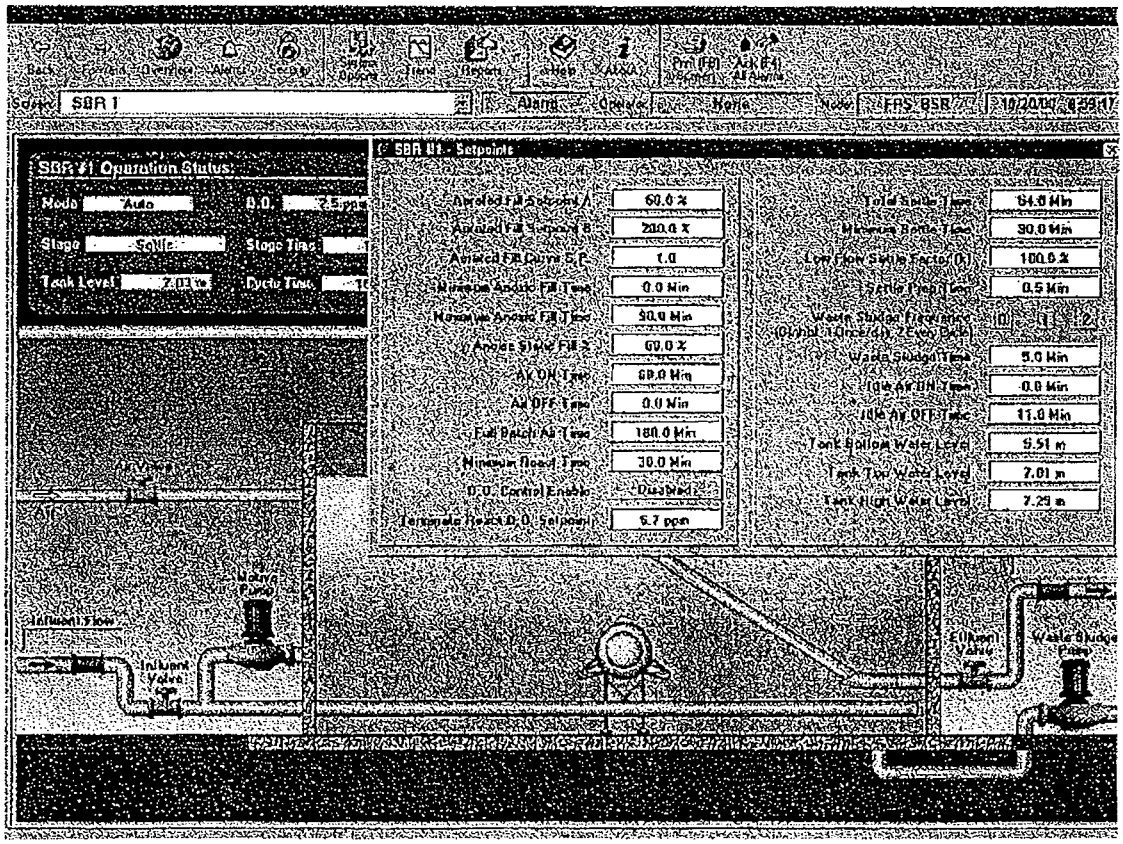

The operator setpoint screen contains the setpoints that are operator changeable to control the operation of the SBR system. These variables allow control over the Anoxic and Aerated portions of the process, as well as other features. The setpoints with minimum and maximum values are available with levels of password protection based on operator and supervisor control.

The Control Panel

Following is a typical interior view of the control panel. The standard panel exterior contains all Hand/Off/Auto switches and indicating lights for all equipment supplied with the OMNIFLO® SBR System. Also, on the exterior is the door mounted operator interface for monitoring the process from the panel. This unit provides tank levels, process states and alarm information at the touch of a button. The indicating lights provide equipment status.

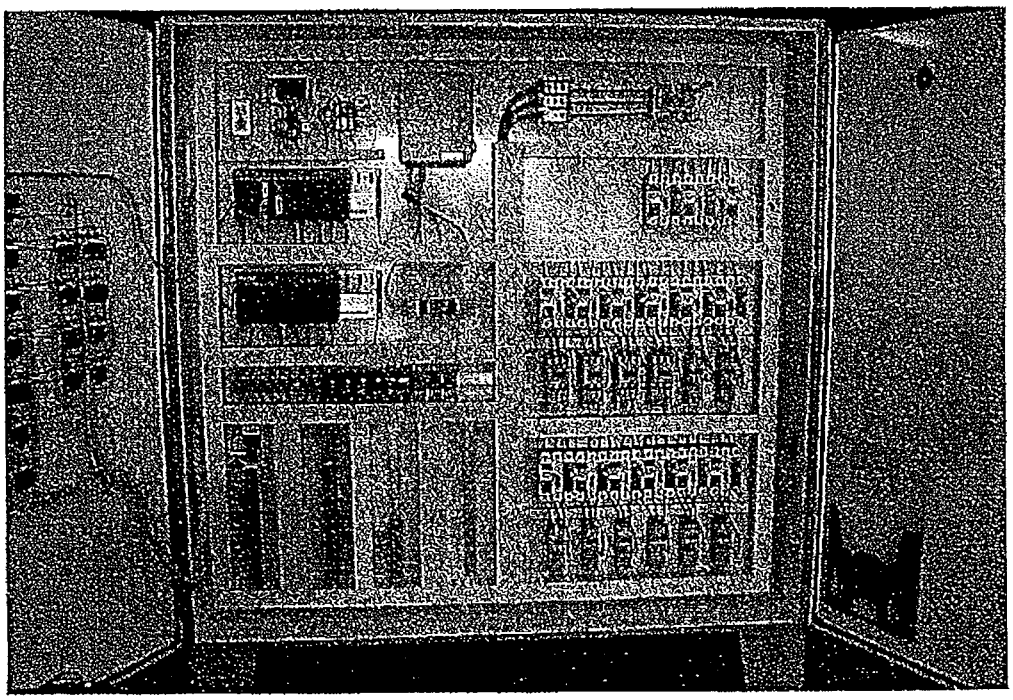

CONTROL PANEL
Setting the standards in the Wastewater Control Industry

The panel is coded to provide installers and operators a system which is easily understood by simply understanding the basic concept. The panel is also specifically labeled for each piece of equipment.

All components in the control panel are heavy duty and reliable, yet economical. All items are standards of the industry.

Siemens Water Technologies is extremely proud to offer these technologically advanced, yet simple control systems. All systems are extensively tested prior to shipment to your project, and tailored to the specific project needs.

10

MEETING NOTES

DATE:	Wednesday, July 23, 2008
TIME:	9:00 a.m.
LOCATION:	MCESD
PROJECT:	**Hassayampa Ranch WRF Design**
SUBJECT:	ATC COMMENTS REVIEW MEETING
ATTENDEES:	MCESD: Dale Bodiya, Ken James, Wesley Shonerd, Kevin Chadwick Global Water: Jason Bethke MES: Brian McBride, Deanne Kincade
DISTRIBUTION:	Attendees; Graham Symmonds (Global), Robin Bain (Global), Matthew Andros (MES)

Discussion Items:

1. Discussion Overview

Global Water provided a brief overview of the Hassayampa Ranch WRF design project and the ACC-imposed ATC deadline of July 31, 2008. Global Water stated that the purpose of the meeting was to review MCESD's comments and provide additional information or clarification, as needed, in an effort to obtain an ATC by the end of July. MCESD asked if the issuance of an Approval of Proposed Plan would satisfy the ACC requirement for an ATC. Global responded that while an Interim ATC with stipulations would probably be acceptable to the ACC, an Approval of Proposed Plan would probably not be since the terminology of the approval would be different.

MCESD stated that it had limited experience approving design-build projects but agreed that an Interim ATC was the best approach. The Interim ATC could cover the civil grading and excavation work as shown on the scaled drawings. The remaining detailed design drawings, when submitted, will be based on the approved Engineering Design Report and will be in general conformance with the sealed concept drawings for the other disciplines.

2. Control Philosophy

MCESD provided a brief review of the design submittal and stated that while the control of individual treatment systems was included in the drawings and report, an overall control philosophy describing how systems were tied together was missing. MES explained that the SBR equipment manufacturer determines the control strategy based on the owner's needs and the minimum control required for provision of a process guarantee. This control strategy is generally developed as part of the contractual process with the manufacturer and reviewed during the shop drawing process and is therefore not available at this time. MES said that they will submit a general control philosophy describing the owner's basic requirements for the WRF, with the understanding that the detailed control strategy provided by the manufacturer may differ.

3. Technical Literature

MCESD requested that Global Water/MES provide an additional attachment to the Design Report that includes technical literature on the major pieces of treatment equipment. MCESD understands that the specific manufacturer of the equipment has not been selected at this time and the actual equipment provided could be the same as, or equal to, the equipment on which the information is provided.

4. SBR Single-Basin Operation

MCESD referred to the manufacturer's information provided for the Siemens Jet Tech SBR system and noted that their Slug Feed control strategy for single basin operation requires an upstream equalization basin. MES stated that the Slug Feed Control system is one of three control systems offered by Siemens Jet Tech for the overall plant operation, and that this control system is not the one to be used for the Hassayampa Ranch facility. MES said that for the Hassayampa Ranch facility the single-basin operation would be a specific temporary process control mode within the multi-basin control system that would only occur when one basin must be taken out of service for inspection, maintenance or repairs. Under this mode a pre-equalization basin is not required. MCESD requested that calculations on the temporary, single-basin operation be submitted for review. MES agreed to provide calculations prepared by the SBR manufacturer.

5. Preliminary Design-Build Schedule

MCESD stated that the preliminary project milestone schedule does not allow for groundbreaking and completion of substantial work before the ATC's one-year deadline occurs in July 2009. MES said that the schedule shown was tentative and that they could shift the start of construction back one month to accommodate the 1-year timeframe. MCESD also requested the schedule include shop drawings submitted to and approved by the County. MES said they will revise the schedule accordingly. MCESD stated that a one-year extension of the ATC could be granted upon formal request from the owner if there have been no design changes, and upon payment of one-half the initial review fee.

6. Additional Review Fee

Global Water stated that the check for the additional initial review fee would be delivered to MCESD by courier on July 23, 2008.

7. Influent Wastewater Characterization

MCESD stated concern that the assumed influent wastewater characteristics of 300/300/600/45 for BOD/TSS/COD/TN, respectively, were different from the values presented in the MAG 208 WQMP. Global Water and MES stated that the plant process is actually designed on loading rates, not flow rates, and requested that the assumed characteristics be allowed to stand with the understanding that if the actual influent values are higher, the hydraulic capacity rating of the facility will be lowered. Global Water and MES agreed to include a statement in the Design Report as to their understanding that higher influent concentrations may result in a lower hydraulic capacity rating for the facility.

8. Reclaimed Water Disposal

Global Water provided an overview of their philosophy and priorities for reclaimed water disposal, clarifying that direct reuse is the best option for disposal, followed by recharge, and followed by discharge as the worst option. Global Water explained that while discharge is the lowest priority method of disposal since it does not result in either revenue or recharge credits, it is the only method that can be proven to be available right now because the WRF design plans are ahead of the development plans. The Hassayampa Ranch development is not yet at the DMP or plat stage, but plans to include a golf course, lake, and multiple irrigation opportunities. MES agreed to submit a copy of the Hassayampa Ranch development zoning exhibit, which shows the planned land uses within the development. MES also agreed to add a section to the Design Report that provides information on planned reclaimed water disposal methods.

9. Contractor Quality Control

MCESD requested an explanation of how Global Water planned to prevent the contractor from providing lesser materials without using specifications. Global Water responded that a Technical Statement of Requirements is included in the contract and includes minimum criteria for all aspects of the design and construction. Global Water also plans to select only among contractor that have a pre-existing relationship with Global and understand expectations and have proven themselves to be reliable and trustworthy.

MES agreed to provide MCESD with a copy of a sample TSOR from a design-build project previously completed by Global Water.

10. Action Items Summary:

- MES to provide a general control philosophy for MCESD review by Monday, July 28, 2008
- MES to add an attachment to the Design Report that includes technical literature for major process equipment and submit for MCESD review by Monday, July 28, 2008
- MES to add a section on Reclaimed Water Disposal Methods to the Design Report and submit for MCESD review by Monday, July 28, 2008
- MES to provide calculations on single-basin operation of the SBR for MCESD review
- MES to provide MCESD with a sample TSOR for review
- MES to provide MCESD with the Hassayampa Ranch development zoning exhibit showing direct reuse sites
- MES to revise the preliminary project milestone schedule to include MCESD shop drawing review and approval, and to move the dates up by one month to allow for groundbreaking and the completion of substantial work by July 2009
- MES to add a statement to Section 2.1.3 *Influent Wastewater Quality* indicating the understanding that if influent concentrations are higher than those assumed, the hydraulic capacity of the facility may be decreased.

11

GLOBAL WATER
RELIABLE · RENEWABLE · REUSABLE

ES

Hassayampa Utility Company, Inc.

Hassayampa Ranch
Water Reclamation Facility

Design Report

Revision 2

July 28, 2008

Registered Professional Engineer (Civil)
CERTIFICATE NO.
33441
BRIAN P.
McBRIDE
Date Signed 7-28-08
ARIZONA, U.S.A.
Expires 3/31/2011

McBride Engineering Solutions, Inc.
6100 W. Gila Springs Place, Suite 7, Chandler, AZ 85226
Phone: (480) 759-9608 Fax: (480) 706-1106

Hassayampa Utility Company, Inc
Hassayampa Ranch WRF
Design Report

Registered Professional Engineer (Civil) CERTIFICATE NO. 33441 BRIAN P. McBRIDE Date Signed 7-28-08 ARIZONA U.S.A.
Expires 3/31/2011

TABLE OF CONTENTS

Page

1.0 INTRODUCTION 1-1

2.0 WASTEWATER TREATMENT CRITERIA 2-1
2.1 INFLUENT CHARACTERISTICS 2-1
2.1.1 Influent Flow Quantity 2-1
2.1.2 Flow Peaking Factors 2-1
2.1.3 Influent Wastewater Quality 2-2
2.1.4 Industrial Wastewater 2-3
2.2 TREATED WATER QUALITY CRITERIA 2-3
2.3 BIOSOLIDS 2-5

3.0 TREATMENT PROCESS DESCRIPTION 3-1

4.0 TREATMENT UNIT PROCESSES 4-1
4.1 INFLUENT PUMP STATION 4-1
4.2 PRIMARY TREATMENT 4-1
4.2.1 Screenings/Grit Removal Equipment 4-2
4.2.2 Screenings/Grit Removal Bypass Grinder 4-2
4.3 SECONDARY TREATMENT 4-2
4.3.1 Sequencing Batch Reactors 4-3
4.3.2 Post-Equalization 4-5
4.4 TERTIARY TREATMENT 4-6
4.4.1 Sand Filtration 4-6
4.4.2 UV Disinfection System 4-7
4.5 AEROBIC DIGESTION 4-8
4.6 BIOSOLIDS DEWATERING 4-9
4.7 TERTIARY PUMP STATION 4-10
4.8 DRAIN MANHOLE PUMP STATION 4-11
4.9 ODOR CONTROL 4-11
4.10 STANDBY CHEMICAL ADDITION FACILITY 4-12
4.11 STANDBY POWER 4-12
4.12 GENERAL CONTROL PHILOSOPHY 4-12
4.12.1 Influent Pump Station 4-12
4.12.2 Primary Screening and Grit Removal 4-12
4.12.3 Secondary Treatment 4-13
4.12.4 Tertiary Treatment 4-13

4.12.5 UV Disinfection 4-13
4.12.6 Aerobic Digestion 4-14
4.12.7 Biosolids Dewatering 4-14
4.12.8 Tertiary Pump Station 4-14
4.12.9 Drain Manhole Pump Station 4-15

5.0 PERMITTING 5-1
5.1 AQUIFER PROTECTION PERMIT (APP) 5-1
5.2 RECLAIMED WATER (REUSE) PERMIT 5-2
5.3 AZPDES PERMIT 5-2
5.4 UNDERGROUND STORAGE FACILITY (USF) PERMIT 5-3
5.5 WATER STORAGE PERMIT 5-3
5.6 APPROVAL TO CONSTRUCT/APPROVAL OF CONSTRUCTION 5-4
5.7 SPECIAL USE PERMIT 5-4

6.0 RECLAIMED WATER DISPOSAL 6-1
6.1 REUSE 6-1
6.2 RECHARGE 6-1
6.3 DISCHARGE 6-1

1.0 INTRODUCTION

The Hassayampa Utility Company, Inc. (HUC) Hassayampa Ranch Water Recycling Factory (HR WRF) will be located on the north side of Indian School Road, east of 339th Avenue in Maricopa County. The facility will be in the southeastern quarter of Section 22, Township 2 North and Range 5 West of the Gila and Salt River Base and Meridian. The Hassayampa Ranch service area includes approximately 2,050 acres of land, predominantly north of Indian School Road and East of 343rd Avenue.

The HUC HR WRF is planned to be constructed in three phases beginning with 0.5 million gallons per day (MGD), expanding to 1 MGD in Phase II and 3 MGD in Phase III. The size of the WRF will allow for a build out capacity of up to 10 MGD, while maintaining 350 foot setbacks, but only three phases are planned at this time.

The HUC HR WRF will be designed, constructed and operated so as to ensure the greatest degree of discharge reduction achievable. This facility will employ advanced wastewater treatment technology that includes nitrification and denitrification to produce Class A+ reclaimed water that can be directly reused for irrigation, or recharged. Discharge to the local surface water body will only take place when the volume of recycled water produced exceeds the reuse demand and the recharge capacity.

The recommended wastewater treatment processes to be employed at the HUC HR WRF will include the following:

- Influent Pump Station
- Primary Treatment
  - Screenings/Grit Removal Equipment
  - Screenings/Grit Removal Bypass Grinder
- Secondary Treatment
  - Sequencing Batch Reactors
  - Post-Equalization
- Tertiary Treatment
  - Sand Filtration
  - UV Disinfection System
- Aerobic Digestion
- Biosolids Dewatering
- Tertiary Pump Station
- Odor Control
- Chemical Addition Facility

2.0 WASTEWATER TREATMENT CRITERIA

The first step in the design of the HUC HR WRF is to determine the quantity and quality of the influent flow to be treated and the standards that the reclaimed water must meet. These factors determined the type, sizing, and characteristics of the unit process required for the facility. The wastewater treatment criteria developed as the basis for the design of the HUC HR WRF include influent wastewater quantity and quality, required treated water quality, and biosolids quality.

2.1 Influent Characteristics

The characteristics of the influent wastewater include average flow quantity, flow peaking factors and flow quality. All the influent characteristics have been based on published and accepted ranges for Phoenix, Arizona, empirical data, and MES experience.

2.1.1 Influent Flow Quantity

The HUC HR WRF is planned to be constructed in three phases to service the residential and commercial developments within the service area. Wastewater generated has been estimated based on the number of homes expected to be completed in a specific time frame, 2.5 people per dwelling, and a wastewater generation rate of approximately 140 gpcd. The equivalent wastewater generation rate per dwelling unit is approximately 350 gpd, per Maricopa County recommendation, as presented in Table 2-1 below.

Table 2-1 Wastewater Phasing Schedule

Phase	Year Completed	No. of Dwelling Units	Total Estimated Population	Treatment Capacity (MGD)
I	2009	1,425	3,560	0.5
II	2012	2,850	7,140	1.0
III	2017	8,570	21,425	3.0

The Hassayampa Ranch Service Area presented in the 208 Plan Amendment includes a large enough land area that, if fully developed into residential projects, could result in a build out flow of approximately 10 MGD. At this time, the HR WRF is being planned as a 3 MGD facility.

2.1.2 Flow Peaking Factors

The HUC HR WRF is designed with the following peaking factors listed in Table 2-2:

Table 2-2 Design Peaking Factors

Phase	Treatment Capacity (MGD)	Peak Hour Factor	Max Day Factor
I	0.5	3.0	2.0
II	1.0	2.5	2.0
III	3.0	2.0	2.0

The peak hour factor will be used in the sizing of preliminary treatment equipment and sequencing batch reactor equipment and basins. The max day factor will be used in the sizing of all equipment downstream of the post-equalization tank, including the filters and the ultraviolet disinfection.

2.1.3 Influent Wastewater Quality

The wastewater characteristics assumed for the HUC HR WRF design are presented in Table 2-3. These parameters are significantly higher than the typical values that have been previously approved by the environmental regulatory agencies. Data collected from Global Water's existing Palo Verde Utilities Company Campus 1 WRF and other existing wastewater plants serving newer developments in Arizona have been showing an increasing strength of wastewater in the last few years. Examples of recent BOD strengths include the PVUC Campus 1 WRF (300 mg/l), Cottonwood WWTP (363 mg/l), Anthem WWTP (300 mg/l), and Verrado WRF (280 mg/l). Based on this data we believe that it is prudent to raise the expected wastewater strength to levels that are in line with recent data for other new developments within Arizona.

It is also recommended that once the first phase of the facility is operating the historical wastewater strengths should be tested and analyzed prior to the design and construction of the Phase 2 expansion to verify the wastewater strength assumptions. If influent wastewater concentrations of BOD, TSS, COD and Nitrogen are higher than those assumed in Table 2-3, the hydraulic rating of the facility will be lower than that proposed and the Phase 2 expansion will therefore be required earlier than projected.

Table 2-3 Influent Wastewater Concentrations

Contaminant	Unit	Typical Concentrations			HUC Hassayampa Ranch WRF Concentration
		Weak	Medium	Strong	
BOD_5	mg/L	110	220	400	300
TSS	mg/L	100	220	350	300
Total Nitrogen	mg/L	20	40	85	45
pH	-	6	7.5	9	6.5 - 9.0

2.1.4 Industrial Wastewater

The HUC HR WRF is not expected to receive flows that contain industrial, hazardous or mining wastewater, pesticides, PCBs, or radionuclides. The service area will include residential property and light commercial developments. HUC requires permits for all connections to the WRF. The permit review process allows a decision to be made on whether pretreatment is required before discharge to the WRF collection system. The HUC HR WRF will conduct periodic monitoring to detect industrial discharge.

2.2 Treated Water Quality Criteria

The HUC HR WRF has been designed to meet Arizona Title 18 requirements for Class A+ reclaimed water so that all water produced by the facility is available for direct reuse and recharge. Per Title 18 (R18-11-303(A)), the wastewater will undergo secondary treatment, filtration, nitrogen removal treatment, and disinfection. Table 2-4 summarizes the Class A+ water quality requirements and the design treatment criteria.

Table 2-4 Summary of Class A+ Water Quality Requirements and Design Criteria

Water Quality Parameter	Influent Concentration	Title 18 Requirements Class A+	Design Criteria
BOD_5 (mg/L)	300	NA	< 10
TSS (mg/L)	300	NA	< 10
Total Nitrogen (mg/L)	45	< 10	< 8
pH	NA	6.5 – 9.0	6.5 – 9.0
Fecal Coliform (#/100mL)	NA	None Detected	None Detected
Single Sample Maximum Fecal Coliform (#/100mL)	NA	23	<20
24-Hour Average Turbidity (NTU)[1]	NA	< 2	< 2
Maximum Turbidity (NTU)[1]	NA	5	< 5

[1]Chemical addition facilities will be available to provide coagulant addition if the 24-hour turbidity criteria are not met

2.3 Biosolids

The HUC HR WRF will generate a waste sludge that will be hauled offsite for either disposal in a permitted landfill or beneficial land application. For disposal in a permitted landfill, the sludge must not contain any free liquid as defined by Method 9095 – Paint Filter Liquids Test. The test is described in *Test Methods for Evaluating Solid Wastes, Physical/ Chemical Methods* (EPA Publication No. SW–846). In order to pass the Paint Filter Liquids Test, sludge must have a dry solids content of approximately 17-20 percent with no free water. For land application, the sludge must meet the "Class B" requirements, as described below.

The U.S. EPA 40 CFR 503 regulations, specifically 503.32(a) and (b), require biosolids intended for agricultural use to meet certain pathogen and vector attraction reduction conditions. The intent of the Class B requirements is to ensure that pathogens have been reduced to levels that are unlikely to pose a threat to public health and the environment under the specific use conditions. For Class B material that is land applied, site restrictions are imposed to minimize the potential for human and animal contact with the biosolids for a period of time following land application until environmental factors have further reduced pathogens. (No site restrictions are required with Class A biosolids.) Class B biosolids cannot be sold or given away in bags or other containers. The criteria for meeting Class B include testing to show that the biosolids have less than 2,000,000 colony-forming units per gram dry weight of total solids, or that the facility produces the biosolids through one of the following processes:

- Aerobic Digestion
- Air Drying
- Composting
- Lime Stabilization
- Equivalent Process to Significantly Reduce Pathogens (EPA-defined)

The HUC HR WRF will be designed with a full-capacity aerobic digestion process and mechanical dewatering equipment to meet the criteria for Class B biosolids.

3.0 TREATMENT PROCESS DESCRIPTION

The Hassayampa Utility Company Hassayampa Ranch Water Recycling Factory (HUC HR WRF) will be constructed to meet ADEQ BADCT guidelines. The ultimate treatment facility will be a 3-MGD sequencing batch reactor (SBR), activated sludge wastewater treatment facility that includes nitrification and denitrification, and tertiary treatment using filtration and UV disinfection. The facility will be constructed in phases. Phase I consists of a 0.5 mgd plant which will then be expanded to 1 mgd in Phase II and then to 3 mgd in Phase III. The 3-mgd module will consist of two sequencing batch reactors, a post-equalization basin, an aerobic sludge digester, tertiary filtration, UV disinfection, and mechanical solids dewatering.

Wastewater flow will be received at the influent lift station located on the treatment plant site. The influent lift station is part of the collection system and is therefore not a part of this design. A General Permit Type 4.01 will be obtained for this lift station and it will be fully enclosed and odor controlled.

Flow will be pumped from the Influent Lift Station to the Headworks where it will be passed through a screening and grit removal combination unit. The unit will use a perforated screen to remove trash and rags followed by a grit chamber, where the grit will be allowed to settle and then removed. Flow from the combination unit into the SBRs will be controlled using motor-operated inlet valves. The treatment plant will have alarms that will be connected to an automatic dialer system for failure protection. The standby generator will be sized to run the critical wastewater treatment plant units and the pump stations in the event of a power failure.

The wastewater treatment plant will be designed to meet a recycled water requirement of 10 mg/L for BOD_5 and TSS and < 8 mg/L for total nitrogen. The total detention time in the SBRs for treatment will be approximately 19 hours at average design flow utilizing one basin. A total retention time of over 37 hours will be available if both basins are utilized. All tanks will be constructed with reinforced concrete and leak tested prior to being placed into operation. Denitrification will take place under mixed anoxic conditions in the reactor after nitrification is accomplished under aerobic conditions. Anoxic conditions will be created by operating mixers without aeration. Settling will occur in the reactor prior to effluent being decanted into a post-equalization basin. Sludge will be wasted to an aerobic digester for further treatment.

Each SBR will operate 4 alternating and overlapping cycles per day (6.0 hours per cycle) followed by decanting and sludge draw:

- Anoxic Fill — Introduction of Raw Influent without Mixing or Aeration
- Aerated Fill — Mixing Only with the Introduction of Raw Influent
- Denitrification — Aeration and Mixing with the Introduction of Raw Influent
- React — Aeration and Mixing without the Introduction of Influent
- Settle — Typical Quiescent Time 45 – 60 Minutes
- Decant — Typical Decant Time < 120 Minutes
- Sludge Draw — Typical Sludge Wasting Time < 30 Minutes
- Idle — Time Varies Depending on Settle, Decant and Sludge Draw Times

The SBRs will be operated at a water depth of just under 12 feet at the start of a cycle. The maximum water depth at the end of a cycle will be 18.0 ft at average design flow for Phase I. Jet-aeration manifolds will be used for mixing and aeration in the SBRs. Dissolved oxygen levels will be controlled using D.O. sensors which will control the operation of the blowers.

Each SBR includes a solids excluding floating decanter with an automatic control valve. Supernatant will flow by gravity through the decanter to the post-equalization basin. The maximum water depth in the post-equalization basin will be just under 10 feet which will be 2 feet below the minimum water depth in the SBR to allow for the decant valve to remain fully open. Post-equalization will be used to equalize flow from the SBRs and create more uniform loading to the filters and the UV system.

Following secondary treatment, the secondary effluent will be pumped from the post-equalization basin to the tertiary filters. The automatic backwash sand filters will be sized for a maximum daily peak flow rate equal to twice the average design flow of the facility. The filters will include automatic backwash cycling with a total backwash volume equal to approximately 0.75% of the daily filtered flow rate.

The filtered effluent will flow by gravity to the UV disinfection system, which will consist of a series of UV banks installed in an open channel configuration. The UV lamps will be designed for twice the average design flow with one module on stand-by. The bulbs will be low-pressure, high intensity with variable UV output that is determined from the filtered effluent turbidity. The UV system also includes an automatic cleaning mechanism that will continuously reduce the bulb fouling and extend bulb life to 8,000 hours. Spare bulbs and sleeves will be kept on site to expedite repairs. In the event that the UV system is offline or fails catastrophically, liquid sodium hypochlorite will be added to ensure proper disinfection. Sodium bisulfite will be available for dechlorination prior to recharge or surface water discharge.

Following UV disinfection, the reclaimed water will flow by gravity to the tertiary pump station. Recycled water will be pumped to irrigation sites for direct reuse as a Class A+ reclaimed water. During winter months when reuse of all reclaimed water is not possible, it will be recharged or discharged to the Hassayampa River under an AZPDES permit.

Sludge will be stabilized to Class B level in the aerobic digester, which is designed for a hydraulic detention time of 24 days, and decanted to approximately a 2% solids concentration. Liquid sludge will be thickened to approximately 20% solids with a centrifuge and trucked to an approved landfill, or to permitted agricultural fields for land application.

4.0 TREATMENT UNIT PROCESSES

Based on the original criteria for the facility provided by Global Water – Hassayampa Utility Company, the wastewater treatment processes to be employed at the Hassayampa Ranch WRF will include the following:

- Influent Pump Station
- Primary Treatment
  - Screenings/Grit Removal Equipment
  - Screenings/Grit Removal Bypass Grinder
- Secondary Treatment
  - Sequencing Batch Reactors
  - Post-Equalization
- Tertiary Treatment
  - Sand Filtration
  - UV Disinfection System
- Aerobic Digestion
- Biosolids Dewatering
- Tertiary Pump Station
- Odor Control
- Standby Chemical Addition Facility

4.1 Influent Pump Station

In Phase I, the Influent Pump Station will be constructed as a large diameter pre-cast manhole. As Phase II and Phase III are implemented, a wet well will be constructed to accommodate the additional pumps. The influent lift station will be part of the collection system and is therefore not a part of this design. A General Permit Type 4.01 will be obtained for this lift station.

4.2 Primary Treatment

Primary treatment will consist of a combination screening/grit removal unit which works by separating the solids from the flow in a screening zone. The screened, degritted liquid will flow over a weir to the SBR's while the dewatered solids and grit will be discharged through chutes for disposal. The preliminary treatment equipment will be fully enclosed to minimize odors and will be installed within the headworks building. The entire headworks building will be odor controlled.

The preliminary treatment for Phase I will have the following components:

- Influent Combination Unit for Screenings and Grit Removal
- Bypass Grinder Unit
- Disposal Container

4.2.1 Screenings/Grit Removal Equipment

Wastewater from the influent pump station will be pumped to the combination unit where the screenings and grit will be removed. The combination unit will have the capacity to treat the peak flow for both Phases I and II. An emergency bypass line with an inline grinder will be installed in case of a failure of the combination unit. A second combination unit will need to be added for the third phase.

Screenings will be collected and disposed of through a chute to a dumpster. To minimize the volume of screenings produced, the combination unit will dewater the screenings through compression in a dewatering zone and dispose of them in the disposal container. Water removed by the washing/dewatering process will be returned to the head of the plant through a drain line which returns the flow to the influent pump station by way of the drain manhole pump station. The conceptual design parameters for the preliminary treatment system are presented in Table 4-1.

Table 4-1 Preliminary Treatment System Parameters

Parameter	Design Values (Phase I)
Number of Units	1
Screen Opening Type	Perforated Plate
Screen Opening Size (mm)	6.0
Hydraulic Capacity, each (mgd)	3.5
Firm Hydraulic Capacity (mgd)	3.5
Number of Disposal Containers	1
Estimated Screening Volume (CF/day)	6

4.2.2 Screenings/Grit Removal Bypass Grinder

An in-line grinder will be utilized in the event that a bypass of the combination unit occurs due to a failure or blockage of the unit that trips the high alarm. The grinder bypass line will feed the influent to the SBR basins under this emergency condition.

4.3 Secondary Treatment

Secondary treatment will consist of two sequencing batch reactor (SBR) basins and a post-equalization basin. Two cast-in-place SBR structures and one post-equalization basin are planned for the first phase of this facility. The secondary treatment process will be split into two parallel trains of equal capacity. Two basins will allow for the operational flexibility of taking one basin out of service for a short period of time for maintenance, as needed. The bioreactors will be covered and odor controlled.

4.3.1 Sequencing Batch Reactors

The two SBR basins will be operated in staggered cycles that are approximately 6 hours in duration, with each cycle consisting of 5 different phases to achieve maximum yield. The first phase will be an Anoxic Fill, during which the basin will be loaded with wastewater without aeration, and the soluble BOD will be absorbed and stored by the facultative biomass until air is received to metabolize the food.

The second phase, Aerated Fill, will be initiated once approximately 75% of the fill period is completed. The blowers and pumps will be started and provide air and complete mixing to initiate the "feasting" period of the biomass. During this phase, the biomass will begin to metabolize the food it has absorbed and nitrification and denitrification will start to occur. The ammonia in the wastewater will then be converted to nitrates within the aerated plume of the basin. The nitrates will then be converted to nitrogen gas within the low dissolved oxygen areas of the basin. The denitrifying organisms will use the BOD as a food source along with the oxygen by-product from the nitrate conversion.

The third phase, Denitrification, allows for additional denitrification time. During this phase, the blowers will be turned off and the mixing pump will continue to mix, providing anoxic mixing to drive denitrification.

The fourth phase, React, will occur after the basin has completed filling, and the influent flow will be diverted to the other SBR basin. Since the influent flow will be diverted, no more food for the biomass will enter the basin forcing the organisms to scour for any remaining BOD. Aeration will continue in the full reactor until complete biodegradation is achieved; mixed liquor will then be drawn into and recycled within the motive pumps through the jet aerator. The React phase will continue until the food is consumed and the biomass starts entering a "famine" state. A True React occurs where there is no influent or primary effluent within the reactor and is essential in achieving intense famine conditions for optimum organism selection. Self cleaning D.O. probes will monitor the D.O. levels and signal the blowers and pumps accordingly.

The reactor will then enter the fifth phase, Settle, where the biomass will be allowed to settle in perfect quiescent conditions; no influent will be introduced and no secondary effluent will be decanted. Since the reactor will be under true quiescent conditions during settle, 100% of the reactor capacity will be available for separation. Once the Settle phase is completed, the secondary effluent will be decanted and sent to the post-equalization basin for further processing. The decant phase will continue until approximately the upper 1/3 of the basin is discharged.

The conceptual design parameters for the bioreactor, as calculated by the manufacturer, are summarized in Table 4-2. The manufacturer's complete calculations are provided in **Appendix A**.

Table 4-2 Bioreactor Design Parameters

Parameter	Value (Phase I)
Reactor and Process Char.	
Design MLSS (mg/L)	3,000
Hydr. Retention Time (days)	1.58
Aerobic Sludge Age (days)	8.5
System SRT (days)	17.0
Biosolids Yield Factor (per d)	0.54gVSS/gBOD
Oxic F:M (gCOD/gMLSS/d)	0.25
Syst. F:M (gCOD/gMLSS/d)	0.13
Process Parameters	
Avg. COD removed (lb/d)	2,189
Max. COD removed (lb/d)	3,440
Min. SRT – peak load (days)	7.3
Avg. biosolids yield (lb/d)	547
Avg. net sludge yield (lb/d)	1,039 (COD)
Max. sludge yield (lb/d)	1,352 (COD)
Req. aerobic mass (lb MLSS)	9,853
Req. aerobic volume (MG)	0.39
Aerated portion of cycle (%)	50.0
Req. total SBR volume (MG)	0.79
SBR Basin Design	
# of basins	2
Length (ft)	65
Width (ft)	45
TWL @ avg. flow (ft)	18.0
Total SBR volume (MG)	0.79
Total SBR retention time (hr)	37.8
Standard O_2 Req. (lbO_2/d)	3,285
Process Design	
No. batches/day/SBR	4.0
Max. Fill Time (hr)	3.0
Complete Cycle Time (hr)	6.0
Design Air Flow (SCFM)	579
Total Number of Blowers	2 (incl. spare)
Air Flow per blower (SCFM)	579
Total Number of Pumps	2
Total Pump Head (ft)	21
Flow per Pump (gpm)	2,746
Required Jet Head (ft)	17
Total Pump BHp/basin	19.2
Volume per Decant (gal)	62,500
Average Decant Flow (gpm)	2,083

4.3.2 Post-Equalization

A post-equalization basin will be constructed as part of this design. The basin will reduce flow variations to the downstream filtering and disinfection processes, thereby increasing the effectiveness of the processes and reducing the cost of the equipment required. Post-equalization will also ensure that there are not large variations in flow for the metering pumps and chlorine analyzers. The equalization process for Phase 1 is required to accommodate at least 70,000 gallons of flow storage volume. The designed basin will have a capacity of approximately 2 decant cycles. The basin will be a self-cleaning non-aerated type, with a bottom sloped towards a sump located in the corner of the basin.

Due to plant hydraulics, the post-equalization basin will also contain two submersible pumps that will pump secondary effluent to the filters. The pumps will be added during the first phase and will serve as duty and redundant units. Phase 1 Equalization Basin design parameters are summarized in Table 4-3.

Table 4-3 Post-Equalization Basin Design Parameters

Parameter	Design Values
Length (ft)	65
Width (ft)	25
Maximum Water Level (ft)	9.9
Minimum Water Level (ft)	3
Maximum Capacity (MG)	0.2
Decant Volume (MG)	0.0625
Pump Type	Submersible
Number of Pumps	2 (1 Duty/1 Standby)
Pump Capacity, each (mgd)	1
Pump Capacity, each (gpm)	695

4.4 Tertiary Treatment

Tertiary filtration follows the secondary treatment process and is required in the production of Class A+ reclaimed water. Filtration lowers the turbidity of the treated wastewater and removes solids prior to disinfection. Conventional tertiary filters, automatic backwash filters, generally include one or more layers of sand or anthracite media, and use water backwash or air scour for media cleansing.

Disinfection of the wastewater is required for the production of Class A+ reclaimed water. Currently the two most common means of disinfection for tertiary treated wastewater are chlorine disinfection followed by de-chlorination, and ultra-violet light (UV) disinfection. However, chlorination requires the use of a contact chamber that has a relatively large footprint. In addition, the use of chlorine in the quantities required for disinfection would not be consistent with the goals of the design to minimize the use of all chemicals, and the use of a chlorination/de-chlorination system as a primary disinfection choice also increases the future regulatory risk in regard to disinfection by-products. Therefore, this facility will utilize a UV disinfection system with sodium hypochlorite available in the event a failure of the UV equipment occurs.

4.4.1 Sand Filtration

The secondary effluent will be pumped from the post-equalization basin to the inlet channel of the pulsed-bed (rapid flow gravity) tertiary filters. A chemical injection point will be provided prior to the flow entering the filters to allow for coagulant addition to aid the filter process. The flow will enter the filter cells through proportioning weirs and cascade into the influent distribution trough and onto the filter cell sand through v-notch weirs. The flow will then be distributed evenly across the sand through the use of splash plates. As the flow reaches the surface of the filter media, the larger particles within the secondary effluent will be retained on the media surface. The finer particles enter the spaces between the sand and grains, or the interstices, and will be trapped. Over time, large particles will cover the filter media surface, thereby increasing the headloss and causing the water level to rise over the media surface.

A diffuser will be part of the pulsed-bed filter design and will use low pressure diffused air bubbles to create a gently rolling motion in the liquid over the filter surface, thereby lifting floc particles from the media surface and suspending them in the liquid. The bed will also have the ability to "pulse", or automatically regenerate the filter surface without initiating a backwash cycle. This will be achieved by closing the filtrate outlet valve, trapping atmospheric air in the underdrain. The backwash inlet valve will then be opened and the backwash pump will flood the underdrain cavity with filtered water, pushing the trapped air up through the media to the surface. This process will last about 20 seconds and dislodge particles trapped on the media surface and entrain them in the liquid above the filter surface.

An additional backwash cycle will be used for more thorough media regeneration. Once maximum headloss is achieved, the 3.5 minute backwash cycle will be initiated and stored filtrate will be pumped up through the filter media, pushing a pulse of air up through the bed. The unfiltered water will be directed out through the backwash troughs along each filter cell. The unfiltered water is then piped from the backwash troughs to the mudwell, and is then pumped to the drain manhole, and back to the head of the facility. Once the backwash cycle is completed, the regular filtration cycle will be resumed. Because the filters will be located downstream of the post-

equalization basin, they are sized for a max-day peak of twice the average daily flow instead of the larger peak-hour flow.

Table 4-4 summarizes the design values for the tertiary filtration system. Manufacturer information on the pulsed-bed filters is included in **Appendix B**.

Table 4-4 Tertiary Filtration System Design Parameters

Parameter	Design Values
Type	Pulsed-Bed Sand
Type of Media	Sand
Depth of Media (in)	10
Number of Filter Cells	3
Filter Cell Length (ft)	16
Filter Cell Width (ft)	4.5
Filter Area per Cell (sf)	72
Total Filter Area (sf)	216
Average Filtration Rate (gpm/sf)	3.2
Firm Filtration Rate (gpm/sf)	4.8
Firm Flow Capacity (mgd)	1.0
Maximum Flow Capacity (mgd)	1.5
Coagulant Addition	Yes, prior to inlet channel

4.4.2 UV Disinfection System

A UV disinfection system is recommended for the HUC HR WRF. The UV system for Phase I will consist of one channel containing 4 banks of ultraviolet bulbs. Each UV bank will include a fully automated cleaning system that eliminates the need for manual sleeve cleaning. The UV system power panels will be housed in weatherproof enclosures located near the reactor units. Because the UV disinfection units will be located downstream of the post-equalization basin, they are sized for a max-day peak of twice the average daily flow. The proposed design criteria for the UV disinfection system are summarized in Table 4-5.

Table 4-5 UV Disinfection System Design Parameters

Parameter	Value (Phase I)
Influent Turbidity (NTU)	≤ 2
Effluent Fecal Coliform (cfu/100 mL)	Non-Detectable
Log Removal	>3
No. of Units	4
Flow Capacity per Unit (mgd)	0.35
Firm Flow Capacity (mgd)	1.0
Configuration Type	Parallel
Design Transmissivity (UV Transmittance %)	70

4.5 Aerobic Digestion

Aerobic Digestion will be provided to stabilize the waste activated solids (WAS). Bulletin No. 11 recommends a retention time of 16 to 18 days for stabilization and for purposes of this evaluation, a conservative estimate of 24 days retention of the Average Daily Maximum Month (ADMM) flow of solids production has been applied. The aerobic digester process equipment consists of aeration blowers, coarse air bubble diffuser grids, digested sludge pumps, and a mechanism for decanting. The supernatant will be decanted from the sludge digester and returned to the head of the plant via the drain manhole pump station. The design parameters for the digester are presented in Table 4-6.

Table 4-6 Aerobic Digester Design Parameters

Parameter	Value (Phase I)
Solids Retention Time (d)	24
Sludge Produced (based on TSS, lb/d)	873
Digester sludge concentration	2%
Digester sludge production (gpd)	5,300
No. of Digesters	1
Total Digester Volume (MG)	0.17
Percent VSS	75%
Standard Oxygen Required (lb/d)	878
Total Number of Blowers	2 (1 Duty/1 Standby)
Air Flow per Blower (SCFM)	700
Blower Discharge Pressure (psig)	9.33
BHp per Blower	41.1

4.6 Biosolids Dewatering

The HUC HR WRF will utilize a centrifuge for solids dewatering based on its ability to produce a dry cake that will pass a Paint Filter Test as required for landfill disposal. The centrifuge will be installed on a mezzanine within the solids handling, and this elevated location will facilitate removal of the cake. The dewatered sludge cake will drop down a chute into a disposal container below located near an overhead door to allow truck access and dewatered sludge cake removal.

The solids dewatering design parameters are presented in Table 4-7.

Table 4-7 Centrifuge Design Parameters

Parameter	Design Values
Type	Centrifuge
Number of Units	1
Internal Diameter (ft)	1.0
Feed Rate (gpm)	60
Sludge Feed Pump Type	Progressive Cavity
No. of Sludge Feed Pumps	2 (1 Duty/1 Standby)
Digester Sludge Production (lb/d)	873
Digester Sludge Production (gpd)	5,300
Maximum Runs per Week (days)	5
Daily Sludge Load at 5 days/week (gal)	5,300
Maximum Daily Run Time (hrs)	1.5

4.7 Tertiary Pump Station

The tertiary pump station will deliver reclaimed water to both the on-site non-potable water (NPW) system via a hydropneumatic tank and the off-site reclaimed water piping system. The tertiary pump station will be located downstream of the UV disinfection channel and will consist of a standard below-grade wetwell with three vertical turbine pumps connected through a distribution manifold. Butterfly valves will be installed between the pumps to allow one of the pumps to be used as a redundant unit for each system and to provide isolation of each pump for maintenance or replacement.

The design parameters for the Tertiary Pump Station are presented in Table 4-8.

Table 4-8 Tertiary Pump Station Design Parameters

Parameter	Design Values
Number of Pumps	3 (2 Duty/1 Standby)
Pump Type	Vertical Turbine
Pump Capacity, each (gpm)	500
Pump Capacity, firm (gpm)	1,000
Pump Capacity, firm (mgd)	1.4
Chamber Surface Area, each (ft x ft)	13 x 9
Assumed Wetwell Depth (ft)	7
Wetwell Volume (gal)	6,000

4.8 Drain Manhole Pump Station

A drain manhole pump station will be utilized at the HUC HR WRF to recycle waste flows back to the head of the facility. Throughout the treatment process, waste flows from the screening/grit combination unit, digester, filters, solids handling, and odor control will be piped to the drain manhole pump station. A force main from the drain manhole pump station returns these waste flows to the head of the facility. The drain manhole pump station will contain two submersible pumps, one for duty and one for standby. The drain manhole pump station design parameters are presented in Table 4-9.

Table 4-9 Drain Manhole Pump Station Design Parameters

Parameter	Design Values
Number of Pumps (total)	2
Pump Type	Submersible
Pump Capacity, each (gpm)	100
Pump Capacity, firm (gpm)	100
Chamber Surface Area, (ft^2)	28
Wetwell Depth (ft)	11
Wetwell Volume (gal)	2300

4.9 Odor Control

A wet scrubber system will be provided for the HUC HR WRF to provide odor control. The wet scrubber will utilize 3 stages to remove the offensive odors. In Stage 1, the process gas will be pretreated with blowdown from Stage 2/3 as well as sodium hydroxide (NaOH) to remove 70-80% of the hydrogen sulfide (H_2S). The air will then pass through Stages 2 and 3, where an oxidation reaction will occur using NaOH and sodium hypochlorite (NaOCl) and removes the remaining H_2S.

Table 4-10 outlines the design parameters for the wet scrubber, and Table 4-11 provides details on the process treatment units, type of enclosure and method of odor control.

Table 4-10 Wet Scrubber System Design Parameters

Parameter	Value (Phase 1)
Air Flow Rate (cfm)	13,800
Average Inlet H2S Concentration (ppm)	10
Peak Inlet H2S Concentration (ppm)	20
Minimum H_2S Removal	99% or 0.5 ppm, whichever is greater

Table 4-11 Odor Control Summary

Treatment Process Unit	Odor Control	Enclosure Type
Headworks	Wet Scrubber	CMU Building
Secondary Treatment – SBR Basins	Wet Scrubber	Concrete Basins w/Metal Covers
Aerobic Digester	Wet Scrubber	Concrete Basins w/Metal Covers
Tertiary Filters	None	N/A
UV Disinfection System	None	N/A
Tertiary Pump Station	None	N/A
Solids Handling Equipment	Wet Scrubber	CMU Building

4.10 Standby Chemical Addition Facility

Standby chemical addition facilities containing filter coagulant will be provided to ensure that recycled water turbidity levels are always within the permit limits of 2/5 NTU.

4.11 Standby Power

This facility will utilize a load-shedding plan which will allow essential process equipment to operate using an 800-kW stand-by generator for the 0.5 mgd flow.

4.12 General Control Philosophy

The plant is to be monitored, controlled, and adjusted through a centralized SCADA system programmed using a Wonderware software platform. The general control philosophy for the plant, on a unit-by-unit basis, is presented in the sections which follow.

4.12.1 Influent Pump Station

In Phase I, the Influent Pump Station (IPS) will be constructed as a large diameter pre-cast manhole. As Phase II and Phase III are implemented, a wet well will be constructed to accommodate the additional pumps. The influent lift station will be part of the collection system and is therefore not a part of this design. However, the IPS will be monitored and controlled through the plant SCADA system. A more detailed description of the design intent for the IPS controls is available separate from this report.

4.12.2 Primary Screening and Grit Removal

The combination unit where the screenings and grit will be removed will come equipped with a package controller from the manufacturer. In case of a failure of the combination unit an overflow emergency bypass line with an inline grinder is to be installed. The in-line grinder will be utilized in the event that a bypass of the combination unit occurs due to a failure or blockage of the unit that trips the high alarm and initiates grinder

operation. To allow time to avoid any potential channel overflows, a high-high level alarm will be tied into the IPS to suspend influent pumping until it is overridden by the IPS high-high level alarm condition. The following alarms and indicators, as a minimum, will be tied into the SCADA system:

- Indicators – channel level, flow indicator, flow totalizer, equipment run statuses
- Alarms – high-level, high-high level, individual equipment faults

4.12.3 Secondary Treatment

The secondary treatment system is comprised of two sequencing batch reactor (SBR) basins and a post-equalization basin. The specific controls for the system, including cycle timing, motive pumping, blower and aeration controls, and sludge wasting, are the responsibility of the selected SBR system manufacturer, Siemens Jet-Tech. A copy of the Jet-Tech control strategy can be found with the manufacturer's information provided separately from this report. For this design, the control system provided by Siemens Jet Tech will be required to contain the following indicators and alarms, as a minimum:

- Indicators – SBR pH, SBR DO, SBR ORP, SBR phase, SBR level, decant valves status, blower valves status, EQ basin level, equipment run statuses
- Alarms – SBR low DO, high level, SBR low level, decant valve close failure, EQ basin high level, individual equipment faults

4.12.4 Tertiary Treatment

The tertiary filters will be automatic backwash filters that include sand or anthracite media and use water backwash or air scour for media cleansing. The specific controls for the system are the responsibility of the system provider and will be contained in a package controller. The following alarms and indicators, as a minimum, will be tied into the SCADA system:

- Indicators – influent flow, influent turbidity, mud-well level, filter level, backwash status, equipment run statuses
- Alarms – mud-well high level, filter high level, high level differential, individual equipment faults

4.12.5 UV Disinfection

The UV system for Phase I is comprised of one channel containing 4 banks of ultraviolet bulbs and includes a fully automated cleaning system. The UV system package controller and power panels will be housed in weatherproof enclosures located near the reactor units. The specific controls for the system are the responsibility of the system provider and will be contained in the package controller. The following alarms and indicators, as a minimum, will be tied into the SCADA system:

- Indicators – UV channel level, UV bank statuses
- Alarms – UV channel high level, UV channel low level, UV bank faults

4.12.6 Aerobic Digestion

The aerobic digester process equipment consists of aeration blowers, coarse air bubble diffuser grids, digested sludge pumps, and a mechanism for decanting. The supernatant will be decanted from the sludge digester and returned to the head of the plant via the drain manhole pump station. The following alarms and indicators, as a minimum, will be tied into the SCADA system:

- Indicators – digester level, equipment run statuses
- Alarms – digester high-level, individual equipment faults

4.12.7 Biosolids Dewatering

The solids dewatering centrifuge will be initiated by the operators to produce a dry cake that will pass a Paint Filter Test as required for landfill disposal. The centrifuge will be installed on a mezzanine within the solids handling, and this elevated location will facilitate removal of the cake. The dewatered sludge cake will drop down a chute into a disposal container below located near an overhead door to allow truck access and dewatered sludge cake removal. The specific controls for the system, including the centrifuge and polymer subsystems, are the responsibility of the system provider and will be contained in the package controller. The following alarms and indicators, as a minimum, will be tied into the SCADA system:

- Indicators – centrifuge run status, polymer run status
- Alarms – centrifuge equipment faults, polymer equipment faults

4.12.8 Tertiary Pump Station

The tertiary pump station is be located downstream of the UV disinfection channel and will consist of a standard below-grade wetwell with three vertical turbine pumps connected through a distribution manifold. Butterfly valves will be installed between the pumps to allow one of the pumps to be used as a redundant unit for each system and to provide isolation of each pump for maintenance or replacement. The pumps will be controlled on a rotating lead-lag configuration with manual standby and variable frequency controllers set to maintain a system pressure range. The pump station will automatically switch off at the clear well low level set point and the pressure in the system will be maintained by the hydropneumatic tank system. The hydropneumatic system will consist of a tank and pneumatic pump system from one system supplier and will be controlled by that supplier's package control system. The following alarms and indicators, as a minimum, will be tied into the SCADA system:

- Indicators – flow, system pressure, equipment run status
- Alarms – high system pressure, low system pressure, individual equipment faults

4.12.9 Drain Manhole Pump Station

A drain manhole pump station pumps plant return flows back to the head of the facility, including flows from the screening/grit combination unit, digester, filters, solids handling, and odor control systems. The drain manhole pump station is to contain two submersible pumps, one for duty and one for standby. The pump station is to be controlled on a fill and draw configuration based on a low-level startup and high-level shutdown. The following alarms and indicators, as a minimum, will be tied into the SCADA system:

- Indicators – level, pressure, equipment run status
- Alarms – low-low level, high-high level, high pressure, individual equipment faults

5.0 PERMITTING

This purpose of this section is to identify the environmental permits that are likely to be required for the HUC NE Campus 1 WRF. For a wastewater facility of this size with full solids handling capabilities, an effluent reuse system, groundwater recharge facilities, and surface discharge, it is anticipated that the following environmental permits will be required prior to or concurrent with the design:

- Aquifer Protection Permit (APP) – ADEQ
- Reclaimed Water (Reuse) Permit – ADEQ
- Arizona Pollution Discharge Elimination System (AZPDES) Permit - ADEQ
- Underground Storage Facility (USF) Permit – ADWR
- Water Storage Permit (WSP) – ADWR
- *Approval to Construct Permit – MCESD*
- *Approval of Construction – MCESD*
- *Special Use Permit – MCPDD*

The last three of these, the construction permits from MCESD and the Special Use zoning permit from MCPDD (shown in italics), will be design-build team or engineering and hydrogeological consultants under a separate environmental permitting contract. The following paragraphs provide a breakdown describing the requirements for each permit.

5.1 Aquifer Protection Permit (APP)

According to the Arizona Department of Environmental Quality (ADEQ), you need to obtain an Aquifer Protection Permit, or APP, if you own or operate a facility that discharges a pollutant either directly to an aquifer or to the land surface or the vadose zone (the area between an aquifer and the land surface) in such a manner that there is a reasonable probability that the pollutant will reach an aquifer. A water reclamation facility, such as the one planned at HUC NE Campus 1, falls into this category.

According to ADEQ, the most critical three pieces of information that are needed for an APP Application include the following:

1. BADCT - The applicant must show that the best available demonstrated control technology (BADCT is pronounced 'BADCAT') will be used by the facility.
2. The applicant must show that aquifer water quality standards (AWQS) will not be violated in the aquifer at a point of compliance as a result of discharge from the facility. If the level of a pollutant in the aquifer already exceeds the AWQS at the time of permit issuance, the aquifer must not be further degraded.
3. The applicant must demonstrate financial and technical capability to complete the project.

The HUC NE Campus 1 WRF APP Permit application was first filed in October 2005. Review of the application by ADEQ was delayed by the ongoing 208 Amendment process which was completed in December 2007, and by the ongoing Special Use Permit process which is due to be complete in July 2008. Substantive review of the

HUC NE Campus 1 WRF APP application was started in June 2008 and an APP is expected to be issued by April 2009.

5.2 Reclaimed Water (Reuse) Permit

The reuse of the effluent from the wastewater plant for golf course irrigation or aquifer recharge will require an approved Type 2 Reclaimed Water Permit from ADEQ for direct reuse of Class A+ reclaimed water. To comply with this requirement, a Notice of Intent will be submitted to ADEQ. The permit application will require the following information:

- Applicant Information
  - General information
  - Name, address, and phone number of applicant contact and compliance contact,
- End User/Reuse Site Information:
  - Location of the reuse site(s) including county, Township, Range, Section, and Latitude and longitude of the approximate center point for the reuse site(s)
  - Description of the reuse activity, including type of vegetation being irrigated (turf, trees, shrubs, alfalfa, etc), and approximate acreage (if applicable).
  - A map showing the location of the reuse site(s).
  - A statement from the reclaimed water supplier acknowledging use of reclaimed water under this NOI.
  - A statement that permittee shall post signs as specified in R18-9-704
- Reclaimed Water Information
  - Facility information
  - Aquifer Protection Permit information

The reuse permit will be pursued at the end of the construction phase.

5.3 AZPDES Permit

On Dec. 5, 2002, Arizona became one of 45 states with authorization from EPA to operate the National Pollutant Discharge Elimination System (NPDES) Permit Program (Section 402 of the Clean Water Act) on the state level. Under the Arizona Pollutant Discharge Elimination System (AZPDES) Permit Program, all facilities that discharge pollutants from any point source into waters of the United States (navigable waters) are required to obtain or seek coverage under an AZPDES permit.

To permit discharge to the Hassayampa River, even on an emergency basis, the HUC NE Campus 1 WRF will be required to have an individual AZPDES permit. According to ADEQ, the permit application must contain, if applicable, the following information:

- Cover page - The name and location of the permittee, discharge locations, and a statement authorizing the discharge;

- Effluent limitations and other monitoring requirements - Based on technology-based and water quality standards, these are the primary mechanism for controlling discharges of pollutants to receiving waters and characterizing waste streams
- Monitoring and reporting requirements - Specifies sample collection and analysis and reporting results to evaluate wastewater treatment efficiency and determine compliance with permit conditions
- Biosolids - For the management of sludge at wastewater plants that treat domestic wastewater
- Special conditions - Additional requirements to supplement effluent limitations. Examples include mixing zones, best management practices, ambient monitoring programs, toxicity evaluations, and compliance schedules
- Standard conditions - Pre-established conditions that apply to all AZPDES permittees and outline the administrative, legal and procedural requirements of the program.

The HUC NE Campus 1 WRF AZPDES Permit application was first filed in 2006. Review of the application by ADEQ was delayed by the ongoing 208 Amendment process which was completed in December 2007. The HUC NE Campus 1 WRF AZPDES application was issued on June 20, 2008.

5.4 Underground Storage Facility (USF) Permit

The construction and use of the recharge facilities associated with the HUC NE Campus 1 WRF will require an approved Underground Storage Facility (USF) permit. A USF permit allows the permit holder to operate a facility that stores water in the aquifer. The criteria a USF must meet in order to be permitted include:

1. The project must be hydrologically feasible;
2. The applicant must have financial and technical capability;
3. The applicant has agreed in writing to obtain any required floodplain use permit from the county flood control district before beginning any construction activities;
4. The project may not cause unreasonable harm to land or other water users within the area of impact; and
5. The project will continue to be monitored to ensure storage does not cause the migration of poor quality water.

The HUC NE Campus 1 WRF USF Permit application will be pursued prior to the construction and operation of recharge facilities.

5.5 Water Storage Permit

A Water Storage (WS) Permit allows the permit holder to store water at a USF or GSF. In order to store water, the storer must provide to ADWR evidence of its legal right to the source water proposed for recharge. A contract for CAP water must be submitted to the Department prior to storing CAP water obtained pursuant to that contract, and water storage must occur at a permitted facility. The permit application will require the following information:

- Applicant Information
- Storage Facility Information
- Consent to Water Storage

- Type of Source Water
- Non-Recoverable Water
- Permit Duration
- Legal Right to Source Water
- Agreement to Comply with Groundwater Savings Facility Plan of Operation

The HUC NE Campus 1 WRF WSP application will be filed prior to the construction and operation of recharge facilities.

5.6 Approval to Construct/Approval of Construction

An Approval to Construct must be obtained from MCESD before any construction of the WRF can begin. The Approval to Construct process includes a review of all project documentation including the Design Report and Design Drawings. When the Approval to Construct is issues, construction of the WRF can begin. When construction is complete and a start-up plan is developed for the facility, the Approval of Construction process can be started. In order to obtain the Approval of Construction, MCESD must review and approve the start-up plan, inspect the facility, approve the validation and commissioning of the facility, and approve the O&M Manual. The final step in obtaining the Approval of Construction is the submittal of As-Built Drawings.

5.7 Special Use Permit

A Special Use Permit is required for all wastewater treatment facilities in Maricopa County. This is a zoning permit that allows for the construction and operation of industrial activity in an area that has not been previously zoned for industrial activity. The Special Use Permit process involves an extensive Citizen Participation Program that includes notifying adjacent property owners and stakeholders in the area. The review process also includes a Site Plan review, Narrative Report, Traffic Study, and Drainage Study. The HUC NE Campus 1 WRF Special Use Permit was approved by the Maricopa County Board of Supervisors on June 4, 2008. The Special Use Permit is expected to be issued by July 7, 2008.

6.0 RECLAIMED WATER DISPOSAL

Global Water and all subsidiary companies, including HUC, operate under a Total Water Management concept. This management concept intends to maximize the use of recycled water, thereby conserving potable water resources. As such, the utilities are investing heavily in recycled water infrastructure. Under this management approach recycled water is used in the following priority sequence: reuse, recharge, and discharge (if required).

The reclaimed water disposal strategy for the Hassayampa Ranch WRF includes of the following:

- Direct Reuse at the planned Hassayampa Ranch Golf Course and lakes
- Direct Reuse for irrigation of right-of-way landscaping, common areas, and parks in the Hassayampa Ranch development
- Direct reuse sales for construction water, commercial or agricultural uses
- Recharge via injection wells on the WRF site
- Discharge to the Hassayampa River

6.1 Reuse

Direct reuse is the top priority for the disposal of recycled water produced by the Hassayampa Ranch WRF. The recycled water is planned to be used for irrigation of the planned Hassayampa Ranch golf course, community common areas, schools, parks, residential and right-of-way landscaping, and for the development of recreational/aesthetic lakes. HUC requires, as part of development agreements, that all serviced communities maximize the use of reclaimed water throughout their development areas. At this time, specific reuse locations have not been identified because the Hassayampa Ranch DMP and preliminary plat are not complete.

6.2 Recharge

Reuse water will be recharged to the aquifer using injection wells when production exceeds reuse demands. Recharge is an important element of an integrated water approach in the west valley and the addition of Class A+ reclaimed water to the aquifer will improve groundwater quality and help ensure the viability of the water resources in the area. HUC currently has an APP permit application underway and in the substantive review phase. The APP permit application includes the construction and use of recharge wells on the WRF site.

6.3 Discharge

When the reclaimed water volume exceeds reuse and recharge demands, it will be discharged to the Hassayampa River through the AZPDES discharge permit. Discharges are expected to occur infrequently and mainly in the winter months when cold temperatures or continuous rainfall reduce reuse demand or when maintenance is required on the recharge facility.

APPENDIX A

SBR Manufacturer Design Calculations

SIEMENS

4/2/2008

HUC NE Campus 1 WRF

OMNIFLO® SEQUENCING BATCH REACTOR

DESIGN CALCULATIONS

Rev. No. 0
Prep. By: KSG

SIEMENS FILE NO. JTP-08xxx

Two Tank SBR

I. DESIGN PARAMETERS:

Influent & Effluent Characteristics			English Units	Metric Units
Flow	=	0.50	MGD average	1,893 m^3/d
Peak Instantaneous	=	1.50	MGD *	5,678 m^3/d
COD to SBR	=	600	mg/l total*	
	=	432	mg/l soluble	
Effluent COD	<		mg/l *	
	=		***not required***	
COD removed	=	2,189	lbs./day	993 kgs/d
Peak sustained COD load	=	900	mg/l, for not more than	
		3	consecutive days	
BOD to SBR	=	300	mg/l	
	=	1,251	lbs./day	567 kg/d
Effluent BOD	<	10	mg/l	
	=	***10***	***mg/l required***	
BOD removed	=	1,230	lbs./day	558 kg/d
TSS to SBR	=	300	mg/l	
	=	1,251	lbs./day	567 kg/d
Inert TSS fraction	=	40	% *	
Effluent TSS	<	10	mg/l	
	=	***10***	***mg/l required***	
	=	21	lbs./day	9 kg/d

(*notes values assumed by Siemens, which must be verified or revised by client or his designated agent)

Influent dissolved solids, TD	=	500	mg/l*	
Influent NH4-N	=	30	mg/l*	
	=	125	lbs./day	57 kg/d
Influent TKN	=	45	mg/l*	
	=	188	lbs./day	85 kg/d
Effluent NH3-N	<	1.0	mg/l	
	=	***1.0***	***mg/l required***	
			Assumed standard uninhibited nitrification rate*	
Effluent Total Nitrogen	<	8	mg/l	
	=	***8***	***mg/l required***	
			Assumed standard uninhibited nitrification rate*	
Influent Phosphorus	=	9	mg/l	
	=	36	lbs./day	16 kg/d
Effluent Phosphorus	<	2.0	mg/l	
	=		***not required***	
Winter Temperature (min.)	=	12 °C	*	
Summer Temperature (max	=	25 °C	*	

Reactor & Process Characteristics

Design MLSS	=	3,000	mg/l @ TWL	
Hydr. Retention Time provid	=	1.58	days	37.8 hours
Aerobic Sludge Age (SRTox	=	8.5	days min. SRTox	
System SRT	=	17.0	days	
Biosolids yield factor	=	0.25	gVSS/gCODr/d	
	=	0.54	gVSS/gBODr/d	
Aerobic or Oxic F:M	=	0.25	gCOD/gMLSS/d	
	=	0.13	gBOD/gMLSS/d	
System F:M	=	0.06	gBOD/gMLSS/d	
Elevation	=	1,500	ft. MSL*	457 m
Average barometric pressur	=	13.91	psia*	96 kPa

II. PROCESS PARAMETERS:

Average COD removed	=	2,189	lbs./day	993 kg/d
Maximum COD removed	=	3,440	lbs./day	1,560 kg/d
Minimum SRTa - peak loadi	=	7.3	days	

(*notes values assumed by Siemens, which must be verified or revised by client or his designated agent)

Avg biosolids yield, dXv	=	547	lbs./day*	248 kg/d
Avg net sludge yield (bio+ine	=	1,039 1,156	lbs/d based on CODr* lbs/d based on BODr*	471 kg/d 524 kg/d
Maximum sludge yield	=	1,352	lbs/d based on CODr*	613 kg/d
Required aerobic mass	=	9,853	lbs MLSS	4,469 kgs
Required aerobic volume	=	0.39	MG	1,491 m^3
Aerated portion of cycle	=	50.0	%	
Required total SBR volume	=	0.79	MG	2,981 m^3

III. SBR BASIN DESIGN:

Number of SBR basins	=	2		
If Rectangular Basins are used :				
Length/Width Ratio	=	1.4 : 1		
Length	=	65	ft.	19.81 m
Width	=	45	ft.	13.72 m
If Round Tanks are used :				
Diameter	=	61	ft.	18.61 m
Maximum Water Level	=	18.0	ft.	5.49 m
Nominal Bottom Water Leve	=	15.1	ft.	4.62 m

***(The minimum hydraulic water level is typically well below nominal BWL)*

TWL at Design Average Flo	=	18.0	ft.	5.49 m
Total Volume in SBR's	=	0.79	MG	2,981 m^3
Total Retention Time in SBF	=	37.8 1.58	hrs. days	

(*notes values assumed by Siemens, which must be verified or revised by client or his designated agent)

IV. OXYGEN REQUIREMENT:

First Estimate :

lbs. O2/lb. BOD removed	=	1.31	kg O2/kg BOD removed	
lbs. O2/lb. TKNoxidized	=	4.6	kg O2/kg TKNoxidized	
lbs. O2/lb. NO_3x denitrified	=	-2.86	Denite efficiency =	60 %
Actual Oxygen Req'd, AOR	=	2,017	lbs. O2/day	915 kg/d

Second Estimate :

Check AOR estimate against mass balance :
(TKNox may be included in COD, assume not)

AOR = CODi - CODw - CODes + 4.6*TKNox - 2.86*NO3Ndn

where :

CODi = influent	=	2,502 lbs./day	1,135 kg/d
CODw = wasted	=	657 lbs./day	298 kg/d
CODes = eff solubl	=	313 lbs./day	142 kg/d
TKNox** = oxidized	=	140 lbs./day	63 kg/d
NO_3Ndn = denitrifiec	=	71 lbs./day	32 kg/d

The oxygen requirement determined by mass balance is:

AOR = 1,973 lbs./day 895 kg/d

Differences in AOR values calculated is due to assumptions for sludge yield, for effluent COD & BOD, and for oxidation of NH3-N in the COD analysis. Precise determination of AOR requires a detailed plant or pilot study. Use highest value in lieu of better data. Therefore :

DESIGN AOR = 2,017 lbs. O2/day 915 kg/d

Convert Process, or Actual Oxygen Requirement (AOR), to Standard Oxygen (SOR) :

Conversion Formula from ASCE Manual of Practice :

$$SOR = \frac{AOR * Cs}{a * (ßCsd - DO) * Ø^{(T-20)}}$$

Where:

Cs = DO saturation at Stnd Conditi
= 9.07*(1+0.4*D/34)
= 10.99 mg/l

Csd = DO saturation at design conditions
= Cst*(Fe+0.4*D/34)
where : Cst = DO saturation at liquid Temp & 1 sea level
= 8.24 mg/l

Elev. Factor, Fe = 0.94 Therefore, Csd = 9.53 mg/l

(*notes values assumed by Siemens, which must be verified or revised by client or his designated agent)

Alpha, a = 0.85 *		SWD, D = 18.0 ft	
D.O., mg/l = 2.0 mg/l		Beta, ß = 0.95 *	
Liquid Temp, T = 25 °C		Theta, Ø = 1.024	

Therefore:

Standard Oxygen Required, SOR = 3,285 lbs. O2/day 1,491 kg/d

V. PROCESS DESIGN:

CYCLE TIMES

No. of batches/day/SBR	=	4.0	per SBR	
Maximum Fill time	=	3.0	hrs. per basin	
Complete Cycle time	=	6.0	hrs. per basin	
Fill time at Design Flow	=	3.0	hrs.	
Anoxic Fill time	=	1.5	hrs.	50 % *of FILL is anoxic.*
Aerated Fill	=	1.50	hrs.	
React time	=	1.50	hrs.	50 % *of cycle is aerated.*
Settle Time	=	0.75	hrs.	
Decant time	=	0.50	hrs.	
Idle time	=	0.25	hrs.	

VI. AERATION SYSTEM DESIGN:

Aerator elevation	=	2.5	ft.	0.76 m
Nozzle Cant	=	30	°	
Avg aerator submergence	=	15.1	ft.	4.62 m
Total aeration time	=	3.00	hrs./cycle	
	=	12.0	hrs./basin/day	
SOR for aeration design	=	137	lbs./hr/basin	62 kg/hr
Design gassing rate	=	40.0	SCFM / jet	1.13 m^3/min/jet
Site gassing rate	=	40.9	ICFM / jet	1.16 m^3/min/jet

(*notes values assumed by Siemens, which must be verified or revised by client or his designated agent)

Absorption efficiency	=	22.8	%	
Design air flow	=	579	SCFM	16 m^3/m
Jets required per basin	=	14	Model 40 Jets	
Jet headers per basin	=	1	Type : **B** Orientation : **L**	B = BDM, C = CM L = Length, W = Width
Jets per header	=	15	Model 40 Jets	

VII. BLOWER DESIGN CALCULATIONS:

Operating blowers	=	1	per aerating basin		
Type of Blowers :	=	1	*1 = Rotary, positive displacement* *2 = Multistage Centrifugal* *3 = Variable-vane centrifugal*		
Total Number of Blowers	=	2	including a spare		
Air flow per blower	=	579	SCFM	984 m^3/hr	
Inlet losses	=	0.3	psig *	2.07 kPa	0.02 bar
Net inlet pressure	=	13.61	psia (absolute)	93.83 kPa	0.94 bar
Discharge piping losses	=	0.7	psig *	4.83 kPa	0.05 bar
Static head + Aerator loss	=	6.66	psig average	45.89 kPa	0.46 bar
	=	6.81	psig at Max. W.L.	46.95 kPa	0.47 bar
	=	5.57	psig at Min. W.L.	38.43 kPa	0.38 bar
Total discharge pressure	=	7.66	psig average	52.78 kPa	0.53 bar
		7.81	psig maximum	53.85 kPa	0.54 bar
		6.57	psig minimum	45.32 kPa	0.45 bar
Design ambient temp.	=	100	°F maximum	38 °C	
		0	°F minimum	-18 °C	
Site air flow required	=	663	ICFM average	18.79 m^3/min	
Equiv. sea level pressure	=	8.66	psig average	59.68 kPa	0.60 bar
Nominal blower efficiency	=	64	% *		
BHp per blower	=	28.8	BHp/Blower	21.5 BkW 23.8 kW @ 90% ME	
Blower BHp/aerating basin	=	28.8	BHp/Basin	21.5 BkW 23.8 kW @ 90% ME	

(*notes values assumed by Siemens, which must be verified or revised by client or his designated agent)

VIII. PUMP DESIGN CALCULATIONS:

Number of pumps	=	1	per basin	
Type of Pumps :	=	1	*1 = Dry Pit Centrifugal* *2 = Submersible Centrifugal* *3 = Submersible Propeller*	
Total number of pumps	=	2		
Flow per pump	=	2,746	GPM	173.2 l/s
Required jet head	=	17	ft.	5.2 m
System headloss	=	4	ft.*	1.2 m
Total pump head	=	21	ft.	6.4 m
Assumed pump efficiency	=	76	% *	
BHp per pump	=	19.2	BHp/Pump	14.3 BkW 15.9 kW @ 90% ME
Total pump BHp/basin	=	19.2	BHp/Basin	14.3 BkW 15.9 kW @ 90% ME

IX. AERATION SYSTEM SUMMARY:

Standard Oxygen Required	=	3,285	lbs./day	1,493 kg/d
Avg. BHp for 24 hrs.	=	48	BHp**	40 kW
Assume Cost of Power	=	0.05	$/kW	
Max. Annual Cost of Power*	=	17,398	$/yr, (assuming 90% motor efficiencies)	

** *Actual power draw is typically less due to Demand-Proportional aeration process control*

(*notes values assumed by Siemens, which must be verified or revised by client or his designated agent)

X. DECANTER SIZING:

Cycles per day	=	8		
Volume per decant	=	62,500	Gallons at Design Flo\	237 m^3
		62,500	Gallons Decantable	237 m^3
Decant time	=	0.50	hrs.	
Average decant flow	=	2,083	GPM	131.4 l/s

(*notes values assumed by Siemens, which must be verified or revised by client or his designated agent)

McBride Engineering Project

AEROBIC DIGESTER AERATION SYSTEMS

DESIGN CALCULATIONS

SIEMENS FILE NO. JTP-08xxx

24 Day SRT

I. DIGESTER DESIGN PARAMETERS:

		English Units	Metric Units
Sludge Production Estimate			
On a COD Basis :			
COD removed	=	2,189 lbs/d	995 kg/d
Avg biosolids yield, dX	=	547 lbs/d * Assumes yield = 0.25 g/g	248 kg/d
Avg net yield (bio+inerts)	=	1,039 lbs/d based on CODr*	471 kg/d
Design sludge production	=	1,156 lbs/day (bio+inert TSS)	524 kg/d
On a BOD basis :			
BOD removed	=	1,230 lbs./day	558 kg/d
# sludge/# BOD rem.	=	0.94	
Avg net yield (bio+inerts)	=	1,156 lbs/day	524 kg/d
Waste sludge concentration	>	8,500 mg/l	
Gravity Thickened ? (Y or N	=	Y	
Digester sludge concentratic	=	2 %	
Digester sludge production	=	6,933 gpd	26 m^3/d
Elevation	=	1,500 ft. MSL	457 m
Avg. barometric press.	=	13.91 psia	95.9 kPa

(*notes values assumed by Siemens, which must be verified or revised by client or his designated agent)

II. DIGESTER BASIN DESIGN:

Number of digesters	=	1		
Solids Retention Time	=	**23.8**	days SRT	
If Rectangular Basins are used :				
Length/Width Ratio	=	3.82	: 1	
Length	=	65	ft.	19.81 m
Width	=	17	ft.	5.18 m
If Round Tanks are used :				
Diameter	=	38	ft.	11.44 m
Side Water Depth	=	20	ft.	6.10 m
Total Digester Volume	=	0.17	MG (Nominal)	626 m^3

III. DIGESTER OXYGEN REQUIREMENT:

Percent VSS	=	75 %		
Liquid Temperature	=	20 °C		
% VSS reduction, Expectec	=	39.0 %		
% VSS reduction, Design	=	39.0 %		
Lbs. O2 / lb. VSS destroyed	=	1.42		
Actual Oxygen Required	**=**	**480**	**lbs./day**	**218 kg/d**
	=	**20**	**lbs./hr.**	**9.1 kg/hr**

Convert Process, or Actual Oxygen Requirement (AOR), to Standard Oxygen (SOR) :

Conversion Formula from ASCE Manual of Practice :

$$SOR = \frac{AOR * Cs}{a * (ßCsd - DO) * Ø^{(T-20)}}$$

Where:

Cs = DO saturation at Stnd Conditi
= 9.07*(1+0.4*D/34)
= 11.20 mg/l

Csd = DO saturation at design conditions
= Cst*(Fe+0.4*D/34)
where : Cst = DO saturation at liquid Temp & sea level
= 9.07 mg/l

(*notes values assumed by Siemens, which must be verified or revised by client or his designated agent)

Elev. Factor, Fe	= 0.94	Therefore, Csd	= 10.70
Alpha, a	= 0.75 *	SWD, D	= 20.0 ft
Dissolved O2	= 2.0 mg/l	Beta, ß	= 0.95 *
Liquid Temp, T	= 20 °C	Theta, Ø	= 1.024

Therefore:

Standard Oxygen Required, SOR = 878 lbs./day 399 kg/d

IV. DIGESTER AERATION AND MIXING SYSTEM DESIGN:

Aerator elevation	=	1.0	ft.	0.30 m
Nozzle Cant	=	0	°	
Aerator submergence	=	19.0	ft.	5.79 m
SOR for aeration design	=	37	lbs./hr/basin	16.6 kg/hr
Design gassing rate	=	20.0	SCFM /Diffuser	0.57 m^3/min/diffuser
Site gassing rate	=	20.5	ICFM /Diffuser	0.58 m^3/min/diffuser
Absorption efficiency	=	14.3	%	
Diffusers req'd for aeration	=	12.8	Diffusers per basin	
Mixing Power required	≥	31.7	30 scfm/1000 ft3	
Add'l diffusers req'd for mixi	=	21.4	Diffusers per basin	
Diffuser grids per basin	=	1		
Diffusers per grid	=	35	Diffusers per basin	
Design air flow	=	700	SCFM per basin	19.8 m^3/min

V. DIGESTER BLOWER DESIGN CALCULATIONS:

Operating blowers	=	1	per digester
Type of Blower	=	1	*1 = Rotary, positive displacement* *2 = Multistage Centrifugal* *3 = Variable-vane centrifugal*
Total Number of Blowers	=	2	*including a spare*

(*notes values assumed by Siemens, which must be verified or revised by client or his designated agent)

Air flow per blower	=	700	SCFM	19.8	m^3/min
Inlet losses	=	0.3	psig *	2.1	kPa
Blower inlet pressure	=	13.61	psia (absolute)	93.8	kPa
Discharge piping losses	=	0.7	psig *	4.8	kPa
Static head + Aerator loss	=	8.33	psig average	57.4	kPa
Blower discharge pressure	=	9.33	psig average	64.3	kPa
Design ambient temp.	=	100	°F maximum	37.8	°C
		0	°F minimum	-17.8	°C
Site air flow required	=	802	ICFM average	22.7	m^3/min
Equiv. sea level pressure	=	10.56	psig average	72.8	kPa
Nominal blower efficiency	=	64	% *		
BHp per Blower	=	41.1	BHp/Blower	30.7	BkW
				34.1	kW @ 90% ME
Blower BHp/aerating basin	=	41.1	BHp/Basin	30.7	BkW
				34.1	kW @ 90% ME

VI. DIGESTER PUMP DESIGN CALCULATIONS (NOT REQUIRED):

VII. DIGESTER AERATION SYSTEM SUMMARY:

Standard Oxygen Required	=	878	lbs./d		399.1	kg/d
Avg. BHp for 24 hrs.	=	41	BHp		34.1	kW
				Daily Usage	818	kWhrs/d
Assume Cost of Power	=	0.05	$/kW			
Max. Annual Cost of Power	=	14,931	$/yr, (assuming 90% motor efficiencies)			

(*notes values assumed by Siemens, which must be verified or revised by client or his designated agent)

APPENDIX B

Technical Literature on Major Process Equipment

12

Maricopa County

Environmental Services

Water and Waste Management Division

1001 N. Central Ave., Suite 150
Phoenix, AZ 85004
Phone: (602) 506-6666
Fax: (602) 506-6925
TDD: 602 506 6704
www.maricopa.gov/envsvc

Date: July 30, 2008
Owner: Hassayampa Utility Company, Inc.

MCESD Project #: 2011645
System ID #: 04-37-196

INTERIM
CERTIFICATE OF APPROVAL TO CONSTRUCT WITH STIPULATIONS

PROJECT DESCRIPTION: Hassayampa Ranch Water Reclamation Facility (WRF), Campus #1, Phase 1. The project will serve approximately 2,050 acres of land that is predominantly north of Indian School Road and east of 343rd Avenue. The Phase 1 project includes a 0.50 MGD WRF. The ultimate capacity of the plant is projected to be 10 MGD. The work will be performed by a design-build contractor.

The work includes construction of: an off-site influent lift station (designed by others); a combination screening/grit removal unit; a bypass grinder; two sequencing batch reactors (SBR) with a total volume of 770,000 gallons, floating decant mechanisms, two 580-cfm blowers, and two 2,750-gpm jet motive pumps; a 118,000-gallon post-equalization basin with two 700-gpm submersible pumps; three pulsed-bed sand filters with provisions for coagulant addition; an ultraviolet (UV) disinfection system with a single channel and four banks of bulbs; and a tertiary pump station with three 500-gpm pumps.

The system will have: a 145,000-gallon aerobic digester with two 40-HP blowers; a centrifuge with 60-gpm feed rate for solids dewatering; and a 13,800-scfm, 3-stage odor control scrubber that will serve the headworks, SBR basins, aerobic digester, and solids handling equipment. There will be an 800-kW emergency generator.

LOCATION: Buckeye, Maricopa County
East of the NEC of Indian School Road and 331st Avenue
T2N, R5W, Sec 22

PROJECT OWNER: Hassayampa Utility Company, Inc.
Attn: Jason Bethke, P.E.
21410 N. 19th Avenue, Suite 201
Phoenix, AZ 85027

Pursuant to Maricopa County Environmental Health Code Chapters II and V, interim approval to construct the above-described facilities as represented in the approved plan documents on file with the Maricopa County Environmental Services Department is hereby given subject to the following provisions:

1. This certificate is issued based on submission of: An Application for Approval to Construct prepared by the Owner dated 5/28/08; an Engineering Design Report prepared by Brian McBride, PE (#33441), dated 7/28/08; and final civil plans and design-build concept drawings prepared by Brian McBride, PE (#33441), dated 7/3/08.

2. This Interim Certificate of Approval of Construction allows the Owner to perform mass grading and other site work for the WRF while the contractor completes the detailed design of the facilities. The detailed design shall conform in all respects to the approved Engineering Design Report and design-build concept drawings, and it shall be submitted to and approved by the Department prior to commencing construction of the facilities.

3. Any change in the approved design that may affect capacity, quality, flow, location or operational performance of the system shall be submitted to this Department for review, and Department approval shall be obtained prior to undertaking the work affected by the change.

4. If the Owner wishes to commence operations using a vault and haul (V&H) scheme, it shall submit an operations plan to the Department for approval prior to the start of V&H. If V&H is approved, the Owner shall provide the Department with daily records showing the amount of wastewater hauled from the site, sent on a weekly basis. All vehicles used for vault and haul shall be licensed by the Department.

5. An Operation and Maintenance Manual for the new facilities, prepared in accordance with Engineering Bulletin #11 and specific to this facility, shall be submitted to and approved by this Department prior to granting Approval of Construction and startup.

6. The Owner shall provide the Department with a copy the Notice of Intent it has submitted to ADEQ for a Type 2 or Type 3 Reclaimed Water General Permit and/or a copy of its application for an Underground Storage Facility Permit/Storage Permit submitted to ADWR prior to the Department granting a Certificate of Approval of Construction and startup.

7. A Request for a Certificate of Approval of Construction, together with an Engineer's Certificate of Completion (including all testing documentation), and a full set of sealed, engineered as-built plans, shall be submitted to this Department prior to granting Approval of Construction and startup.

8. A final construction inspection of the project shall be scheduled with the Department prior to granting Approval of Construction and startup.

9. The facility shall successfully complete a minimum 30-day performance test to demonstrate that all systems are operating properly and that the facility is meeting all regulatory requirements prior to the Department granting Approval of Construction and startup. Testing shall be performed for the parameters, at the locations, and at the frequencies listed below. The test requirements are general and, with Department approval, they may be modified to suit the layout and processes of the facility.

30-day Initial Performance Testing

Parameter	Sampling Point	Sample Type	Sampling Frequency
Flow (gal/day)	Influent	Metered Value	Daily Total
BOD_5 (mg/l)	WRF Influent and Effluent	Discrete or composite	Weekly
COD (mg/l)	WRF Influent and Effluent	Discrete or composite	Weekly
TSS (mg/l)	WRF Influent and Effluent	Discrete or composite	Weekly
pH	Influent and Effluent	Discrete	Daily
Temperature (^{o}C)	Influent	Discrete	Daily
Dissolved Oxygen (mg/l)	Each SBR	Discrete	Daily
Settleability	Each SBR	Discrete	Daily
MLSS, (mg/l)	Each SBR	Discrete	Daily
MLVSS (mg/l)	Each SBR	Discrete	Weekly
WAS Flow (gal/day)	All Pumped Locations	Total Gallons Pumped	Per Removal
Turbidity (NTU)	WRF Effluent	Continuous	Report the Daily Average and Maximum Value
Fecal Count (MPN/100 ml)	WRF Effluent	Per Aquifer Protection Permit	
Total Nitrate (mg/l)	WRF Influent and Effluent	Per Aquifer Protection Permit	

10. A Grade 4 daily on-site wastewater treatment operator, certified by the Arizona Department of Environmental Quality, shall oversee the efficient operation and maintenance of the facilities. The Chief Operator or Superintendent in direct responsible charge in the absence of the Chief Operator shall be certified at a grade no lower than one grade below the grade of the facility.

11. The wastewater treatment plant shall comply with all applicable sampling and reporting requirements.

12. The Owner or operator shall make such tests and keep such records as are necessary to assure efficient operation of the treatment works. Records of plant operation shall be transmitted to the Department monthly on forms approved by the Department.

13. Representative(s) of MCESD shall be allowed access to the site to conduct inspections of the treatment plant during reasonable hours.

14. MCESD reserves the right to modify the Approval of Construction pursuant to future state regulations.
15. A signed copy of the applicable discharge permits (APP, AZPDES, Reuse, Underground Water Storage, Air Quality) shall be submitted prior to the Department granting Approval of Construction and Startup.
16. Any reclaimed water or recharge system supplied by this plant shall be submitted to the Department for a separate Certificate of Approval to Construct and Certificate of Approval of Construction.
17. No connection shall exist between potable and non-potable water.
18. Provide appropriate signage and a hose rack for all hose bibb connections (both potable and non-potable).
19. By the time the average daily flow in the maximum month (ADMM) flow to the WRF reaches seventy percent (70%) of the facility's rated capacity (i.e. either 0.35 MGD; 875 lb/day BOD; or 1750 lbs/day COD), the Owner shall have initiated planning and design of the next expansion of the facility.
20. By the time the ADMM flow to the WRF reaches eighty percent (80%) of the facility's rated capacity (i.e. either 0.40 MGD; 1,000 lb/day BOD; or 2,000 lbs/day COD), the Owner shall have initiated construction of the next expansion of the facility.

If construction has not commenced within one year of the plan approval date, or if there is a halt in construction of more than one year, or if construction is not completed within three years, this certificate will expire.

WATER AND WASTE MANAGEMENT DIVISION

Kenneth R. James, P.E. for

By _____
Dale G. Bodiya, PE, Manager
Water / Wastewater Treatment Program

Plan Approval Date: July 30, 2008

cc: Brian McBride, PE, McBride Engineering Solutions, 6100 W. Gila Springs Place, Suite 7
Chandler, AZ 85226
Kevin Chadwick, PE, Manager, MCESD Water and Waste Management Division
Utilities Division - Engineering Section, Arizona Corporation Commission
1200 W. Washington Street, Phoenix, AZ 85007-2996
MCESD file