Southwest Transmission
COOPERATIVE, INC

P.O. BOX 2195 • BENSON, ARIZONA

ORIGINAL

0000081389

50TP

January 31, 2008

Mr. Ernest Johnson
Director, Utilities Division
Arizona Corporation Commission
1200 West Washington
Phoenix, AZ 85007

RE: Docket No. E-00000D-07-0376

Dear Mr. Johnson:

Enclosed is the Southwest Transmission Cooperative, Inc. ("SWTC") Ten Year Plan for the period 2008 – 2017. I have enclosed an original plus thirteen (13) copies pursuant to A.R.S. Section 40-360-02.

Sincerely,

James Rein
Manager of Transmission Planning

enclosures

c/ L. Huff w/o enclosures

RECEIVED
2008 JAN 31 P 4: 06
AZ CORP COMMISSION
DOCKET CONTROL

Arizona Corporation Commission
DOCKETED
JAN 31 2008
DOCKETED BY nr

Southwest Transmission
COOPERATIVE, INC

TEN-YEAR PLAN

2008 – 2017

JANUARY 2008

SOUTHWEST TRANSMISSION COOPERATIVE, INC.

TEN-YEAR PLAN

2007 – 2016

Prepared for the

ARIZONA CORPORATION COMMISSION

TRANSMISSION PLANNING

JANUARY 2008

TABLE OF CONTENTS

GENERAL INFORMATION. 4

REGIONAL PLANNING. 5

CHANGES FROM 2007 TEN-YEAR PLAN FILING 7

SECTION I – PLANNED TRANSMISSION LINES 10

Apache/Hayden to San Manuel 115 kV Line. 11

Western 115 kV Line Loop-in to Pantano 12

Saguaro to Naviska 115 kV Line 13

Valencia to CAP Black Mountain 115 kV Line. 14

CAP 115 kV Line Loop-in to SWTC Sandario 15

Marana to Avra 115 kV Line Upgrade. 16

Naviska to Thornydale 115 kV Line 17

Thornydale to Rattlesnake 115 kV Line. 18

Avra Valley to Sandario Tap 115 kV Line Upgrade 19

Sandario Tap to Three Points 115 kV Line Upgrade. 20

Hassayampa to Pinal West 500 kV Line Participation 21

Pinal West to Santa Rosa 500 kV Line Participation 22

Santa Rosa to Pinal South 500 kV Line Participation 23

Pinal West 500/345 kV Project. 24

Pinal South to Tortolita 500 kV Line 25

Marana Tap to Marana 115 kV Line Upgrade 26

CS1 to Three Points 115 kV Line. 27

CS1 to Bicknell 230 kV Line 28

Upgrade of Apache to Butterfield 230 kV Line 29

Sloan to Huachuca 230 kV Line 30

SECTION II – INTERNAL PLANNING CRITERIA AND FACILITY RATINGS 31

SECTION III – TECHNICAL STUDY REPORT 35

SOUTHWEST TRANSMISSION COOPERATIVE, INC.

TEN-YEAR PLAN

GENERAL INFORMATION

This Ten-Year Plan is submitted to the Arizona Corporation Commission ("Commission") to satisfy the requirements of section 40-360.02 of the Arizona Revised Statutes ("A.R.S."), relating to power plant and transmission line siting requirements. It outlines the plans of Southwest Transmission Cooperative, Inc. ("SWTC") to install electric facilities required to meet anticipated system growth of its Distribution Cooperative Members (Member).

This report contains transmission projects that SWTC anticipates may be constructed over the next ten-year period. As noted in A.R.S. section 40-360.02.F, the plans contained in this report are tentative information only and are subject to change at any time at the discretion of SWTC. SWTC anticipates that any changes to this plan will likely be due to changes in load forecasts, environmental constraints, and/or regulatory and legal developments. Changes of any significance that occur prior to the next Ten-Year Plan filing, will be discussed with the Commission Staff.

The report is divided into three sections, as outlined in the Table of Contents on page 2. Section I describes planned transmission lines SWTC may construct over the ten-year plan period, whose nominal rating is equal to or greater than one hundred fifteen thousand volts (115 kV). Section II contains SWTC's internal planning criteria and facility ratings, pursuant to Commission Decision #63876, dated July 25, 2001. Section III is a Technical Study Report of the planned transmission projects contained in Section I, to satisfy the requirements of paragraph C.7 of A.R.S. Section 40-360.02.

The planned transmission lines that are listed in Section I are needed to maintain system reliability and to serve load in the load areas of the SWTC Member Distribution Cooperatives. Due to the proximity of the new lines to the Member load being served, studies conducted show little impact to the overall interconnected system.

REGIONAL PLANNING

SWTC continues to participate in Regional Planning efforts in the State by involvement in the Southwest Area Transmission ("SWAT") Planning Group. SWTC is involved in the following subcommittees of SWAT: the Central Arizona Transmission EHV ("CATS-EHV"), Central Arizona Transmission HV ("CATS-HV"), Colorado River Transmission Subcommittee ("CRT"), Arizona-New Mexico EHV Subcommittee ("AZNM"), and the Southeast Arizona Transmission Study (SATS). In addition, SWTC is monitoring the efforts of the newly formed Transmission Expansion Planning Policy Committee of the Western Electricity Coordination Council (WECC), and the Southwest Expansion Planning Group (STEP).

SWTC is also an active participant in the WestConnect subregional planning process as one of the thirteen signatories to the WestConnect Project Agreement for Subregional Transmission Planning. SWTC participated in the WestConnect Planning Workshop held on October 31, 2007 and November 1, 2007 and presented its Ten-Year Transmission Plan for submittal to the WestConnect Ten-Year Transmission Plan which was approved at the January 17th WestConnect Annual Planning Meeting.

The following is a brief description of the projects that SWTC either is a participant in, or is evaluating interest in, through the Regional Planning Process, that are contemplated for completion during this Ten-Year Plan Filing (2008-2017) timeframe:

Hassayampa to Pinal West

A CEC (Case No. 124) for this project was granted in May 2004 and is for two parallel single circuit 500 kV transmission lines from Hassayampa (Palo Verde hub) to a new Pinal West Substation, which will loop in the Westwing – South 345 kV line, which has an anticipated in-service date of 2008. SWTC is a joint participant in the project and Salt River Project (SRP) is the project manager.

Pinal West to Southeast Valley/Browning

A CEC (Case No. 126) for this project was issued in August 2005, with an amendment to the CEP approved in November 2005, for construction of a 500 kV line from Pinal West to Browning, with the segment from Santa Rosa to the proposed Pinal South Substation being proposed as a double-circuit 500/230 kV line, as is a segment of the Pinal South to the Southeast Valley Substation line. SWTC is a participant in the 500 kV segment from Pinal West to Pinal South. SRP is the project manager for this project, which has an anticipated in-service date of 2011.

Pinal South to Tortolita

This project contemplates construction of a 500 kV line from the proposed Pinal South Substation to the TEP Tortolita Substation. SWTC is evaluating possible participation in this project. TEP will be the project manager for this project, which has an anticipated in-service date of 2011.

Tortolita to Vail

This project contemplates construction of a 345 kV line from Tortolita Substation to Vail Substation with a routing through East Loop Substation. SWTC is evaluating possible participation in this project. TEP will be the project manager for this project, which has an anticipated in-service date of 2014.

Other projects

In addition to the above projects that SWTC is evaluating possible participation in, SWTC is also evaluating the following projects whose in-service dates have not yet been established and are currently under review at TEP:

1) Tortolita to Winchester 500 kV line

2) Winchester to Vail 2nd 345 kV line
3) Vail Substation to South Substation 2nd 345 kV line
4) Tortolita to South Substation 345 kV line
5) Westwing to South Substation 2nd 345 kV line

CHANGES FROM 2007 TEN-YEAR PLAN FILING

SWTC notes only minor changes in this Ten-Year Plan Filing over its Ten-Year Plan Filing dated January 30, 2007. The changes are noted below:

Saddlebrooke Ranch Substation Project. Now in-service.

Hackberry 230/69 kV Substation. Now in-service.

Saguaro to Naviska 115 kV line. The Saguaro to Naviska 115 kV line will be constructed in connection with the Naviska to Thornydale 115 kV line. This will be a joint project with TEP and the Central Arizona Project. The in-service date for this project has changed from 2008 to 2009.

Apache to Hayden 115 kV Line to Redington Switchyard. Name for this project has been changed to Apache/Hayden to San Manuel 115 kV Line. This represents a slight change from the last filing and reflects the loop-in of the Apache to Hayden 115 kV line into the APS San Manuel Substation. Redington Switchyard with a short 115 kV jumper to the San Manuel Substation is no longer being considered.

Marana 115 kV Line Project. The Marana Tap to Marana 115 kV Line Upgrade replaces this project. The proposed loop-in to Marana Substation has changed to an upgrade of the Marana Tap to Marana 115 kV line. The in-service date has changed from 2009 to 2012.

Valencia to CAP Black Mountain 115 kV Line. The in-service date for this project has changed from 2011 to 2009.

Valencia to San Joaquin 115 kV Line. This project is no longer being considered.

Sandario to San Joaquin 115 kV Line. This project is no longer being considered.

Naviska to Thornydale 115 kV Line. The in-service date for this project has changed from 2009 to 2010.

Thornydale to Picture Rocks 115 kV Line and Picture Rocks to CAP Twin Peaks 115 kV Line. These projects are replaced by the Thornydale to Rattlesnake 115 kV Line Project and the in-service date has changed from 2012 to 2010.

Sandario to CAP Brawley 115 kV Line. Name for this project has been changed to CAP 115 kV Line Loop-in to SWTC Sandario. The in-service date has changed from 2012 to 2009.

New Tucson 230/24.9 kV Substation. This project was removed. Due to the final location of this substation, no new transmission will be built.

New Tucson Loop-in of Pantano to Sahuarita 230 kV Line. This project was removed. Due to the final location of this substation, no new transmission will be built

Marana to Avra Valley 115 kV Line Upgrade. The in-service date has changed from 2015 to 2010.

Sloan 230/69 kV Substation. This project was removed. Due to the final location of this substation, no new transmission will be built.

Sloan to Huachuca 230 kV Line. This is a new project replacing both the Pantano to Kartchner 115 kV line upgrade and Kartchner to San Rafael 230 kV line projects.

Pinal West 500/345 kV Project. This is a new project.

Western 115 kV Line Loop-in to Pantano. This is a new project.

Pinal South to Tortolita 500 kV Line. This is a new project.

Avra Valley to Sandario Tap 115 kV Line Upgrade. This is a new project.

Sandario Tap to Three Points 115 kV Line Upgrade. This is a new project.

CS1 to Three Points 115 kV Line. This is a new project.

CS1 to Bicknell 230 kV Line. This is a new project.

SECTION I

SWTC PLANNED TRANSMISSION LINES

SOUTHWEST TRANSMISSION COOPERATIVE, INC.

10 YEAR PLAN

PLANNED TRANSMISSION FACILITIES

Line Designation		Apache/Hayden to San Manuel 115 kV line
Size		
a)	Voltage	115 kV
b)	Capacity	123 MVA
c)	Point of Origin	Apache/Hayden 115 kV line near San Manuel Sec. 19 T9S R18E
d)	Point of Termination	APS San Manuel Substation Sec. 29 T9S R17E
e)	Length	Approximately 4.5 miles
Routing		Apache/Hayden 115 kV line, heading generally West then Southwest to San Manuel Substation
Purpose		To provide system reliability, increased transfer capability and voltage support for the SWTC system and to provide for anticipated Member load growth
Date		
a)	Construction Start	2008
b)	In-Service Date	December 2008
Is Certificate Necessary?		Yes

SOUTHWEST TRANSMISSION COOPERATIVE, INC.

10 YEAR PLAN

PLANNED TRANSMISSION FACILITIES

Line Designation		Western 115 kV Line Loop-in to Pantano
Size		
a)	Voltage	115 kV
b)	Capacity	To be determined
c)	Point of Origin	Western's Adams Tap to Nogales Tap 115 kV line near Pantano Sec. 11, Sec. 12 T17S R17E
d)	Point of Termination	Pantano Substation Sec. 11, Sec. 12 T17S R17E
e)	Length	Approximately 0.2 miles
Routing		Western's Adams Tap to Nogales Tap 115 kV line heading South to Pantano Substation
Purpose		To provide for increased reliability to the SWTC and Western transmission systems in the area, allowing for the ability to take various segments of both systems out of service for maintenance purposes
Date		
a)	Construction Start	2008
b)	In-Service Date	March 2009
Is Certificate Necessary?		No

SOUTHWEST TRANSMISSION COOPERATIVE, INC.

10 YEAR PLAN

PLANNED TRANSMISSION FACILITIES

Line Designation		Saguaro to Naviska 115 kV line
Size		
a)	Voltage	115 kV
b)	Capacity	219 MVA
c)	Point of Origin	Saguaro Substation Sec. 14 T10S R10E
d)	Point of Termination	Future Naviska Substation Sec. 5 T11S R11E
e)	Length	Approximately 3.2 miles
Routing		Southeast of the APS Saguaro Substation to Naviska Substation paralleling existing transmission lines in the area
Purpose		To provide for increased reliability to the existing SWTC 115 kV system and provide for anticipated SWTC Member System load growth
Date		
a)	Construction Start	2008
b)	In-Service Date	April 2009
Is Certificate Necessary?		Yes

SOUTHWEST TRANSMISSION COOPERATIVE, INC.

10 YEAR PLAN

PLANNED TRANSMISSION FACILITIES

Line Designation		Valencia to CAP Black Mountain 115 kV line
Size		
a)	Voltage	115 kV
b)	Capacity	219 MVA
c)	Point of Origin	Valencia Substation Sec. 17 T15S R12E
d)	Point of Termination	CAP Black Mountain 115 kV line, 2 miles South of Black Mountain Substation Sec. 11 T15S R12E
e)	Length	Approximately 2.6 miles
Routing		Directly East of the Valencia Substation to the turning structure of the 115 kV CAP line that heads directly North 2 miles to the CAP Black Mountain Substation
Purpose		To provide for increased reliability to the existing SWTC 115 kV system and provide for anticipated SWTC Member System load growth
Date		
a)	Construction Start	2008
b)	In-Service Date	May 2009
Is Certificate Necessary?		Yes

SOUTHWEST TRANSMISSION COOPERATIVE, INC.

10 YEAR PLAN

PLANNED TRANSMISSION FACILITIES

Line Designation		CAP 115 kV Line Loop-in to SWTC Sandario
Size		
a)	Voltage	115 kV
b)	Capacity	219 MVA
c)	Point of Origin	CAP Sandario to Brawley 115 kV line near SWTC Sandario Substation Sec. 33 T13S R11E
d)	Point of Termination	Sandario Substation Sec. 32 T13S R11E
e)	Length	Approximately 0.6 miles
Routing		CAP Sandario to Brawley 115 kV line near Sandario Substation, heading Southwest into the Sandario Substation
Purpose		To provide for increased reliability to the existing SWTC 115 kV system and provide for anticipated SWTC Member System load growth
Date		
a)	Construction Start	2009
b)	In-Service Date	December 2009
Is Certificate Necessary?		No

SOUTHWEST TRANSMISSION COOPERATIVE, INC.

10 YEAR PLAN

PLANNED TRANSMISSION FACILITIES

Line Designation		Marana to Avra Valley 115 kV Line Upgrade
Size		
a)	Voltage	115 kV
b)	Capacity	219 MVA
c)	Point of Origin	Marana Substation Sec. 26 T11S R10E
d)	Point of Termination	Avra Valley Substation Sec. 11 T13S R10E
e)	Length	Approximately 8.75 miles
Routing		Marana Substation, South to Avra Valley Substation, following the existing Marana to Avra Valley ROW
Purpose		To provide for increased reliability to the existing SWTC 115 kV system and provide for anticipated SWTC Member System load growth
Date		
a)	Construction Start	2009
b)	In-Service Date	April 2010
Is Certificate Necessary?		Yes

SOUTHWEST TRANSMISSION COOPERATIVE, INC.

10 YEAR PLAN

PLANNED TRANSMISSION FACILITIES

Line Designation		Naviska to Thornydale 115 kV Line
Size		
a)	Voltage	115 kV
b)	Capacity	219 MVA
c)	Point of Origin	Future Naviska Substation Sec. 5 T11S R11E
d)	Point of Termination	Thornydale Substation Sec. 33 T11S R12E
e)	Length	Approximately 7.0 miles
Routing		Southeast from Naviska Substation to Thornydale Substation
Purpose		To provide for increased reliability to the existing SWTC 115 kV system and provide for anticipated SWTC Member System load growth
Date		
a)	Construction Start	2010
b)	In-Service Date	December 2010
Is Certificate Necessary?		Yes

SOUTHWEST TRANSMISSION COOPERATIVE, INC.

10 YEAR PLAN

PLANNED TRANSMISSION FACILITIES

Line Designation		Thornydale to Rattlesnake 115 kV Line
Size		
a)	Voltage	115 kV
b)	Capacity	219 MVA
c)	Point of Origin	Thornydale Substation Sec. 33 T11S R12E
d)	Point of Termination	Rattlesnake Substation Sec. 14 T12S R11E
e)	Length	Approximately 19.0 miles
Routing		Southwest from Thornydale Substation to Rattlesnake Substation
Purpose		To provide for increased reliability to the existing SWTC 115 kV system and provide for anticipated SWTC Member System load growth
Date		
a)	Construction Start	2010
b)	In-Service Date	December 2010
Is Certificate Necessary?		Yes

SOUTHWEST TRANSMISSION COOPERATIVE, INC.

10 YEAR PLAN

PLANNED TRANSMISSION FACILITIES

Line Designation		Avra Valley to Sandario Tap 115 kV Line Upgrade
Size		
a)	Voltage	115 kV
b)	Capacity	219 MVA
c)	Point of Origin	Avra Valley Substation Sec. 11 T13S R10E
d)	Point of Termination	Sandario Tap Sec. 23 T13S R10E
e)	Length	Approximately 2.8 miles
Routing		Avra Valley Substation, South to the Sandario Tap turning structure, following the existing Avra Valley to Sandario Tap ROW
Purpose		To provide for increased reliability to the existing SWTC 115 kV system and provide for anticipated SWTC Member System load growth
Date		
a)	Construction Start	2011
b)	In-Service Date	2011
Is Certificate Necessary?		Yes

SOUTHWEST TRANSMISSION COOPERATIVE, INC.

10 YEAR PLAN

PLANNED TRANSMISSION FACILITIES

Line Designation		Sandario Tap to Three Points 115 kV Line Upgrade
Size		
a)	Voltage	115 kV
b)	Capacity	219 MVA
c)	Point of Origin	Sandario Tap Sec. 23 T13S R10E
d)	Point of Termination	Three Points Substation Sec. 25 T15S R10E
e)	Length	Approximately 13.71 miles
Routing		Sandario Tap turning structure, South to the existing Three Points Substation, following the existing Sandario Tap to Three Points ROW
Purpose		To provide for increased reliability to the existing SWTC 115 kV system and provide for anticipated SWTC Member System load growth
Date		
a)	Construction Start	2011
b)	In-Service Date	2011
Is Certificate Necessary?		Yes

SOUTHWEST TRANSMISSION COOPERATIVE, INC.

10 YEAR PLAN

PLANNED TRANSMISSION FACILITIES

Line Designation		Hassayampa to Pinal West
Size		
a)	Voltage	500 kV
b)	Capacity	1200 MVA
c)	Point of Origin	Hassayampa Switchyard Sec. 15 T1S R6W
e)	Point of Termination	Pinal West Substation Sec. 18 T5S R5E
f)	Length	Approximately 52.0 miles
Routing		South and East of the Hassayampa Switchyard along the existing Palo Verde-Kyrene 500 kV line to a point where the gas pipeline splits from the transmission line, then generally along the pipeline (except in the Maricopa County Mobile Planning Area) to the new Pinal West Substation
Purpose		Identified by SWAT as necessary to accommodate load growth and access to energy sources in the central AZ area. The project provides for increased transfer capability to SWTC loads in Southeast Arizona
Date		
a)	Construction Start	2006
b)	In-Service Date	2008
Is Certificate Necessary?		Yes. The Commission in Case 124 issued a Certificate of Environmental Compatibility (Decision No. 67012) on May 24, 2004. SWTC is a participant; SRP is the project manager

SOUTHWEST TRANSMISSION COOPERATIVE, INC.

10 YEAR PLAN

PLANNED TRANSMISSION FACILITIES

Line Designation		Pinal West to Santa Rosa
Size		
a)	Voltage	500 kV
b)	Capacity	1200 MVA
c)	Point of Origin	Pinal West Substation Sec. 18 T5S R2E
e)	Point of Termination	Santa Rosa Substation Sec. 30 T5S R4E
f)	Length	Approximately 14.5 miles
Routing		South and East from the Pinal West substation to approximately Teel Road, then East to the Santa Rosa substation
Purpose		Identified by SWAT as necessary to accommodate load growth and access to energy sources in the central AZ area. The project provides for increased transfer capability to SWTC loads in Southeast Arizona
Date		
a)	Construction Start	2006
b)	In-Service Date	2011
Is Certificate Necessary?		Yes. The Commission in Case 126 issued a Certificate of Environmental Compatibility (Decision No. 68093) on August 25, 2005. SWTC is a participant; SRP is the project manager

SOUTHWEST TRANSMISSION COOPERATIVE, INC.

10 YEAR PLAN

PLANNED TRANSMISSION FACILITIES

Line Designation		Santa Rosa to Pinal South
Size		
a)	Voltage	500 kV
b)	Capacity	1200 MVA
c)	Point of Origin	Santa Rosa Substation Sec. 30 T5S R4E
e)	Point of Termination	Pinal South Substation Sec. 6 T7S R8E
f)	Length	Approximately 0.0 miles
Routing		From Santa Rosa Easterly to approximately the Santa Rosa Wash, then generally South to approximately a half mile North of I-8 where it turns East and then Easterly to about the location of the ED2 substation and continuing East to the UPRR to where it turns North.
Purpose		Identified by SWAT as necessary to accommodate load growth and access to energy sources in the central AZ area. The project provides for increased transfer capability to SWTC loads in Southeast Arizona
Date		
a)	Construction Start	2006
b)	In-Service Date	2011
Is Certificate Necessary?		Yes. The Commission in Case 126 issued a Certificate of Environmental Compatibility (Decision No. 68093) on August 25, 2005. SWTC is a participant; SRP is the project manager

SOUTHWEST TRANSMISSION COOPERATIVE, INC.

10 YEAR PLAN

PLANNED TRANSMISSION FACILITIES

Line Designation		Pinal West 500/345 kV Project
Size		
a)	Voltage	500/345 kV
b)	Capacity	672 MVA, 500/345 kV Transformer Rating
c)	Point of Origin	Hassayampa 500 kV Sec. 15, T1S, R6W Westwing 345 kV Sec. 12, T4N, R1W
d)	Point of Termination	Pinal West 500 kV Sec. 18, T5S, R2E South 345 kV Sec. 36, T16S, R13E
e)	Length	52.0 miles
Routing		Hassayampa 500 kV Station Southeast along the Northern edge of the Sonoran Desert National Monument to the Pinal West 500/345 kV station
Purpose		Identified by TEP as necessary to increase TEP System Load Serving Capability from remote resources. The project provides for increased transfer capability to SWTC loads in Southeast Arizona
Date		
a)	Construction Start	2007
b)	In-Service Date	2008
Is Certificate Necessary?		Complete - SWTC is a participant; SRP is the project manager

SOUTHWEST TRANSMISSION COOPERATIVE, INC.

10 YEAR PLAN

PLANNED TRANSMISSION FACILITIES

Line Designation		Pinal South to Tortolita 500 kV Line
Size		
a)	Voltage	500 kV
b)	Capacity	1732 MVA
c)	Point of Origin	Pinal South Substation Sec. 6 T7S R8E
e)	Point of Termination	Tortolita Substation Sec. 6 T7S R8E
f)	Length	Approximately 38.0 miles
Routing		From Pinal South Substation to Tortolita Substation following the CAP facilities
Purpose		Identified by TEP as necessary to increase TEP System Load Serving Capability from removed resources. The project provides for increased transfer capability to SWTC loads in Southeast AZ
Date		
a)	Construction Start	2009
b)	In-Service Date	2011
Is Certificate Necessary?		Yes. RFP for Siting Study in progress, not released for bids. SWTC is a participant; TEP is the project manager

SOUTHWEST TRANSMISSION COOPERATIVE, INC.

10 YEAR PLAN

PLANNED TRANSMISSION FACILITIES

Line Designation		Marana Tap to Marana 115 kV Line Upgrade
Size		
a)	Voltage	115 kV
b)	Capacity	219 MVA
c)	Point of Origin	Marana Tap Sec. 26 T11S R10E
d)	Point of Termination	Marana Substation Sec. 26 T11S R10E
e)	Length	Approximately 0.2 miles
Routing		Western's Marana Tap, West to the SWTC Marana Substation
Purpose		To provide for increased reliability to the existing SWTC 115 kV system and provide for anticipated SWTC Member System load growth
Date		
a)	Construction Start	2012
b)	In-Service Date	2012
Is Certificate Necessary?		No

SOUTHWEST TRANSMISSION COOPERATIVE, INC.

10 YEAR PLAN

PLANNED TRANSMISSION FACILITIES

Line Designation		CS1 to Three Points 115 kV Line
Size		
a)	Voltage	115 kV
b)	Capacity	219 MVA
c)	Point of Origin	Future CS1 Substation Sec. 26 T15S R10E
d)	Point of Termination	Three Points Substation Sec. 25 T15S R10E
e)	Length	Approximately 0.5 miles
Routing		CS1 Substation, directly West ½ mile to the SWTC Three Points Substation
Purpose		To provide for increased reliability and transfer capability to the existing SWTC 115 kV system and provide for anticipated SWTC Member System load growth
Date		
a)	Construction Start	2013
b)	In-Service Date	2013
Is Certificate Necessary?		Yes

SOUTHWEST TRANSMISSION COOPERATIVE, INC.

10 YEAR PLAN

PLANNED TRANSMISSION FACILITIES

Line Designation		CS1 to Bicknell 230 kV Line
Size		
a)	Voltage	230 kV
b)	Capacity	438 MVA
c)	Point of Origin	Future CS1 Substation Sec. 26 T15S R10E
d)	Point of Termination	Bicknell Substation Sec. 30 T17S R13E
e)	Length	Approximately 21.0 miles
Routing		CS1 Substation, South then East then generally South and Southeast to the SWTC Bicknell Substation
Purpose		To provide for increased reliability and transfer capability to the existing SWTC 115 kV system and provide for anticipated SWTC Member System load growth
Date		
a)	Construction Start	2013
b)	In-Service Date	2013
Is Certificate Necessary?		Yes

SOUTHWEST TRANSMISSION COOPERATIVE, INC.

10 YEAR PLAN

PLANNED TRANSMISSION FACILITIES

Line Designation		Upgrade of Apache to Butterfield 230 kV Line
Size		
a)	Voltage	230 kV
b)	Capacity	TBD
c)	Point of Origin	Apache Substation Sec. 10 T16S R24E
d)	Point of Termination	Butterfield Substation Sec. 31 T16S R22E
e)	Length	Approximately 16.0 miles
Routing		Same R.O.W. as existing Apache to Butterfield 230 kV line
Purpose		To mitigate various thermal overloads and/or voltage criteria violations due to N-1 outages on the 230 kV system and to provide for anticipated load growth in SWTC's Southern Area.
Date		
a)	Construction Start	TBD
b)	In-Service Date	TBD
Is Certificate Necessary?		Yes

SOUTHWEST TRANSMISSION COOPERATIVE, INC.

10 YEAR PLAN

PLANNED TRANSMISSION FACILITIES

Line Designation		Sloan to Huachuca 230 kV Line
Size		
a)	Voltage	230 kV
b)	Capacity	TBD
c)	Point of Origin	Future Sloan Substation Sec. 29 T16S R20E
d)	Point of Termination	Huachuca Substation Sec. 13 T20S R20E
e)	Length	Approximately 24.0 miles
Routing		Sloan Substation, generally South to the Huachuca City Area
Purpose		To provide an additional delivery point for SSVEC in order to reliably serve SSVEC loads under N-1 outage conditions
Date		
a)	Construction Start	TBD
b)	In-Service Date	TBD
Is Certificate Necessary?		Yes

SECTION II

SOUTHWEST TRANSMISSION COOPERATIVE, INC.

INTERNAL PLANNING CRITERIA AND FACILITY RATINGS

The following represents the internal planning criteria of Southwest Transmission Cooperative, Inc. ("SWTC") and also identifies the assumptions and methodologies used by SWTC to determine electrical facility ratings. This criteria is published in the FERC FORM #715 Filing that is made annually by the Western Electricity Coordinating Council ("WECC") for its members.

The assumptions used below represent criteria that SWTC has used for a number of years, to meet requirements of the North American Electric Reliability Council ("NERC"), the Federal Energy Regulatory Commission ("FERC") and the WECC.

1) Nominal Operating Limit

- Transmission lines should not be loaded greater than 100% of the thermal rating of the conductors.

- Transformers, circuit breakers, current transformers, and other equipment should not be loaded above their continuous nameplate rating.

- Transmission system voltages should not fall below 0.95 per unit (p.u.) of nominal rating nor rise above 1.05 p.u. of nominal rating.

2) Emergency Operating Limit

- Transmission lines should not be loaded greater than 110% of the thermal rating of the conductors.

- Transformers, circuit breakers, current transformers, and other equipment should not be loaded above their continuous nameplate rating.

- Transmission system voltages should not fall below 0.90 p.u. of nominal rating nor rise above 1.10 p.u. of nominal rating.

3) Transformer Loading Criteria

For study purposes, transformers are generally considered in nominal operating conditions at the maximum of their 55°C rise; and represented at the maximum of their 65°C rise under emergency operating conditions.

4) Conductor Loading Criteria

Ampacities for the bulk of SWTC's transmission lines have been developed, using the House and Tuttle formula for Aluminum Conductor Steel Reinforced (ACSR) overhead conductors as developed by the Western Area Power Administration (Power System Bulletin 510, dated January 14, 1992).

The Conductor type and Ampacities are listed below at 75 degrees Celsius conductor operating temperature, 2 foot per second wind velocity and 40 degrees Celsius ambient air temperature:

Type	Amps
#2 CU	240
#4 ACSR	120
1/0 ACSR	240
3/0 ACSR	310
4/0 ACSR	360
266.8 ACSR	380
336.4 ACSR	500
477 ACSR	620
795 ACSR	840
954 ACSR	920
1272 ACSR	1100
2-954 ACSR	1370

5) The following table summarizes the conditions establishing limits for SWTC.

Circuit Feature	Nominal Limit	Emergency Limit
Power Circuit Breaker	100% rating	100% rating
Bushing CT	100% connection	100% connection
Wound CT	100% thermal	100% thermal rating
Switches	100% rating	100% rating
Conductor	100% thermal rating	110% thermal rating
Regulator	100% rating	100% rating
Transformer	100% rating @ 55°C rise	100% rating @ 65°C rise
Reactor	100% rating	100% rating
Relay Setting	80% of setting	80% of setting

6) Table 1 below describes the electrical load limits of SWTC's facilities under nominal and emergency conditions. The methodology for determining the path was to pass through the from-bus and stop just before the to-bus. Transformers, jumpers, and other equipment were considered when determining the limiting element for the from-bus only.

Table 1: Load Limits

Station A From	Station B To	Voltage KV	Nominal Limit Amps	Emergency Limit Amps	Nominal Limit MVA	Emergency Limit MVA	Limiting Equipment
BICKNELL	VAIL	345	251	323	150	193	Transformer
VAIL	BICKNELL	345	1370	1507	819	901	Conductor
GREEN-SW	GREENLEE	345	586	698	350	417	Transformer
GREENLEE	GREEN-SW	345	1370	1507	819	901	Conductor
APACHE	BUTERFLD	230	840	924	335	368	Conductor
BUTERFLD	APACHE	230	840	924	335	368	Conductor
APACHE	RED TAIL	230	1100	1210	438	482	Conductor
RED TAIL	APACHE	230	1100	1210	438	482	Conductor
BUTERFLD	PANTANO	230	840	924	335	368	Conductor
PANTANO	BUTERFLD	230	251	281	100	110	Transformer
BUTERFLD	SAN RAF	230	920	1012	367	403	Conductor
MORENCI	GREEN-SW	230	1100	1210	438	482	Conductor
GREEN-SW	MORENCI	230	251	323	150	193	Transformer
DOSCONDO	MORENCI	230	1100	1210	438	482	Conductor
MORENCI	DOSCONDO	230	1100	1210	438	482	Conductor
MORENCI	PD-MORNC	230	920	1012	367	403	Conductor
PD-MORNC	MORENCI	230	753	843	300	336	Transformer
PANTANO	SAHUARITA	230	251	281	100	110	Transformer
SAHUARITA	PANTANO	230	840	924	335	368	Conductor
SAHUARITA	BICKNELL	230	840	924	335	368	Conductor
BICKNELL	SAHUARITA	230	251	323	150	193	Transformer
RED TAIL	DOSCONDO	230	1100	1210	438	482	Conductor
DOSCONDO	RED TAIL	230	1100	1210	438	482	Conductor
DAVIS	RIVIERA	230	1100	1210	438	482	Conductor
APACHE	WINCHSTR	230	1100	1210	438	482	Conductor
WINCHSTR	APACHE	230	702	773	420	462	Transformer
APACHE	HAYDENAZ	115	620	682	123	136	Conductor
HAYDENAZ	APACHE	115	620	682	123	136	Conductor
AVRA	MARANA	115	360	396	72	79	Conductor
MARANA	AVRA	115	360	396	72	79	Conductor
BICKNELL	THREEPNT	115	251	281	100	112	Transformer
THREEPNT	BICKNELL	115	620	682	123	136	Conductor
BICKNELL	MILLSITE	115	251	281	100	112	Transformer
MILLSITE	BICKNELL	115	620	682	123	136	Conductor
BICKNELL	OXIDEPLT	115	251	281	100	112	Transformer
OXIDEPLT	BICKNELL	115	620	682	123	136	Conductor
MARANA	MARANATP	115	500	550	100	110	Jumpers
MARANATP	MARANA	115	500	550	100	110	Jumpers
PANTANO	KARTCHNR	115	251	281	100	112	Transformer
AVRA	SANDARIO	115	360	396	72	79	Conductor
SANDARIO	AVRA	115	360	396	72	79	Conductor
THREEPNT	SANDARIO	115	360	396	72	79	Conductor
SANDARIO	THREEPNT	115	360	396	72	79	Conductor
THREEPNT	VALENCIA	115	620	682	123	136	Conductor

SECTION III

SOUTHWEST TRANSMISSION COOPERATIVE, INC.

TEN-YEAR PLAN

2008 – 2017

TECHNICAL STUDY REPORT

SUBMITTED TO THE ARIZONA CORPORATION COMMISSION IN FULFILLMENT OF A.R.S. §40-360.02 ¶C.7

TRANSMISSION PLANNING
JANUARY 2008

TABLE OF CONTENTS

INTRODUCTION 38

POWER FLOW ANALYSIS. 38

FULFULLMENT OF BTA REQUIREMENT. 39

STABILITY ANALYSIS. 40

APPENDICES

Appendix A Existing and Proposed Transmission System Maps. 41

Southeast Arizona Existing System 42

Southeast Arizona Planned System 43

Appendix B Power Flow One Line Diagrams. 44

2008 Base System Case . . . . . 45 - 46

2009 Base System Case with Apache/Hayden to San Manuel 115 kV line, Western 115 kV line loop-in to Pantano, Saguaro to Naviska 115 kV and Valencia to CAP Black Mountain . . . . . 47 - 48

2010 Base System Case with Sandario loop-in of CAP's Sandario to Brawley 115 kV line and Marana to Avra Valley 115 kV line upgrade . . . . . 49 - 50

2011 Base System Case with Naviska to Thornydale 115 kV line, Thornydale to Rattlesnake 115 kV line, Avra Valley to Sandario Tap 115 kV line upgrade and Sandario Tap to Three Points 115 kV line upgrade . . . 51 - 52

2012 Base System Case with Marana Tap to Marana 115 kV line upgrade . . . . . .53 - 54

2013 Base System Case with CS1 to Bicknell 230 kV line and CS1 to Three Points 115 kV line . . . . . .55 - 56

2015 Base System Case . . . . . 57 - 58

2016 Base System Case with Sloan to Huachuca 230 kV line . . . . . 59 - 60

2017 All Projects Planned for the 10-Year Period . . . . . 61 - 62

2017 N-1 Outages. . . . . 63 - 69

SOUTHWEST TRANSMISSION COOPERATIVE, INC.
TEN-YEAR PLAN
2008 – 2017
TECHNICAL STUDY REPORT

INTRODUCTION

This technical report is submitted to the Arizona Corporation Commission ("Commission") pursuant to the Arizona Revised Statutes ("ARS") §40-360.02 ¶C.7, and Decision No. 63876, dated July 25, 2001, regarding the Biennial Transmission Assessment prepared by Commission Utilities Division Staff.

Power flow analyses performed for this report looked at N-0 conditions for each year from 2008 to 2017 and N-1 conditions were looked at for the year 2017. This provided an excellent snapshot of the problems that will be encountered with the most recent forecasted loads used in this Ten-Year Plan Filing. The analyses showed that under a variety of N-1 conditions, the system performed with no violations of SWTC's internal criteria.

The last stability analyses completed by SWTC were included in the SWTC 2002 Ten-Year Plan Filing for the Winchester Project. These studies were performed on the system using summer of 2004 conditions, which was reported in the 2002 SWTC Ten-Year Plan filing to the Commission. Stability studies for the expanded systems of 2008 and later have not been performed.

POWER FLOW ANALYSIS

Power flow studies were performed using General Electric's Positive Sequence Load Flow ("PSLF") program. Power flow cases were created for the years 2008-2017 of the study plan using the latest base cases from the Western Electricity Coordinating Council ("WECC"). The base cases from WECC were updated with the latest load projections of SWTC, as noted above, and other entities participating in the Southwest Area Transmission ("SWAT") Planning Group. Representations of the sub-transmission systems of SWTC's member-owners were added to the cases as necessary. Base case and single contingency conditions were evaluated using PSLF to determine system impacts and timing of transmission facilities needed to mitigate those system impacts.

Numerous outage simulations were performed for the years 2016 and 2017, of the study period. The analyses looked at the impact of the most recent projected member system load growth to the interconnected transmission system. The analyses determined where facilities would be placed to most economically serve this projected member system load. As a result of these studies, SWTC will be assured of maintaining reliability and quality of service for its interconnected transmission system and for the customers of its member-owners.

For the years 2011-2017 the loss of the Apache to Redtail 230 kV line showed an overload on the Greenlee 345/230 kV transformer. The overload of the Greenlee transformer was able to be resolved through the Phelps Dodge Mine local remedial action (drop load) set in place with SWTC.

SWTC's existing and proposed transmission system maps are included in Appendix A, which starts on page 42. Power flow one-line diagrams are included in Appendix B, which starts on page 45. The power flow diagrams show the entire SWTC system for all years of the Ten-Year Plan.

FULFILLMENT OF BTA REQUIREMENT

With the filing of this Ten-Year Plan, SWTC complies with the recommendation in the Commission's Fourth Biennial Transmission Assessment for 2006 – 2015 to resolve certain N-1 contingency violations identified in its 2015 planning studies.

The Southeast Arizona Transmission Study (SATS) group was formed to coordinate the transmission planning activities of all entities in southeastern Arizona. A sub-regional group of SATS was formed to address the specific transmission issues in the Cochise County region. Arizona Public Service Company (APS), Southwest Transmission Cooperative, Inc. (SWTC), Sulphur Springs Valley Cooperative (SSVEC), Western Area Power Administration (Western) and Tucson Electric Power (TEP) operate facilities in Cochise County. With the participation of all interested parties, power flow studies were run to identify the most economical, feasible and robust plan for the area.

Of the multitude of options discussed at the Cochise County Study Group meetings, five options were selected for detail studies. The five options were:

- Option 1--Kartchner to San Rafael 230 kV line with Pantano to Kartchner 230 kV line upgrade
- Option 2--Mural to San Rafael 230 kV line
- Option 3--Sloan to Huachuca East 230 kV line
- Option 4--TEP/SWTC 138/115 kV Tie
- Option 5--Apache to Tombstone to Kartchner 115 kV line

The consensus of the Cochise County Study group was that Option 3, a third 230 kV injection point into the Sierra Vista area, would be the most economical, feasible and robust plan for the area in eliminating any future N-1 violations. Option 3 would sustain the SSVEC loads in Sierra Vista past the 2026 projected load levels.

For additional loads past these load levels, the next phase would be to connect the San Rafael Substation and the new 230 kV substation with a 230 kV transmission line, forming a 230 kV loop.

With the addition of the planned projects in this Ten-Year Plan, the analyses of the 2017 system showed no violations to SWTC's internal planning criteria under normal and emergency conditions.

STABILITY ANALYSIS

Extensive stability studies were performed for the Winchester Interconnect Project as reported in the 2002 SWTC Ten-Year Plan filing to the Commission. SWTC has not performed any stability analyses for the expanded systems of 2007 and beyond.

APPENDIX A

EXISTING AND PROPOSED TRANSMISSION SYSTEM MAPS

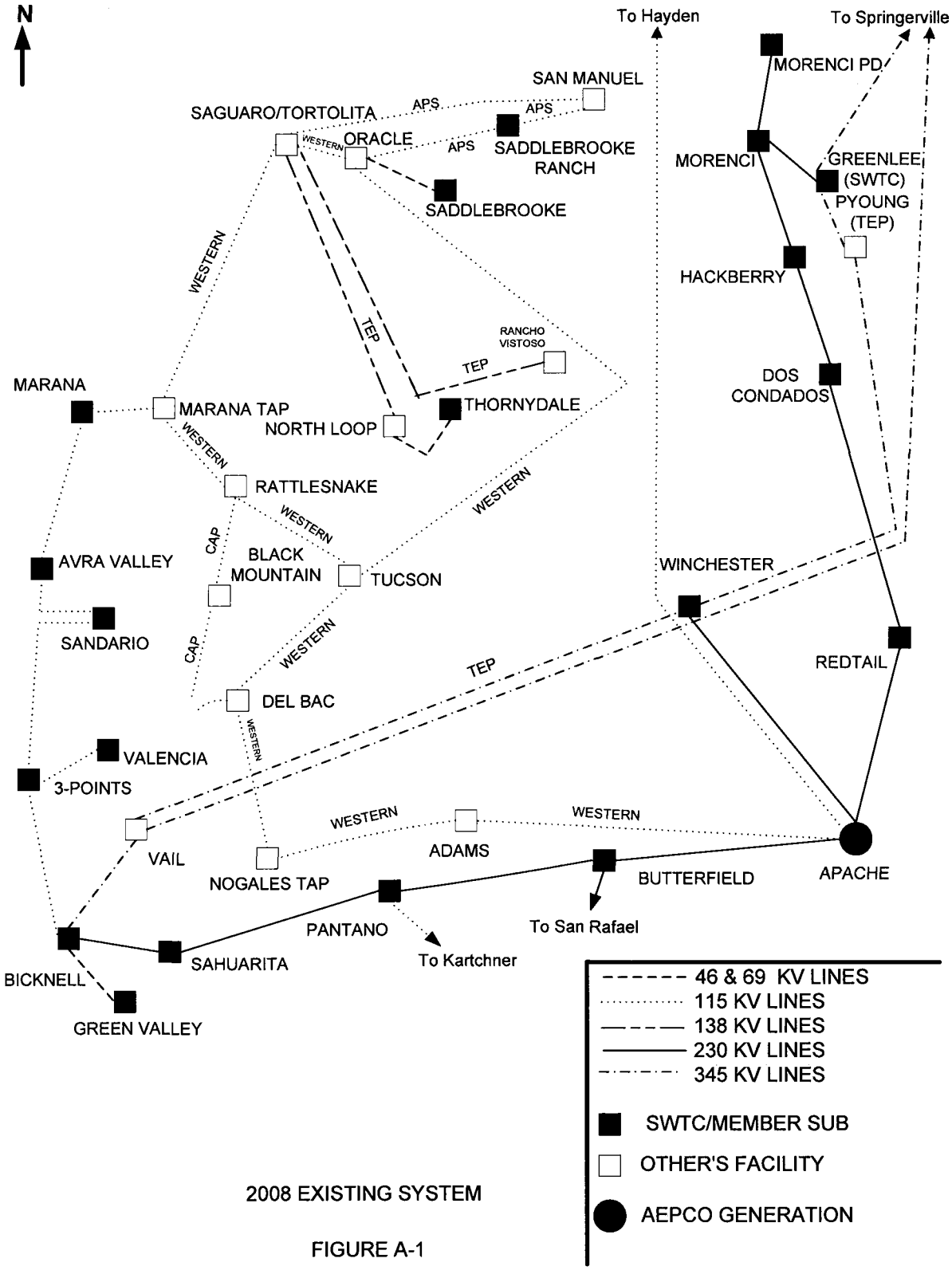

2008 EXISTING SYSTEM

FIGURE A-1

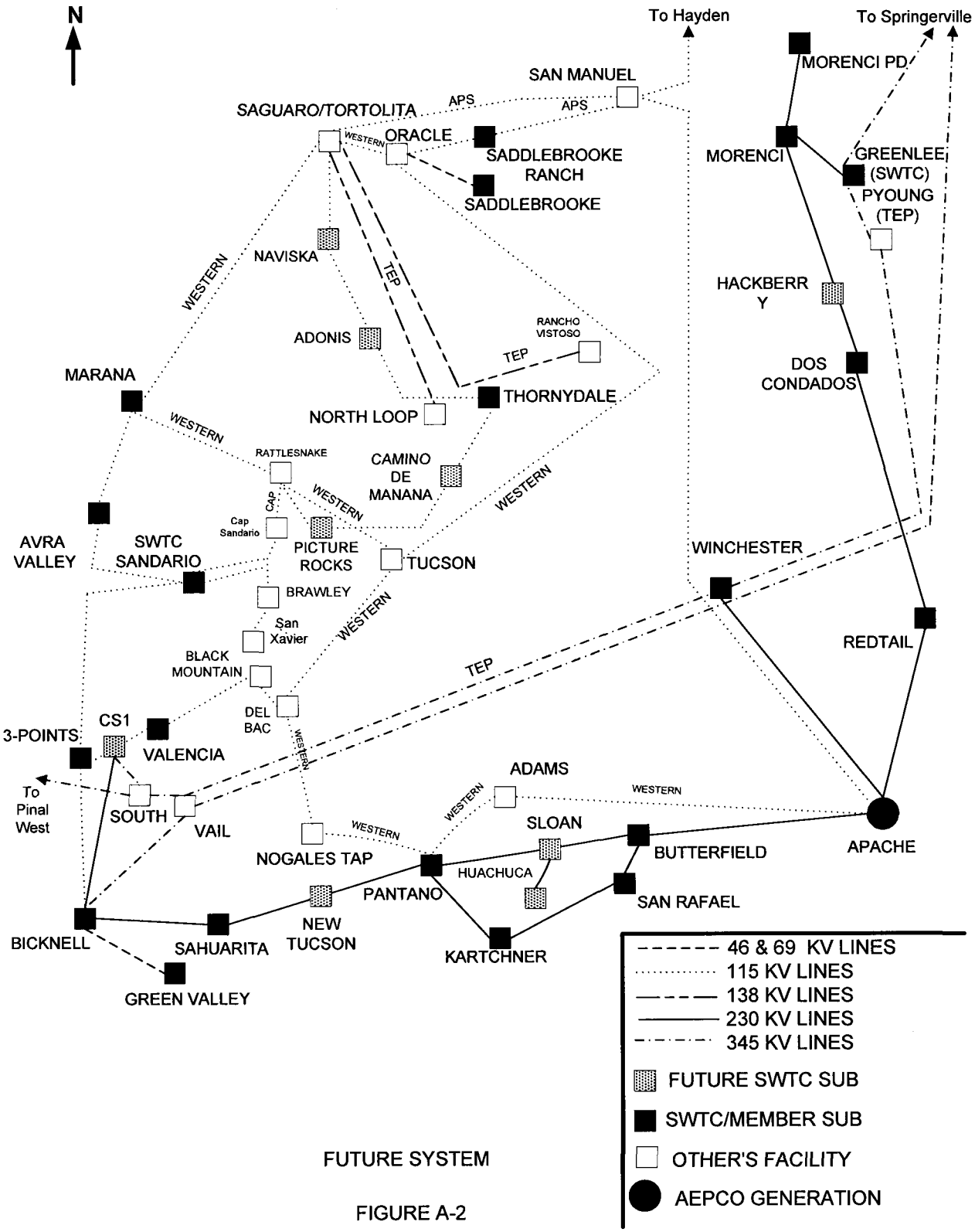

FUTURE SYSTEM

FIGURE A-2

APPENDIX B

POWER FLOW ONE LINE DIAGRAMS

2008 Southwest Transmission Cooperative Base System

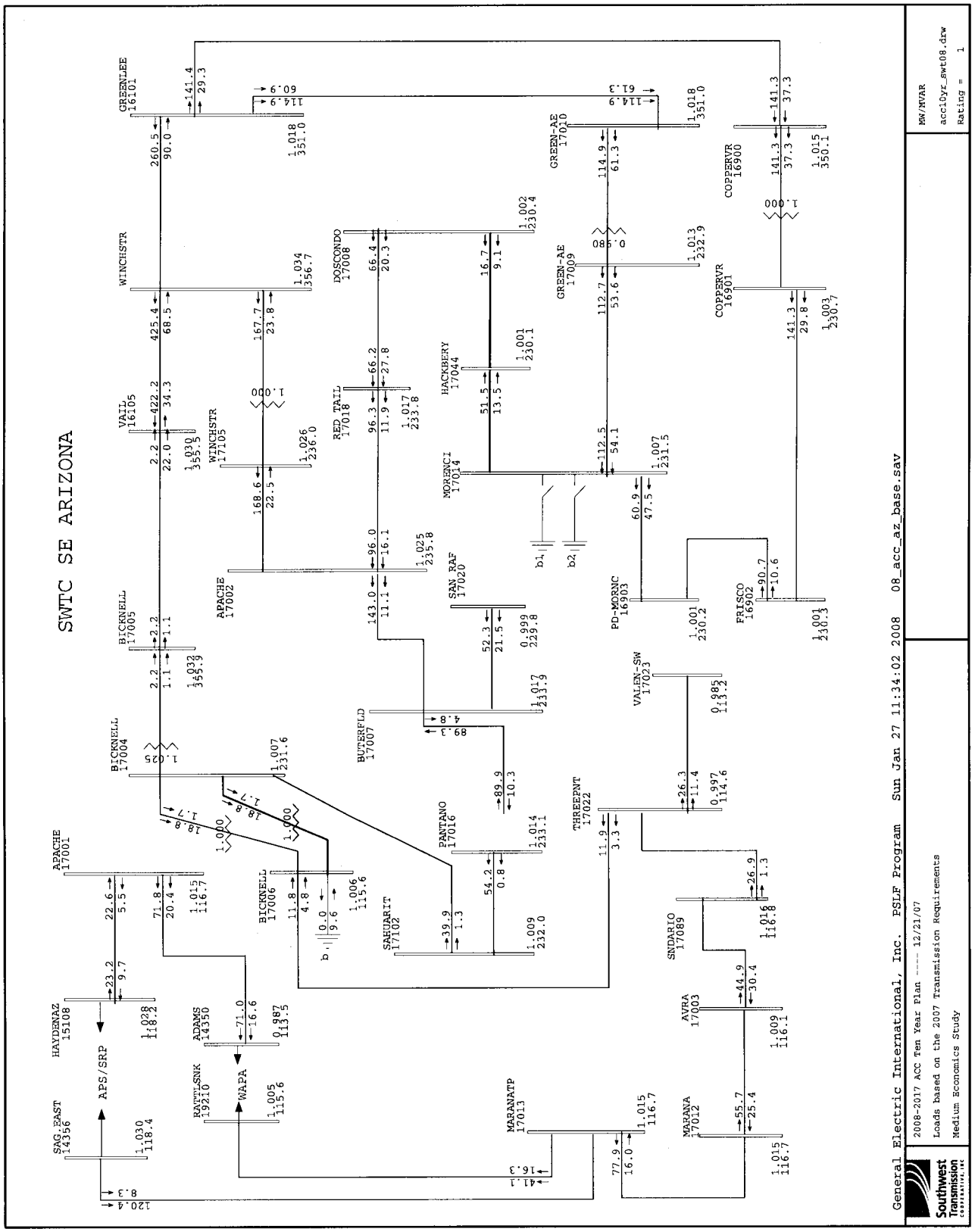

2008 Southwest Transmission Cooperative detail of SWTC's Western System

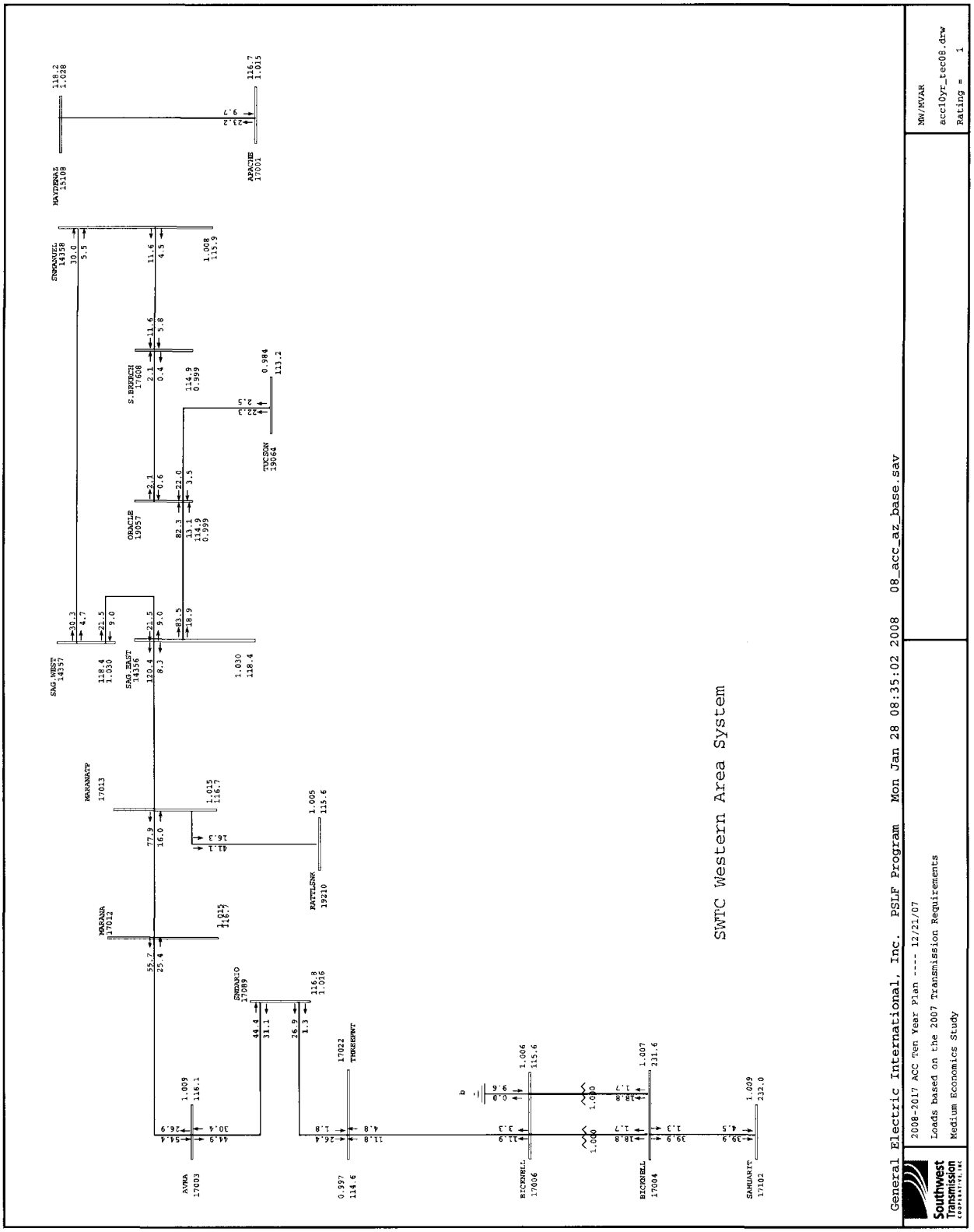

2009 Southwest Transmission Cooperative Base System with Apache/Hayden to San Manuel 115 kV line, Western 115 kV line loop-in to Pantano, Saguaro to Naviska 115 kV and Valencia to CAP Black Mountain

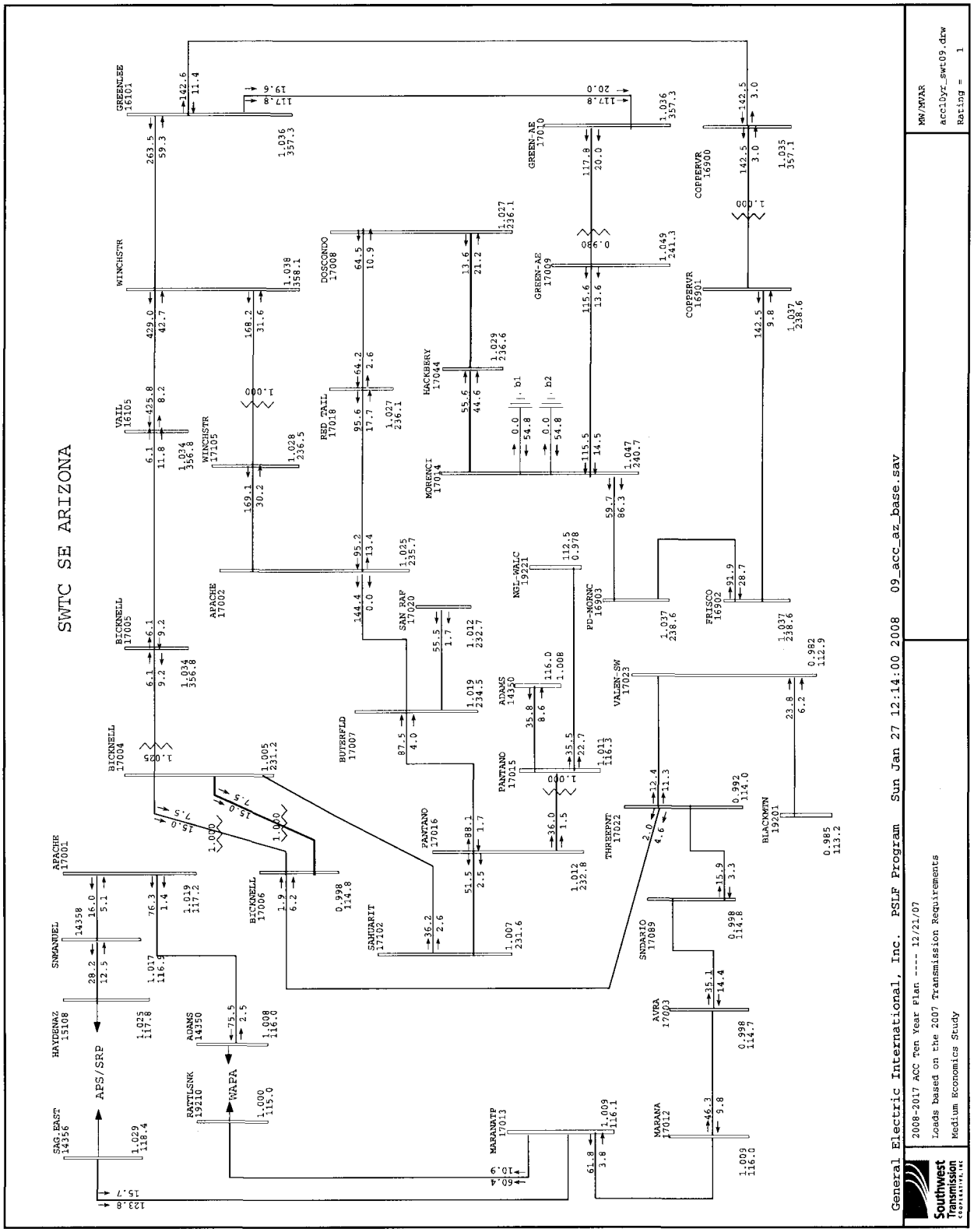

2009 Southwest Transmission Cooperative detail of SWTC's Western Area with Apache/Hayden to San Manuel 115 kV line, Western 115 kV line loop-in to Pantano, Saguaro to Naviska 115 kV and Valencia to CAP Black Mountain

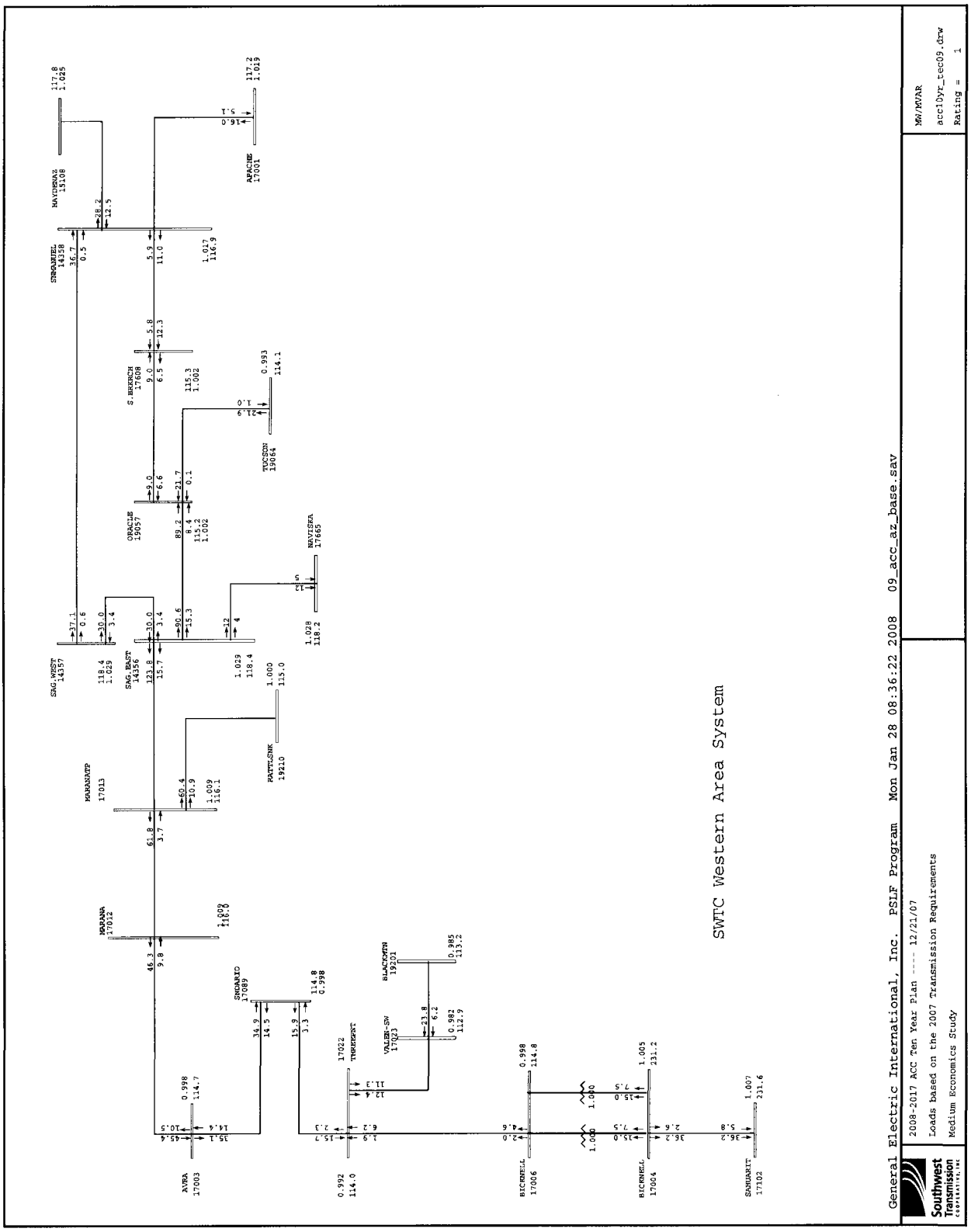

2010 Southwest Transmission Cooperative Base System with Sandario loop-in of CAP's Sandario to Brawley 115 kV line, Marana to Avra Valley 115 kV line upgrade and New Tucson loop-in of Pantano to Sahuarita 230 kV

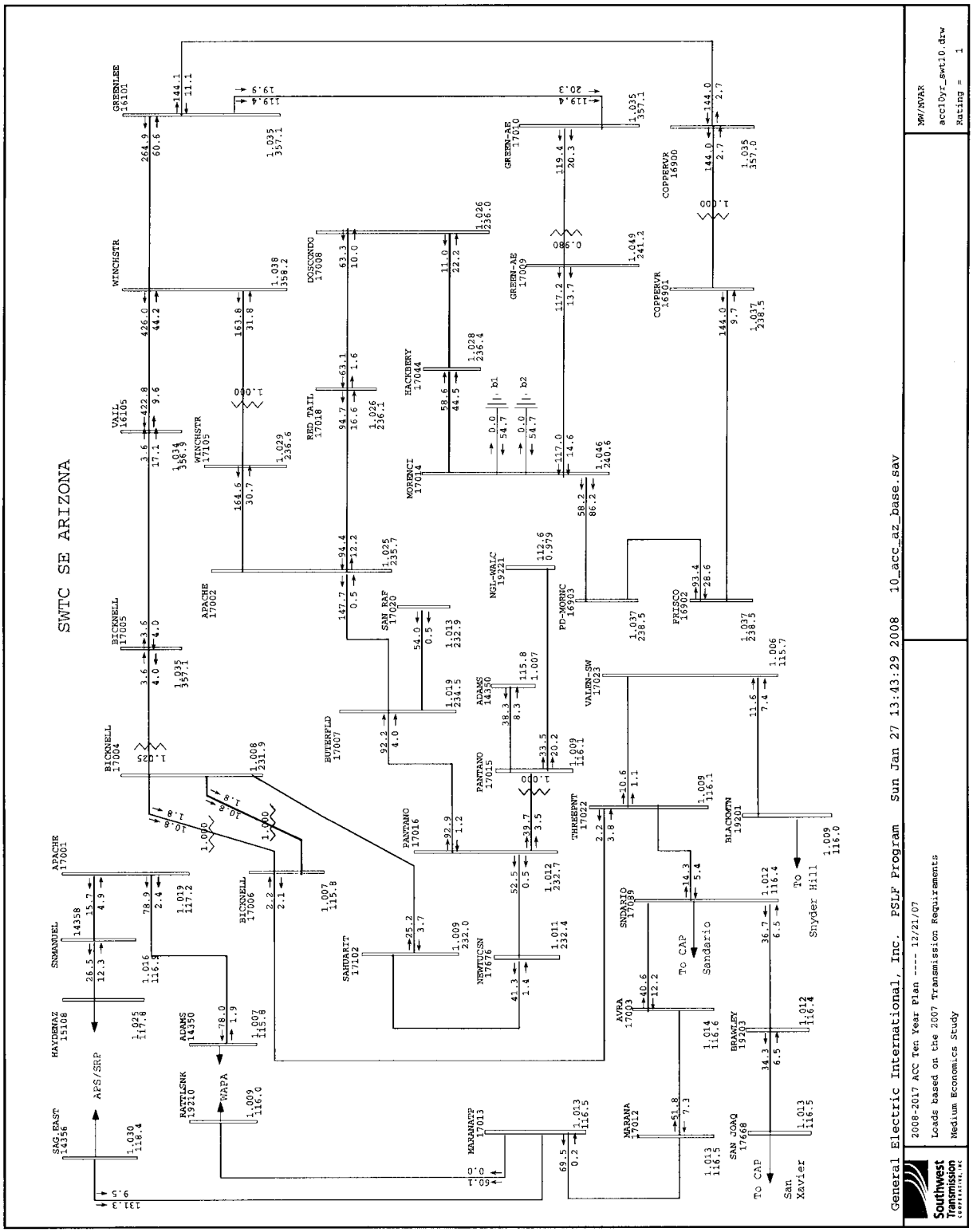

2010 Southwest Transmission Cooperative detail of SWTC's Western Area with Sandario loop-in of CAP's Sandario to Brawley 115 kV line and Marana to Avra Valley 115 kV line upgrade

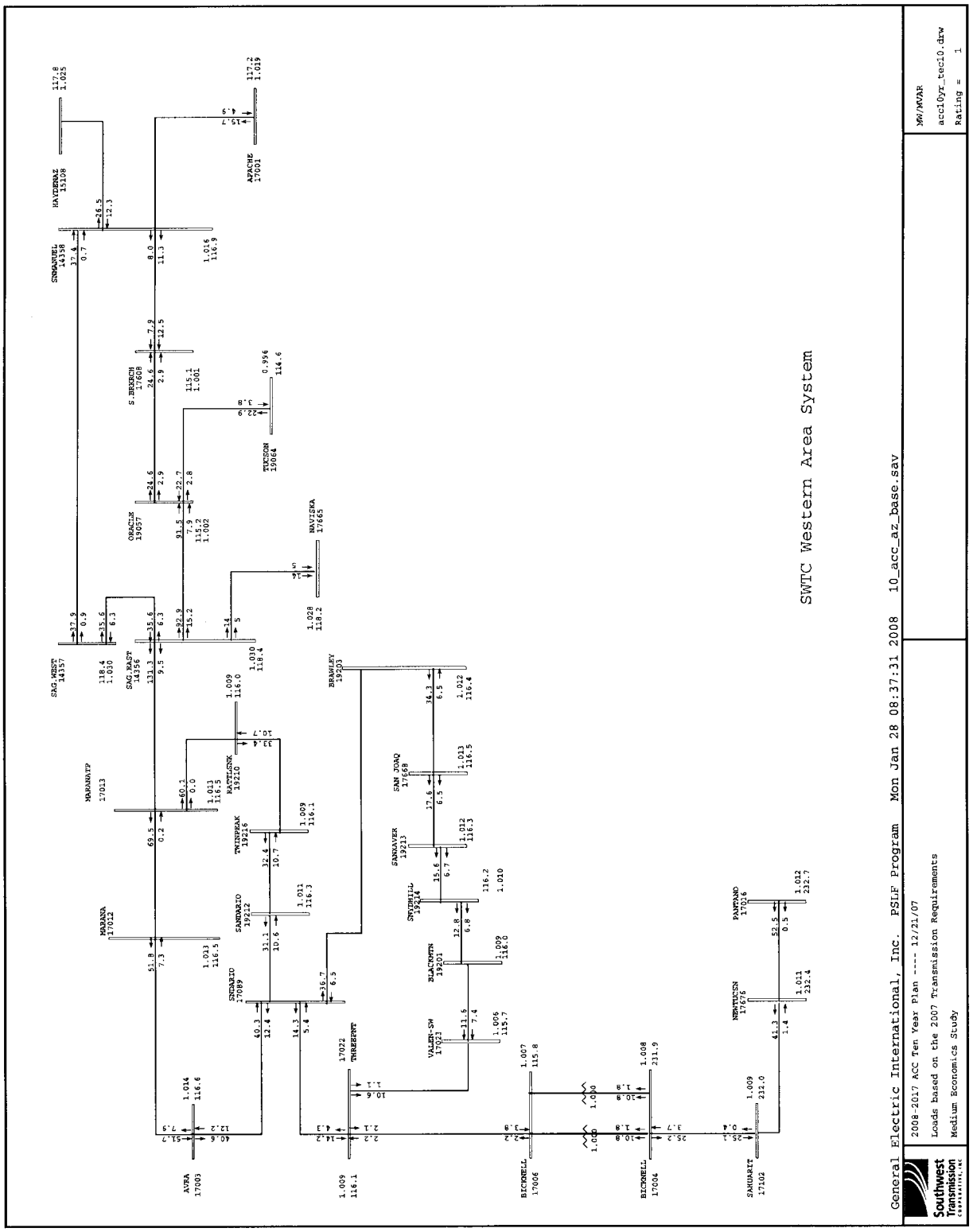

2011 Southwest Transmission Cooperative Base System with Naviska to Thornydale 115 kV line, Thornydale to Rattlesnake 115 kV line and Avra Valley to Sandario Tap 115 kV line

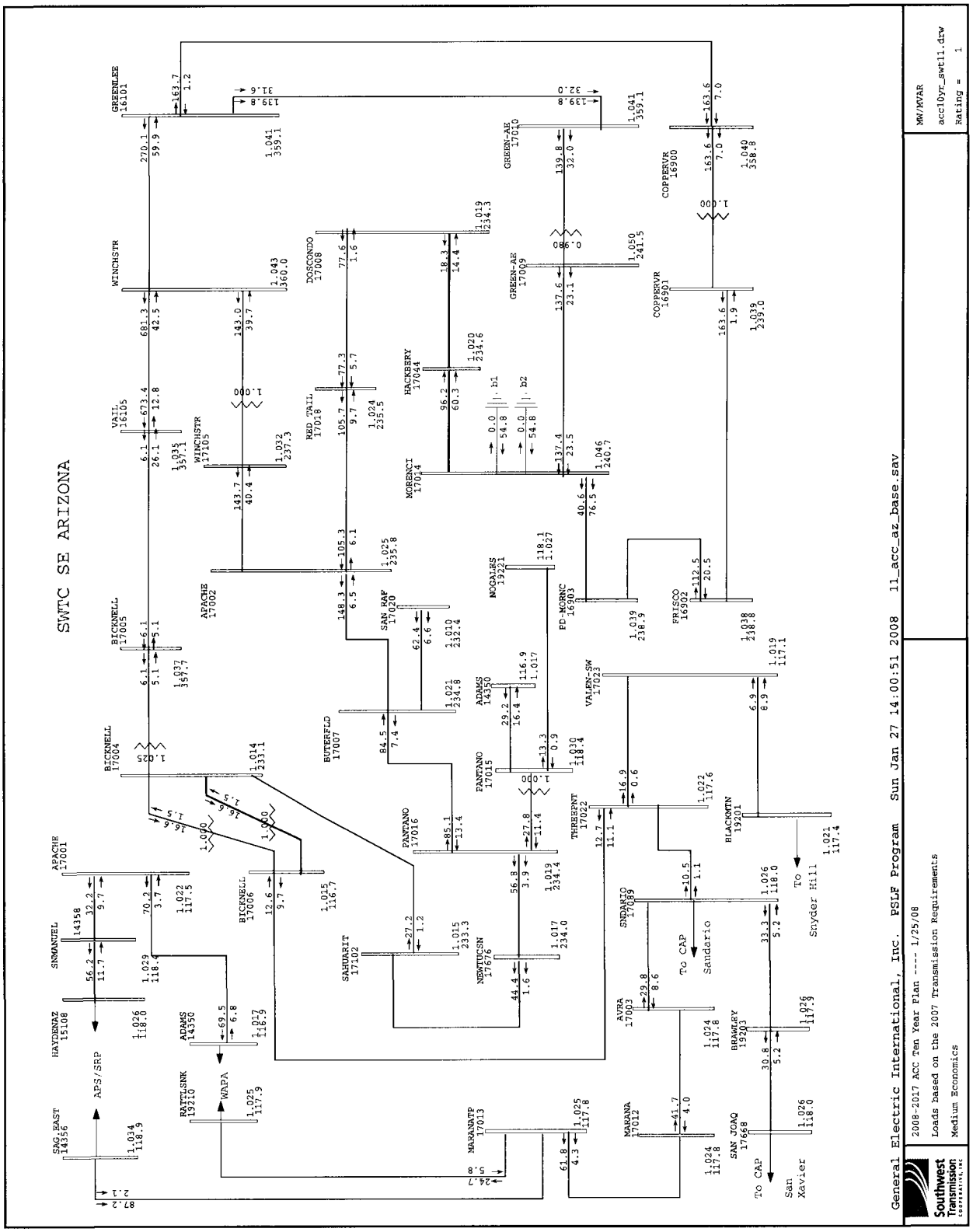

2011 Southwest Transmission Cooperative detail of SWTC's Western Area System with Naviska to Thornydale 115 kV line, Thornydale to Rattlesnake 115 kV line, Avra Valley to Sandario Tap 115 kV line upgrade and Sandario Tap to Three Points 115 kV line upgrade

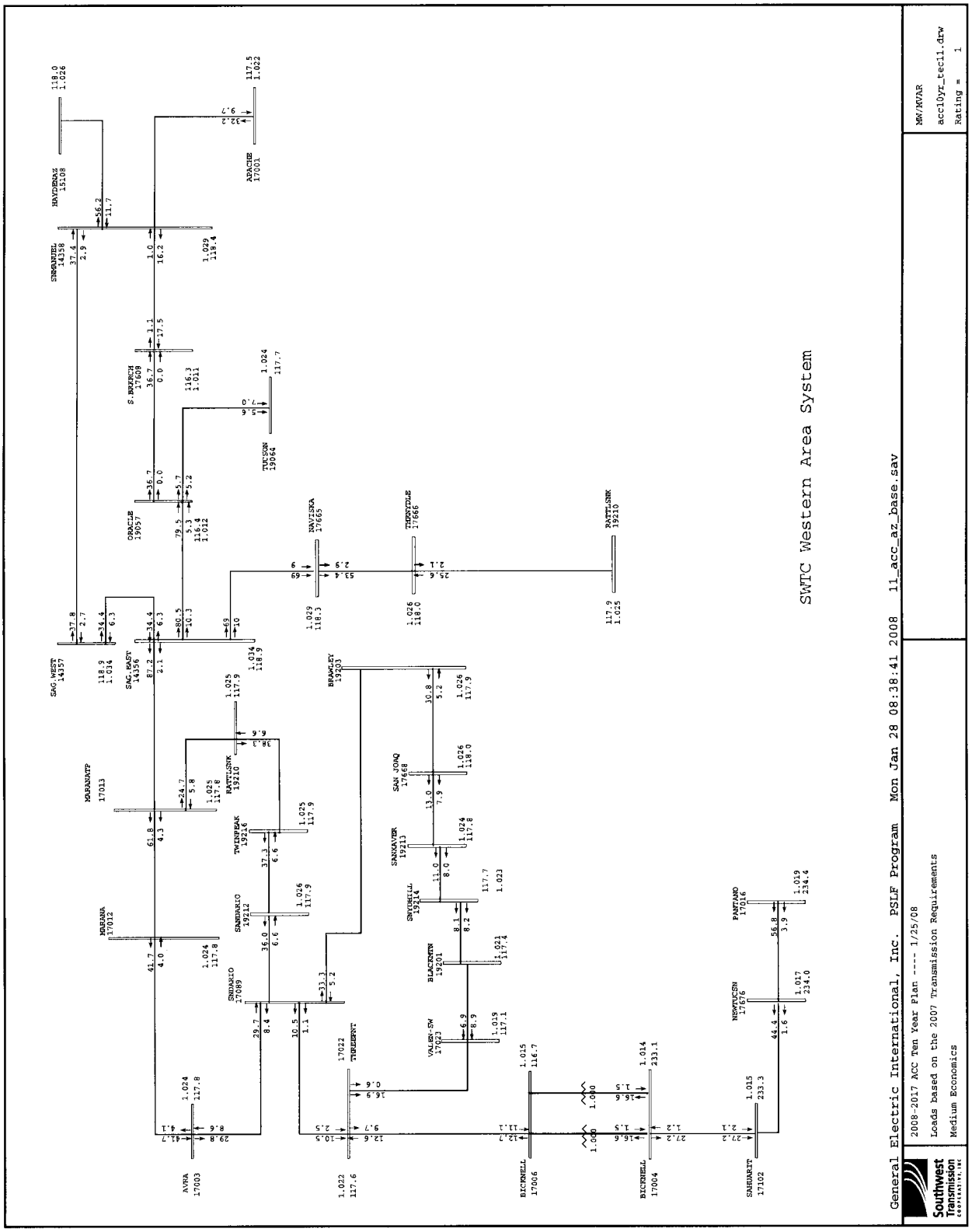

2012 Southwest Transmission Cooperative Base System with Marana Tap to Marana 115 kV line upgrade

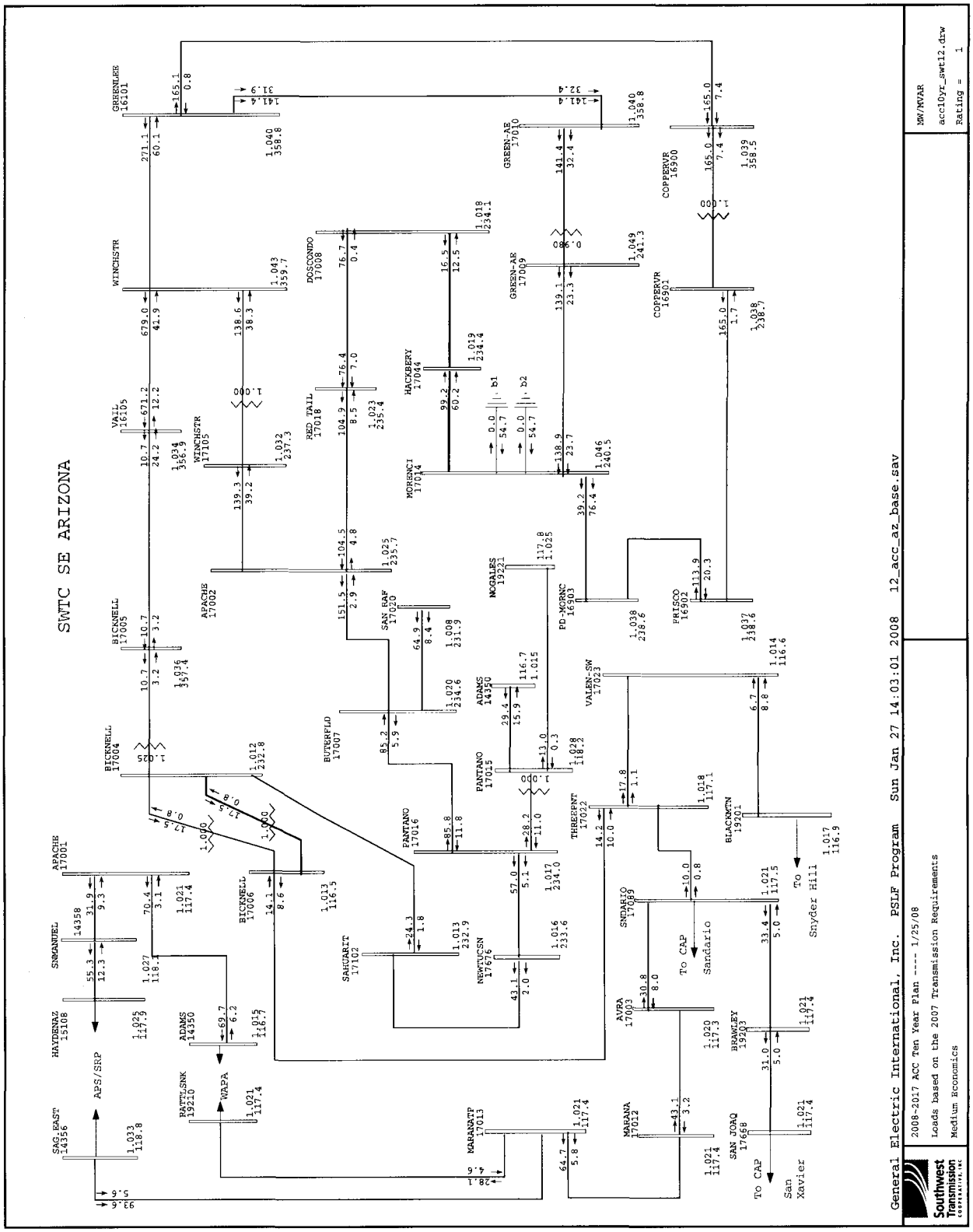

2012 Southwest Transmission Cooperative detail of SWTC's Western Area with Marana Tap to Marana 115 kV line upgrade

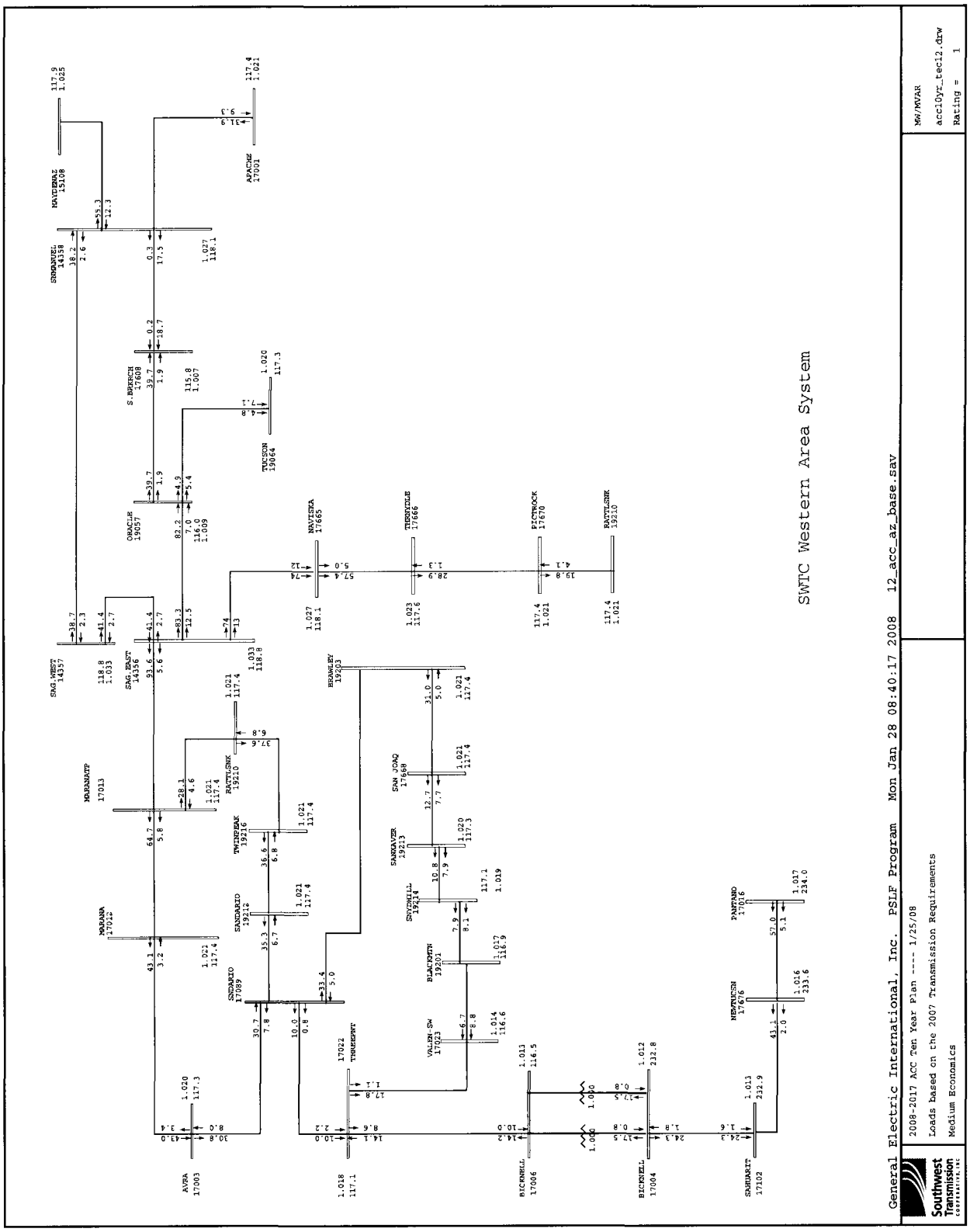

2013 Southwest Transmission Cooperative Base System with CS1 to Bicknell 230 kV line and CS1 to Three Points 115 kV line

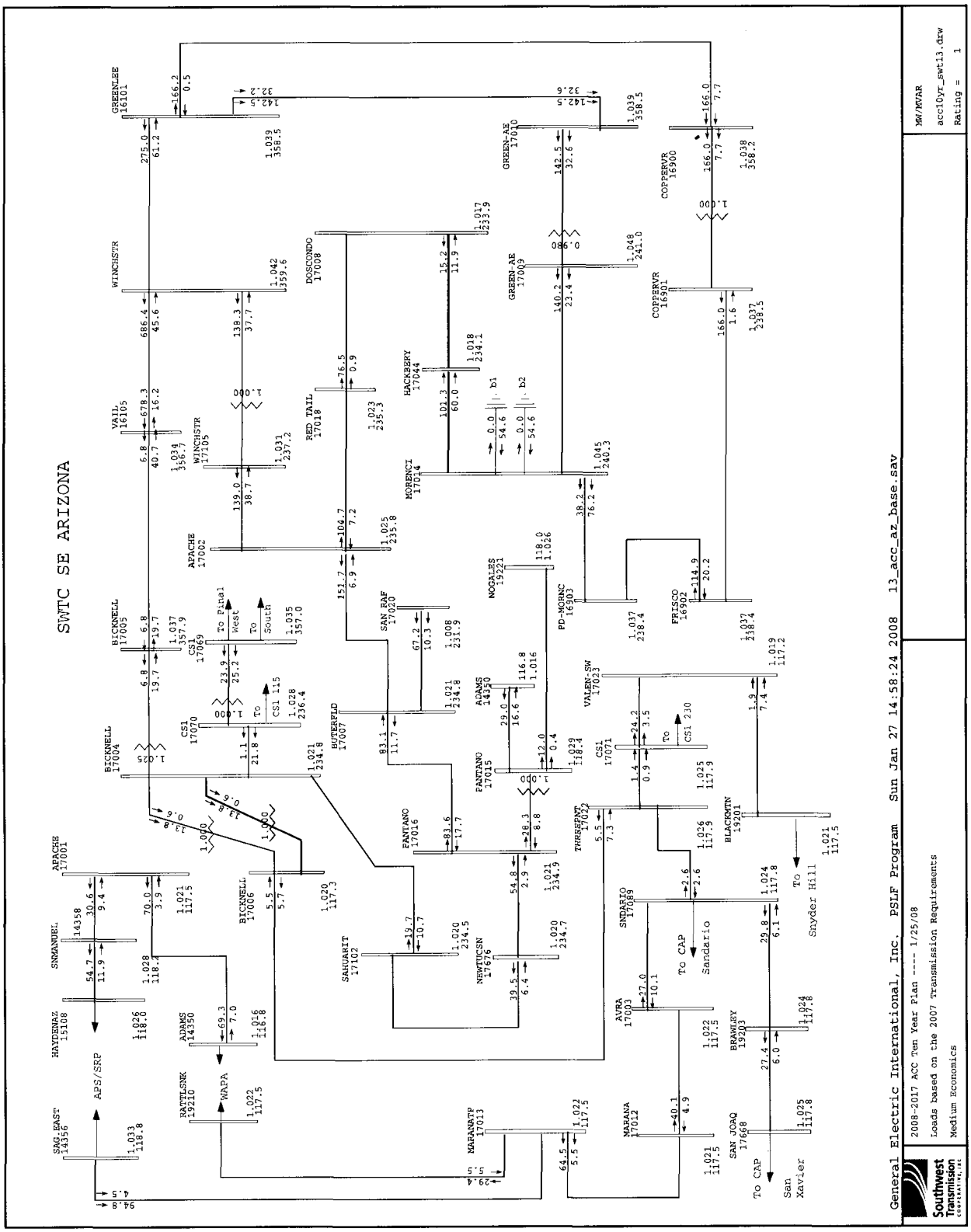

2013 Southwest Transmission Cooperative detail of SWTC's Western Area with CS1 to Bicknell 230 kV line and CS1 to Three Points 115 kV line

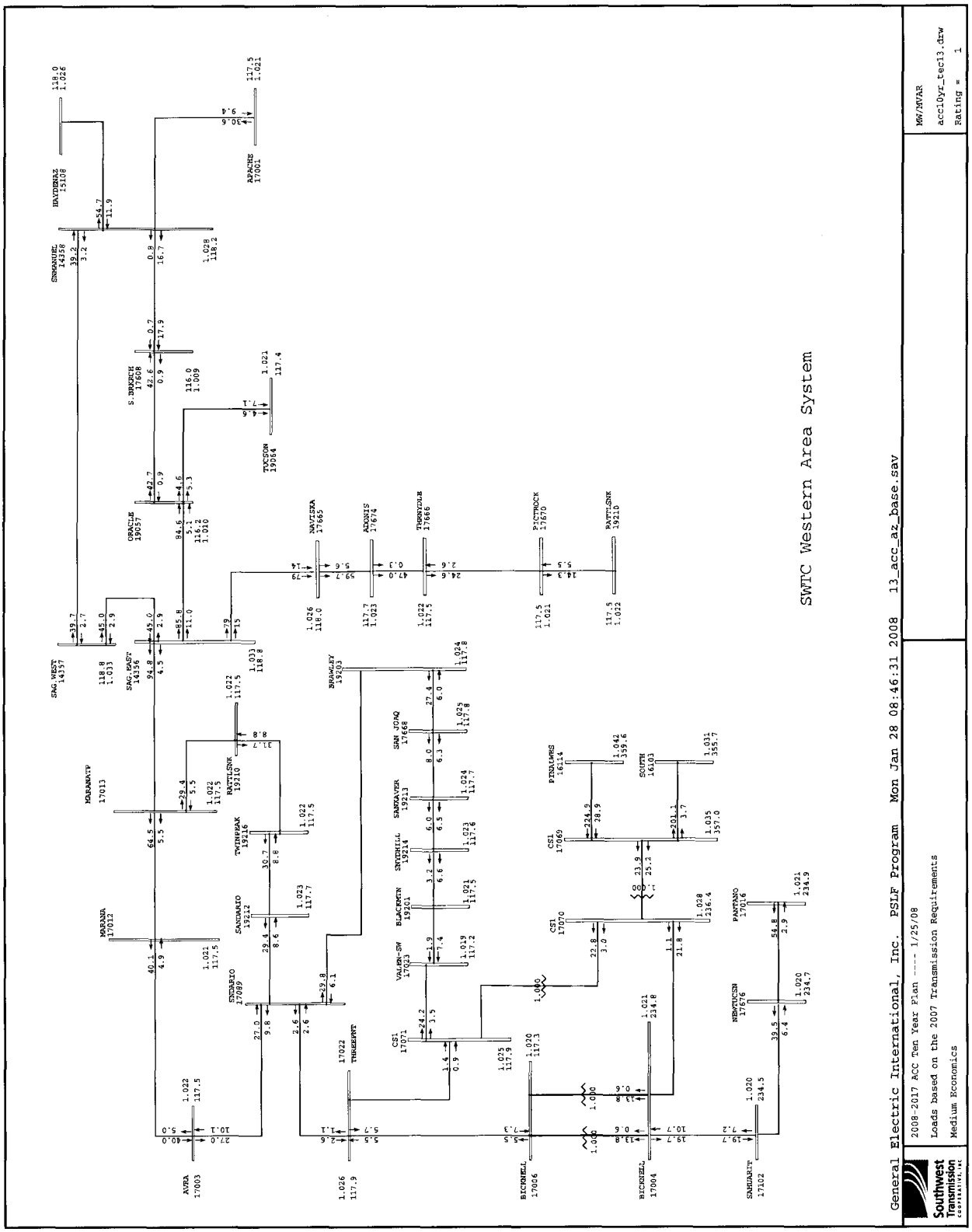

2015 Southwest Transmission Cooperative Base System

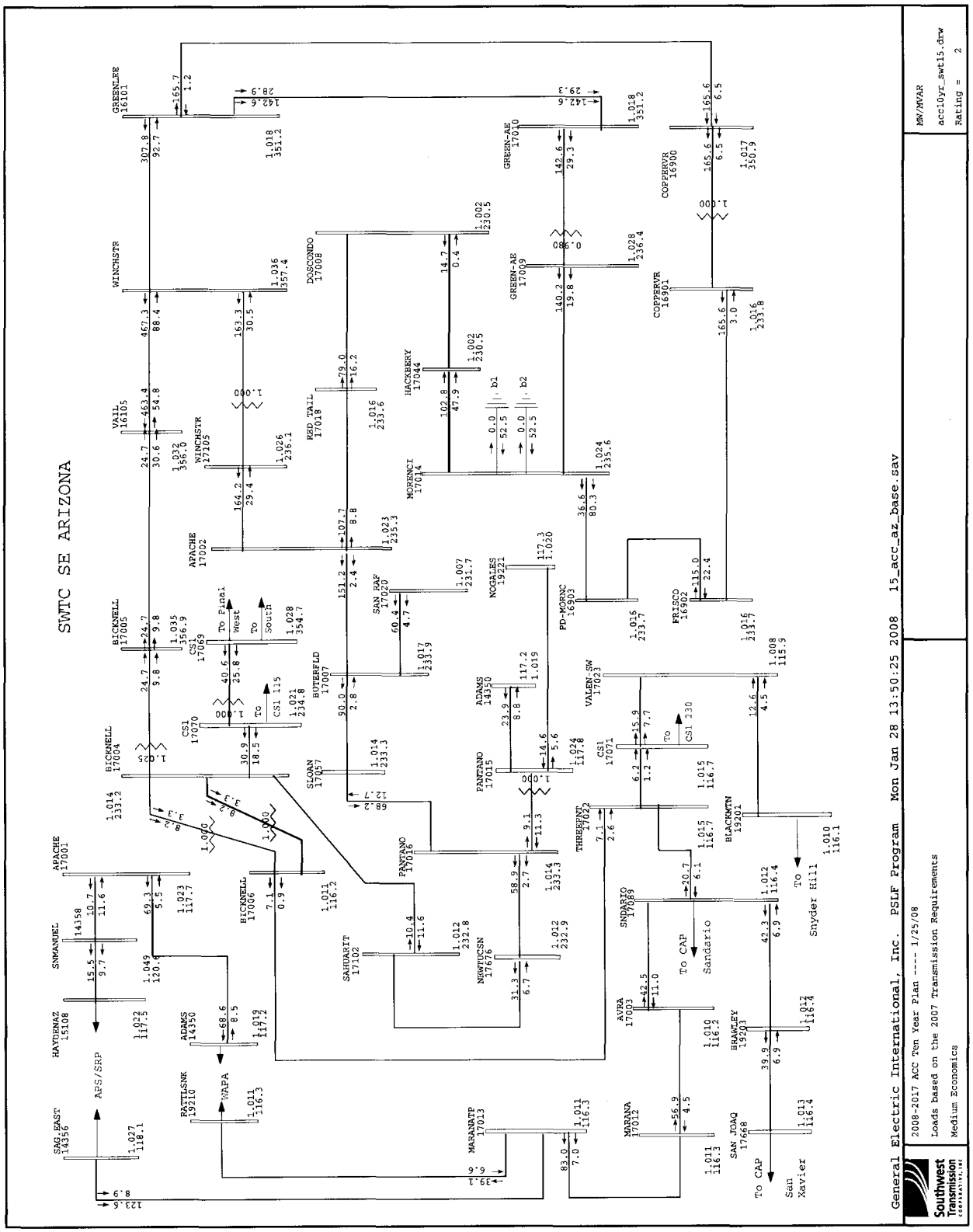

2015 Southwest Transmission Cooperative detail of SWTC's Western Area

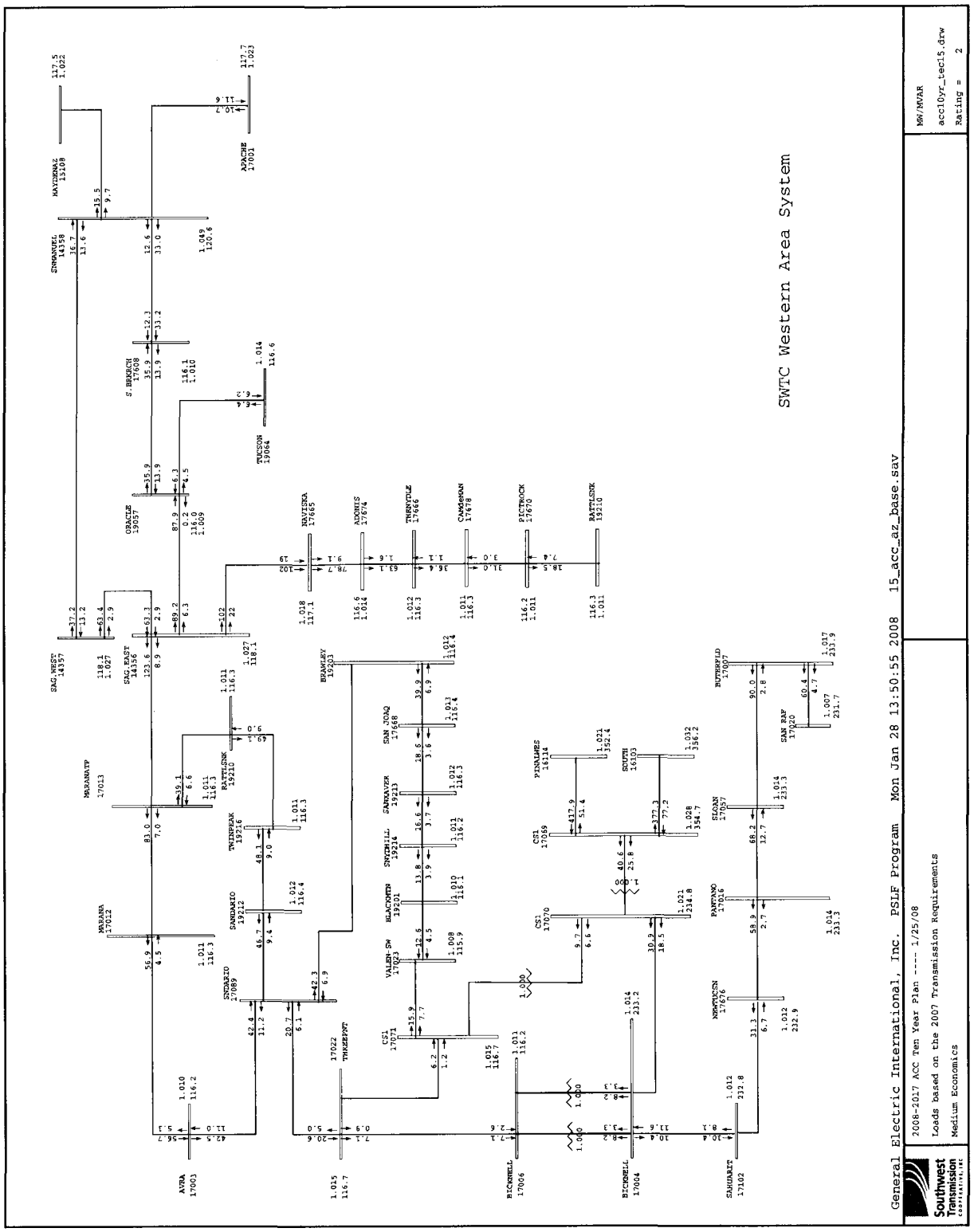

2016 Southwest Transmission Cooperative Base System with Sloan to Huachuca 230 kV line

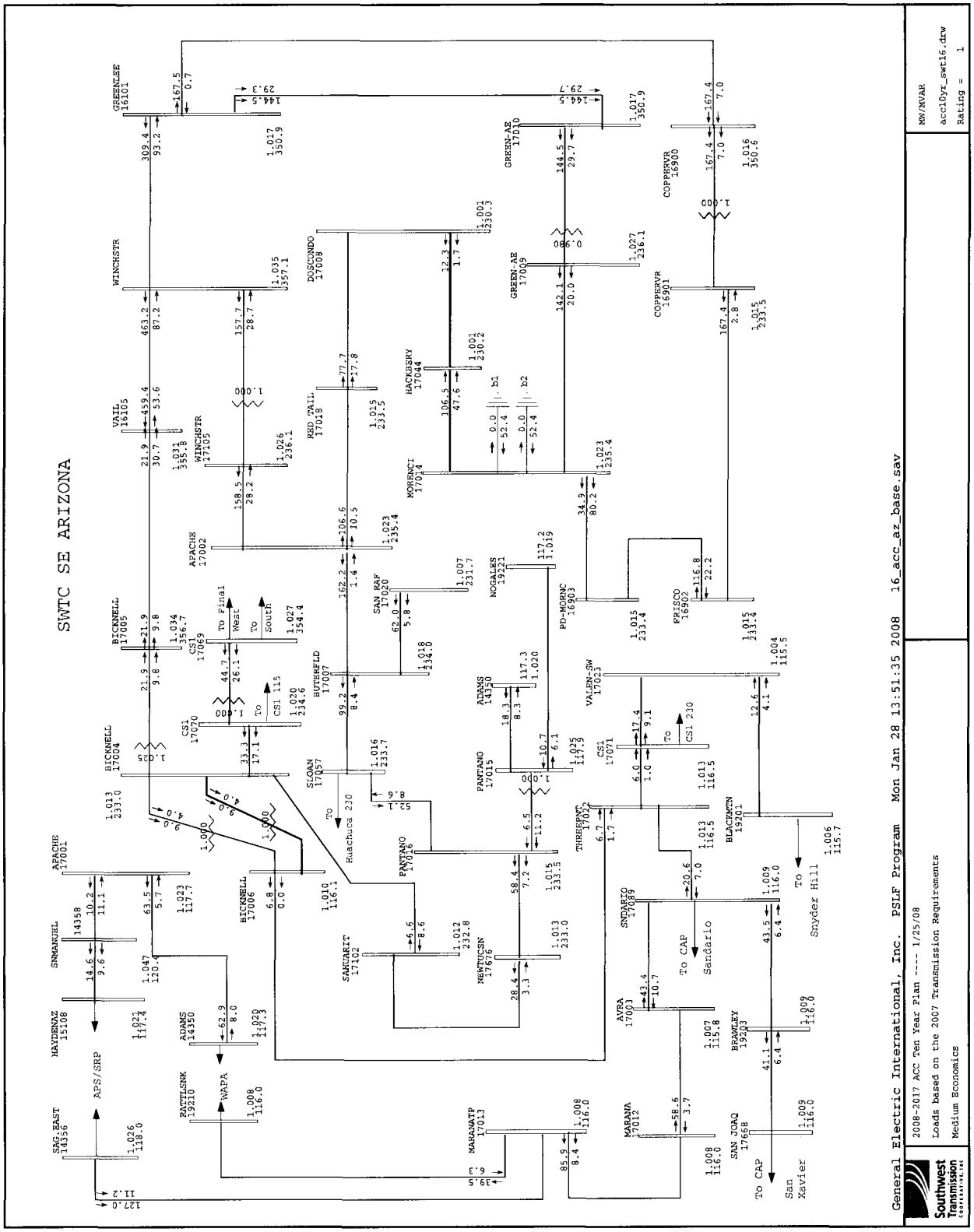

2016 Southwest Transmission Cooperative detail of SWTC's Western Area with Sloan to Huachuca 230 kV line

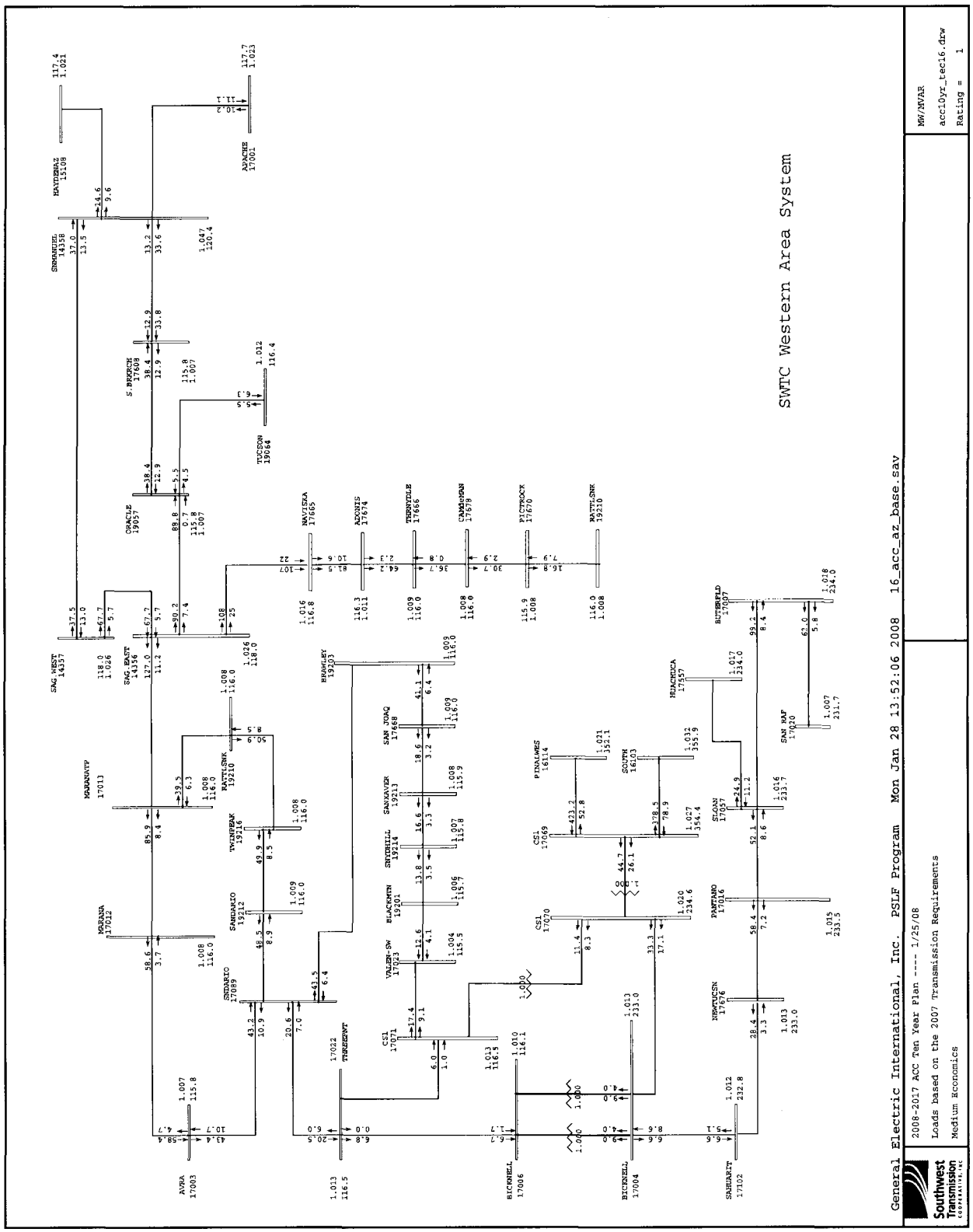

2017 Southwest Transmission Cooperative Base System with all planned projects

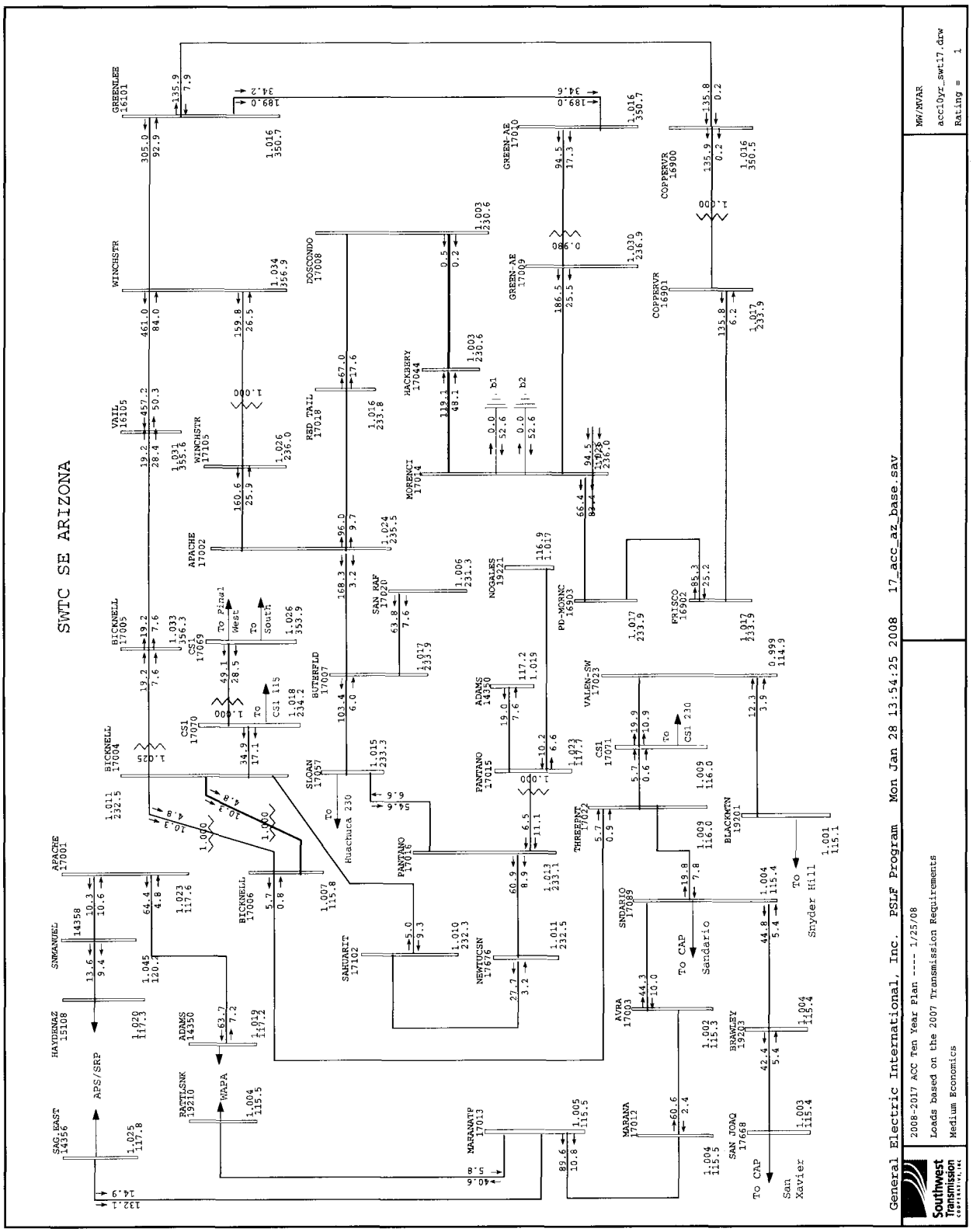

2017 Southwest Transmission Cooperative detail of SWTC's Western Area with all planned projects

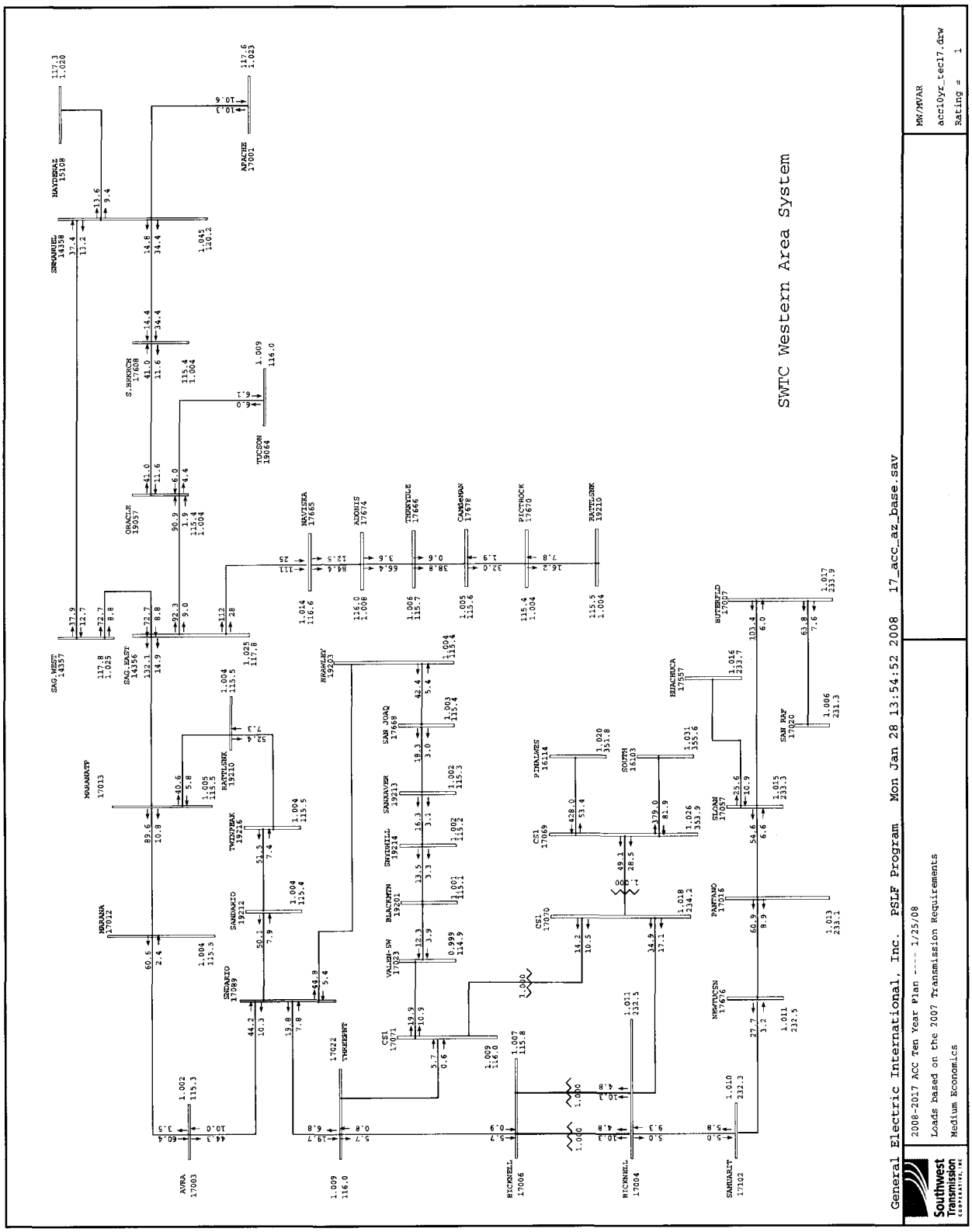

2017 Southwest Transmission Cooperative Base System with Apache-Butterfield 230 kV out of service

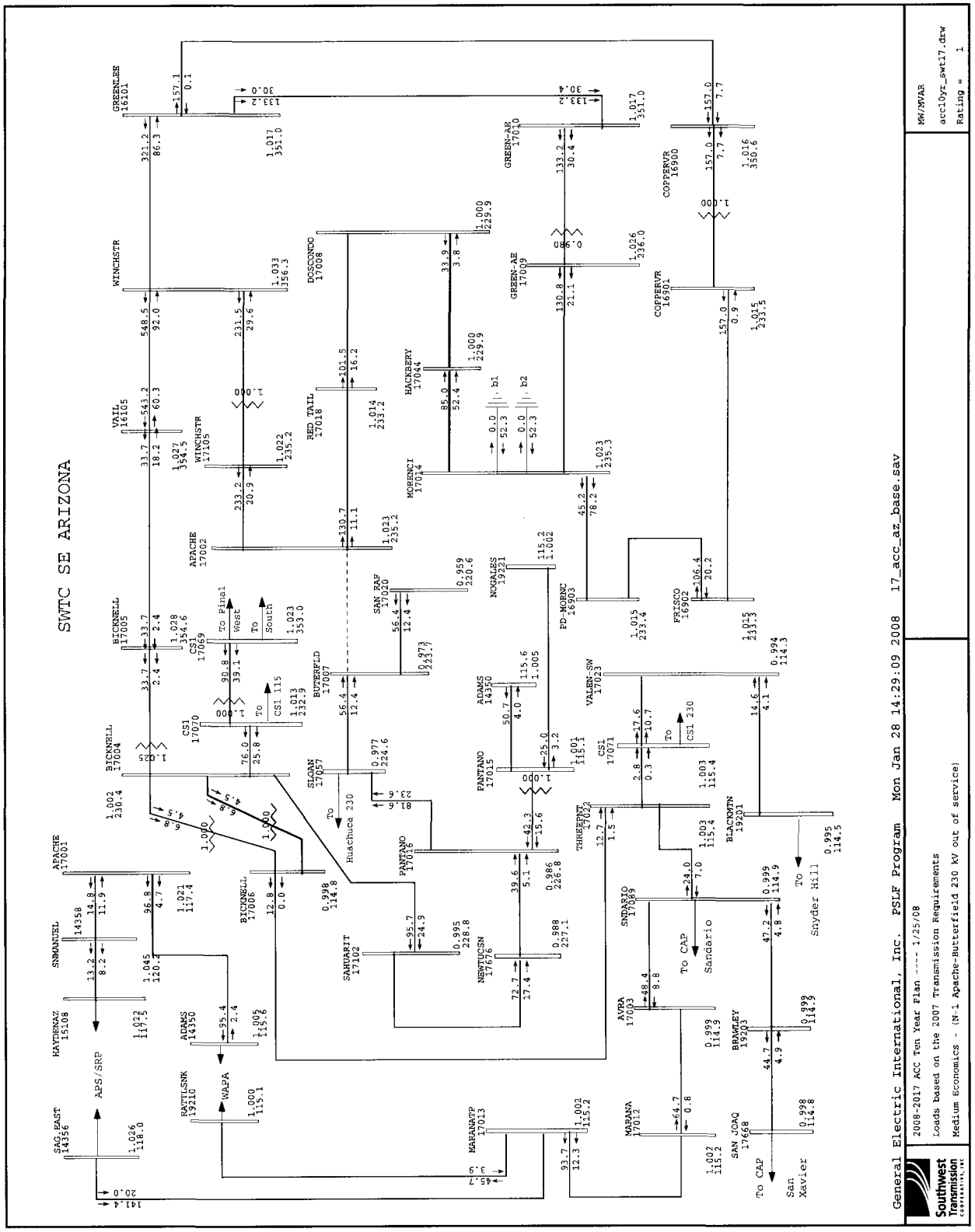

2017 Southwest Transmission Cooperative Base System with Apache-Redtail 230 kV out of service

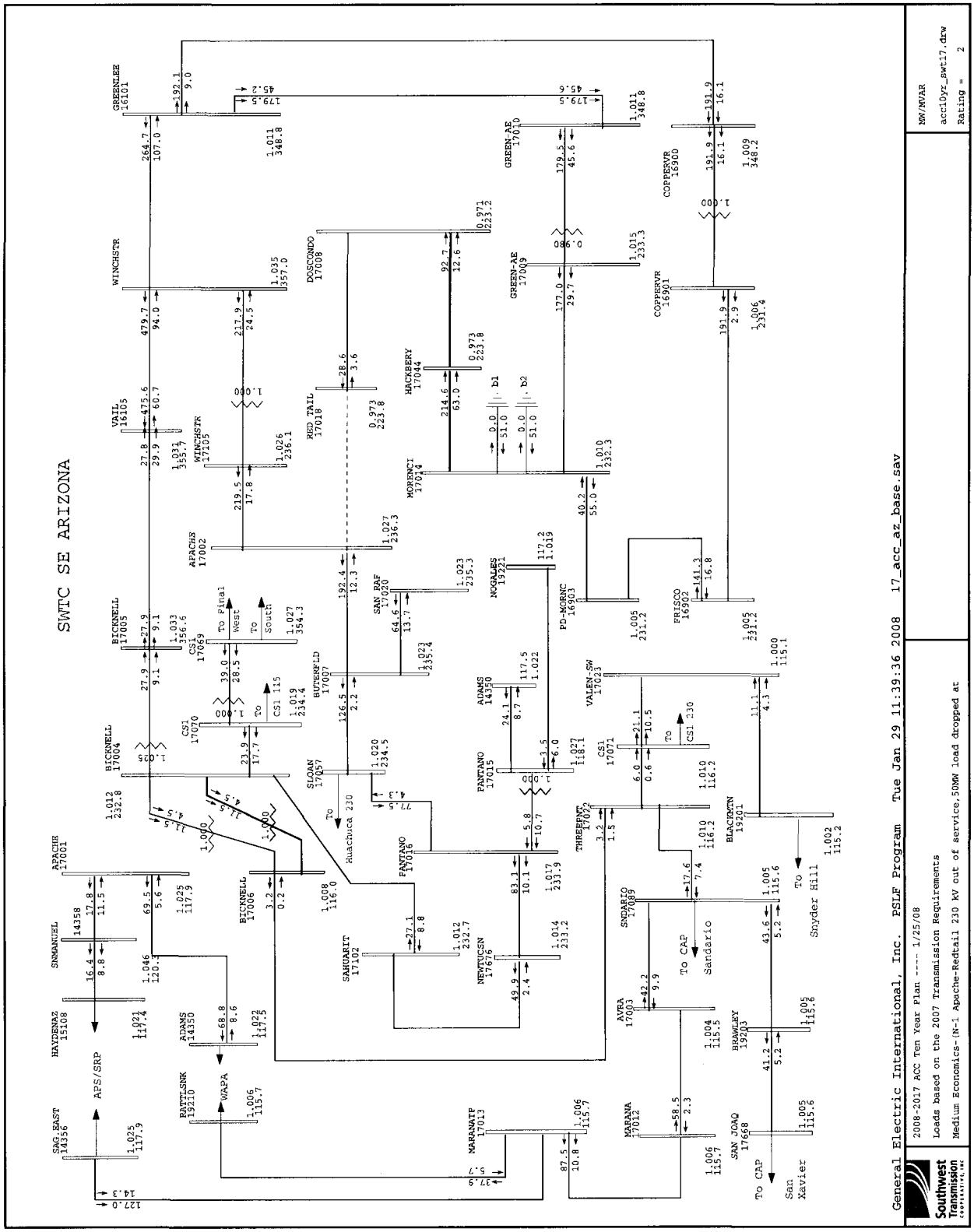

2017 Southwest Transmission Cooperative Base System with Apache-Winchester 230 kV out of service

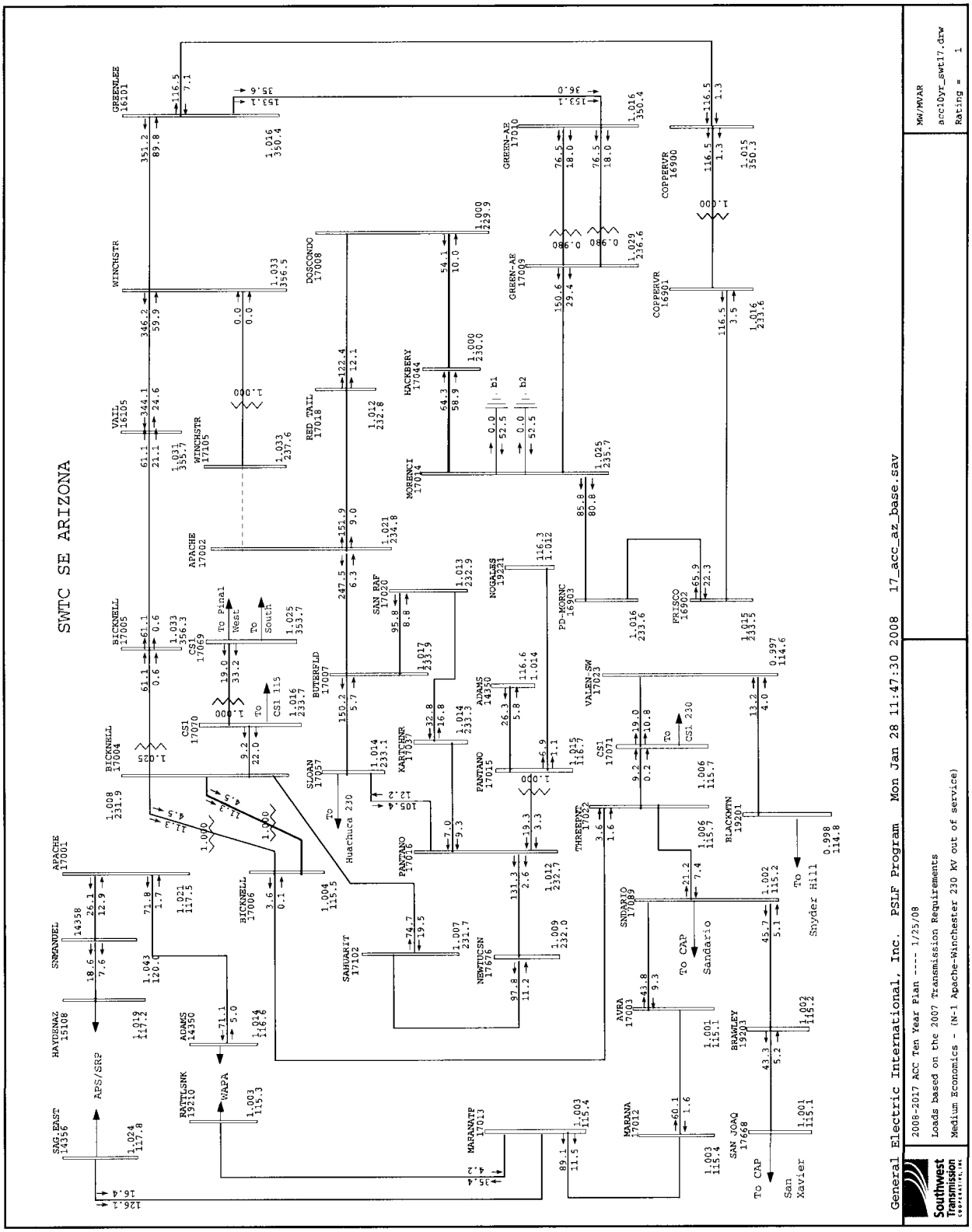

2017 Southwest Transmission Cooperative Base System with Bicknell-Sahuarita 230 kV out of service

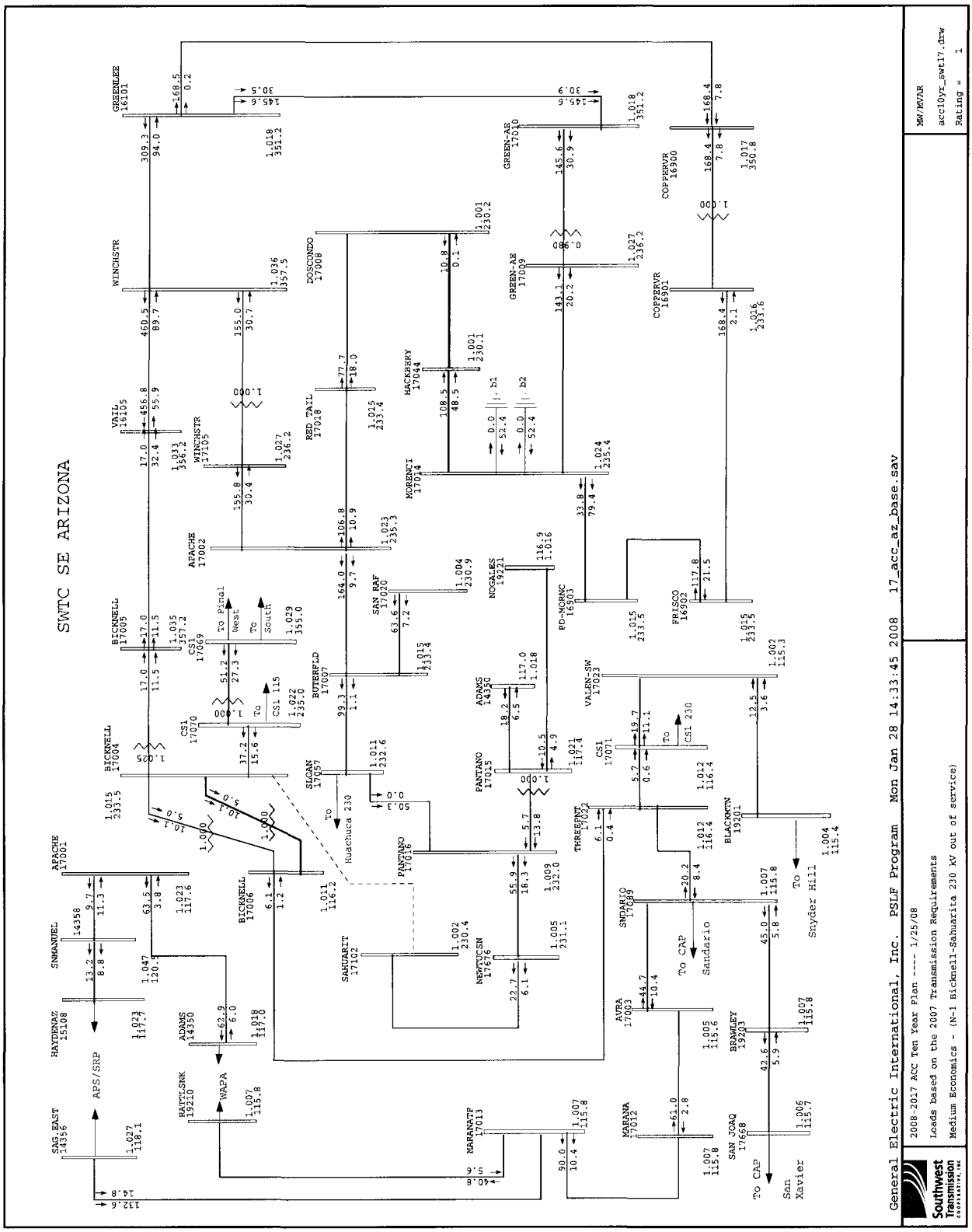

2017 Southwest Transmission Cooperative Base System with Bicknell-Vail 345 kV out of service

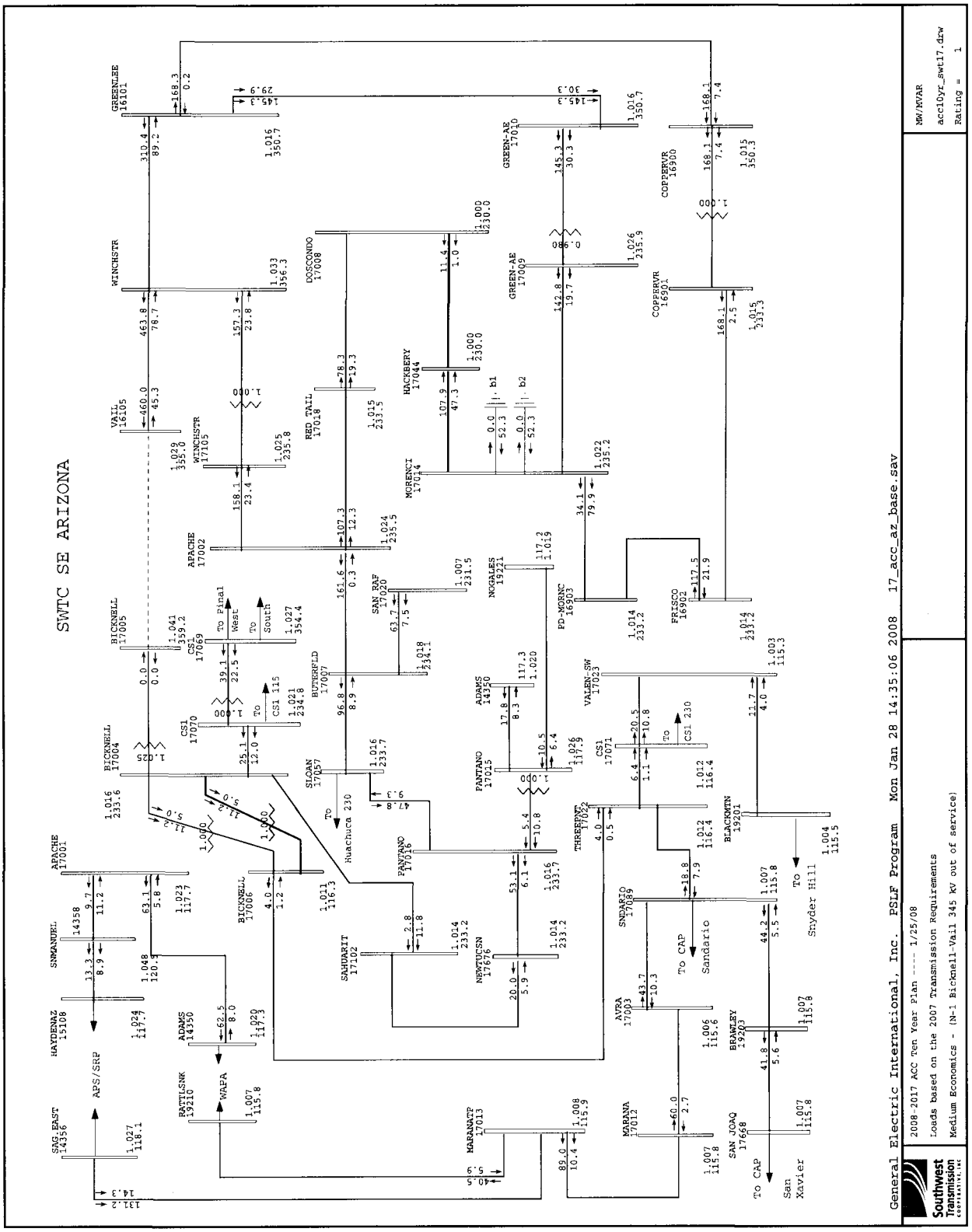

2017 Southwest Transmission Cooperative Base System with Butterfield-San Rafael 230 kV out of service

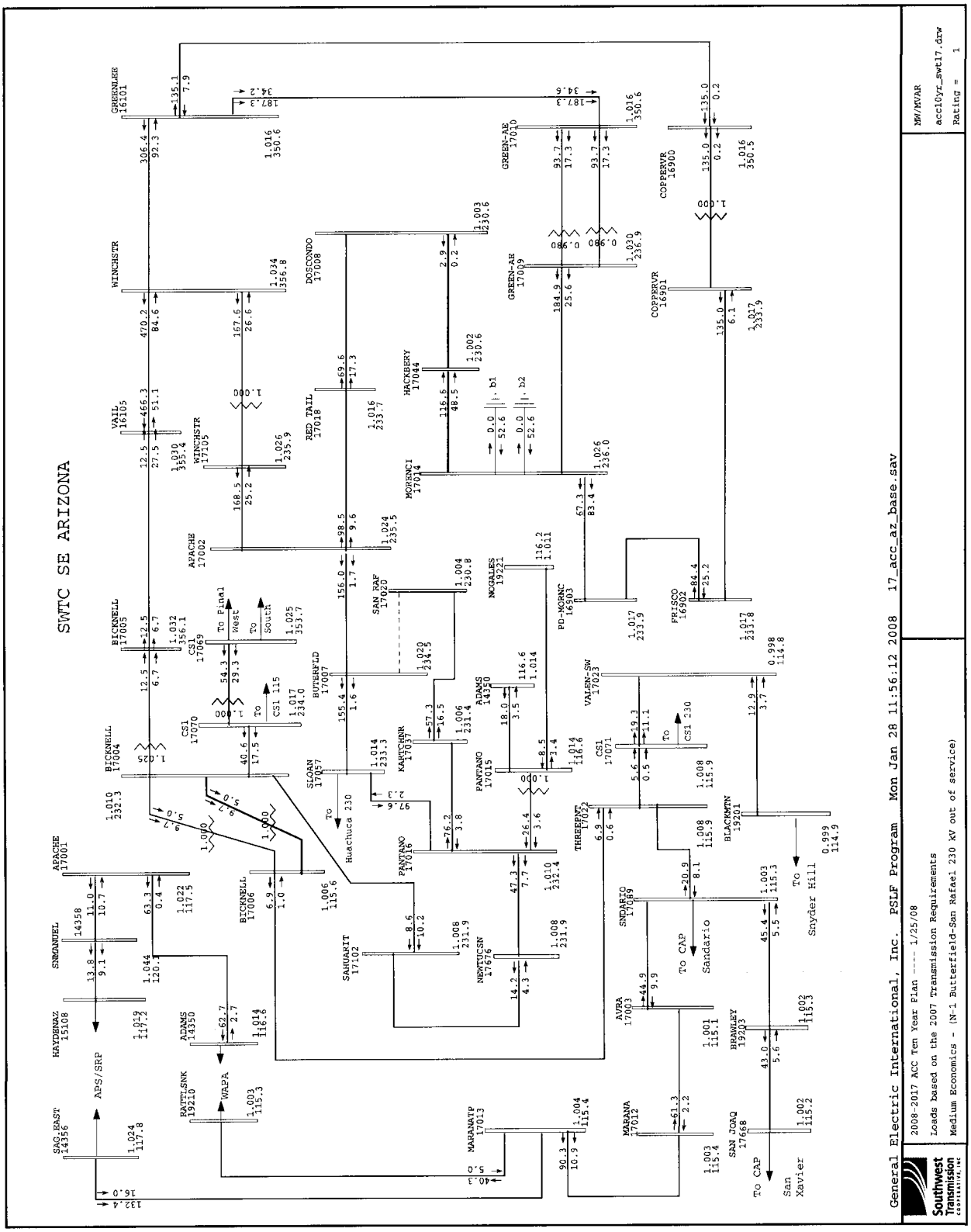
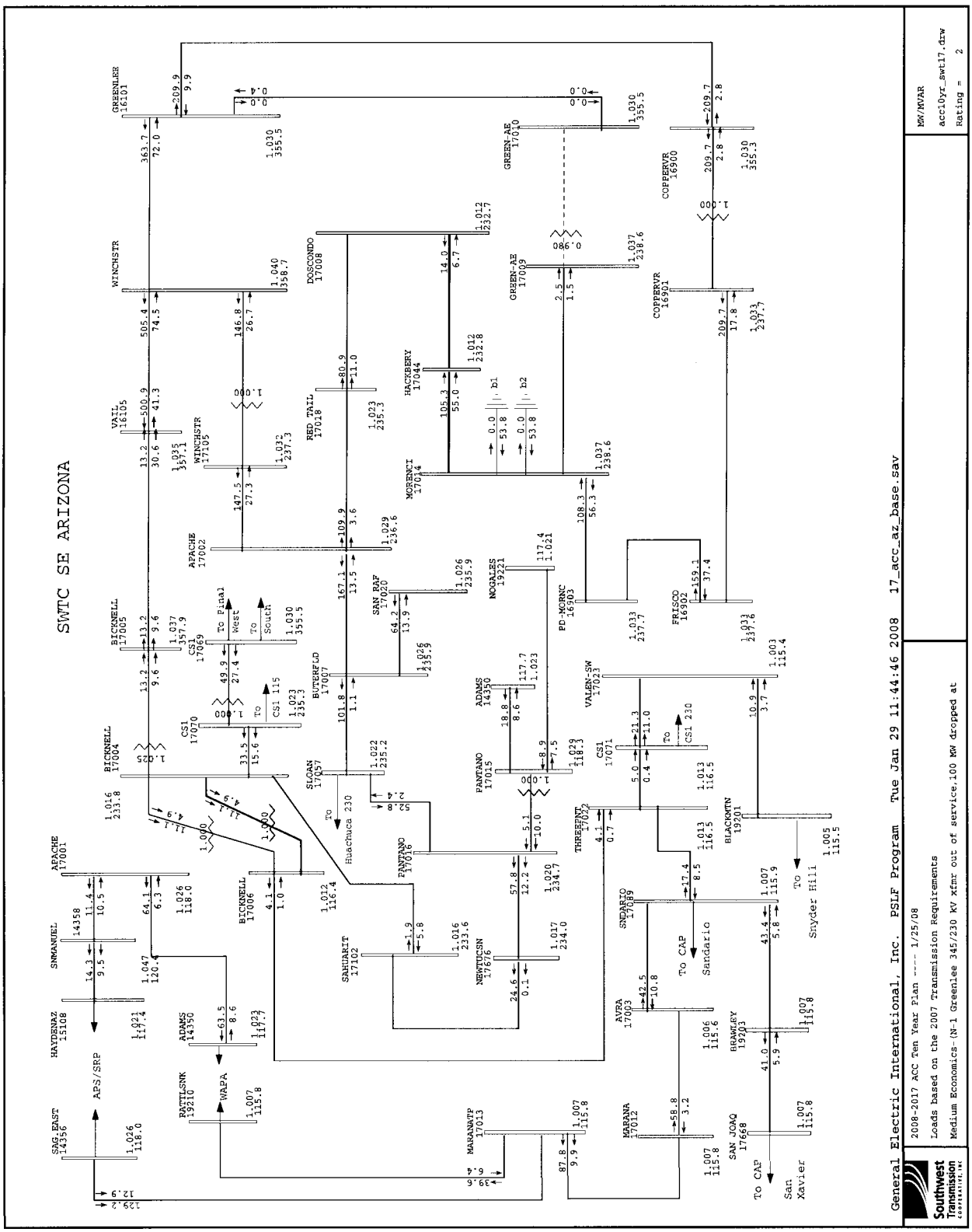
2017 Southwest Transmission Cooperative Base System with Greenlee 345/ 230 kV transformer out of service