ORIGINAL

0000079336

57

BEFORE THE ARIZONA POWER PLANT AND TRANSMISSION LINE SITING COMMITTEE

IN THE MATTER OF THE APPLICATION OF ARIZONA PUBLIC SERVICE COMPANY, IN CONFORMANCE WITH THE REQUIREMENTS OF ARIZONA REVISED STATUTES § 40-360, *et seq.*, FOR A CERTIFICATE OF ENVIRONMENTAL COMPATIBILITY AUTHORIZING THE PALO VERDE HUB TO NORTH GILA 500kV TRANSMISSION LINE PROJECT, WHICH INCLUDES A 500kV TRANSMISSION LINE AND ASSOCIATED FACILITIES AND INTER-CONNECTIONS ORIGINATING FROM EITHER THE ARLINGTON VALLEY ENERGY FACILITY, SECTION 17, TOWNSHIP 1 SOUTH, RANGE 6 WEST, G&SRB&M, THE HASSAYAMPA SWITCHYARD, SECTION 15, TOWNSHIP 1 SOUTH, RANGE 6 WEST, G&SRB&M, OR THE REDHAWK POWER PLANT, SECTION 23, TOWNSHIP 1 SOUTH, RANGE 6 WEST, G&SRB&M, EACH LOCATED SOUTH OF INTERSTATE 10 NEAR WINTERSBURG ROAD IN AN UNINCORPORATED AREA OF MARICOPA COUNTY, ARIZONA, TO THE NORTH GILA SUBSTATION, FIVE MILES NORTHEAST OF THE CITY OF YUMA, YUMA COUNTY, ARIZONA, AT SECTION 11, TOWNSHIP 8 SOUTH, RANGE 22 WEST, G&SRB&M	Docket No. L-00000D-07-0566-00135 Case No. 135

Arizona Corporation Commission
DOCKETED
DEC - 3 2007
DOCKETED BY nr

RECEIVED
2007 DEC -3 P 4: 28
AZ CORP COMMISSION
DOCKET CONTROL

NOTICE OF FILING CERTIFICATE OF ENVIRONMENTAL COMPATIBILITY

The Arizona Power Plant and Transmission Line Siting Committee hereby gives notice of filing its decision and order, approving the application of Arizona Public Service Company, for a Certificate of Environmental Compatibility.

The Decision and Order are in the form attached hereto.

Dated this 3rd day of December, 2007.

ARIZONA POWER PLANT AND
TRANSMISSION LINE SITING COMMITTEE

By: Laurie A. Woodall
Laurie A. Woodall, Chairman
Assistant Attorney General

Pursuant to A.A.C. R14-3-204,
the Original CEC was lodged with the
Office of the Executive Director this 3RD
day of December, 2007.

Pursuant to A.A.C. R14-3-204,
the original and twenty-five copies
of this Notice were filed this 3RD day
of December, 2007, with:

Docket Control
Arizona Corporation Commission
1200 West Washington Street
Phoenix, AZ 85007

COPIES of the foregoing Notice
mailed/hand-delivered this
3RD day of December, 2007, to:

Kelly J. Barr, Esq.
Manager, Regulatory Affairs & Contracts
Salt River Project
P.O. Box 52025
Phoenix, AZ 85072-2025

Paul Herndon
Transmission Line and Facility Siting Group
Arizona Public Service
P.O. Box 53933
Mail Station 4609
Phoenix, AZ 85072-3933

Bert Acken, Esq.
Thomas H. Campbell, Esq.
Lewis and Roca
Two Renaissance Square
40 North Central Avenue
Phoenix, AZ 85004-4429
Attorneys for APS

Keith A. Layton, Esq.
Charles H. Hains, Esq.
Legal Division
Arizona Corporation Commission
1200 West Washington Street
Phoenix, AZ 85007

100240

BEFORE THE ARIZONA POWER PLANT AND TRANSMISSION LINE SITING COMMITTEE

IN THE MATTER OF THE APPLICATION OF ARIZONA PUBLIC SERVICE COMPANY, IN CONFORMANCE WITH THE REQUIREMENTS OF ARIZONA REVISED STATUTES § 40-360, *et seq.*, FOR A CERTIFICATE OF ENVIRONMENTAL COMPATIBILITY AUTHORIZING THE PALO VERDE HUB TO NORTH GILA 500kV TRANSMISSION LINE PROJECT, WHICH INCLUDES A 500kV TRANSMISSION LINE AND ASSOCIATED FACILITIES AND INTER-CONNECTIONS ORIGINATING FROM EITHER THE ARLINGTON VALLEY ENERGY FACILITY, SECTION 17, TOWNSHIP 1 SOUTH, RANGE 6 WEST, G&SRB&M, THE HASSAYAMPA SWITCHYARD, SECTION 15, TOWNSHIP 1 SOUTH, RANGE 6 WEST, G&SRB&M, OR THE REDHAWK POWER PLANT, SECTION 23, TOWNSHIP 1 SOUTH, RANGE 6 WEST, G&SRB&M, EACH LOCATED SOUTH OF INTERSTATE 10 NEAR WINTERSBURG ROAD IN AN UNINCORPORATED AREA OF MARICOPA COUNTY, ARIZONA, TO THE NORTH GILA SUBSTATION, FIVE MILES NORTHEAST OF THE CITY OF YUMA, YUMA COUNTY, ARIZONA, AT SECTION 11, TOWNSHIP 8 SOUTH, RANGE 22 WEST, G&SRB&M	Docket No. L-00000D-07-0566-0135 Case No. 135

CERTIFICATE OF ENVIRONMENTAL COMPATIBILITY

Pursuant to notice given as provided by law, the Arizona Power Plant and Transmission Line Siting Committee (the "Committee") held public hearings on November 19 and 20, 2007, all in conformance with the requirements of Arizona Revised Statutes ("A.R.S.") § 40-360, *et seq.,* for the purpose of receiving evidence and

deliberating on the Application of Arizona Public Service Company ("Applicant") for a Certificate of Environmental Compatibility ("Certificate") in the above-captioned case (the "Project").

The following members and designees of members of the Committee were present at one or more of the hearings for the evidentiary presentations and/or for the deliberations:

Laurie Woodall	Chairman, Designee for Arizona Attorney General, Terry Goddard
David L. Eberhart, P.E.	Designee for Chairman, Arizona Corporation Commission
Jack Haenichen	Designee for Director, Energy Department, Arizona Department of Commerce
Paul Rasmussen	Designee for Director, Arizona Department of Environmental Quality
Jeff McGuire	Appointed Member
Michael Palmer	Appointed Member
Joy Rich	Appointed Member
Michael Whalen	Appointed Member
Barry Wong	Appointed Member

The Applicant was represented by Thomas H. Campbell and Albert H. Acken of Lewis and Roca LLP. The following parties were granted intervention pursuant to A.R.S. § 40-360.05: Arizona Corporation Commission ("Commission") Staff, represented by Charles Hains.

At the conclusion of the hearings, the Committee, having received the Application, the appearances of the parties, the evidence, testimony and exhibits presented at the hearings, and being advised of the legal requirements of A.R.S. §§ 40-360 to 40-360.13,

upon motion duly made and seconded, voted unanimously to grant the Applicant this Certificate of Environmental Compatibility (Case No. 135) for the Project.

The Project consists of approximately 110 miles of 500kV transmission line and required switchyard facilities and modifications. The Project Route (depicted on **Exhibit A** attached hereto) originates at one of the following: the Arlington Valley Energy Facility (Line Siting Case No. 98) located in Section 17, Township 1 South, Range 6 West, the Hassayampa Switchyard (Line Siting Case No. 110) located in Section 15, Township 1 South, Range 6 West, or the Redhawk Power Plant (Line Siting Case No. 95) located in Section 23, Township 1 South, Range 6 West.

If the Project originates at the Arlington Valley Energy Facility, the Project will have a 2,000-foot corridor (shown as Link 40 on **Exhibit A**) 1,000 feet on either side of a centerline, which proceeds east from the Arlington Valley Energy Facility along the southern edge of the north half of the northeast quarter of Section 17, and turns south along the eastern edge of Sections 17, 20, and 29, Township 1 South, Range 6 West G&SRB&M until reaching a common point for all route options, located at the eastern edge of Section 29, Township 1 South, Range 6 West G&SRB&M, 130 feet north of the Southwest Power Link ("SWPL") 500kV transmission line (Line Siting Case No. 52).

If the Project originates at the Hassayampa Switchyard, the Project will have a 2,000-foot corridor (Links 10 and 30) 1,000 feet on either side of the SWPL 500kV transmission line, centerline through Sections 15, 22, 27, and 28, Township 1 South, Range 6 West G&SRB&M, proceeding south to the common point described above.

If the Project originates at the Redhawk Power Plant, the Project will have a 2,000-foot corridor (Link 20) 1,000 feet on either side of the centerline, which proceeds west from the Redhawk Power Plant along the northern section line of Sections 23 and 22, Township 1 South, Range 6 West G&SRB&M, to the beginning of Link 30, located at the

midsection line of Section 22, Township 1 South, Range 6 West G&SRB&M, proceeding south to the common point described above.

All three interconnection options proceed to the beginning of Link 50, described as the common point above. For Link 50, the Project has a 2,000-foot corridor, which begins at the centerline of the existing SWPL 500kV transmission line and extends 2,000 feet north. From this location, the route proceeds generally southwest parallel to the SWPL 500kV transmission line. Link 50 terminates at the existing North Gila Substation located five miles northeast of the City of Yuma, in Section 11, Township 8 South, Range 22 West G&SRB&M. Conceptual models of tower types are depicted in Exhibits G-1 through G-8 of the application, attached hereto as **Exhibit B**.

This Certificate is granted upon the following conditions:

1. The Applicant shall obtain all required approvals and permits necessary to construct the Project.
2. The Applicant shall comply with all existing applicable ordinances, master plans and regulations of the State of Arizona, the County of Maricopa, the County of Yuma, the United States, and any other governmental entities having jurisdiction.
3. This authorization to commence construction of the Project shall expire seven years from the date the Certificate is approved by the Commission; provided, however, that prior to such expiration the Applicant or its assignees may request that the Commission extend this time limitation.
4. The Applicant shall make every reasonable effort to identify and correct, on a case-specific basis, all complaints of interference with radio or television signals from operation of the transmission line and related facilities addressed in this Certificate. The Applicant shall maintain written records for a period of five years of all complaints of radio or television interference

attributable to operation, together with the corrective action taken in response to each complaint. All complaints shall be recorded to include notations on the corrective action taken. Complaints not leading to a specific action or for which there was no resolution shall be noted and explained.

5. The Project shall comply with the following recommendations of the Arizona Game and Fish Department ("AGFD"):
   (a) Wildlife data collected by the biological monitor will be given to the AGFD's Heritage Data Management System.
   (b) Where possible, leave large vegetation intact to reduce habitat impact and promote regeneration.
   (c) Coordinate plant salvage efforts with the Arizona Department of Agriculture, in accordance with the Arizona Native Plant Law. In addition, the applicable land management agencies should be consulted regarding guidelines for revegetation efforts.
6. Pursuant to A.R.S. § 41-844, if any archaeological, paleontological or historical site or object that is at least fifty years old is discovered on state, county or municipal land during plan-related activities, the person in charge shall promptly report the discovery to the Director of the Arizona State Museum, and in consultation with the Director, shall immediately take all reasonable steps to secure and maintain the preservation of the discovery. If human remains and/or funerary objects are encountered on private land during the course of any ground-disturbing activities relating to the development of the subject property, Applicant shall cease work on the affected area of the Project and notify the Director of the Arizona State Museum pursuant to A.R.S. § 41-865.

7. The Applicant shall design the transmission lines so as to mitigate impacts to raptors.
8. The Applicant shall use non-specular conductor and dulled surfaces for transmission line structures.
9. Within 120 days of the Commission decision granting this Certificate, Applicant will post signs in public rights-of-way giving notice of the Project corridor to the extent authorized by law. Within 45 days of securing easement or right-of-way for the Project, the Applicant shall erect and maintain signs providing public notice that the property is the site of a future transmission line. Such signage shall be no smaller than a normal roadway sign. The Applicant shall place signs in prominent locations at reasonable intervals such that the public is notified along the full length of the transmission line until the transmission structures are constructed. The signs shall advise:
   (a) That the site has been approved for the construction of Project facilities;
   (b) The expected date of completion of the Project facilities;
   (c) A phone number for public information regarding the Project;
   (d) The name of the Project;
   (e) The name of the Applicant; and
   (f) The Applicant's website.

   Sign placement will be reported annually in accordance with Condition 16.
10. In the event that the Project requires an extension of the term of this Certificate prior to completion of construction, Applicant shall use reasonable means to directly notify all landowners and residents within a one-half mile of the Project corridor for which the extension is sought. Such

landowners and residents shall be notified of the time and place of the proceeding in which the Commission shall consider such request for extension.

11. Before construction on this Project may commence, the Applicant must file a Plan of Development approved by the Bureau of Land Management ("BLM") with Docket Control with copies to the affected areas of jurisdiction. Applicant will comply with the BLM's Standard Construction and Operating Procedures and Mitigation Measures and Other Mitigation Measures as outlined in the Finding of No Significant Impact, attached hereto as **Exhibit C**.

12. Applicant shall retain a qualified biologist to monitor all ground clearing/disturbing construction activities that may affect sensitive species or habitat. The biological monitor will be responsible for ensuring proper actions are taken if a special status species is encountered. If Sonoran desert tortoises are encountered during construction, the Applicant shall follow the AGFD's Guidelines for Handling Sonoran Desert Tortoises.

13. With respect to the Project, Applicant shall participate in good faith in state and regional transmission study forums to coordinate transmission expansion plans related to the Project and to resolve transmission constraints in a timely manner.

14. The Applicant shall provide copies of this Certificate to the Yuma County Planning and Zoning Commission, the Maricopa County Planning and Development Department, the Arizona State Land Department, the State Historic Preservation Office, and AGFD.

15. Prior to the date this transmission line is put into commercial service, the Applicant shall provide homebuilders and developers within one mile of the

center line of the Certificate route the identity, location, and a pictorial depiction of the type of power line being constructed, accompanied by a written description, and encourage the developers and homebuilders to include this information in the developers' and homebuilders' homeowners' disclosure statements.

16. The Applicant shall submit a self-certification letter annually, identifying progress made with respect to each condition contained in the Certificate, including which conditions have been met. Each letter shall be submitted to the Utilities Division Director on December 1 beginning in 2008. Attached to each certification letter shall be documentation explaining how compliance with each condition was achieved. Copies of each letter along with the corresponding documentation shall be submitted to the Arizona Attorney General and Department of Commerce Energy Office. The requirement for the self-certification shall expire on the date the Project is placed into operation.

17. Applicant shall work in good faith with the Yuma Proving Ground commanding officer regarding the final right-of-way on that portion of the route within the Yuma Proving Ground.

18. Within the Project area, construction activities will avoid to the extent practicable designated wildlife water sources to allow free access by Bighorn Sheep.

19. Applicant shall conform to Western Electricity Coordinating Council/North American Electric Reliability Corporation N-1 and N-1-1 contingency planning criteria. N-1 contingency shall not result in any load dropping or generation tripping.

20. Except when entering switchyards and substations, the minimum spacing between the center lines of the two 500 kV systems should be the greater of: 1) 130 feet; or 2) the height of the tallest tower involved in that particular span.

21. Before commencing construction of Project facilities located within 100 feet of any existing natural gas or hazardous liquid pipeline, the Applicant shall:

    (a) Perform the appropriate grounding and cathodic protection studies to show that the Project's location within 100 feet of such pipeline results in no material adverse impacts to the natural gas or hazardous liquid pipeline or to public safety when both are in operation. As a compliance matter, a report of studies shall be provided to the Commission Staff. If material adverse impacts are noted in the studies, Applicant shall take appropriate steps to ensure that such material adverse impacts are eliminated. Applicant shall provide to the Commission Staff written documentation of the actions that will be taken and documentation showing no material adverse impact will occur; and,

    (b) Perform a technical study simulating an outage of the facility that may be caused by the collocation of the Project within 100 feet of the existing natural gas or hazardous liquid pipeline. This study should either: i) show that such outage does not result in customer outages; or ii) include operating plans to minimize any resulting customer outages. Applicant shall provide a copy of this study to Commission Staff.

22. Applicant shall pursue good faith efforts to reach a commercially reasonable agreement for interconnection at a new Arlington Valley 500kV switchyard.

Applicant shall file with the Commission Utilities Division no later than December 31, 2010, a report summarizing its efforts, the option(s) ultimately selected, and the reasons other option(s) were not selected.

DATED this 3 day of December, 2007.

THE ARIZONA POWER PLANT AND
TRANSMISSION LINE SITING COMMITTEE

Laurie A. Woodall

Laurie A. Woodall, Chairman

EXHIBIT 'A'

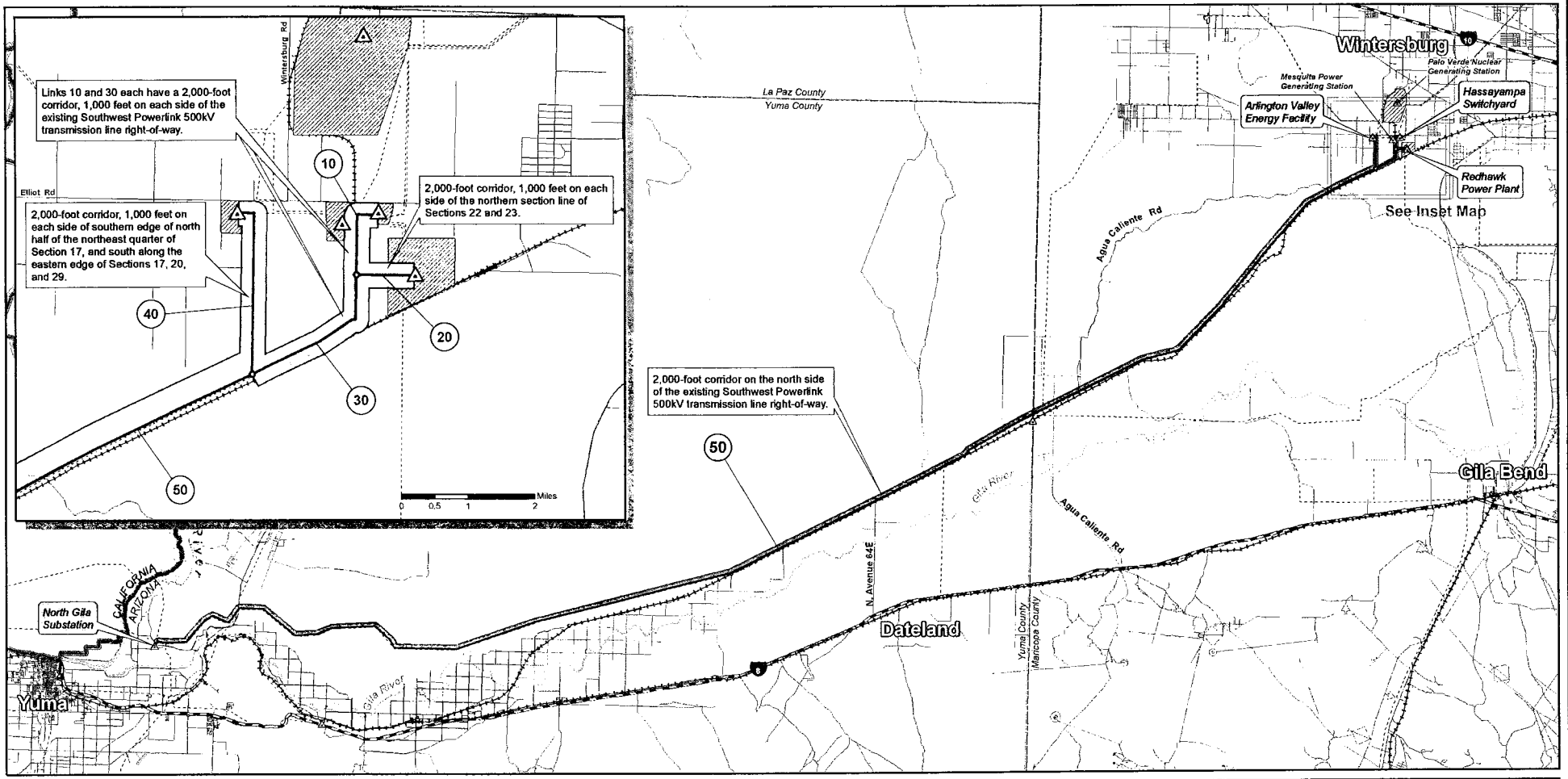

LEGEND

Project Features

- Proposed Project Corridor
- Proposed 500kV Transmission Line
- (50) Link Number
- Link Node

Reference Features

- Substation
- Plant/Switchyard
- Existing Transmission Line
- State Boundary
- County Boundary
- Interstate
- Major Road
- Road
- Railroad
- Gila River
- Colorado River

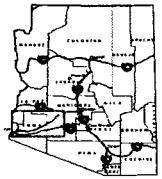

0 5 10 20 Miles

PALO VERDE TO NORTH GILA TRANSMISSION LINE PROJECT

October 2007

CEC Corridor Map

Sources: BLM, 2005; EPG, 2006

APS

epg

m:\projects\aps\pv-ngila\ea_cec\mxds\pv_ngila2_corr.mxd

EXHIBIT 'B'

Typical 500kV Single-Circuit Steel Lattice Structure

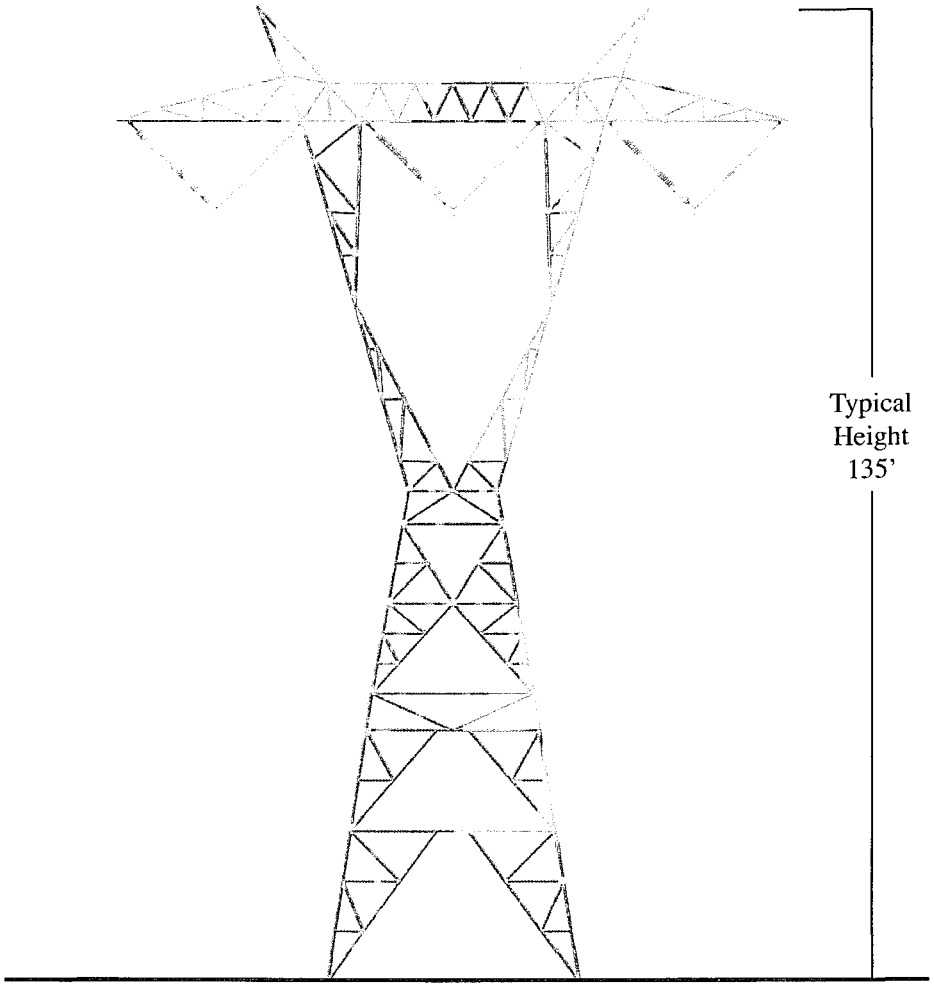

Palo Verde Hub to North Gila
Transmission Line Project

Exhibit G-1

Typical 500kV Single-Circuit Tubular Steel Pole Structure

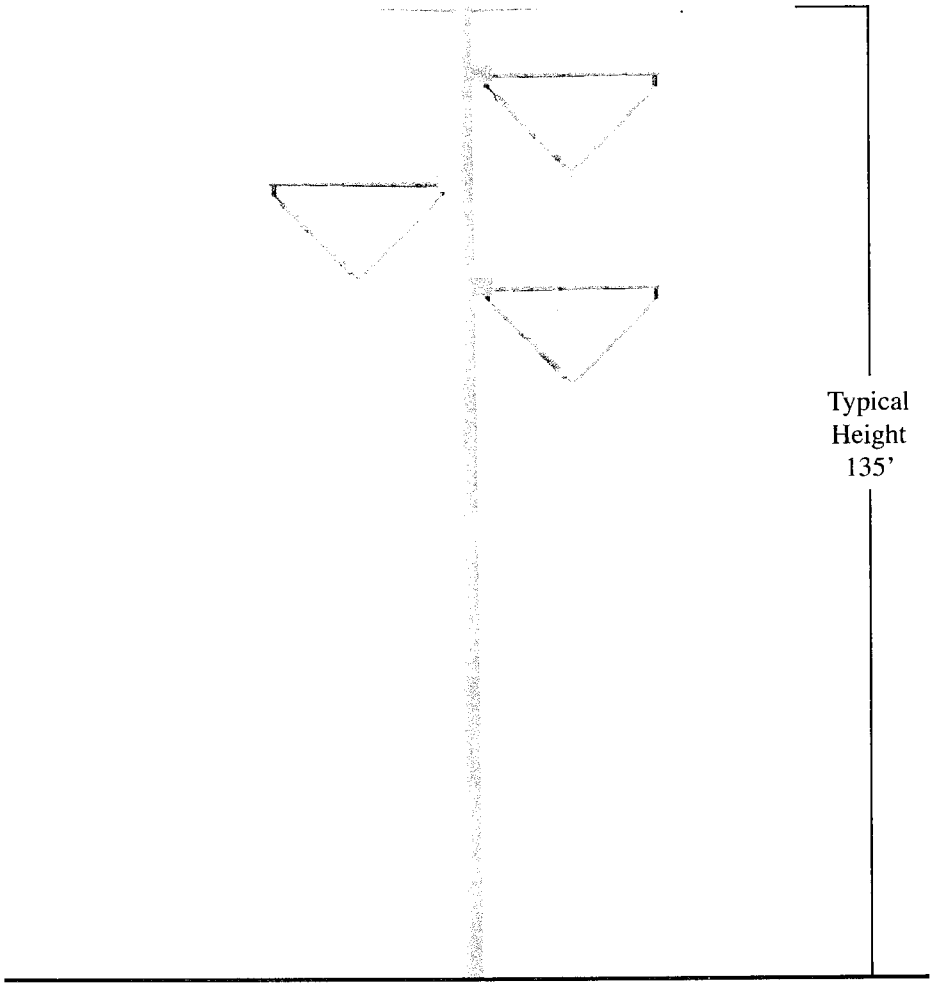

Palo Verde Hub to North Gila
Transmission Line Project

Exhibit G-2

Typical 500kV Tangent Vertical Configuration

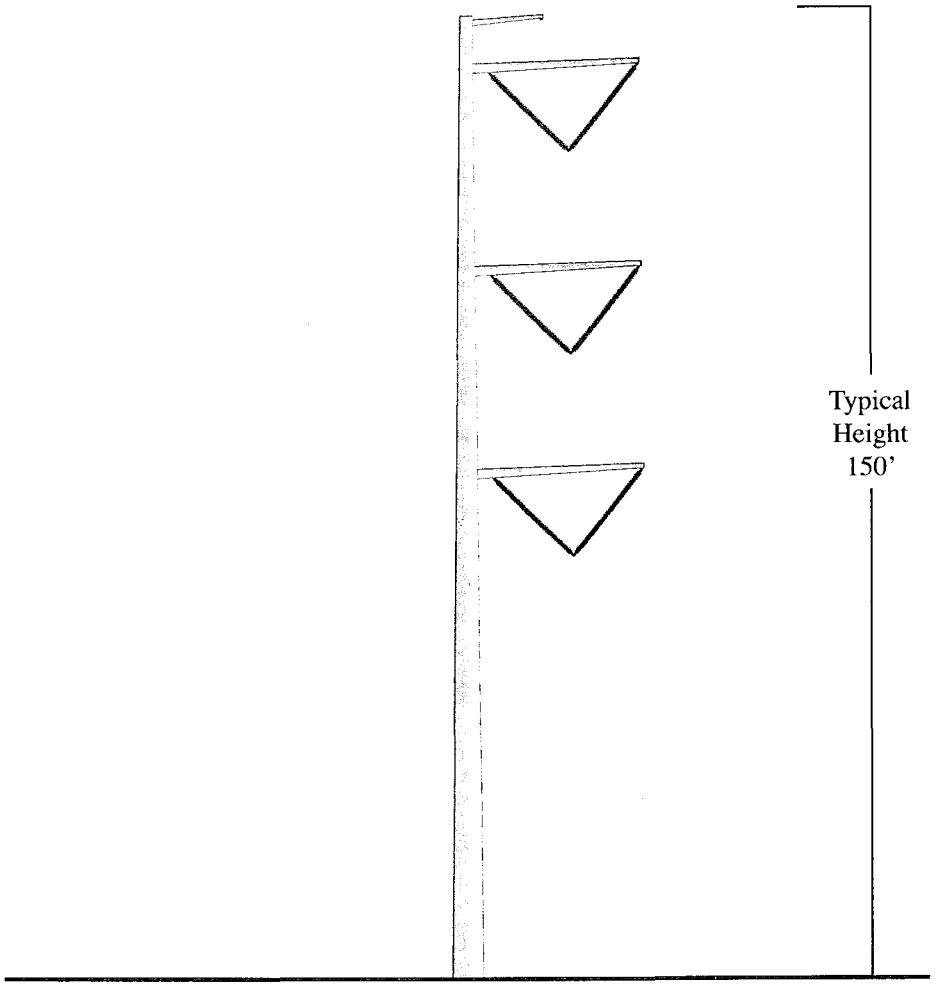

Palo Verde Hub to North Gila
Transmission Line Project

Exhibit G-3

Typical 500kV Single-Circuit Dead-End Steel Lattice Structure

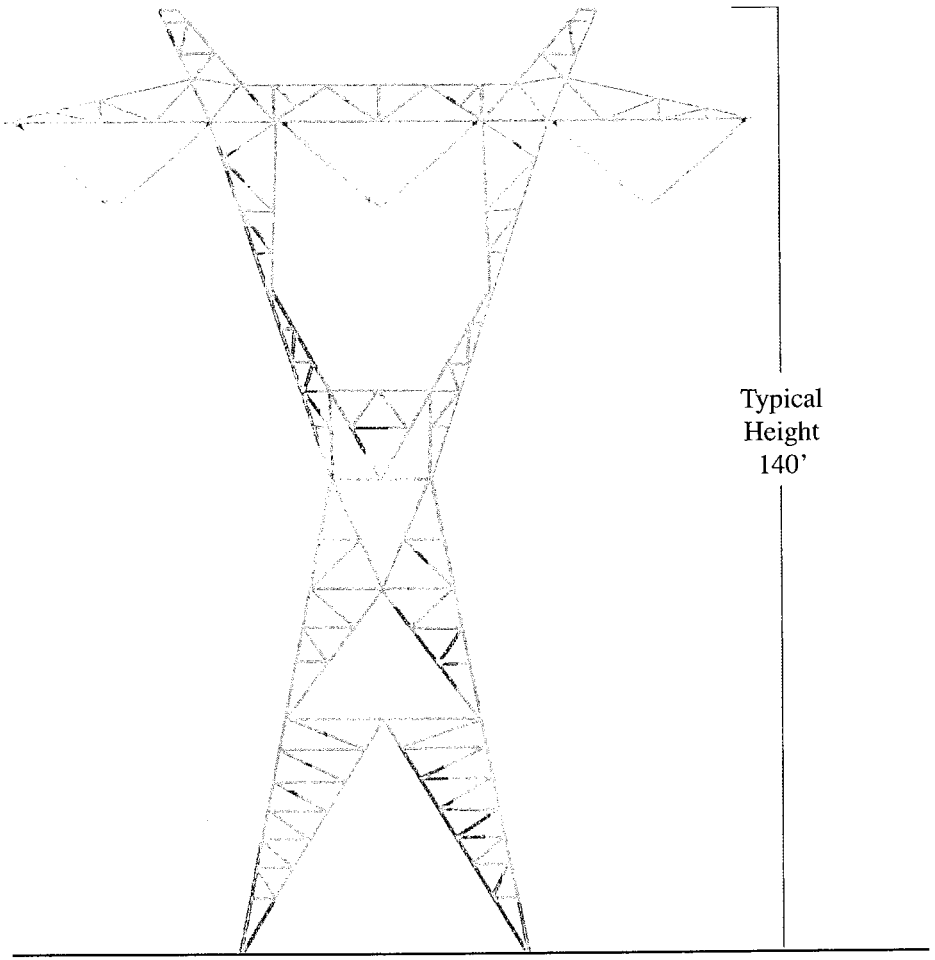

Palo Verde Hub to North Gila
Transmission Line Project

Exhibit G-4

Typical 500kV Single-Circuit Dead-End Steel Three-Pole Structure

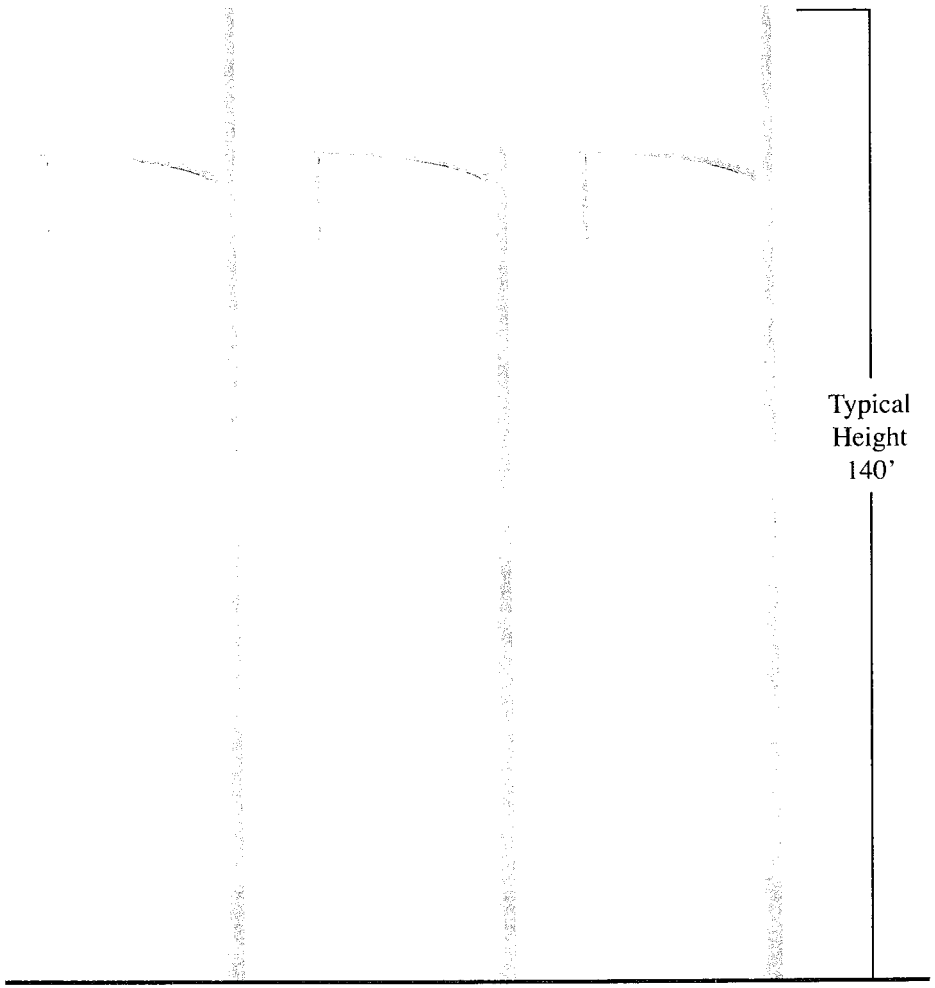

Palo Verde Hub to North Gila
Transmission Line Project

Exhibit G-5

Typical 500kV Lattice Tower Transposition Structure

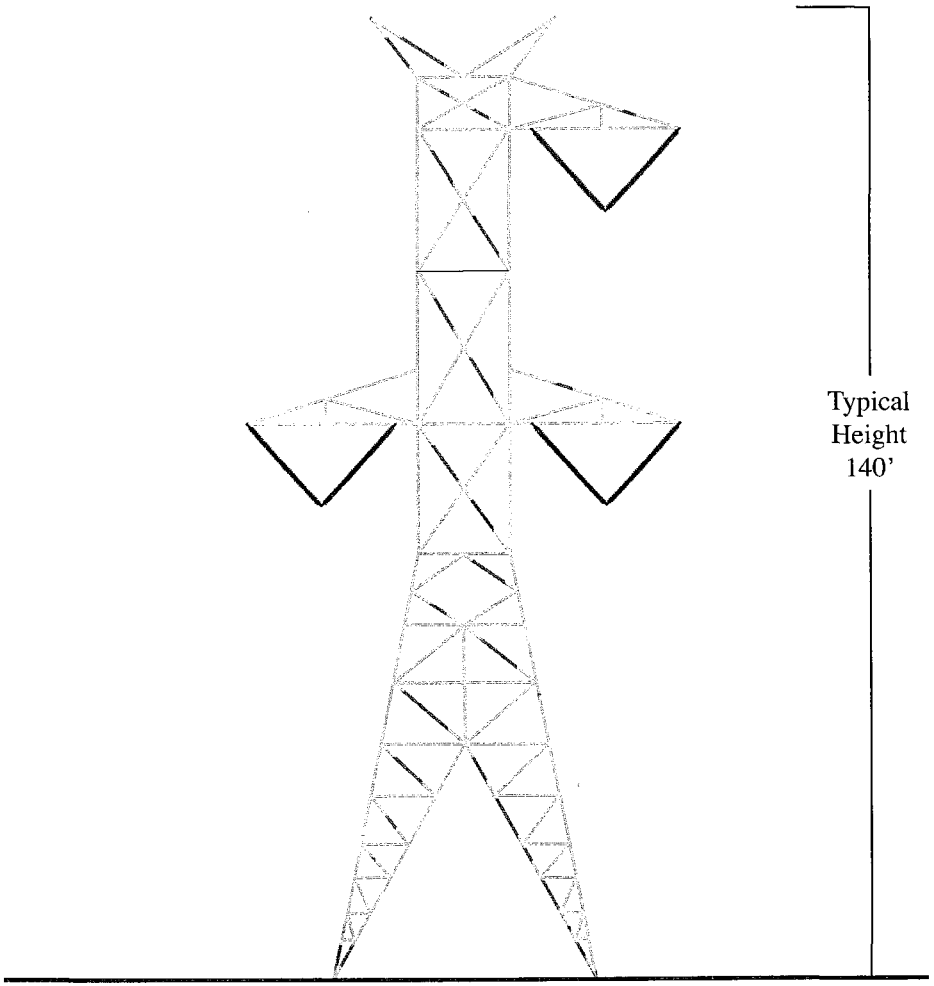

Palo Verde Hub to North Gila
Transmission Line Project

Exhibit G-6

Typical 500kV Steel-Pole Transposition Structure

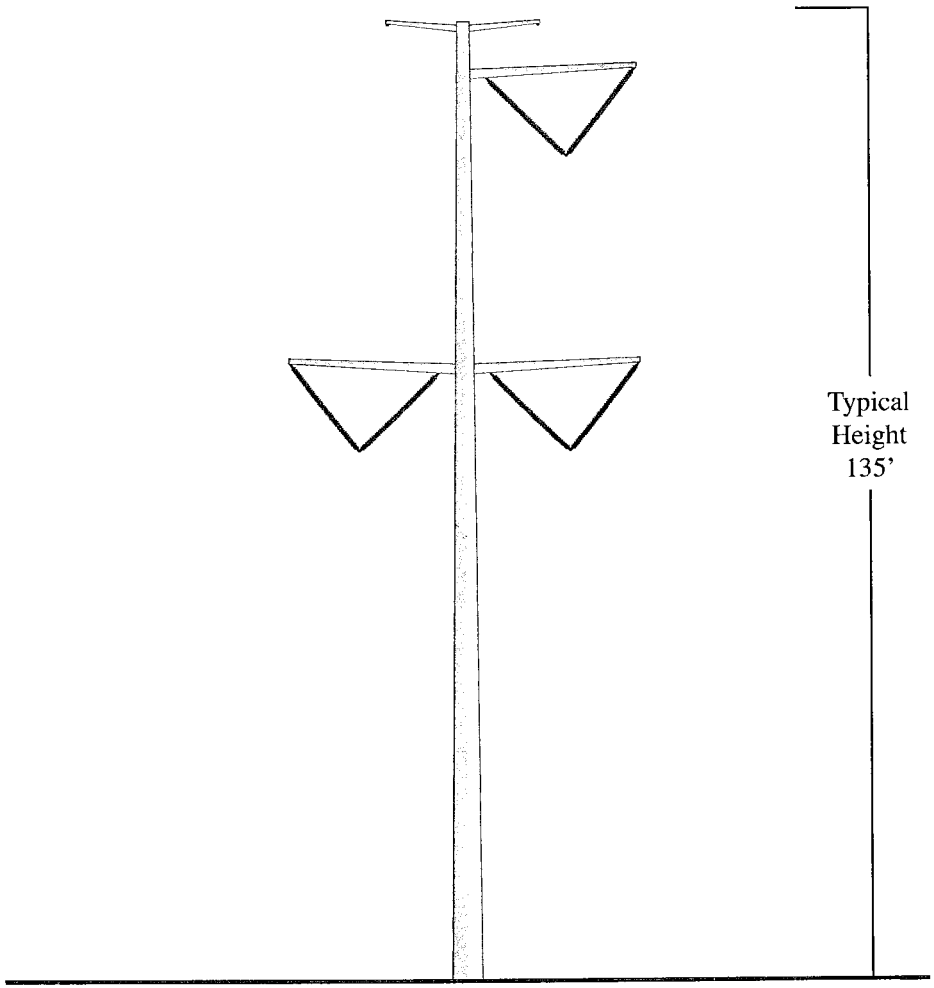

Palo Verde Hub to North Gila
Transmission Line Project

Exhibit G-7

Modified 500kV Single-Circuit Steel H-Frame Structure

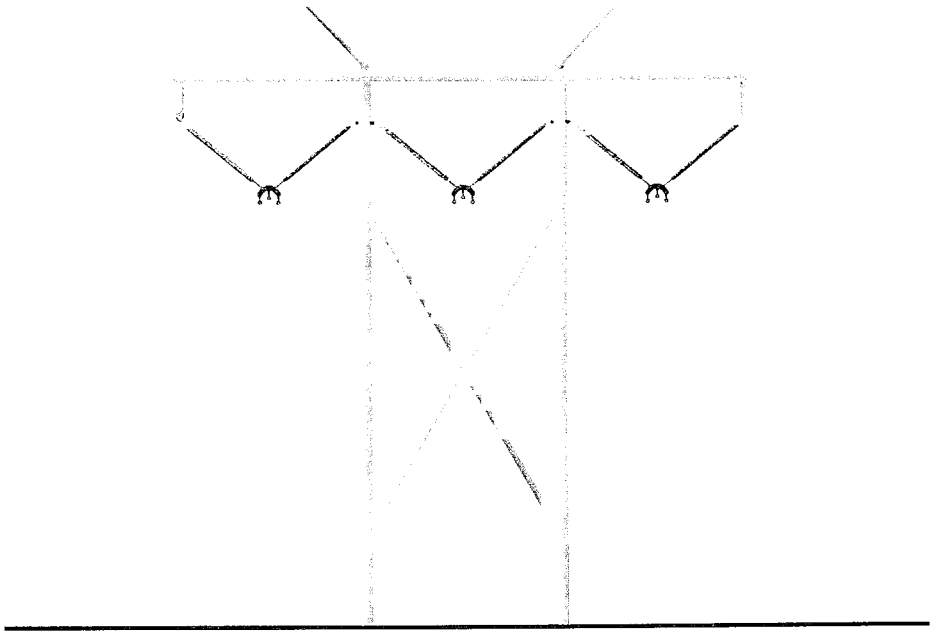

Palo Verde Hub to North Gila
Transmission Line Project

Exhibit G-8

EXHIBIT 'C'

FINDING OF NO SIGNIFICANT IMPACT

Name of Environmental Assessment: Palo Verde Hub to North Gila Substation
Environmental Assessment No.: AZ-220-2006-008
Case File No: AZA-33305
Bureau of Land Management Office: Phoenix District, Lower Sonoran Field Office

Finding of No Significant Impact: Upon review of the Environmental Assessment (EA) prepared for the above-named project and incorporated herein by reference, no significant long-term impacts on the human (socioeconomic) or natural environment would result. Short-term, temporary impacts on soils, water resources, biological resources, cultural resources, air quality, noise, and land use associated with construction activities of the proposed transmission line were identified which could be reduced by mitigation, and therefore are not considered significant. Long-term impacts on scenic quality were considered low to moderate, while the potential for long-term residual collision hazard for birds was considered low.

Recommendation: Grant a right-of-way to Arizona Public Service Company (APS) for construction, operation, and maintenance of a 500 kilovolt (kV) transmission line. The transmission line would originate from the Palo Verde Hub (PV Hub) at either an open transmission interconnection position in the Arlington Energy Facility, the Hassayampa Switchyard, or the Redhawk Power Plant. The transmission line would be constructed primarily with lattice tower structures paralleling the existing Southwest Power Link 500 kV Transmission line (SWPL) and connect into the North Gila Substation in Yuma, Arizona. The proposed right-of-way would be 200 feet wide, approximately 110 to 130 miles in length, of which approximately 55 miles would be located on Bureau of Land Management (BLM) administered lands. APS would implement the recommended Standard Operating Procedures and Mitigation Measures listed in Attachment A. The transmission line would be owned by APS and operated by APS and other project proponents.

Stipulations: APS is to implement the recommended Standard Operating Procedures and Mitigation Measures listed in Attachment A. Compliance with stipulations and mitigation measures will be monitored during project implementation. BLM issuance of the right-of-way grant is conditional upon APS obtaining all other federal, state, and local permits required to construct and operate the transmission line. APS is required to obtain the required Certificate of Environmental Compatibility from the Arizona Corporation Commission. The BLM has fulfilled requirements in accordance with the Section 106 process regarding cultural resource issues and requirements regarding biological resource issues.

Rationale: The EA for the Proposed Action has been prepared in accordance with National Environmental Policy Act (NEPA) requirements, including the public involvement procedures prescribed by 40 CFR §1506.6. The project design and mitigation measures proposed in the EA are integral to the Proposed Action and would reduce short-term and long-term environmental impacts to a level of insignificance. Issuance of right-of-way grant AZA-33305 to APS for the construction, operation, and maintenance of an electric transmission line is consistent with the Lower Gila South Resource Management Plan (BLM, 1988) which defines land uses along the San Diego Gas and Electric utility corridor and the Yuma District Resource Management Plan (BLM, 1986 and 1987) which defines uses along the interconnection utility corridor.

Recommendation of Finding: Project Manager — Date 11/6/07

I concur:

Approval of Finding: Field Manager — Date 11/06/07

DECISION RECORD

Serial No.: AZA-33305
EA No.: AZ-220-2006-008

Decision:

It is decided that Arizona Public Service Company (APS) be granted a right-of-way by the Bureau of Land Management (BLM) 200 feet wide, approximately 110 to 130 miles in length, approximately 1600 acres (across lands managed by the BLM, Bureau of Reclamation and the Yuma Proving Ground), including the rights to design, construct, operate, maintain and own a 500 kilovolt (kV) electric transmission line.

The transmission line would originate from the Palo Verde Hub (PV Hub) at either an open transmission interconnection position in the Arlington Energy Facility, the Hassayampa Switchyard or the Redhawk Power Plant. The transmission line would be constructed primarily with lattice tower structures paralleling the existing Southwest Power Link 500 kV Transmission line (SWPL) and connect into the North Gila Substation in Yuma, Arizona.

Rationale for Decision:

The Proposed Action is consistent with the current Lower Gila South Resource Management Plan (BLM, 1988) which defines land uses along the San Diego Gas and Electric utility corridor and the Yuma District Resource Management Plan (BLM, 1986 and 1987) which defines uses along the Interconnection utility corridor.

The Proposed Action will provide needed electrical power to the continuing development and growth occurring and anticipated in the Yuma region. The project would strengthen the entire Yuma area transmission system by providing an additional extra-high voltage (EHV) electrical transmission source to the region.

Upon implementation of the attached standard operating procedures and mitigation measures, short-term and long-term environmental and human (socioeconomic) impacts identified in the Environmental Assessment would not be significant. Compliance monitoring would be conducted to ensure that these mitigation measures are properly implemented and that sensitive resources are protected.

Standard Operating Procedures and Mitigation Measures:

See Attachment A.

Ken Heck
Field Manager

11/06/07
Date

APPENDIX A
STANDARD CONSTRUCTION AND OPERATING PROCEDURES AND MITIGATION MEASURES

1.	All construction vehicle movement outside of the right-of-way will be restricted to predesignated access, contractor acquired access, or public roads.
2.	The limits of construction activities will typically be predetermined, with activity restricted to and confined within those limits. No paint or permanent discoloring agents will be applied to rocks or vegetation to indicate survey or construction activity limits. The right-of-way boundary will be flagged in environmentally sensitive areas described in the specific plan of development to alert construction personnel that those areas should be avoided.
3.	In construction areas where recontouring is not required, vegetation will be left in place wherever possible to avoid excessive root damage and allow for resprouting.
4.	In construction areas (e.g., marshalling yards, structure sites, spur roads from existing access roads) where ground disturbance is significant or where recontouring is required, surface restoration will occur as required by the landowner or land-management agency. The method of restoration will typically consist of returning disturbed areas to their natural contour (to the extent practical), reseeding or revegetating with native plants (if required), installing cross drains for erosion control, placing water bars in the road, and filling ditches. Seed must be tested and certified to contain no noxious weeds in the mix by the State of Arizona Agricultural Department. Seed viability must also be tested at a certified laboratory approved by the authorized officer.
5.	Watering facilities (e.g., tanks, developed springs, water lines, wells, etc.) will be repaired or replaced to their predisturbed conditions as required by the landowner or land-management agency if they are damaged or destroyed by construction activities.
6.	Prior to construction, all construction personnel will be instructed on the protection of cultural, paleontological, and ecological resources. To assist in this effort, the construction contract will address (a) federal and state laws regarding antiquities, fossils, and plants and wildlife, including collection and removal; and (b) the importance of these resources and the purpose and necessity of protecting them.
7.	Impact avoidance and mitigation measures for cultural resources developed in consultation with the SHPO, BLM, BOR, YPG, ASLD, and the tribes will be implemented.
8.	The project sponsors will respond to complaints of line-generated radio or television interference by investigating the complaints and implementing appropriate mitigation measures. The transmission line will be patrolled on a regular basis so that damaged insulators or other line materials that could cause interference are repaired or replaced.
9.	The project sponsors will apply necessary mitigation to minimize problems of induced currents and voltages onto conductive objects sharing a right-of-way, to the mutual satisfaction of the parties involved.
10.	All construction and maintenance activities shall be conducted in a manner that will minimize disturbance to vegetation, drainage channels, and intermittent and perennial streambanks. In addition, all existing roads will be left in a condition equal to or better than their condition prior to the construction of the transmission line.
11.	All requirements of those entities having jurisdiction over air quality matters will be adhered to and any necessary permits for construction activities will be obtained. Open burning of construction debris (cleared trees, etc.) will not be allowed on BLM administered lands.
12.	Fences and gates, if damaged or destroyed by construction activities, will be repaired or replaced to their original predisturbed condition as required by the landowner or the land-management agency. Temporary gates will be installed only with the permission of the landowner or the land-management agency, and will be restored to their original predisturbed condition following construction.
13.	The proposed hardware and conductor will limit the audible noise, radio interference (RI), and television interference (TVI) due to corona. Tension will be maintained on all insulator assemblies to assure positive contact between insulators, thereby avoiding sparking. Caution will be exercised during construction to avoid scratching or nicking the conductor

	surface, which may provide points for corona to occur.
14.	During operation of the transmission line, the right-of-way will be maintained free of construction related non-biodegradable debris.
15.	Totally enclosed containment will be provided for all debris. All construction waste including debris, litter, garbage, other solid waste, petroleum products, and other potentially hazardous materials will be removed to a disposal facility authorized to accept such materials. A Spill Contingency Plan and Spill Prevention Control and Countermeasure (SPCC) Plan will be prepared. The SPCC Plan will address prevention and remediation of oil, hydraulic fluid, and petroleum fuel spills including spills that could enter navigable waters of the United States. Oils or chemicals will be hauled to an approved site for disposal. If a spill occurs on BLM land the respective BLM field office will be notified, and a copy of the manifest for disposal of the affected materials will be provided to the BLM.
16.	Structures will be constructed to conform to "Suggested Practices for Avian Protection on Power Lines" (Avian Power Line Interaction Committee 2006).
17.	Species protected by the Arizona Native Plant Law will be made available for salvage. A salvage plan approved by the BLM will be included in the specific plan of development.
18.	The alignment of any new access roads or overland routes will follow the designated area's landform contours where possible, providing that such alignment does not additionally impact resource values. This would minimize ground disturbance and reduce scarring.
19.	All new access roads not required for maintenance will be permanently closed using the most effective and least environmentally damaging methods appropriate to that area with concurrence of the landowner or land manager (e.g., stock piling and replacing topsoil, or rock replacement). This would limit access into the area. Fencing, signing, and other closure methods will be determined by the BLM and paid for by the contractor or APS.
20.	In designated areas, structures will be placed or rerouted so as to avoid sensitive features such as, but not limited to, riparian areas, watercourses, and cultural sites, or to allow conductors to clearly span the features, within limits of standard tower design.
21.	Transmission line structures will comply with Federal Aviation Administration Guidelines to minimize aircraft hazards (Federal Aviation 77).
22.	Special status species or other species of particular concern will continue to be considered during the construction phase of the Project, in accordance with management policies set forth by the BLM and other appropriate land management agencies. This will entail monitoring for plant and wildlife species of concern along the proposed transmission line and associated facilities (i.e., access roads and staging areas). In cases where such species are identified, appropriate action will be taken to avoid adverse impacts on the species and its habitat.
23.	The contractor or APS will submit to BLM a proposed road development plan for inclusion in the POD for the area in and around the Muggins Mountains. The goal of the plan is to limit new road construction to a minimum, restrict unauthorized use of maintenance roads, and discourage a travel route in the Muggins Mountains.
24.	As-built drawings, including locations of access roads, will be provided to the BLM as required by the right-of-way grant. The drawings will be provided in a format specified by the BLM.
25.	Any cultural and/or paleontological resource (historic or prehistoric site or object) discovered by the holder, or any person working on his behalf, on public or federal land shall be immediately reported to the BLM authorized officer. The holder shall suspend all operations in the immediate area of such discovery until written authorization to proceed is issued by the authorized officer to determine appropriate actions to prevent the loss of significant cultural or scientific values.

Other Mitigating Measures

1. All applicable regulations in accordance with 43 CFR 2800.

2. The holder shall construct, operate, and maintain the facilities, improvements, and structures within this right-of-way in strict conformity with the Plan of Development (POD) and made part of the grant. Any relocation, additional construction, or use that is not in accord with the approved POD, shall not be initiated without the prior written approval of the authorized officer. A copy of the complete right-of-way grant, including all stipulations and approved POD, shall be made available on the right-of-way area during construction, operation, and termination to the authorized officer. Noncompliance with the above will be grounds for an immediate temporary suspension of activities if it constitutes a threat to public health and safety or the environment.

3. Any cultural and/or paleontological resources (historic or prehistoric site or object) discovered by the holder or any person working on the holders behalf, on public or federal land shall be immediately reported to the authorized officer. The holder shall suspend all operations in the immediate area of such discovery until written authorization to proceed is issued by the authorized officer. An evaluation of the discovery will be made the authorized officer to determine the appropriate actions to prevent the loss of significant cultural or scientific values. The holder will be responsible for the cost of the evaluation and any decision as to the proper mitigation measures will be made by the authorized officer after consulting with the holder.

4. Construction holes left open over night shall be covered. Covers shall be secured in place and shall be strong enough to prevent livestock or wildlife from falling through and into a hole.

5. Within 30 days of completion, the holder will submit to the authorized officer, as-built drawings and a certification of construction verifying that the facility has been constructed (and tested) in accordance with the design, plans, specifications, and applicable laws and regulations.

6. During construction, the holder shall apply water for the purpose of dust control.

7. The holder shall trim trees in preference to cutting trees and shall cut trees in preference to bulldozing them as directed by the authorized officer.

8. Holder shall remove only the minimum amount of vegetation necessary for the construction of structures and facilities. Topsoil will be conserved during excavation and reused as cover on disturbed areas to facilitate re-growth of vegetation.

9. The holder shall maintain the right-of-way in a safe usable condition, as directed by the authorized officer.

10. The holder will be responsible for the total reclamation of the right-of way shall it ever be relinquished or terminated. This reclamation will include the scarification of the road surface and the reseeding of the entire disturbed area with a native seed mixture that will be approved by the Authorized Officer prior to the reclamation work.

11. The holder of this right-of-way grant or the holder's successor in interest shall comply with Title VI of the Civil Rights Act of 1964 (42 U.S.C. 2000d et seq.) and the regulations of the Secretary of the Interior issued pursuant thereto.

12. All design, material, and construction, operation, maintenance, and termination practices shall be in accordance with safe and proven engineering practices.

13. Construction sites shall be maintained in a sanitary condition at all times; waste materials at those sites shall be disposed of promptly at an appropriate waste disposal site. "Waste" means all discarded matter including, but not limited to, human waste, trash, garbage, refuse, oil drums, petroleum products, ashes, and equipment.

14. The holder(s) shall comply with all applicable Federal laws and regulations existing or hereafter enacted or promulgated. In any event, the holder(s) shall comply with the Toxic Substances Control Act of 1976, as amended (15 U.S.C. 2601, et seq.) with regard to any toxic substances that are used, generated by or stored on the right-of-way or on facilities authorized under this right-of-way grant. (See 40 CFR, Part 702-799 and especially, provisions on polychlorinated biphenyls, 40 CFR 761.1-761.193.) Additionally, any release of toxic substances (leaks, spills, etc.) in excess of the reportable quantity established by 40 CFR, Part 117 shall be reported as required by the Comprehensive Environmental Response, Compensation and Liability Act of 1980, Section 102b. A copy of any report required or requested by any Federal agency or State government as a result of a reportable release or spill of any toxic substances shall be furnished to the authorized officer concurrent with the filing of the reports to the involved Federal agency or State government.

15. The holder agrees to indemnify the United States against any liability arising from the release of any hazardous substance or hazardous waste (as these terms are defined in the Comprehensive Environmental Response, Compensation and Liability Act of 1980, 42 U.S.C. 9601, et seq. or the Resource Conservation and Recovery Act of 1976, 42 U.S.C. 6901 et seq.) on the right-of-way (unless the release or threatened release is wholly unrelated to the right-of-way holder's activity on the right-of-way. This agreement applies without regard to whether a release is caused by the holder, its agent, or unrelated third parties.

16. Prior to termination of the right-of-way, the holder shall contact the authorized officer to arrange a pre-termination conference. This conference will be held to review the termination provisions of the grant.

17. Archeological sites that are eligible for National Register shall be spanned and avoided during construction and maintenance activities. If an eligible site cannot be spanned, impact avoidance and mitigation measures developed in consultation with the State Historic Preservation Office and other interested parties shall be implemented during post-Environmental Assessment phases of project implementation.

18. Prior to construction, a training program shall be instituted that would stress the importance of avoiding unintentional and intentional damage to cultural, paleontological, and ecological resources.

Desert Tortoise Mitigation Measures

19. A desert tortoise protection education program shall be presented to all employees, inspectors, supervisors, contractors, and subcontractors who carry out proposed activities at the project site. The education program shall include discussions of the following:
    - legal and sensitive status of the tortoise
    - brief discussion of tortoise life history and ecology
    - mitigation measures designed to reduce adverse effects to tortoises
    - protocols to follow if a tortoise is encountered, including appropriate contact points

20. A desert tortoise monitor (qualified desert tortoise biologist) will be required when constructing within Category 1 tortoise habitat. The biologist shall watch for tortoises wandering into construction areas, check under vehicles, check at least three times per day any excavations that might trap tortoises, and conduct other activities necessary to ensure that death and injury of tortoises are minimized.

21. Protocols for dealing with any tortoises found in project areas shall be in accordance with Arizona Game and Fish Department's Guidelines for Handling Sonoran Desert Tortoises Encountered on Development Projects, revised August 7, 1996.

22. Vehicle use shall be limited to existing or designated routes to the extent possible. Areas of new construction shall be flagged or marked on the ground prior to construction. All construction workers shall strictly limit their activities and vehicles to areas that have been marked. Construction personnel shall be trained to recognize markers and understand the equipment movement restrictions involved.

23. Construction sites shall be maintained in a sanitary condition at all times. The project proponent shall be responsible for controlling and limiting litter, trash, and garbage by placing refuse in predator-proof, sealable receptacles. Trash and debris shall be removed when construction is complete

24. All features that can entrap tortoise (i.e., trenches, pits, and other features) in the project area shall be checked twice daily (morning and afternoon) for trapped desert tortoise.

25. During and after completion of the project, trenches, pits, and other features in which tortoises could be entrapped or entangled, shall be filled in, covered, or otherwise modified so they are no longer a hazard to desert tortoise.

26. All dogs in the project area shall be on a leash.

GUIDELINES FOR HANDLING SONORAN DESERT TORTOISES ENCOUNTERED ON DEVELOPMENT PROJECTS

Arizona Game and Fish Department
Revised January 17, 1997

The Arizona Game and Fish Department (Department) has developed the following guidelines to reduce potential impacts to desert tortoises, and to promote the continued existence of tortoises throughout the state. These guidelines apply to short-term and/or small-scale projects, depending on the number of affected tortoises and specific type of project.

Desert tortoises of the Sonoran population are those occurring south and east of the Colorado River. Tortoises encountered in the open should be moved out of harm's way to adjacent appropriate habitat. If an occupied burrow is determined to be in jeopardy of destruction, the tortoise should be relocated to the nearest appropriate alternate burrow or other appropriate shelter, as determined by a qualified biologist. Tortoises should be moved less than 48 hours in advance of the habitat disturbance so they do not return to the area in the interim. Tortoises should be moved quickly, kept in an upright position at all times and placed in the shade. Separate disposable gloves should be worn for each tortoise handled to avoid potential transfer of disease between tortoises. Tortoises must not be moved if the ambient air temperature exceeds 105 degrees Fahrenheit unless an alternate burrow is available or the tortoise is in imminent danger.

A tortoise may be moved up to two miles, but no further than necessary from its original location. If a release site, or alternate burrow, is unavailable within this distance, and ambient air temperature exceeds 105 degrees Fahrenheit, the Department should be contacted to place the tortoise into a Department-regulated desert tortoise adoption program. Tortoises salvaged from projects which result in substantial permanent habitat loss (e.g. housing and highway projects), or those requiring removal during long-term (longer than one week) construction projects, will also be placed in desert tortoise adoption programs. Mangers of projects likely to affect desert tortoises should obtain a scientific collecting permit from the Department to facilitate temporary possession of tortoises. Likewise, if large numbers of tortoises (>5) are expected to be displaced by a project, the project manager should contact the Department for guidance and/or assistance.

Please keep in mind the following points:

- These guidelines do not apply to the Mohave population of desert tortoises (north and west of the Colorado River). Mohave desert tortoises are specifically protected under the Endangered Species Act, as administered by the U.S. Fish and Wildlife Service.
- These guidelines are subject to revision at the discretion of the Department. We recommend that the Department be contacted during the planning stages of any project that may affect desert tortoises.
- Take, possession, or harassment of wild desert tortoises is prohibited by state law. Unless specifically authorized by the Department, or as noted above, project personnel should avoid disturbing any tortoise.

RAC:NLO:rc