ORIGINAL

0000075903

ROSHKA DEWULF & PATTEN

ROSHKA DEWULF & PATTEN, PLC
ATTORNEYS AT LAW
ONE ARIZONA CENTER
400 EAST VAN BUREN STREET
SUITE 800
PHOENIX, ARIZONA 85004
TELEPHONE NO 602-256-6100
FACSIMILE 602-256-6800

RECEIVED

2007 AUG 14 P 4: 38

AZ CORP COMMISSION
DOCKET CONTROL

28DR

August 14, 2007

Ms. Blessing Chukwu
Executive Consultant III
Utilities Division
Arizona Corporation Commission
1200 West Washington
Phoenix, Arizona 85007

Re: Palo Verde Utilities Company, LLC and Santa Cruz Water Company, LLCs' Response to Staff's Insufficiency Letter dated June 15, 2007
Docket No. SW-03575A-07-0300 and W-03576A-07-0300

Dear Ms. Chukwu:

Enclosed please find the responses of Palo Verde Utilities Company, LLC and Santa Cruz Water Company, LLC, to Staff's Insufficiency Letter dated June 15, 2007.

Sincerely,

Timothy J. Sabo

TJS:da
cc: Docket Control (15 copies + the original)
Dorothy Hains
Enclosures

Arizona Corporation Commission
DOCKETED
AUG 14 2007

DOCKETED BY

PALO VERDE UTILITIES COMPANY, L.L.C.
AND SANTA CRUZ WATER COMPANY, L.L.C.
RESPONSES TO INSUFFICENCY LETTER DATED JUNE 15, 2007
Docket No. SW-03575A07-0300 and W-03576A-07-0300

1. Please provide a copy of the water usage data for the last 12 months for Santa Cruz Water system.

RESPONSE: Please see attached.

RESPONDENT: Graham Symmonds, Senior Vice President and Chief Technical Officer

2. Please provide a set of design plans for the proposed water facilities. The plan should include the proposed water source, distribution facilities and show the site map of the proposed water treatment plant. If final design plans are not available, please provide preliminary plans.

RESPONSE: Attached please find a Master Water Report, dated November 20, 2006, for Legends. This report provides design criteria, water demands, and a general system description. Also included are exhibits that show the SCWC Legend extension CC&N area, the location and sizes of water distribution mains within Legends, the location of the proposed raw and potable water mains (EXH-01), and a revised site plan of our proposed water treatment and distribution center, co-located at the site of the future PVUC Campus 7 Water Reclamation Facility. The facility will be located at the SE corner of Russell Road and Clayton Road. To date, engineering plans have not been completed for the proposed water treatment and distribution center.

This Master Water Report, which is for the entire Legends development, and attached exhibits are consistent with the March 1, 2007 service memorandum included in the original docket, exhibit 7, which represents those elements associated with the proposed CC&N extension area.

RESPONDENT: Graham Symmonds, Senior Vice President and Chief Technical Officer

3. Please provide a drinking water design report which clarifies how water will be provided to the proposed CC&N extension area.

The report—should identify existing and future sources, the capacities of existing sources, the estimated capacities of future sources and any existing demand on the present water sources.

The report should include the estimated water demand from a typical dwelling unit, the estimated demand from the proposed CC&N extension area.

The report should identify the location of future and existing transmission mains and include the timing or construction phasing of facilities.

The report should describe water quality and address any water quality problems with the existing and future sources of water (for example, will extra treatment costs arise in order to meet existing or future maximum containment levels for arsenic nitrates or fluorides in the drinking water?).

RESPONSE: See Master Water Report provided per question 2. Since the original filing, water quality data has been obtained from investigation at four Legends-area wells. Attached please find a table, "Legends Ranch Development Water Quality Investigation" that presents this data. Arsenic concentrations exceed the drinking water standards in wells 1,2 and 3, and nitrates exceed in wells 2, 3 and 4. Legends 1 Well, with a flow of 1,730 gpm, has sufficient capacity for the 5229 DUs in the extension area at buildout, and will be the most likely well developed into a production well. During preliminary design, a determination with respect to the rehabilitation options will be performed. These options include: screening or sealing to isolate aquifer layers; construction of treatment facilities; or the development of blending plans in conjunction with other wells. Arsenic treatment options include adsorption technologies or coagulation/filtration configurations. Treatment, whether absorption or coagulation/filtration, is estimated at an additional $1.00/gallon. The cost tables in the original docket exhibit 7 have been updated, as well as the costs in the service memorandum, and are attached.

RESPONDENT: Graham Symmonds, Senior Vice President and Chief Technical Officer

4. Please provide an estimate of the water facilities costs necessary to serve the proposed CC&N extension area. The cost should include a description of the major components with the cost of the component (i.e., wells, number and size of storage tanks, etc.). The method of financing for the major components should be described in as much detail as possible.

RESPONSE: Please see the revised cost tables attached. The water system facilities shown will be funded by equity from the parent.

RESPONDENT: Graham Symmonds, Senior Vice President and Chief Technical Officer

5. Please provide a copy of the wastewater flow records for the last 12 months for Palo Verde including peak flow records.

RESPONSE: Please see the attached wastewater flow records.

RESPONDENT: Graham Symmonds, Senior Vice President and Chief Technical Officer

6. Please provide a set of design plans for the proposed wastewater facilities. The plan should include the proposed wastewater treatment plant, sewer collection facilities and show the site map of the proposed wastewater treatment plant, lift stations, etc. If final design plans are not available, please provide preliminary plans.

RESPONSE: Attached please find a Master Wastewater Report, dated November 20, 2006, for Legends. This report provides design criteria, wastewater flow generation, and a general system description. Also included are exhibits that show the PVUC Legend extension CC&N area, the location of the proposed gravity sewers and force main (EXH-01), the location and sizes of wastewater collection system within Legends, and a revised site plan of the future PVUC Campus 7 Water Reclamation Facility. The facility will be located at the SE corner of Russell Road and Clayton Road.

Flows from the extension area will be treated at PVUC Campus 1 WRF until such time capacity demands exceed the availability at Campus 1 thus requiring the construction of Campus 7 WRF. A 2.0 MGD lift station will be constructed in Year 1 to transport wastewater to the Campus 1 WRF With wastewater flows averaging 187 gpd/du, this 2 MGD lift station can service 10,695 du, sufficient for Years 1 through 5.

This Master Wastewater Report, which is for the entire Legends development, and attached exhibits are consistent with the March 1, 2007 service memorandum included in the original docket, exhibit 7, which represents those elements associated with the proposed CC&N extension area. The cost table has been updated to show the construction of the lift station in year 1.

RESPONDENT: Graham Symmonds, Senior Vice President and Chief Technical Officer

7. Please provide a copy of the approved Central Arizona Association of Government ("CAAG") Section 208 Plan which includes the proposed service extension area.

RESPONSE: A copy of the approved CAAG 208 Plan was submitted to the Engineering Division on July 23, 2007 per a request relating to Docket 06-0199. Attached please find Exhibit 3 from the approved CAAG 208 Plan (June 28, 2006) and the ADEQ Certification documents, which illustrate that the extension area is located within an approved 208 amendment.

RESPONDENT: Graham Symmonds, Senior Vice President and Chief Technical Officer

8. If the information is not contained in the §208 plans, please submit a master wastewater design report which clarifies how wastewater service will be provided to the proposed CC&N area.

   The report should identify the location of existing and future wastewater treatment plants and major wastewater interceptors. It should also provide the capacities of existing and future wastewater treatment plants, any existing service base in the proposed CC&N extension area, service connections at build out in the proposed CC&N extension area, estimated wastewater flow from a typical dwelling unit.

   The report should also include the estimated wastewater total flows or contributions from future build out within the proposed CC&N extension area, the timing or construction phasing of facilities and methods of effluent disposal.

   Please include any other information which will allow the Commission to analyze and conclude that the company has sufficient wastewater treatment capacity, or can develop enough treatment capacity to service the existing and future demands from the proposed CC&N.

RESPONSE: Please see response to question 6.

RESPONDENT: Graham Symmonds, Senior Vice President and Chief Technical Officer

9. Please provide an estimate of the wastewater facilities costs necessary to serve the proposed CC&N extension area. The cost should include a description of the major components with the cost of each component (i.e., lift stations, treatment facilities, lineal feet off-site sewage interceptors and collection mains, lineal feet of on-site collection mains, etc.). The method of financing for the major components should be described in as much detail as possible.

RESPONSE: See attached. Facilities are funded by equity from the parent.

RESPONDENT: Graham Symmonds, Senior Vice President and Chief Technical Officer

10. Please provide a copy of the Municipal and/or County franchise agreement that includes the proposed extension area. If the franchise agreement(s) has not been issued, please inform Staff of the status of the application for the franchise agreement.

RESPONSE: The franchise agreements for both SCWC and PVUC to cover the extension area are processing through Pinal County Special Services Department. The franchises are expected to be approved at the Board of Supervisors' September 19, 2007 meeting.

RESPONDENT: Graham Symmonds, Senior Vice President and Chief Technical Officer

11. Please provide a copy of the proposed construction schedule for the requested area.

RESPONSE:

1.	Lift Station Design Complete	60 days from ACC approval
2.	ATC for Lift Station	240 days from ACC approval
3.	AOC Construction of Lift Station	365 days from ACC approval
4.	Force main and Backbone sewer design Complete	365 days from ACC approval
5.	ATC for Force Main and Backbone Complete	485 days from ACC approval
6.	AOC Force main and Backbone sewer Construction	635 days from ACC approval
7.	Well, Water Distribution Canter, System design Complete	60 days from ACC approval
8.	ATC for Well, Water Distribution Canter, System	150 days from ACC approval
9.	AOC of Well, Water Distribution Canter, System	395 days from ACC approval

RESPONDENT: Graham Symmonds, Senior Vice President and Chief Technical Officer

12. Will the requested area in Section 30 be served by a stand alone wastewater treatment plant? Please explain.

RESPONSE: There was an error in the legal description which is being corrected and docketed. Section 30 is already in the CC&N and is not part of this extension request.

RESPONDENT: Graham Symmonds, Senior Vice President and Chief Technical Officer

13. Will any artificial lakes, golf courses, ornamental structures, open spaces, and any other aesthetic water features be built in the requested area? If so, does Global Utilities plan to use groundwater at the beginning of the project for artificial lakes, golf courses, ornamental structures, open spaces, and any other aesthetic water features, and if so, for how long? Please explain in detail.

RESPONSE: As can be seen from the developer's land use plan, dated 20 November 06, attached, open space and schools fall within the extension area. In accordance with existing PVUC policy, developments served by PVUC must agree to employ recycled water for irrigation purposes, receive return flows of recycled water equal to the wastewater generated form the development, and agree to the construction of recycled water retention structures (RWRS). The RWRS provide diurnal and wet-weather storage for recycled water, and are sized to store reclaimed water for the entire development.

If necessary, groundwater may be delivered to the RWRS in accordance with ADWR policy and the Interim Use Permit. Interim Use Permits (IUPs) are typically obtained by developers in accordance with established ADWR regulations to allow for a temporary use of groundwater as a development awaits the production of recycled water. IUPs are valid for three years.

RESPONDENT: Graham Symmonds, Senior Vice President and Chief Technical Officer

14. At what point in time does Global Utilities intend to utilize effluent for artificial lakes, golf courses, ornamental structures, open spaces, and any other aesthetic water features? Please explain in detail. Please be sure to include the number of houses that would have to be built in order to generate enough effluent for such uses.

RESPONSE: PVUC maintains Land Use specifications which specify the landscape configuration for development in terms of turf, xeriscape, and recycled water retention structure surface area. These specifications were developed on the basis of self-sustainability – meaning that on an annual average flow basis, a particular development meets all its irrigation requirement by using recycled water. A copy of this specification is included and details the general approach that will be applied to this extension area.

RESPONDENT: Graham Symmonds, Senior Vice President and Chief Technical Officer

GENERAL LEGAL DESCRIPTION
CC&N EXPANSION AREA FOR
PALO VERDE UTILITIES COMPANY
PINAL COUNTY, ARIZONA

TOWNSHIP 6 SOUTH, RANGE 4 EAST, G&SRB&M, PINAL COUNTY, ARIZONA

PARCEL 1

THE EAST HALF OF SECTION 1, TOWNSHIP 6 SOUTH, RANGE 4 EAST, OF THE GILA AND SALT RIVER BASE AND MERIDIAN, PINAL COUNTY, ARIZONA,

EXCEPT THE SOUTH 115.5 FEET OF THE NORTHEAST QUARTER OF SECTION 1, AND, EXCEPT THE NORTH 140 FEET OF THE SOUTHEAST QUARTER OF SECTION 1.

PARCEL 2

THE EAST HALF AND THE SOUTHWEST QUARTER OF SECTION 12, TOWNSHIP 6 SOUTH, RANGE 4 EAST, OF THE GILA AND SALT RIVER BASE AND MERIDIAN, PINAL COUNTY, ARIZONA.

TOWNSHIP 6 SOUTH, RANGE 5 EAST, G&SRB&M, PINAL COUNTY, ARIZONA

PARCEL 1

THE EAST HALF OF SECTION 5, TOWNSHIP 6 SOUTH RANGE 5 EAST, OF THE GILA AND SALT RIVER BASE AND MERIDIAN, PINAL COUNTY, ARIZONA,

EXCEPT THAT PART LYING NORTH OF THE SOUTHERN PACIFIC RAILROAD.

PARCEL 2

THE EAST HALF OF THE SOUTHWEST QUARTER OF SECTION 5, TOWNSHIP 6 SOUTH, RANGE 5 EAST OF THE GILA AND SALT RIVER BASE AND MERIDIAN, PINAL COUNTY, ARIZONA,

EXCEPT THE NORTH 200 FEET THEREOF.

PARCEL 3

THE WEST HALF OF THE SOUTHWEST QUARTER OF SECTION 5, TOWNSHIP 6 SOUTH, RANGE 5 EAST, OF THE GILA AND SALT RIVER BASE AND MERIDIAN, PINAL COUNTY, ARIZONA;

EXCEPT THAT PORTION DESCRIBED AS FOLLOWS:

BEGINNING AT THE WEST QUARTER CORNER OF SAID SECTION 5;

THENCE SOUTH 89 DEGREES 54 MINUTES EAST, ALONG THE NORTH BOUNDARY OF SAID WEST HALF OF THE SOUTHWEST QUARTER OF SECTION 5, A DISTANCE OF 1302.9 FEET;
THENCE SOUTH 1 DEGREES 30 MINUTES 30 SECONDS WEST, ALONG THE EAST BOUNDARY OF SAID WEST HALF OF THE SOUTHWEST QUARTER OF SECTION 5, A DISTANCE OF 287.8 FEET;
THENCE SOUTH 89 DEGREES 59 MINUTES WEST, A DISTANCE OF 1305.8 FEET;
THENCE NORTH 2 DEGREES 03 MINUTES 30 SECONDS EAST, ALONG THE WEST BOUNDARY OF SAID SECTION 5, A DISTANCE OF 290.3 FEET TO THE POINT OF BEGINNING.

PARCEL 4

THE SOUTHEAST QUARTER OF SECTION 6, TOWNSHIP 6 SOUTH, RANGE 5 EAST OF THE GILA AND SALT RIVER BASE AND MERIDIAN, PINAL COUNTY, ARIZONA,

EXCEPT THE NORTH 300 FEET THEREOF.

PARCEL 5

THE SOUTHWEST QUARTER OF SECTION 6, TOWNSHIP 6 SOUTH, RANGE 5 EAST, OF THE GILA AND SALT RIVER BASE AND MERIDIAN, PINAL COUNTY, ARIZONA,

EXCEPT THE NORTH 300 FEET OF THE EAST HALF OF THE SOUTHWEST QUARTER, AND EXCEPT THE NORTH 140 FEET OF THE WEST HALF OF THE SOUTHWEST QUARTER OF SAID SECTION 6.

PARCEL 6

ALL OF SECTION 7, TOWNSHIP 6 SOUTH, RANGE 5 EAST OF THE GILA AND SALT RIVER BASE AND MERIDIAN, PINAL COUNTY, ARIZONA.

PARCEL 7

ALL OF SECTION 8, TOWNSHIP 6 SOUTH, RANGE 5 EAST OF THE GILA AND SALT RIVER BASE AND MERIDIAN, PINAL COUNTY, ARIZONA.

CONTAINING APPROXIMATELY 3,327 ACRES, MORE OR LESS. THIS AREA IS NOT BASED ON A FIELD SURVEY, BUT BASED ON DATA FURNISHED BY THE CLIENT.

REGISTERED LAND SURVEYOR
CERTIFICATE NO.
21071
MARY F.
KENNEDY
Date Signed 8/14/07
ARIZONA, U.S.A.

PVUC Extension Request
07-0300

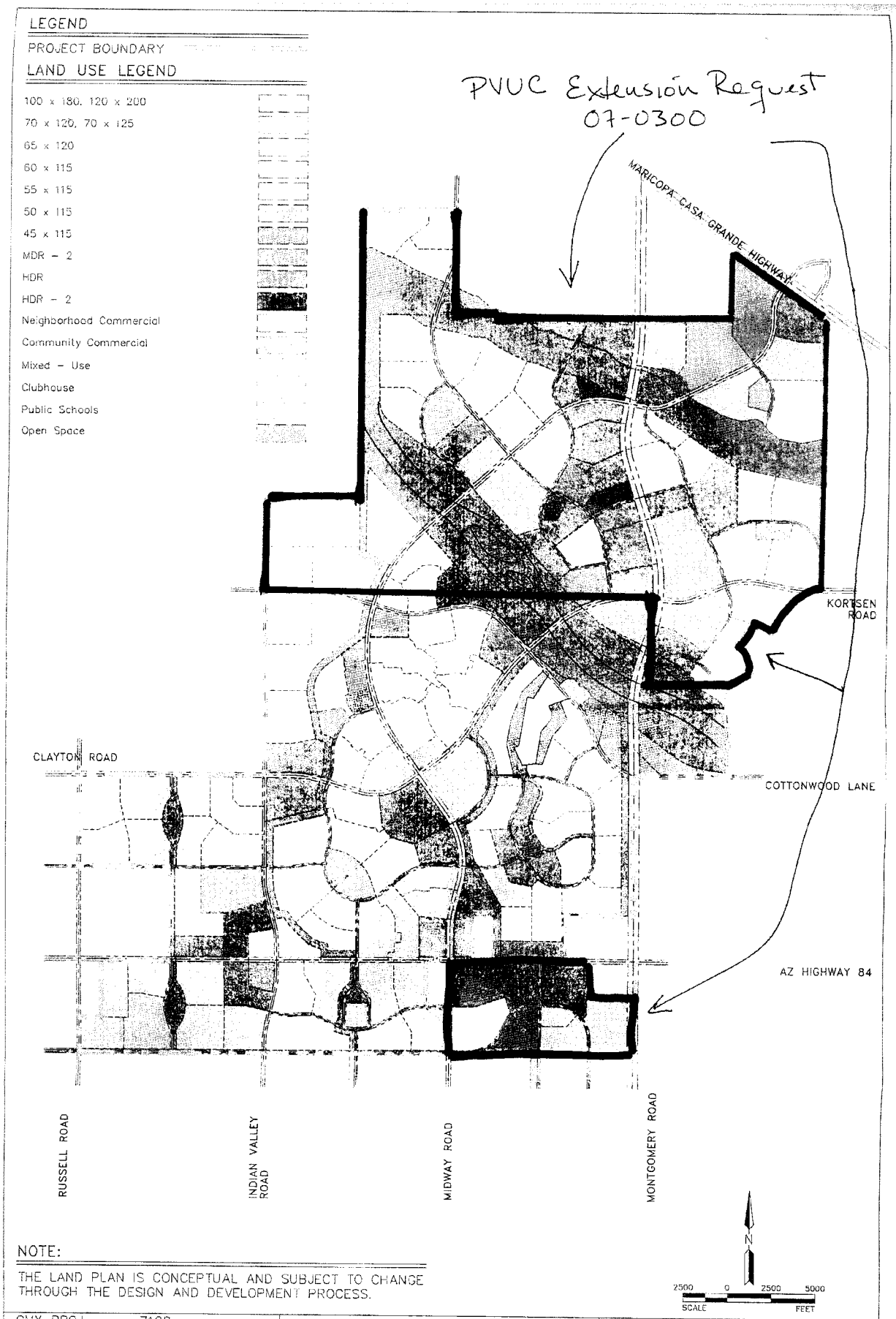

NOTE:

THE LAND PLAN IS CONCEPTUAL AND SUBJECT TO CHANGE THROUGH THE DESIGN AND DEVELOPMENT PROCESS.

CMX PROJ:	7128
DATE:	NOV 2006
SCALE:	1"=2500'
DRAWN BY:	BC
CHECKED BY:	AP

LEGENDS
MONTGOMERY ROAD & HIGHWAY 84
PINAL COUNTY, ARIZONA

FIG 2: LAND USE PLAN

7740 N. 16TH ST. STE.100
PHOENIX, AZ 85020
PH (602) 567-1900
FAX (602) 567-1901
www.cmxinc.com
CMX

W:\7100\7128\Water Resources\W-Exhibits\C-All\SubJ\F2-7128-LU-EX.dwg 11-20-2006 - 1:17pm

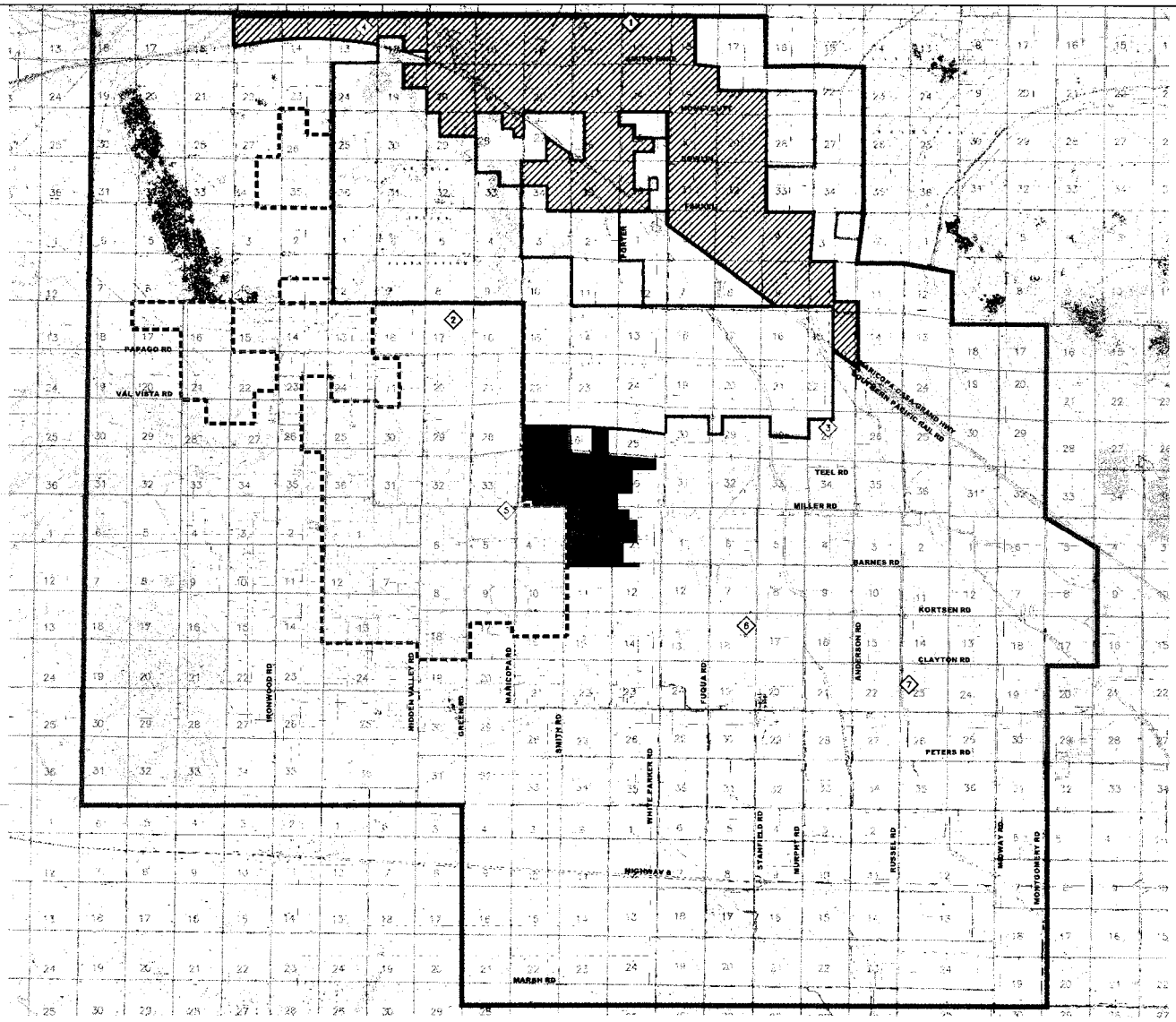

LEGEND

1	CAMPUS 1 WRF
2	CAMPUS 2 WRF
3	CAMPUS 3 WRF
4	CAMPUS 4 WRF
5	CAMPUS 5 WRF
6	CAMPUS 6 WRF
7	CAMPUS 7 WRF

REVISIONS			
NO	DATE	BY	DESCRIPTION

File Name: [illegible]

Designed By
Drawn By AA
Checked By CHC

DSWA
DAMON S. WILLIAMS ASSOCIATES, LLC

PRELIMINARY
NOT FOR CONSTRUCTION OR RECORDING

GLOBAL WATER
RELIABLE RENEWABLE REUSABLE

PROPOSED PVUC 208 CONSOLIDATED SERVICE AREA

WRF LOCATIONS AND KEY FEATURES

DSWA Project No 050310
Date MARCH 2006
Dwg No EXHIBIT 3
Sht No of

ID	Task Name
1	Well Development - Assessment Program
2	Well Development - Design
3	Well Development - Permitting
4	Well Development - Construction
5	Well Development - Completion Milestone
6	
7	Raw Water Delivery - Design
8	Raw Water Delivery - Permitting
9	Raw Water Delivery - Construction
10	Raw Water Delivery - Completion Milestone
11	
12	Water Distribution Center - Design
13	Water Distribution Center - Permitting
14	Water Distribution Center - Construction
15	Water Distribution Center Completion Milestone
16	
17	Potable Water Distribution - Design
18	Potable Water Distribution - Permitting
19	Potable Water Distribution - Construction
20	Potable Water Distribution - Completion Milestone
21	
22	Wastewater Collection (SE) - Design
23	Wastewater Collection (SE) - Permitting
24	Wastewater Collection (SE) - Construction
25	Wastewater Collection (SE) - Completion Milestone
26	
27	Southeast Area Lift Station - Design
28	Southeast Area Lift Station - Permitting
29	Southeast Area Lift Station - Construction
30	Southeast Area Lift Station - Completion Milestone
31	
32	Wastewater Force Main - Design
33	Wastewater Force Main - Permitting
34	Wastewater Force Main - Construction
35	Wastewater Force Main - Completion Milestone
36	
37	Wastewater Collection (Eagle Shadow) - Design
38	Wastewater Collection (Eagle Shadow) - Permitting
39	Wastewater Collection (Eagle Shadow) - Construction
40	Wastewater Collection (Eagle Shadow) - Completion Milestone
41	
42	Wastewater Collection (Farrell) - Design
43	Wastewater Collection (Farrell) - Permitting
44	Wastewater Collection (Farrell) - Construction
45	Wastewater Collection (Farrell) - Completion Milestone

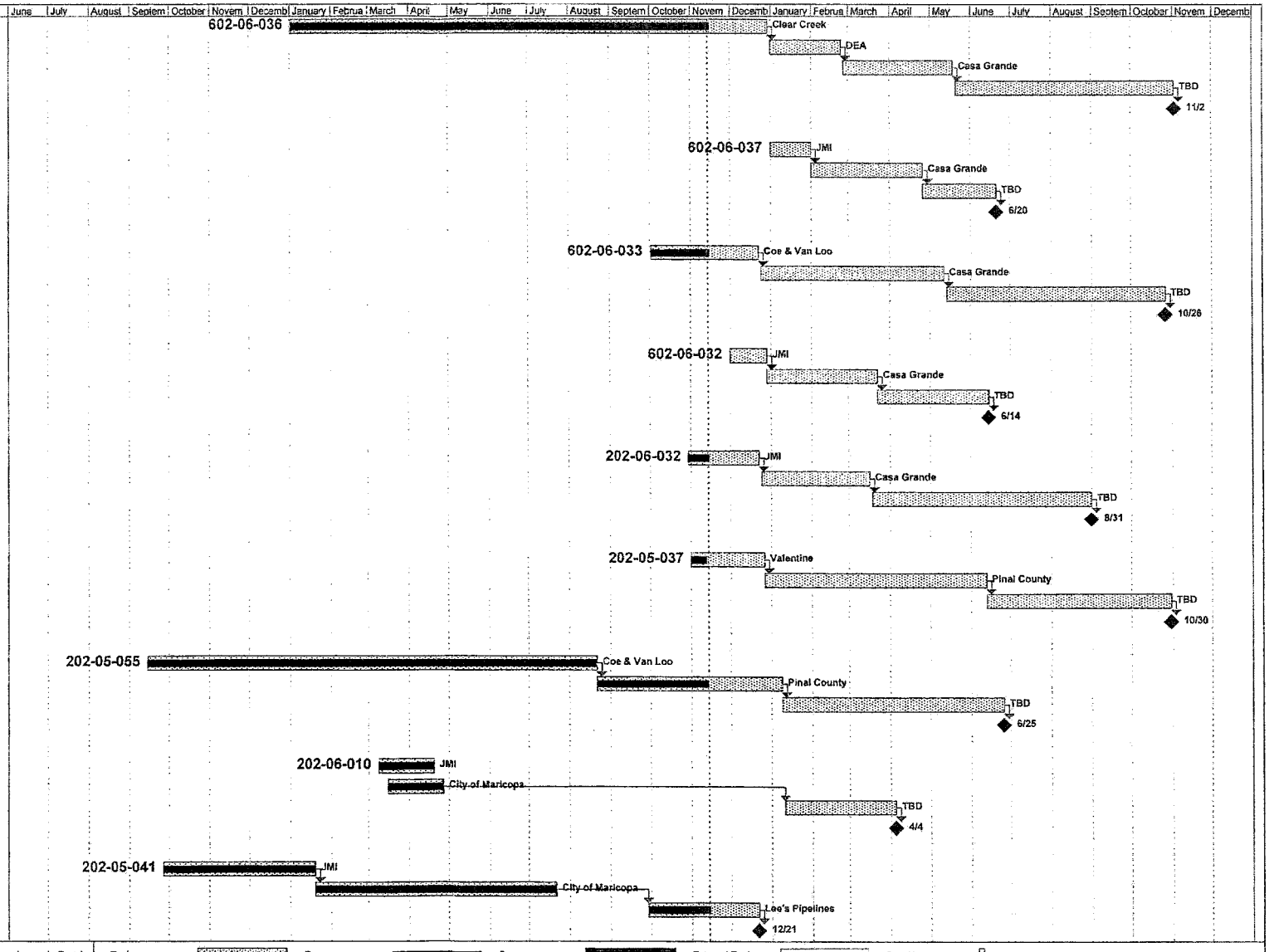

Project: Legends CAPEX
Date: Tue 11/14/06

Legends Ranch
CAPEX Schedule

Task | Progress | Summary | External Tasks | Deadline
Split | Milestone | Project Summary | External Milestone

Legends Ranch Development Water Quality Investigation

		Task			Water Quality					
Well Name	**ID #**	**Number**	**Authorized**	**Completed**	**Flow (gpm)**	**As**	**NO3**	**TDS**	**F**	**Notes**
Legends 1	605499	Site Visit	Dec-06	Dec-06	1,730	0.016	8.4	1300	0.8	Mobilized Jan-07 to perform spinner.
		Video	Dec-06	Jan-07						
		Spinner Log	Dec-06	Jan-07						
Legends 2	605498	Site Visit	Dec-06	Dec-06	2,400	0.043	11.0	1400	0.6	Flow may be high due to bad flow, will be confirmed during spinner.
		Video	Dec-06							
		Spinner Log	Dec-06							
Legends 3	605511	Site Visit	Dec-06	Jan-07	2,000	0.014	14	990	0	
		Video								
		Spinner Log								
Legends 4	605512	Site Visit	Dec-06	Dec-06	1,000	0.009	12	1000	0	Well casing collapsed during video. Recommend well be abandoned. Well is in a wash - not available
		Video	Dec-06	Dec-06						

Exceeds MCLs, requires blending or treatment
Well for extension area - arsenic treatment will be required

CTS# 144120

STAFF SUMMARY SHEET

	TO	ACTION	SIGNATURE	DATE
1	Chris Varga, Section Manager	Signature		12/6/06
2	Joan Card, WQD Director	Signature		12-16-06
3	Patrick Cunningham	Signature DEC 26 2006		12/26/06
4	Stephen A. Owens, Director	Signature	SAO	1/19/07

ACTION OFFICER	TITLE	PHONE	TRANSMITTAL DATE
Edwina Vogan	Regional Planning Coordinator	602.771.4606	12/5/06

SUBJECT
Palo Verde Utility Co. (PVUC) Consolidated Service Area, June, 2006 (6 Copies (Water Resources)

EFFECTIVE DATE

SUMMARY This amendment expands the 208 service area for PVUC from its current 32 sections for PVUC North to approximately 300 sections in and around the City of Maricopa and a portion of the City of Casa Grande (see exhibits 2 & 3). The plan consolidates the service areas of the existing PVUC North, the PVUC Southwest service area and the former 387 Wastewater Improvement District into one comprehensive planning document. With the approval of this consolidated plan those previous plans will become null and void. In addition, this document incorporates plans for wastewater infrastructure throughout the City of Maricopa General Planning Area and the City of Casa Grande Western Planning Area, as called out in executed Memoranda of Understandings between Global Water Resources, parent company of PVUC, and the two cities. The plan specifically excludes service to the Red River development, a 2000+ acre master planned community, with a separately approved 208 Plan to be serviced by Santa Rosa Utilities Co. (approved in 1998), as well as the Ak Chin Indian Community at this time.

In short, the consolidated plan divides the planning area into six sewer sheds that will be serviced by up to seven water reclamation facilities (WRF) (see exhibit 8). The boundaries of these basins are somewhat fluid to allow infrastructure development to be responsive to the extent and pace of growth in the area. Land for four of the seven WRF sites has been purchased by PVUC and so are site certain. The potential locations for the remaining three sites are designated by a 2 mile radius circle on the plan. Once the final location for each is determined, PVUC will prepare minor amendments to the consolidated plan to designate those locations. This is also the first of several amendments by private utilities that address EPA's questions regarding the authority of a private utility to serve the function of a Designated Management Agency under the Clean Water Act.

RECOMMENDATION
Staff recommends certifying the CWA 208 Plan and the DMA authorities analysis and sending forward to EPA for review.

DEC - 7 2006

ATTACHMENTS

1. CWA 208 Plan, Checklist & certification memo
2. DMA analysis & supporting documentation
3. Public participation packet

Janet Napolitano
Governor

ARIZONA DEPARTMENT OF ENVIRONMENTAL QUALITY

1110 West Washington Street • Phoenix, Arizona 85007
(602) 771-2300 • www.azdeq.gov

Stephen A. Owens
Director

JAN 19 2007

Ms. Alexis Strauss, Director
EPA Region IX, Water Division
75 Hawthorne Street (WTR-1)
San Francisco, CA 94105

Dear Ms. Strauss:

Pursuant to Section 208 of the Clean Water Act and 40 CFR 130.6(e), I certify that the *CWA 208 Plan Amendment for the Palo Verde Utility Company (PVUC) Consolidated Service Area, June 2006*, is consistent with both the State of Arizona's and the Central Arizona Association of Governments' Water Quality Management Plans. This amendment also includes a legal review, by the proponent, as to the authorities of a private utility to carry out the functions of a Designated Management Agency (DMA) under CWA 208(b)(2), CWA 208(c), and 40 C.F.R. 130.6(c)(5). ADEQ has reviewed the information and believes it addresses the issues raised by EPA in its July 20, 2006 letter.

PVUC, by virtue of the Certificate of Convenience and Necessity (CC&N) granted to it by the Arizona Corporation Commission, has the ability to construct, operate and maintain the wastewater collection, treatment and disposal system within its CC&N area. Through Memoranda of Understanding with the Cities of Maricopa and Casa Grande, PVUC will also plan wastewater infrastructure and provide wastewater services for the Planning Areas of the cities as outlined in those agreements. In the future, these communities may elect to request official DMA status for their service and planning areas. Should either community become the DMA, it would be appropriate to amend this CWA 208 Plan to acknowledge the DMA status and any changes to the agreement between the city and PVUC regarding infrastructure planning and provision of wastewater service.

As the Governor's designee for the State's Water Quality Management program, I hereby transit this amendment and supporting documentation to EPA for review.

Sincerely,

Stephen A. Owens
Director

Enclosures: Final CWA 208 Plan, public participation packet, DMA Authority Review

Janet Napolitano
Governor

ARIZONA DEPARTMENT OF ENVIRONMENTAL QUALITY

1110 West Washington Street • Phoenix, Arizona 85007
(602) 771-2300 • www.azdeq.gov

Stephen A. Owens
Director

December 21, 2006

Maxine Leather, Director
Central Arizona Association of Governments
Historic Belmont Building
271 Main Street
Superior, AZ 85273

Re: CAAG 208 Plan Amendment for the Palo Verde Utilities Co. Consolidated Service Area

Dear Ms. Leather:

The Arizona Department of Environmental Quality (ADEQ) has completed its review of the CWA 208 plan amendment for the Palo Verde Utilities Co. Consolidated Service Area submitted by CAAG in August, 2006. ADEQ has been working with the utility on its response to the Environmental Protection Agency's July 20, 2006 letter regarding the authorities of private utilities to function as Designated Management Agency's (DMA) under the Clean Water Act. Both the plan amendment and the DMA demonstration are now complete and we anticipate sending them to the Director for certification this week. Following the Director's certification, the packet will be sent to EPA for its review.

This will be the first 208 plan amendment that ADEQ has certified that includes a legal review, by the proponent, as to the authorities of a private utility to carry out the functions of a Designated Management Agency (DMA) under CWA 208(b)(2), CWA 208(c), and 40 C.F.R. 130.6(c)(5). It's important to note we are not "designating" PVUC as the management agency but in the absence of an existing DMA for the area, PVUC has demonstrated the ability to carry out the functions required by federal law.

PVUC, by virtue of the Certificate of Convenience and Necessity (CC&N) granted to it by the Arizona Corporation Commission, has the ability to construct, operate and maintain the wastewater collection, treatment and disposal system within its CC&N area. ADEQ understands that through a Memoranda of Understanding with the municipalities of Maricopa and Casa Grande, PVUC will plan wastewater infrastructure and provide wastewater service for the areas of the cities as outlined in these agreements.

Both Maricopa and Casa Grande have discussed the possibility of becoming the DMA in the future, however neither community has submitted a complete request at this time. Should either body become the DMA, it will be appropriate to amend this CWA 208 Plan to acknowledge the

new DMA status and any changes to the agreements with PVUC regarding infrastructure planning and provision of wastewater services.

As our partner in regional water quality management, we wanted to let you know the status of this plan and why it had been under review for so long. Hopefully the time taken to complete these first reviews and develop standards for what these demonstrations contain will help with future requests.

If you have any questions, please contact me at 602.771.4416 or via email at taunt.linda@azdeq.gov.

Sincerely,

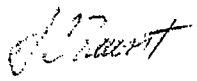

Linda Taunt, Deputy Director
Water Quality Division

cc: J. Peter Armenta, Environmental Planner, CAAG
Edwina Vogan, Regional Planner Coordinator, ADEQ
David Snider, Supervisor, District 3, Pinal County

208 WQM Amendment Checklist

Designated Planning Agency: Central Arizona Association of Governments

Name of Amendment: *Palo Verde Utility Company (PVUC) Consolidated Service Area, June 2006*

Amendment Summary: This amendment expands the 208 service area for PVUC from its current 32 sections for PVUC North to approximately 300 sections in and around the City of Maricopa and a portion of the City of Casa Grande (see exhibits 2 & 3). The plan consolidates the service areas of the existing PVUC North, the PVUC Southwest service area and the former 387 Wastewater Improvement District into one comprehensive planning document. With the approval of this consolidated plan those previous plans will become null and void. In addition, this document incorporates plans for wastewater infrastructure throughout the City of Maricopa General Planning Area and the City of Casa Grande Western Planning Area, as called out in executed Memoranda of Understandings between Global Water Resources, parent company of PVUC, and the two cities. The plan specifically excludes service to the Red River development, a 2000+ acre master planned community, with a separately approved 208 Plan to be serviced by Santa Rosa Utilities Co. (approved in 1998), as well as the Ak Chin Indian Community at this time. As part of the letter of understanding between PVUC and Ak Chin, the two parties will continue to dialogue regarding provision of utilities on the reservation.

In short, the consolidated plan divides the planning area into six sewer sheds that will be serviced by up to seven water reclamation facilities (WRF) (see exhibit 8). The boundaries of these basins are somewhat fluid to allow infrastructure development to be responsive to the extent and pace of growth in the area. Land for four of the seven WRF sites have been purchased by PVUC and so are site certain. The potential locations for the remaining three sites are designated by a 2 mile radius circle on the plan. Once the final location for each is determined, PVUC will prepare minor amendments to the consolidated plan to designate those locations.

Disposal Option(s): A+ effluent will be used for beneficial reuse for irrigation of common-areas, golf courses and crops, industrial/commercial applications, residential irrigation, and residential non-potable uses; recharge; or direct discharge to surface waters. Recharge will likely occur at the WRF site as well as other locations throughout the planning area.

PVUC, through a Letter of Understanding with the Ak Chin Indian Community, will not discharge to surface waters upstream of that Indian Community. Exhibit 9 shows the three discharge locations, as approved in the recent PVUC North amendment for flows up to 9.0 MGD, as well as three proposed discharge points, all north of the Ak Chin reservation. PVUC has not made applications for AZPDES discharges for the three new locations at this time.

If AZPDES, name of receiving water, 303 (d) status:

WRF Designation	Discharge location	303(d)?
Campus 1 (north)	Santa Cruz Wash	No
Campus 3 (southeast)	Santa Cruz Wash, north of Ak Chin Community	No
Campus 4 (north northwest)	Vekol Wash, north of Ak Chin Community	No

Review Criteria	*Comments*
Authority	Palo Verde Utility Company has prepared an analysis of its authorities to perform the functions of a Designated Management Agency as enumerated under Section 208(c)(2)(A)-(I) of the Clean Water Act. The analysis and supporting documentation is enclosed as an attachment to this submittal and, when approved, will become an appendix to the final plan document.
20-year Needs	The U.S. Census Bureau, Census 2000, set Pinal County's population at 179,727 and projected its population in 2005 to be 181,475. Pinal County has indicated a growth rate much faster than published projections and estimates the 2005 population of the county at 248,664. The Cities of Maricopa and Casa Grande projections for this planning area in 2025, based on conservative figures for occupancy and per unit flows, are for nearly 600,000 dwelling units and expected wastewater flows of 120 MGD. PVUC has planned infrastructure for these numbers based on seven WRFs at full buildout, each from 13-22 MGD each, but the plan is flexible to allow conveyance of flows between adjacent service areas and sewer sheds until an additional facility is warranted or should development in the area slow. The multiple plants also provide effluent closer to the final destination points of use.
Regulations	An Aquifer Protection Permit (APP) will be required for operation of the facility; an Arizona Pollutant Discharge Elimination System Permit (AZPDES) for any surface water discharges, a Reclaimed Water Permit for reuse and an Underground Storage Permit must be obtained from ADWR for groundwater recharge. During the construction phase for any of the WRFs, a Stormwater Pollution Prevention Plan (SWPPP) is required. This plan is solely for the wastewater and reclaimed collection, treatment and distribution systems. PVUC is not a development company, nor owned by a development firm and therefore has no ability to manage how the planning area develops outside of the water, reclaimed and wastewater utilities.
Construction	The PVUC system will be built as an integrated network which will allow conveyance of flows from one area to an adjacent area as needed. During the start up of any new WRF, flows will be conveyed to an adjacent WRF for treatment until the new facility is operating at full scale.

Financing

Infrastructure expansion of WRFs, lines, lift stations, etc. will be financed by way of equity from Global Water Resources, the PVUC parent company. PVUC customers will pay user fees as determined by the AZ Corporation Commission. In addition, reclaimed water will be sold to end users. Pipelines and interceptors within communities will be constructed by the developers under agreement with PVUC and flows conveyed through contracts with PVUC. Reimbursement for this construction is through Advance in Aid of Construction agreements, approved by the AZ Corporation Commission.

Implementation

The only treatment plant that is operational in this 300 square mile area is the PVUC North facility. The area has been primarily agricultural and low density, suburban ranchette type development. In the past 24 months, development pressures in the area have increased dramatically and approved developments in the county and City of Maricopa require service from at least two WRFs today. Future built homes will fill a demand for affordable housing and will provide an increased tax and employment base for Pinal County.

Public Participation

Public Meeting: April 10, 2006 (two locations – Casa Grande & Maricopa)
Environmental Planning Committee meetings: April 19, 2006, May 19, 2006 & June 14, 2006
Management Committee meetings: April 21, 2006 & June 16, 2006
Regional Council: June 23, 2006
WQMWG Meetings: June 13, 2006 & July 13, 2006
ADEQ Certification letter:

Discussion

This is the largest CWA 208 plan that CAAG and ADEQ have reviewed and approved. Due to the size and complexity of the plan, multiple entities had input into the final document including Pinal County, Casa Grande, Maricopa, the Gila River Indian Community and the Ak Chin Indian Community. The final document represents a comprehensive plan that all local governments, including the two tribes have acknowledged support for – some based on private agreements with the utility. The majority of the comments on the plan came from the tribes. In the end, the Ak Chin Indian Community has entered into a letter of understanding with PVUC and continues to dialogue about development and service throughout this area. PVUC is working with the Gila River Indian Community on issues of concern which, all agree, are better addressed through the permitting programs.

ADEQ has recently received a telephone call from Supervisor Snider who has heard rumor that PVUC is being recognized as the Designated Management Agency (DMA) under this plan. This is incorrect. PVUC has responded to a July 20, 2006 letter from EPA requesting a demonstration of what authorities a private utility has to function as a DMA. EPA finds that the CWA 208 program requires a DMA for each plan. The plan clearly indicates that the two cities have intentions of

filing amendments to become DMA (page 1-3 and page 1 of Amendment Checklist). In the interim, both cities have signed MOUs (in appendix C) with PVUC to provide water and wastewater service in these expansion areas that are not yet part of either city's incorporated boundary. Letters of support for the consolidated amendment from both communities are included in appendix D.

MASTER WASTEWATER REPORT
FOR
LEGENDS

TABLE OF CONTENTS

1.0 INTRODUCTION 1
- 1.1 General Description 1
- 1.2 Project Location 1
- 1.3 Land Use 1
- 1.4 Topography 1
- 1.5 Service Provider 2
- 1.6 Purpose 2
- 1.7 Phasing 2

2.0 POPULATION PROJECTION 3

3.0 WASTEWATER MASTER PLAN 4
- 3.1 Design Criteria 4
- 3.2 Wastewater Flow Generation 6
- 3.3 Existing Sanitary Sewer System 6
- 3.4 Modeling 6
- 3.5 Proposed Wastewater Collection System 7

4.0 PERMITTING 7

5.0 CONCLUSIONS 8

6.0 REFERENCES 8

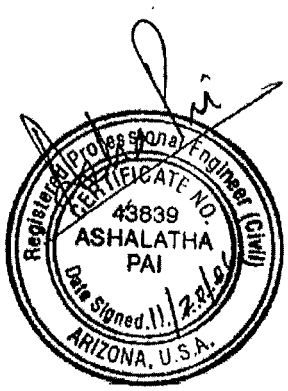

APPENDICES

A. Figures
B. Tables
C. SewerCAD Tables

FIGURES

1. Vicinity Map ..... Appendix A
2. Land Use Plan ..... Appendix A
3. Conceptual Phasing Plan ..... Appendix A
4A. Wastewater Master Plan - Outfall #1 ..... Back Pocket
4B. Wastewater Master Plan - Outfall #2 ..... Back Pocket
4C. Wastewater Master Plan - Outfall #3 ..... Back Pocket

TABLES

1. Project Location 1
2. Land use and Population Projection ..... Appendix B
3. Population Projection Summary 3
4. Wastewater Design Criteria 5
5. Wastewater Flow Calculation by Parcels ..... Appendix B

MODEL RESULTS

1. Average Daily Flow Scenario ..... Appendix C
2. Peak Flow Scenario ..... Appendix C

ABBREVIATIONS & TERMINOLOGY

AAC Title 18	Arizona Administrative Code Title 18. Arizona State Regulations Governing Wastewater Collection and Treatment
ACC	Arizona Corporation Commission
ADEQ	Arizona Department of Environmental Quality
ADWR	Arizona Department of Water Resources
amsl	Above mean sea level
Average Daily Flow	Anticipated mean wastewater generation rate over a 24-hour period
AZPDES	Arizona Pollutant Discharge Elimination System
CC	Community Commercial
CC&N	Certificate of Convenience and Necessity
cfs	cubic feet per second
DU	Dwelling Unit
fps	feet per second
Global	Global Water- Palo Verde Utility Company, LLC or subsidiary
gpad	gallons per acre per day
gpcd	gallons per capita (person) per day
gpd	gallons per day
gpm	gallons per minute
gpsd	gallons per student per day
HDR	High Density Residential
MDR	Medium Density Residential
LDR	Low Density Residential
MGD	million gallons per day (1,000,000 gpd)
NAVD 88	North American Vertical Datum of 1988
NC	Neighborhood Commercial
NGVD 29	National Geodetic Vertical Datum of 1929
Peak Flow	Anticipated flow rate for the system at peak usage times. The peak flow is equal to the average day flow multiplied by the peaking factor as determined in the Town of Buckeye design criteria.
Persons/DU	Persons per dwelling unit
PV WRF	Palo Verde Water Reclamation Facility

1.0 INTRODUCTION

1.1 General Description

Legends (the Project) is a master-planned community located in Pinal County, encompassing approximately 7,000 acres of land. The site is generally unimproved desert land with vegetation consisting of Creosote Bush, Saguaro, Cholla and Prickly Pear Cactus, Palo Verde, Mesquite and Ironwood Trees. The Project generally slopes to the northwest at an average grade of two percent. The Santa Cruz Wash and North Branch Santa Cruz Wash traverse the site diagonally from east to northwest and converge at the northwest corner of the site.

1.2 Project Location

The Project is generally bound to the north by West Teel Road and Maricopa Casa Grande Highway, on the south by Ash Avenue, on the west by Russell Road and on the east by Montgomery Road, as illustrated in Figure 1. Table 1 presents the Townships, Ranges and Sections of the Gila and Salt River Baseline and Meridian that are encompassed by the Legends property.

TABLE 1
PROJECT LOCATION

Township	Range	Sections
T6S	R4E	1,12, 13, and 23-26
T6S	R5E	5,6,7,8,17,18, 19, 20, 21, 22, and 27-30

1.3 Land Use

Legends is a mixed-use master planned community that includes open-space, single and multi-family residential, schools, community parks, commercial parcels and golf course, as shown in Figure 2. The land use plan for Legends is also presented in tabular format in Appendix B (Table 2). The Legends development will include approximately 23,000 dwelling units, 11 schools, approximately 1,424 acres of parks and open space and over 600 acres of commercial development.

1.4 Topography

The topographic data used for the basis of design was obtained from MapMart at 1-foot intervals. In order to maintain a common coordinate system for this Project, the horizontal coordinate system of the MapMart topography data was converted to the State Plane, North American Vertical Datum of 1983 (NAVD 83), Arizona Central, US Feet, and the vertical system was converted to National Geodetic Vertical Datum of 1929 (NGVD 29), US Feet.

The topographic data shows that the property has a high elevation of approximately 1,348 feet above mean sea level (amsl) at the southeast corner of

the Project and a low elevation of approximately 1,299 feet amsl near the Santa Cruz wash. The local topography is generally flat with a divergent, gentle slope to northwest across the property.

1.5 Service Provider

Currently, a portion of Legends is within the existing service area of Francisco Grande. However, Global Water- Palo Verde Utility Company, LLC or its subsidiary (Global) will serve as the wastewater service provider for the Legends development. Global is also in the process of filing an application with the Arizona Corporation Commission (ACC) to secure the Certificate of Convenience and Necessity (CC&N) for the area, which includes Legends.

1.6 Purpose

The Legends Wastewater Master Plan reflects the current land plan and the associated wastewater system infrastructure needed to support this land plan. The purpose of this Wastewater Master Plan is to provide a basic conceptual design of the property's proposed wastewater collection and treatment systems. This Wastewater Master Plan is also intended to provide a general overall wastewater concept, establish design guidelines and become the basis for more detailed studies as the design of the development continues. The proposed wastewater system does not consider flows from adjacent and/or off-site properties.

The study illustrates that the Legends development can be served by a gravity sewer collection system, which will drain to the three proposed outlets located at intersection of Clayton Road and Russell Road, Kortsen Road and Indian Valley Road and on the North Midway Road. The wastewater flow will be eventually conveyed to Palo Verde Water Reclamation Facility (PV WRF).

The Wastewater Master Plan described herein is in accordance with the design criteria specified by Global.

1.7 Phasing

The Project is planned to be developed in three main phases: Phase A, B and C. Each of these phases is further phased in to sub-phases as illustrated in Figure 3.

On-site phasing will dictate the construction sequence and timing of the water reclamation facility and the wastewater infrastructure. The final design, location, and construction sequence of wastewater system improvements will be defined and implemented in each project phase concurrent with preliminary plat submittals through the development of a Phasing Unit Wastewater System Report. Each Phasing Unit Wastewater System Report will address significant changes in wastewater loads for the current and prior Phasing Units, which may occur as development progresses. Phasing Unit Wastewater System Reports shall generally conform to the Master Plan or an amendment to the Master Plan

shall be submitted and approved. A registered professional engineer, licensed to practice in the State of Arizona, will prepare each Phasing Unit Wastewater System Report.

2.0 POPULATION PROJECTION

The onsite population projections for Legends are based on the land use plan presented in Figure 2 and are detailed in Appendix B (Table 2). Residential parcels with densities greater than or equal to six dwelling units (DU) per acre were assumed to have a population density of 2.0 persons per dwelling unit (persons per DU) and residential parcels with densities less than 6 DU per acre were assumed to have population densities of 2.6 persons per DU.

Using these assumptions, populations were determined for each parcel and the results are summarized in Table 3. Detailed breakdowns of the population projections for each parcel can be found in Appendix B (Table 2). The total projected population for the Legends development is 54,428 persons.

TABLE 3
POPULATION PROJECTION SUMMARY BY PHASE

Phase Description	Unit Count	Residential Population
Phase A		
Phase A-Sub Phase 1	2,411	5,900
Phase A-Sub Phase 2	2,760	6,624
Phase A-Sub Phase 3	2,245	4,491
Subtotal	**7,417**	**17,015**
Phase B		
Phase B-Sub Phase 1	3,302	8,278
Phase B-Sub Phase 2	3,609	8,770
Subtotal	**6,911**	**17,049**
Phase C		
Phase C-Sub Phase 1	5,305	12,128
Phase C-Sub Phase 2	3,386	8,237
Subtotal	**8,691**	**20,364**
Total	**23,019**	**54,428**

Notes:

Persons/HU		
Low Density (LDR/MDR)	Density<6	2.6
High Density (MDR-2,HDR)	Density>=6	2.0
Active Adult		2.0

3.0 WASTEWATER MASTER PLAN

3.1 Design Criteria

The design criteria utilized for the wastewater system infrastructure was based on the wastewater design criteria set by Global. Table 4 lists the design criteria applied to the development of the Wastewater Master Plan for the Legends master planned community.

In addition to these design criteria, the following assumptions were made:

- A Manning's roughness coefficient of 0.013 is specified for all pipes within this master plan. The pipe material utilized for this project will be identified at the design stage.
- Minimum and maximum pipe depths for the wastewater trunk lines are assumed to be limited to 7 and 26 feet respectively, wherever possible. This assumption is applied to the master plan report to ensure that later phases will be able to easily connect to the trunk line system and is not intended to be a system requirement.
- Existing ground surface elevations are used in the development of the design and to determine pipe depth.
- Pipe crowns are matched in manholes for pipes of different diameters.
- The ultimate design will consider the maximum manhole spacing of 500 ft and will conform to the requirements in Table 4.
- The allowable pipe slopes for several pipe sizes were determined using the minimum and maximum velocity criteria and the Manning's roughness coefficient as given in Table 4.
- A minimum cover of 7 feet is maintained for the sewer mains.

TABLE 4 WASTEWATER DESIGN CRITERIA		
Design Criteria	Value	Units
Flow Generation		
Residential	234	gpd/du
Schools	25	gpsd
Commercial	2,200	gpad
Peaking Factor		
Diameters < 12"	3.5	
Diameters ≥ 12"	Per AAC R18-9-E301 Part D	
Peaking Factor- AAC R18-9-E301 Part D		
Population	Peaking Factor	
100	3.62	
200	3.14	
300	2.90	
400	2.74	
500	2.64	
600	2.56	
700	2.50	
800	2.46	
900	2.42	
1000	2.38	
1001-10000	$(6.330 \times p^{-0.231}) + 1.094$	
10001-100000	$(6.177 \times p^{-0.233}) + 1.128$	
> 100000	$(4.500 \times p^{-0.174}) + 0.945$	
Full Pipe Velocity		
Minimum	2.0	fps
Maximum	8.0	fps
Percent Full		
By Depth (d/D)	75	%
By Capacity (q/Q)	91	%
Manning's Roughness Coefficient (n)	0.013	
Minimum Pipe Slopes	(ft/ft)	
8-inch	0.0035	
10-inch	0.0024	
12-inch	0.0019	
15-inch	0.0014	
18-inch	0.0011	
21-inch	0.00092	
24-inch	0.00077	
27-inch	0.00066	
30-inch	0.00057	

Maximum Manhole Spacing		
Pipe Size (inches)	Maximum Manhole Spacing (ft)	
Less than 15	400	
15 through 24	500	
Larger than 24	600	

Abbreviations: fps – feet per second
gpad – gallons per acre per day
gpcd – gallons per capita per day
gpd/du – gallons per dwelling unit per day
gpsd – gallons per student per day
ft - feet
ft/ft – feet/feet

Note:*Minimum and maximum velocities are based on pipes flowing full.

3.2 Wastewater Flow Generation

Based on the land uses, population projections and design criteria described in previous Sections, the average day wastewater flow generated by Legends is 6.93 million gallons per day (MGD). The peak day wastewater generation rate, utilizing the peaking factor outlined in Table 4 is 11.98 MGD.

Detailed onsite flow generation calculations for each parcel are located in Appendix B (Table 5). Table 5 also provides a cumulative flow summary that defines each of the flow combinations within the system.

3.3 Existing Sanitary Sewer System

As the majority of the area is undeveloped native rangeland, wastewater system infrastructure currently does not exist for the Legends area. As noted, Global or its subsidiary is planned to be the wastewater provider for the Legends master planned community. Global is in the process of filing an application with ACC to secure a CC&N to establish a private utility service area and it includes Legends.

3.4 Modeling

The proposed wastewater system was modeled using SewerCAD version 5.6 by Bentley Systems Inc. Model development began by placing a skeletonized network of wastewater sewers along major proposed roadways, ensuring that each parcel had access to at least one trunk line. The network was then optimized using factors such as the development boundary, phasing, ground slope, washes and proposed land use to determine the best placement of the sewer. Based on these factors, the proposed wastewater system for Legends consists of three separate systems that deliver flows to three separate outfall locations. The flows from the outfall locations will ultimately be discharged to the PV WRF.

The locations of the three outfalls are as follows:

- First outfall is located approximately at the intersection of Clayton Road and Russell Road.
- The second outfall is located at the intersection of Korsten Road and Indian Valley Road.
- The third outfall is located approximately at the northern corner of the Project boundary on the North Midway Road.

Based on the layout of the proposed wastewater system and project topography, each parcel was evaluated independently to determine where the loading should be placed on the trunk lines. To provide a more conservative design, the projected load over a section of pipe was loaded at the upstream end wherever possible. The calculated wastewater flows for each parcel were divided accordingly and assigned to the appropriate model node(s). A summary of the loadings assigned to each manhole in the hydraulic model is shown in Table 5 (Appendix B).

The sewer system was then designed for both the average daily flow and peak flow conditions, using the criteria outlined in Section 3.1. The resulting wastewater systems discharging to the three outfall locations is shown in Figures 4A, 4B and 4C (Appendix A).

3.5 Proposed Wastewater Collection System

The main backbone of the wastewater system discharging to the three different outfalls range in size from 8-inch to 30-inch pipes, set at a variety of slopes, depending on the pipe size. Structure depths for all the three systems range from 7 feet to 26 feet. Detailed model results are located in Appendix C.

The pipe locations, sizes, pipe cover and alignment presented in this master plan may change to reflect any changes in the land use plans and/or onsite grading as they evolve during the course of this project. In addition, during the detailed design of each phase, the Wastewater Master Plan may be revised to provide greater detail.

4.0 PERMITTING

Several regulatory permits and considerations will be required in the implementation of this wastewater master plan. These include, but are not limited to, the following:

- AZDPES/NPDES Permits, Arizona Department of Environmental Quality (ADEQ)
- Aquifer Protection Permit, ADEQ
- 208 Water Quality Management Plan, Maricopa Association of Governments (MAG)
- Underground Storage Facility Permit, Arizona Department of Water Resources (ADWR)
- Water Storage Permit, ADWR

- Recovery Well Permit, ADWR
- Reclaimed Water Permit, ADEQ
- Air Quality Permit, ADEQ
- Approval to Construct, ADEQ
- Approval of Construction, ADEQ
- Right-of-Way Permit

The developer and Global will coordinate efforts in obtaining necessary permits for Legends.

5.0 CONCLUSIONS

Based on the analysis performed herein, the following conclusions may be drawn:

1. This report outlines the locations and sizes of the proposed infrastructure required to provide wastewater collection and treatment services to the Legends development and the offsite areas.

2. The wastewater collection systems shown in Figures 4A, 4B and 4C (Appendix A) are designed according to the listed design criteria and is sufficient to service all the phases of the Project area.

3. Three outfall locations are proposed as part of this wastewater system. The ultimate discharge point from these outfall locations is the Palo Verde WRF. The Palo Verde WRF will have an average daily flow of 6.93 MGD from the Legend development.

4. This report is based on the conceptual land plan and existing topography. The Master Wastewater Report needs to be updated if the topographic data, land planning and the sequence of development differ significantly from the data presented in this report.

6.0 REFERENCES

Arizona Administrative Code, Title 18, Chapter 9.

Global Water Resources, L.L.C (July 2005). *Standards for the Planning, Design, and Construction of Water and Wastewater Systems.*

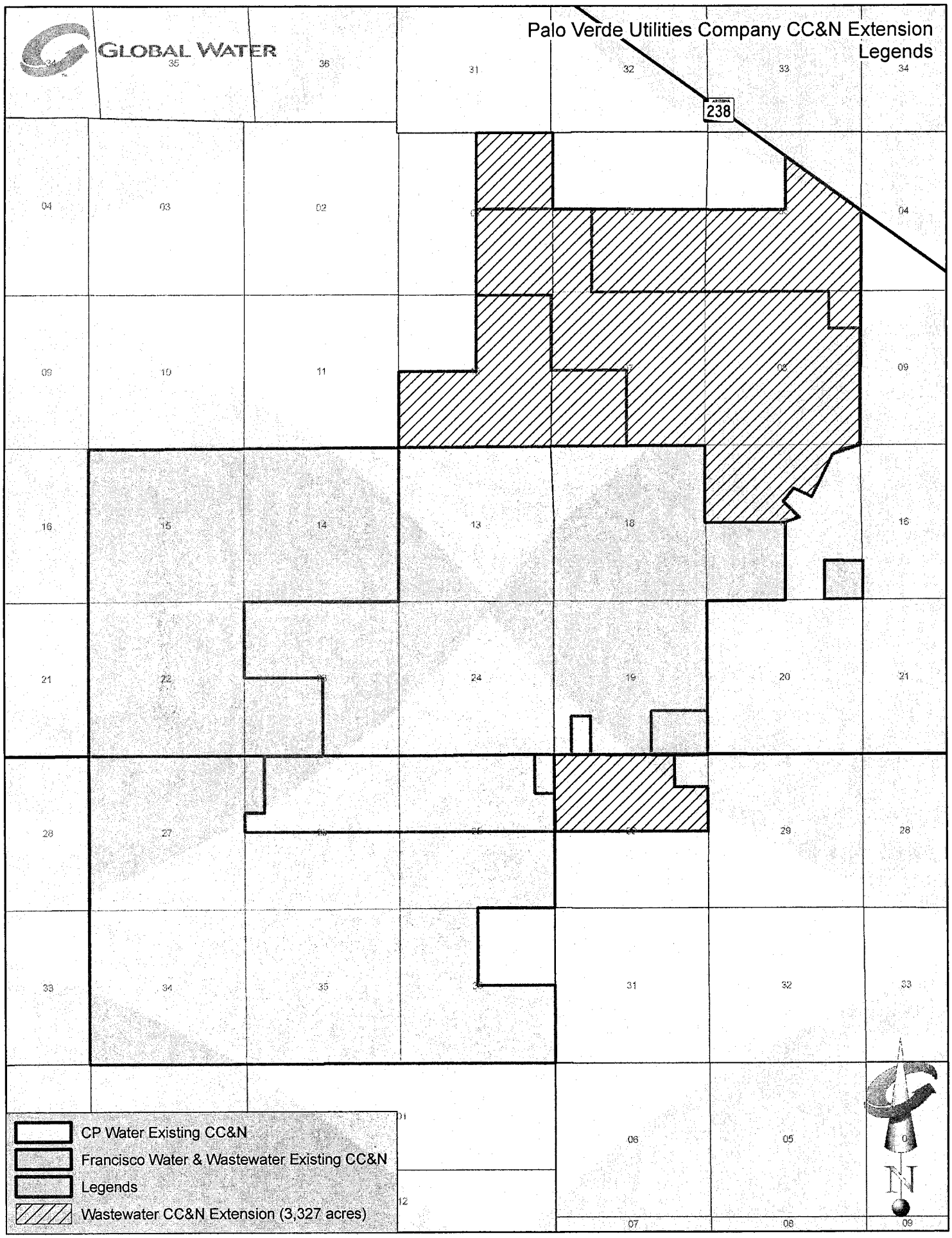
GLOBAL WATER
Palo Verde Utilities Company CC&N Extension
Legends
238
CP Water Existing CC&N
Francisco Water & Wastewater Existing CC&N
Legends
Wastewater CC&N Extension (3,327 acres)
N

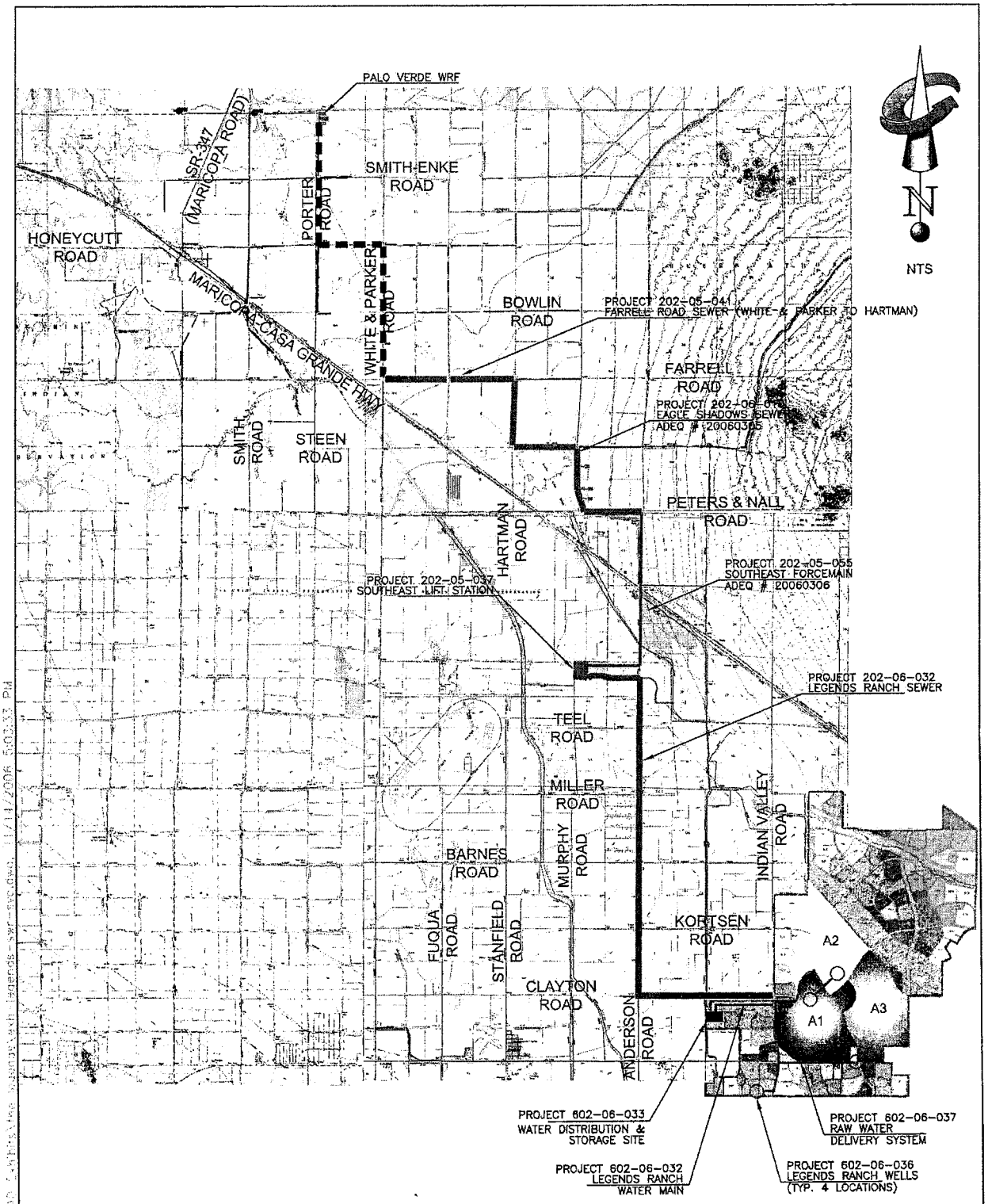

LEGEND

- PROPOSED GRAVITY SEWER
- EXISTING GRAVITY SEWER
- PROPOSED SEWER FORCE MAIN
- PROPOSED RAW WATER
- PROPOSED POTABLE WATER

GLOBAL WATER
RELIABLE · RENEWABLE · REUSABLE
21410 N. 19th Ave. · Ste. 201 · Phoenix, AZ 85027
Ph: 623.580.9000 · Fx: 623.580.9859
www.gwresources.com

Global Water - Palo Verde Utility Company
Global Water - Santa Cruz Water Company
Legends Ranch CAPEX

Drawn By: BB	Date: 11/06	Sheet: 1 OF 1	
App'vd By: SL	Date: 11/06	Drawing Number: EXH-01	
Scale: NTS			

SOUTH PROPERTY LINE CURVE DATA						
NO.	RADIUS	ARC	DELTA	TANGENT	CHORD	CHORD- BEARING
1	1200.00	1509.12	072°03'20"	872.74	1411.62	S72°20'24.0"W

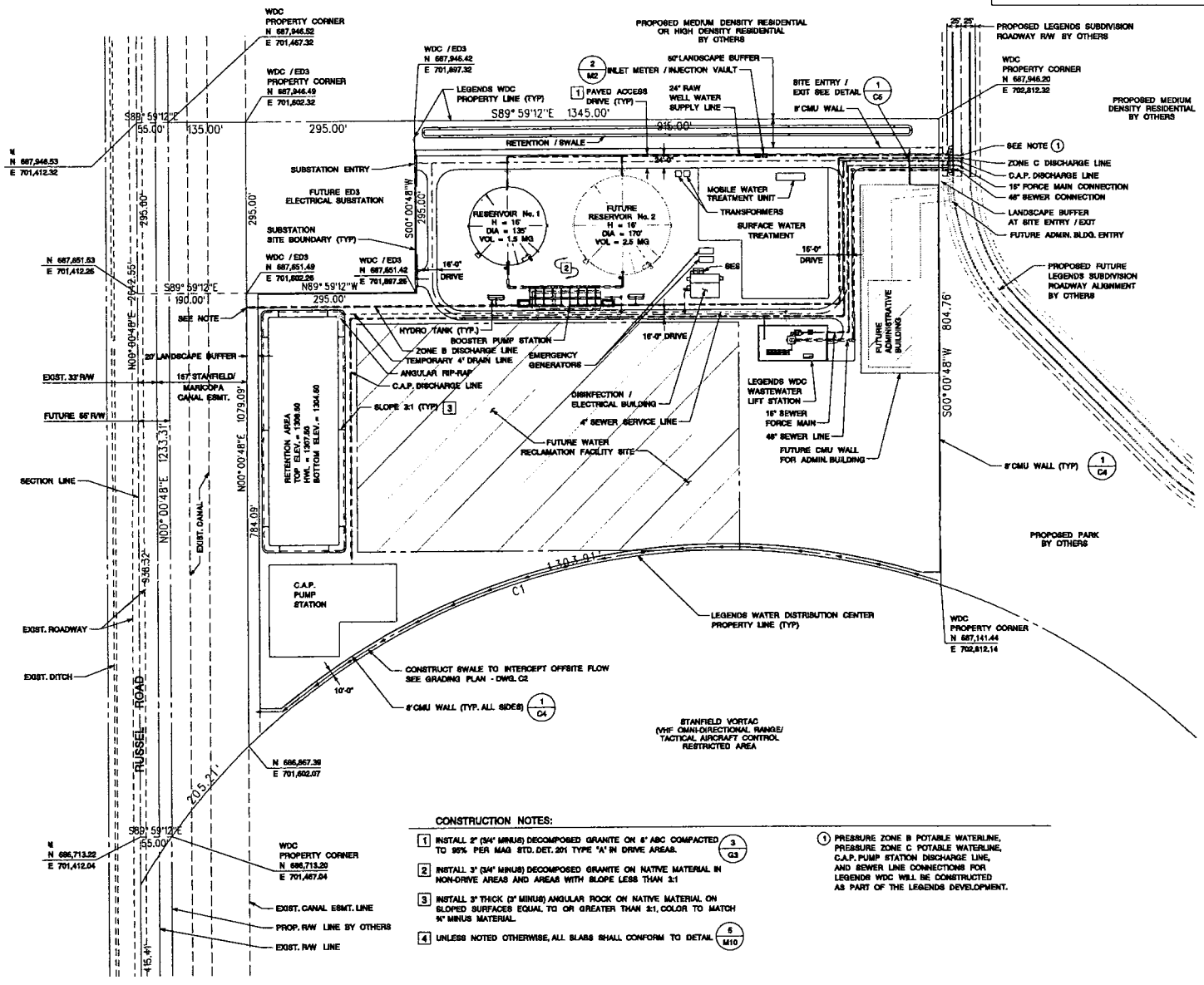

STORM WATER RETENTION CALCULATIONS
GROSS SITE AREA = 1,063,079 S.F. (24.4 AC. ±)
NET SITE AREA = 892,099 S.F. (20.5 AC. ±)
VOLUME REQUIRED = 142,141 C.F.
VOLUME PROVIDED = 158,149 C.F.

CONSTRUCTION NOTES:

1. INSTALL 2" (3/4" MINUS) DECOMPOSED GRANITE ON 6" ABC COMPACTED TO 95% PER MAG STD. DET. 201 TYPE "A" IN DRIVE AREAS. (3/G3)
2. INSTALL 3" (3/4" MINUS) DECOMPOSED GRANITE ON NATIVE MATERIAL IN NON-DRIVE AREAS AND AREAS WITH SLOPE LESS THAN 2:1
3. INSTALL 3" THICK (3" MINUS) ANGULAR ROCK ON NATIVE MATERIAL ON SLOPED SURFACES EQUAL TO OR GREATER THAN 2:1, COLOR TO MATCH 9" MINUS MATERIAL.
4. UNLESS NOTED OTHERWISE, ALL SLABS SHALL CONFORM TO DETAIL (5/M10)

(1) PRESSURE ZONE B POTABLE WATERLINE, PRESSURE ZONE C POTABLE WATERLINE, C.A.P. PUMP STATION DISCHARGE LINE, AND SEWER LINE CONNECTIONS FOR LEGENDS WDC WILL BE CONSTRUCTED AS PART OF THE LEGENDS DEVELOPMENT.

SCALE: 1" = 80'

PRELIMINARY NOT FOR CONSTRUCTION OR RECORDING

602-263-1100 602-263-1102 1-800-STAKE-IT

CVL
4550 North 12th Street
Phoenix, Arizona 85014
Telephone 602-264-6831
http://www.cvlcl.com

NO.	REVISION	DATE

Coe & Van Loo Consultants, Inc.

GLOBAL WATER - SANTA CRUZ WATER COMPANY, LLC
LEGENDS WATER DISTRIBUTION CENTER

SITE PLAN

PRELIMINARY NOT FOR CONSTRUCTION

DRAWING C1

CVL Contact: BRAD RICHARDS
CVL Project #: 1.01.0116705
CVL File #:

OVERALL CONST. DOC.# (4 OF 73)

© Copyright, CMX 2006 - This plan document set is the sole property of CMX. No alterations to these plans, other than adding "as-built" information, are allowed by anyone other than authorized CMX employees.

WASTEWATER SYSTEM

1. Wastewater line sizes are based upon the approved Master Wastewater Plan for Legends.
2. Global Water - Palo Verde Utility Company LLC is responsible for all wastewater line sizes 15" and larger.
3. All wastewater lines outside of the Legends project boundary are to be installed by Global Water at their expense.

LEGEND

Project Boundary
Global Responsible - Wastewater
DR Horton Responsible - Wastewater
Manhole*
*Not all proposed manholes are shown.

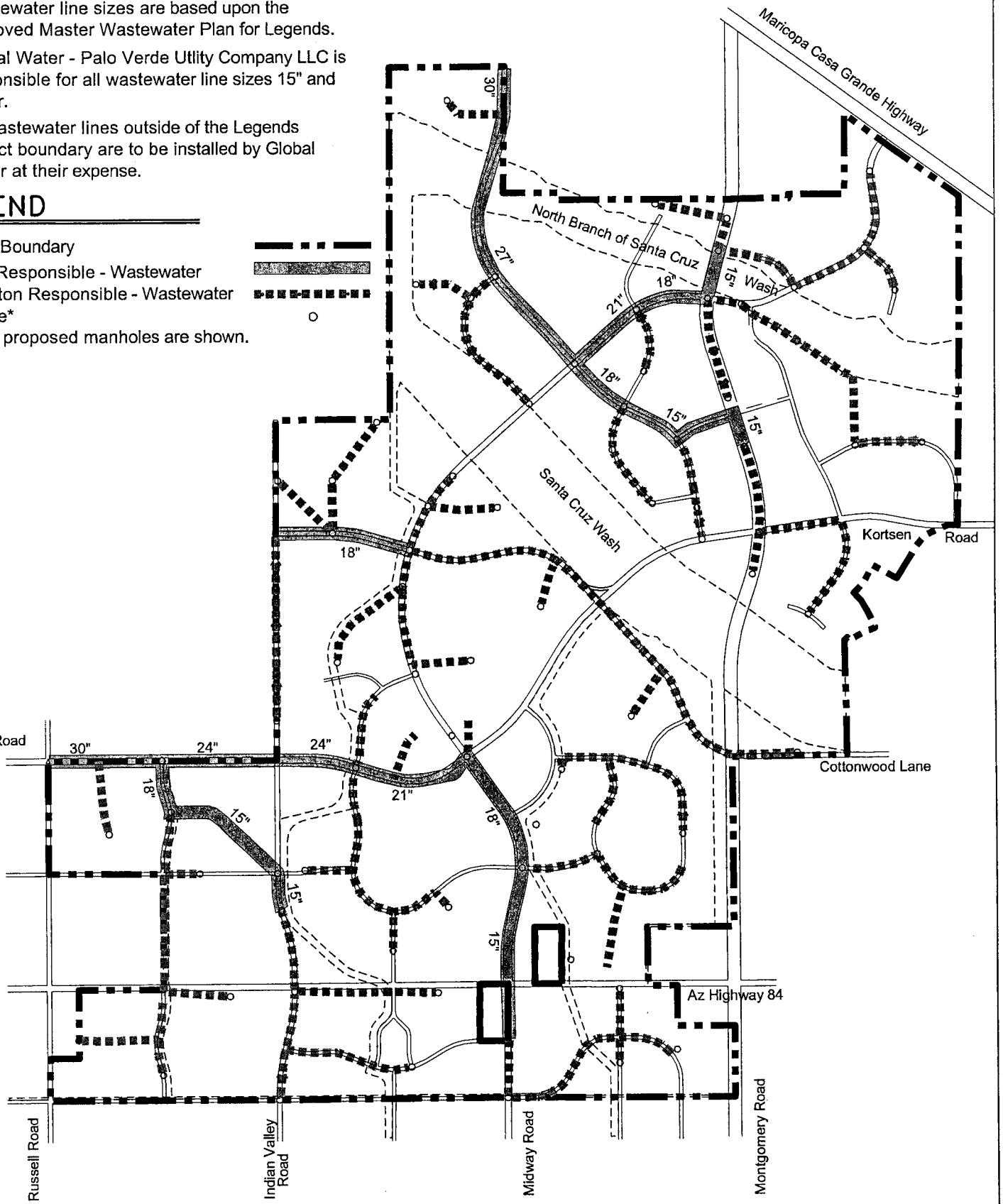

DWG. NO.	CMX PROJ: 7128	DATE: OCT.2006	SCALE: 1"=3000'
2	DESIGNED: NS	DRAWN: BC/AMP	APPROVED: AP
SHT. 2 OF 2	REV.		

LEGENDS
CASA GRANDE, ARIZONA
WASTEWATER SEGMENT RESPONSIBILITY

CMX
ENGINEERS • PLANNERS • LANDSCAPE ARCHITECTS • SURVEYORS • CONSTRUCTION MANAGERS
7740 N. 16TH ST. STE. 100
PHOENIX, AZ 85020
PHONE: (602) 567-1900
FAX: (602) 567-1901
www.cmxinc.com

MASTER WATER REPORT
FOR
LEGENDS

TABLE OF CONTENTS

1.0 INTRODUCTION 1
- 1.1 General Description 1
- 1.2 Project Location 1
- 1.3 Land Use 1
- 1.4 Topography 1
- 1.5 Service Provider 2
- 1.6 Purpose 2
- 1.7 Phasing 2

2.0 POPULATION PROJECTION 3

3.0 MASTER WATER REPORT 4
- 3.1 Design Criteria 4
- 3.2 Water Demands 5
- 3.3 Existing Water System Infrastructure 6
- 3.4 Modeling 7
- 3.5 Topography and Pressure Zones 7
- 3.6 Groundwater Wells 8
- 3.7 Water Storage Tanks 8
- 3.8 Water Campus 9
- 3.9 Booster Pump Station 9
- 3.10 Transmission/Distribution Network 9

4.0 REGULATORY PERMITS 10

5.0 SYSTEM MODEL AND RESULTS 10

6.0 CONCLUSIONS 11

7.0 REFERENCES 12

APPENDICES

A. Figures
B. Tables
C. Hydraulic Model Results

FIGURES

1. Vicinity Map ..... Appendix A
2. Conceptual Land Use Plan ..... Appendix A
3. Conceptual Phasing Plan ..... Appendix A
4a. Ultimate Water System ..... Back Pocket
4b. Phase A Water System ..... Back Pocket

TABLES

1. Project Location 1
2. Land Use and Population Projection ..... Appendix B
3. Population Projection Summary by Phase 3
4. Water Design Criteria 4
5. Water Demand Summary 6
6a. Ultimate Water Demand Calculations by Phase and Parcel ..... Appendix B
6b. Water Demand Calculations by Parcel for Phase A ..... Appendix B
7. Storage Volume Requirement 9
8. Summary of Hydraulic Model Results – Ultimate System 11

HYDRAULIC MODEL RESULTS

1. Average Day Demand Scenario ..... Appendix C
2. Maximum Day Demand Scenario ..... Appendix C
3. Peak Day Demand Scenario ..... Appendix C
4. Maximum Day + Residential Fire Flow Demand Scenario ..... Appendix C
5. Maximum Day + Commercial Fire Flow Demand Scenario ..... Appendix C

ABBREVIATIONS & TERMINOLOGY

Average Day Demand	Anticipated mean demand over a 24-hour period
BPS	Booster Pump Station
CC	Community Commercial
CC&N	Certificate of Convenience and Necessity
DU	Dwelling Unit
ft	feet
fps	feet per second
Global	Global Water - Santa Cruz Water Company, LLC
gpad	gallons per acre per day
gpcd	gallons per capita per day
gpd	gallons per day
gpd/stu	gallons per day per student
gpd/DU	gallons per day per dwelling unit
gpm	gallons per minute
HGL	hydraulic grade line
HDR	High Density Residential
LDR	Low Density Residential
LR WC	Legends Ranch Water Campus
MAG	Maricopa Association of Governments
Maximum Day Demand	Anticipated maximum daily demand over a year
MD+FF	Maximum day plus fire flow
MDR	Medium Density Residential
MG	million gallons (1,000,000 gallons)
MGD	million gallons per day (1,000,000 gpd)
MU	Mixed Use
NAD	North American Datum
NGVD	National Geodetic Vertical Datum
NC	Neighborhood Commercial
Peak Hour Demand	Anticipated peak hour demand within the maximum daily demand
psi	pounds per square inch (a typical unit of pressure)
PRV	Pressure Reducing Valve
SR WC	Solana Ranch Water Campus

1.0 INTRODUCTION

1.1 General Description

Legends (the Project) is a master-planned community located in Pinal County, encompassing approximately 7,000 acres of land. The site is generally unimproved desert land with vegetation consisting of Creosote Bush, Saguaro, Cholla and Prickly Pear Cactus, Palo Verde, Mesquite and Ironwood Trees. The Project generally slopes to the northwest at an average grade of two percent. The Santa Cruz Wash and North Branch Santa Cruz Wash traverse the site diagonally from east to northwest and converge at the northwest corner of the site.

1.2 Project Location

The Project is generally bound to the north by West Teel Road and Maricopa Casa Grande Highway, on the south by Ash Avenue, on the west by Russell Road and on the east by Montgomery Road, as illustrated in Figure 1. Table 1 presents the Townships, Ranges and Sections of the Gila and Salt River Baseline and Meridian that are encompassed by the Legends property.

TABLE 1
PROJECT LOCATION

Township	Range	Sections
T6S	R4E	1,12, 13, and 23-26
T6S	R5E	5,6,7,8,17,18, 19, 20, 21, 22, and 27-30

1.3 Land Use

Legends is a mixed-use master planned community that includes open-space, single and multi-family residential units, schools, community parks, commercial parcels and golf course, as shown in Figure 2. The land use plan for Legends is also presented in tabular format in Appendix B (Table 2). The Legends development will include approximately 21,740 dwelling units, 11 schools, approximately 1,424 acres of parks and open spaces, and over 600 acres of commercial development.

1.4 Topography

The topographic data used for the basis of design was obtained from MapMart at 1-foot intervals. In order to maintain a common coordinate system for this Project, the horizontal coordinate system of the MapMart topography data was converted to the State Plane, North American Vertical Datum of 1983 (NAVD 83), Arizona Central, US Feet and the vertical system was converted to National Geodetic Vertical Datum of 1929 (NGVD 29), US Feet.

The topographic data shows that the property has a high elevation of approximately 1,348 feet above mean sea level (amsl) at the southeast corner of

the project and a low elevation of approximately 1,299 feet amsl near the Santa Cruz wash. The local topography is generally flat with a divergent, gentle slope to northwest across the property.

1.5 Service Provider

Currently, a portion of Legends is within the existing service area of CP Water Company, Francisco Grande and Arizona Water Company. The area south of Arizona Highway 84 between Montgomery Road and Midway Road will be served by Arizona Water Company and will have its own separate water system. However, Global Water - Santa Cruz Water Company, LLC (Global) or its subsidiary will serve as the water service provider for the remaining Legends development. Global is also in the process of filing an application with the Arizona Corporation Commission (ACC) to secure the Certificate of Convenience and Necessity (CC&N) for the area, which includes Legends.

1.6 Purpose

The Legends Master Water Report reflects the current land plan and the associated water system infrastructure needed to support this land plan. The purpose of this Master Water Report is to provide a basic conceptual design of the property's proposed water distribution system. This Master Water Report is also intended to provide a general overall water concept, establish design guidelines and become the basis for more detailed studies as the design of the development continues. The proposed water system is modeled as a "stand alone" system and does not consider demands from adjacent and/or off-site properties.

The Master Water Report described herein is in accordance with the design criteria specified by Global and the infrastructure system proposed in the Water Master Plan-Santa Cruz Water Company Southeastern Service Area (Area Water Plan), prepared by David Evan and Associates Inc., dated May 2006.

1.7 Phasing

Legends is planned to be developed in three main phases: Phases A, B and C. Each of these phases is further phased in to sub-phases as illustrated in Figure 3.

On-site phasing will dictate the construction sequence and timing of groundwater wells, water storage tanks, water transmission lines and booster pump stations (BPS). The final design, location and construction sequence of water system improvements will be defined and implemented in each project phase concurrent with the preliminary plat submittals through the development of Phasing Unit Water System Reports. The Water System Reports will also include water system improvements outside the phase boundaries that are required to provide adequate water service. It will also address significant changes in water demands for the current and prior Phasing Units, which may occur as development progresses. Phasing Unit Water System Reports shall generally

conform to the Master Water Report or an amendment to the Master Water Report shall be submitted and approved. A registered professional engineer, licensed to practice in the State of Arizona, will prepare each Phasing Unit Water System Plan.

2.0 POPULATION PROJECTION

The onsite population projections for Legends are based on the land use plan presented in Figure 2 and are detailed in Appendix B (Table 2). Residential parcels with densities greater than or equal to 6 dwelling units (DU) per acre were assumed to have a population density of 2.0 persons per dwelling unit (persons per DU) and residential parcels with densities less than 6 DU per acre were assumed to have population densities of 2.6 persons per DU.

Using these assumptions, populations were determined for each parcel and the results are summarized in Table 3. Detailed breakdowns of the population projections for each parcel can be found in Table 2 (Appendix B). As noted, the area south of Arizona Highway 84 between Montgomery Road and Midway Road will be served by Arizona Water Company and will have its own separate water system. The total projected population for the remaining Legends development is 51,335 persons.

TABLE 3
POPULATION PROJECTION SUMMARY BY PHASE

Phase Description	Unit Count	Residential Population
Phase A		
Phase A-Sub Phase 1	2,411	5,900
Phase A-Sub Phase 2	2,760	6,624
Phase A-Sub Phase 3	2,245	4,491
Phase A Subtotal	**7,417**	**17,015**
Phase B		
Phase B-Sub Phase 1	2,023	5,186
Phase B-Sub Phase 2	3,609	8,770
Phase B Subtotal	**5,632**	**13,956**
Phase C		
Phase C-Sub Phase 1	5,305	12,128
Phase C-Sub Phase 2	3,386	8,237
Phase C Subtotal	**8,691**	**20,364**
Total	**21,739**	**51,335**

Notes:

Population Densities:

Low Density (LDR/MDR)	Density < 6	2.6 persons/DU
High Density (MDR-2,HDR)	Density ≥ 6	2.0 persons/DU
Active Adult		2.0 persons/DU

3.0 MASTER WATER REPORT

3.1 Design Criteria

D.R. Horton, the developer, is currently negotiating with Global for it or its subsidiary to provide water services to the Project. Hence, the water system infrastructure for the Project was designed in accordance with the design criteria established by Global. The design criteria are listed in Table 4.

TABLE 4
WATER DEMAND DESIGN CRITERIA

Category	Criteria	Units
Water Demand		
HDR	192	gpd/DU
LDR	250	gpd/DU
School	50	gpd/stu
Open Space	1,800	gpad
Commercial/MU/NC/Clubhouse	2,800	gpad
Peaking Factors		
Maximum Day/Average Day	1.98	
Peak Hour/Maximum Day	1.70	
Average Day		
Minimum Pressure	40	psi
Maximum Pressure	80	psi
Maximum Day		
Minimum Pressure	40	psi
Maximum Pressure	80	psi
Maximum Velocity	5	fps
Maximum Headloss	6	ft/1,000 ft
Peak Hour		
Minimum Pressure	40	psi
Maximum Pressure	80	psi
Maximum Velocity	6	fps
Maximum Headloss	8	ft/1,000 ft
Maximum Day + Fire Flow		
Minimum Pressure	20	psi
Maximum Velocity	8	fps
Residential Fire Flow	1,000	gpm
Non-residential Fire Flow	1,500	gpm
Storage Requirement		
30% of maximum day demand + fire flow storage		
Booster Pump Station Capacity Requirement		
Greater of peak hour demand and maximum day + fire flow demand		
Well Requirement		
Meets maximum day demand with one well out of service		
Minimum Pipe Diameter	8	inches
Hazen Williams 'C' Factor	130	

Notes:
1. The pressure in the distribution system shall not exceed 80 psi. Pressure-reducing valves (PRVs) may be utilized on individual lot water services if the pressure exceeds 80 psi.
2. Ultimately, the water demands for the parks, lakes and golf courses are assumed to be met via a reclaimed water system. This system will be analyzed separately. Additional (non-irrigation) water demands for the golf courses were assumed to draw water from the potable water distribution system at the associated clubhouses, which were treated as commercial parcels.
3. Per Global, the pipes adjacent to non-residential parcels will be 12-inch or larger in size.

3.2 Water Demands

Based on the preceding criteria and the land use data for the Project (as listed in Appendix B), the system demands for each Phase was calculated and applied to selected demand nodes in the hydraulic model. The water demands are summarized in Table 5. Tables 6a and 6b (Appendix B) present detailed water demand calculations for build-out and Phase A. As noted, the portion of area served by Arizona Water Company will have its own water system and was not included in this analysis.

Ultimately, the water demands for the parks, golf courses and open spaces will be met via reclaimed water. During the initial phases of the Project, there may not be sufficient treated effluent to service the golf courses, parks and open spaces planned in the early stages of development. Hence, potable wells will be utilized to offset insufficient treated effluent required initially for open spaces. As detailed information becomes available on open spaces at the Preliminary Plat level, the water system infrastructure may be adjusted to meet these demands.

TABLE 5 WATER DEMAND SUMMARY BY PHASE					
Phase Description	**Unit Count**	**Residential Population**	**Average Day Demand (MGD)**	**Maximum Day Demand (MGD)**	**Peak Hour Demand (MGD)**
Phase A					
Phase A-Sub Phase 1	2,411	5,900	1.16	2.29	3.90
Phase A-Sub Phase 2	2,760	6,624	0.81	1.61	2.73
Phase A-Sub Phase 3	2,245	4,491	0.64	1.26	2.14
Phase A Subtotal	**7,417**	**17,015**	**2.61**	**5.16**	**8.77**
Phase B					
Phase B-Sub Phase 1	2,023	5,186	0.57	1.13	1.91
Phase B-Sub Phase 2	3,609	8,770	1.16	2.29	3.90
Phase B Subtotal	**5,632**	**13,956**	**1.73**	**3.42**	**5.81**
Phase C					
Phase C-Sub Phase 1	5,305	12,128	1.79	3.55	6.04
Phase C-Sub Phase 2	3,386	8,237	1.63	3.23	5.50
Phase C Subtotal	**8,691**	**20,364**	**3.43**	**6.79**	**11.54**
Project Total	**21,739**	**51,335**	**7.76**	**15.37**	**26.12**

Notes

1. Flow Rates:

Residential	250	gpd/DU
Commercial/Mixed Use/Clubhouse	2,800	gpd/ac
Park and Open Space	1,800	gpd/ac
School	50	gpd/stu

2. School – No. of Students (assumed):

Elementary School	750	Students
Middle School	1,000	Students
High School	1,500	Students

3. Peaking Factors:

Maximum day demand = 1.98 x average day demand

Peak hour demand = 1.70 x maximum day demand

4. The water demands from the area south of Arizona Highway 84 between Montgomery Road and Midway Road is not included in the analysis. As noted, this area will be served by Arizona Water Company and will have its own separate water system.

3.3 Existing Water System Infrastructure

As the majority of the area is undeveloped native rangeland, water system infrastructure currently does not exist for the Legends area. As noted, Global or its subsidiary is planned to be the water provider for the Legends master planned community. Global is in the process of filing an application with ACC to secure a CC&N to establish a private utility service area. Legends is included in the service area proposed as part of this CC&N application.

3.4 Modeling

As noted, the water system infrastructure for the Legends project will be designed based on Global's design criteria presented in Table 4 (Section 3.1). The water system will include groundwater wells, BPSs, storage tanks and transmission/distribution mains.

The proposed water system was modeled using WaterCAD version 8.0 by Bentley Systems, Inc. The model includes water storage reservoirs to represent water campuses and pumping facilities, the main water lines in arterial and collector roads and demand nodes for each Parcel. The water demand is calculated for each parcel according to its anticipated population and the demand criteria listed in Section 3.1. The demand nodes were located at high points to verify that the minimum pressure criteria can be met. A Hazen-Williams 'C' factor of 130 was used in the model to ensure that the system functions under foreseeable conditions.

Five scenarios were modeled: average day, maximum day, peak hour, and maximum day plus fire flow demands (residential and commercial). The hydraulic grade lines (HGL) of the reservoirs in the model were obtained from the Area Water Plan. Per Global, the Legends development will be served by two water campuses. The first water campus is proposed onsite and will be located at the intersection of Clayton Road and Russell Road. The Legends Ranch Water Campus (LR WC) will meet the initial Phase A water demands of the Legends project. A 24-inch water main from the LR WC will feed the various distribution lines within the parcels. Ultimately, an offsite water campus located northwest of the site, Solana Ranch Water Campus (SR WC), will be connected to the Legends water system to supplement the water demands and meet the water system infrastructure requirement. Based on these assumptions, two different models are created to analyze the different development conditions-Ultimate Build-out and Phase A. As noted, the area served by Arizona Water Company was not included in this analysis. This area will be served by an independent water system. The models are presented in Figures 4a and 4b (Appendix A).

The fire flows were applied to various nodes in the system to confirm the system capability to meet the minimum pressure requirements. The nodes that were selected for the fire flow analysis were either the farthest point in the system or the anticipated large non-residential demands, such as schools and commercial developments.

3.5 Topography and Pressure Zones

The property has an approximate high elevation of 1,348-feet amsl at the southeast corner of the Project and a low elevation of approximately 1,299 feet amsl near the Santa Cruz wash, resulting in an elevation change of approximately 49 feet across its boundary. For modeling purposes, the pressure zones established in the Area Water Study are utilized. Based on the study, the entire

Legends development lies in one pressure zone, Pressure Zone C. The HGL for Pressure Zone C was estimated to be 1,480 feet.

3.6 Groundwater Wells

The water system infrastructure assumes the development of groundwater wells located at selected well sites within the Project boundary. Clear Creek and Associates have prepared the hydrogeologic study for the entire service area for Global. Global shall identify well sites to be transferred from D. R. Horton to Global. A detailed well siting investigation will be required to locate the proposed groundwater wells and estimate the anticipated flow rates and water quality.

Groundwater production wells are required to provide an adequate amount of water to meet the maximum day demand with one well out of service. Groundwater wells are assumed to use an 18-hour pumping cycle time to meet the maximum day demand. The number of wells needed to achieve this goal will be refined as test wells are drilled and/or as production wells are put into operation. Per Global's direction, the average production rate for each well is assumed to be 1,500 gallons per minute (gpm). The production rate for each well with an 18-hour pumping cycle time is 1,125 gpm.

The estimated maximum day demand for the Legends development at build-out is 15.37 MGD or 10,674 gpm as summarized in Table 5. The maximum day demand is calculated based on the design criteria presented in Section 3.1 of this report. Assuming each well produces 1,125 gpm over 18-hours of operation, the Legends development will require approximately 10 groundwater wells. In addition, a back-up well will be provided resulting in a total of approximately 11 groundwater wells.

A detailed well site investigation will be required to locate the proposed groundwater wells and estimate the anticipated flow rates and water quality. The well transmission system will be modeled with subsequent Phasing Unit Water System Reports. Upon drilling and sampling of new wells, the need for water treatment will be evaluated and incorporated as appropriate to meet the requirements of the Safe Drinking Water Act.

3.7 Water Storage Tanks

The storage volume required for the Project area is calculated as 30% of maximum day demand plus fire flow storage (3 hours of fire flow reserve). One fire flow storage volume is assumed for each phase. The storage volume required for the development is summarized in Table 7. The storage volume required for the area served by Arizona Water Company is not included in the storage volume presented in Table 7.

The storage tanks will fill from the groundwater production wells during times of low system demands and will drain to the system during high demand conditions.

TABLE 7 STORAGE VOLUME REQUIREMENT						
Phase Description	**Unit Count**	**Residential Population**	**Maximum Day Demand (MGD)**	**30% of Maximum Day Demand (MG)**	**Fire Storage (MG)**	**Total Storage (MG)**
Phase A	7,417	17,015	5.16	1.55	0.27	1.82
Phase B	5,632	13,956	3.42	1.03	0.27	1.30
Phase C	8,691	20,364	6.79	2.04	0.27	2.31
Total	**21,739**	**51,335**	**15.37**	**4.62**	**-**	**5.43**

Notes
1. One fire flow was assumed per phase.
2. A fire flow of 1,500 gpm for 3 hours was used to determine the fire flow storage.
3. Storage = 30% of Maximum Day Demand + FF (1,500 gpm for 3 hours)

3.8 Water Campus

As noted, two water campuses are proposed for the Legends water distribution system; one within Legends (LR WC) at the intersection of Russell Road and Clayton Road and one at the Solana Ranch development (northwest of the Project). During the initial phase, the LR WC will serve the Project area. However, the two campuses will ultimately serve the Project to meet the water system requirement at the build-out condition.

The location of the two water campuses is shown in Figure 4a (Appendix A).

3.9 Booster Pump Station

Booster pump stations shall be designed to maintain adequate pressure in the system during domestic and fire flow scenarios. The design of the BPS will be presented in subsequent studies along with more detailed land planning.

Per Global, the booster pump capacity is the greater of peak hour demand and maximum day plus fire flow demand. The peak hour and maximum day plus fire flow demands for the Project are 26.12 MGD (18,139 gpm) and 17.53 MGD (12,174 gpm) respectively. Therefore, the BPS is designed based on the maximum day plus fire flow demand and will have a capacity of 18,139 gpm.

3.10 Transmission/Distribution Network

The water distribution network for the Legends Development, as shown in Figures 4a and 4b, is modeled as distribution lines aligned in the major arterial and collector streets, demand nodes within each parcel and reservoirs as water campuses. Excluding the first pipe from the reservoir to the distribution system, the distribution network varies in size from 8-inch to 24-inch diameter water mains. The completed water system at build-out will include the backbone pipe network and water lines looped through each parcel of development.

The water transmission system will be developed and modeled once well siting studies have been conducted.

4.0 REGULATORY PERMITS

Several regulatory permits and consideration will be required in the implementation of the water system. As noted, Global or its subsidiary will be the water provider for the Legends project area. Global is currently in the process of filing a CC&N application with ACC. The service area proposed in this CC&N application includes the Legends development. The developer and Global will coordinate efforts in obtaining necessary permits to serve the Legends development.

5.0 SYSTEM MODEL AND RESULTS

The proposed water distribution systems (Build-out and Phase A) for Legends are shown in Figures 4a and 4b. The five scenarios studied with the hydraulic model include: average day, maximum day, peak hour and maximum day plus fire flow demands (residential and commercial).

In order for the proposed water systems to meet the water demands and the set design criteria, some of the pipes shown in the Area Water Plan were upsized particularly along Indian Valley Road between Barnes Road and Clayton Road and along Clayton Road between Russell Road and Indian Valley Road. With these modifications, the proposed water distribution systems meet the specified minimum pressure and headloss requirements. However, during the peak hour scenario at build-out, the velocities in a few pipes were above 6 feet/second (fps). The pipes that experienced slightly high velocities were the first few points of delivery from the reservoir to the system. In addition, the pressures in a few junctions were above 80 psi. These junctions are offsite junctions. The installation of additional water system facilities and pipe networks will help regulate system velocities and pressures. In addition, as the final land use plan and lot layout is incorporated, demands will be further distributed among various nodes in the proposed water system, decreasing the velocity and pressure in the system.

The proposed water systems meet the residual pressure requirement of 20 psi for the fire flow condition.

The hydraulic model output tables are located in Appendix C. Figures 4a and 4b display the pipe layout and resulting pipe sizes. The results for the scenarios modeled are summarized in Table 8 for the ultimate system.

TABLE 8 SUMMARY OF HYDRAULIC MODEL RESULTS ULTIMATE SYSTEM										
Design Constraint	Average Day		Maximum Day		Peak Hour		MD+FF (Residential)		MD+ FF (Comm.) at J-A-4&5	
	Value	Location	Value	Location	Value	Location	Value	Location	Value	Location
Minimum Pressure (psi)	59.8	J-50	54.9	J-A-50-AA	42.6	J-A-47-AA	43.1	J-202	52.9	J-50
Maximum Pressure (psi)	83.8	J-225	83.7	J-225	83.7	J-225	83.	J-225	83.7	J-225
Maximum Velocity (fps)	2.12	P-237	4.20	P-237	7.15	P-237	7.98	P-328	4.79	P-237
Maximum Headloss (ft/1000 ft of pipe)	0.66	P-237	2.34	P-237	6.25	P-237	-	-	2.98	P-237

Notes:
1. Appendix C includes detailed hydraulic model results for the ultimate water system and Phase A2 water system.
2. During the peak hour scenario, the velocities in a few pipes were above 6 fps. With the installation of additional water system facilities and further distribution of the demands, the velocity in the system will decrease to acceptable levels.

6.0 CONCLUSIONS

This report provides conceptual locations and sizes of the proposed infrastructure required to serve the Legends development. The water system, as designed and presented herein, meets the design parameters established for this system.

- The Legends water distribution system has been analyzed as a stand-alone system in this Master Water Report. The entire project area falls in one pressure zone, Pressure Zone C, as identified in the Area Water Plan. The HGLs for the water campuses (modeled as reservoir) are obtained from the Area Water Plan. The proposed water systems meet the design parameters as noted within this study.

- A total of two water campuses are proposed for the Legends water distribution system. The onsite water campus, LR WC, will serve the initial phases of the Legends development. Ultimately, an offsite water campus at Solana Ranch will supplement the existing onsite water campus to meet the water demands required by Legends for the build-out condition.

- For the water supply, total of 11 groundwater wells will be required to serve Legends.

- A storage volume of approximately 5.43 MG is estimated for the Legends development. In addition, the calculated capacity of the BPS for the Legends development is 18,139 gpm.

- The proposed water systems meet the minimum pressure and headloss requirements for all scenarios.

- Velocities in a few pipes were above 6 feet per second (fps) during the peak hour demands scenario. With the installation of additional facilities and further distribution of the demands, the velocities in the system will decrease to acceptable levels.

- The pressures in a few junctions were above 80 psi. These junctions are offsite junctions. The installation of additional water system facilities and pipe networks will help regulate system velocities and pressures

- A Phasing Unit Water System Report will be developed for each project phase to evaluate and incorporate more detailed topographic data, land planning, and the sequence of development. The Master Water Report needs to be updated if it differs significantly from the Phasing Unit Water System Plans.

7.0 REFERENCES

Global Water Resources, L.L.C. (Rev. July 2005). *Standards for the Planning, Design and Construction of Water and Wastewater Systems*, Phoenix, Arizona.

David Evans and Associates, Inc. (May 2006). *Water Master Plan – Santa Cruz Water Company Southeast Service Area.* City of Maricopa, Arizona.

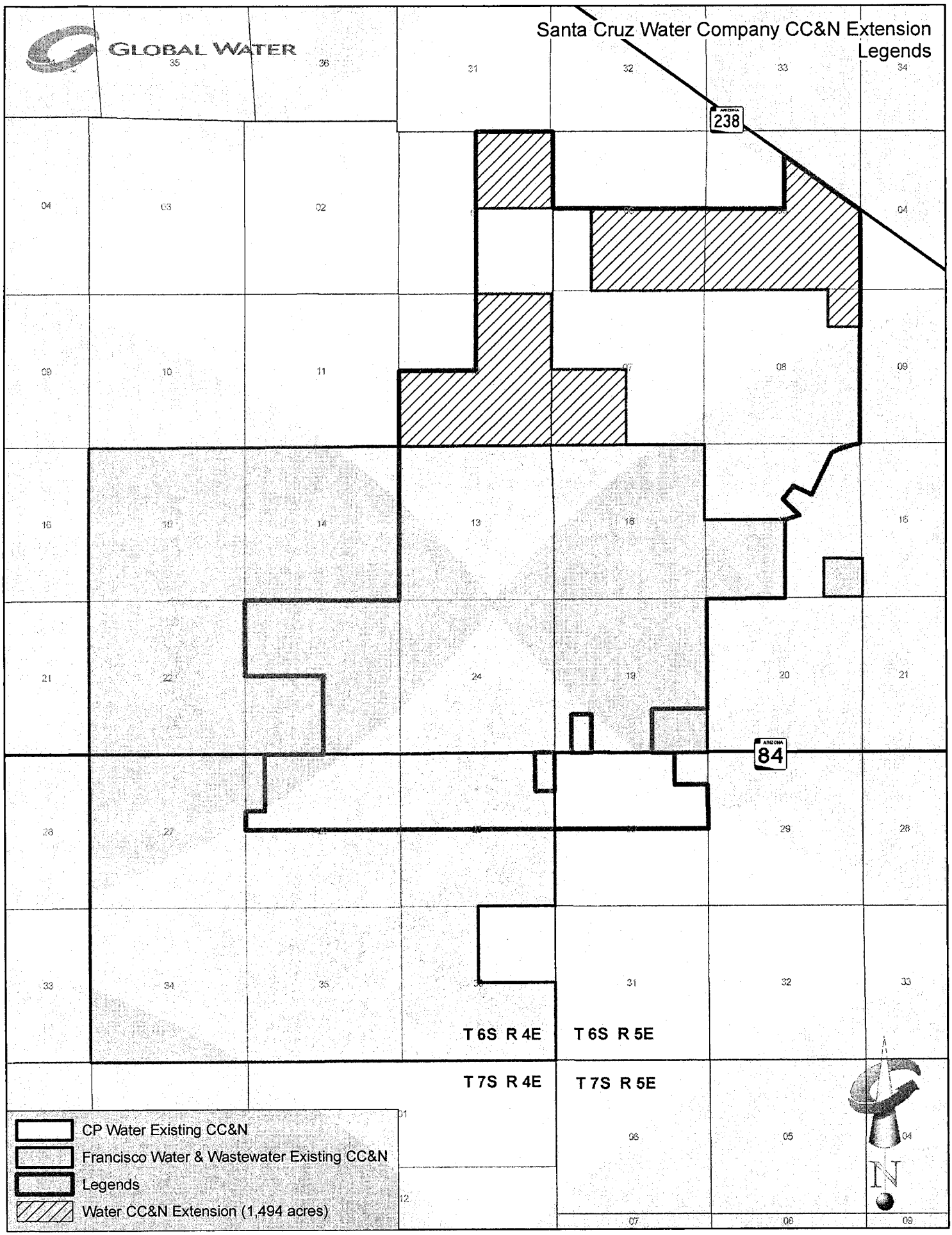
GLOBAL WATER
Santa Cruz Water Company CC&N Extension
Legends
238
84
T 6S R 4E
T 6S R 5E
T 7S R 4E
T 7S R 5E
CP Water Existing CC&N
Francisco Water & Wastewater Existing CC&N
Legends
Water CC&N Extension (1,494 acres)
N

© Copyright, CMX 2006 - This plan document set is the sole property of CMX. No alterations to these plans, other than adding "as-built" information, are allowed by anyone other than authorized CMX employees.

WATER SYSTEM

1. Water line sizes are based upon the approved Master Water Plan for Legends.
2. Global Water - Santa Cruz Water Company is responsible for all water line sizes 16" and larger.
3. All water lines outside the Legends project boundary are to be installed by Global Water at their expense.

LEGEND

Project Boundary

Global Responsible - Water

DR Horton Responsible - Water

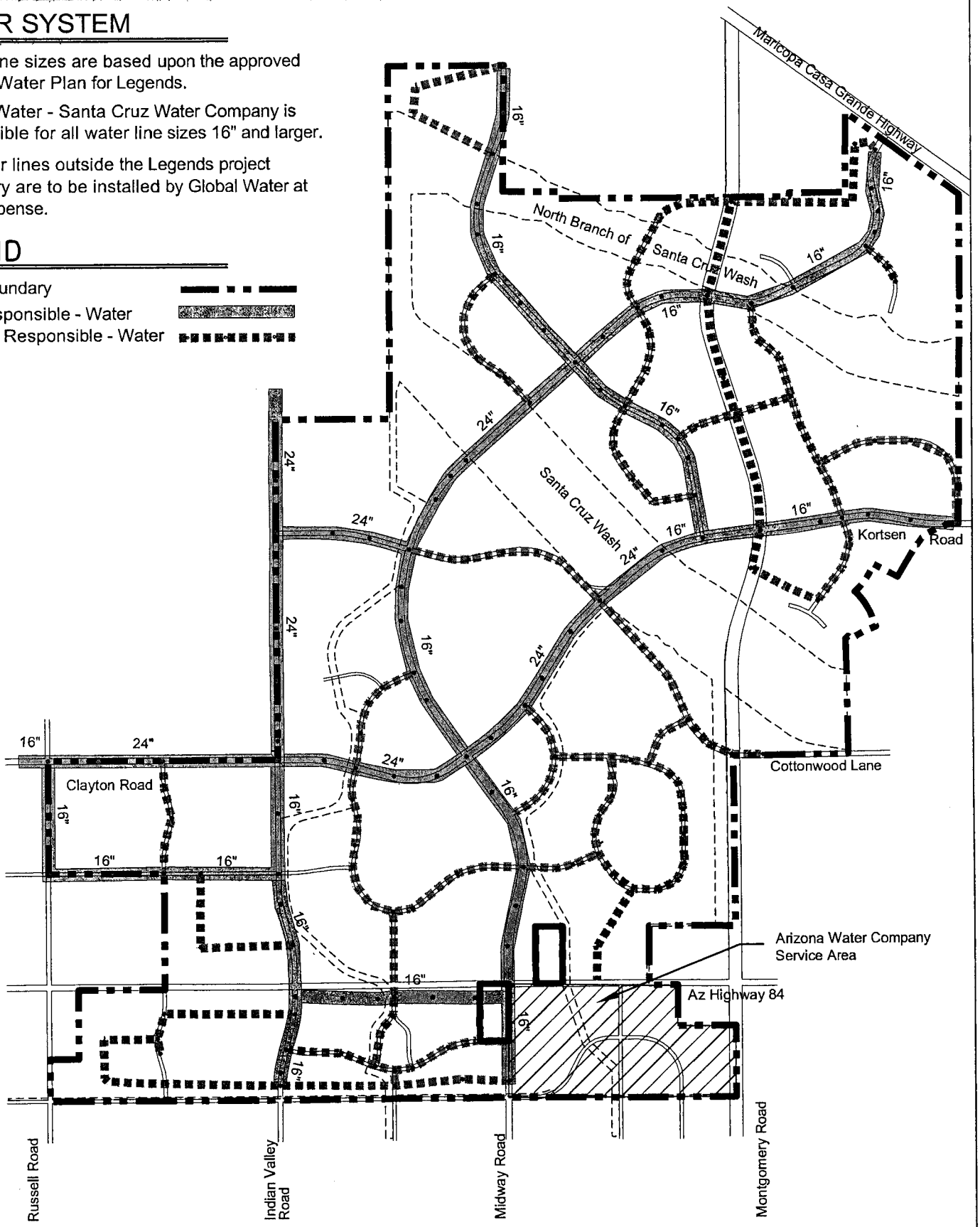

DWG. NO.	CMX PROJ: 7128	DATE: OCT.2006	SCALE: 1"=3000'
1	DESIGNED: NS	DRAWN: BC/AMP	APPROVED: AP
SHT. 1 OF 2	REV.		

LEGENDS

CASA GRANDE, ARIZONA

WATER SEGMENT RESPONSIBILITY

CMX
ENGINEERS • PLANNERS • LANDSCAPE ARCHITECTS • SURVEYORS • CONSTRUCTION MANAGERS
7740 N. 16TH ST. STE. 100
PHOENIX, AZ 85020
PHONE: (602) 567-1900
FAX: (602) 567-1901
www.cmxinc.com

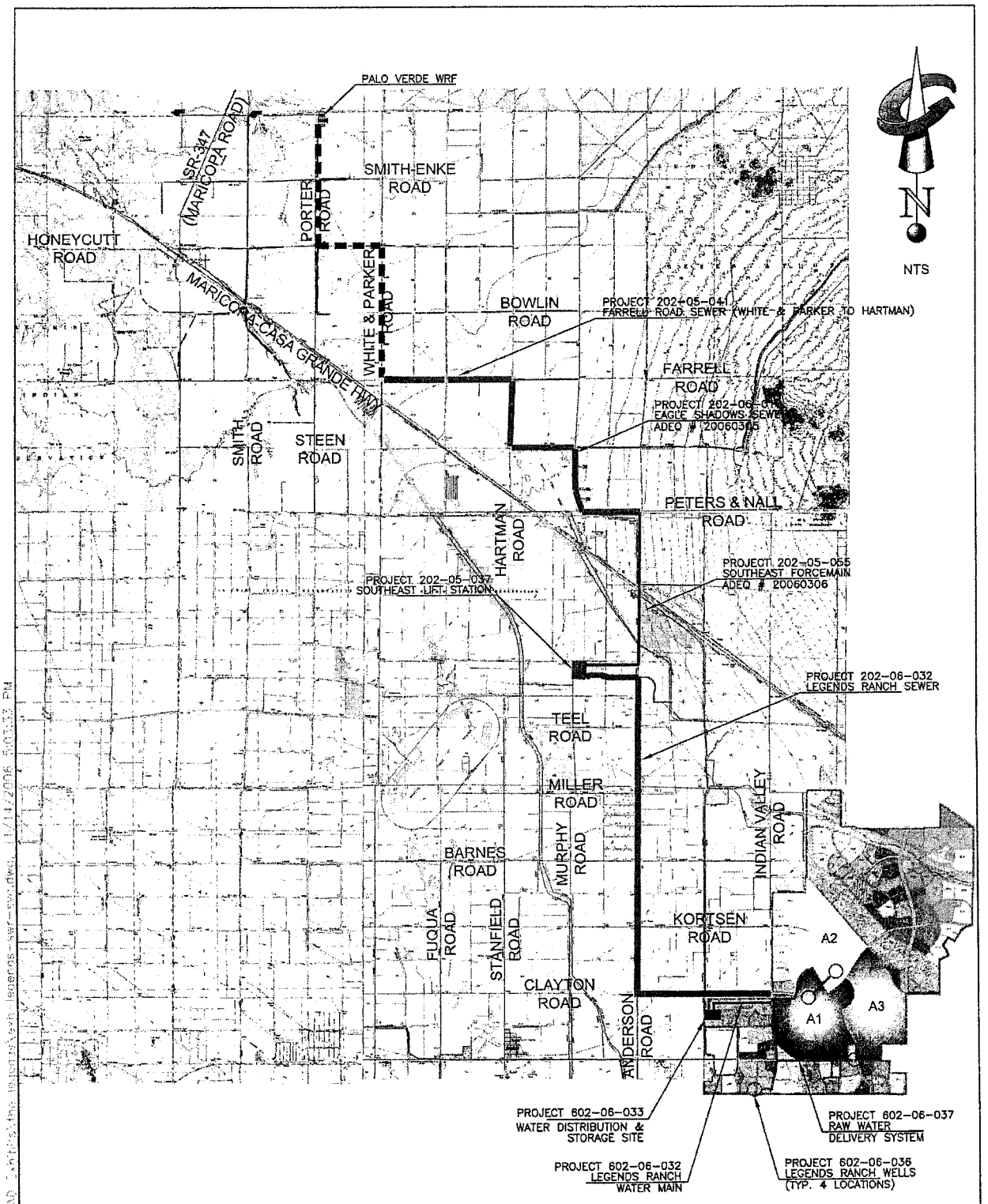

LEGEND

- PROPOSED GRAVITY SEWER
- EXISTING GRAVITY SEWER
- PROPOSED SEWER FORCE MAIN
- PROPOSED RAW WATER
- PROPOSED POTABLE WATER

GLOBAL WATER
RELIABLE · RENEWABLE · REUSABLE
21410 N. 19th Ave. · Ste. 201 · Phoenix, AZ 85027
Ph: 623.580.9600 · Fx: 623.580.9659
www.gwresources.com

Global Water - Palo Verde Utility Company
Global Water - Santa Cruz Water Company
Legends Ranch CAPEX

Drawn By: BB	Date: 11/06	Sheet: 1 OF 1	
App'vd By: SL	Date: 11/06	Drawing Number: EXH-01	
Scale: NTS			

SOUTH PROPERTY LINE CURVE DATA						
NO.	RADIUS	ARC	DELTA	TANGENT	CHORD	CHORD- BEARING
1	1200.00	1509.12	072°03'20"	872.74	1411.52	S72°20'24.0"W

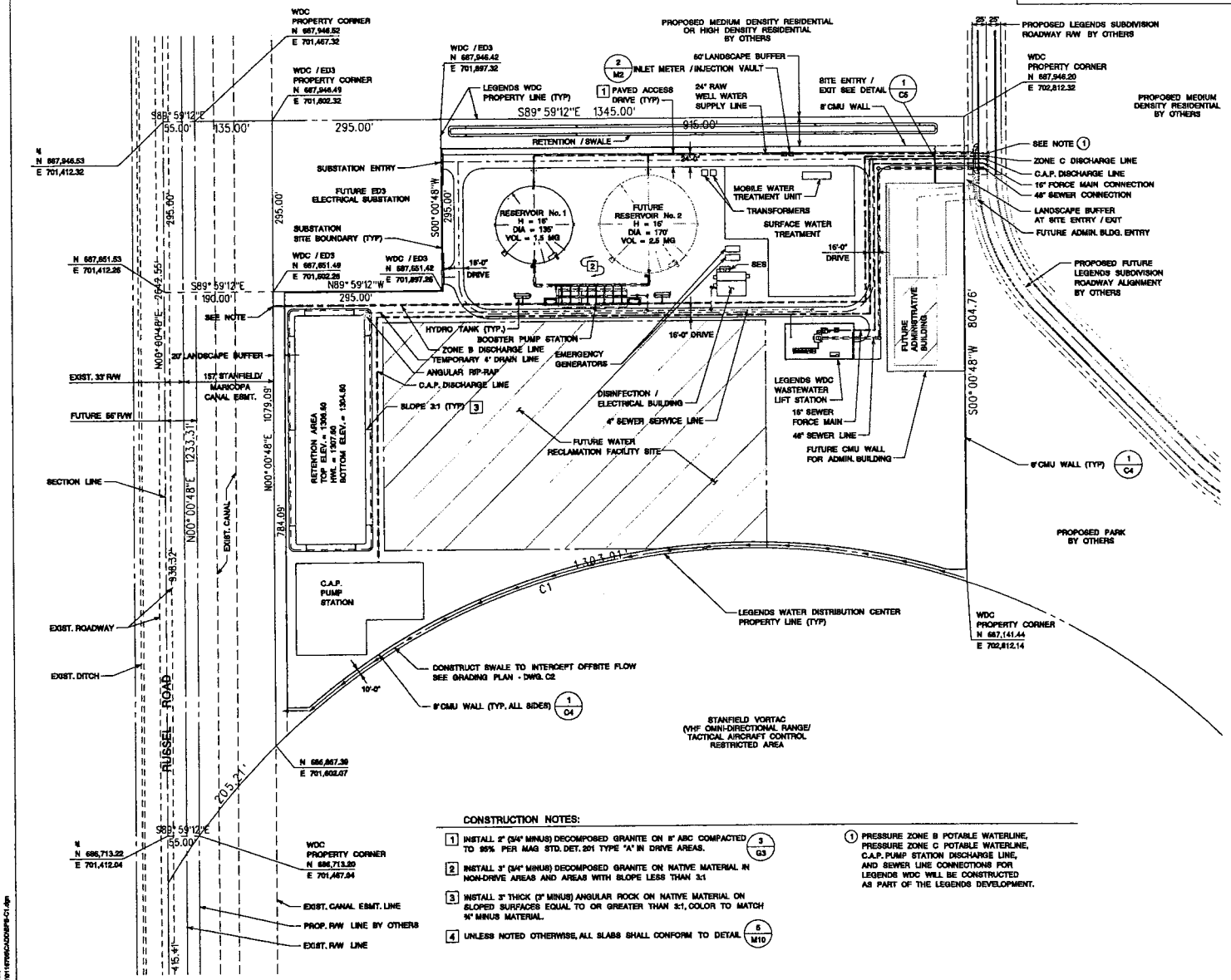

CONSTRUCTION NOTES:

1. INSTALL 2" (3/4" MINUS) DECOMPOSED GRANITE ON 6" ABC COMPACTED TO 95% PER MAG STD. DET. 201 TYPE "A" IN DRIVE AREAS. (3/G3)
2. INSTALL 3" (3/4" MINUS) DECOMPOSED GRANITE ON NATIVE MATERIAL IN NON-DRIVE AREAS AND AREAS WITH SLOPE LESS THAN 3:1
3. INSTALL 3" THICK (3" MINUS) ANGULAR ROCK ON NATIVE MATERIAL ON SLOPED SURFACES EQUAL TO OR GREATER THAN 3:1, COLOR TO MATCH 34" MINUS MATERIAL.
4. UNLESS NOTED OTHERWISE, ALL SLABS SHALL CONFORM TO DETAIL (5/M10)

(1) PRESSURE ZONE B POTABLE WATERLINE, PRESSURE ZONE C POTABLE WATERLINE, C.A.P. PUMP STATION DISCHARGE LINE, AND SEWER LINE CONNECTIONS FOR LEGENDS WDC WILL BE CONSTRUCTED AS PART OF THE LEGENDS DEVELOPMENT.

STORM WATER RETENTION CALCULATIONS
GROSS SITE AREA = 1,063,079 S.F. (24.4 AC. ±)
NET SITE AREA = 892,099 S.F. (20.5 AC. ±)
VOLUME REQUIRED = 142,141 C.F.
VOLUME PROVIDED = 158,149 C.F.

SCALE: 1" = 80'

PRELIMINARY NOT FOR CONSTRUCTION OR RECORDING

CALL FOR THE ALL PLACE 602-263-1100 1-800-STAKE-IT Survey Services Inquiry

CVL
4500 North 12th Street
Phoenix, Arizona 85014
Telephone 602-264-6831
http://www.cvlci.com

NO.	REVISION	DATE

Coe & Van Loo Consultants, Inc.

GLOBAL WATER - SANTA CRUZ WATER COMPANY, LLC
LEGENDS WATER DISTRIBUTION CENTER

SITE PLAN

PRELIMINARY NOT FOR CONSTRUCTION

DRAWING C1

CVL Contact: BRAD RICHARDS
CVL Project #: 1.01.0116705
CVL File #:

OVERALL CONST. DOC.# (4 OF 73)

VALENTINE
Environmental Engineers, LLC

4530 East Muirwood Drive, Suite 113 Phoenix, AZ 85048-7693 Office: (480) 283-8991 Fax: (480) 283-0082 Web: http//www.veeaz.com

LETTER OF TRANSMITTAL

DATE: August 13, 2007

TO: Timothy J. Sabo
Roshka DeWulf & Patten, PLC
One Arizona Center
400 East Van Buren, Suite 800
Phoenix, Arizona 85004

Cc: Robin Bain, P.E., DEE without attachments

SUBJECT: Southeast Lift Station Drawing Set

VIA: Mail _____ Delivery ___X___ Other _____

Remarks:

Item	Qty	Description
1	1	11 X 17 set of Drawings for the Southeast Lift Station project

Message:

Dear Timothy,

Please see the attached 11 X 17 set of Drawings for the Southeast Lift Station project that Valentine Environmental Engineers, LLC has prepared for Robin Bain of Global Water to approve. She has asked that we send this Drawing set directly to you.

Thank you,

Michael Valentine, P.E.
Valentine Environmental Engineers, LLC

AUG 2007
RECEIVED
TJS

GLOBAL WATER
RELIABLE. RENEWABLE. REUSABLE.

GLOBAL WATER
SANTA CRUZ WATER COMPANY, INC
LEGENDS WATER DISTRIBUTION CENTER

SOUTHEAST LIFT STATION

JULY 2007
VOLUME 3 OF 3

GLOBAL WATER PALO VERDE UTILITY CO.
21410 NORTH 19TH AVENUE
SUITE 201
PHOENIX, ARIZONA 85027

VALENTINE
ENVIRONMENTAL ENGINEERS LLC
4530 East Muirwood Drive, Suite 113 Phoenix, Arizona 85048-7693
Phone: (480) 283 - 8991 Fax: (480) 283 - 0082

BENCHMARK:

NGS PID CZ2284, DESIGNATION X 43
FOUND 3 1/2 CORPS OF ENGINEERS BRASS CAP FLUSH IN CONCRETE APPROXIMATELY 135 SOUTHWEST OF THE INTERSECTION OF MONTGOMERY AND CLAYTON ROADS

ELEVATION = 1330.94 (NAVD 88)

BASIS OF BEARINGS:

THE EAST LINE OF THE SOUTHEAST QUARTER OF SECTION 24, T. 6 S, R. 4 E SOUTH 00 DEGREES 09 MINUTES 39 SECONDS WEST

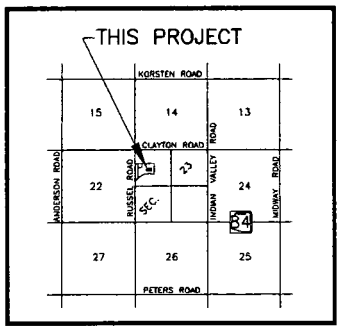

VICINITY MAP
NOT TO SCALE

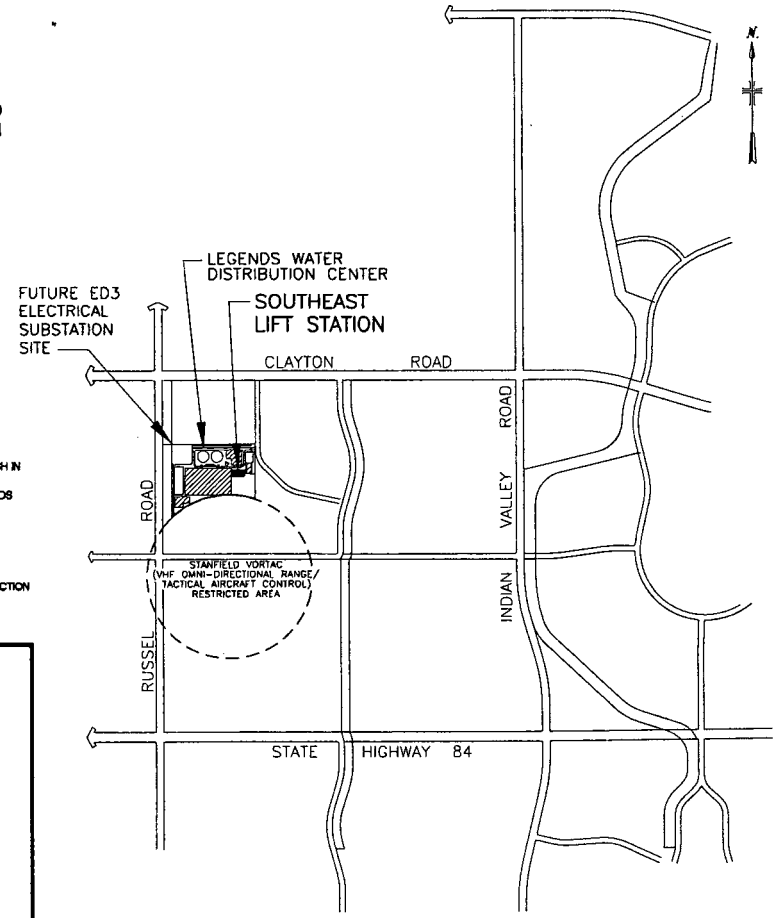

LOCATION MAP
NOT TO SCALE

PRELIMINARY
NOT FOR CONSTRUCTION 7-27-07

SOUTHEAST LIFT STATION

GLOBAL WATER GENERAL WATER NOTES:

1. FINAL ACCEPTANCE OF UNDERGROUND FACILITIES BY GLOBAL WATER RESOURCES SHALL BE IN ACCORDANCE WITH GLOBAL WATER RESOURCES CODE OF PRACTICE GWR-CP-01-008, LATEST REVISION.

2. IT SHALL BE THE CONTRACTOR'S SOLE RESPONSIBILITY TO VERIFY THE PRESENCE AND LOCATION OF ANY AND ALL EXISTING OVERHEAD AND/OR UNDERGROUND UTILITIES THAT MAY INTERFERE WITH THIS CONSTRUCTION, WHETHER OR NOT SAID UTILITIES ARE SHOWN ON THE CONSTRUCTION PLANS FOR THIS PROJECT. CONTRACTOR SHALL ADEQUATELY PROTECT AND MAINTAIN SUCH UTILITIES AND OBSERVE ALL POSSIBLE PRECAUTIONS TO AVOID ANY DAMAGE TO THESE FACILITIES.

3. IT SHALL BE THE CONTRACTOR'S RESPONSIBILITY TO UNCOVER ALL EXISTING WATER LINES BEING CONNECTED TO, AND TO VERIFY THE LOCATION, DEPTH, AND SIZE OF PIPE, BEFORE ANY CONSTRUCTION BEGINS.

4. IT SHALL BE THE CONTRACTOR'S RESPONSIBILITY TO COORDINATE WITH THE ENGINEER OF RECORD OR SURVEYOR, AND PROVIDE SUFFICIENT TIME FOR SAID ENGINEER OF RECORD OR SURVEYOR TO LOCATE ALL FACILITIES FOR AS-BUILT PURPOSES. ALL HORIZONTAL BENDS, TEES, AND VERTICAL REALIGNMENTS MUST BE LEFT EXPOSED UNTIL SUFFICIENT AS-BUILT INFORMATION HAS BEEN OBTAINED. FINAL ACCEPTANCE OF THE WATER FACILITIES WILL NOT BE ISSUED UNTIL AS-BUILTS HAVE BEEN REVIEWED AND ACCEPTED BY GLOBAL WATER RESOURCES.

5. ANY CONSTRUCTION PERFORMED WITHOUT THE KNOWLEDGE OF THE GLOBAL WATER RESOURCES INSPECTOR OR HIS REPRESENTATIVES IS CONSIDERED A RISK, AND LIABLE FOR REMOVAL AND REPLACEMENT AT THE CONTRACTOR'S EXPENSE.

6. CONTRACTOR SHALL SCHEDULE A PRE-CONSTRUCTION MEETING AT THE JOB SITE WITH THE GLOBAL WATER RESOURCES INSPECTOR PRIOR TO START OF CONSTRUCTION AT (602) 319-9325.

7. CONTRACTOR SHALL CONTACT THE GLOBAL WATER RESOURCES INSPECTOR AT (602) 319-9325 PRIOR TO CHARGING WATER MAINS WITH POTABLE WATER FOR DISINFECTION.

8. ALL COPIES OF TEST RESULTS SHALL BE GIVEN TO THE GLOBAL WATER RESOURCES INSPECTOR.

9. REVIEW OF THESE PLANS FOR COMPLIANCE WITH THE REQUIREMENTS OF GLOBAL WATER RESOURCES SHALL NOT PREVENT ANY CORRECTION OF ERRORS FOUND TO BE IN VIOLATION OF ANY APPLICABLE STANDARD OF GLOBAL WATER RESOURCES.

10. ALLOWABLE PIPE DEFLECTIONS FOR PVC AND DIP:

TYPE	SIZE	MAX. JOINT DEFLECTION MAX.	OFFSET PER JOINT	MIN. RADIUS
PVC	8"-12"*	N/A	N/A	300 FEET
PVC	14"-24"	1.5 DEGREES	6.25 INCHES	764 FEET
DIP	8"-12"	2.5 DEGREES	9.4 INCHES	413 FEET
DIP	14"-16"	2.0 DEGREES	7.5 INCHES	516 FEET
DIP	18"-24"	1.5 DEGREES	5.7 INCHES	688 FEET

*NOTE: DEFLECTION AT THE JOINT ON PVC WATER MAINS 12 INCHES OR LESS IS NOT ALLOWED. THE CURVE SHALL BE ACCOMPLISHED BY BENDING THE PIPE RATHER THAN DEFLECTING THE JOINTS. THERE SHALL BE NO DEFLECTION IN THE JOINTS. THERE SHALL BE NO DEFLECTION IN THE JOINTS UPON COMPLETION TO AVOID UNDER STRESSING.

11. ALL WATER LINES MUST BE DISINFECTED PER ADEQ ENGINEERING BULLETIN #8 OR AWWA C651-86. RESULTS ARE TO BE GIVEN, IN WRITING, TO GLOBAL WATER RESOURCES.

12. ALL BENDS AND FITTINGS SHALL BE MECHANICAL JOINT IN ACCORDANCE WITH AWWA C111 AND MAG SECTION 750.4. JOINT RESTRAINTS SHALL BE FIELD LOK 350 GASKET JOINT RESTRAINT OR MEG-A-LUG WITH LENGTHS IN ACCORDANCE WITH MAG 303-1&2. CONCRETE THRUST BLOCKS AS A SUBSTITUTE FOR RESTRAINED JOINTS ARE NOT ACCEPTABLE.

13. ALL SERVICE SADDLES FOR PVC PIPE SHALL BE WIDE-STRAP FULL CIRCLE BRONZE AS MANUFACTURED BY MUELLER CO., MODEL H-13000. MUELLER BR2B DOUBLE STRAPPED FOR DUCTILE IRON PIPE OR AN APPROVED EQUAL.

14. BACKFLOW PREVENTION ASSEMBLIES HAVE A CERTIFICATE OF APPROVAL ISSUED BY USC-FCCHR OR OTHER APPROVED CERTIFYING AGENCY IN ACCORDANCE WITH AAC-R18-4-115. ALL ASSEMBLIES SHALL BE INSTALLED IN ACCORDANCE WITH GLOBAL WATER RESOURCES STANDARD DETAILS. A CERTIFIED TEST MUST BE SUBMITTED TO GWR. ACCEPTANCE OF THE WATER FACILITIES WILL NOT BE GRANTED PRIOR TO BACKFLOW PREVENTION APPROVAL.

15. CONSTRUCTION OF WATER UTILITIES SHALL BEGIN WITHIN 1 YEAR FROM THE GLOBAL WATER APPROVAL DATE OF PLANS. IF CONSTRUCTION HAS NOT STARTED WITHIN 1 YEAR, PLANS SHALL BE RESUBMITTED TO GLOBAL WATER RESOURCES FOR REVIEW AND RE-APPROVAL PRIOR TO START OF CONSTRUCTION.

16. ALL WORK AND MATERIALS SHALL CONFORM TO GLOBAL WATER RESOURCES STANDARDS, LATEST REVISION; CONTRACT SPECIFICATIONS AND DRAWINGS; THE ARIZONA DEPARTMENT OF ENVIRONMENTAL QUALITY STANDARDS AND REVISIONS; CURRENT MAG SPECIFICATIONS; AND ANY REQUIREMENT OF THE AUTHORIZED LOCAL GOVERNING AUTHORITY, AS APPLICABLE. IN THE EVENT OF A CONFLICT, THE MORE STRINGENT REQUIREMENT SHALL GOVERN, AS DETERMINED BY THE OWNER. FAILURE TO MEET ANY OF THESE REQUIREMENTS SHALL BE CAUSE FOR REJECTION.

17. PRIOR TO CONSTRUCTION, ALL PERMITS SHALL BE SECURED AS REQUIRED FROM THE APPROPRIATE GOVERNING AGENCIES.

18. WATER LINE CONSTRUCTION SHALL BE IN ACCORDANCE WITH THE REQUIREMENTS OF MAG SPECIFICATION SECTION 610 WITH THE EXCEPTION THAT ASBESTOS-CEMENT PIPE AND CONCRETE PIPE ARE NOT ACCEPTABLE.

19. PVC PIPE SHALL BE AWWA C-900 CLASS 200 DR-14 ELASTOMERIC-GASKET BELL FOR LINES 6 TO 12 INCHES IN DIAMETER AND AWWA C-905 CLASS 165 DR-25 ELASTOMERIC-GASKET BELL FOR LINES LARGER THAN 12 INCHES. MORTAR LINED DUCTILE IRON PIPE SHALL BE IN ACCORDANCE WITH MAG SECTION 750 AND POLYETHYLENE WRAPPED FOR THE ENTIRE LENGTH IN ACCORDANCE WITH MAG SECTION 610.5.

20. ALL WATER LINES MUST HAVE A MINIMUM COVER OF 36 INCHES OVER THE TOP OF THE PIPE TO FINISH GRADE. PIPES 12 INCHES AND LARGER SHALL HAVE A MINIMUM COVER OF 48 INCHES. ALL WATER SERVICES SHALL HAVE A MINIMUM COVER OF 30 INCHES.

21. ALL FRAMES, COVERS, VALVE BOXES, ETC., SHALL BE ADJUSTED TO FINISHED GRADE PRIOR TO PLACING OF ASPHALTIC CONCRETE SURFACE COURSE BY THE PAVING CONTRACTOR.

22. ALL WATER LINES SHALL BE PRESSURED AND LEAKAGE TESTED IN ACCORDANCE WITH MAG SEC. 610-14. RESULTS ARE TO BE GIVEN, IN WRITING, TO GLOBAL WATER RESOURCES.

GLOBAL WATER GENERAL SEWER NOTES:

1. FINAL ACCEPTANCE OF UNDERGRROUND FACILITIES BY GLOBAL WATER RESOURCES, LLC SHALL BE IN ACCORDANCE WITH GLOBAL WATER RESOURCES CODE OF PRACTICE GWR-CP-01-008, LATEST REVISION.

2. PRIOR TO ACCECPTANCE, A VIDEO SURVEY OF THE ENTIRE SEWER SYSTEM, MAINLINE AND SERVICES SHALL BE COMPLETED.

3. WATER METERS WILL NOT BE INSTALLED TO ANY WATER SERVICE LOCATION UNTIL THE ENTIRE SEWER SYSTEM HAS BEEN INSPECTED, APPROVED, AND ACCEPTED BY GLOBAL WATER RESOURCES, ALL EASEMENTS ARE SIGNED, RECORDED, AND A VIDEO SURVEY HAS BEEN COMPLETED AND APPROVED.

4. IT SHALL BE THE CONTRACTORS SOLE RESPONSIBILITY TO VERIFY THE PRESENCE AND LOCATION OF ANY AND ALL EXISTING OVERHEAD AND/OR UNDERGROUND UTILITIES THAT MAY INTERFERE WITH THIS CONSTRUCTION, WHETHER OR NOT SAID UTILITIES ARE SHOWN ON THE CONSTRUCTION PLANS FOR THIS PROJECT. CONTRACTOR SHALL ADEQUATELY PROTECT AND MAINTAIN SUCH UTILITIES AND OBSERVE ALL POSSIBLE PRECAUTIONS TO AVOID ANY DAMAGE TO THESE FACILITIES.

5. THE CONTRACTOR SHALL MAKE EXPLORATORY EXCAVATIONS AND LOCATE EXISTING UNDERGROUND FACILITIES SUFFICIENTLY IN ADVANCE OF CONSTRUCTION TO PERMIT THE REVISION OF THESE PLANS IF NECESSARY DUE TO A CONFLICT BETWEEN FACILITIES PROPOSED AND EXISTING FACILITIES.

6. IT SHALL BE THE CONTRACTOR'S RESPONSIBILITY TO UNCOVER ALL EXISTING SEWER LINES BEING CONNECTED TO, AND TO VERIFY THE LOCATION, DEPTH, AND SIZE OF PIPE, BEFORE ANY CONSTRUCTION BEGINS.

7. IT SHALL BE THE CONTRACTOR'S RESPONSIBILITY TO COORDINATE WITH THE ENGINEER OF RECORD OR SURVEYOR, AND PROVIDE SUFFICIENT TIME FOR SAID ENGINEER OF RECORD OR SURVEYOR TO LOCATE ALL FACILITIES FOR AS-BUILT PURPOSES. FINAL ACCEPTANCE OF THE SEWER FACILITIES WILL NOT BE ISSUED UNTIL AS-BUILT DRAWINGS HAVE BEEN REVIEWED AND ACCEPTED BY GLOBAL WATER RESOURCES.

8. ANY CONSTRUCTION PERFORMED WITHOUT THE KNOWLEDGE OF THE GLOBAL WATER RESOURCES INSPECTOR OR HIS REPRESENTATIVE IS CONSIDERED AT RISK, AND LIABLE FOR REMOVAL AND REPLACEMENT AT THE CONTRACTOR'S EXPENSE.

9. CONTRACTOR SHALL SCHEDULE A PRE-CONSTRUCTION MEETING AT THE JOB SITE WITH THE GLOBAL WATER RESOURCES INSPECTOR PRIOR TO THE START OF CONSTRUCTION AT (602) 319-9325.

10. ALL COPIES OF TEST RESULTS SHALL BE GIVEN TO THE GLOBAL WATER RESOURCES INSPECTOR.

11. REVIEW OF THESE PLANS FOR COMPLIANCE WITH THE REQUIREMENTS OF GLOBAL WATER RESOURCES SHALL NOT PREVENT ANY CORRECTION OF ERRORS FOUND TO BE IN VIOLATION OF ANY APPLICABLE STANDARD OF GLOBAL WATER RESOURCES.

12. CONSTRUCTION OF WATER UTILITIES SHALL BEGIN WITHIN 1 YEAR FROM THE GLOBAL WATER APPROVAL DATE OF PLANS. IF CONSTRUCTION HAS NOT STARTED WITHIN 1 YEAR, PLANS SHALL BE RESUBMITTED TO GLOBAL WATER RESOURCES FOR REVIEW AND RE-APPROVAL PRIOR TO THE START OF CONSTRUCTION.

13. ALL WORK AND MATERIALS SHALL CONFORM TO GLOBAL WATER RESOURCES STANDARDS, LATEST REVISION; CONTRACT SPECIFICATIONS AND DRAWINGS; THE ARIZONA DEPARTMENT OF ENVIRONMENTAL QUALITY STANDARDS AND REVISIONS; CURRENT MAG SPECIFICATIONS; AND ANY REQUIREMENTS OF THE AUTHORIZED LOCAL GOVERNING AUTHORITY, AS APPLICABLE. IN THE EVENT OF A CONFLICT, THE MORE STRINGENT REQUIREMENT SHALL GOVERN, AS DETERMINED BY THE OWNER. FAILURE TO MEET ANY OF THESE REQUIREMENTS SHALL BE CAUSE FOR A REJECTION.

14. PRIOR TO CONSTRUCTION, ALL PERMITS SHALL BE SECURED AS REQUIRED FROM THE APPROPRIATE GOVERNING AGENCIES.

15. SEWER LINE CONSTRUCTION SHALL BE SDR35 PVC IN ACCORDANCE WITH MAG SPECIFICATION SECTION 615, ASTM D-3034 AND ASTM F-679 OR CERAMIC EPOXY DUCTILE IRON PIPE. ALL DUCTILE IRON PIPE SHALL BE POLYETHYLENE WRAPPED FOR THE ENTIRE LENGTH IN ACCORDANCE WITH MAG SPECIFICATION SECTION 610.5, VCP AND CONCRETE PIPE ARE NOT ACCEPTABLE.

16. SEWER LINES REQUIRED A MINIMUM OF 6 FEET OF BACKFILL FROM TOP OF PIPE TO FINISHED GRADE.

17. WATER TIGHTNESS TESTING OF THE SEWER LINE SHALL BE PERFORMED TO SHOW THAT LEAKAGE DOES NOT EXCEED 200/GAL/DAY/INCH DIAMETER/MILE OF PIPE. EXFILTRATION FROM MANHOLES SHALL BE LIMITED TO 0.1 GAL/HOUR/VERTICAL FOOT.

18. WATER TIGHTNESS OF SEWERS AND MANHOLES SHALL BE DETERMINED BY EXFILTRATION OR LOW PRESSURE AIR TESTING IN ACCORDANCE WITH A.A.C. R18-9-E301(D)(3)(f).

19. ALL SEWER LINES MUST BE TESTED USING LOW-PRESSURE AIR-TESTING (ASTM METHOD F 1417-92, RE-APPROVED 1998), IN ACCORDANCE WITH A.A.C. R18-9-E301(D)(2)(j)(i).

SHEET INDEX

SHEET NUMBER	DRAWING NUMBER	DESCRIPTION
		GENERAL
1	-	COVER SHEET, VICINITY MAP AND LOCATION MAP
2	G-1	GENERAL NOTES AND SHEET INDEX
3	G-2	ABBREVIATIONS AND LEGEND
		CIVIL
4	C-1	OVERALL SOUTHEAST WRF SITE PLAN
5	C-2	YARD PIPING PLAN AND DETAILS
6	C-3	SITE GRADING AND PAVING PLAN
7	C-4	16-INCH FORCE MAIN PLAN AND PROFILE STA: 10+00 TO STA: 15+20.87
8	C-5	30-INCH SANITARY SEWER PLAN AND PROFILE STA: 13+00 TO STA: 14+52.08
9	C-6	GATE DETAILS
		MECHANICAL
10	M-1	PARTIAL PLAN
11	M-2	SECTIONS
12	M-3	SECTIONS
13	M-4	ODOR CONTROL SYSTEM PLAN AND SECTIONS
14	M-5	MAGNESIUM HYDROXIDE SYSTEM PLAN, SECTION AND DETAIL
15	M-6	DETAILS
		STRUCTURAL
16	S-1	GENERAL STRUCTURAL NOTES
17	S-2	PLAN AND SECTIONS
18	S-3	PLAN, SECTIONS, AND DETAILS
		ELECTRICAL
19	E-001	ELECTRICAL SYMBOLS AND LEGENDS
20	E-100	SINGLE LINE DIAGRAM, CALCULATIONS AND SCHEDULES
21	E-110	OVERALL SITE PLAN
22	E-111	LIGHTING AND GROUNDING PLAN
23	E-112	POWER PLAN
24	E-120	TYPICAL VFD SCHEMATIC/CONNECTION DIAGRAM
25	E-121	INSTRUMENT AND GENERATOR SCHEMATIC/CONNECTION DIAGRAM
26	E-122	MISCELLANEOUS SCHEMATIC/CONNECTION DIAGRAM
27	E-123	SECURITY SYSTEMS SCHEMATIC/CONNECTION DIAGRAMS
28	E-124	MHS-500 SCHEMATIC/CONNECTION DIAGRAMS
29	E-130	CONDUIT BLOCK DIAGRAM
30	E-131	CONDUIT BLOCK DIAGRAM
31	E-140	TYPICAL DETAILS SHEET 1
32	E-141	TYPICAL DETAILS SHEET 2
33	E-142	TYPICAL DETAILS SHEET 3
34	E-150	TYPICAL SCHEMATIC DIAGRAMS
		INSTRUMENTATION
35	I-001	P&ID SYMBOLS AND LEGENDS
36	I-100	LIFT STATION P&ID SHEET 1
37	I-101	LIFT STATION P&ID SHEET 2
38	I-102	LIFT STATION P&ID SHEET 3

GLOBAL WATER GENERAL SEWER NOTES (CONTINUED):

20. THE TOTAL LENGTH OF SEWER LINE MUST BE TESTED FOR UNIFORM SLOPE, IN ACCORDANCE WITH A.A.C. R18-9-E301(D)(2)(k).

21. DEFLECTION TESTING SHALL BE DONE ON ALL SEWER LINES MADE OF FLEXIBLE MATERIALS TO ENSURE THE INSTALLATION MEETS OR EXCEEDS MANUFACTURER'S RECOMMENDATIONS, IN ACCORDANCE WITH A.A.C. R18-9-E301(D)(2)(i).

22. IN ACCORDANCE WITH A.A.C. R18-9-E301(D)(1)(D), SEPARATION BETWEEN WATER AND SEWER MAIN SHALL COMPLY WITH THE REQUIREMENTS OF 18 A.A.C.5, ARTICLE 5.

REGISTERED PROFESSIONAL ENGINEER (CIVIL) CERTIFICATE NO. 33324 TERESA ANN VALENINE ARIZONA, U.S.A.

THIS MARK MEASURES 1" ON ORIG. PLANS

COPYRIGHT (c) ALL RIGHTS RESERVED NOT TO BE COPIED OR REPRODUCED WITHOUT WRITTEN PERMISSION

VALENTINE CONSULTING ENGINEERS, INC.
4530 East Marwood Drive, Suite 113 Phoenix, Arizona 85048-7633
Phone: (480) 283-8981 Fax: (480) 283-0982

SOUTHEAST LIFT STATION
GENERAL NOTES AND
SHEET INDEX

GLOBAL WATER
RELIABLE • RENEWABLE • RESEALABLE
21410 N. 19th Ave., Ste. 201 - Phoenix, AZ 85027
Ph: 623.580.9600 - Fx: 623.580.9659
www.gwresources.com

Drawn: MCH	Date: 07/07
App'vd: TAV	Date: 07/07
Scale: AS SHOWN	
Sheet: OF 28	
Drawing Number: G-1	

ABBREVIATIONS

AC	ASPHALT CONCRETE
ACI	AMERICAN CONCRETE INSTITUTE
APN	ASSESSOR'S PARCEL NUMBER
AR	AIR RELEASE VALVE
ARFC	AS REQUIRED FOR CONSTRUCTION
ASME	AMERICAN SOCIETY OF MECHANICAL ENGINEERS
ASPH	ASPHALT
ASS	ASSEMBLY
@	AT
AVR	AIR/VACUUM RELIEF VALVE
AVAIL	AVAILABLE
AWWA	AMERICAN WATER WORKS ASSOCIATION
BOC	BACK OF CURB
BC	BEGIN HORIZONTAL CURVE
BO	BLOW OFF
BOL	BEGINNING OF LINE
BLDG	BUILDING
B.S.L.	BUILDING SET BACK LINE
B.V.C.	BEGIN VERTICAL CURVE
C	CENTER
C/C	CENTER TO CENTER
CA	CEMENT ASBESTOS
CATV	CABLE TELEVISION
CBC	CONCRETE BOX CULVERT
C.C.S.	CONCRETE CYLINDER PIPE
CFS	CUBIC FEET PER SECOND
CIP	CAST IRON PIPE
℄	CENTERLINE
CLR	CLEAR
CM	CORRUGATED METAL
CMC	CEMENT MORTAR COATED
CML	CEMENT MORTAR LINED
CML&C	CEMENT MORTAR LINED & COATED
CMP	CORRUGATED METAL PIPE
CO	CLEAN OUT
CONC	CONCRETE
CONST	CONSTRUCTION
CPLG	COUPLING
D	DRAIN
DG	DECOMPOSED GRANITE
DTL	DETAIL
DI	DRAIN INLET
DIA	DIAMETER
DIP	DUCTILE IRON PIPE
D/L	DAYLIGHT
DWG	DRAWING
EA	EACH
EC	END HORIZONTAL CURVE
E.F.	EACH FACE
EMH	ELECTRIC HANDHOLE
EL	ELEVATION
ELEC	ELECTRIC
E'LY	EASTERLY
EM	ELECTRIC METER
EOP	EDGE OF PAVEMENT
EP	ELECTRIC PANEL
EPED	ELECTRIC PEDESTAL
EV	ELECTRIC VAULT
E.V.C.	END VERTICAL CURVE
EOL	END OF LINE
E.W.	EACH WAY
EXIST	EXISTING
FAO	FOUL AIR DUCT
FND	FOUND
F.F.	FINISHED FLOOR
FH	FIRE HYDRANT
FL	FLOW LINE
FLG	FLANGE
FP	FLAG POLE
GA	GUAGE
GAL	GALLON
GALV	GALVANIZED
GP	GUY POLE
GPT	GUARD POST
GSV	GAS VALVE
GW	GUY WIRE
HDWL	HEADWALL
HH	HAND HOLE
HORIZ	HORIZONTAL
HPG	HIGH PRESSURE GASLINE
ID	INSIDE DIAMETER
IE	INVERT ELEVATION
INV	INVERT
IRRIG	IRRIGATION
L	CURVE LENGTH
LF	LINEAR FEET
LOC	LIMITS OF CONSTRUCTION
LS	LUMP SUM
LT	LEFT
M.A.G.	MARICOPA ASSOCIATION OF GOVERNMENTS
MAX	MAXIMUM
MB	MAILBOX
MH	MANHOLE
MIN	MINIMUM
M.O.	MARKOUT
MRKD	MARKED
MTR	METER
MW	MANWAY
N.A.O.S.	NATURAL AREA OPEN SPACE
NEMA	NATIONAL ELECTRICAL MANUFACTURERS ASSOCIATION
N.T.S.	NOT TO SCALE
NO.	NUMBER
NPW	NON-POTABLE WATER
OFF	OFFSET
O.C.	ON CENTER
OD	OUTSIDE DIAMETER
PCCP	PRESTRESSED CONCRETE CYLINDER PIPE
PED	PEDESTAL
P.I.	HORIZONTAL POINT OF INFLECTION
PLCS	PLACES
PMH	PROPOSED MANHOLE
PRA	PRESSURE REGULATING ASSEMBLY
PRES	PRESSURE
PV	PLUG VALVE
PVC	POLYVINYL CHLORIDE PIIPE
PW	POTABLE WATER
R	RADIUS
RCCP	REINFORCED CONCRETE CYLINDER PIPE
RCP	REINFORCED CONCRETE PIPE
REG.	REGIONAL
REQ'D	REQUIRED
RR	RAILROAD
R/W	RIGHT-OF-WAY
ROW	RIGHT-OF-WAY
RT	RIGHT
SEC	SECTION
SCO	SEWER CLEAN OUT
SD	STORM DRAIN
SDMH	STORM DRAIN MANHOLE
SDR	STANDARD DIMENSION RATIO
SIM	SIMILAR
SMH	SEWER MANHOLE
SHT	SHEET
SPEC(S)	SPECIFICATION(S)
SQ	SQUARE
SY	SQUARE YARDS
SS	SANITARY SEWER
SSFM	SANITARY SEWER FORCEMAIN
STA	STATION
STD	STANDARD
STL	STEEL
STLT	STREET LIGHT
T	TANGENT
t	STEEL THICKNESS
T/B	TOP AND BOTTOM
TC	TOP OF CURB
TELE	TELEPHONE
THH	TELEPHONE HANDHOLE
THK	THICK
TG	TOP OF GRATE
TOW	TOE OF SLOPE
T.O.P.	TOP OF PIPE
TPED	TELEPHONE PEDESTAL
TPOLE	TELEPHONE POLE
TRANS	TRANSFORMER
TYP	TYPICAL
UG	UNDERGROUND
UGE	UNDERGROUND ELECTRICAL
UTELE	UNDERGROUND TELEPHONE
VAC	VACUUM
VERT	VERTICAL
VLV	VALVE
V.P.I.	VERTICAL POINT OF INTERSECTION
W	WATERLINE
W/	WITH
WGV	WATER GATE VALVE
W'LY	WESTERLY
WM	WATER METER
WMH	WATER MANHOLE
WS	WATER SERVICE
WSP	WELDED STEEL PIPE
WV	WATER VAULT
XMH	EXISTING MANHOLE
YD	YARD
Δ	DELTA ANGLE
ø	DIAMETER
#	NUMBER

1. (*) DENOTES DIMENSIONS, DISTANCES AND ELEVATIONS TO BE SURVEYED AND FIELD VERIFIED BY THE CONTRACTOR PRIOR TO INITIATING ANY OF THE WORK.
2. (**) DENOTES DIMENSIONS AND ELEVATIONS TO BE DETERMINED BASED ON EQUIPMENT MANUFACTURER SELECTED.

LEGEND

SYMBOL	ITEM
	EXISTING BUILDING/STRUCTURE
	NEW BUILDING/STRUCTURE
—x——x—	EXISTING FENCE
—x——x—	NEW FENCE
326	EXISTING GROUND CONTOUR
326	FINISH GRADE CONTOUR
326	PROPOSED CONTOUR BY OTHERS
	EXISTING CURVEBACK, CURB, AND GUTTER
	EXISTING SIDEWALK
	EXISTING ROADWAY
	EXISTING DITCH
	EXISTING FIRE HYDRANT
	NEW FIRE HYDRANT
	EXISTING SEWER MANHOLE
	NEW SEWER MANHOLE
APN 123-456-78	PARCEL NUMBER
	EASEMENT LINE
1283 / 1283	HORIZONTAL AND VERTICAL CONTROL POINT
1349.2	SPOT ELEVATION
	EXISTING IRRIGATION VALVE BOX
	EXISTING UTILITY METER
	EXISTING BUSH OR TREE
	EXISTING CACTUS
	EXISTING PALM TREE
	EXISTING VALVE
CB	EXISTING CATCH BASIN
	EXISTING POST/SIGN
	EXISTING WELL
	EXISTING REDUCER
	EXISTING CAP
	EXISTING POWER POLE
	EXISTING AIR RELEASE VALVE
	EXISTING TRAFFIC LIGHT
CO	EXISTING CLEAN OUT
CO	CLEAN OUT
	DRAINAGE DIRECTION
	DEMOLISH AND REMOVE
	CONCRETE ENCASEMENT
	GROUND PROFILE, EXISTING
00+00	CENTERLINE
	NEW SEWER LINE IN PROFILE
—16SSFM—	NEW 16 SANITARY SEWER FORCEMAIN
—30SS—	NEW 30 SANITARY SEWER
R/W	RIGHT-OF-WAY LINE
P/L	PROPERTY LINE
16FM	16 INCH FORCEMAIN
30SS	30 INCH SANITARY SEWER
24RW	24 INCH RECLAIMED WATER
16W	16 INCH WATER

FLANGED FITTINGS

SYMBOL	ITEM
	CROSS
	CROSS UP
	TEE
	TEE UP
	TEE DOWN
	REDUCING TEE
	REDUCING TEE UP
	LATERAL
	LATERAL DOWN
	LATERAL UP
	22.5° ELBOW
	45° ELBOW
	45° ELBOW DOWN
	45° ELBOW UP
	REDUCING ELBOW
	90° ELBOW LONG
	90° ELBOW LONG DOWN
	90° ELBOW LONG UP
	90° ELBOW SHORT
	90° ELBOW SHORT DOWN
	90° ELBOW SHORT UP
	CONCENTRIC/ECCENTRIC REDUCER
	FLEXIBLE COUPLING
	DAMPER VALVE
	GATE VALVE
	PLUG VALVE
	CHECK VALVE

MECHANICAL JOINT FITTINGS

SYMBOL	ITEM
	CROSS
	TEE
	REDUCING TEE
	LATERAL
	90° ELBOW LONG
	45° ELBOW
	22.5° ELBOW
	REDUCER
	ENDJOINT

SINGLE LINE FITTINGS

SYMBOL	ITEM
	TEE
	TEE UP
	TEE DOWN
	LATERAL
	90° ELBOW
	45° ELBOW
	90° ELBOW DOWN
	90° ELBOW UP
	UNION
	CONCENTRIC REDUCER
	ECCENTRIC REDUCER
	CAP PLUG

SECTION AND DETAIL KEY

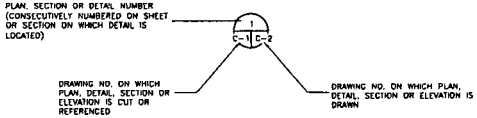

NOTE: WHEN PERTAINING TO DETAILS, CIRCLE IS REPLACED WITH A SQUARE

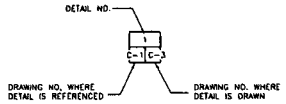

DETAILS

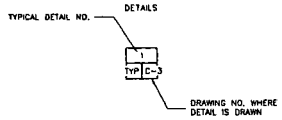

TYPICAL DETAILS

THIS MARK MEASURES 1" ON ORIG. PLANS

COPYRIGHT (c) ALL RIGHTS RESERVED
NOT TO BE REPRODUCED
WITHOUT WRITTEN PERMISSION

VALENTINE
ENGINEERING CONSULTANTS, LLC
4530 East Kimwood Drive, Suite 113 Phoenix, Arizona 85048-7693
Phone: (480) 283-8991 Fax: (480) 283-0082

SOUTHEAST LIFT STATION
ABBREVIATIONS AND LEGEND

GLOBAL WATER
RELIABLE • RENEWABLE • REUSABLE
21410 N. 19th Ave., Ste. 201 • Phoenix, AZ 85027
Ph: 623.580.9600 • Fx: 623.580.9659
www.globalwaterpartners.com

Drawn: MCH	Date: 07/07
App'vd: TAV	Date: 07/07
Scale: AS SHOWN	
Sheet: OF 22	
Drawing Number: G-2	

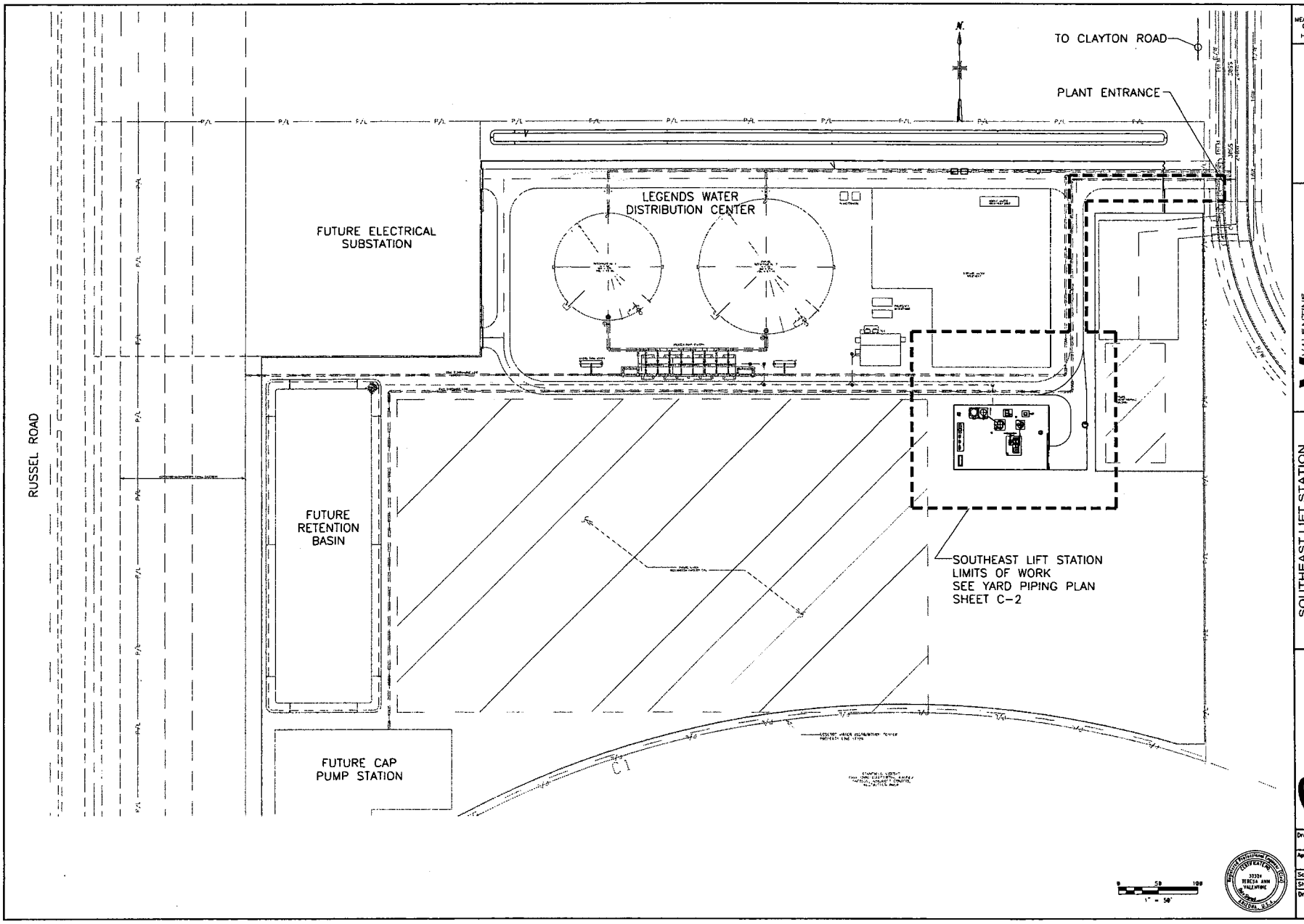

THIS MARK MEASURES 1" ON ORIG. PLANS

COPYRIGHT (c) ALL RIGHTS RESERVED
NOT TO BE COPIED OR REPRODUCED
WITHOUT WRITTEN PERMISSION

VALENTINE
ENGINEERING & MANAGEMENT, L.L.C.
4607 East Melinda Drive, Suite 113 Phoenix, Arizona 85048-7693
Phone: (480) 203-8891 Fax: (480) 283-0082

SOUTHEAST LIFT STATION
OVERALL SOUTHEAST WRF
SITE PLAN

GLOBAL WATER
RELIABLE • RENEWABLE • BEISABLE
21410 N. 19th Ave., Ste. 201 Phoenix, AZ 85027
Ph: (623) 516-5830 Fax: (623) 581-9453
www.gwrescurces.com

Drawn: MCH	Date: 06/07
App'vd: TAV	Date: 06/07
Scale: AS SHOWN	
Sheet:	OF 29
Drawing Number: C-1	

Registered Professional Engineer (Civil) CERTIFICATE 33324 REBECA ANN VALENTINE Date Signed ARIZONA, U.S.A.

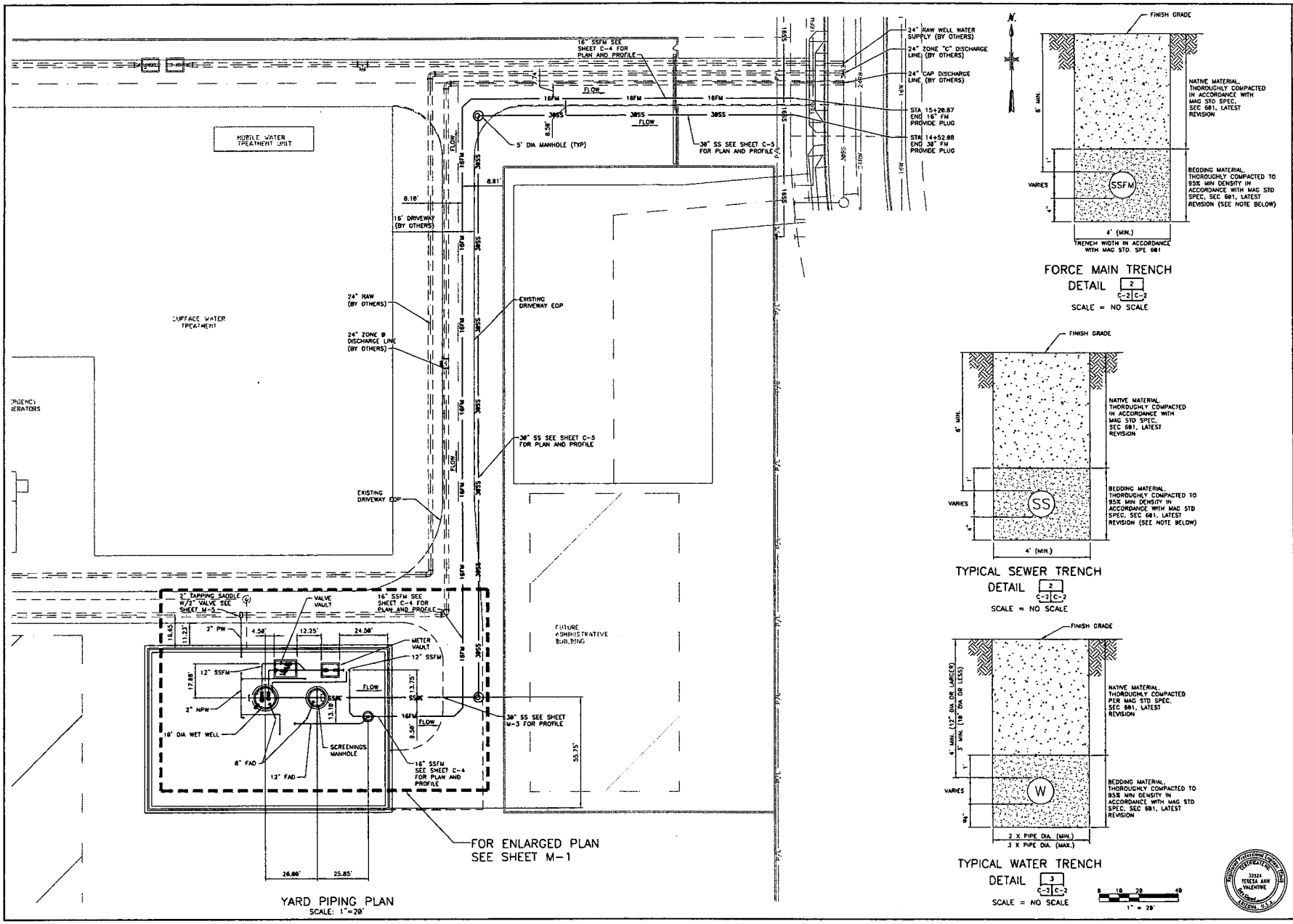

YARD PIPING PLAN
SCALE: 1"=20'

FORCE MAIN TRENCH DETAIL 2 / C-2 | C-2
SCALE = NO SCALE

TYPICAL SEWER TRENCH DETAIL 2 / C-2 | C-2
SCALE = NO SCALE

TYPICAL WATER TRENCH DETAIL 3 / C-2 | C-2
SCALE = NO SCALE

0 10 20 40
1" = 20'

Registered Professional Engineer (Civil) CERTIFICATE NO. 32324 TERESA ANN VALENTINE Date Signed ARIZONA, U.S.A.

THIS MARK MEASURES 1" ON ORIG. PLANS

COPYRIGHT (c) ALL RIGHTS RESERVED NOT TO BE COPIED OR REPRODUCED WITHOUT WRITTEN PERMISSION

VALENTINE
Consultants, Inc.
4530 East Muirwood Drive, Suite 113 Phoenix, Arizona 85048-7633
Phone: (480) 283-6891 Fax: (480) 283-0082

SOUTHEAST LIFT STATION YARD PIPING PLAN AND DETAILS

GLOBAL WATER
RELIABLE - RENEWABLE - REUSABLE
21410 N. 19th Ave., Ste. 201 • Phoenix, AZ 85027
Ph: 623.580.9600 • Fx: 623.580.9669
www.gwresources.com

Drawn: MCH	Date: 06/07
App'vd: TAV	Date: 06/07
Scale: AS SHOWN	
Sheet: OF 28	
Drawing Number: C-2	

POINT COORDINATES				
POINT NUMBER	ELEVATION	DESCRIPTION	NORTHING	EASTING
1	1311.0300	T/CURB	687585.9612	792538.4863
2	1311.0300	T/SLAB	687583.7455	792569.6598
3	1311.0300	T/SLAB	687587.8788	792591.2329
4	1311.0300	T/SLAB	687571.3283	792568.4023
5	1311.0300	T/SLAB	687578.3383	792585.4923
6	1311.0300	T/SLAB	687558.5942	792581.8113
7	1310.0000	T/SLAB	687566.2953	792495.8075
8	1311.0300	T/SLAB	687566.7945	792507.6721
9	1311.0300	T/SLAB	687579.7557	792503.6721
10	1315.0000	T/WALL	687586.6258	792616.3368
11	1311.0300	T/SLAB	687528.7945	792586.1128

NOTES:

1. COORDINATE EXTERIOR WALL WITH SITE GRADING, LEGENDS WATER DISTRIBUTION GRADING PLAN.

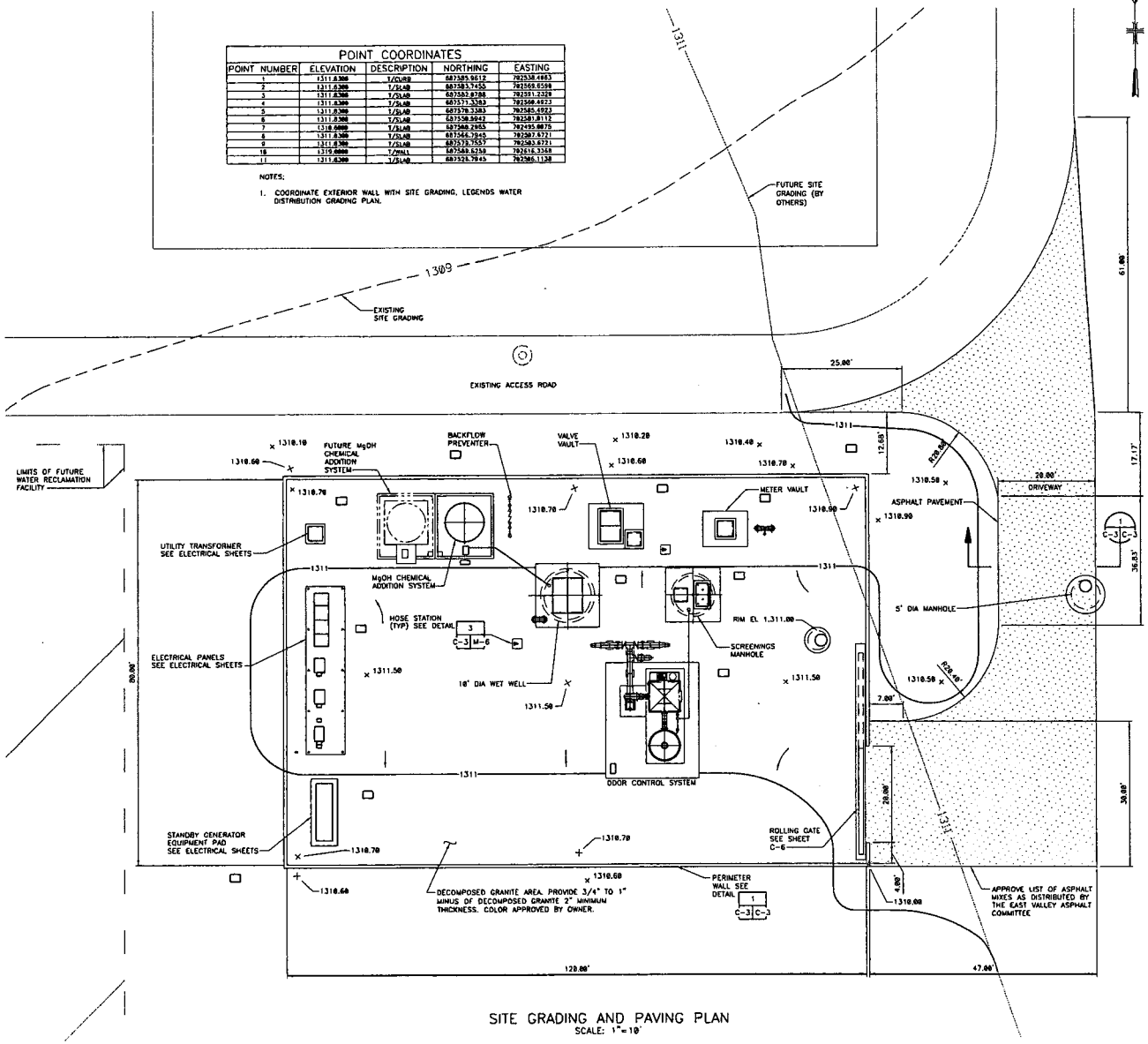

SITE GRADING AND PAVING PLAN
SCALE: 1"=10'

0 5 10 20
1" = 10'

BLOCK SCREEN WALL NOTES:

1. PROVIDE CONTROL JOINTS AT 24'-0" O.C. MAX
2. PROVIDE DRAINAGE OPENINGS WITH 8"x8"x16" CMU BLOCK TURNED ON ITS SIDE WITH CELLS OPEN FOR 100-YEAR STORM WATER DRAINAGE.
3. PROVIDE BOND BEAM WITH 2 - #4'S IN SECOND COURSE OF MASONRY WALL IN AREAS WHERE DRAINAGE OPENING IS LARGER THAN 16".
4. PROVIDE ADDITIONAL VERTICAL #4 AT BOTH SIDES OF DRAINAGE OPENINGS, GROUT SOLID.
5. PROVIDE ADDITIONAL VERTIVAL #5 AT WALL ENDS, CORNERS AND INTERSECTIONS.
6. COMPACT DISTURBED GRADE TO 95% PROCTOR.

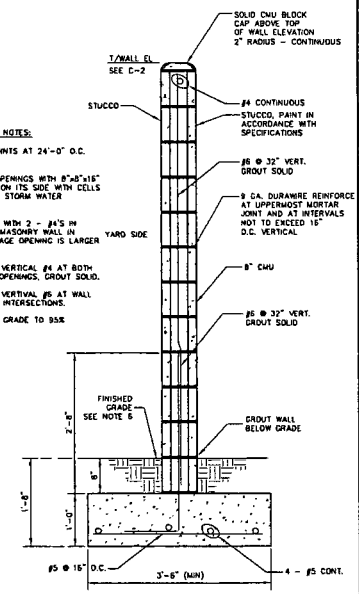

PERIMETER WALL DETAIL 1 C-3 C-3
SCALE = NO SCALE

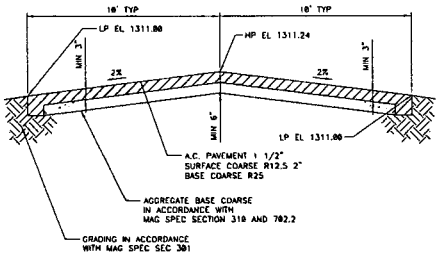

SECTION 1 C-3 C-3
SCALE = N.T.S.

THIS MARK MEASURES 1" ON ORIG. PLANS

COPYRIGHT (c) ALL RIGHTS RESERVED NOT TO BE COPIED OR REPRODUCED WITHOUT WRITTEN PERMISSION

VALENTINE
ENVIRONMENTAL CONSULTANTS, U.S.A.
4636 East Universal Drive, Suite 112 Phoenix, Arizona 85044-7633
Phone: (480) 283-8591 Fax: (480) 283-0982

SOUTHEAST LIFT STATION
SITE GRADING AND PAVING PLAN

GLOBAL WATER
RELIABLE • RENEWABLE • RELISABLE
21410 N. 19th Ave., Ste 201 • Phoenix, AZ 85027
Ph: 623.580.9600 • Fax: 623.580.9605
www.gwresources.com

Drawn: MCH	Date: 05/07
App'vd: TAV	Date: 06/07
Scale: AS SHOWN	
Sheet: OF 29	
Drawing Number: C-3	

Registered Professional Engineer (Civil) CERTIFICATE 32374 TERESA ANN VALENTINE ARIZONA, U.S.A.

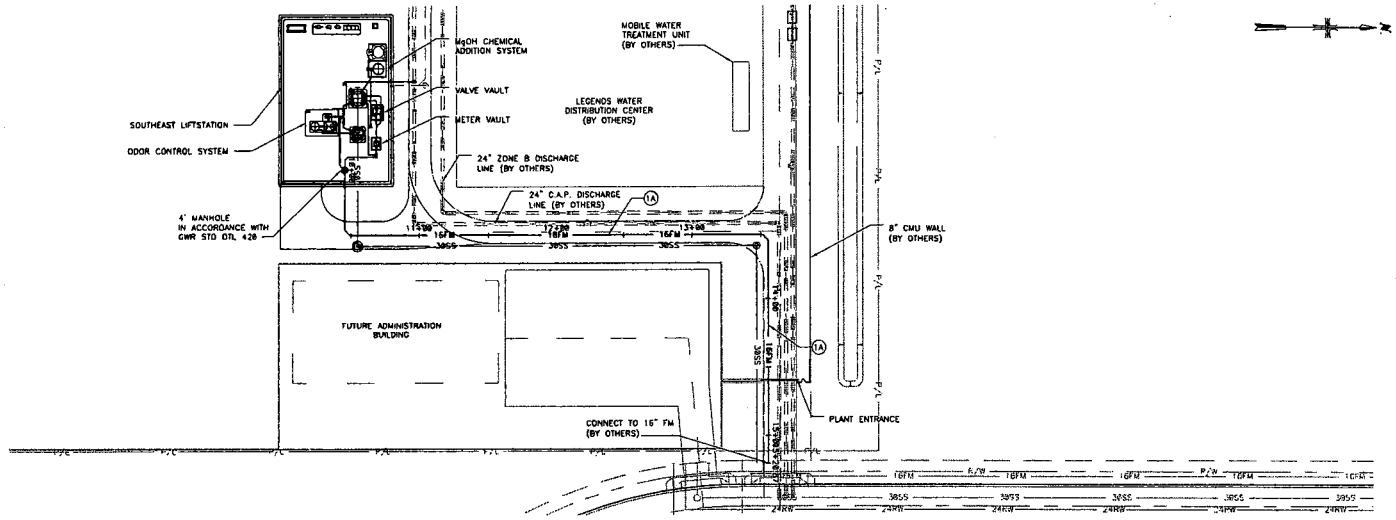

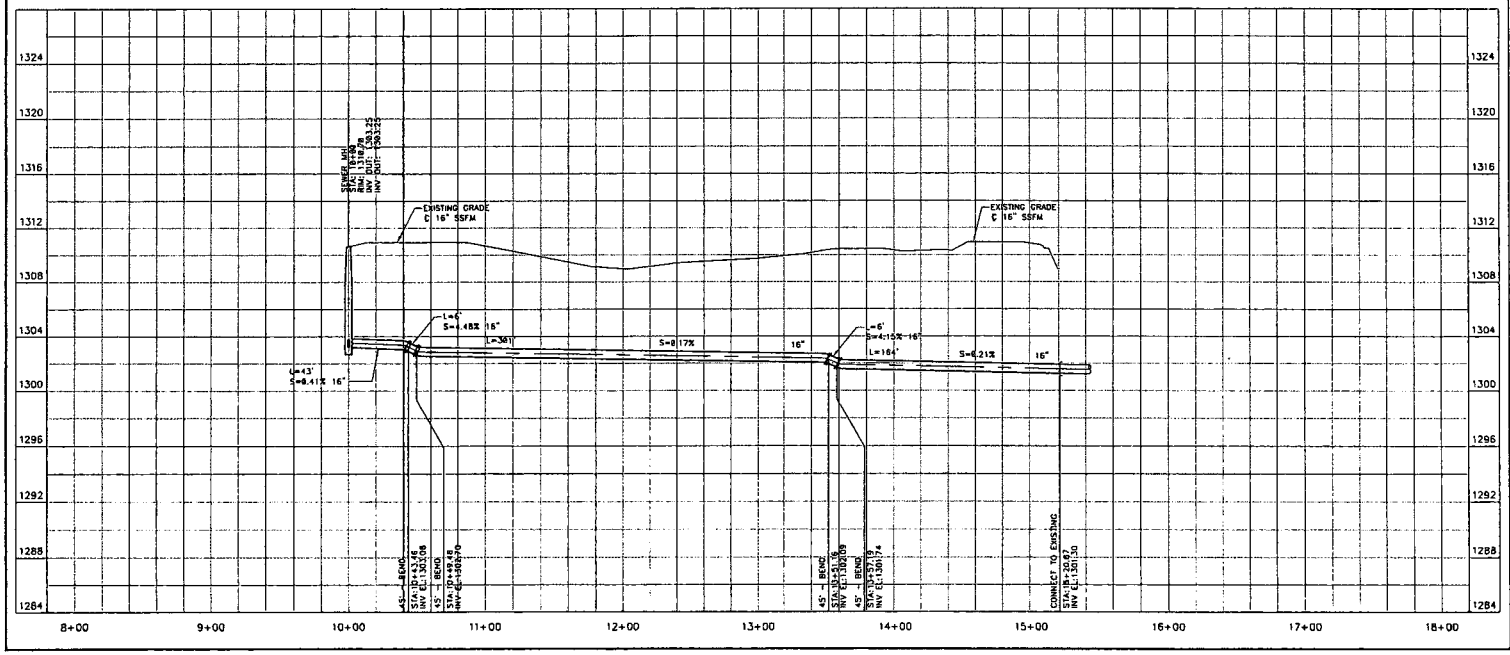

CONSTRUCTION NOTES

1A	PROVIDE 16" SSFM RESTRAIN ALL JOINTS	LF	521

THIS MARK MEASURES 1" ON ORIG. PLANS

COPYRIGHT (c) ALL RIGHTS RESERVED NOT TO BE COPIED OR REPRODUCED WITHOUT WRITTEN PERMISSION

VALENTINE
ARCHITECTURE, ENGINEERING, LTD.
4530 East Muirwood Drive, Suite 113 Phoenix, Arizona 85048-7693
Phone: (480) 283-4891 Fax: (480) 283-0682

SOUTHEAST LIFT STATION
16-INCH SSFM
STA: 10+00 TO STA: 15+20.87

HORIZONTAL SCALE: 1" = 40' VERTICAL SCALE: 1" = 4'

GLOBAL WATER
RELIABLE - RENEWABLE - REUSABLE
21410 N. 19th Ave. - Ste. 201 - Phoenix, AZ 85027
Ph: 623.580.9600 - Fx: 623.580.9659
www.globalwaterinc.com

PRELIMINARY
NOT FOR CONSTRUCTION

10 0 10 20
HORIZ SCALE IN FEET
2 0 2 4
VERT SCALE IN FEET

CALL FOR THE BLUE STAKES
Maricopa County
263-1100
Outside Maricopa County
1-800-782-5348
Out State Center

Registered Professional Engineer (Civil) CERTIFICATE
33324
TERESA ANN VALENTINE
ARIZONA, U.S.A.

Drawn: SPG	Date: 07/07
App'vd: TAV	Date: 07/07
Scale: AS SHOWN	
Sheet: OF 29	
Drawing Number: C-4	

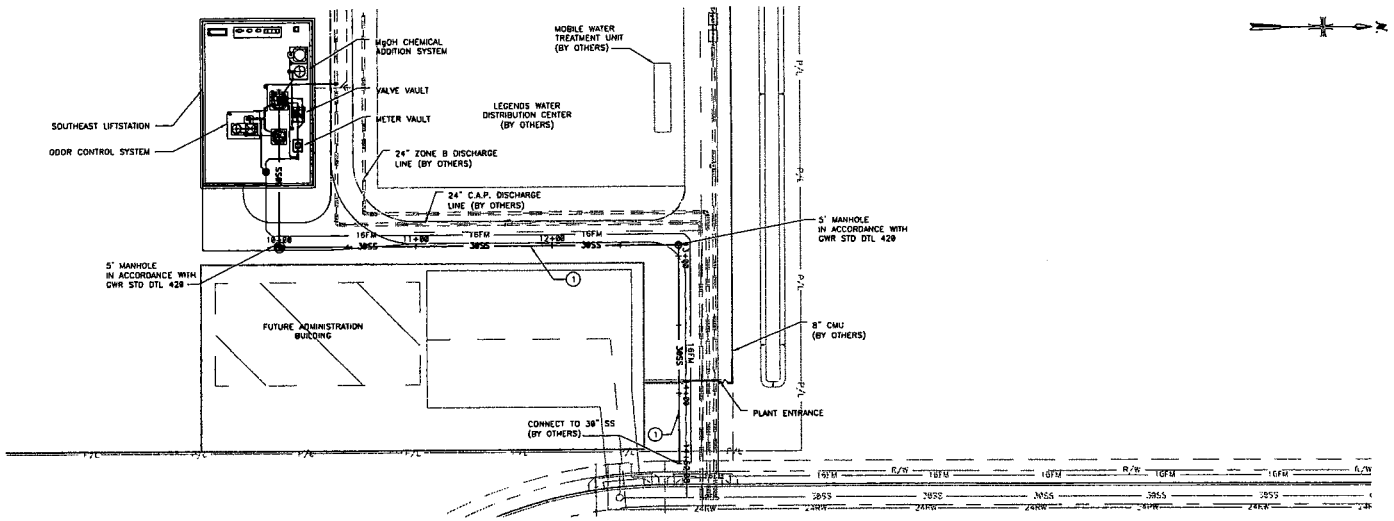

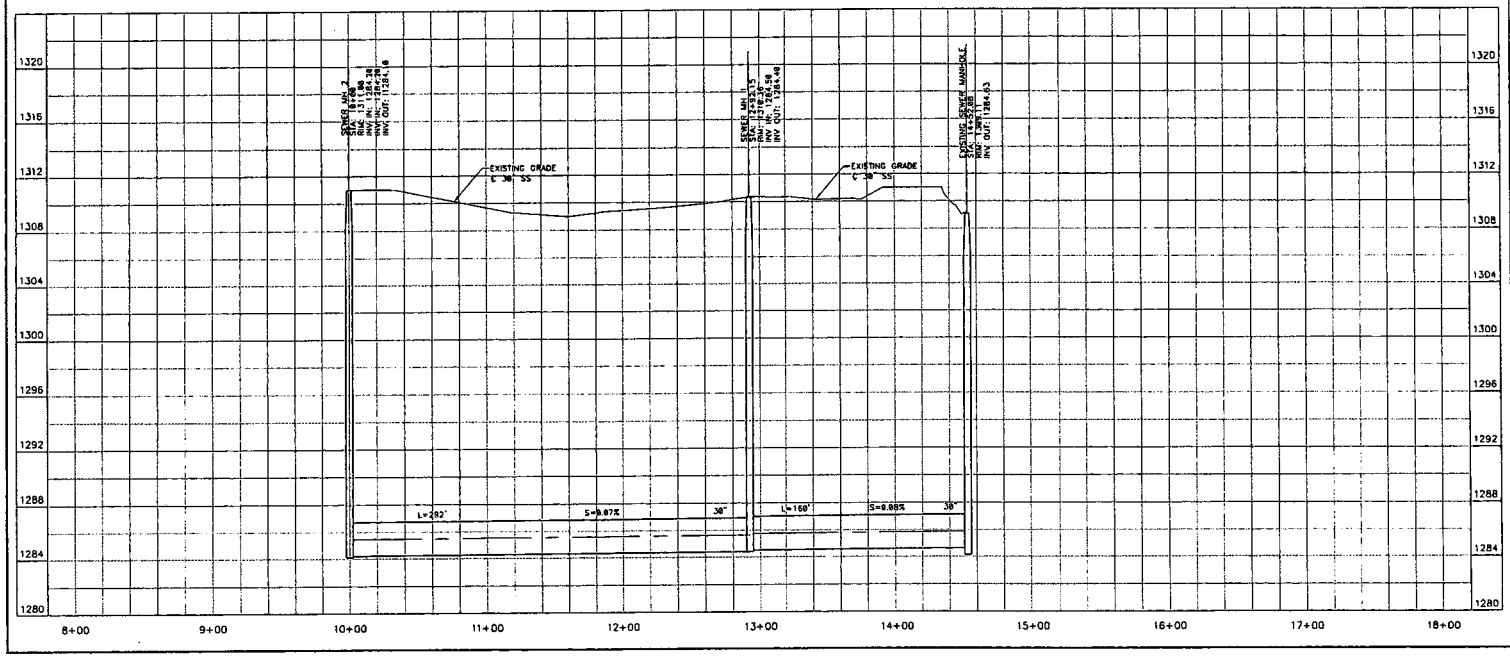

CONSTRUCTION NOTES

1	PROVIDE 30" SS	LF	452

THIS MARK MEASURES 1" ON ORIG. PLANS

COPYRIGHT (c) ALL RIGHTS RESERVED NOT TO BE COPIED OR REPRODUCED WITHOUT WRITTEN PERMISSION

VALENTINE ARCHITECTS & CONSULTANTS LLC
4030 East McDowell Drive, Suite 113 Phoenix, Arizona 85008-7693
Phone: (480) 283 - 8991 Fax: (480) 283 - 0882

SOUTHEAST LIFT STATION
30-INCH SS
STA: 10+00 TO STA: 14+52.08
HORIZONTAL SCALE: 1" = 40' VERTICAL SCALE: 1" = 4'

GLOBAL WATER
RELIABLE • RENEWABLE • RESPONSIBLE
21410 N. 19th Ave. - Ste. 201 - Phoenix, AZ 85027
PH: 623-580-9654 FAX: 623-580-9655
www.gwresources.com

PRELIMINARY
NOT FOR CONSTRUCTION

10 0 10 20
HORIZ SCALE IN FEET
2 0 2 4
VERT SCALE IN FEET

For safety due before you dig
CALL FOR THE BLUE STAKES
Inside Maricopa County
263-1100
Outside Maricopa County
1-800-782-5348
Blue Stake Center

REGISTERED PROFESSIONAL ENGINEER (CIVIL)
CERTIFICATE NO. 33324
TERESA ANN VALENTINE
Date Signed
ARIZONA, U.S.A.

Drawn: SPE	Date: 07/07
App'vd: TAV	Date: 07/07
Scale: AS SHOWN	
Sheet:	OF 29
Drawing Number: C-5	

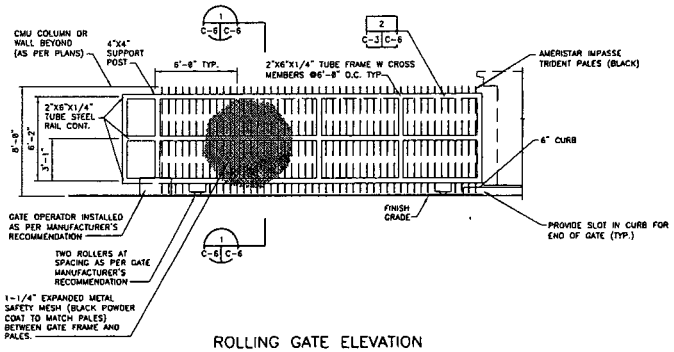

ROLLING GATE ELEVATION

DETAIL 1 C-3 C-6

NOT TO SCALE

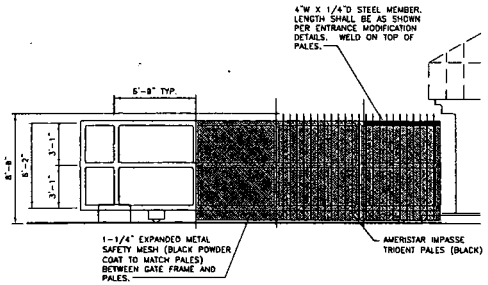

ROLLING GATE ELEVATION

DETAIL 2 C-6 C-6

NOT TO SCALE

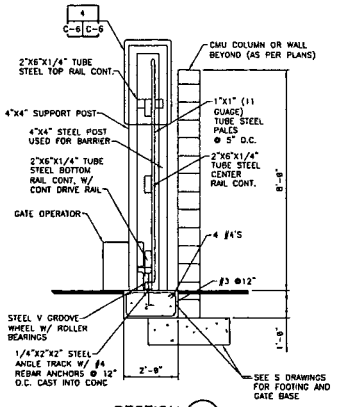

SECTION 1 C-6 C-6

NOT TO SCALE

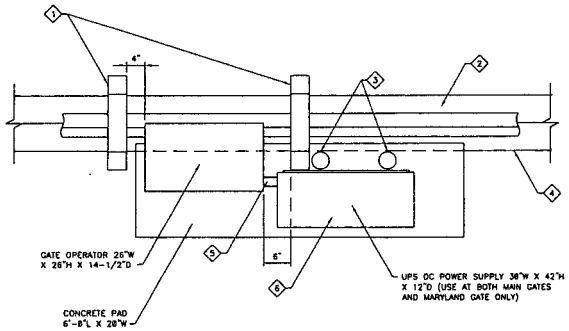

GATE OPERATOR MOUNTING

DETAIL 3 C-6 C-6

NOT TO SCALE

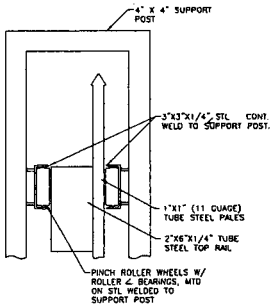

GATE ROLLER

DETAIL 4 C-6 C-6

NOT TO SCALE

NOTES

1. ROLLING GATE SUPPORT POST (SEE SECTION 1 THIS SHEET)
2. ROLLING GATE (SEE DETAIL 1 THIS SHEET)
3. UPS DC POWER SUPPLY SUPPORT POST 4" MINIMUM DIAMETER
4. V-TRACK (SEE DETAIL 5 THIS SHEET)
5. 2" CONDUIT CONNECTING GATE OPERATOR TO UPS DC POWER SUPPLY
6. CONTRACTOR SHALL PROVIDE SUNSCREEN AND SUPPORT STRUCTURE TO PROTECT UPS. LOCATION OF UPS WITH SUNSCREEN SHALL BE IN ACCORDANCE TO MANUFACTURERS RECOMMENDATION AND APPROVED SHOP DRAWINGS.

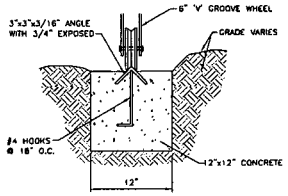

"V" TRACK UNPAVED AREA

DETAIL 5 C-6 C-6

NOT TO SCALE

THIS MARK MEASURES 1" ON ORIG. PLANS

COPYRIGHT (c) ALL RIGHTS RESERVED
NOT TO BE COPIED OR REPRODUCED
WITHOUT WRITTEN PERMISSION

VALENTINE
ENGINEERING, PROPERTIES, LLC.
4530 East Halmond Drive, Suite 113 Phoenix, Arizona 85048-7633
Phone: (480) 283-8591 Fax: (480) 283-0982

SOUTHEAST LIFT STATION
GATE DETAILS

GLOBAL WATER
RELIABLE • RENEWABLE • REUSABLE
21410 N. 19th Ave. - Ste. 201 - Phoenix, AZ 85027
Ph: 623.580.9600 - Fx: 623.580.9699
www.globalwaterassociates.com

Drawn: MCH	Date: 06/07
App'vd: TAV	Date: 06/07
Scale: AS SHOWN	
Sheet: OF 29	
Drawing Number: C-6	

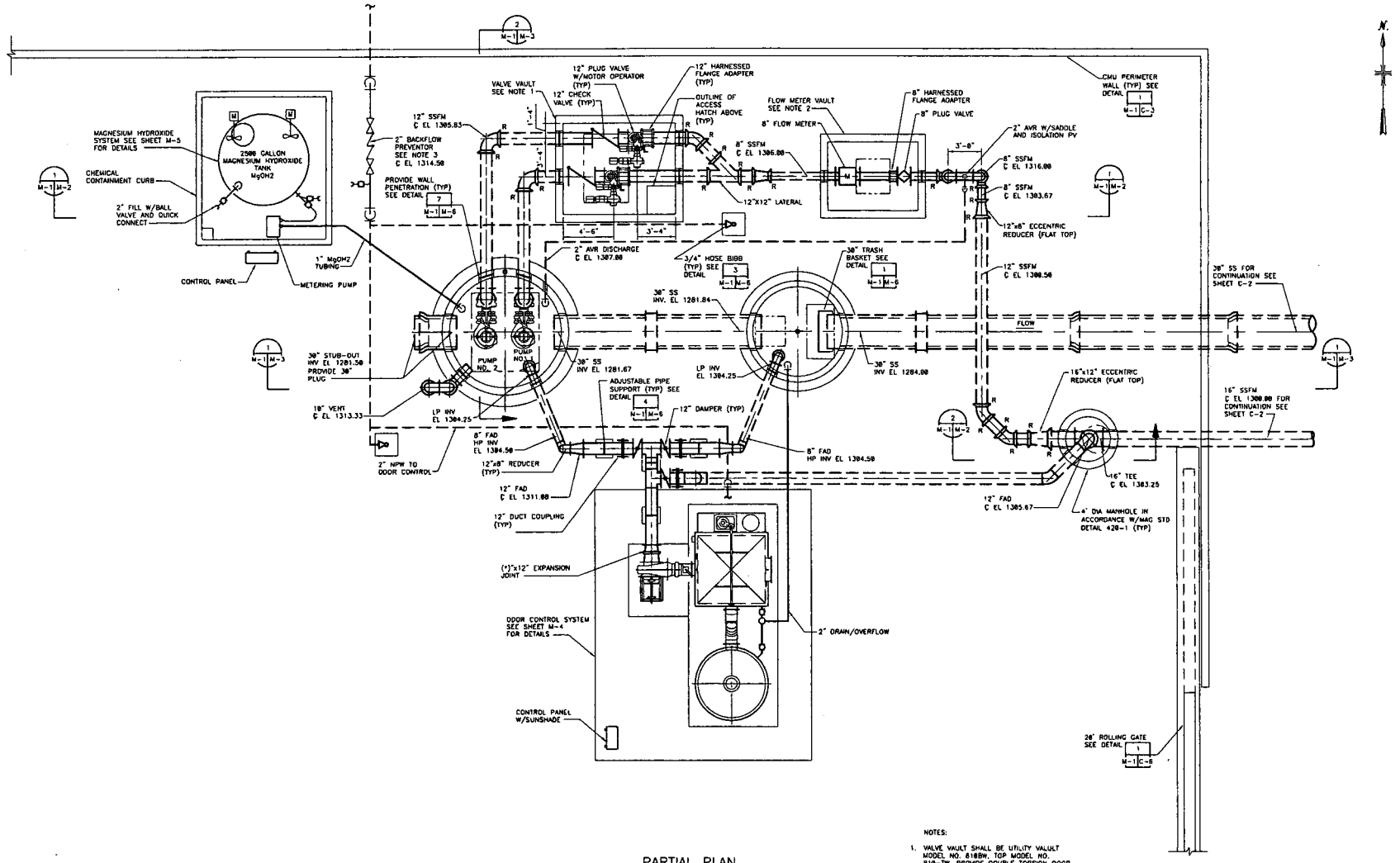

PARTIAL PLAN

SCALE: 1/4"=1'-0"

0 2 4 8

1/4" = 1'-0"

NOTES:

1. VALVE VAULT SHALL BE UTILITY VAULT MODEL NO. 818BW, TOP MODEL NO. 818-TW. PROVIDE DOUBLE TORSION DOOR UTILITY VAULT MODEL NO. 4872. PROVIDE ADDITIONAL COVER MODEL NO. 44-3838 OR EQUAL.
2. FLOW METER VAULT SHALL BE UTILITY VAULT MODEL NO. 6464-WA-MAG314. PROVIDE LOCKING STEEL COVER MODEL NO. 6464-WA-332P OR EQUAL.
3. PROVIDE AND INSTALL BACKFLOW PREVENTION ASSEMBLY IN ACCORDANCE WITH GLOBAL WATER RESOURCES APPROVED MANUFACTURER AND DETAIL 1 M-1 M-5
4. "R" DENOTES RESTRAINED JOINT.

THIS MARK MEASURES 1" ON ORIG. PLANS

COPYRIGHT (c) ALL RIGHTS RESERVED NOT TO BE REPRODUCED OR COPIED IN WHOLE WITHOUT WRITTEN PERMISSION

VALENTINE CONSULTING ENGINEERS LLC
4500 East Indianola Drive, Suite 113 Phoenix, Arizona 85018-7933
Phone: (480) 483-8891 Fax: (480) 483-8892

SOUTHEAST LIFT STATION
PARTIAL PLAN

GLOBAL WATER
RELIABLE · RENEWABLE · REUSABLE
21410 N. 19th Ave., Suite 201, Phoenix, AZ 85027
PH: (623) 580-9654 FAX: (623) 580-9658
www.gwresources.com

Drawn: MCH	Date: 07/07
App'ed: TAV	Date: 07/07
Scale: AS SHOWN	
Sheet: OF 29	
Drawing Number: M-1	

Registered Professional Engineer (Civil) CERTIFICATE NO. 33324 TERESA ANN VALENTINE Date Signed ARIZONA, U.S.A.

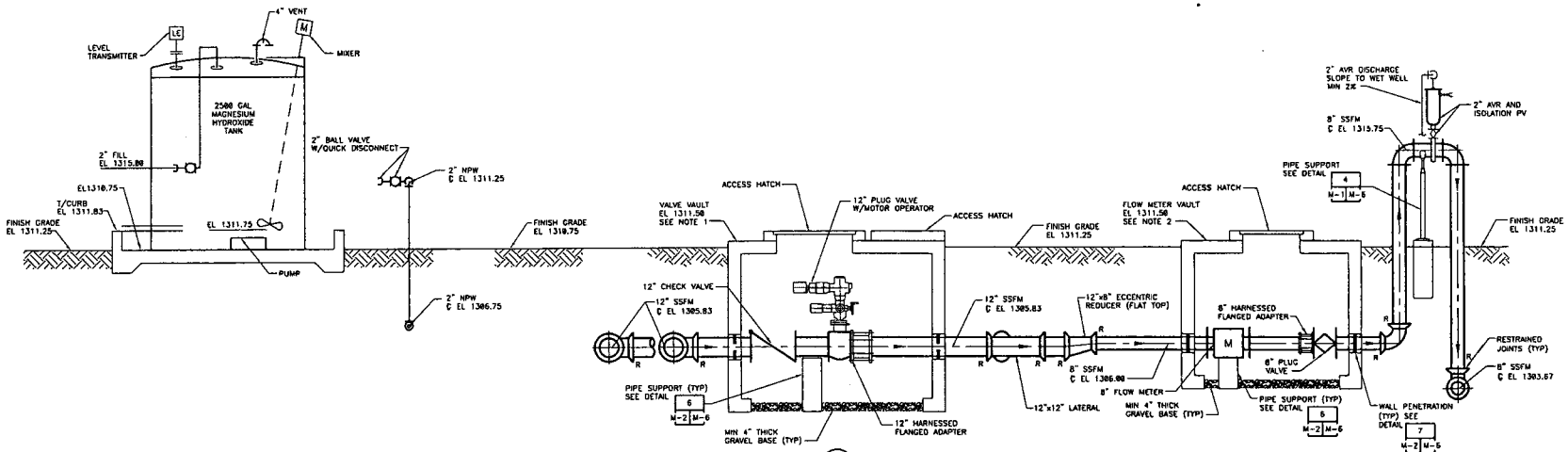

SECTION 1 M-1 M-2

SCALE = 3/8"=1'-0"

0 1 2 4
3/8"=1'-0"

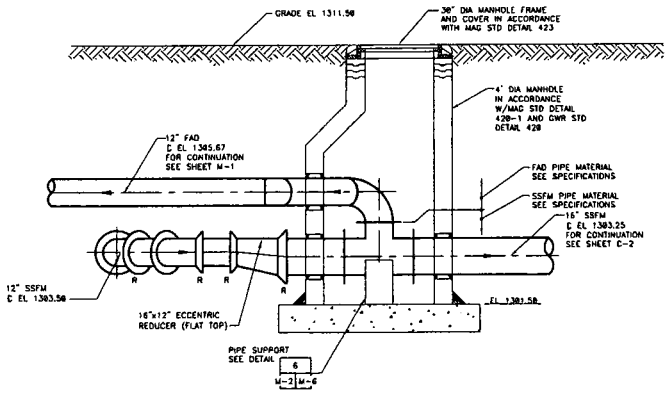

SECTION 2 M-1 M-2

SCALE = 1/2"=1'-0"

0 1 2 4
1/2" = 1'-0"

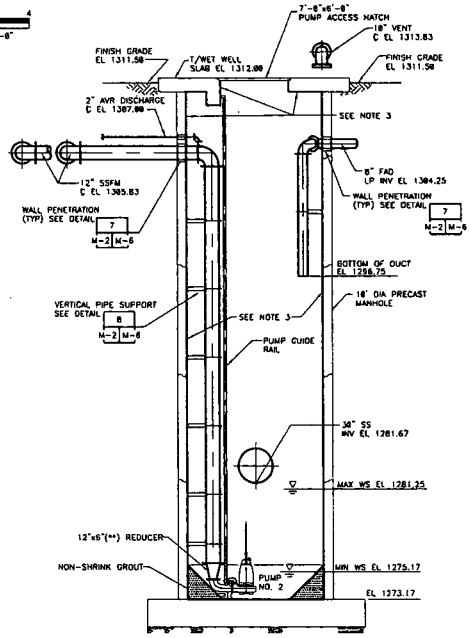

SECTION 3 M-1 M-2

SCALE = 1/4"=1'-0"

0 2 4 8
1/4" = 1'-0"

NOTES:

1. VALVE VAULT SHALL BE UTILITY VAULT MODEL NO. 818BW. TOP MODEL NO. 818-TW. PROVIDE DOUBLE TORSION DOOR UTILITY VAULT MODEL NO. 487Z. PROVIDE ADDITIONAL COVER MODEL NO. 44-3030 OR EQUAL.
2. FLOW METER VAULT SHALL BE UTILITY VAULT MODEL NO. 6464-WA-MAG314. PROVIDE LOCKING STEEL COVER MODEL NO. 6464-WA-332P OR EQUAL.
3. PROVIDE COATING SYSTEM ON ALL INTERNAL SURFACES OF WET WELL AND MANHOLES IN ACCORDANCE WITH SPECIFICATION SECTION 02955.
4. PROVIDE TYPE 316 STAINLESS STEEL FOR ALL FASTENERS, ANCHORSW SUPPORTS AND HARDWARE.
5. PAINT NON SST METALLIC ITEMS IN ACCORDANCE WITH SPECIFICATION SECTION 09900.

REGISTERED PROFESSIONAL ENGINEER (CIVIL) CERTIFICATE NO. 32374 TERESA ANN VALENTINE ARIZONA, U.S.A.

THIS MARK MEASURES 1" ON ORIG. PLANS

COPYRIGHT (c) ALL RIGHTS RESERVED NOT TO BE COPIED OR REPRODUCED WITHOUT WRITTEN PERMISSION

VALENTINE CONSULTING ENGINEERS LLC
4539 East Mulvered Drive, Suite 112 Phoenix, Arizona 85048-7653
Phone: (480) 281-8991 Fax: (480) 281-8992

SOUTHEAST LIFT STATION
SECTIONS

GLOBAL WATER
RELIABLE - RENEWABLE - RELISABLE
214410 N. 19th Ave., Ste. 201 - Phoenix, AZ 85027
Ph: 623.580.9600 - Fx: 623.580.9659
www.gwresources.com

Drawn: MCH	Date: 07/07
App'vd: TAV	Date: 07/07
Scale: AS SHOWN	
Sheet: OF 28	
Drawing Number: M-2	

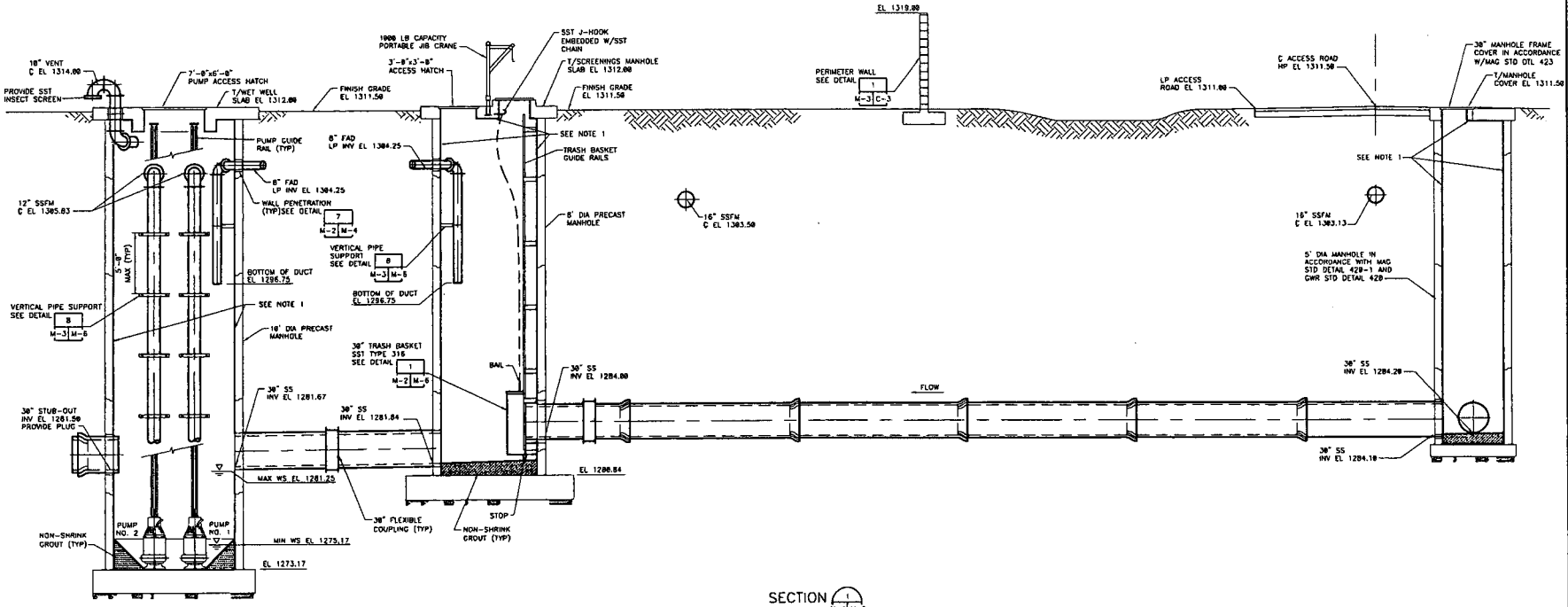

SECTION 1 M-1 M-3

SCALE = 1/4"=1'-0"

0 2 4 8

1/4" = 1'-0"

NOTES:

1. PROVIDE COATING SYSTEM ON ALL INTERNAL SURFACES OF WET WELL AND MANHOLES IN ACCORDANCE WITH SPECIFICATION SECTION 02955.

2. PROVIDE TYPE 316 STAINLESS STEEL FOR ALL FASTENERS, ANCHORS, SUPPORTS, AND HARDWARE.

3. PAINT NON SST METALLIC ITEMS IN ACCORDANCE WITH SPECIFICATION SECTION 09900.

REGISTERED PROFESSIONAL ENGINEER (CIVIL) CERTIFICATE NO. 32934 TERESA ANN VALENTINE Date Signed 07/07/07 ARIZONA, U.S.A.

THIS MARK MEASURES 1" ON ORIG. PLANS

COPYRIGHT (c) ALL RIGHTS RESERVED NOT TO BE COPIED OR REPRODUCED WITHOUT WRITTEN PERMISSION

VALENTINE CONSULTING ENGINEERS, LLC
4570 East Melrose Drive, Suite 113 Phoenix, Arizona 85018-7033
Phone: (480) 283-1991 Fax: (480) 283-4082

SOUTHEAST LIFT STATION
SECTIONS

GLOBAL WATER
RELIABLE • RENEWABLE • REUSABLE
21410 N. 19th Ave., Ste. 201 - Phoenix, AZ 85027
Ph.: 623.580.9600 - Fx: 623.580.0659
www.gwresources.com

Drawn: MCH	Date: 07/07
App'vd: TAV	Date: 07/07
Scale: AS SHOWN	
Sheet: OF 29	
Drawing Number: M-3	

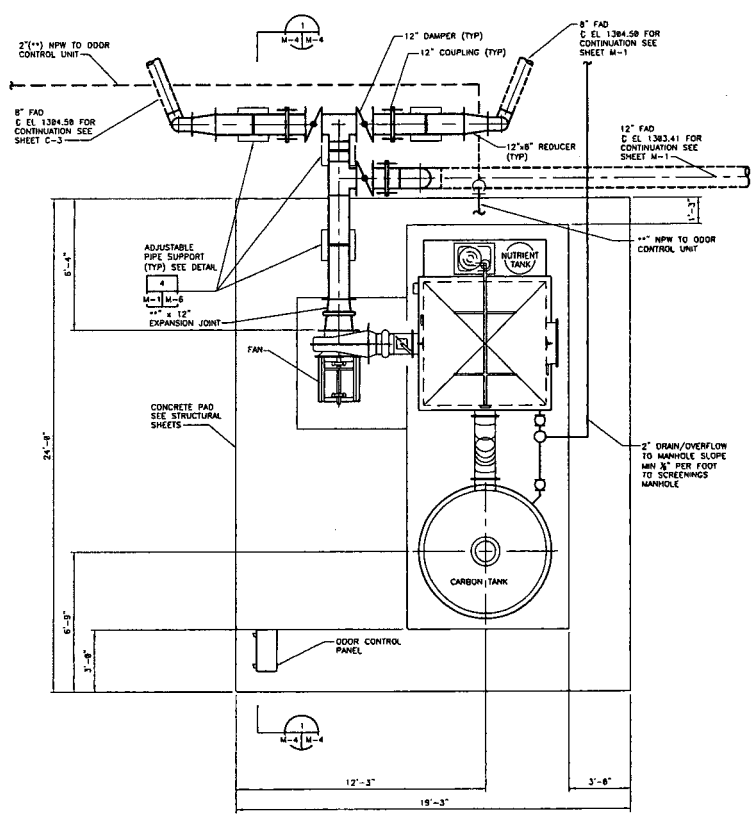

PLAN

SCALE: 3/8"=1'-0"

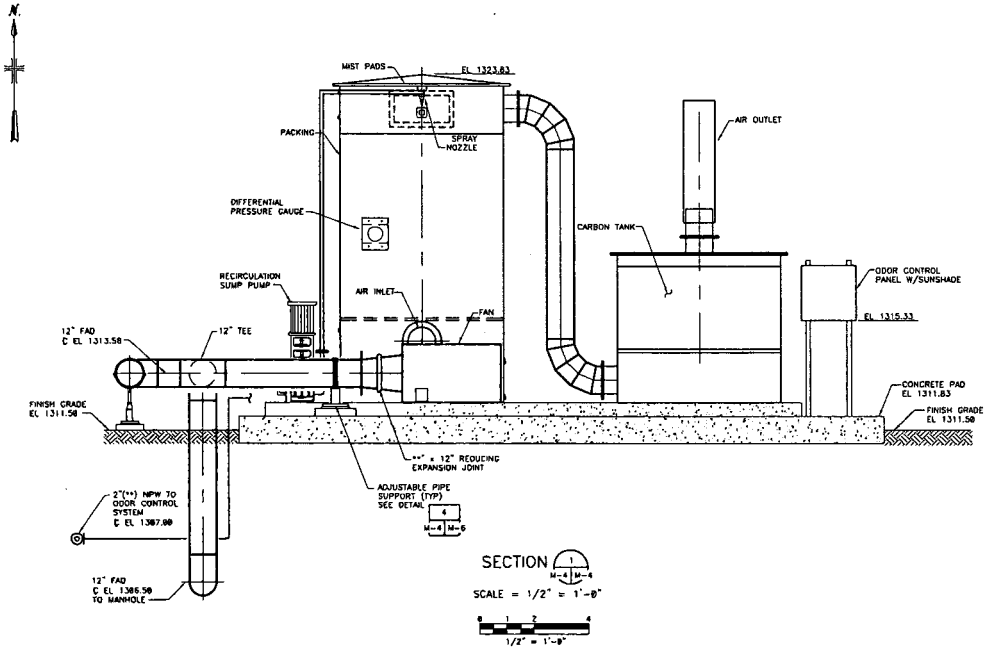

SECTION

SCALE = 1/2" = 1'-0"

1/2" = 1'-0"

THIS MARK MEASURES 1" ON ORIG. PLANS

COPYRIGHT (c) ALL RIGHTS RESERVED NOT TO BE COPIED OR REPRODUCED WITHOUT WRITTEN PERMISSION

VALENTINE ENVIRONMENTAL ENGINEERS LLC
4530 East Muirwood Drive, Suite 113 Phoenix, Arizona 85048-7833
Phone: (480) 283-4821 Fax: (480) 283-4882

SOUTHEAST LIFT STATION
ODOR CONTROL SYSTEM
PLAN AND SECTION

GLOBAL WATER
RELIABLE • RENEWABLE • RELEASABLE
21410 N. 19th Ave., Ste. 201 • Phoenix, AZ 85027
PH: 623-580-9655 • FAX: 623-580-9659
www.gwresources.com

Registered Professional Engineer (Civil) CERTIFICATE NO. 32324 TERESA ANN VALENTINE Date Signed ARIZONA, U.S.A.

Drawn: MCH	Date: 07/07
App'vd: TAV	Date: 07/07
Scale: AS SHOWN	
Sheet:	OF 29
Drawing Number: M-4	

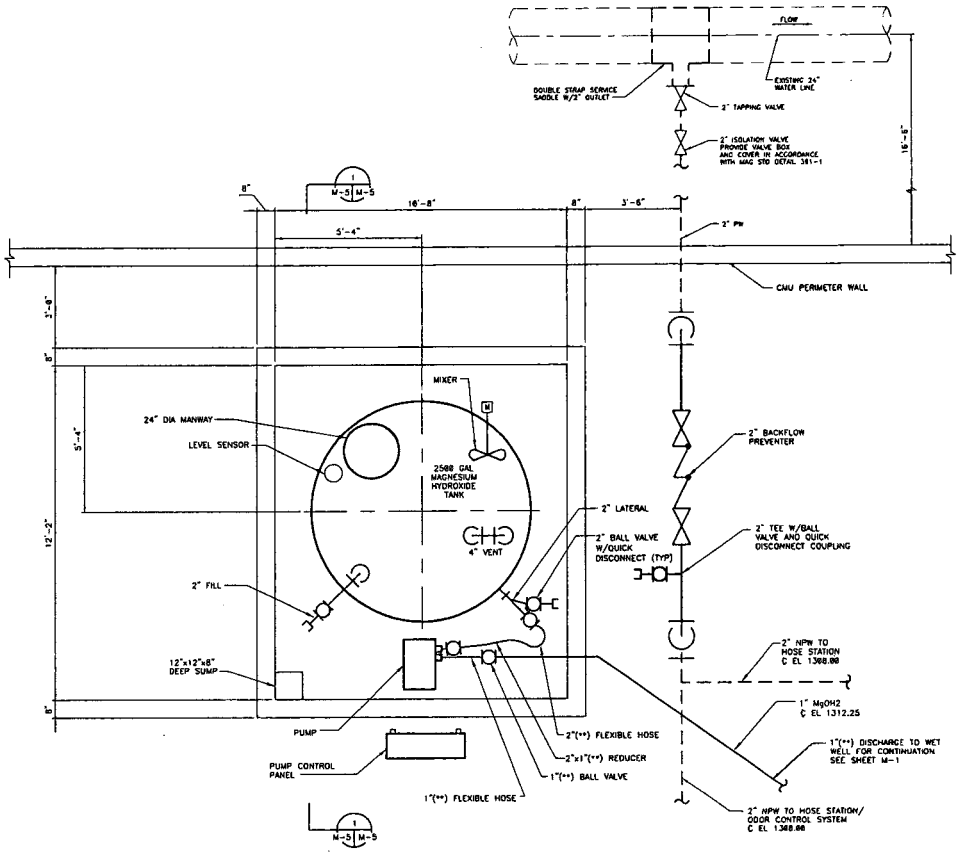

PLAN

SCALE: 1/2"=1'-0"

0 1 2 4

1/2" = 1'-0"

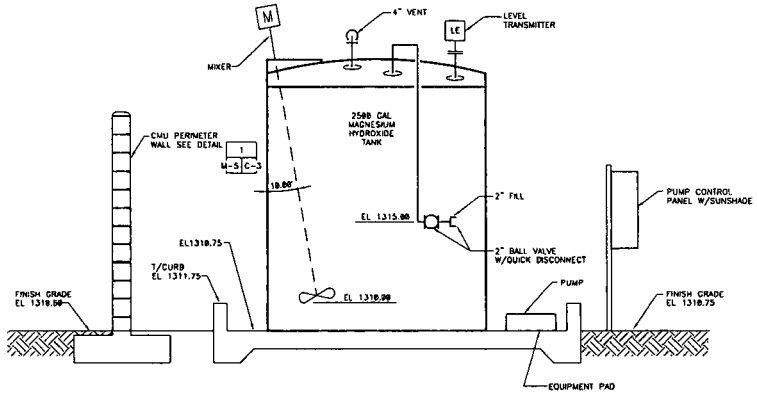

SECTION M-5 M-5

SCALE = 1/2"=1'-0"

0 1 2 4

1/2" = 1'-0"

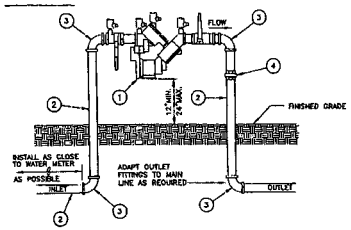

REDUCED PRESSURE PRINCIPLE BACKFLOW PREVENTION ASSEMBLY

LIST OF MATERIALS

1. APPROVED REDUCED PRESSURE PRINCIPLE BACKFLOW PREVENTION ASSEMBLY, BALL VALVES INCLUDED
2. TYPE "L" COPPER PIPE, 3/4" THRU 2"
3. 90° ELL COPPER, 3/4" THRU 2"
4. PIPE UNION, BRASS OR COPPER

DETAIL 1 M-5 M-5

NO SCALE

GENERAL NOTES:

1. CONTACT GWR, WATER QUALITY SERVICES, FOR THE LATEST LIST OF APPROVED BACKFLOW PREVENTERS OR CERTIFIED TESTERS.
2. BACKFLOW PREVENTERS MUST BE TESTED BY A CERTIFIED TESTER BEFORE A FINAL APPROVAL IS ISSUED.
3. ALL COPPER PIPE JOINTS SHALL BE SOLDERED. THE SOLDER ALLOY SHALL COMPLY W/ ASTM B 32 HAVING A SILVER CONTENT OF NOT LESS THAN 3.4% INTENDED FOR JOINING COPPER PIPES FOR POTABLE WATER SYSTEMS (GRADE SN 94, SN 95, OR SN 96). THE FLUX SHALL BE TYPE OA FOR GENERAL SOLDERING ON COPPER.
4. INSTALL A BRASS PIPE PLUG IN EACH TESTCOCK ON THE ASSEMBLY.
5. FINISHED GRADE UNDER THE BACKFLOW PREVENTER SHALL BE COMPACTED TO 95% OF MAXIMUM DENSITY.
6. PROVIDE 12-INCH MINIMUM CLEARANCE BETWEEN BACKFLOW PREVENTION ASSEMBLY AND PERMANENT STRUCTURES OR LANDSCAPE VEGETATION.

REGISTERED PROFESSIONAL ENGINEER (CIVIL) CERTIFICATE NO. 32324 TERESA ANN VALENTINE ARIZONA, U.S.A.

THIS MARK MEASURES 1" ON ORIG. PLANS

COPYRIGHT (c) ALL RIGHTS RESERVED NOT TO BE COPIED OR REPRODUCED WITHOUT WRITTEN PERMISSION

VALENTINE ENGINEERING PROPERTIES, LLC.
4530 East Indianola Drive, Suite 113 Phoenix, Arizona 85018-7803
Phone: (480) 283-6891 Fax: (480) 283-0082

SOUTHEAST LIFT STATION
MAGNESIUM HYDROXIDE SYSTEM
PLAN, SECTION AND DETAIL

GLOBAL WATER
RELIABLE - RENEWABLE - RELIABLE
21410 N. 19th Ave., Ste. 201 - Phoenix, AZ 85027
Ph: 623.580.9600 - Fx: 623.580.9659
www.gwresources.com

Drawn: MCH	Date: 07/07
App'vd: TAV	Date: 07/07
Scale: AS SHOWN	
Sheet: OF 29	
Drawing Number: M-5	

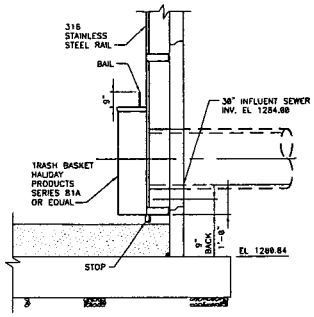

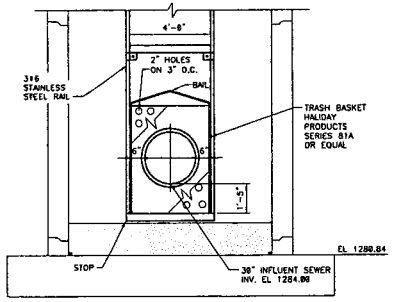

30" PIPE TRASH BASKET
DETAIL 1 (M-6 | M-6)
SCALE = NTS

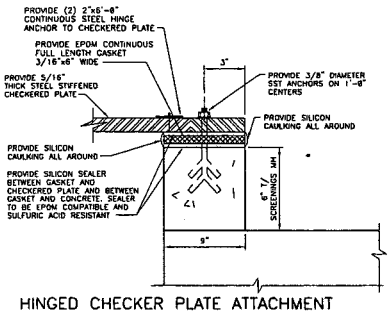

HINGED CHECKER PLATE ATTACHMENT
DETAIL 2 (M-6 | M-6)
SCALE = NTS

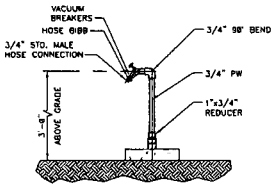

HOSE STATION
DETAIL 3 (M-6 | M-6)
SCALE = NTS

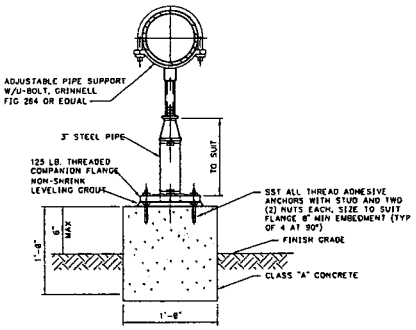

INTERIOR/EXTERIOR
ADJUSTABLE PIPE SUPPORT
DETAIL 4 (M-6 | M-6)
SCALE = NTS

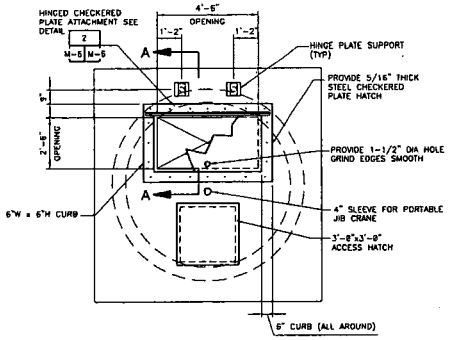

SCREENINGS MANHOLE PLAN
HINGED CHECKER PLATE HATCH
DETAIL 5 (M-6 | M-6)
SCALE = NTS

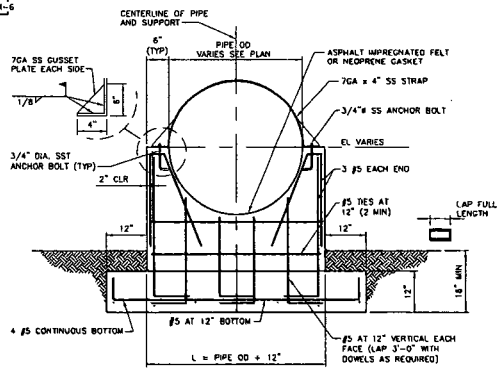

NOTE:
1. SUPPORT TO BE 12" THICK UNLESS OTHERWISE NOTED.

DETAIL 6 (M-6 | M-6)
SCALE = NTS

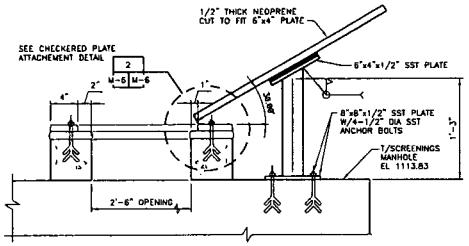

SECTION "A"-"A"
HINGED CHECKER PLATE
DETAIL 9 (M-6 | M-6)
SCALE = NTS

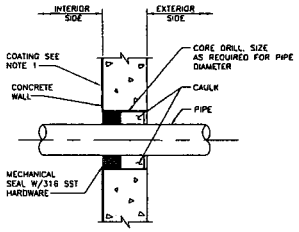

TYPICAL WALL PENETRATION
DETAIL 7 (M-6 | M-6)
SCALE = NTS

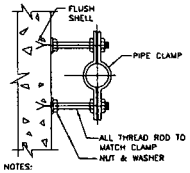

NOTES:
1. SWAY BRACE SHALL NOT SUPPORT VERTICAL LOADS.
2. SWAY BRACES SHALL BE STAINLESS STEEL
3. ALL FASTENERS AND ANCHOR BOLTS SHALL BE 316 STAINLESS STEEL

PLAN
(FOR PIPE 12" OR LESS)

VERTICAL PIPE SUPPORT
DETAIL 8 (M-6 | M-6)
SCALE = NTS

NOTES:
1. PROVIDE COATING SYSTEM ON ALL INTERNAL SURFACES OF WET WELL AND MANHOLES IN ACCORDANCE WITH SPECIFICATION SECTION 02955.
2. PROVIDE TYPE 316 STAINLESS STEEL FOR ALL FASTENERS, ANCHORS, SUPPORTS, AND HARDWARE.
3. PAINT NON SST METALLIC ITEMS IN ACCORDANCE WITH SPECIFICATION SECTION 09900.

REGISTERED PROFESSIONAL ENGINEER (INSTRUMENTATION) 32324 TERESA ANN VALENTINE ARIZONA, U.S.A.

THIS MARK MEASURES 1" ON ORIG. PLANS

COPYRIGHT (c) ALL RIGHTS RESERVED NOT TO BE COPIED OR REPRODUCED WITHOUT WRITTEN PERMISSION

VALENTINE
INSTRUMENTATION & CONTROLS LLC
4539 East Lakewood Drive, Suite 113 Phoenix, Arizona 85048-7693
Phone: (480) 282-8881 Fax: (480) 282-0082

SOUTHEAST LIFT STATION
DETAILS

GLOBAL WATER
RELIABLE • RENEWABLE • RELIGABLE
21410 N. 19th Ave., Ste. 201 Phoenix, AZ 85027
Phone: 623-580-9649 Fax: 623-580-9659
www.gwresources.com

Drawn: MCH	Date: 06/07
App'ed: TAV	Date: 06/07
Scale: AS SHOWN	
Sheet: OF	
Drawing Number: M-6	

GENERAL STRUCTURAL NOTES

APPLY UNLESS NOTED OTHERWISE ON STRUCTURAL DRAWINGS

CODE:
COMPLY WITH BUILDING CODE FOR AT GRADE CONCRETE SLABS.
COMPLY WITH ACI-350-02 AND ACI-318-01 CODES FOR PARTIALLY BELOW GRADE STRUCTURES CONTAINING WATER.

SEISMIC:
NOT APPLICABLE.

WIND:
NOT APPLICABLE.

LIVE LOADS:
PER CODES. FOR EXCEPTIONS & CLARIFICATION, SEE PLANS.

SHOP DRAWINGS:

1. THE CONTRACTOR SHALL INCLUDE IN HIS BID ALL COSTS ASSOCIATED WITH COMPLIANCE OF THE FOLLOWING PRE-SHOP DRAWING MEETING(S):
   A. CONTRACTOR SHALL SCHEDULE & CARRY OUT PRE-SHOP DRAWING MEETINGS WITH THE PROJECT STRUCTURAL ENGINEER.
   B. ALL SUCH MEETINGS SHALL BE HELD AT CONSTRUCTION SITE.
   C. EACH TRADE DETAILER REQUIRED TO SUBMIT SHOP DRAWINGS FOR STRUCTURAL REVIEW SHALL PARTICIPATE.
2. THE STRUCTURAL SHOP DRAWING REVIEW IS INTENDED TO HELP THE ENGINEER VERIFY HIS DESIGN CONCEPT. THIS REVIEW IS ONLY FOR GENERAL CONFORMANCE WITH THE DESIGN CONCEPT AND DOES NOT RELIEVE THE CONTRACTOR FROM COMPLIANCE WITH DESIGN DRAWINGS & SPECIFICATIONS ALL OF WHICH HAS A PRIORITY OVER THESE SHOP DRAWINGS. CONTRACTOR IS RESPONSIBLE FOR CONFIRMED & CORRELATED DIMENSIONS, FABRICATION PROCESSES, MEANS, METHODS, TECHNIQUES, SAFETY, AND COORDINATION OF THE WORK WITH OTHER TRADES. IT IS THE CONTRACTOR'S RESPONSIBILITY TO CHECK HIS OWN SHOP DRAWINGS AND THOSE OF HIS SUBCONTRACTORS.
3. THE STRUCTURAL SHOP DRAWINGS WILL BE RETURNED FOR RESUBMITTAL IF NOT CHECKED BY CONTRACTOR OR A CURSORY REVIEW SHOWS MAJOR ERRORS WHICH SHOULD HAVE BEEN FOUND BY THE CONTRACTOR'S CHECKING. ALL SHOP DRAWINGS SHALL INCLUDE PLAN LAYOUTS SHOWING LOCATIONS OF ITEMS DETAILED ON THE SHOP DRAWINGS. ANY CHANGES, SUBSTITUTIONS, OR DEVIATIONS FROM THE CONTRACT DOCUMENTS SHALL BE CLOUDED BY MANUFACTURER OR FABRICATOR. ANY OF THE AFOREMENTIONED WHICH ARE NOT CLOUDED OR FLAGGED BY SUBMITTING PARTIES, SHALL NOT BE CONSIDERED APPROVED AFTER ENGINEER'S REVIEW UNLESS NOTED ACCORDINGLY.
4. CONCRETE MIX DESIGNS: SUBMITTALS SHALL BE PREPARED BY OR CERTIFIED TO CONFORM TO ACI CODE BY AN INDEPENDENT TESTING LABORATORY PRIOR TO SUBMITTING TO ENGINEER. EACH SEPARATE MIX DESIGN SHALL BE INCLUDED WITH A COVER LETTER INDICATING ALL LOCATIONS ON THE PROJECT WHERE THE MIX WILL BE USED.
5. THE FOLLOWING SHOP DRAWINGS ARE NOT REQUIRED FOR SUBMITTAL FOR STRUCTURAL REVIEW:
   A. SLAB ON GRADE REBAR.
   B. STRUCTURAL STEEL MILL REPORTS.
6. FOLLOWING SHOP DRAWINGS & CALCULATIONS WHEN APPLICABLE, ARE REQUIRED FOR SUBMITTAL FOR STRUCTURAL REVIEW.
   A. SHORING AND BRACING.
   B. STRUCTURAL STEEL
   C. SPLICED REINFORCING.
   D. WELDER'S CERTIFICATION
7. ANY RESUBMITTAL OF A DETAIL SHEET WITH ADDED INFORMATION SHALL BE ACCOMPANIED BY LOCATION PLAN IDENTIFYING THE MEMBERS INVOLVED, AND CLOUDING AROUND ADDED INFORMATION.
8. DIMENSIONS WILL NOT BE CHECKED. DIMENSION CHECKING AND CHECKING OF DESIGN CHANGES PROPOSED BY CONTRACTOR WITHOUT PRIOR CONSULTATION WITH THE ENGINEER SHALL BE CHECKED ONLY IF THE CONTRACTOR WISHES THEM TO BE CHECKED AT HIS COST.
9. ANY ENGINEERING SUBMITTED FOR REVIEW SHALL BE APPROPRIATELY SEALED. FULL RESPONSIBILITY OF SUCH ENGINEERING RESTS WITH THE PERSON SEALING THE DESIGN

STRUCTURAL OBSERVATION:

1. IT IS THE CONTRACTOR'S RESPONSIBILITY TO INSPECT ALL STRUCTURAL WORK FOR CONFORMANCE WITH THE CONTRACT DOCUMENTS. ANY STRUCTURAL OBSERVATION PROVIDED BY OTHERS DOES NOT RELIEVE HIM OF THIS RESPONSIBILITY. ANY STRUCTURAL DEVIATIONS FROM THE CONTRACT DOCUMENTS THAT ARE FOUND AT A LATER DATE AND ARE DECLARED TO BE SIGNIFICANT BY THE PROJECT ENGINEER SHALL BE CORRECTED BY THE CONTRACTOR WITH ALL DISPATCH. THE STRUCTURAL OBSERVER IS NOT AUTHORIZED TO DIRECT OR APPROVE ANY CHANGES FROM THE CONTRACT DOCUMENTS. IF THE CONTRACTOR WISHES TO QUESTION THE STRUCTURAL OBSERVER'S INTERPRETATION OF THE CONTRACT DOCUMENTS, HE MAY DO SO DIRECTLY WITH THE ENGINEER. THE STRUCTURAL OBSERVER IS NOT AUTHORIZED TO STOP OR DELAY THE WORK. IF THE CONTRACTOR ELECTS TO CONTINUE WITH A CERTAIN WORK AFTER BEING NOTIFIED BY THE STRUCTURAL OBSERVER THAT SUCH WORK IS UNACCEPTABLE, HE DOES SO AT HIS OWN RESPONSIBILITY & RISKS CORRECTING THE WORK AT A LESS OPPORTUNE TIME.
2. THE STRUCTURAL OBSERVER IS NOT INSPECTING FOR OSHA COMPLIANCE & TEMPORARY CONSTRUCTION, SUCH AS BRACING. THE CONTRACTOR IS RESPONSIBLE FOR PROVIDING ADEQUATE FACILITIES FOR THE STRUCTURAL OBSERVER, TO ALLOW HIM TO PERFORM HIS WORK SAFELY AND EFFICIENTLY.

SPECIAL STRUCTURAL INSPECTION:
SPECIAL STRUCTURAL OBSERVATION BY SPECIAL OBSERVERS SATISFACTORY TO THE BUILDING OFFICIAL IS REQUIRED FOR THE FOLLOWING TYPES OF WORK IN CONFORMANCE WITH SECTION 106 AND CHAPTER 17 OF THE UNIFORM BUILDING CODE:

1. CONCRETE: DURING THE TAKING OF TEST SPECIMENS & PLACING OF REINFORCED CONCRETE EXCEPT SLABS ON GRADE.
2. BOLTS INSTALLED IN CONCRETE; DURING INSTALLATION OF EMBEDDED BOLTS IN CONCRETE WHEN STRESS INCREASES PERMITTED BY FOOTNOTE 5 OF TABLE 19-E AND DURING INSTALLATION OF EXPANSION BOLTS & EPOXY BOLTS/REBAR INTO EXISTING CONCRETE.
3. REINFORCING STEEL:
   DURING PLACING OF REINFORCING STEEL AND PLACING REINFORCING STEEL IN EPOXIED HOLES PER ITEM 2. ABOVE.
4. WELDING:
   A. DURING ALL STRUCTURAL WELDING, INCLUDING WELDING OF REINFORCING STEEL.
   INSPECTION NOT REQUIRED FOR:
      1. WELDING DONE IN AN AISC CERTIFIED FABRICATOR'S SHOP OR IN A FABRICATOR'S SHOP APPROVED IN ACCORDANCE WITH THE UNIFORM BUILDING CODE SECTION 1701.7

SCHEDULING OF SPECIAL STRUCTURAL INSPECTIONS:

1. THE CONTRACTOR SHALL ALLOW A MINIMUM OF 24 HOURS NOTIFICATION FOR THE SCHEDULES OF SPECIAL STRUCTURAL INSPECTIONS.

FOUNDATIONS:

1. SOIL REPORT BY: CONSTRUCTION INSPECTION & TESTING CO., MAY 8, 2000 FOOTINGS SHALL BEAR AT ELEVATIONS SHOWN ON DRAWINGS WITH ALLOWABLE BEARING FOOTINGS SHALL BEAR ON SOIL
2. EXCAVATION FOR BELOW GRADE STRUCTURES SHALL BE MADE EIGHT (8) INCHES BELOW DESIGN GRADE. EXPOSED SOIL SURFACE SHALL THEN BE SCARIFIED EIGHT (8) INCHES AND COMPACTED TO AT LEAST 95% OF STANDARD PROCTOR.
3. AN EIGHT (8) INCH AGGREGATE BASE COURSE (ABC) LAYER, COMPACTED TO AT LEAST 95% OF STANDARD PROCTOR, SHALL BE PLACED IMMEDIATELY BENEATH THE STRUCTURES AT OR BELOW GRADE.
4. THE ABC SHOULD CONFORM TO MAG SPECIFICATION 702, AND IS RECOMMENDED TO PREVENT PIPING IN THE SUBGRADE SOIL IN CASE OF WATER LEAKAGE FROM THE BASIN.

CONCRETE:

1. SHALL MEET ALL THE REQUIREMENTS OF ACI 301 WITH TYPE II CEMENT. MINIMUM 28 DAY STRENGTH 4,000 P.S.I., EXCEPT AS FOLLOWS:

   SIDEWALKS, CURBS, AND GUTTERS,
   SLABS ON GRADE........................2,500 P.S.I.
2. ALL CONCRETE CONSTRUCTION, UNLESS NOTED OTHERWISE, INCLUDING BENDING OF BARS, SHALL COMPLY WITH A.C.I. "BUILDING CODE REQUIREMENTS FOR REINFORCED CONCRETE" (A.C.I. 301-95)
3. NO BACKFILL SHALL BE PLACED AGAINST ANY STRUCTURE WALL UNTIL THE WALL HAS REACHED FULL STRENGTH AND THE CONNECTING SLABS HAVE BEEN CAST AND HAVE ALSO REACHED FULL STRENGTH OR WHERE PERMITTED BY THE ENGINEER.
4. ALL DETAILING, FABRICATION AND PLACING OF REINFORCING BARS, UNLESS OTHERWISE, SHALL BE IN ACCORDANCE WITH THE MANUAL OF STANDARD PRACTISE FOR DETAILING REINFORCED CONCRETE STRUCTURES A.C.I.-315 LATEST EDITION.
5. LOCATION OF ALL CONSTRUCTION JOINTS SHALL BE AS SHOWN ON THE DRAWINGS OR APPROVED BY THE ENGINEER. PLACE SLABS AND BEAMS, INCLUDING UPSET BEAMS, AT THE SAME TIME. CONSTRUCTION JOINTS SHALL BE THROUGHLY CLEANED FOR BOND. PROVIDE WATERSTOP AT ALL CONSTRUCTION JOINTS IN WATERBEARING SLABS AND WALLS.
6. REINFORCEMENT STEEL SHALL BE DEFORMED BARS CONFORMING IN QUALITY TO THE OF THE SPECIFICATIONS FOR DEFORMED BILLET-STEEL BARS FOR CONCRETE REINFORCEMENT, ASTM DESIGNATION A615, GRADE 60.
7. ALL WALL REINFORCEMENT AT CORNERS OR JUNCTIONS OF WALLS SHALL BE CONTINOUS, LAPPED OR TERMINATED IN A 90 DEGREE HOOK. ALL BARS SHALL BE DOWELED, UNLESS SHOWN OTHERWISE. ALL DOWELS SHALL BE THE SAME SIZE AND SPACING AS THE REINFORCEMENT WHICH IT IS TO BE SPLICED, UNLESS SHOWN OTHERWISE. DOWELS SHALL FIRMLY HELD IN POSITION AND SHALL NOT BE SHOVED INTO FRESHLY PLACED CONCRETE.
8. CONCRETE COVER AND REINFORCEMENT SHALL BE AS FOLLOWS:

   CONCRETE PLACED AGAINST ROUGH EARTH.............. 3"

   ALL OTHER.. 2"
9. THE REINFORCING BARS FOR ALL SLABS, BEAMS AND COLUMNS SHALL HAVE A MINIMUM EXTENSION OR ANCHORAGE INTO SUPPORTS IN ACCORDANCE WITH A.C.I. CODE (318-95).
10. BAR SUPPORTS AND SPACERS SHALL BE PROVIDED IN ACCORDANCE WITH A.C.I. CODE.
11. REINFORCING BARS AND ACCESSORIES SHALL NOT BE IN CONTACT WITH ANY PIPE, PIPE FLANGE OR METAL PARTS EMBEDDED IN CONCRETE. A MINIMUM OF 2 INCHES CLEARANCE SHALL BE PROVIDED AT ALL TIMES U.N.O.
12. STIRRUP SUPPORT BARS SHALL BE PROVIDED BETWEEN ENDS OF TOP BARS AS REQUIRED. SUPPORT BARS SHALL BE #5 MINIMUM.
13. MINIMUM CLEAR COVER FOR SPLICED REINFORCING IS GREATER THAN ONE BAR DIAMETER, AND MINIMUM CLEAR SPACING IS GREATER THAN TWO BAR DIAMETERS. SPLICE BOTTOM BAR OVER SUPPORTS AND TOP BAR AT MIDSPAN ONLY. WHERE BARS ARE SHOWN SPLICED, THEY MAY RUN CONTINUOUS AT CONTRACTOR'S OPTION.
14. ALL SPLICE LOCATIONS SUBJECT TO APPROVAL. PROVIDE REQUIRED SHOP DRAWINGS AND FABRICATE AFTER THE ENGINEER'S REVIEW. SEE SHOP DRAWING SECTION ABOVE. PLACE REBAR PER CRSI MANUAL. REBAR SPACINGS GIVEN ARE MAXIMUM ON CENTER WHETHER STATED AS "O.C." OR NOT, AND ALL REBAR IS CONTINUOUS WHETHER STATED AS "CONT." OR NOT. PROVIDE BENT CORNER REBAR TO MATCH AND LAP WITH HORIZONTAL REBARS AT CORNERS AND INTERSECTION OF WALLS, BEAMS, BOND BEAMS AND FOOTINGS PER ACI MANUAL. DOWEL ALL VERTICAL REBAR TO FOUNDATIONS. SECURELY TIE ALL REBAR, INCLUDING DOWELS, IN LOCATION BEFORE PLACING CONCRETE OR GROUT.
15. WHERE REINFORCING IS SHOWN CONTINUOUS THRU CONSTRUCTION JOINTS, LENTON FORM SAVERS DOWEL BAR SPLICE DEVICES AS MANUFACTURED BY ERICO PRODUCTS, INC. (OR EQUIVALENT) MAY BE USED. SIZES AND TYPES SHALL BE SELECTED TO DEVELOP THE FULL TENSION STRENGTH OF THE BAR PER ICBO RESEARCH REPORT.
16. TOP BARS ARE ALL HORIZONTAL BARS PLACED SO THAT MORE THAN 12 INCHES OF CONCRETE IS CAST IN THE MEMBER BELOW THE BARS.
17. MINIMUM BEARING ON WALLS: 12 INCHES FOR BEAMS, 6 INCHES FOR SLABS.
18. UNLESS SHOWN ON THE DRAWINGS THE MINIMUM REINFORCEMENT FOR ALL CONCRETE WALLS SHALL BE AS FOLLOWS:

THICKNESS	REINF. EACH WAY	LOCATION IN WALL
6"	#4 @ 12"	CENTERED
8"	#5 @ 12"	CENTERED
10"	#5 @ 12"	EACH FACE
12"	#5 @ 12"	EACH FACE

19. PROVIDE LARGER SIZES AND MORE REINFORCING IN ALL SECTIONS OF CONCRETE WHERE REQUIRED BY THE DETAILS ON THE DRAWINGS OR BY SPECIFICATIONS.
20. ALL REINFORCING TO BE WELDED SHALL BE ASTM A706. WHERE REQUIRED BY THE DETAILS ON THE DRAWINGS OR BY SPECIFICATIONS.
21. NO ADMIXTURES WITHOUT APPROVAL. ADMIXTURES CONTAINING CHLORIDES SHALL NOT BE USED. CONCRETE SHALL NOT BE IN CONTACT WITH ALUMINUM.
22. CONCRETE SHALL BE PLACED WITHIN 90 MINUTES OF BATCHING AND SHALL NOT EXCEED A TEMPERATURE OF 90 DEGREES FAHRENHEIT UNLESS PREAPPROVED BY THE ENGINEER.
23. MIX DESIGNS FOR CONCRETE CONTAINING FLY ASH SHALL BE BY AN INDEPENDENT TESTING LABORATORY. ONLY ASTM C618 CLASS F FLY ASH SHALL BE USED. FLY ASH SHALL BE BY PHOENIX CEMENT OR WESTERN ASH COMPANY.
24. THE AMOUNT OF FLY ASH USED SHALL NOT EXCEED 15 PERCENT BY WEIGHT OF THE COMBINED WEIGHT OF FLY ASH PLUS CEMENT.
25. MECHANICALLY VIBRATE ALL CONCRETE WHEN PLACED, EXCEPT THAT SLABS ON GRADE NEED BE VIBRATED ONLY AROUND EMBEDDED ITEMS. DO NOT TAMP SLABS. USE ROLLER BUG, VIBRATING SCREED OR BULL FLOAT TO FINISH. DO NOT ADD WATER TO CONCRETE AT SITE.
26. ALL REINFORCING, INCLUDING DOWELS AND ANCHOR BOLTS, SHALL BE SECURELY TIED IN LOCATION BEFORE PLACING CONCRETE OR GROUT. DOWELS WILL NOT BE ALLOWED TO BE "STABBED" IN.
27. CURE UNCOVERED SLABS ON GRADE WITH POLYETHYLENE FOR 5 DAYS. TAPE JOINTS WITH 6 INCH LAPS AND COVER WITH SAND. CURING COMPOUND FOR OTHER WORK SHALL BE COMPATIBLE WITH APPLIED FINISH, CONFORM TO ASTM C-309 AND SHALL BE CLEAR ON UNCOVERED STRUCTURE AND WHITE PIGMENTED ON COVERED STRUCTURE. APPLY AT A RATE SUFFICIENT TO RETAIN MOISTURE, BUT NOT LESS THAN 1 GALLON PER 200 SQUARE FEET.
28. THE CONTRACTOR SHALL FIX ALL CRACKS AND DISPLACEMENTS LARGER THAN 1/16" UP TO THE PROJECT COMPLETION.
29. MINIMUM STRENGTH FOR REMOVAL OF BOTTOM FORMS AND SHORING SHALL BE 75% OF SPECIFIED STRENGTH AT 28 DAYS. WALL FORMS MAY BE REMOVED IN 24 HOURS FOR MINIMUM 4,000 P.S.I. CONCRETE.
30. ALL CONCRETE WHICH DURING THE LIFE OF THE STRUCTURE WILL BE SUBJECTED TO FREEZING TEMPERATURES WHILE WET, SHALL HAVE A WATER CEMENT RATIO NOT EXCEEDING 0.53 BY WEIGHT AND SHALL CONTAIN ENTRAINED AIR AS PER ACI 301. SUCH CONCRETE SHALL INCLUDE EXTERIOR SLABS, PERIMETER FOUNDATIONS, EXTERIOR CURBS AND GUTTERS, ETC.
31. WHEN SPAN L EXCEEDS 10'- 0", CAMBER UP ALL CONCRETE BEAMS AND SLABS L/400 AT MIDSPAN. CAMBER UP ALL OVERHANGS L/300 AT EDGE OF CANTILEVER. RECORD CAMBERS AT UNDERSIDES OF STRUCTURE IMMEDIATELY BEFORE AND AFTER RESHORING AND IMMEDIATELY AFTER DESHORING.
32. HIGH-RANGE WATER REDUCING ADMIXTURE (SUPER PLASTICIZER):
    THE CONTRACTOR SHALL USE SUPER PLASTICIZER ADMIX IN LOCATIONS INDICATED ON DRAWINGS AND SHALL CONSIDER ITS USE WHERE CONGESTION OF REBAR IS LIKELY TO CAUSE ROCK POCKETS. THE CEMENT FOR THE MIX SHALL BE TYPE II. THE RATE OF PLACING SUCH CONCRETE SHALL BE REDUCED OR THE FORM STRENGTH SHALL BE INCREASED TO SAFELY RESIST INCREASED PRESSURE AGAINST FORMS.
33. THE USE OF THE ADMIX SHALL BE IN STRICT ACCORDANCE WITH THE MANUFACTURER'S SPECIFICATIONS, ASTM C494 TYPE F OR G, AND ACI RECOMMENDATIONS. DO NOT USE WITH COLORED CONCRETE.
34. MAXIMUM SLUMP MAY BE INCREASED OVER SPECIFIED SLUMP BUT SHALL NOT EXCEED 8".

STRUCTURAL STEEL:

1. ASTM A615 GRADE 60 WITH SPECIAL REQUIREMENTS PER AISC TECHNICAL BULLETIN 3 FOR ALL WIDE FLANGE SECTIONS AND ASTM A-36 FOR ALL OTHER SECTIONS HIGH HIGH STRENGTH BOLTS, ASTM A-325-N. TESTED BY A CALIBRATED WRENCH UNLESS LOAD INDICATOR BOLTS ARE USED. LATEST AISC MANUAL PARTS 1 THROUGH 4 AND AISC SPECIFICATIONS APPLY (EXCEPT SECTION A7 AND CHAPTER N) AND EXCLUDING SECTIONS 3 AND 4 OF THE 'AISC CODE OF STANDARD PRACTICE.

WELDING:

1. ALL CONSTRUCTION AND TESTING PER AMERICAN WELDING SOCIETY CODES AND RECOMMENDATIONS. ALL WELDING SHALL BE BY WELDERS HOLDING CURRENT CERTIFICATES VALIDATED BY AN INDEPENDENT LAB & HAVING CURRENT EXPERIENCE IN TYPE OF WELD CALLED FOR. THE CONTRACTOR SHALL SUBMIT WELDING CERTIFICATES FOR EACH WELDER PRIOR TO COMMENCING THE WORK.
2. WELDING RODS TO BE LOW HYDROGEN TYPE, E70 SERIES, PER AWS D1.1 TYPICALLY EXCEPT E-6010 SERIES FOR STEEL SHEET METAL PER AWS D1.3 AND REINFORCING WELDMENTS PER AWS D1.4. USE E80 SERIES WELDING RODS FOR A706 REBAR.
3. ALL FULL-PENETRATION GROOVE OR BUTT WELDED SPLICES IN MATERIAL THICKER THAN 5/16" SHALL BE INSPECTED BY AN INDEPENDENT TESTING LABORATORY, WHICH SHALL TEST ULTRASONICALLY A SUFFICIENT NUMBER OF WELDS BUT NOT LESS THAN 25 PERCENT OF TOTAL PER WELDER, TO CERTIFY ALL SPLICES AS MEETING OR EXCEEDING STRENGTH OF MATERIAL SPLICED. TWO COPIES OF ALL TEST REPORTS AND A LETTER OF SUCH CERTIFICATION SHALL BE SUBMITTED TO THE ENGINEER.
4. FIELD INDICATED WELDS MAY BE DONE IN SHOP. SHOP INDICATED WELDS MAY BE DONE IN FIELD ONLY IF APPROVED PRIOR TO CONSTRUCTION.

WATERSTOPS AT CONSTRUCTION JOINTS

1. PROVIDE WATERSTOPS WHERE SHOWN ON DRAWINGS AND AT ALL CONSRUCTION JOINTS IN PARTIALLY AND FULLY UNDERGROUND STRUCTURES.
2. PROVIDE WATERSTOPS WHERE SHOWN ON DRAWINGS AND AT ALL CONSTRUCTION JOINTS IN CONSYRUCTION EXPOSED TO TREATED AND/ OR UNTREATED WASTEWATER ON ONE SIDE.
3. SEE TYPICAL DETAILS FOR CONSTRUCTION JOINTS IN NEW CONSTRUCTION AND BETWEEN EXISTING AND NEW CONSTRUCTION.

MODIFICATION OF EXISTING CONCRETE

1. SURFACES EXPOSED TO VIEW SHALL BE NEATLY SAW CUT TO A DEPTH OF 1 1/2 INCH PRIOR TO REMOVING THE EXISTING CONCRETE. HIDDEN SURFACES SHALL RECEIVE A TOOLED JOINT BETWEEN NEW AND EXISTING CONCRETE.
2. NEW OPENINGS IN EXISTING CONCRETE SHALL BE CUT 2 INCHES OVERSIZE, COATED WITH EPOXY BONDING COMPOUND, AND MORTAR FINISHED TO THE REQUIRED FINISH SIZE. A TOOLED JOINT BETWEEN NEW AND EXISTING CONCRETE.

SUPPLEMENTARY NOTES:

1. THESE CONTRACT DOCUMENTS AND SPECIFICATIONS REPRESENT THE FINISHED STRUCTURE. THEY DO NOT INDICATE THE METHOD OF CONSTRUCTION. THE CONTRACTOR SHALL PROVIDE ALL MEASURES NECESSARY TO PROTECT THE STRUCTURE, WORKERS, AND OTHER PERSONS DURING CONSTRUCTION. SUCH MEASURES SHALL INCLUDE, BUT NOT BE LIMITED TO, MEANS AND METHODS, BRACING, SHORING, FORMS, SCAFFOLDING, GUYING OR OTHER MEANS TO AVOID EXCESSIVE STRESSES AND TO HOLD STRUCTURAL ELEMENTS IN PLACE DURING CONSTRUCTION. OBSERVATION VISITS TO THE SITE BY THE STRUCTURAL ENGINEER OR STRUCTURAL OBSERVERS SHALL NOT INCLUDE INSPECTION OF THE ABOVE ITEMS.
2. ANY MEMBERS REQUIRED TO SUPPORT EQUIPMENT FROM THE FRAMING SHOWN SHALL BE DESIGNED AND PROVIDED BY THE EQUIPMENT CONTRACTOR.
3. EXPANSION BOLTS IN CONCRETE SHOWN IN DRAWINGS SHALL BE KWIK-BOLT II OR HDI BY HILTI, OR APPROVED ALTERNATE WITH ALLOWABLE VALUES EQUAL TO OR EXCEEDING THOSE FOR HILTI, PER CURRENT ICBO RESEARCH RECOMMENDATION. EMBED 3-1/4" MINIMUM FOR 3/4" DIAMETER BOLTS. WHERE SPALLING IS ANTICIPATED DUE TO INSUFFICIENT EDGE DISTANCE, USE THREADED ANCHOR ROD EPOXIED INTO DRILLED HOLE.
4. REINFORCING OR THREADED RODS DRILLED AND EPOXIED INTO EXISTING CONCRETE ASDETAILED SHALL BE ONE OF THE FOLLOWING OR APPROVED EQUIVALENT:

   HILTI HVA/HEA ICBO #4016, 9 DIAMETERS EMBEDMENT MINIMUM
   HILTI HIT C-100 ICBO #4419, 14 DIAMETERS EMBEDMENT MINIMUM
   HILTI HSE HIGH STRENGTH EPOXY DOWELLING SYSTEM, 7 DIAMETERS EMBEDMENT MIN.
   ITW RAMSET EPCON CERAMIC 6, ICBO #4285, 9 DIAMETERS EMBEDMENT MIN.
   COVERT CIA GEL EPOXY, ICBO #4846, 9 DIAMETERS EMBEDMENT MINIMUM
   RAWL/SIKA FOIL FAST SYSTEM, 9 DIAMETERS EMBEDMENT MINIMUM
   SIKADUR, HI-MOD GEL SYSTEM, 10 DIAMETERS EMBEDMENT MINIMUM
5. INSTALLATION OF EPOXIED DOWELS SHALL FOLLOW THE STRICT RECOMMENDATIONS OF THE MANUFACTURER AND THE APPLICABLE ICBO REPORT, IF ANY.
6. EXPANSION BOLTS IN CONCRETE SHOWN IN DRAWINGS SHALL BE BY ONE OF THE FOLLOWING MANUFACTURERS OR SUBMITTED ALTERNATE FOR APPROVAL ALONG WITH ICBO APPROVAL REPORT NUMNBER:

HILTI KWIK-BOLT II	ICBO REPORT NO. 4627
ITW RAMSET / REDHEAD TRUBOLT	ICBO REPORT NO. 1372
RAWL BOLT OR STUD	ICBO REPORT NO. 4514
WEJ-IT ANKR-TITE	ICBO REPORT NO. ER-1821

7. EMBED 3-1/4" MINIMUM FOR 3/4" DIA. BOLTS. WHERE SPALLING IS ANTICIPATED DUE TO INSUFFICIENT EDGE DISTANCE, USE THREADED ANCHOR ROD EPOXIED INTO DRILLED HOLE.
8. "COMPRESSIBLE MATERIAL" SHALL BE SPONGE RUBBER.
9. OPTIONS AND APPROVED SUBSTITUTIONS ARE FOR CONTRACTOR'S CONVENIENCE. CONTRACTOR SHALL BE RESPONSIBLE FOR ALL CHANGES AND ADDITIONAL COSTS NECESSARY AND SHALL COORDINATE ALL DETAILS.
10. UNLESS NOTED OTHERWISE, DETAILS ON STRUCTURAL DRAWINGS ARE TYPICAL AS INDICATED BY CUTS, REFERENCES, OR TITLES. ALL DETAILS SHOWN SHALL BE IMPORTED INTO THE PROJECT AT ALL APPROPRIATE LOCATIONS, WHETHER SPECIFICALLY INDICATED OR NOT. TYPICAL DETAILS MAY OR MAY NOT BE REFERENCED ON THE DOCUMENTS, BUT SHALL APPLY AT ALL LOCATIONS, UNLESS NOTED OTHERWISE. WHERE NO DETAIL CUTS ARE SHOWN, CONSTRUCTION SHALL CONFORM TO SIMILAR WORK SHOWN ELSWHERE ON THE PROJECT. FOR BIDDING PURPOSES, WHERE ANY SHOWN MEMBER OR STRUCTURAL ELEMENT IS NOT SIZED ON THE DOCUMENTS, THE LARGEST SIMILAR MEMBER USED IN THE PROJECT SHALL BE UTILIZED.
11. IN CASE OF CONFLICTS, MORE COSTLY REQUIREMENTS GOVERN FOR BIDDING. SUBMIT CLARIFICATION REQUEST PRIOR TO PROCEEDING WITH WORK.
12. VERIFY ALL DIMENSIONS WITH ENGINEERING DRAWINGS.
13. CONTRACTOR SHALL ESTABLISH AND VERIFY IN FIELD ALL EXISTING CONDITIONS AFFECTING NEW CONSTRUCTION. CONTACT ENGINEER IMMEDIATELY IF EXISTING CONDITIONS ARE NOT AS DEPICTED IN DRAWINGS.
14. DRY PACK IN SPACES LARGER THAN 3/8" SHALL BE ONE PART CEMENT AND 2-1/2 PARTS SAND WITH JUST ENOUGH WATER TO HYDRATE CEMENT AND FORM A BALL SHOWING MOISTURE ON THE SURFACE WHEN SQUEEZED. IT SHALL BE RAMMED IN TIGHT TO MAXIMUM DENSITY ATTAINABLE. MINIMUM 28 DAY STRENGTH TO BE 5,000 P.S.I.
15. GROUT OTHER THAN FOR FILLING MASONRY CELLS, SHALL BE NON-SHRINK, NON-METALLIC, MEETING ASTM C-1107 GRADE B OR C, MIXED AND INSTALLED PER MANUFACTURER'S SPECIFICATIONS. THE GROUT SHALL MAINTAIN FLUID CONSISTENCY FOR 30 MINUTES WITHIN A 45°F TO 90°F TEMPERATURE RANGE. MINIMUM COMPRESSIVE STRENGTH 4,500 P.S.I. IN THREE DAYS WITH INITIAL FLUID CONSISTENCY.

ENGINEERING DESIGN TO BE PROVIDED BY CONTRACTOR:

1. THE CONTRACTOR SHALL INCLUDE IN HIS BID, CONSTRUCTION COSTS & STRUCTURAL DESIGN BY AN INSURED ARIZONA REGISTERED STRUCTURAL ENGINEER OR THE ENGINEER'S BONA FIDE EMPLOYEE FOR THE FOLLOWING PHASES OF CONSTRUCTION, IF APPLICABLE.
2. THE DESIGN ENGINEER SHALL HAVE CONTINUOUS FIVE YEARS OF EXPERIENCE IN THE TYPE OF DESIGN SUBMITTED, OR SHALL BE PREQUALIFIED BY THE ENGINEER.
   1. CORRECTIVE MEASURES FOR ERRORS IN CONSTRUCTION, WHEN SUCH MEASURES ARE ACCEPTABLE TO THE ENGINEER.
   2. SHORING AND UNDERPINNING FOR EXCAVATIONS ADJACENT TO THE EXISTING STRUCTURES USING SHEET PILING AND/OR TIE-BACKS.

Registered Professional Engineer (Civil)
CERTIFICATE NO. 33431
DAVID M. KOPCHYNSKI
ARIZONA, U.S.A.

THIS MARK MEASURES 1" ON ORIG. PLANS

COPYRIGHT (c) ALL RIGHTS RESERVED NOT TO BE COPIED OR REPRODUCED WITHOUT WRITTEN PERMISSION

VALENTINE ENVIRONMENTAL ENGINEERS LLC
4530 East Muirwood Drive, Suite 113 Phoenix, Arizona 85048-7693
Phone: (480) 283-8991 Fax: (480) 283-0082

SOUTHEAST LIFT STATION
GENERAL STRUCTURAL NOTES

GLOBAL WATER
RELIABLE · RENEWABLE · REUSABLE
21410 N. 19th Ave. · Ste. 201 · Phoenix, AZ 85027
Ph: 623.580.9600 · Fx: 623.580.9659
www.gwresources.com

Drawn: MCH	Date: 06/07
App'vd: TAV	Date: 06/07
Scale: NONE	
Sheet: OF 22	
Drawing Number: S-1	

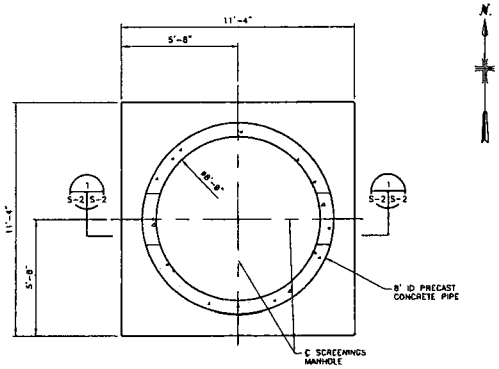

8' DIA SCREENINGS MANHOLE
SECTIONAL PLAN
SCALE: 3/8"=1'-0"

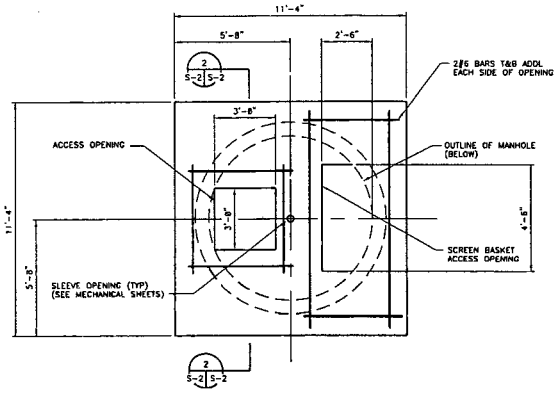

8' DIA SCREENINGS MANHOLE
TOP PLAN
SCALE: 3/8"=1'-0"

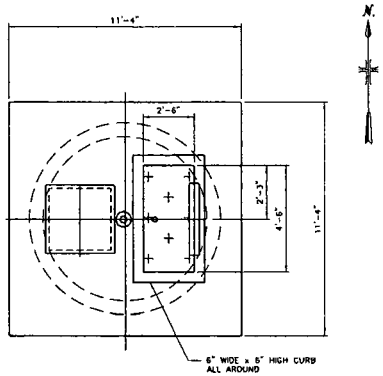

8' DIA SCREENINGS MANHOLE
CURB PLAN
SCALE: 3/8"=1'-0"

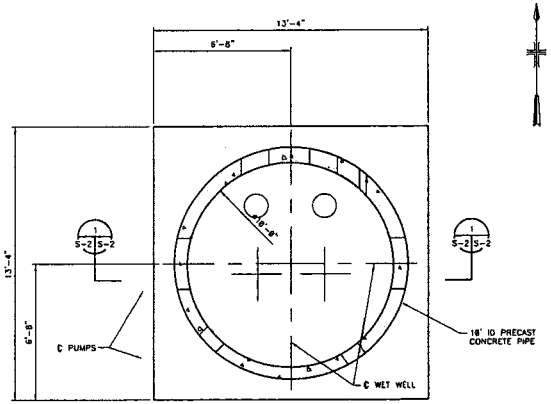

10' DIA WET WELL MANHOLE
SECTIONAL PLAN
SCALE: 3/8"=1'-0"

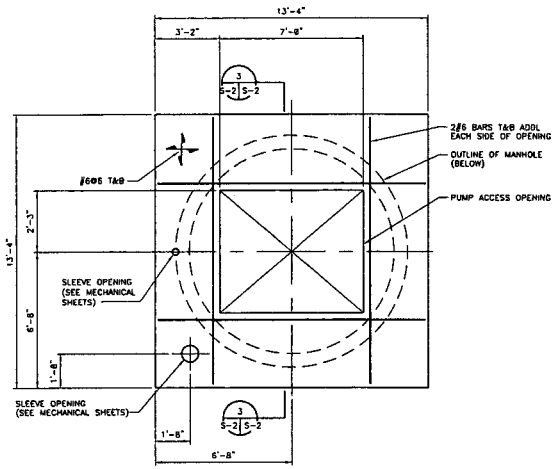

10' DIA WET WELL MANHOLE
TOP PLAN
SCALE: 3/8"=1'-0"

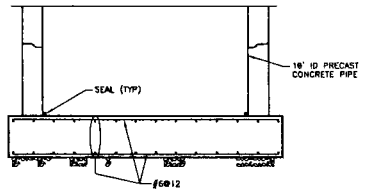

SECTION 1 S-2 S-2
SCALE = 3/8"=1'-0"

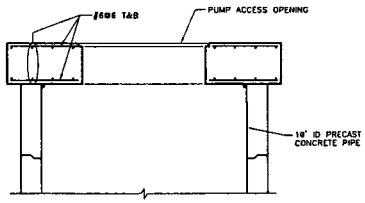

SECTION 2 S-2 S-2
SCALE = 3/8"=1'-0"

THIS MARK MEASURES 1" ON ORIG. PLANS

COPYRIGHT (c) ALL RIGHTS RESERVED
NOT TO BE COPIED OR REPRODUCED
WITHOUT WRITTEN PERMISSION

VALENTINE
INNOVATIVE, INDUSTRIAL, LLC.
4530 East Inverness Drive, Suite 113 Phoenix, Arizona 85044-7693
Phone: (480) 283-8991 Fax: (480) 283-0082

SOUTHEAST LIFT STATION
PLANS AND SECTIONS

GLOBAL WATER
RELIABLE - RENEWABLE - REUSABLE
21410 N. 19th Ave., Ste. 201 Phoenix, AZ 85027
Ph: (623) 580-0300 Fx: (623) 580-9659
www.gwresources.com

Drawn: MCH	Date: 06/07
App'vd: TAV	Date: 06/07
Scale: AS SHOWN	
Sheet: OF 22	
Drawing Number: S-2	

REGISTERED PROFESSIONAL ENGINEER (CIVIL) CERTIFICATE NO. 33131 DAVID M. KOPCHYNSKI ARIZONA, U.S.A.

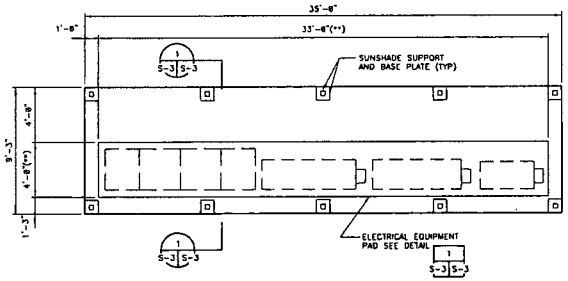

ELECTRICAL EQUIPMENT SLAB – PLAN
SCALE: 1/4"=1'-0"

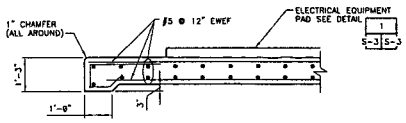

SECTION 1 S-2 S-2
SCALE = 3/8"=1'-0"

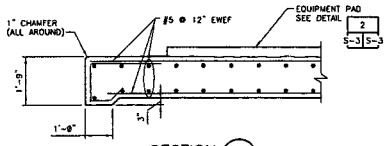

SECTION 2 S-2 S-2
SCALE = 3/8"=1'-0"

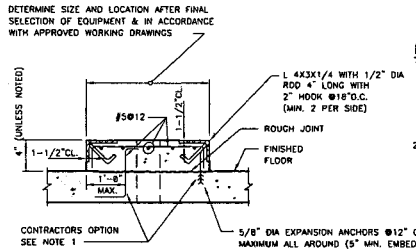

NOTES:
1. SUBSTITUTE EXPANSION ANCHOR WITH #5 REINFORCEMENT BAR (THREADED AT ONE END) FOR #5@12 DOWELS. IF REQUIRED. DO NOT DRILL THROUGH EXISTING SLAB REIFORCMENT
2. SEE ELECTRICAL DRAWINGS FOR PADS AND CONDUIT SLEEVES NOT SHOWN.

ELECTRICAL EQUIPMENT PAD DETAIL 1 S-3 S-3
NOT TO SCALE

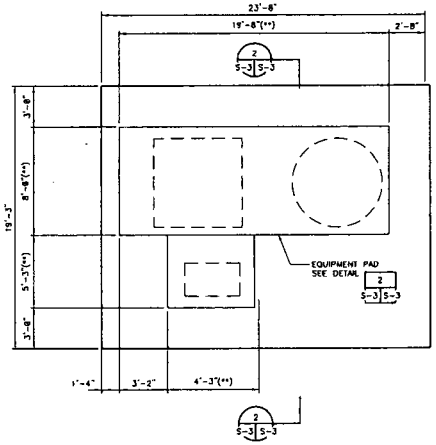

ODOR CONTROL EQUIPMENT SLAB – PLAN
SCALE: 1/4"=1'-0"

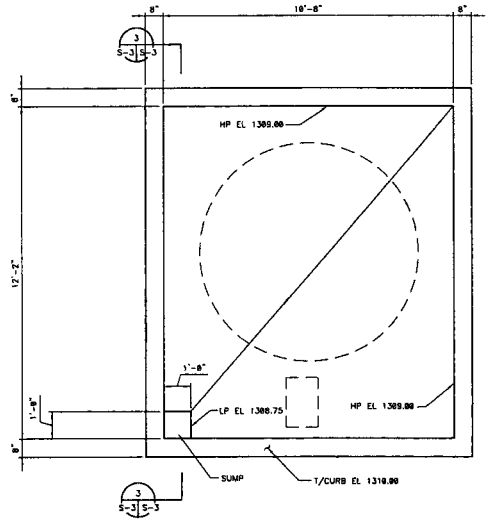

MAGNESIUM HYDROXIDE TANK CONTAINMENT PLAN
SCALE: 1/2"=1'-0"

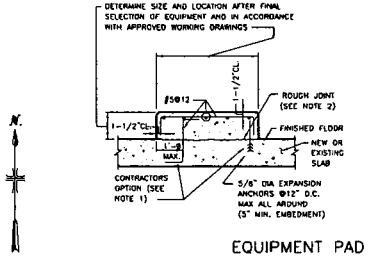

NOTES
1. PROVIDE EXPANSION ANCHORS WITH #5 REINFORCEMENT BAR (THREADED AT ONE END) IN EXISTING SLABS. SUBSTITUTE EXPANSION ANCHORS FOR #5@12 DOWELS IN NEW SLABS IF REQUIRED. DO NOT DRILL THROUGH EXISTING SLAB REINFORCMENT.
2. CLEAN JOINT BEFORE PLACING CONCRETE FOR EQUIPMENT PAD.
3. FOR EQUIPMENT PADS NOT SHOWN SEE MECHANICAL, ELECTRICAL AND HEATING & VENTILATION DRAWINGS.

EQUIPMENT PAD DETAIL 2 S-3 S-3
NOT TO SCALE

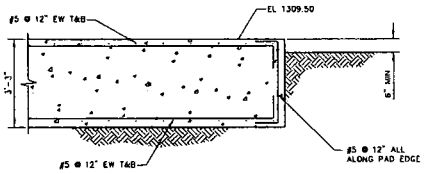

STANDBY GENERATOR EQUIPMENT PAD DETAIL 3 S-3 S-3
NOT TO SCALE

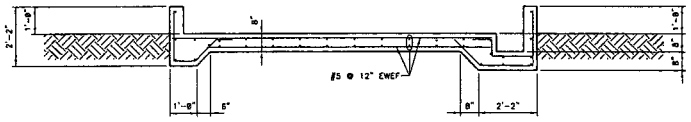

SECTION 3 S-3 S-3
SCALE = 1/2"=1'-0"

THIS MARK MEASURES 1" ON ORIG. PLANS

COPYRIGHT (c) ALL RIGHTS RESERVED NOT TO BE COPIED OR REPRODUCED WITHOUT WRITTEN PERMISSION

VALENTINE
ENVIRONMENTAL CONSULTANTS, INC.
4530 East Inverness Drive, Suite 113 Phoenix, Arizona 85048-7633
Phone: (480) 283 - 6991 Fax: (480) 283 - 0002

SOUTHEAST LIFT STATION
PLANS, SECTIONS AND DETAILS

GLOBAL WATER
RELIABLE - RENEWABLE - RELISABLE
21410 N. 19th Ave. Ste. 201 - Phoenix, AZ 85027
Ph: 623.580.9600 - Fx: 623.580.9659
www.gwresources.com

Drawn: MCH	Date: 06/07
App'ed: TAV	Date: 06/07
Scale: AS SHOWN	
Sheet: OF 22	
Drawing Number: S-3	

REGISTERED PROFESSIONAL ENGINEER (CIVIL) CERTIFICATE NO. 33431 DAVID M. KUPCHINSKI ARIZONA, U.S.A.

SCHEMATIC DIAGRAM SYMBOLS

- (CR) CONTROL RELAY
- (TD) TIME DELAY RELAY
- (AR) ALARM RELAY
- (ETM) ELAPSED TIME METER
- (M) MOTOR STARTER OR CONTACTOR COIL
- (PC) PHOTO CELL
- (R) BEACON ALARM LIGHT LETTER INDICATES COLOR R=RED, A=AMBER, B=BLUE, G=GREEN
- (R) PILOT LIGHT LETTER INDICATES COLOR R=RED, A=AMBER, B=BLUE, G=GREEN
- OUTPUT DV/DT FILTER
- HEATING ELEMENT
- TRANSFORMER
- 3 CT CURRENT TRANSFORMER
- GROUND CONNECTION
- GENERATOR
- HORN HORN
- FULL VOLTAGE NON-REVERSING (FVNR) MOTOR STARTER OR CONTACTOR NUMBER DESIGNATES NEMA SIZE
- NORMALLY OPEN CONTACT
- NORMALLY CLOSED CONTACT
- RTU OR PLC CONTACT
- HAND / AUTO XO — 2 POSITION SELECTOR SWITCH POSITION LEGEND: X=CLOSED O=OPEN
- HAND / OFF / AUTO XOO — 3 POSITION SELECTOR SWITCH HAND - OFF - AUTO POSITION LEGEND: X=CLOSED O=OPEN
- NORMALLY CLOSED PUSH BUTTON
- LOCKOUT STOP PUSH BUTTON
- NORMALLY OPEN PUSH BUTTON
- EMERGENCY STOP PUSH BUTTON (MAINTAINED)
- AMPS — DISCONNECT SWITCH SHOWN WITH RATING AND NUMBER OF POLES
- LIMIT OR POSITION SWITCH
- PSH — PRESSURE SWITCH HIGH
- PSL — PRESSURE SWITCH LOW
- FLOW SWITCH
- LEVEL FLOAT SWITCH
- TICTO — TIMER RELAY CONTACT INSTANTANEOUS CLOSE TIME DELAY OPEN
- TNOTC — TIMER RELAY CONTACT NORMALLY OPEN TIME DELAY CLOSE
- TEMPERATURE SWITCH
- FUSE
- AMPS — FUSEHOLDER OR FUSEBLOCK
- THERMAL OVERLOAD RELAY
- XX — TERMINAL BLOCK
- DEVICE LOCATED AT REMOTE LOCATION
- CONDUIT SEALOFF

POWER SINGLE LINE DIAGRAM SYMBOLS

- JUNCTION BOX WITH POWER DISTRIBUTION BLOCK OR LUGS
- CONDUIT SEALOFF
- LTC CONNECTION
- MC CONNECTION
- BOND TO METALLIC WATER PIPE
- (UM) UTILITY METER
- (HP) MOTOR, NUMBER DESIGNATES NEMA HORSEPOWER SIZE
- FUSE
- AMPS — FUSEHOLDER OR FUSEBLOCK
- AMPS / POLES — CIRCUIT BREAKER, SHOWN WITH TRIP RATING AND NUMBER OF POLES
- AMPS MCP POLES — MOTOR CIRCUIT PROTECTOR WITH TRIP RATING AND NUMBER OF POLES
- AMPS POLES — DISCONNECT SWITCH SHOWN WITH RATING AND NUMBER OF POLES
- MMR — MOTOR MANAGEMENT RELAY
- SSS — SOLID STATE STARTER
- VFD — VARIABLE FREQUENCY DRIVE
- HF — HARMONIC FILTER
- EOL — ELECTRONIC OVERLOAD RELAY
- GROUND CONNECTION

SITE PLAN SYMBOLS

- TELEPHONE OUTLET
- $ SINGLE POLE SWITCH
- $3 3 WAY SWITCH
- $4 4-WAY SWITCH
- $M MANUAL MOTOR STARTER
- SPECIAL PURPOSE OR WELDING OUTLET
- (S) SMOKE DETECTOR
- (T) THERMOSTAT
- FIELD DEVICE
- GROUND ROD
- DUPLEX RECEPTACLE
- ANTENNA MAST
- CONDUIT SEALOFF
- DISCONNECT SWITCH
- (M) MOTOR

CIRCUIT SCHEDULE LEGEND

AAA-BC
- SEQUENCE NUMBER
- TYPE C=CONTROL P=POWER
- DEVICE SERVED

ELECTRICAL ABBREVIATIONS

A	AMPERE
AFD	ADJUSTABLE FREQUENCY DRIVE
AFF	ABOVE FINISHED FLOOR
AFG	ABOVE FINISHED GRADE
AI	ANALOG INPUT
AIC	AMPS INTERRUPTING CAPACITY
AO	ANALOG OUTPUT
AS	AIR SUPPLY
ATS	AUTOMATIC TRANSFER SWITCH
BC	BYPASS CONTACTOR
C	CONDUIT
CB	CIRCUIT BREAKER
CCW	COUNTER CLOCKWISE
CL2	CHLORINE
CON	CONTACTOR
CPB	CONTROL PULLBOX
CU	COPPER, BARE
CV	CONTROL VALVE
CW	CLOCKWISE
DCS	DISTRIBUTED CONTROL SYSTEM
DI	DISCRETE INPUT
DO	DISCRETE OUTPUT
DP	DISTRIBUTION PANEL
DV/DT	DIFFERENTIAL VOLTAGE/TIME
DWG	DRAWING
ETM	ELAPSED TIME METER
EOL	ELECTRONIC OVERLOAD
EXIST	EXISTING
FA	FOUL AIR
FC	FAIL CLOSED
FE	FLOW ELEMENT
FLA	FULL LOAD AMPS
FS	FLOW SWITCH
FVNR	FULL VOLTAGE NON-REVERSING
FW	FINISHED WATER
GFCI	GROUND FAULT CIRCUIT INTERRUPTER
GFP	GROUND FAULT PROTECTION
GND	GROUND
GPD	GALLONS PER DAY
GPH	GALLONS PER HOUR
GPM	GALLONS PER MINUTE
GRS	GALVANIZED RIGID STEEL
H, HI	HIGH
H2S	HYDROGEN SULFIDE
HMI	HUMAN MACHINE INTERFACE
HOA	HAND-OFF-AUTO
HOR	HAND-OFF-REMOTE
I	CURRENT
IC	INSTRUMENTATION CABLE
ICR	INTERMITTENT CYCLE REACTOR
IO	INPUT/OUTPUT
ISC	SHORT CIRCUIT CURRENT
JB	JUNCTION BOX
L, LO	LOW
LAN	LOCAL AREA NETWORK
LC	LOOP CONTROLLER
LCL	LEVEL CONTROL, LOW
LCP	LOCAL CONTROL PANEL
LOS	LOCK-OUT-STOP
LOR	LOCAL/OFF/REMOTE
LS	LEVEL (i.e., FLOAT) SWITCH
LTC	LIQUIDTIGHT FLEXIBLE METAL CONDUIT
M	MOTOR
MA	MANUAL/AUTO
mA	MILLIAMP
MAX	MAXIMUM
MC	MANUFACTURER'S CABLE
MCB	MAIN CIRCUIT BREAKER
MCC	MOTOR CONTROL CENTER
MCP	MOTOR CIRCUIT PROTECTOR
MFR(S)	MANUFACTURER(S)
MGD	MILLION GALLONS PER DAY
MGL	MILLIGRAMS PER LITER
MH	MANHOLE
MIN	MINIMUM
MOV	MOTOR OPERATED VALVE
MMR	MOTOR MANAGEMENT RELAY
MTU	MASTER TELEMETRY UNIT
NEC	NATIONAL ELECTRICAL CODE
NECA	NATIONAL ELECTRICAL CONTRACTOR ASSOCIATION
N.C.	NORMALLY CLOSED
N.O.	NORMALLY OPEN
NOTC	NORMALLY OPEN TIMED CLOSED
NPW	NON-POTABLE WATER
NS	NITROGEN SUPPLY
NTS	NOT TO SCALE
NTU	TURBIDITY
OF	OVERFLOW
OIT	OPERATOR INTERFACE TERMINAL
OL	OVERLOAD
OLR	OVERLOAD RELAY
OO	ON/OFF (MAINTAINED)
OR	OFF-REMOTE
OSC	OPEN/STOP/CLOSE
P	PHASE
PB	PULL BOX
PCP	PROCESS CONTROL PANEL
PCV	PRESSURE CONTROL VALVE
PFR	PHASE/POWER FAILURE RELAY
PI	PULSE INPUT
PLC	PROGRAMMABLE LOGIC CONTROLLER
PLI	PLANT INFLUENT
PMP	PUMP
PNL	PANEL
PO	PULSE OUTPUT
PPB	POWER PULLBOX
PPG	POUNDS PER GALLON
PPH	POUNDS PER HOUR
PPM	PARTS PER MILLION
PR	PAIR
PRES	PRESSURE
PS	PRESSURE SWITCH
PSH	PRESSURE SWITCH, HIGH
PSI	POUNDS PER SQUARE INCH
PV	PROCESS VARIABLE
RAS	RETURN ACTIVATED SLUDGE
RW	RAW WATER
RF	RADIO FREQUENCY
RIO	REMOTE INPUT OUTPUT
RS	RAW SEWAGE
RSP	RAW SEWAGE PUMP
RST	RESET
RTD	RESISTANCE TEMPERATURE DETECTOR
RTU	REMOTE TELEMETRY UNIT
RWT	REFLECTED WAVE TRAP
SCA	SHORT CIRCUIT AMPS
SEQ	SERVICE ENTRANCE EQUIPMENT
SES	SERVICE ENTRANCE SECTION
SLC	SINGLE LOOP CONTROLLER
SLOS	START-LOCK-OUT-STOP
SMC	SUBMERSIBLE MANUFACTURER CABLE
SO2	SULFUR DIOXIDE
SP	SET POINT
SPC	SPARE CONDUIT
SPR	SPARE
SS	START/STOP
SSS	SOLID STATE STARTER (SOFT START)
ST	SHUNT TRIP
TC	TELEPHONE CABLE
TS	TEMPERATURE SWITCH
TVSS	TRANSIENT VOLTAGE SURGE SUPPRESSOR
TYP	TYPICAL
UG	UNDERGROUND
UL	UNDERWRITERS LABORATORIES
UNO	UNLESS NOTED OTHERWISE
V	VOLT
VFD	VARIABLE FREQUENCY DRIVE
W	WATT, WIRE
WAS	WASTE ACTIVATED SLUDGE
WP	WEATHERPROOF
XFMR	TRANSFORMER
XMR	TRANSFORMER
XMTR	TRANSMITTER
ZS	POSITION (i.e., LIMIT) SWITCH

ELECTRICAL LINETYPES

- EXPOSED CONDUIT
- EXISTING EXPOSED CONDUIT
- UNDERGROUND CONDUIT
- EXISTING UNDERGROUND CONDUIT
- BARE COPPER GROUND CONDUCTOR
- EXISTING OR FUTURE
- NEW ELECTRICAL EQUIPMENT
- DEMOLITION
- DETAIL VIEW OR MATCHING
- CAPPED CONDUIT STUB OUT
- PXXX / CXXX — GROUPED CONDUIT AND CIRCUIT IDENTIFICATION TAGS. REFER TO THE POWER SINGLE-LINE, SCHEMATIC CONNECTION DIAGRAMS AND CIRCUIT SCHEDULE FOR CONDUIT SIZES AND CONTENTS.

P=POWER
C=CONTROL

GENERAL NOTES

1. THE COMPLETED INSTALLATION SHALL COMPLY WITH LATEST REVISION OF APPLICABLE FEDERAL, STATE, AND LOCAL CODES, ORDINANCES, AND REGULATIONS. THE CONTRACTOR SHALL OBTAIN NECESSARY PERMITS AND INSPECTIONS REQUIRED BY THE AUTHORITIES HAVING JURISDICTION. ALL WORK SHALL BE COMPLETED IN A NEAT, WORKMANLIKE MANNER IN ACCORDANCE WITH THE LATEST NECA STANDARDS OF INSTALLATION UNDER COMPETENT SUPERVISION. INSTALL GROUNDING PER NEC.
2. VISIT THE SITE PRIOR TO BIDDING TO BECOME FAMILIAR WITH EXISTING CONDITIONS AND OTHER FACTORS, WHICH MAY AFFECT THE EXECUTION OF THE WORK. INCLUDE ALL RELATED COSTS IN THE INITIAL BID PROPOSAL.
3. THE CONTRACTOR SHALL COORDINATE WORK WITH THE UTILITIES PROVIDING SERVICES ON THIS PROJECT, AND SHALL COMPLY WITH ALL THEIR INSTALLATION REQUIREMENTS.
4. ALL MATERIALS SHALL BE NEW AND OF THE BEST QUALITY, MANUFACTURED IN ACCORDANCE WITH THE LATEST REVISION OF NEMA, ANSI, UL, OR OTHER APPLICABLE STANDARDS. THE USE OF MANUFACTURERS' NAMES, MODELS, AND NUMBERS IS INTENDED TO ESTABLISH STYLE, QUALITY, APPEARANCE, USEFULNESS, AND BID PRICE.
5. PROTECT ALL ELECTRICAL MATERIAL AND EQUIPMENT INSTALLED AGAINST DAMAGE BY OTHER TRADES, WEATHER CONDITIONS, OR ANY OTHER PREVENTABLE CAUSES. EQUIPMENT DAMAGED DURING SHIPPING OR CONSTRUCTION, PRIOR TO ACCEPTANCE BY THE ENGINEER OR THE OWNER, WILL BE REJECTED AS DEFECTIVE.
6. LEAVE THE SITE CLEAN. REMOVE ALL DEBRIS, EMPTY CARTONS, TOOLS, CONDUIT, WIRE SCRAPS AND ALL MISCELLANEOUS SPARE EQUIPMENT AND MATERIALS USED IN THE WORK DURING CONSTRUCTION. ALL COMPONENTS SHALL BE FREE OF DUST, GRIT AND FOREIGN MATERIALS, LEFT AS NEW BEFORE FINAL ACCEPTANCE OF WORK. DAMAGED PAINT AND FINISHES SHALL BE TOUCHED UP OR REPAINTED WITH MATCHING COLOR PAINT AND FINISH.
7. CIRCUIT CONDUCTORS #6 AWG OR SMALLER SHALL BE THWN STRANDED COPPER. #4 AWG THROUGH #2 AWG SHALL BE XHHW STRANDED COPPER. #1 AWG OR LARGER SHALL BE XHHW-2 STRANDED COPPER. MINIMUM POWER CONDUCTOR SIZE SHALL BE #12 AWG WITH #12 AWG GROUND.
8. UNDERGROUND CONDUITS SHALL BE SCHEDULE 40 PVC. MINIMUM CONDUIT DEPTH SHALL BE 24 INCHES. MINIMUM UNDERGROUND CONDUIT SIZE SHALL BE 1 INCH.
9. CONDUITS SHALL BE MARKED AT EACH END WITH MATCHING NUMBERED BRASS TAGS. SPARE CONDUITS SHALL HAVE A PULL STRING INSTALLED, SECURED, AND CAPPED.
10. EXPOSED CONDUITS SHALL BE GALVANIZED RIGID STEEL (GRS). MINIMUM SIZE 3/4 INCH, UNLESS OTHERWISE NOTED ON THE PLANS.
11. SAFETY SWITCHES, ELECTRICAL DISTRIBUTION EQUIPMENT, CONTROL PANELS, AND OTHER ELECTRICAL DEVICES SHALL BE UL LISTED, AND RATED FOR HEAVY DUTY SERVICE.
12. WIRING DEVICES SHALL BE SPECIFICATION GRADE.
13. THE CONTRACTOR IS RESPONSIBLE FOR MANAGING, SCHEDULING, DOCUMENTING, AND PERFORMING THE WORK SO THAT A COMPLETE ELECTRICAL, INSTRUMENTATION AND CONTROL SYSTEM FOR THE FACILITY IS PROVIDED. ACCURATE SHOP AND RECORD DRAWINGS, AND O&M MANUALS SHALL BE SUBMITTED PRIOR TO FINAL ACCEPTANCE OF THE WORK.
14. TYPICAL DETAILS SHALL APPLY IN ALL CASES, WHETHER SPECIFICALLY REFERRED TO OR NOT.

40253 BRENT ALEKSICH

DLT&V SYSTEMS ENGINEERING

THIS MARK MEASURES 1" ON ORIG. PLANS

COPYRIGHT (c) ALL RIGHTS RESERVED NOT TO BE COPIED OR REPRODUCED WITHOUT WRITTEN PERMISSION

VALENTINE
4530 East Muirwood Drive, Suite 113 Phoenix, Arizona 85048-7693
Phone: (480) 283-8991 Fax: (480) 283-0082

SOUTHEAST LIFT STATION
ELECTRICAL
SYMBOLS AND LEGENDS

GLOBAL WATER
RELIABLE · RENEWABLE · REUSABLE
21410 N. 19th Ave. - Ste. 201 - Phoenix, AZ 85027
Ph: 623.580.9600 - Fx: 623.580.9659
www.gwresources.com

Drawn: XX	Date: 06/07
App'vd: BA	Date: 06/07
Scale:	
Sheet:	OF
Drawing Number: E-001	

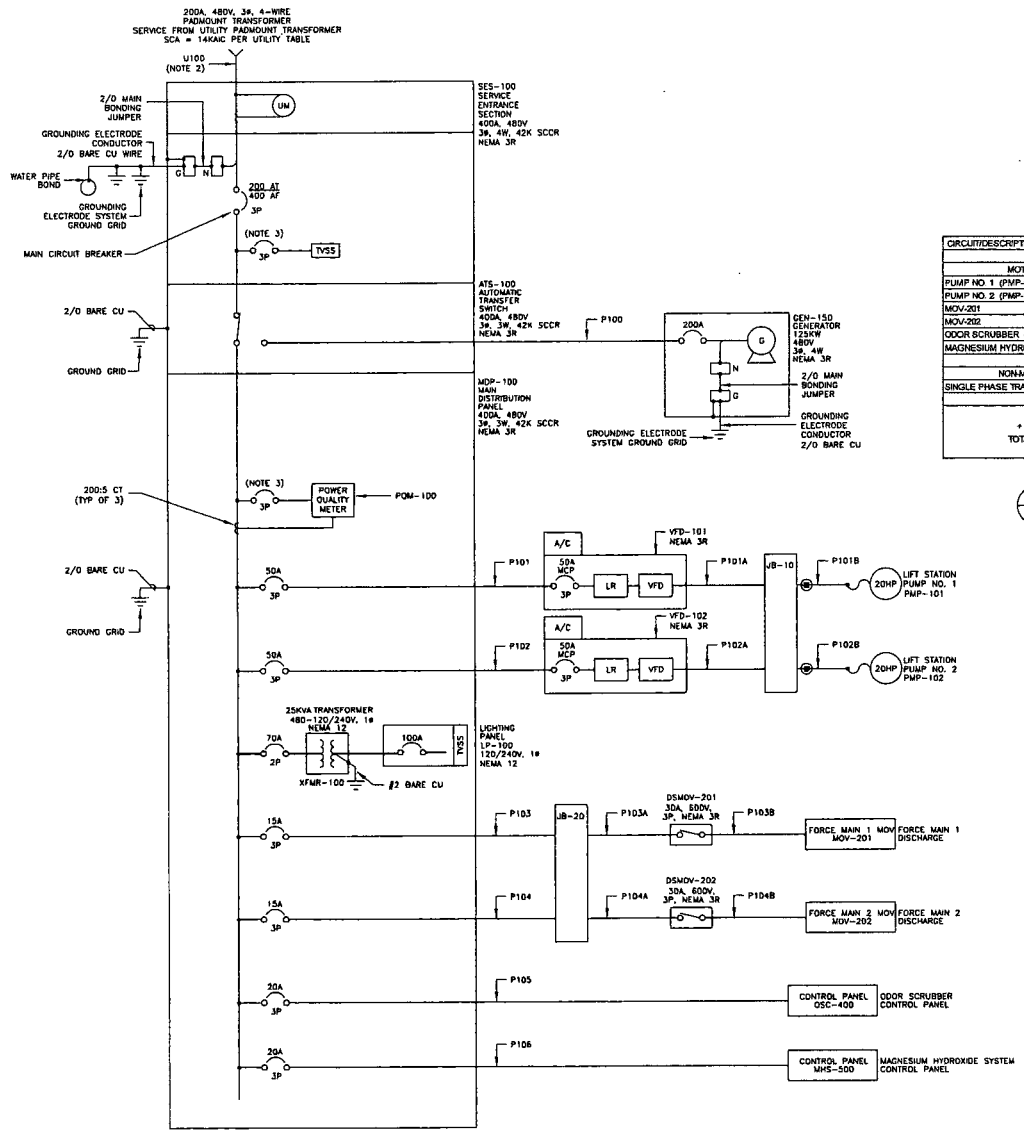

A SINGLE LINE DIAGRAM

NOTES:

1. ALL SHORT CIRCUIT INTERRUPTING AND PROTECTING DEVICES SHALL HAVE A SHORT CIRCUIT INTERRUPTING RATING EQUAL TO OR GREATER THAN THE AVAILABLE SHORT CIRCUIT ON THE BUS.
2. PROVIDE CONDUITS, TRENCHING, AND BACKFILL PER UTILITY REQUIREMENTS.
3. OVERCURRENT PROTECTION SHALL BE SIZED PER THE EQUIPMENT MANUFACTURER'S RECOMMENDATIONS.

CIRCUIT/DESCRIPTION	KVA	HP	FLA
MOTOR LOADS			
PUMP NO. 1 (PMP-101)		20.0	27.0
PUMP NO. 2 (PMP-102)		20.0	27.0
MOV-201		1.0	2.1
MOV-202		1.0	2.1
ODOR SCRUBBER (OSC-400)		5.0	7.6
MAGNESIUM HYDROXIDE SYSTEM (MHS-500)	7.2		8.7
NON-MOTOR LOADS			
SINGLE PHASE TRANSFORMER	25.0		30.1
SUBTOTAL			104.5
+ 25% OF LARGEST MOTOR			6.8
TOTAL AMPS @ 480V/3PHASE			111.3
SERVICE SIZE (AMPS)			200.0

B LOAD CALCULATIONS

CALLOUT NO.	NO. SETS	CONDUIT SIZE	CIRCUIT CONDUCTORS	CIRCUIT NO.'s
U100	PER UTILITY	PER UTILITY	PER UTILITY	PER UTILITY
P100	1	3"	3 - 4/0, #6 GND	GEN150-P1
P101	1	2"	3 - #8, #10 GND	VFD101-P1
P101A	1	2"	3 - #8, #10 GND	PMP101-P1
P101B	1	2"	3 - #8, #10 GND	PMP101-P2
P102	1	2"	3 - #8, #10 GND	VFD102-P1
P102A	1	2"	3 - #8, #10 GND	PMP102-P1
P102B	1	2"	3 - #8, #10 GND	PMP102-P2
P103	1	1"	3 - #12, #12 GND	DSMOV201-P1
P103A	1	1"	3 - #12, #12 GND	DSMOV201-P2
P103B	1	1"	3 - #12, #12 GND	MOV201-P1
P104	1	1"	3 - #12, #12 GND	DSMOV202-P1
P104A	1	1"	3 - #12, #12 GND	DSMOV202-P2
P104B	1	1"	3 - #12, #12 GND	MOV202-P1
P105	1	1"	3 - #12, #12 GND	OSC400-P1
P106	1	1"	3 - #12, #12 GND	MHS500-P1

C CIRCUIT SCHEDULE

PANEL TAG No. LP-100		NEMA TYPE/MOUNTING 12/SURFACE	
LOCATION INSIDE MDP-100		MAIN DEVICE 100A MCB	
BUS AMPACITY 100		A/C RATING 14K	
VOLTS, PHASE, WIRE 240 V/1-PHASE/3-WIRE		FED FROM XFMR-100	
REMARKS		ACCESSORIES AS REQUIRED	
		NOTE 1 SIZE PER MANUFACTURER'S REQUIREMENTS	

LOAD VA PHASE A	LOAD VA PHASE B	LOAD DESCRIPTION	WIRE SIZE	DEMAND	BKR	BKR. NO.		BKR	DEMAND	WIRE SIZE	LOAD DESCRIPTION	LOAD VA PHASE A	LOAD VA PHASE B
100		PQM-100	#12	1.25	20/1	1	2	20/1	1.25	#12	RTU	800	
	1770	POLE LIGHTS	#12	1.25	20/1	3	4	30/1	1.25	#12	RTU A/C UNIT		1350
1600		VFD-101 A/C UNIT	#12	1.25	20/1	5	6	20/1	1.25	#12	VFD-102 A/C UNIT	1600	
	3200	GEN-150 DIST. PANEL	#6	1.25	50/2	7	8	20/1	1.25	#12	POLE LIGHT RECEPTACLES		1080
3200		GEN-150 DIST. PANEL	#6	1.25		9	10	20/1	1.25	#12	SHADE STRUCTURE LIGHTS	325	
	0	SPARE			20/1	11	12	20/1			SPARE		0
0		SPARE			20/1	13	14	20/1			SPARE	0	
	0	SPARE			20/1	15	16	20/1			SPACE		0
0		SPACE			20/1	17	18	20/2			TVSS (NOTE 1)	0	
4900	4970	CONNECTED VA									CONNECTED VA	2725	2430
6125	6213	DEMAND VA									DEMAND VA	3405	3038

		VA	AMPS			
* - Each branch circuit phase conductor shall have an equipment grounding conductor sized per N.E.C. Article 250	TOTAL PANEL CONNECTED LOAD	15025	62.60	TOTAL CONNECTED VA - PER PHASE	7625	7400
	TOTAL PANEL DEMAND LOAD	18781	78.25	TOTAL DEMAND VA - PER PHASE	8531	9250
	PANEL DEMAND FACTOR	125%		TOTAL DEMAND PHASE AMPS	79.4	77.1

D LP-100 PANEL SCHEDULE

THIS MARK MEASURES 1" ON ORIG. PLANS

COPYRIGHT (c) ALL RIGHTS RESERVED NOT TO BE COPIED OR REPRODUCED WITHOUT WRITTEN PERMISSION

VALENTINE
CONSULTING ENGINEERS, INC.
4539 East Inverness Drive, Suite 113 Phoenix, Arizona 85018-7693
Phone: (480) 283-8991 Fax: (480) 283-0842

SOUTHEAST LIFT STATION
SINGLE LINE DIAGRAM
CALCULATIONS AND SCHEDULES

GLOBAL WATER
RELIABLE - RENEWABLE - REUSABLE
21410 N. 19th Ave. - Ste. 201 - Phoenix, AZ 85027
Ph: 623.580.9600 - Fx: 623.580.9609
www.gwresources.com

Drawn: XX	Date: 06/07
App'vd: BA	Date: 06/07
Scale:	
Sheet: OF	
Drawing Number: E-100	

DLT&V
SYSTEMS ENGINEERING
2550 N. CENTRAL AVE. STE. 1900
PHOENIX, AZ 85012 (602) 264-4650

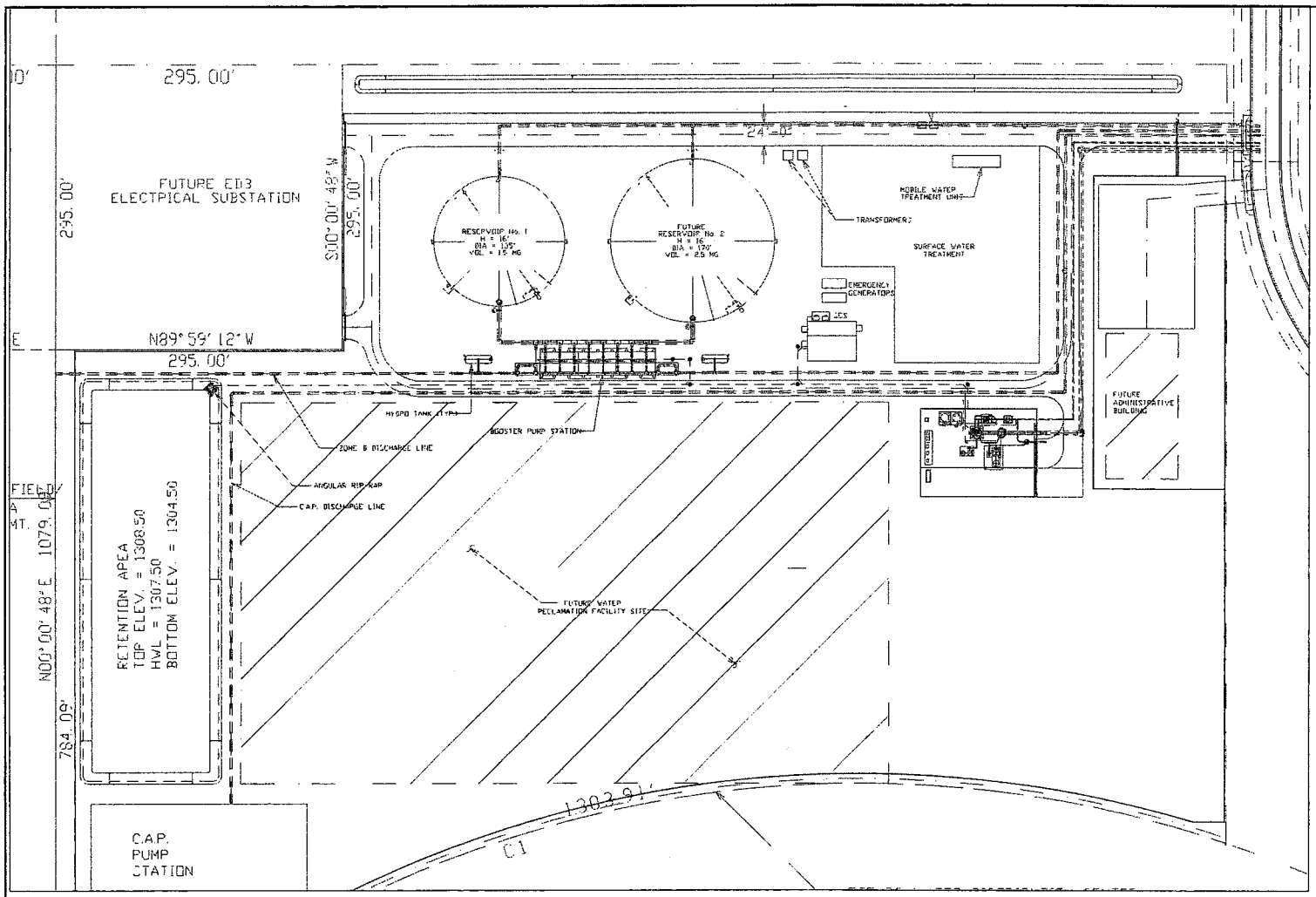

A OVERALL SITE PLAN – ELECTRICAL

0 25 50 75 100
SCALE: 1" = 50'

THIS MARK MEASURES 1" ON ORIG. PLANS

COPYRIGHT © 2007 VALENTINE, NEFF & ASSOCIATES, INC. NOT TO BE COPIED OR REPRODUCED WITHOUT WRITTEN PERMISSION

VALENTINE
ARCHITECTS ASSOCIATES, INC.
4530 East McDowell Drive, Suite 113 Phoenix, Arizona 85008-7883
Phone: (480) 283 - 8991 Fax: (480) 283 - 0002

SOUTHEAST LIFT STATION

OVERALL SITE PLAN

U:\1924_Goodfellow\Dwg\SMLS\BaseFiles\OR_Dtl_Reg.dwg
214 10 N. 19th Ave. - Ste. 201 - Phoenix, AZ 85027
Ph: 623.580.9600 - Fax: 623.580.9609
www.gwresources.com

Drawn: XX	Date: 06/07
App'vd: BA	Date: 06/07
Scale: 1" = 50'	
Sheet: XX OF XX	
Drawing Number: E-110	

DLT&V
SYSTEMS ENGINEERING
3550 N. CENTRAL AVE. STE. 1900
PHOENIX, AZ 85012 (602) 366-4659

NOTES:

1. THE WETWELL IS A CLASS 1, DIVISION 2 AREA. THE ODOR SCRUBBER AREA IS A CLASS 1, DIVISION 2 AREA EXTENDING 3' FROM ANY POTENTIAL SOURCE OF FOUL AIR LEAKAGE. THE ELECTRICAL INSTALLATION SHALL COMPLY WITH ALL REQUIREMENTS FOR CLASSIFIED AREAS AS DEFINED IN ARTICLE 500 OF THE NEC.
2. CONDUIT AND DUCTBANK ROUTES ARE NOT SHOWN ON ELECTRICAL SITE PLANS. REFER TO SINGLE LINE DIAGRAM ON SHEET #E-100 AND CONDUIT BLOCK DIAGRAMS ON SHEETS #E-130 THRU #E-133 FOR CONDUIT AND CONDUCTOR INFORMATION.
3. THE CONTRACTOR SHALL PROVIDE AND INSTALL THE CONCRETE PAD FOR THE UTILITY TRANSFORMER. REFER TO UTILITY COMPANY REQUIREMENTS FOR INSTALLATION.
4. THE CONTRACTOR SHALL PROVIDE AND INSTALL THE UTILITY COMPANY CONDUITS, TRENCHING AND BACKFILL SHALL BE PER UTILITY COMPANY REQUIREMENTS. COORDINATE THE INSTALLATION OF THE UTILITY COMPANY CONDUITS WITH THE UTILITY COMPANY.
5. CONNECT GROUND PER UTILITY COMPANY REQUIREMENTS.
6. CONTRACTOR SHALL SUBMIT ANY REQUIRED DUCTBANK AND MANHOLE SECTION DETAILS FOR ENGINEER'S REVIEW.
7. ALL CONDUIT AND DEVICE BOXES FOR WALL MOUNTED RECEPTACLES, SWITCHES, FIXTURES, ETC. SHALL BE CONCEALED.
8. ALL SHORT CIRCUIT INTERRUPTING AND PROTECTING DEVICES SHALL HAVE A SHORT CIRCUIT INTERRUPTING RATING EQUAL TO OR GREATER THAN THE AVAILABLE SHORT CIRCUIT ON THE BUS.
9. MOUNT MOTION SENSOR MIN. 5'-0" A.F.G.

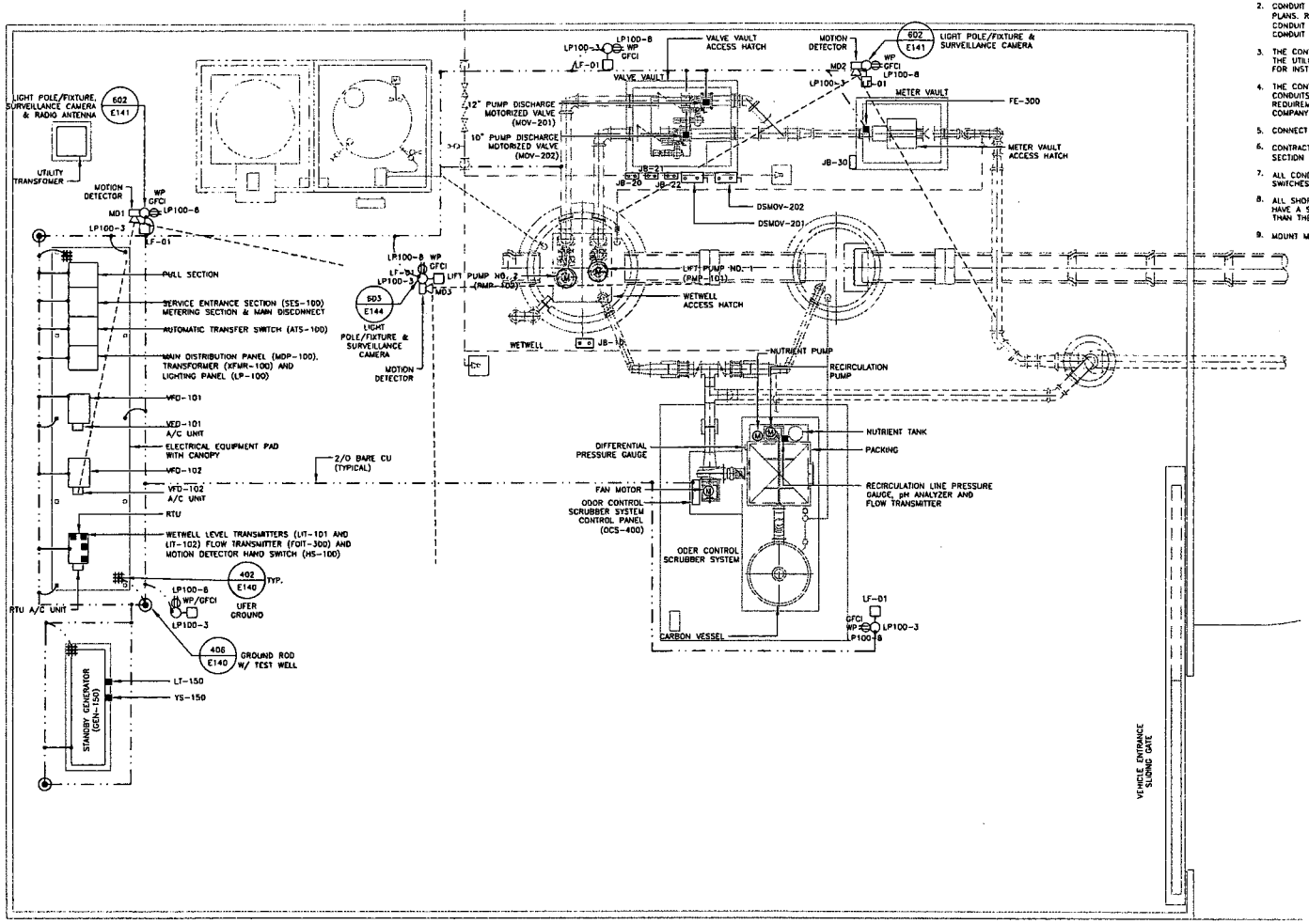

A ~ LIFT STATION LIGHTING & GRADING PLAN
3/16"=1'-0"

IMAGE	LF-TITLE	LIGHTING FIXTURE SCHEDULE					
		SYMBOL	DESCRIPTION	MOUNTING	MANUFACTURER	LAMPS	REMARKS
	LF-01		ONE PIECE EXTRUDED ALUMINUM HOUSING, ANODIZED BRONZE FINISH, TEMPERED GLASS LENS WITH SILICON GASKETED DOOR FRAME, UL LISTED FOR WET LOCATIONS.	20' POLE, 4" SQUARE, ANODIZED BRONZE, SS BOLTS, 1 LUMINAIRE ARM MOUNT	GARDCO FORM 10 SERIES, STERNER EXECUTIVE SERIES, OR EQUAL	120V, 250W MH (295 VA)	SHALL COMPLY WITH CITY, COUNTY, AND STATE DARK SKY ORDINANCES. FOR FIXTURE MOUNTING HEIGHTS, REFERENCE DETAIL SHEET.

B ~ FIXTURE SCHEDULE

THIS MARK MEASURES 1" ON ORIG. PLANS

COPYRIGHT (c) ALL RIGHTS RESERVED NOT TO BE COPIED OR REPRODUCED WITHOUT WRITTEN PERMISSION

VALENTINE ENVIRONMENTAL ENGINEERS INC.
4530 East Muirwood Drive, Suite 113 Phoenix, Arizona 85048-7393
Phone: (480) 283 - 8891 Fax: (480) 283 - 0882

SOUTHEAST LIFT STATION
LIGHTING AND
GROUNDING PLAN

U:\2824_DiessMajor\Dwg\SHLS\BasePlan\OW_CH2_Proj.dwg
Z:\419 N. 12th Ave. Ste. 201 Phoenix AZ 85027
Ph: 623.580.9456 Fax: 623.580.9458
www.gwresources.com

Drawn: XX	Date: 06/07
App'vd: BA	Date: 06/07
Scale: 3/16" = 1'	
Sheet: XX OF XX	
Drawing Number: E-111	

DLT&V
SYSTEMS ENGINEERING
3550 N. CENTRAL AVE. STE. 1900
PHOENIX, AZ 85012 (602) 248-0488

NOTES:

1. THE ENCLOSED SPACE WITHIN THE INTERIOR OF THE WETWELL IS A CLASS 1, GROUP D, DIVISION 1 AREA. ABOVE GRADE AT THE WETWELL. THE SPACE ENCLOSED WITHIN 3 FEET OF THE TOP OF THE WETWELL IS CLASSIFIED AS A CLASS 1, GROUP D, DIVISION 2 AREA. THE ODOR SCRUBBER AREA IS A CLASS 1, DIVISION 2 AREA EXTENDING 3 FEET FROM ANY POTENTIAL SOURCE OF FOUL AIR LEAKAGE. THE ELECTRICAL INSTALLATION SHALL COMPLY WITH ALL REQUIREMENTS FOR CLASSIFIED AREAS AS DEFINED IN ARTICLES 500 AND 501 OF THE NEC.
2. CONTRACTOR SHALL LEAVE ENOUGH SPACE ON EQUIPMENT PAD TO ACCOMODATE INCREASED SIZE OF FUTURE VFD ENCLOSURES.
3. REFER TO THE CONDUIT BLOCK DIAGRAM ON SHEET E-130 FOR MORE INFORMATION ON CONDUIT QUANTITIES, SIZES, AND CIRCUIT ROUTING.

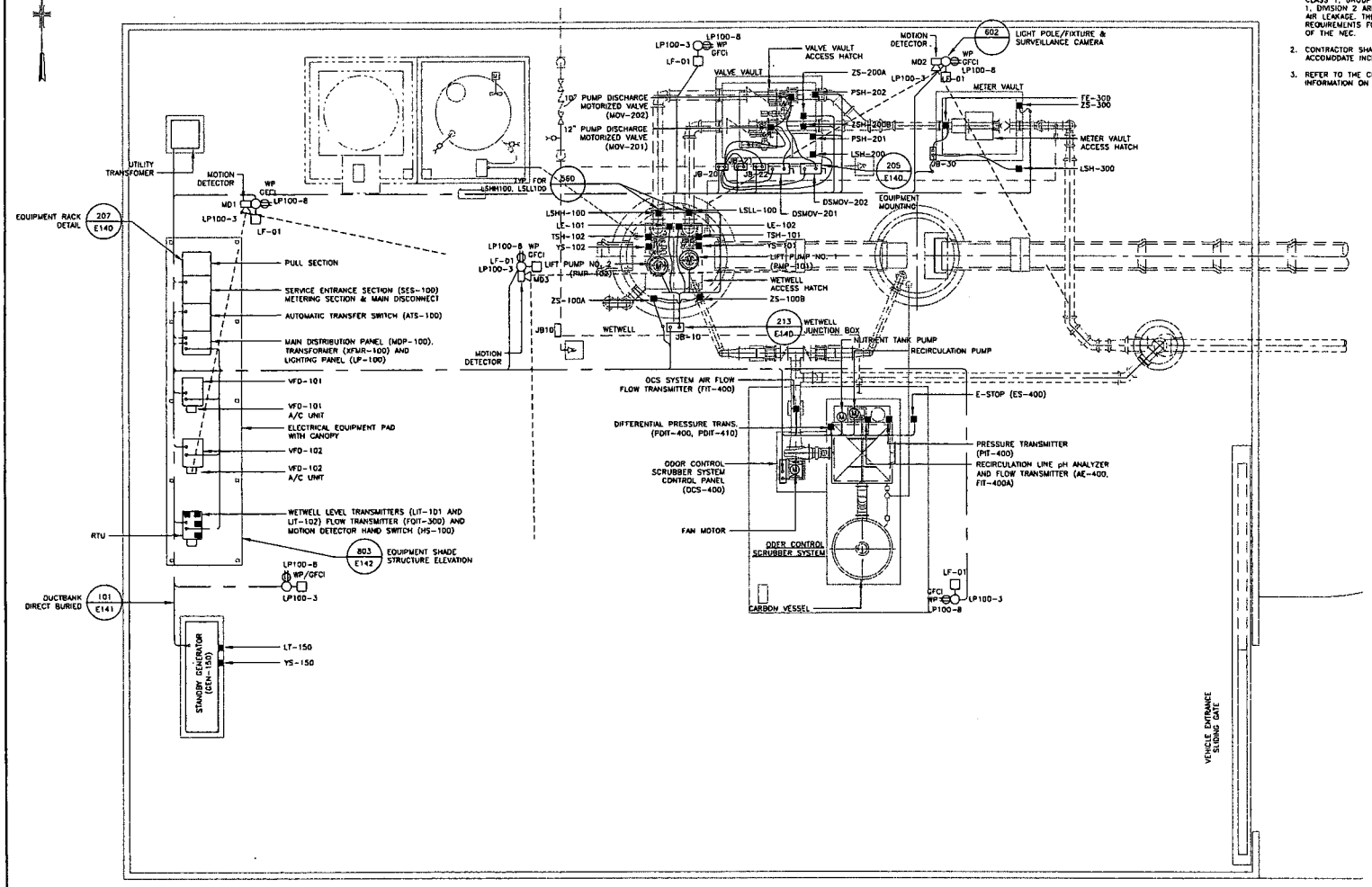

A ~ LIFT STATION POWER PLAN
3/16"=1'-0"

THIS MARK MEASURES 1" ON ORIG. PLANS

COPYRIGHT (c) ALL RIGHTS RESERVED NOT TO BE COPIED OR REPRODUCED WITHOUT WRITTEN PERMISSION

VALENTINE ENVIRONMENTAL ENGINEERS III
4539 East Halewood Drive, Suite 113 Phoenix, Arizona 85048-7693
Phone: (480) 283-1891 Fax: (480) 283-0882

SOUTHEAST LIFT STATION

POWER PLAN

U:\0624_CasaWater\Dwg\SWLS\Beatlas\UW_CH2_Top.dwg
21410 N. 19th Ave. - Ste. 201 - Phoenix, AZ 85027
Ph: 623.580.9600 - Fx: 623.580.9659
www.dltsystems.com

Drawn: XX	Date: 06/07
App'vd: BA	Date: 06/07
Scale: 3/16" = 1'	
Sheet: XX OF XX	
Drawing Number: E-112	

DLT&V SYSTEMS ENGINEERING
3550 N. CENTRAL AVE. STE. 1900
PHOENIX, AZ 85012 (602) 266-4680

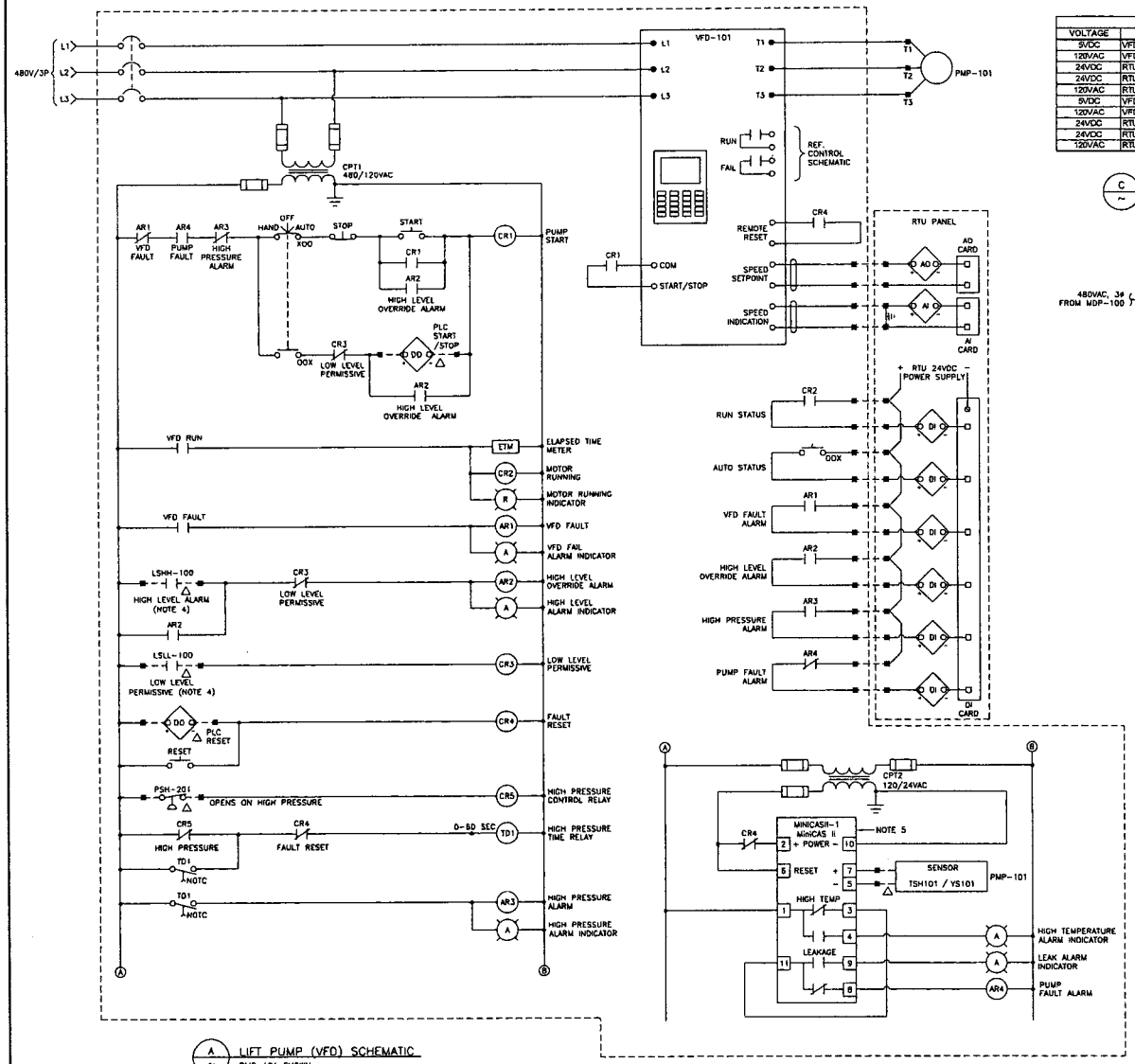

A LIFT PUMP (VFD) SCHEMATIC
PMP-101 SHOWN
PMP-102 SIMILAR

CIRCUIT SCHEDULE		
VOLTAGE	CIRCUIT NO.	CONDUCTORS
5VDC	VFD101-TSH/YS101-C1	2 - #14, #14 GND
120VAC	VFD101-PSH201-C1	2 - #14, #14 GND
24VDC	RTU-VFD101-C1	12 - #14, #14 GND
24VDC	RTU-VFD101-C2	2 - IC, #14 GND
120VAC	RTU-VFD101-C3	8 - #14, #14 GND
5VDC	VFD102-TSH/YS102-C1	2 - #14, #14 GND
120VAC	VFD102-PSH202-C1	2 - #14, #14 GND
24VDC	RTU-VFD102-C1	12 - #14, #14 GND
24VDC	RTU-VFD102-C2	2 - IC, #14 GND
120VAC	RTU-VFD102-C3	8 - #14, #14 GND

C CIRCUIT SCHEDULE

NOTES:

1. TYPICAL SCHEMATIC DIAGRAMS ARE INTENDED TO REFLECT THE GENERAL CONTROL STRATEGY. ACTUAL CIRCUITRY MAY VARY FOR SPECIFIC EQUIPMENT SUPPLIED. THE NUMBER AND TYPE OF DEVICES SHALL BE FURNISHED AS REQUIRED FOR PROPER OPERATION OF THE EQUIPMENT.
2. CONTROL POWER TRANSFORMERS (CPT) SHALL BE ADEQUATELY SIZED AND SHALL BE PROVIDED WITH PROPERLY SIZED FUSES FOR BOTH THE PRIMARY AND SECONDARY WINDINGS.
3. CONTROL FUSES SHALL BE ADEQUATELY SIZED PER THE EQUIPMENT MANUFACTURER'S RECOMMENDATIONS.
4. LSLL100 IS THE LOW LEVEL PERMISSIVE FOR THE WETWELL. LSHH100 IS THE HIGH LEVEL ALARM FOR THE WETWELL. THESE CONTACTS ORIGINATE FROM INTRINSICALLY SAFE RELAYS WITHIN THE RTU. REFER TO RTU SHOP DRAWINGS FOR ADDITIONAL INFORMATION.
5. MINICAS II IS SHOWN WITH POWER APPLIED AND NO FAULT.

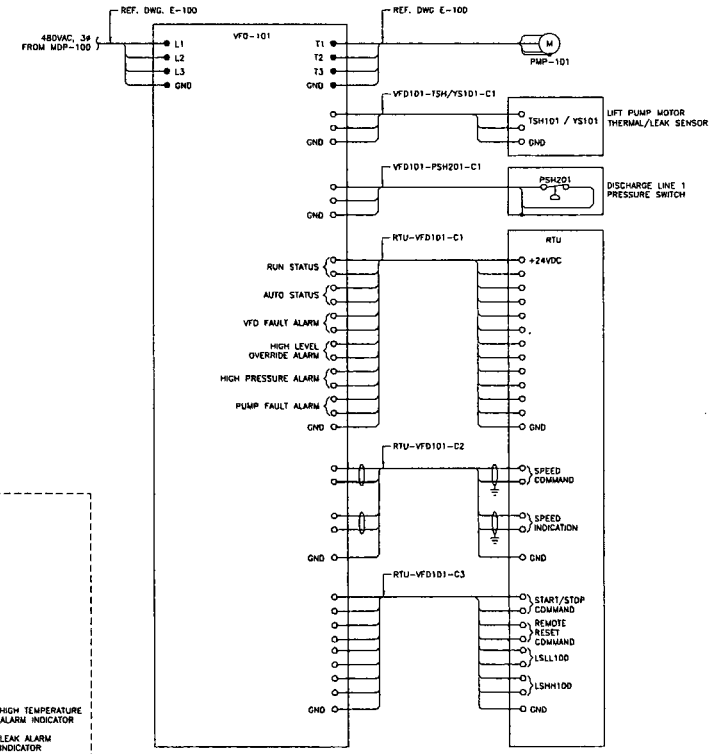

B LIFT PUMP (VFD) CONNECTION DIAGRAM
PMP-101 SHOWN
PMP-102 SIMILAR

THIS MARK MEASURES 1" ON ORIG. PLANS

COPYRIGHT (c) ALL RIGHTS RESERVED
NOT TO BE COPIED OR REPRODUCED
WITHOUT WRITTEN PERMISSION

VALENTINE
ENGINEERING & CONSULTING LLC
4539 East Indianola Drive, Suite 113 Phoenix, Arizona 85018-7032
Phone: (480) 283-8991 Fax: (480) 283-0982

SOUTHEAST LIFT STATION
TYPICAL VFD
SCHEMATIC/CONNECTION DIAGRAM

GLOBAL WATER
RELIABLE • RENEWABLE • REUSABLE
21410 N. 19th Ave. - Ste. 201 - Phoenix, AZ 85027
Ph.: 623.580.9600 - Fx: 623.580.9659
www.gwresources.com

Drawn: XX	Date: 06/07
App'vd: BA	Date: 06/07
Scale:	
Sheet: XX OF XX	
Drawing Number: E-120	

DLT&V
SYSTEMS ENGINEERING
3550 N. CENTRAL AVE. STE. 1908
PHOENIX, AZ 85012 (602) 368-4658

NOTE:

1. TYPICAL SCHEMATIC DIAGRAMS ARE INTENDED TO REFLECT THE GENERAL CONTROL STRATEGY. ACTUAL CIRCUITRY MAY VARY FOR SPECIFIC EQUIPMENT SUPPLIED. THE NUMBER AND TYPE OF DEVICES SHALL BE FURNISHED AS REQUIRED FOR PROPER OPERATION OF THE EQUIPMENT.
2. LIT-101, LIT-102 AND FQIT-300 WILL BE POWERED FROM UPS. REFER TO RTU PACKAGE FOR SCHEMATIC DIAGRAM.
3. INTRINSICALLY SAFE RELAY ISR1 & ISR2 WILL BE POWERED FROM UPS. REFER TO RTU PACKAGE FOR SCHEMATIC DIAGRAM.

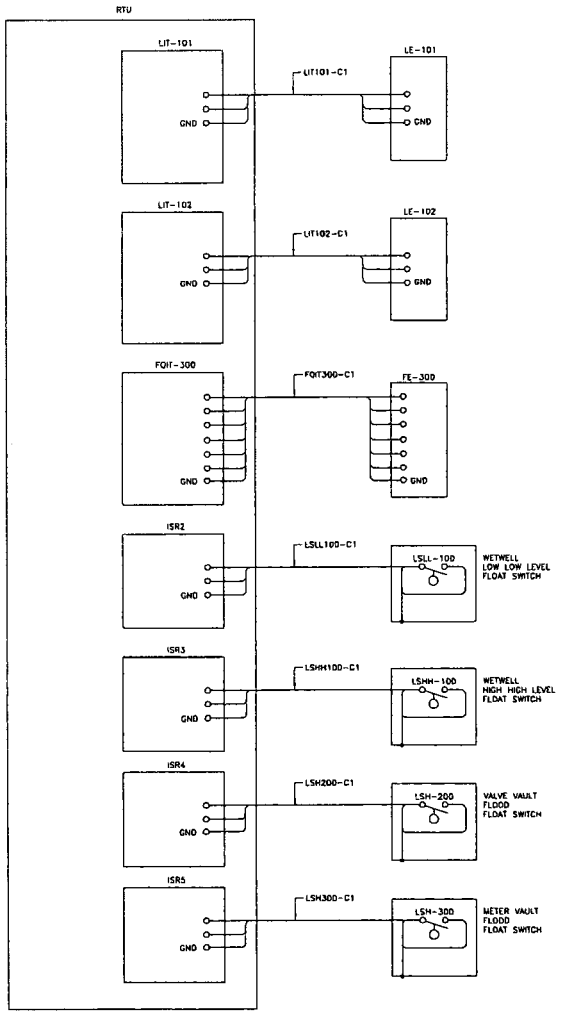

A ~ INSTRUMENT CONNECTION CONNECTION DIAGRAM

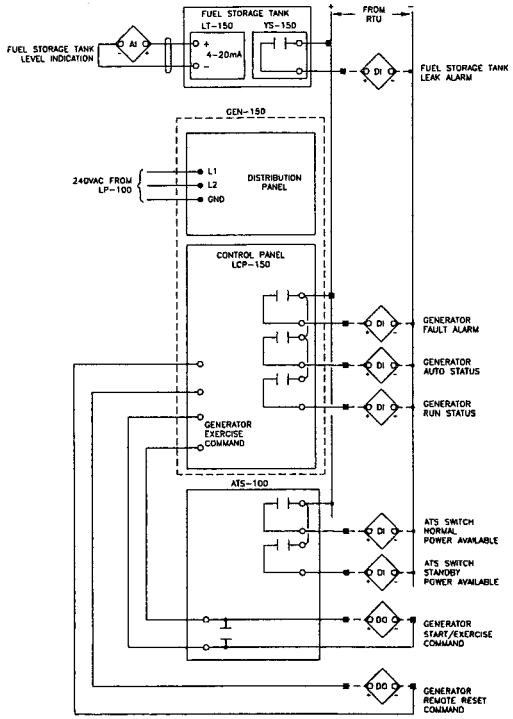

B ~ STANDBY POWER SYSTEM SCHEMATIC
GEN-150

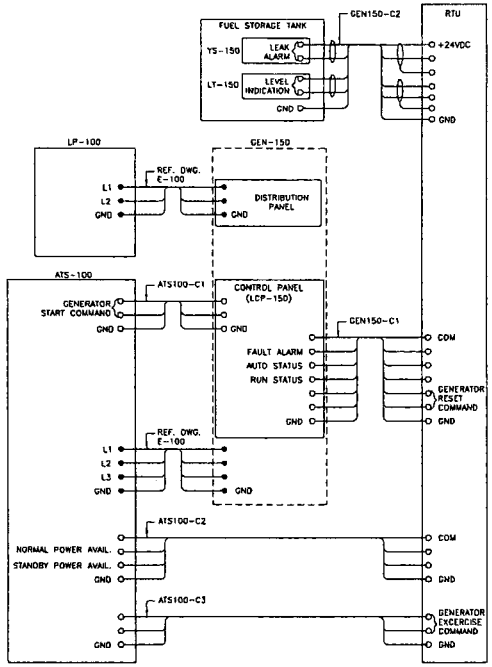

C ~ STANDBY POWER SYSTEM CONNECTION DIAGRAM
GEN-150

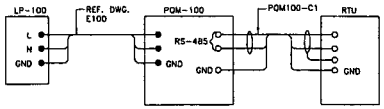

D ~ POWER QUALITY METER CONNECTION DIAGRAM
PQM-100

CIRCUIT SCHEDULE	
CIRCUIT NO.	CONDUCTORS
PQM100-C1	1-RS485 CABLE
FQIT300-C1	1-MC, #14 GND
LIT101-C1	1-MC, #14 GND
LIT102-C1	1-MC, #14 GND
LSLL100-C1	2-#14, #14 GND
LSHH100-C1	2-#14, #14 GND
LSH200-C1	2-#14, #14 GND
LSH300-C1	2-#14, #14 GND
GEN150-C1	6-#14, #14 GND
GEN150-C2	2-#C, #14 GND
ATS100-C1	2-#14, #14 GND
ATS100-C2	3-#14, #14 GND
ATS100-C3	2-#14, #14 GND

E ~ CIRCUIT SCHEDULE

THIS MARK MEASURES 1" ON ORIG. PLANS

COPYRIGHT (c) ALL RIGHTS RESERVED NOT TO BE COPIED OR REPRODUCED WITHOUT WRITTEN PERMISSION

VALENTINE MANUFACTURING SUPPLIES, INC.
4530 East Indianola Drive, Suite 113 Phoenix, Arizona 85018-7033
Phone: (602) 283 - 8991 Fax: (602) 283 - 0982

SOUTHEAST LIFT STATION
INSTRUMENT & GENERATOR
SCHEMATIC/CONNECTION DIAGRAM

GLOBAL WATER
RELIABLE • RENEWABLE • REUSABLE
21410 N. 19th Ave. • Ste. 201 • Phoenix, AZ 85027
Ph: 623.580.9630 • Fx: 623.580.9659
www.gwresources.com

Drawn: XX	Date: 06/07
App'vd: BA	Date: 06/07
Scale:	
Sheet: XX OF XX	
Drawing Number: E-121	

DLT&V
SYSTEMS ENGINEERING
3550 N. CENTRAL AVE. STE. 1900
PHOENIX, AZ 85012 (602) 266-4936

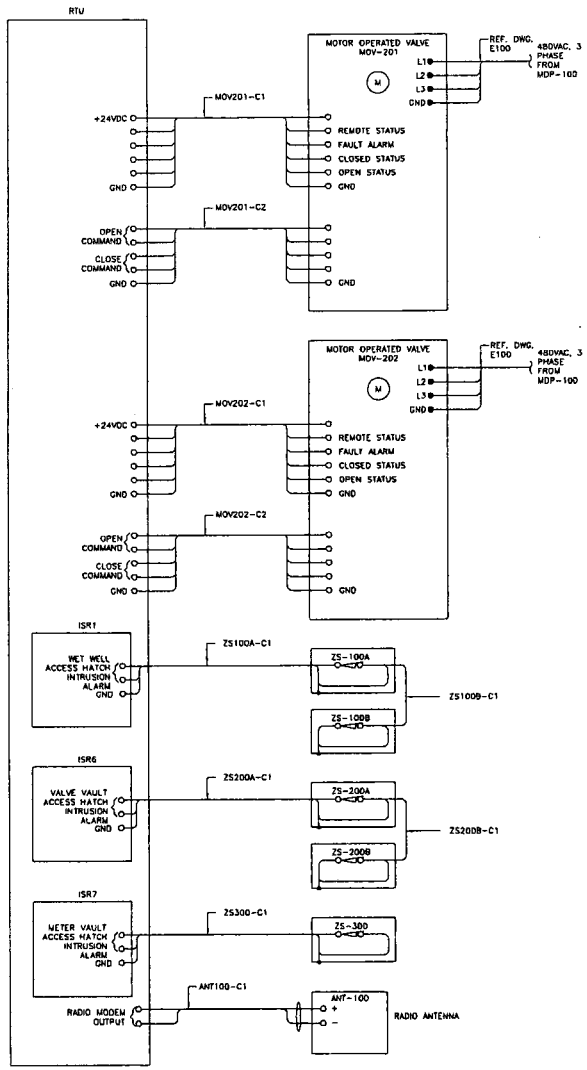

A MISCELLANEOUS DEVICE CONNECTION DIAGRAM

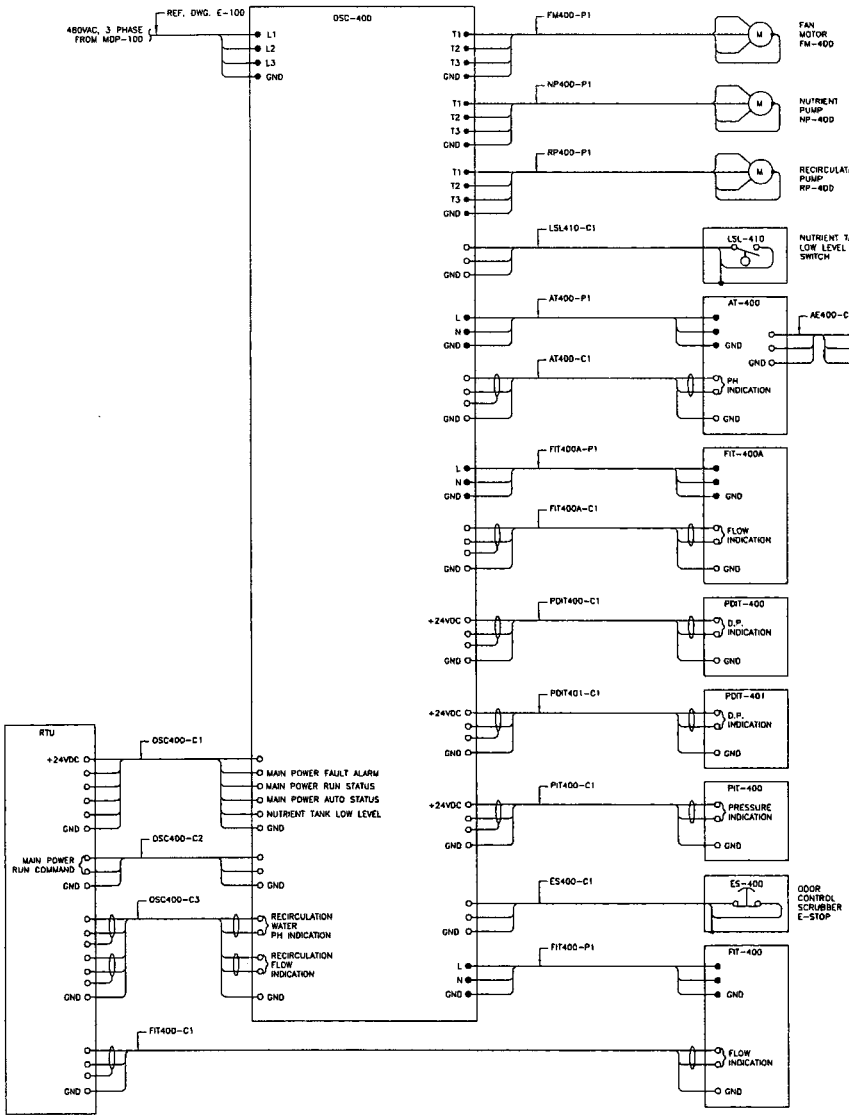

B ODOR SCRUBBER CONTROL PANEL CONNECTION DIAGRAM (OCS-400)
OCS-400

NOTES:

1. TYPICAL SCHEMATIC DIAGRAMS ARE INTENDED TO REFLECT THE GENERAL CONTROL STRATEGY. ACTUAL CIRCUITRY MAY VARY FOR SPECIFIC EQUIPMENT SUPPLIED. THE NUMBER AND TYPE OF DEVICES SHALL BE FURNISHED AS REQUIRED FOR PROPER OPERATION OF THE EQUIPMENT.

CIRCUIT SCHEDULE	
CIRCUIT NO.	CONDUCTORS
MOV201-C1	5 - #14, #14 GND
MOV201-C2	4 - #14,#14 GND
MOV202-C1	5 - #14, #14 GND
MOV202-C2	4 - #14,#14 GND
ZS100A-C1	2- #14, #14 GND
ZS100B-C1	2- #14, #14 GND
ZS200A-C1	2- #14, #14 GND
ZS200B-C1	2- #14, #14 GND
ZS300-C1	2- #14, #14 GND

A1 CIRCUIT SCHEDULE

CIRCUIT SCHEDULE	
CIRCUIT NO.	CONDUCTORS
FM400-P1	3 - #12, #12 GND
NP400-P1	2 - #12, #12 GND
RP400-P1	3 - #12, #12 GND
LSL410-C1	2 - #14, #14 GND
AT400-P1	2 - #12, #12 GND
AT400-C1	1 -IC, #14 GND
AE400-C1	1 -MC, #14 GND
FIT400A-P1	2 - #12, #12 GND
FIT400A-C1	1 -IC, #14 GND
PDIT400-C1	1 -IC, #14 GND
PDIT401-C1	1 -IC, #14 GND
PIT400-C1	1 -IC, #14 GND
ES400-C1	2 - #14, #14 GND
FIT400-P1	2 - #12, #12 GND
FIT400-C1	1 -IC, #14 GND
ANT100-C1	ANTENNA CABLE
OSC400-C1	5- #14, #14 GND
OSC400-C2	2- #14, #14 GND
OSC400-C3	2- IC, #14 GND

B1 CIRCUIT SCHEDULE

THIS MARK MEASURES 1" ON ORIG. PLANS

COPYRIGHT (c) ALL RIGHTS RESERVED NOT TO BE COPIED OR REPRODUCED WITHOUT WRITTEN PERMISSION

VALENTINE ARCHITECTS & ENGINEERS INC.
4530 East Indianola Drive, Suite 113 Phoenix, Arizona 85044-7693
Phone: (480) 283-1991 Fax: (480) 283-0082

SOUTHEAST LIFT STATION
MISCELLANEOUS
SCHEMATIC/CONNECTION DIAGRAM

GLOBAL WATER
RELIABLE • RENEWABLE • REUSABLE
21410 N. 19th Ave. - Ste. 201 - Phoenix, AZ 85027
Ph: 623.580.8500 - Fx: 623.580.9659
www.gwresources.com

Drawn: XX	Date: 06/07
App'vd: BA	Date: 06/07
Scale:	
Sheet: XX OF XX	
Drawing Number: E-122	

DLT&V
SYSTEMS ENGINEERING
3550 N. CENTRAL AVE. STE. 1900
PHOENIX, AZ 85012 (602) 248-4488

NOTES:

1. TYPICAL SCHEMATIC DIAGRAMS ARE INTENDED TO REFLECT THE GENERAL CONTROL STRATEGY. ACTUAL CIRCUITRY MAY VARY FOR SPECIFIC EQUIPMENT SUPPLIED. THE NUMBER AND TYPE OF DEVICES SHALL BE FURNISHED AS REQUIRED FOR PROPER OPERATION OF THE EQUIPMENT.

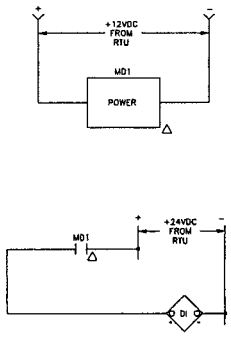

A MOTION SENSOR SCHEMATIC
MD1 SHOWN
MD2 SIMILAR
MD3 SIMILAR

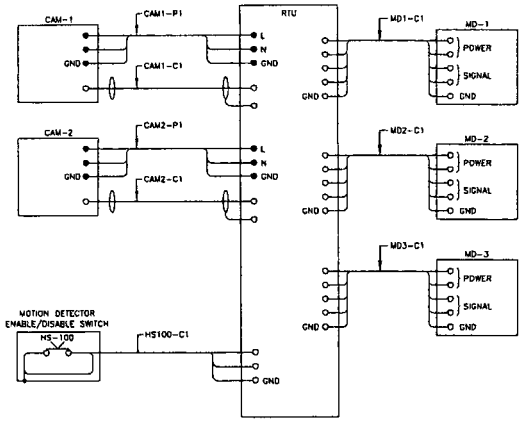

B MOTION SENSOR AND CAMERA CONNECTION DIAGRAM

CIRCUIT SCHEDULE	
CIRCUIT NO.	CONDUCTORS
CAM1-P1	2 - #12, #12 GND
CAM1-C1	1 - CAT5E SHIELDED CABLE
CAM2-P1	2 - #12, #12 GND
CAM2-C1	1- CAT5E SHIELDED CABLE
HS100-C1	2 - #14, #14 GND
MD1-C1	4 - #14, #14 GND
MD2-C1	4 - #14, #14 GND
MD3-C1	4 - #14, #14 GND

C CIRCUIT SCHEDULE

THIS MARK MEASURES 1" ON ORIG. PLANS

COPYRIGHT (c) ALL RIGHTS RESERVED
NOT TO BE COPIED OR REPRODUCED
WITHOUT WRITTEN PERMISSION

VALENTINE
CONSULTING ENGINEERS INC.
4539 East Halmond Drive, Suite 113 Phoenix, Arizona 85048-7693
Phone: (480) 283 - 8591 Fax: (480) 283 - 0082

SOUTHEAST LIFT STATION
SECURITY SYSTEMS
SCHEMATIC/CONNECTION DIAGRAM

GLOBAL WATER
RELIABLE • RENEWABLE • REUSABLE
21410 N. 19th Ave. • Ste. 201 • Phoenix, AZ 85027
Ph: 623.580.9500 • Fax: 623.580.9459
www.globalwaterusa.com

Drawn: XX	Date: 06/07
App'vd: BA	Date: 06/07
Scale:	
Sheet: XX OF XX	
Drawing Number: E-123	

DLT&V
SYSTEMS ENGINEERING
3550 N. CENTRAL AVE. STE. 1800
PHOENIX, AZ 85012 (602) 560-4058

NOTES:

1. TYPICAL SCHEMATIC DIAGRAMS ARE INTENDED TO REFLECT THE GENERAL CONTROL STRATEGY. ACTUAL CIRCUITRY MAY VARY FOR SPECIFIC EQUIPMENT SUPPLIED. THE NUMBER AND TYPE OF DEVICES SHALL BE FURNISHED AS REQUIRED FOR PROPER OPERATION OF THE EQUIPMENT.

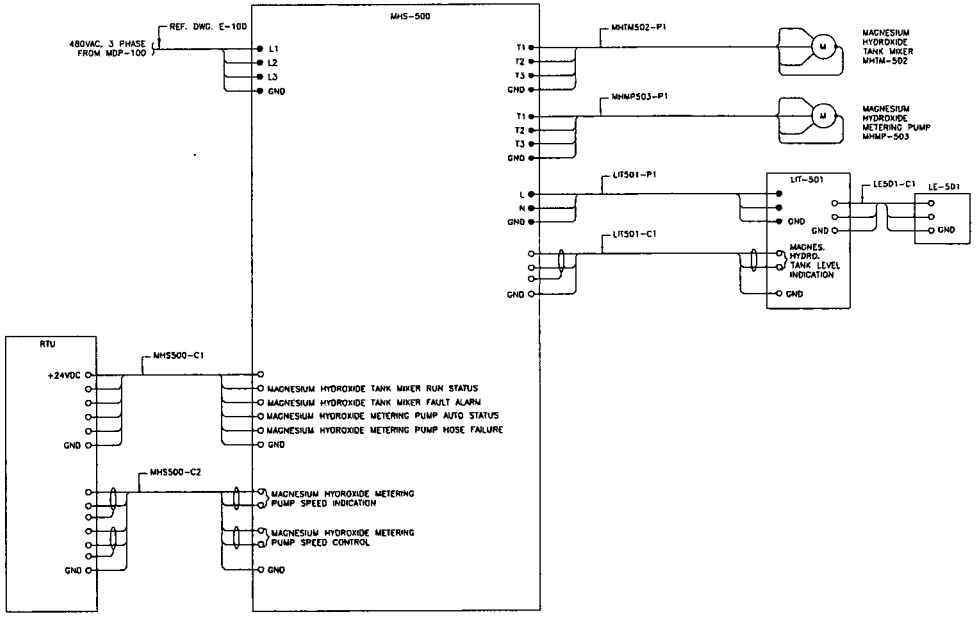

A — MAGNESIUM HYDROXIDE SYSTEM CONNECTION DIAGRAM (MHS-500)
MHS-500

CIRCUIT SCHEDULE	
CIRCUIT NO.	CONDUCTORS
MHTM502-P1	5 - #12, #12 GND
MHMP503-P1	3 - #12, #12 GND
LIT501-P1	2 - #12, #12 GND
LIT501-C1	1 -IC, #14 GND
LE501-C1	1 -MC, #14 GND
MHS500-C1	3- #14, #14 GND
MHS500-C2	2- IC, #14 GND

B — CIRCUIT SCHEDULE

THIS MARK MEASURES 1" ON ORIG. PLANS

COPYRIGHT (c) ALL RIGHTS RESERVED NOT TO BE COPIED OR REPRODUCED WITHOUT WRITTEN PERMISSION

VALENTINE ENVIRONMENTAL ENGINEERS INC.
4539 East Indianola Drive, Suite 113 Phoenix, Arizona 85018-7633
Phone: (480) 283-6991 Fax: (480) 283-0082

SOUTHEAST LIFT STATION
MHS-500
SCHEMATIC/CONNECTION DIAGRAM

GLOBAL WATER
RELIABLE • RENEWABLE • REUSABLE
21410 N. 19th Ave., Ste. 201 • Phoenix, AZ 85027
Ph: 623.580.9600 Fx: 623.580.9659
www.globalwaterpartners.com

Drawn: XX	Date: 06/07
App'vd: BA	Date: 06/07

Scale:

Sheet: XX OF XX

Drawing Number: E-124

DLT&V
SYSTEMS ENGINEERING
3550 N. CENTRAL AVE. STE. 1900
PHOENIX, AZ 85012 (602) 266-4656

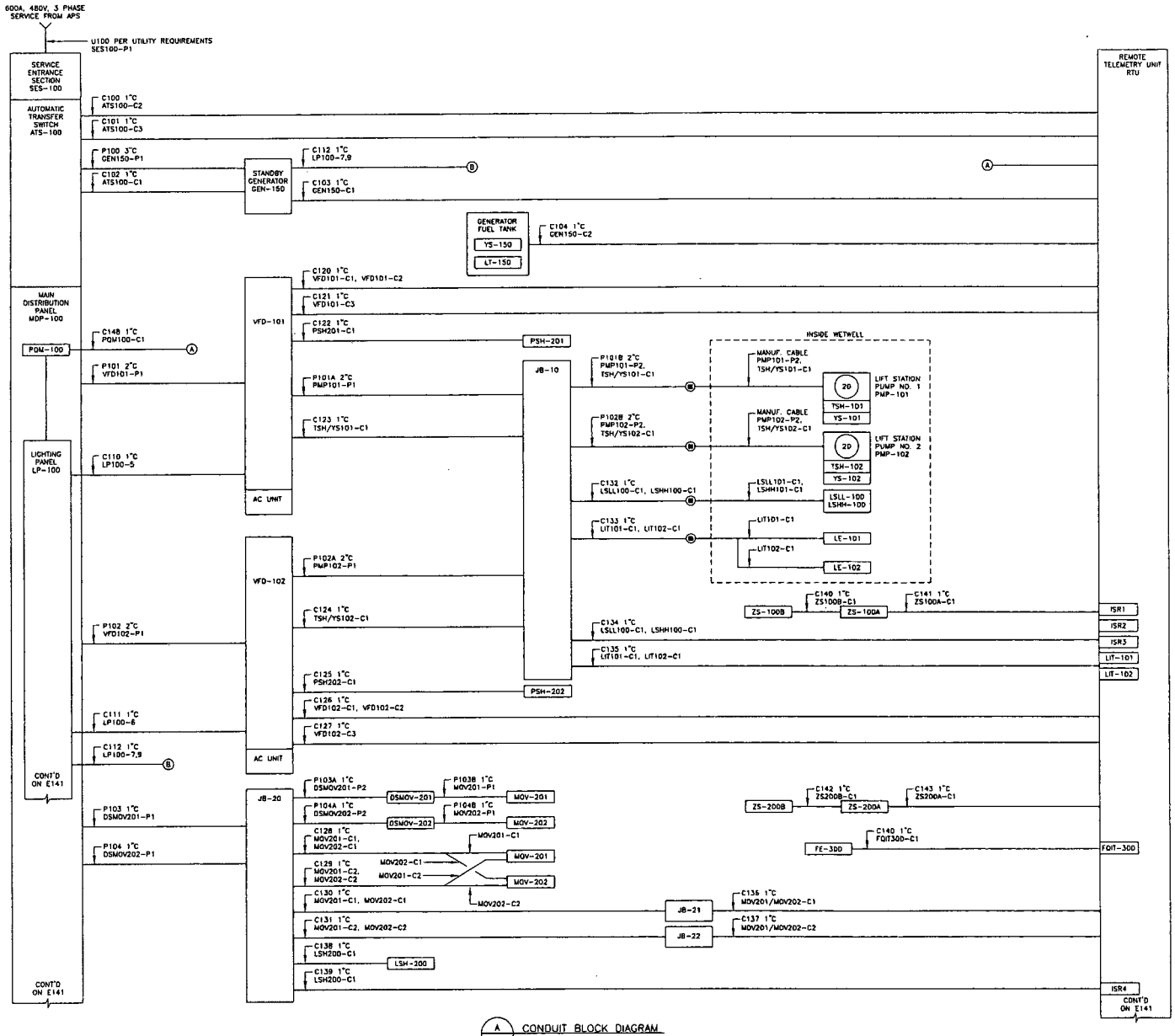

A CONDUIT BLOCK DIAGRAM
NOT TO SCALE

NOTE:

1. SEE SINGLE-LINE DIAGRAM, PANEL SCHEDULE AND SCHEMATICS/CONNECTION DIAGRAMS FOR CIRCUIT CONDUCTOR QUANTITY AND SIZES.

CONDUIT NUMBER NAMING KEY

C100 1"C
ATS-C1

CONDUIT NUMBER
CONDUIT SIZE
CIRCUIT NUMBER(S)

THIS MARK MEASURES 1" ON ORIG. PLANS

COPYRIGHT (c) ALL RIGHTS RESERVED NOT TO BE COPIED OR REPRODUCED WITHOUT WRITTEN PERMISSION

VALENTINE ENGINEERING CONSULTANTS, INC.
4530 East Millwood Drive, Suite 113 Phoenix, Arizona 85048-7693
Phone: (480) 283-0991 Fax: (480) 283-0982

SOUTHEAST LIFT STATION

CONDUIT BLOCK DIAGRAM

GLOBAL WATER
RELIABLE • RENEWABLE • REUSABLE
21410 N. 19th Ave., Ste. 201 • Phoenix, AZ 85027
Ph: 623.580.9600 • FX: 623.580.9629

Drawn:	Date:
KK	06/07
App'vd:	Date:
BA	06/07

Scale:

Sheet: XX OF XX

Drawing Number:

E-130

DLT&V
SYSTEMS ENGINEERING
3550 N. CENTRAL AVE. STE. 1900
PHOENIX, AZ 85012 (602) 266-4638

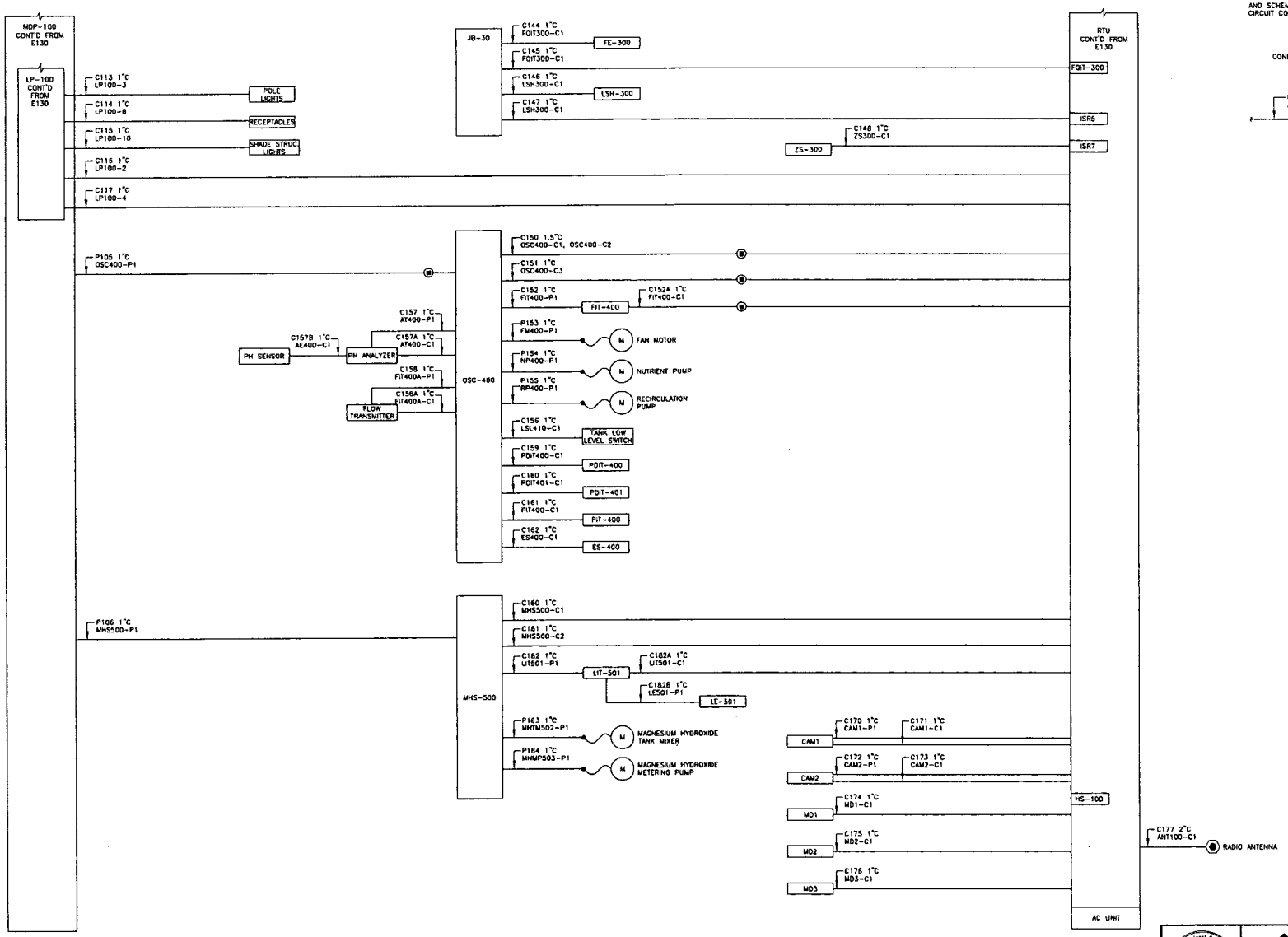

A CONDUIT BLOCK DIAGRAM
NOT TO SCALE

NOTE:

1. SEE SINGLE-LINE DIAGRAM, PANEL SCHEDULE AND SCHEMATICS/CONNECTION DIAGRAMS FOR CIRCUIT CONDUCTOR QUANTITY AND SIZES.

CONDUIT NUMBER NAMING KEY
C100 1"C — CONDUIT NUMBER, CONDUIT SIZE
ATS-C1 — CIRCUIT NUMBER(S)

THIS MARK MEASURES 1" ON ORIG. PLANS

COPYRIGHT (c) ALL RIGHTS RESERVED NOT TO BE COPIED OR REPRODUCED WITHOUT WRITTEN PERMISSION

VALENTINE INNOVATIVE SOLUTIONS LLC
4530 East Holmwood Drive, Suite 113 Phoenix, Arizona 85048-7693
Phone: (480) 283-8991 Fax: (480) 283-0982

SOUTHEAST LIFT STATION
CONDUIT BLOCK DIAGRAM

GLOBAL WATER
RELIABLE - RENEWABLE - REUSABLE
21410 N. 19th Ave. • Ste. 201 • Phoenix, AZ 85027
Ph: 623.580.9600 • Fx: 623.580.9659
www.gwresources.com

Drawn: XX	Date: 05/07
App'vd: BA	Date: 05/07
Scale:	
Sheet: XX OF XX	
Drawing Number: E-131	

DLT&V SYSTEMS ENGINEERING
3550 N. CENTRAL AVE. STE. 1900
PHOENIX, AZ 85012 (602) 588-4659

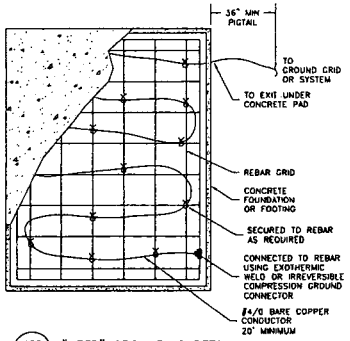

402 TYP "UFER" GROUNDING DETAIL
NOT TO SCALE

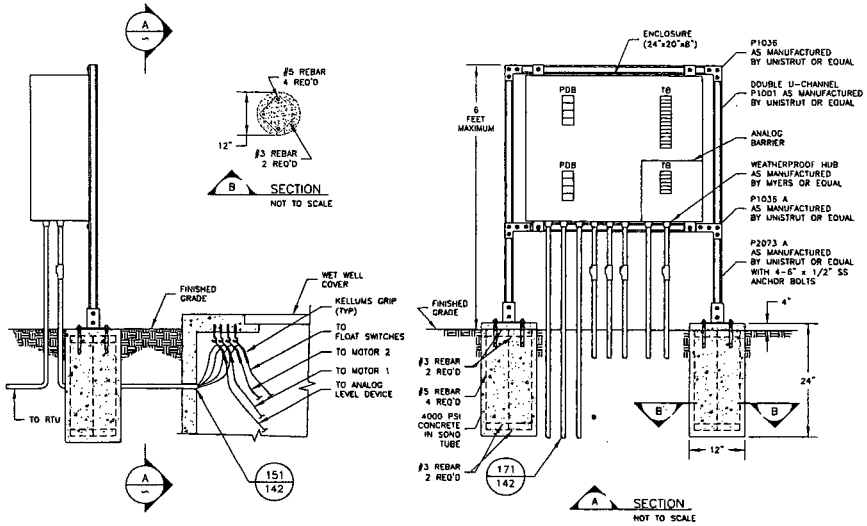

213 ~ WET WELL JUNCTION BOX
NOT TO SCALE

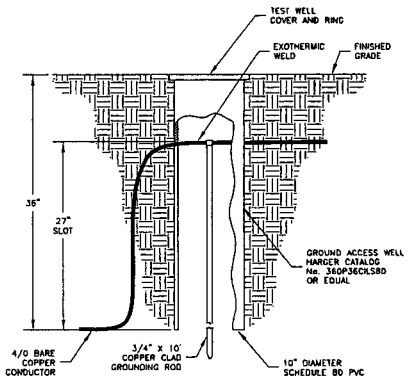

406 TYP GROUND ROD WITH TEST ACCESS WELL
NOT TO SCALE

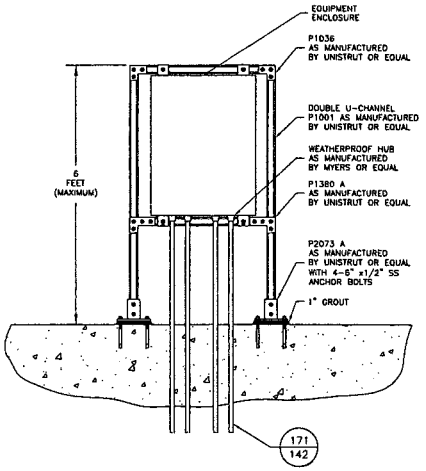

207 TYP EQUIPMENT RACK DETAIL - NON-CLASSIFIED AREAS
NOT TO SCALE

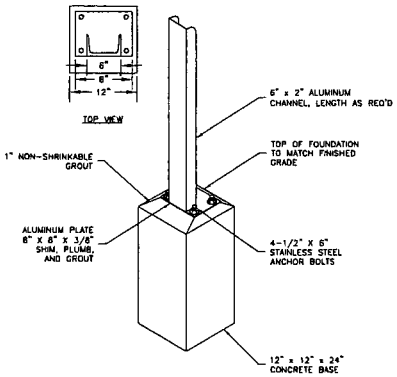

205 TYP EQUIPMENT MOUNTING
NOT TO SCALE

THIS MARK MEASURES 1" ON ORIG. PLANS

COPYRIGHT (c) ALL RIGHTS RESERVED NOT TO BE COPIED OR REPRODUCED WITHOUT WRITTEN PERMISSION

VALENTINE
ENGINEERING CONSULTANTS
4636 East Elwood Drive, Suite 113 Phoenix, Arizona 85044-7633
Phone: (480) 283-8891 Fax: (480) 283-0982

SOUTHEAST LIFT STATION
TYPICAL DETAILS
SHEET 1

GLOBAL WATER
RELIABLE • RENEWABLE • REUSABLE
21410 N. 19th Ave., Ste. 201 • Phoenix, AZ 85027
Ph: 623.580.9600 • Fx: 623.580.9659
www.globalwaterco.com

Drawn: XX	Date: 06/07
App'vd: BA	Date: 06/07
Scale:	
Sheet: XX OF XX	
Drawing Number: E-140	

DLT&V
SYSTEMS ENGINEERING
2550 N. CENTRAL AVE. STE. 1900
PHOENIX, AZ 85012 (602) 564-4550

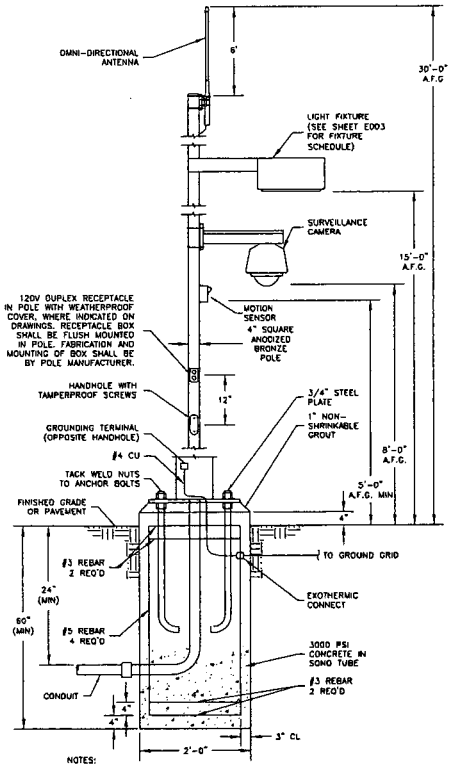

NOTES:

1. J-BOLTS, NUTS, AND WASHERS SHALL BE STAINLESS STEEL AND SUPPLIED WITH POLE BY MANUFACTURER.
2. ANTENNA MAST AND FOUNDATION SHALL BE DESIGNED AND SEALED BY STRUCTURAL ENGINEER.

602 TYP — LIGHT POLE WITH FIXTURE, SURVEILLANCE CAMERA & RADIO ANTENNA
NOT TO SCALE

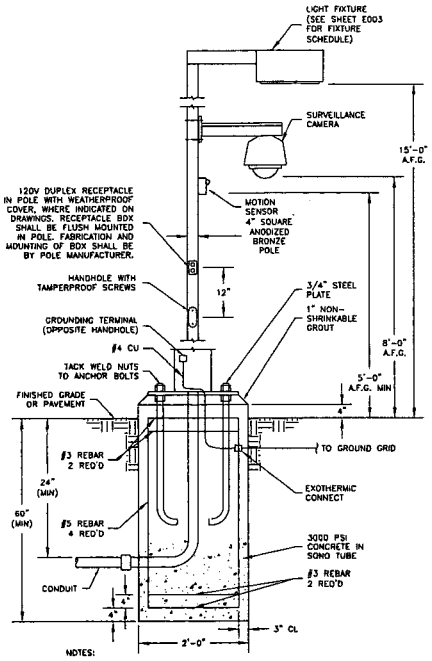

NOTES:

1. J-BOLTS, NUTS, AND WASHERS SHALL BE STAINLESS STEEL AND SUPPLIED WITH POLE BY MANUFACTURER.
2. ANTENNA MAST AND FOUNDATION SHALL BE DESIGNED AND SEALED BY STRUCTURAL ENGINEER.

603 TYP — LIGHT POLE WITH FIXTURE AND SURVEILLANCE CAMERA
NOT TO SCALE

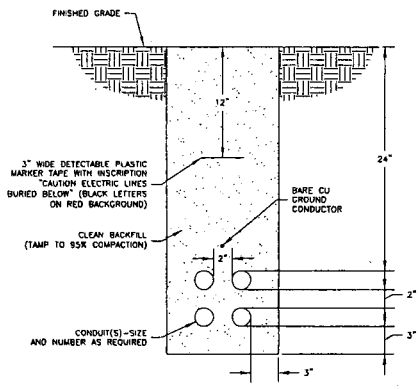

NOTES:

1. GROUND CONDUCTOR SHALL RUN CONTINUOUSLY THROUGH MANHOLES AND SHALL CONTINUE FROM DUCTBANK INTO SWITCHGEAR OR BUILDING GROUNDING SYSTEM AND SHALL BE BONDED TO EACH RIGID METAL CONDUIT. SIZE TO BE #2/0 UNLESS OTHERWISE INDICATED ON PLANS.
2. ALL DIMENSIONS ARE MINIMUM.

101 TYP — DUCTBANK - DIRECT BURIED
NOT TO SCALE

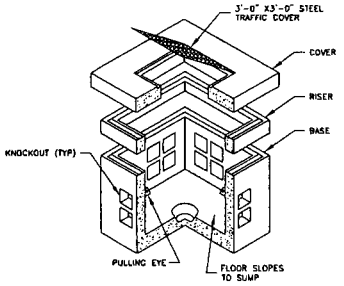

NOTES:
3'-11" x 3'-11" x 4'-1" MINIMUM INSIDE DIMENSIONS.
INSTALL A GROUND ROD AND CONNECT TO DUCT BANK GROUND.
TRAIN CABLES AROUND INTERIOR PERIMETER ON CABLE RACKS.

333 TYP — CONCRETE PULLBOX WITH HINGED COVER
NOT TO SCALE

THIS MARK MEASURES 1" ON ORIG. PLANS

COPYRIGHT (c) ALL RIGHTS RESERVED NOT TO BE COPIED OR REPRODUCED WITHOUT WRITTEN PERMISSION

VALENTINE
ENGINEERING CONSULTANTS, INC.
4530 East Muirwood Drive, Suite 113 Phoenix, Arizona 85048-7693
Phone: (480) 283-8991 Fax: (480) 283-8992

SOUTHEAST LIFT STATION
TYPICAL DETAILS
SHEEI 2

GLOBAL WATER
RELIABLE • RENEWABLE • REUSABLE
21410 N. 19th Ave., Ste. 201 • Phoenix, AZ 85027
PH: (623) 580-9000 • FX: (623) 580-9293
www.gwresources.com

Drawn: XX	Date: 06/07
App'vd: BA	Date: 06/07
Scale:	
Sheet: XX OF XX	
Drawing Number: E-141	

DLT&V
SYSTEMS ENGINEERING
3555 N. CENTRAL AVE. STE. 1605
PHOENIX, AZ 85012 (602) 264-4330

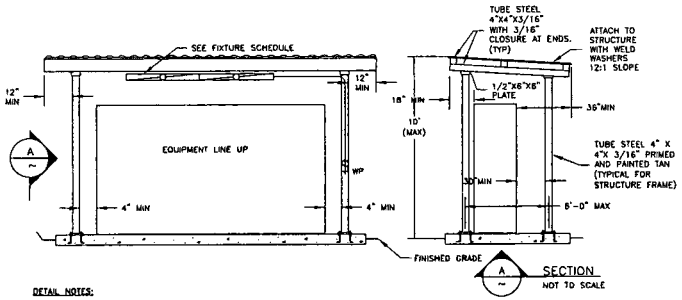

DETAIL NOTES:

1. THE CONCRETE EQUIPMENT PADS SHALL BE SIZED TO EXTEND 18 INCHES TO THE REAR AND SIDES OF THE ENCLOSURES, AND 36 INCHES IN FRONT OF THE ENCLOSURES. STRUCTURAL DETAILS OF THE SHADE STRUCTURES SHALL BE SUBMITTED TO THE ENGINEER FOR REVIEW, AND SHALL BEAR THE SEAL OF REGISTERED STRUCTURAL ENGINEER IN THE STATE WHERE CONSTRUCTED.
2. REFER TO STRUCTURAL PLANS FOR PAD DETAILS.

803 / TYP — EQUIPMENT SHADE STRUCTURE ELEVATION
NOT TO SCALE

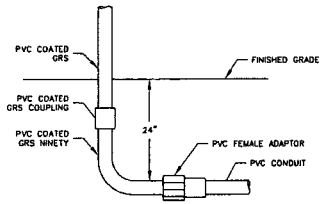

NOTES:

1. WHERE CONDUITS ARE INSTALLED IN A CONCRETE SLAB, THE 24" DIMENSION DOES NOT APPLY. CONDUITS SHALL BE INSTALLED BETWEEN REBAR MATS OR UNDER A SINGLE REBAR MAT.
2. IN CORROSIVE AREAS, PVC COATED GRS SHALL BE USED.

171 / TYP — PVC COATED GRS STUB UP DETAIL
NOT TO SCALE

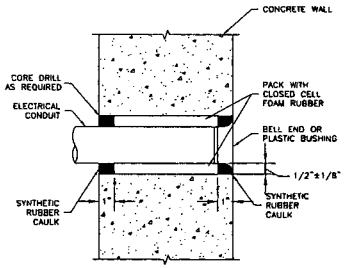

151 / TYP — MANHOLE PENETRATION
NOT TO SCALE

THIS MARK MEASURES 1" ON ORIG. PLANS

COPYRIGHT (c) ALL RIGHTS RESERVED
NOT TO BE COPIED OR REPRODUCED
WITHOUT WRITTEN PERMISSION

VALENTINE
ENGINEERING ASSOCIATES, LTD.
4639 East Hillwood Drive, Suite 113 Phoenix, Arizona 85048-7933
Phone: (480) 353-8891 Fax: (480) 213-0082

SOUTHEAST LIFT STATION
TYPICAL DETAILS
SHEET 3

GLOBAL WATER
RELIABLE • RENEWABLE • REUSABLE
21410 N. 19th Ave. Ste. 201 Phoenix, AZ 85027
Ph: 623-580-9674 Fax: 623-580-9638
www.gwresources.com

Drawn: XX	Date: 06/07
App'vd: BA	Date: 06/07
Scale:	
Sheet: XX OF XX	
Drawing Number: E-142	

DLT&V
SYSTEMS ENGINEERING
3830 N. CENTRAL AVE. STE. 1900
PHOENIX, AZ 85012 (602) 266-4650

NOTES:

1. TYPICAL SCHEMATIC DIAGRAMS ARE INTENDED TO REFLECT THE GENERAL CONTROL STRATEGY. ACTUAL CIRCUITRY MAY VARY FOR SPECIFIC EQUIPMENT SUPPLIED. THE NUMBER AND TYPE OF DEVICES SHALL BE FURNISHED AS REQUIRED FOR PROPER OPERATION OF THE EQUIPMENT.
2. CONTROL POWER TRANSFORMERS (CPT) SHALL BE ADEQUATELY SIZED AND SHALL BE PROVIDED WITH PROPERLY SIZED FUSES FOR BOTH THE PRIMARY AND SECONDARY WINDINGS.
3. CONTROL FUSES SHALL BE ADEQUATELY SIZED PER THE EQUIPMENT MANUFACTURER'S RECOMMENDATIONS.
4. LSLL100 IS THE LOW LEVEL PERMISSIVE FOR THE WETWELL. LSHH100 IS THE HIGH LEVEL ALARM FOR THE WETWELL. THESE CONTACTS ORIGINATE FROM INTRINSICALLY SAFE RELAYS WITHIN THE RTU. REFER TO RTU SHOP DRAWINGS FOR ADDITIONAL INFORMATION.
5. MINICAS II IS SHOWN WITH POWER APPLIED AND NO FAULT.

C CIRCUIT SCHEDULE

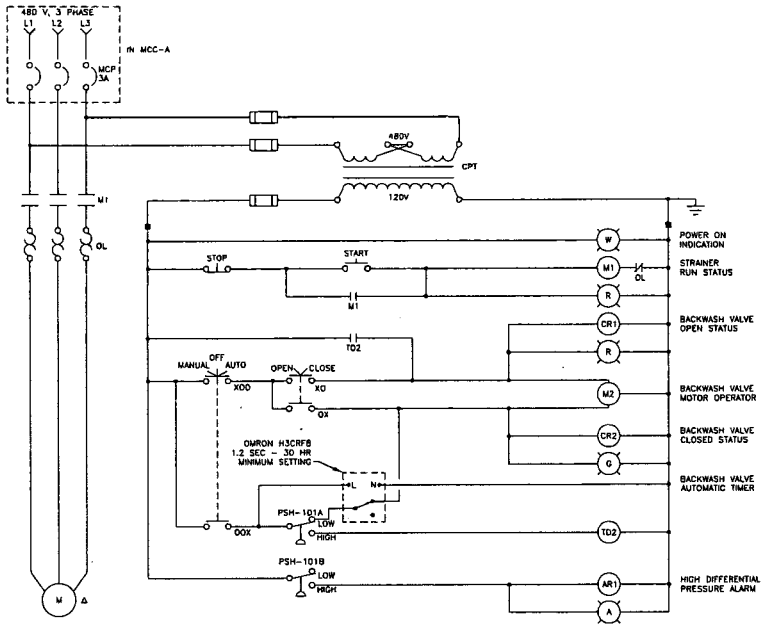

E SELF CONTAINED STRAINER SCHEMATIC DIAGRAM
STRAINER SCS-101 SHOWN
STRAINER SCS-102 SIMILAR

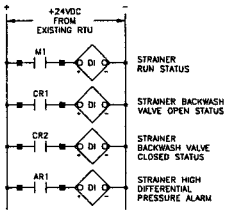

THIS MARK MEASURES 1" ON ORIG. PLANS

COPYRIGHT (c) ALL RIGHTS RESERVED NOT TO BE COPIED OR REPRODUCED WITHOUT WRITTEN PERMISSION

VALENTINE ENGINEERING SOLUTIONS LLC
4630 East Inverness Drive, Suite 110 Phoenix, Arizona 85044-7693
Phone: (480) 736-1891 Fax: (480) 283-4902

SOUTHEAST LIFT STATION
TYPICAL VFD
SCHEMATIC/CONNECTION DIAGRAM

GLOBAL WATER
RELIABLE • RENEWABLE • REUSABLE
21410 N. 19th Ave., Ste. 201 Phoenix, AZ 85027
Ph: 623-580-9600 Fax: 623-580-9605
www.gwresources.com

Drawn: XX	Date: 08/07
App'vd: BA	Date: 08/07
Scale:	
Sheet: XX OF XX	
Drawing Number: E-~~120~~ 150	

DLT&V
SYSTEMS ENGINEERING
3550 N. CENTRAL AVE. STE. 1900
PHOENIX, AZ 85012 (602) 266-4650

ISA INSTRUMENT IDENTIFICATION TABLE

	FIRST LETTERS		SUCCEEDING LETTERS		
	MEASURED OR INITIATING VARIABLE	MODIFIER	READOUT OR PASSIVE FUNCTION	OUTPUT FUNCTION	MODIFIER
A	ANALYZER		ALARM		AUTO
B	BURNER, COMBUSTION				
C	CONDUCTIVITY			CONTROL	CLOSED
D	DENSITY	DIFFERENTIAL			
E	VOLTAGE		ELEMENT		
F	FLOW	RATIO			
G	GAUGE		GLASS, VIEWING DEVICE		
H	HAND				HIGH
I	CURRENT		INDICATE		
J	POWER	SCAN			
K	TIME, TIME SCHED.	TIME RATE OF CHANGE		CONTROL STATION	
L	LEVEL		LIGHT		LOW
M	MOTION				MIDDLE
N	INTRUSION				NORMAL
O	TORQUE		ORIFICE, RESTRICTION		OPEN
P	PRESSURE		POINT CONNECTION		STOP
Q	QUANTITY	INTEGRATE, TOTALIZE			
R	RADIATION		RECORD, OR PRINT		RUN OR REMOTE
S	SPEED, FREQUENCY	SAFETY		SWITCH	START
T	TEMPERATURE			TRANSMIT	
U	MULTIVARIABLE		MULTIFUNCTION	MULTIFUNCTION	MULTIFUNCTION
V	VIBRATION			VALVE, LOUVER	
W	WEIGHT		WELL		
X	MOTOR	X-AXIS	UNCLASSIFIED	UNCLASSIFIED	UNCLASSIFIED
Y	EVENT, STATE, OR PRESENCE	Y-AXIS		RELAY, COMPUTE, CONVERT	
Z	POSITION	Z-AXIS		DRIVER, ACTUATOR, FINAL CONTROL ELEMENT	

P&ID ABBREVIATIONS

A	AMPERE
AFD	ADJUSTABLE FREQUENCY DRIVE
AI	ANALOG INPUT
AIC	AMPS INTERRUPTING CAPACITY
ARV	AIR RELIEF VALVE
AO	ANALOG OUTPUT
AS	AIR SUPPLY
ATS	AUTOMATIC TRANSFER SWITCH
AUTO	AUTOMATIC
CB	CIRCUIT BREAKER
CL2	CHLORINE
CON	CONTACTOR
CU	COPPER
CV	CONTROL VALVE
DCS	DISTRIBUTED CONTROL SYSTEM
DI	DISCRETE INPUT
DO	DISSOLVED OXYGEN, DISCRETE OUTPUT
DP	DIFFERENTIAL PRESSURE
DWG	DRAWING
EGO	EMERGENCY GAS OFF
ETM	ELAPSED TIME METER
ETMf	ELAPSED TIME METER (FAST SPEED)
ETMs	ELAPSED TIME METER (SLOW SPEED)
EOL	ELECTRONIC OVERLOAD
EXIST	EXISTING
FA	FOUL AIR
FC	FAIL CLOSED
FE	FINAL EFFLUENT
FR	FORWARD-REVERSE
FS	FLOAT SWITCH
FVNR	FULL VOLTAGE NON-REVERSING
FW	FINISHED WATER
GND	GROUND
GAL	GALLONS
GPD	GALLONS PER DAY
GPH	GALLONS PER HOUR
GPM	GALLONS PER MINUTE
H, HI	HIGH
H2S	HYDROGEN SULFIDE
HMI	HUMAN MACHINE INTERFACE
HOA	HAND-OFF-AUTO
I	CURRENT
IO	INPUT/OUTPUT
IOE	INTERNAL-OFF-EXTERNAL
JB	JUNCTION BOX
L, LO	LOW
LAN	LOCAL AREA NETWORK
LC	LOOP CONTROLLER
LCP	LOCAL CONTROL PANEL
LOS	LOCK-OFF-STOP
LR	LOCAL/REMOTE
LS	LEVEL (i.e., FLOAT) SWITCH
M	MOTOR
MA	MANUAL/AUTO
mA	MILLIAMP
MC	MANUFACTURE CABLE
MCC	MOTOR CONTROL CENTER
MCP	MOTOR CIRCUIT PROTECTOR
MF(S)	MANUFACTURER(S)
MGD	MILLION GALLONS PER DAY
MGL	MILLIGRAMS PER LITER
MH	MANHOLE
MLR	MIXED LIQUOR RETURN
MO	MOISTURE
MOD	MODULATED
MTU	MASTER TELEMETRY UNIT
NPW	NON-POTABLE WATER
NS	NITROGEN SUPPLY
NTU	TURBIDITY
O/C	OPEN / CLOSE
OCA	OPEN-CLOSE-AUTO
OCR	OPEN-CLOSE-REMOTE
OIT	OPERATOR INTERFACE TERMINAL
OL	OVERLOAD
OO	ON/OFF (MAINTAINED)
OOA	ON-OFF-AUTO
OOR	ON-OFF-REMOTE
OSC	OPEN-STOP-CLOSE
PAH	PRESSURE ALARM HIGH
PER	PERMISSIVE
PLC	PROGRAMMABLE LOGIC CONTROLLER
PNL	PANEL
PO	PULSE OUTPUT
POS	POSITION
POT	POTENTIOMETER
PPG	POUNDS PER GALLON
PPH	POUNDS PER HOUR
PPM	PARTS PER MILLION
PR	PAIR
PRES	PRESSURE
PS	PRESSURE SWITCH
PSI	POUNDS PER SQUARE INCH
PV	PROCESS VARIABLE
RAS	RETURN ACTIVATED SLUDGE
RAW	RAW WATER
REM	REMOTE
RF	RADIO FREQUENCY
RIO	REMOTE INPUT OUTPUT
RS	RAW SEWAGE
RSP	RAW SEWAGE PUMP
RST	RESET
RTD	RESISTANCE TEMPERATURE DETECTOR
RTU	REMOTE TELEMETRY UNIT
RUNf	RUN (FAST SPEED)
RUNs	RUN (SLOW SPEED)
SB	SLUDGE BLANKET
SEQ	SERVICE ENTRANCE EQUIPMENT
SES	SERVICE ENTRANCE SECTION
SLC	SINGLE LOOP CONTROLLER
SLOS	START-LOCK-OFF-STOP
SO2	SULFUR DIOXIDE
SOV	SOLENOID OPERATED VALVE
SP	SET POINT
SPD	SPEED
SPR	SPARE
SS	START/STOP (MAINTAINED)
SSS	SOLID STATE STARTER (SOFT START)
STR	MOTOR STARTER
TAH	TEMPERATURE ALARM HIGH
T/M	TEMPERATURE AND/OR MOISTURE
TEMP	TEMPERATURE
TS	TEMPERATURE SWITCH
TSS	TOTAL SUSPENDED SOLIDS
UG	UNDERGROUND
USD	UP/STOP/DOWN
V	VOLT
VFD	VARIABLE FREQUENCY DRIVE
W	WATER
WAS	WASTE ACTIVATED SLUDGE
WW	WASTEWATER
XMTR	TRANSMITTER
ZS	POSITION (i.e. LIMIT) SWITCH

TAG NUMBERS AND DESIGNATIONS

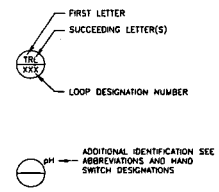

HAND SWITCH DESIGNATIONS

ES	EMERGENCY STOP
HOA	HAND-OFF-AUTO
HOR	HAND-OFF-REMOTE
HORA	HAND-OFF-REMOTE-AUTO
JOA	JOG-OFF-AUTO
LOR	LOCAL-OFF-REMOTE
LR	LOCAL-REMOTE
OC	OPEN-CLOSE
OO	ON-OFF
S/S	START STOP PUSH BUTTONS

LINE SYMBOLS

- MAJOR PROCESS PIPING OR FLOW CHANNEL
- EXISTING PROCESS PIPING
- SECONDARY PROCESS PIPING
- EXISTING SECONDARY PROCESS PIPING
- MISCELLANEOUS PIPING
- EXISTING PIPING AND EQUIPMENT
- FUTURE PIPING AND EQUIPMENT
- ELECTRICAL SIGNAL
- HYDRAULIC SIGNAL
- PNEUMATIC SIGNAL
- ELECTRICAL DIRECTION ARROW
- SIGNAL CONNECTION POINT
- FLOW ARROW FOR PROCESS PIPING
- 1-3 /A — PROCESS OR SIGNAL LINE GOING TO ANOTHER SHEET (MATCH LETTERS)
- 1-2 /A — PROCESS OR SIGNAL LINE FROM ANOTHER SHEET (MATCH LETTERS)
- PROCESS LINES CROSSING (NOT CONNECTED)
- INTERNAL SYSTEM SIGNAL LINK (SOFTWARE OR DATA LINK)

THIS MARK MEASURES 1" ON ORIG. PLANS

COPYRIGHT (c) ALL RIGHTS RESERVED NOT TO BE COPIED OR REPRODUCED WITHOUT WRITTEN PERMISSION

VALENTINE
ENVIRONMENTAL CONSULTANTS, LLC
4530 East Indianola Drive, Suite 113 Phoenix, Arizona 85018-7633
Phone: (480) 293-8591 Fax: (480) 293-0082

P&ID VALVE SYMBOLS

- GATE OR GENERIC VALVE
- 3-WAY VALVE
- 4-WAY VALVE
- ANGLE VALVE
- BUTTERFLY VALVE
- PLUG VALVE
- ECCENTRIC PLUG VALVE
- BALL VALVE
- CHECK VALVE
- SWING CHECK VALVE
- STOP CHECK VALVE
- BALL CHECK VALVE
- PINCH VALVE
- DIAPHRAGM VALVE
- DIAPHRAGM VALVE (ALTERNATE)
- GLOBE VALVE
- HAND VALVE
- KNIFE VALVE
- MOTORIZED VALVE ACTUATOR
- SOLENOID VALVE 2-WAY
- SOLENOID VALVE 3-WAY
- PUMP CONTROL VALVE
- FLOW CONTROL VALVE
- PRESSURE RELIEF VALVE
- VACUUM RELIEF VALVE
- PRESSURE REGULATOR WITH REMOTE PROCESS CONNECTION
- PRESSURE REGULATOR SELF CONTAINED
- AIR RELEASE VALVE

P&ID EQUIPMENT AND PROCESS SYMBOLS

- METERING PUMP WITH MANUAL STROKE CONTROL
- ROTARY LUBE PUMP
- SUBMERSIBLE MIXER
- AERATOR
- SUBMERSIBLE PUMP
- DIESEL GENERATOR
- CENTRIFUGAL PUMP
- BLOWER
- LIFT PUMP
- MOTOR OR MOTOR ACTUATOR
- PNEUMATIC ACTUATOR
- SOLENOID
- VERTICAL TURBINE PUMP
- CHLORINE TANK
- WEIGHT SCALE
- AIR COMPRESSOR
- SLUICE GATE
- SAMPLER
- PROPELLER FLOWMETER ELEMENT
- MAGNETIC FLOWMETER ELEMENT
- CL2 FLOWMETER
- FIT 6 MASS — INSERTION TYPE MASS FLOW METER
- FIT 6 MASS — MASS FLOW METER ANNUBAR TYPE
- DRAIN
- OUTLET SILENCER
- INLET SILENCER
- ROTAMETER
- AIR FILTER
- EJECTOR
- DIAPHRAGM SEAL
- DIFFUSER
- DIAPHRAGM
- Y-TYPE STRAINER
- IPS CORPORATION STOP
- PVC DIFFUSER WITH IPS CORPORATION STOP

SENSING, INDICATION, AND CONTROL SYMBOLS

- LC — ULTRASONIC LEVEL TRANSDUCER
- LS — FLOAT SWITCH
- BEACON R — BEACON R=RED, A=AMBER, B=BLUE, G=GREEN
- STOP YL G — INDICATING LIGHT
- HOA HS — HAND SWITCH
- ORP AIT — ORP ANALYZER
- pH AIT — pH ANALYZER
- AE — ANALYZER ELEMENT
- DO AE — DO SENSOR
- ORP AE — ORP SENSOR
- pH AE — pH SENSOR
- DO AIT — DO ANALYZER
- CL2 AE — RESIDUAL CL2 CHLORINE SENSOR
- CL2 AIT — RESIDUAL CL2 CHLORINE ANALYZER

P&ID INTERFACE SYMBOLS

- AAA BBB X — PILOT LIGHT X= LENS COLOR, R=RED, G=GREEN, A=AMBER B=BLUE
- AAA BBB CCC — FIELD DEVICE
- AAA BBB CCC — PANEL DEVICE
- AAA BBB CCC — DEVICE MOUNTED IN SUBPANEL
- BBB CCC — REMOTE I/O TERMINAL
- BBB CCC — HMI OR OIT FUNCTION
- I X — INTERLOCK DEVICE OR RELAY X=NOTE REF.
- I/I — DUAL CHANNEL CURRENT ISOLATOR
- DISCRETE INPUT
- DISCRETE OUTPUT
- ANALOG INPUT
- ANALOG OUTPUT
- PULSE INPUT

NOTE:

REFER TO ISA INSTRUMENT IDENTIFICATION TABLE FOR DEFINITION OF LETTERS BBB INSIDE THE BUBBLES. CCC REPRESENTS LOOP ID (IF USED). SEE ABBREVIATIONS LIST FOR SUPERSCRIPT AAA.

SOUTHEAST LIFT STATION P&ID SYMBOLS AND LEGENDS

GLOBAL WATER
RELIABLE • RENEWABLE • REUSABLE
21410 N. 19th Ave. • Ste. 201 • Phoenix, AZ 85027
Ph: 623.580.9600 • Fx: 623.580.9659
www.gwresources.com

Drawn: XX	Date: 06/07
App'vd: BA	Date: 06/07
Scale:	
Sheet: XX OF XX	
Drawing Number: I-001	

DLT&V
SYSTEMS ENGINEERING
3950 N. CENTRAL AVE. STE. 1900
PHOENIX, AZ 85012 (602) 266-4450

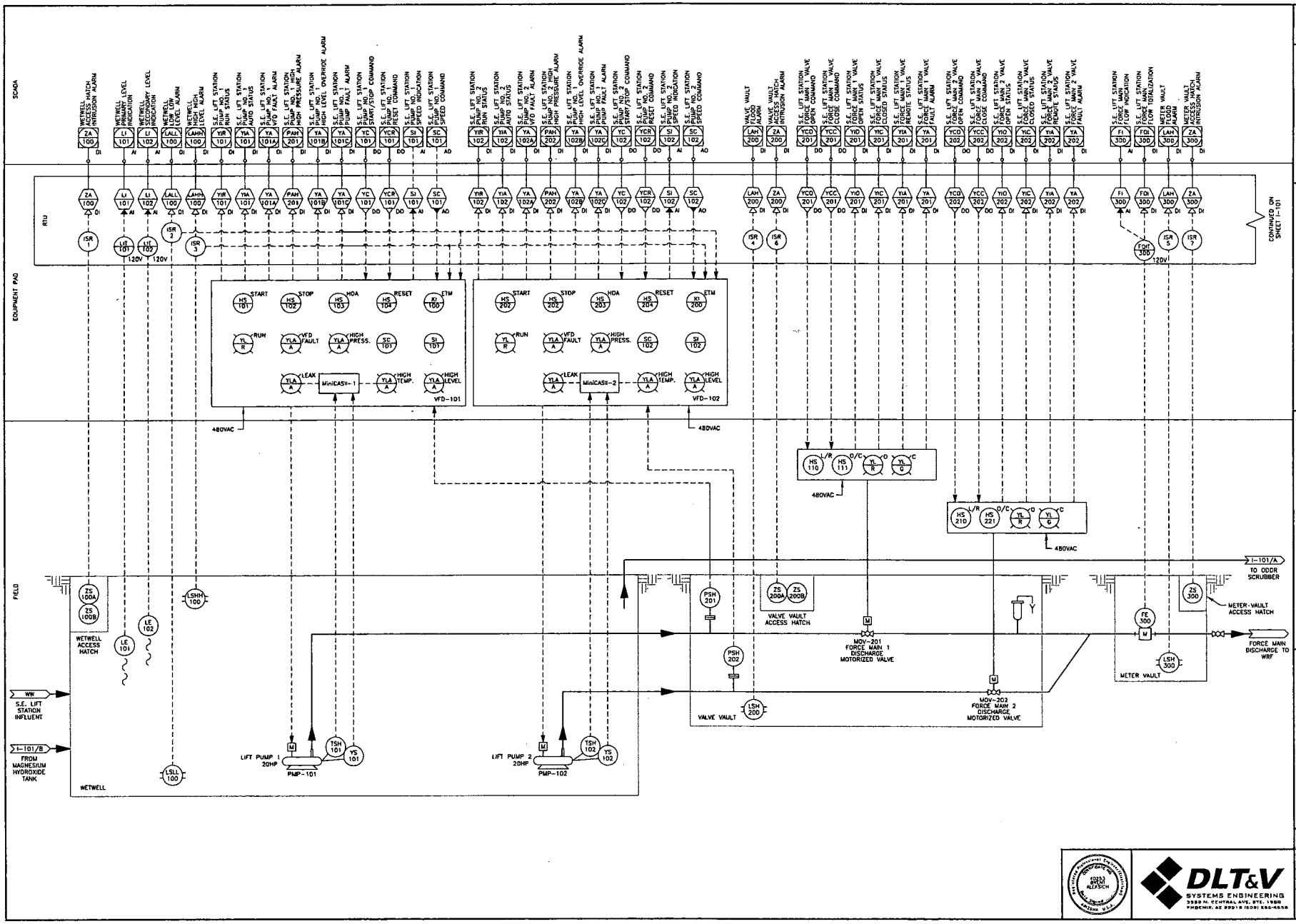

THIS MARK MEASURES 1" ON ORIG. PLANS

COPYRIGHT (c) ALL RIGHTS RESERVED NOT TO BE COPIED OR REPRODUCED WITHOUT WRITTEN PERMISSION

VALENTINE
ENVIRONMENTAL CONSULTANTS, INC.
4636 East Elwood Drive, Suite 113 Phoenix, Arizona 85044-7693
Phone: (480) 283-8951 Fax: (480) 283-9082

SOUTHEAST LIFT STATION
P&ID
SHEET 1

GLOBAL WATER
RELIABLE • RENEWABLE • REUSABLE
21410 N. 19th Ave., Ste. 201 • Phoenix, AZ 85027
Ph: 623.580.8600 • Fx: 623.580.9959
www.gwresources.com

Drawn: XX	Date: 06/07
App'vd: BA	Date: 06/07
Scale:	
Sheet: XX OF XX	
Drawing Number: I-100	

DLT&V
SYSTEMS ENGINEERING
3550 N. CENTRAL AVE. STE. 1580
PHOENIX, AZ 85012 (602) 556-6556

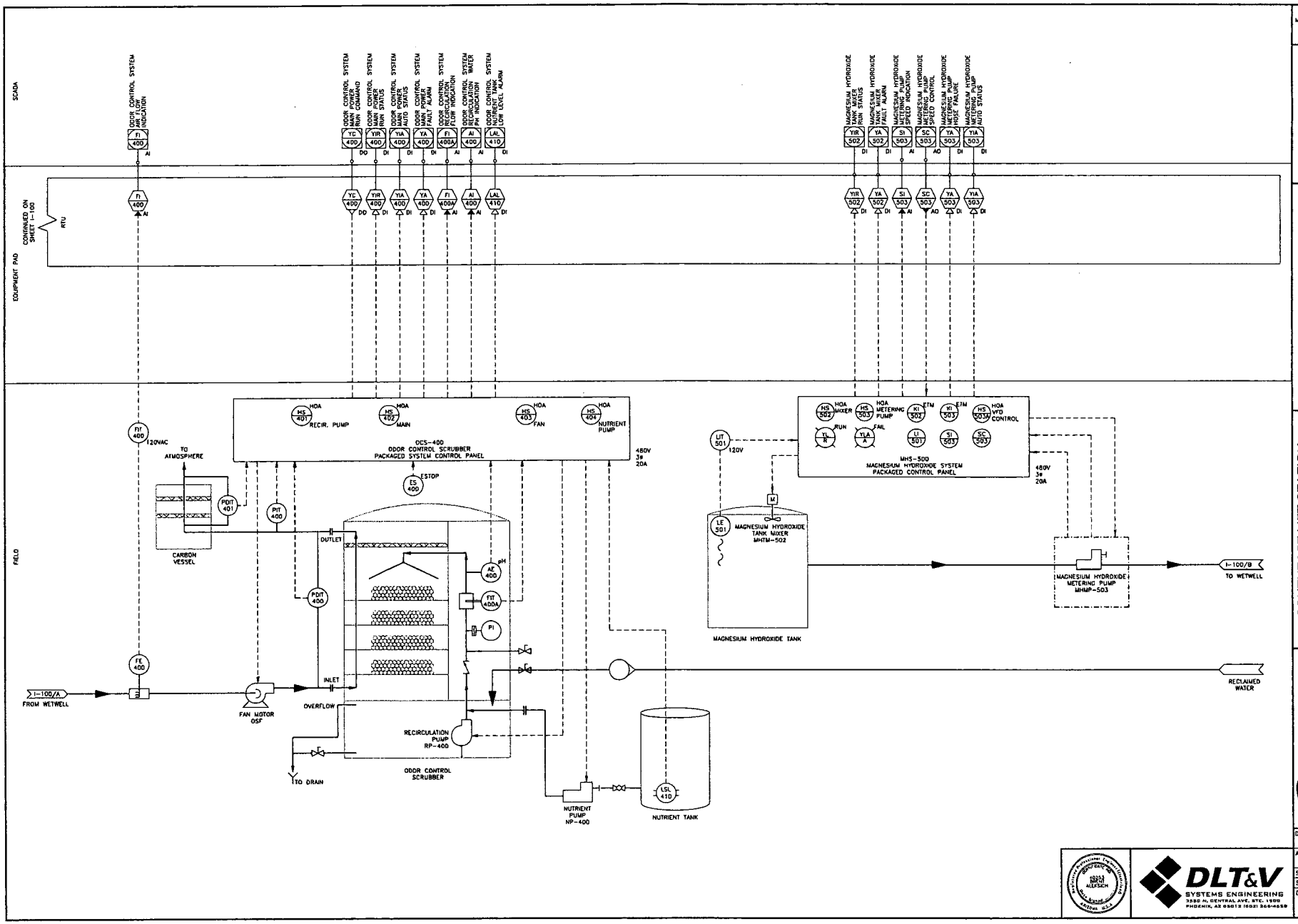

THIS MARK MEASURES 1" ON ORIG. PLANS

COPYRIGHT (c) ALL RIGHTS RESERVED NOT TO BE COPIED OR REPRODUCED WITHOUT WRITTEN PERMISSION

VALENTINE
ENVIRONMENTAL SERVICES, LLC.
4530 East Ahwatukee Drive, Suite 113 Phoenix, Arizona 85044-7633
Phone: (480) 283-8591 Fax: (480) 283-0082

SOUTHEAST LIFT STATION
P&ID
SHEET 2

GLOBAL WATER
RELIABLE • RENEWABLE • REUSABLE
21410 N. 19th Ave. Ste. 201 Phoenix, AZ 85027
Ph: 623.580.9600 Fx: 623.580.9609
www.gwresources.com

Drawn: XX	Date: 06/07
App'vd: BA	Date: 06/07
Scale:	
Sheet: XX OF XX	
Drawing Number: I-101	

DLT&V
SYSTEMS ENGINEERING
3550 N. CENTRAL AVE. STE. 1500
PHOENIX, AZ 85012 (602) 366-4659

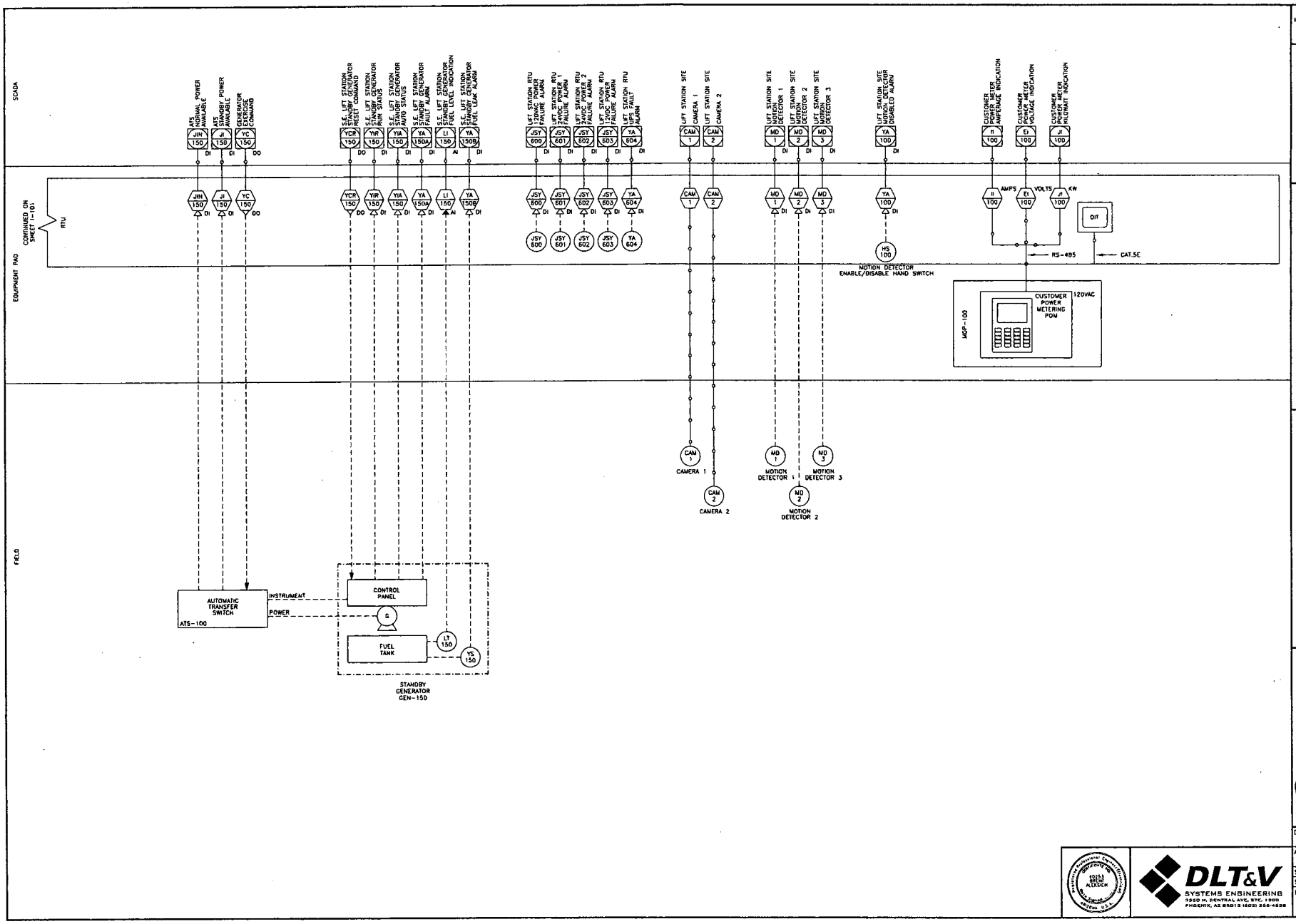

THIS MARK MEASURES 1" ON ORIG. PLANS

COPYRIGHT (c) ALL RIGHTS RESERVED
NOT TO BE COPIED OR REPRODUCED
WITHOUT WRITTEN PERMISSION

VALENTINE
CONSULTING ENGINEERS INC.
4500 East Inverness Drive, Suite 115 Phoenix, Arizona 85048-7933
Phone: (480) 783-9891 Fax: (480) 783-9812

SOUTHEAST LIFT STATION
P&ID
SHEET 2

GLOBAL WATER
RELIABLE • RENEWABLE • REUSABLE
21410 N. 19th Ave., Ste. 201 • Phoenix, AZ 85027
Ph: 623-582-9235 • Fax: 623-582-9239
www.gwresources.com

Drawn: XX	Date: 06/07
App'vd: BA	Date: 06/07
Scale:	
Sheet: XX OF XX	
Drawing Number: I-102	

DLT&V
SYSTEMS ENGINEERING
3550 N. CENTRAL AVE, STE. 1900
PHOENIX, AZ 85012 (602) 266-4658

SCWC and PVUC Legend Extension Year 1	UNIT	UNIT COST	TOTAL
	DUs		200
WATER INFRASTRUCTURE	**LF**		
16" WATER DISTRIBUTION MAIN	21120	$58	$1,224,960
24" WATER DISTRIBUTION MAIN	5280	$76	$401,280
WATER PRODUCTION PLANT	**MGD**		
0.17 gpm/du	0.05		
Develop 1 well total, apportioned cost^	0.05	$250,000	$12,240
Note: min well cost $250,000			
Arsenic/nitrate treatment if necessary	0.05	$1,500,000	$75,000
BOOSTER PUMP	**MGD**		
Booster Pump Capacity 0.58 gpm/du + 1500 gpm fire flow	0.17		
Provide 0.25 MGD	0.25	$125,000	$31,250
WATER STORAGE	**MGD**		
355 gpd/du peak mo demand =	0.07		
Firm Capacity* =	0.02		
Storage Requirement	0.05		
plus Fire Flow 0.5 MGD	0.5		
Total storage	0.55		
Build 1 MG Storage	1.00	$2,300,000	$2,300,000
Buildout Wastewater	**DUs**		**300**
SEWER INFRASTRUCTURE	**LF**		
15" Collection Main	2640	$85	$224,400
18" Collection Main	2640	$95	$250,800
21' Collection Main	2,640	$105	$277,200
27" Collection Main	1320	$115	$151,800
30" Collection Main	1,320	$156	$205,920
	10,560		
WRF CAPACITY	**MGD**		
Flows will be pumped over to Campus 1 WRF	0.1	$0	$0
Lift Station to pump flows over to Campus 1 WRF*	0.1	$1,800,000	100,980
RECLAIMED WATER			
12" Reclaimed Water Main	10,560	$45	$475,200
Recharge Wells Assume each at .33 MGD	0		
TOTAL COST			$5,731,030

^Wells will likely be built for earlier phases of Legends development. Their costs are apportioned to demands from within extension area.

*Lift Station likely will be built for earlier phases of Legends development. The Lift Station will be built for 2 mgd adf, 4 mgd peak, but outfitted mechncailly for 1 mgd adf, 2 mgd peak, until flows dictate adding in the other mechanical system to complete the 2 mgd adf, 4 mgd peak capacity. The lift station costs are apportioned to flows generated within this extension area

SCWC and PVUC Legend Extension Year 2	UNIT	UNIT COST	TOTAL
	DUs		400
WATER INFRASTRUCTURE	LF		
16" WATER DISTRIBUTION MAIN		$58	$0
24" WATER DISTRIBUTION MAIN		$76	$0
WATER PRODUCTION PLANT	MGD		
0.17 gpm/du	0.10		
Develop 1 well total, apportioned cost^	0.10	$250,000	$24,480
Note: min well cost $250,000			
Arsenic/nitrate treatment if necessary	0.10	$1,500,000	$150,000
BOOSTER PUMP	MGD		
Booster Pump Capacity 0.58 gpm/du + 1500 gpm fire flow	0.34		
	0.34	$125,000	$41,948
WATER STORAGE	MGD		
355 gpd/du peak mo demand =	0.14		
Firm Capacity* =	0.05		
Storage Requirement	0.09		
Total storage	0.09		
Have enough storage from Year 1	0.00	$2,300,000	$0
Buildout Wastewater	DUs		500
SEWER INFRASTRUCTURE	LF		
15" Collection Main		$85	$0
18" Collection Main		$95	$0
21' Collection Main		$105	$0
27" Collection Main		$115	$0
30" Collection Main		$156	$0
	0		
WRF CAPACITY	MGD		
Flows will be pumped over to Campus 1 WRF	0.1	$0	$0
Lift Station to pump flows over to Campus 1 WRF*	0.1	$1,800,000	$100,980
RECLAIMED WATER			
12" Reclaimed Water Main	0	$45	$0
Recharge Wells Assume each at .33 MGD	0		
TOTAL COST			$317,408

^Wells will likely be built for earlier phases of Legends development. Their costs are apportioned to demands from within extension area.

*Lift Station likely will be built for earlier phases of Legends development. The Lift Station will be built for 2 mgd adf, 4 mgd peak, but outfitted mechncailly for 1 mgd adf, 2 mgd peak, until flows dictate adding in the other mechanical system to complete the 2 mgd adf, 4 mgd peak capacity. The lift station costs are apportioned to flows generated within this extension area

SCWC and PVUC Legend Extension Year 3	UNIT	UNIT COST	TOTAL
	DUs		600
WATER INFRASTRUCTURE	**LF**		
16" WATER DISTRIBUTION MAIN	10,560	$58	$612,480
24" WATER DISTRIBUTION MAIN	2,640	$76	$200,640
WATER PRODUCTION PLANT	**MGD**		
0.17 gpm/du	0.15		
Develop 1 well total, apportioned cost^	0.15	$250,000	$36,720
Note: min well cost $250,000			
Arsenic/nitrate treatment if necessary	0.15	$1,500,000	$225,000
BOOSTER PUMP	**MGD**		
Booster Pump Capacity 0.58 gpm/du + 1500 gpm fire flow	0.50		
Provide 0.5 MGD	0.5	$125,000	$62,828
WATER STORAGE	**MGD**		
355 gpd/du peak mo demand =	0.21		
Firm Capacity* =	0.07		
Storage Requirement	0.14		
Total storage	0.14		
Have enough capacity with Year 1 storage	0.00	$2,300,000	$0
Buildout Wastewater	**DUs**		**700**
SEWER INFRASTRUCTURE	**LF**		
15" Collection Main	2,376	$85	$201,960
18" Collection Main	0	$95	$0
21' Collection Main	0	$105	$0
27" Collection Main	2,640	$115	$303,600
30" Collection Main	2,640	$156	$411,840
	7,656		
WRF CAPACITY	**MGD**		
Flows will be pumped over to Campus 1 WRF	0.1	$0	$0
Lift Station to pump flows over to Campus 1 WRF*	0.1	$2,000,000	$112,200
RECLAIMED WATER			
12" Reclaimed Water Main	7,656	$45	$344,520
Recharge Wells Assume each at .33 MGD; cumulative total reaches 0.3	1	$350,000	$350,000
TOTAL COST			$2,861,788

^Wells will likely be built for earlier phases of Legends development. Their costs are apportioned to demands from within extension area.

*Lift Station likely will be built for earlier phases of Legends development. Assume by year 3 the additional pumping equipment must be included to complete the 2 mgd adf and 4 mgd peak capacity. The lift station costs are apportioned to flows generated within this extension area

SCWC and PVUC Legend Extension Year 4	UNIT	UNIT COST	TOTAL
	DUs		800
WATER INFRASTRUCTURE	LF		
16" WATER DISTRIBUTION MAIN	0	$58	$0
24" WATER DISTRIBUTION MAIN	0	$76	$0
WATER PRODUCTION PLANT	MGD		
0.17 gpm/du	0.20		
Develop 1 well total, apportioned cost^	0.20	$250,000	$48,960
Note: min well cost $250,000			
Arsenic/nitrate treatment if necessary	0.20	$1,500,000	$300,000
BOOSTER PUMP	MGD		
Booster Pump Capacity 0.58 gpm/du + 1500 gpm fire flow	0.67		
	0.67	$125,000	$83,708
WATER STORAGE	MGD		
355 gpd/du peak mo demand =	0.28		
Firm Capacity* =	0.10		
Storage Requirement	0.19		
Total storage	0.19		
Build 0.75 additional storage	0.75	$2,300,000	$1,725,000
Buildout Wastewater	DUs		900
SEWER INFRASTRUCTURE	LF		
15" Collection Main		$85	$0
18" Collection Main		$95	$0
21' Collection Main		$105	$0
27" Collection Main		$115	$0
30" Collection Main		$156	$0
	0		
WRF CAPACITY	MGD		
WRF Capacity needed 187 gpd/du	0.2	$0	$0
Lift Station to pump flows over to Campus 1 WRF*	0.2	$2,000,000	$336,600
RECLAIMED WATER			
12" Reclaimed Water Main	0	$45	$0
Recharge Wells Assume each at .33 MGD; cumulative total reaches 0.3	1	$350,000	$350,000
TOTAL COST			$2,844,268

^Wells will likely be built for earlier phases of Legends development. Their costs are apportioned to demands from within extension area.

*Lift Station likely will be built for earlier phases of Legends development. The Lift Station will be built for 2 mgd adf, 4 mgd peak, but outfitted mechncailly for 1 mgd adf, 2 mgd peak, until flows dictate adding in the other mechanical system to complete the 2 mgd adf, 4 mgd peak capacity. The lift station costs are apportioned to flows generated within this extension area

SCWC and PVUC Legend Extension Year 5	UNIT	UNIT COST	TOTAL
	DUs		1000
WATER INFRASTRUCTURE	**LF**		
16" WATER DISTRIBUTION MAIN	0	$58	$0
24" WATER DISTRIBUTION MAIN	0	$76	$0
WATER PRODUCTION PLANT	**MGD**		
0.17 gpm/du	0.24		
Develop 1 well total, apportioned cost^	0.24	$250,000	$61,200
Note: min well cost $250,000			
Arsenic/nitrate treatment if necessary	0.24	$1,500,000	$360,000
BOOSTER PUMP	**MGD**		
Booster Pump Capacity 0.58 gpm/du + 1500 gpm fire flow	0.84		
	0.84	$125,000	$104,588
WATER STORAGE	**MGD**		
355 gpd/du peak mo demand =	0.36		
Firm Capacity* =	0.12		
Storage Requirement	0.23		
Total storage	0.23		
Have sufficienct Storage	0.00	$2,300,000	$0
Buildout Wastewater	**DUs**		**1100**
SEWER INFRASTRUCTURE	**LF**		
15" Collection Main		$85	$0
18" Collection Main		$95	$0
21' Collection Main		$105	$0
27" Collection Main		$115	$0
30" Collection Main		$156	$0
	0		
WRF CAPACITY	**MGD**		
WRF Capacity needed 187 gpd/du	0.2	$0	$0
Lift Station to pump flows over to Campus 1 WRF*	0.2	$2,000,000	$336,600
RECLAIMED WATER			
12" Reclaimed Water Main	0	$45	$0
Recharge Wells Assume each at .33 MGD	1	$350,000	$218,167
TOTAL COST			$1,080,554

^Wells will likely be built for earlier phases of Legends development. Their costs are apportioned to demands from within extension area.

*Lift Station likely will be built for earlier phases of Legends development. The Lift Station will be built for 2 mgd adf, 4 mgd peak, but outfitted mechncailly for 1 mgd adf, 2 mgd peak, until flows dictate adding in the other mechanical system to complete the 2 mgd adf, 4 mgd peak capacity. The lift station costs are apportioned to flows generated within this extension area

SCWC and PVUC Legend Extension Buildout	UNIT	UNIT COST	TOTAL
Buildout	**DUs**		**5229**
WATER INFRASTRUCTURE	**LF**		
16" WATER DISTRIBUTION MAIN	31680	$58	$1,837,440
24" WATER DISTRIBUTION MAIN	7920	$76	$601,920
WATER PRODUCTION PLANT	**MGD**		
0.17 gpm/du	1.28		
Build second well^	1	$250,000	$250,000
Arsenic/nitrate treatment if necessary	1	$1,500,000	$1,500,000
Well w/treatment costs Years 1-5			$1,293,600
BOOSTER PUMP	**MGD**		
Booster Pump Capacity 0.58 gpm/du + 1500 gpm fire flow	4.37	$125,000	$546,095
WATER STORAGE	**MGD**		
355 gpd/du peak mo demand =	1.86		
Firm Capacity* =	0.64		
Storage Requirement	1.22		
plus Fire Flow 0.5 MGD	0.5		
Total storage	1.75	$2,300,000	$4,025,000
Buildout Wastewater	**DUs**		**11645**
SEWER INFRASTRUCTURE	**LF**		
15" Collection Main	5016	$85	$426,360
18" Collection Main	2640	$95	$250,800
21' Collection Main	2,640	$105	$277,200
27" Collection Main	3960	$115	$455,400
30" Collection Main	3,960	$156	$617,760
Lift Station Years 1-5	18,216		
Lift Station to pump flows over to Campus 1 WRF*			$987,360
WRF CAPACITY	**MGD**		
WRF Capacity needed 187 gpd/du	2		
Build 2.0 MGD addition/new Campus 7*	2.0	$11,000,000	$22,000,000
RECLAIMED WATER			
12" Reclaimed Water Main	18,216	$45	$819,720
Recharge Wells Assume each at .33 MGD	7	$350,000	$2,309,493
TOTAL COST			**$38,198,148**

	Water DUs	*Wastewater DUs*	
Year 1	**200**	**300**	**$5,731,030**
Year 2	**400**	**500**	**$317,408**
Year 3	**600**	**700**	**$2,861,788**
Year 4	**800**	**900**	**$2,844,268**
Year 5	**1000**	**1100**	**$1,080,554**
Buildout	**5229**	**11645**	**$38,198,148**

Water Buildout			**$10,054,055**
Wastewater Buildout			**$25,014,880**
Reclaimed Water Buildout			**$3,129,213**

^Well 1 built for earlier phases of Legends development outside of extension area. Need to add the 2nd expressly for extension area.

*Campus 7 WRF will be built and commissioned once flows in the entire Legends development reaches 2 mgd adf. Since 2 mgd capacity is required to service the extension area, the full cost for 2 mgd capacity is included.

GLOBAL WATER

MEMORANDUM

01 March 07
Revised 13 August 07

Re: Santa Cruz Water Company
Palo Verde Utilities Company
Water and Wastewater Services CC&N Extension to Serve DR Horton's Legends

This memorandum defines the service requirements of the extension areas required to serve DR Horton's Legends development. On December 31, 2006, Global Water Resources, LLC, purchased the assets of the Francisco Grande Utility Company and CP Water Company, and will soon file an application with the ACC to transfer these CC&Ns to Santa Cruz Water Company (SCWC) and Palo Verde Utilities Company (PVUC). Exhibits 1 and 2 illustrate the existing water and sewer CC&Ns of Francisco Grande and CP Water included in the transfer application. In addition, these exhibits show the extension areas for SCWC and PVUC necessary to provide service for DR Horton's Legends development,, whose boundaries are also shown on these exhibits. The acreage of Legends is approximately 7,027 total. DR Horton's request for service is included elsewhere in this CC&N application docket.

The SCWC extension service area includes approximately 1,494 acres in western Pinal County with an estimated 5,229 equivalent dwelling units at buildout. The PVUC extension service area includes approximately 3,327 acres for an estimated 11,645 equivalent dwelling units at buildout. Exhibit 3 ("Drawing Number EXH-01") shows the proposed water and sewer systems that will be constructed to serve Phase 1 of the Legends. A water distribution and storage site, to be constructed in 2008, is located adjacent to the future water reclamation facility site, PVUC Campus 7, which will not be required until 2012 at the earliest. Wastewater from the early phases of Legends will be transported by mostly gravity sewer to the PVUC existing Campus 1 WRF until the capacity demands in Legends exceed the available capacity at Campus 1, at which time Campus 7 WRF will be constructed which will serve all of Legends. The conceptual layout of the water distribution and storage, and wastewater treatment Campus 7 is included in Exhibit 4.

Absorption Rates and Cost Estimates

	Water DUs	*Wastewater DUs*	
Year 1	**200**	**300**	**$5,731,030**
Year 2	**400**	**500**	**$317,408**
Year 3	**600**	**700**	**$2,861,788**
Year 4	**800**	**900**	**$2,844,268**
Year 5	**1000**	**1100**	**$1,080,554**
Buildout	**5229**	**11645**	**$38,198,148**

21410 North 19th Avenue, Suite 201, Phoenix, Arizona 85027
Phn 623.580.9600
Fax 623.580.9659
gwresources.com

GLOBAL WATER

Water Production

In order to meet the water demand, new infrastructure will be designed and constructed. There are numerous agricultural wells in the proposed service area that are under consideration for conversion to potable water wells. Please refer to Exhibit 5 where you can see wells from the ADWR registry that pass our initial screen of casing size, depth and production.
Exhibit 6 ("Drawing No.1, Water Segment Responsibility"), was used as the basis to identify the water infrastructure needs for the extension area. Please see the Infrastructure tables for the production calculations and costs of infrastructure for years 1-5, and buildout.

This production capacity will be met through the Global Water Well Rehabilitation Program[1] , with the potential to introduce renewable surface water supplies to the area. The proximity of the area to the CAP canal system allows for the potential development of surface water treatment facilities should the service area expand sizably to warrant the investment in surface water treatment.

Wells with arsenic and nitrate levels below the Primary Drinking Water Standards will be given priority, and as necessary, blending will be used to achieve compliance.

Wastewater

Exhibit 7 ("Drawing No.2, Wastewater Segment Responsibility"), was used as the basis to identify the sewer infrastructure needs for the extension area. Please see the Infrastructure tables for the capacity calculations and costs of infrastructure for years 1-5, and buildout. Wastewater will be treated at Campus 1 WRF until such time as the capacity demands in Legends dictate the construction of Campus 7; years 1-5 are expected to be served at Campus 1 WRF.

Reclaimed Water

Exhibit 7 ("Drawing No.2, Wastewater Segment Responsibility"), was used as the basis to identify the reclaimed water infrastructure needs for the extension area, which replicates the line locations of the sewer. As is Global's practice in its PVUC and SCWC service areas, reuse and seasonal recharge of excess A+ reclaimed water are integral to the regional plan, and indeed are imperative to sustain and protect our precious water resources. Accordingly, builders will be subject to Global's land-use Code of Practice in order to maximize direct re-use opportunities. Global Parent's regulated utilities are aggressively promoting the use of reclaimed water to serve golf courses, open spaces, school fields, homeowner association common areas, and irrigation of residential landscaping. In addition, they are pursuing other industrial, commercial, agricultural, and residential uses for reclaimed water, including for flush water use in commercial and industrial buildings. Excess A+ reclaimed water after reuse will be recharged.

---

[1] The ACC is aware of our extensive well assessment program in the PVUC North and Southwest existing service areas, most recently seen as supporting information in our approved Southwest extension, decision number 68448, February 2, 2006 and included in the pending South East Service Area expansion presently under consideration (Docket W01445A-06-0199/SW-03575A-05-0926/W-03576A-05-0926). An identical approach will be followed in extension service area.

21410 North 19th Avenue, Suite 201, Phoenix, Arizona 85027 Phn 623.580.9600
Fax 623.580.9659

gwresources.com

GLOBAL WATER

Included in the table of infrastructure is an itemization and costs for the reclaimed water system necessary to serve the CC&N extension area.

The estimated costs for buildout are as follows:

Water Buildout	**$10,054,055**
Wastewater Buildout	**$25,014,880**
Reclaimed Water Buildout	**$3,129,213**

21410 North 19th Avenue, Suite 201, Phoenix, Arizona 85027

Phn 623.580.9600
Fax 623.580.9659

gwresources.com