EXHIBITS

L-00000FF-07-0134-00133

PART 2 OF 2
BAR CODE # 0000068367

To review Part 1 please see:

BAR CODE #0000077686

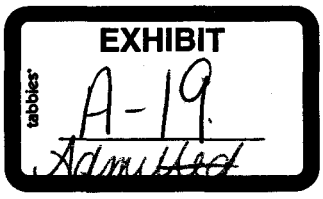

BEFORE THE ARIZONA POWER PLANT AND TRANSMISSION LINE SITING COMMITTEE

IN THE MATTER OF THE APPLICATION OF NORTHERN ARIZONA ENERGY, LLC, IN CONFORMANCE WITH THE REQUIREMENTS OF ARIZONA REVISED STATUTES 40-360.03 AND 40-360.06, FOR A CERTIFICATE OF ENVIRONMENTAL COMPATIBILITY AUTHORIZING CONSTRUCTION OF A 175 MW NATURAL GAS-FIRED, SIMPLE CYCLE GENERATING FACILITY AND ASSOCIATED TRANSMISSION LINE INTERCONNECTING THE GENERATING FACILITY TO THE ADJACENT WESTERN AREA POWER ADMINISTRATION GRIFFITH SWITCHYARD, ALL LOCATED IN MOHAVE COUNTY APPROXIMATELY 9 MILES SOUTHWEST OF KINGMAN, ARIZONA.	DOCKET NO. L-00000FF-07-0134-00133 Case No. 133 **APPLICANT'S NOTICE OF FILING AMENDED PROPOSED FORM OF CERTIFICATE OF ENVIRONMENTAL COMPATABILITY**

Applicant, Northern Arizona Energy, LLC, hereby provides notice that it is filing herewith Applicant's **Amended** Proposed Form of Certificate of Environmental Compatibility.

RESPECTFULLY SUBMITTED this 4th day of October, 2007.

MOYES STOREY, LTD.

Jay I. Moyes

Jay I. Moyes
1850 N. Central Avenue, Suite 1100
Phoenix, Arizona 85004
(602) 604-2141

Original and Twenty-Eight (26) copies of the foregoing filed this 4th day of October 2007 with:

Docket Control
Arizona Corporation Commission
1200 West Washington Street
Phoenix, Arizona 85007

Copy of the foregoing hand-delivered and/or Federal Expressed this 4th day of October 2007 to:

Laurie Woodall, Chairman
Arizona Power Plant & Transmission
Line Siting Committee
1275 West Washington
Phoenix, Arizona 85007
Laurie.Woodall@azag.gov

Maureen A. Scott, Senior Staff Counsel
Legal Division
Arizona Corporation Commission
1200 West Washington Street
Phoenix, Arizona 85007
mscott@azcc.gov

Kenneth C. Sundlof, Jr.
Jennings, Strouss & Salmon, PLC
The Collier Center, 11th Floor
201 East Washington Street
Phoenix, Arizona 85004-2385
Sundlof@sslaw.com

Jack Ehrhardt
P.O. Box 179
Peach Springs, AZ 86434
941 Hualapai Way
Peach Springs, AZ 86434
hualapaiplanning@citlink.net

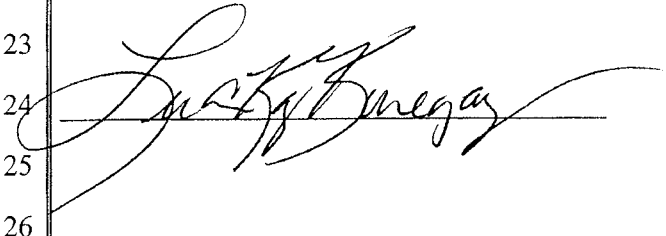

[Applicant's 10-4-07_2 Proposed Form]

BEFORE THE ARIZONA POWER PLANT AND TRANSMISSION LINE SITING COMMITTEE

IN THE MATTER OF THE APPLICATION OF **NORTHERN ARIZONA ENERGY, LLC**, IN CONFORMANCE WITH THE REQUIREMENTS OF ARZIONA REVISED STATUTES 40-360.03 AND 40-360.06, FOR A CERTIFICATE OF ENVIRONMENTAL COMPATABILITY AUTHORIZING CONSTRUCTION OF A 175 MW NATURAL GAS-FIRED, SIMPLE CYCLE GENERATING FACILITY AND ASSOCIATED TRANSMISSION LINE INTERCONNECTING THE GENERATING FACILITY TO THE ADJACENT WESTERN AREA POWER ADMINISTRATION GRIFFITH SWITCHYARD, ALL LOCATED IN MOHAVE COUNTY, APPROXIMATELY 9 MILES SOUTHWEST OF KINGMAN, ARIZONA	Case No. L-00000FF-07-0134-00133 Case No. 133

DECISION OF THE ARIZONA POWER PLANT AND TRANSMISSION LINE SITING COMMITTEE AND CERTIFICATE OF ENVIRONMENTAL COMPATIBILITY

Pursuant to notice given as provided by law, the Arizona Power Plant and Transmission Line Siting Committee ("Committee") held public hearings at The Hampton Inn, Kingman, Arizona, May 1 and 2, 2007, and at the Best Western Executive Suites, Phoenix, Arizona, on September 17 and 18, and October 15, 2007, in conformance with the requirements of Arizona Revised Statutes Section 40-360, *et seq.*, for the purpose of receiving public comment and evidence and deliberating on the Application of Northern Arizona Energy Project ("NAEP") by Northern Arizona Energy, LLC ("Applicant") for a Certificate of Environmental Compatibility ("Certificate") in the above-captioned case.

The following members or designees of members of the Committee were present for some or all of the hearings on the Application:

Laurie A. Woodall	Chairman, Designee for the Arizona Attorney General, Terry Goddard
Paul W. Rasmussen	Designee for Director of the Arizona Department of Environmental Quality
David Eberhart	Designee for Chairman, Arizona Corporation Commission
Jack Haenichen	Designee for Director, Energy Department, Arizona Department of Commerce
Jeff McGuire	Appointed Member, Agriculture
A. Wayne Smith	Appointed Member
Michael Whalen	Appointed Member, Cities
Michael Palmer	Appointed Member
Barry Wong	Appointed Member
Gregg Houtz	Designee for Director of the Arizona Department of Water Resources
Joy Rich	Appointed Member, Counties

Jay Moyes of Moyes Storey Ltd. represented Applicant. Staff of the Arizona Corporation Commission ("Staff") noticed their intervention as a party, and was represented by Maureen Scott, Esq. Mohave County was granted intervenor status and was represented by Kenneth C. Sundlof, Jr., Esq. of Jennings Strouss & Salmon, P.L.C. Mr. Jack Ehrhardt was granted intervention in his individual capacity. Applicant, Staff, Mohave County, and Mr. Ehrhardt presented testimony and exhibits during the hearings. Several persons presented public comments on the record. There were no other interventions or limited appearances.

At the conclusion of the hearings and deliberations the Committee, (i) having received and considered the Application, the appearances of Applicant and each of the intervenors; the

evidence, testimony and exhibits presented by Applicant and the intervenors, respectively; and the public comments; (ii) being advised of the legal requirements of Arizona Revised Statutes Sections 40-360 to 40-360.13; (iii) upon consideration of the factors identified in Arizona Revised Statutes Section 40-360.06; and (iv) in accordance with A.A.C. R14-3-213, upon motion duly made and seconded, voted to make the following findings and to grant Applicant the following Certificate of Environmental Compatibility:

The Committee finds that there is a need for an adequate, economical and reliable supply of electric power within the Western Electricity Coordinating Council (WECC) and the State of Arizona, and that Applicant's proposed Northern Arizona Energy Project would contribute towards satisfaction of such need without causing material adverse impact to the environment.

Northern Arizona Energy, LLC, and its assignee(s), are hereby granted this Certificate of Environmental Compatibility authorizing construction of a nominal 175 MW natural gas-fired, simple cycle generating facility and associated transmission line interconnecting the generating facility to the adjacent Western Area Power Administration Griffith Switchyard (collectively the "Project"). The Project shall comprise no more than four (4) individual simple-cycle natural gas combustion turbine generator units, each having a nominal capacity of approximately 45 MW. As depicted on the attached Exhibit A, the Project shall be constructed wholly within the perimeter of the existing Griffith Energy project site, legally described as the Southwest Quarter of Section 6, Township 19 North, Range 17 West, Gila & Salt River Base & Meridian, Mohave County, Arizona, comprising approximately one hundred sixty (160) acres (the "160 Perimeter"). The Project generators and step-up transformers will be located within the North seven hundred (700) feet of the North One-half of the above-described parcel. The transmission line components of the Project will also be constructed wholly within the 160 Perimeter so as to interconnect the Project generators to the existing Griffith Switchyard owned by Western Area Power Administration ("Western"), also

located wholly within the 160 Perimeter, in a reasonably direct route to be determined by Western and Applicant taking into account appropriate clearances from other existing transmission facilities within the 160 Perimeter, and the most feasible point of access into, and the necessary minor expansion of, the existing Griffith Switchyard as required to complete the interconnection. The transmission line shall not exceed approximately 3,000 feet in total length, and shall be constructed using tubular steel monopole tower structures of the type depicted on the attached Exhibit B, approximately 100 -120 feet in height, in total numbers and spacing to be determined in accordance with applicable Western interconnection standards and applicable safety and reliability standards.

This Certificate is granted upon the following conditions:

1. The Applicant will comply with all existing applicable air and water pollution control standards and regulations, and with all existing applicable ordinances, master plans and regulations of the State of Arizona, Mohave County, the United States, and any other governmental entities having jurisdiction, including but not limited to the following:
    a. all applicable land use regulations;
    b. all applicable zoning stipulations and conditions, including but not limited to landscaping and dust control requirements;
    c. all applicable air quality control standards and regulations, and permit conditions of the Arizona Department of Environmental Quality and/or Federal agencies having jurisdiction; and the Applicant will install and operate selective catalytic reduction and oxidation catalyst emission control technologies on each of the four (4) Project combustion turbine units;
    d. all applicable water use, discharge and/or disposal requirements of the Arizona Department of Water Resources and the Arizona Department of Environmental Quality;

e. all applicable noise control standards;

f. all applicable regulations and permits governing storage and handling of chemicals and petroleum products;

g. all other applicable federal and state regulations and standards.

2. This authorization to construct the Project will expire five (5) years from the date this Certificate is approved by the Arizona Corporation Commission ("Commission") unless substantial construction activities have commenced; provided however, that prior to such expiration Applicant or its assignee may request that the Commission extend this time limitation.

3. Applicant has provided to the Commission a copy of the System Impact Study performed by Western Area Power Administration ("Western"), which Commission Staff has analyzed. Applicant will also provide to the Commission copies of (i) the Facility Study Agreement with Western and (ii) the Facility Study produced by Western, as soon as they are available but no later than 90 days prior to commercial operation of the Project.

4. Applicant will also provide to the Commission copies of the Project's executed interconnection agreement with Western, and the technical operating studies which will be performed by Western prior to actual physical interconnection of the Project to the Western transmission system.

5. Applicant will comply fully with all requirements of Western to interconnect the Project with the Western transmission system and to ensure compliance with all applicable WECC/NERC standards, without the implementation of an automated RAS to mitigate any N-1 contingencies. However, Applicant may rely upon a RAS to mitigate impacts of an outage of either (i) the Peacock – Mead 345 kV line or (ii) the Mead 345/230 kV transformer, coincident with operation of the Liberty Phase Shifter moving power in a Northbound direction.

6. If Applicant enters into a control areas services agreement with a third-party provider, Applicant will provide to the Commission a copy of such agreement.

7. Applicant will not set any combustion turbine on its foundation until a Finding of No Significant Impact (FONSI) has been issued by Western (or, if an Environmental Impact Statement is required for the Project, a Federal Record of Decision has been issued) approving construction of the transmission facilities interconnecting the Project to Western's transmission system.

8. Applicant will not operate the Project combustion turbine generator units more than 20,000 aggregate unit-hours per calendar year.

9. Applicant or its affiliate company will become a member of the Western Electricity Coordinating Council ("WECC") (or its successor), and will provide to the Commission a copy of its executed WECC Reliability Management System ("RMS") Generator Agreement.

10. In the event that the Griffith Energy project permanently ceases operation, Applicant, its successor(s) or assignee(s) will comply with the requirement in Griffith Energy's CEC to measure and monitor (i) the Project's annual water use, (ii) annual changes in the groundwater table at the well field from which water is pumped for use by the Project, and (iii) annual changes in elevation of the existing soil subsidence monitoring monument near such well field, and to report all such information annually to the Arizona Department of Water Resources and Mohave County.

11. Applicant, its successor(s) or assign(s) will submit to the Commission Utilities Division Director, on or about each October 1 after the date hereof, a self-certification letter describing the status of compliance with each condition of this Certificate as of the preceding August 1, with a copy thereof to the Arizona Attorney General. Compliance with conditions that require only a single instance of compliance need not be re-certified after the initial certification of such compliance.

12. Applicant will use reasonable efforts to become a member of the Southwest Reserve Sharing Group (or its successor) if commercially reasonable.

13. Applicant will, in good faith upon adequate advance notice, participate in a Commission-sponsored workshop or other forum addressing the regional natural gas infrastructure and market.

14. Applicant shall pursue all necessary commercially reasonable steps to ensure delivery of a reliable supply of natural gas for the Project.

15. Subject to applicable Federal Energy Regulatory Commission regulations, Applicant or its power marketing affiliates will make commercially reasonable good faith efforts in the ordinary course of business to market wholesale power from the Project directly or indirectly to credit worthy utilities that serve Arizona loads; however, this condition shall not constitute any restraint against, nor shall it in any manner restrict, marketing efforts to or transactions with any other potential purchaser(s) of power from the Project.

16. Prior to on-site mobilization of construction of the Project, Applicant shall erect at the Project site, and maintain throughout construction, a 4'x 8' or larger sign advising of the construction of a 175 MW generating facility, the estimated completion date, and a phone number for public information about the Project.

17. In connection with the construction of the Project, Applicant will use commercially reasonable efforts, where feasible, to give due consideration to use of qualified Arizona contractors.

18. After construction, Applicant will use commercially reasonable means to rehabilitate all land surfaces that are temporarily disturbed by construction activities at the Project site to a condition of terrain and vegetation consistent with the immediately surrounding natural and undisturbed lands.

GRANTED this 15th day of October, 2007.

ARIZONA POWER PLANT AND
TRANSMISSION LINE SITING COMMITTEE

By _____
Laurie A. Woodall, Chairman

Aerial View of Project Site

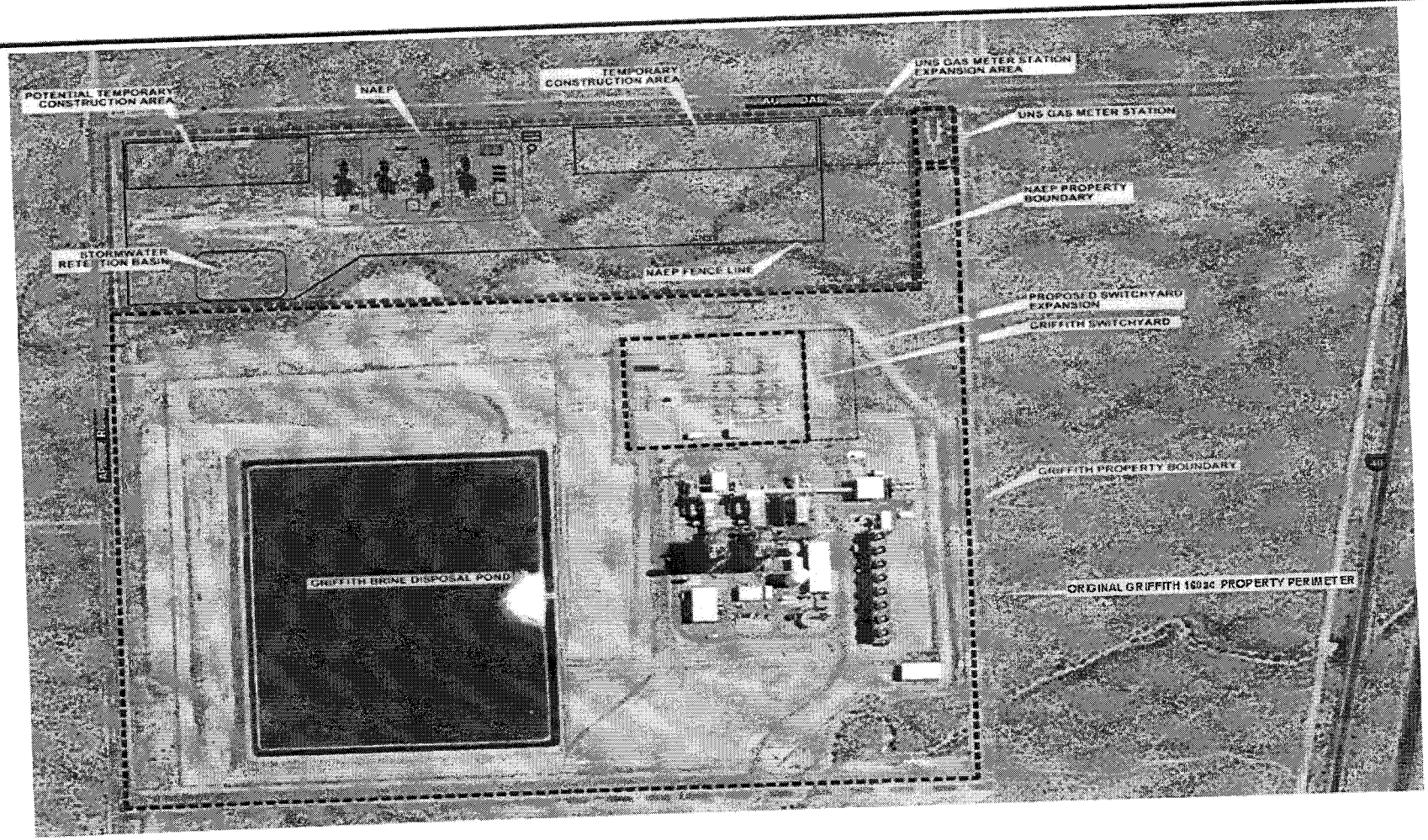

EXHIBIT A

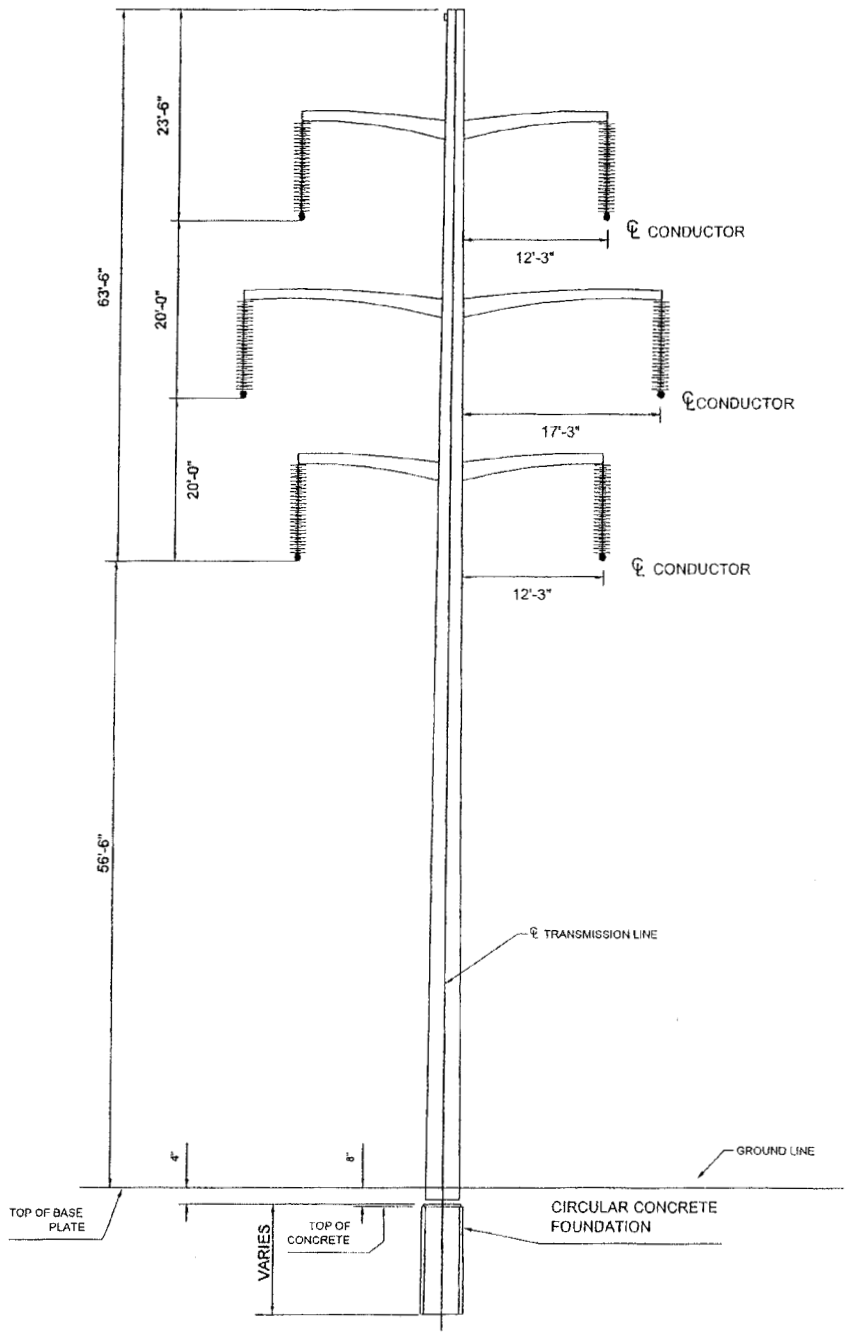

NORTHERN ARIZONA ENERGY PROJECT

Figure K-1
Proposed Transmission Structure

ANALYSIS AREA: MOHAVE COUNTY, ARIZONA	
Date: 02/19/07	File: Figure K-1.dwg
Drawn By:ETC	Layout: 001

Source: Griffith CEC

EXHIBIT B

Summary of Natural Gas Issues

Bob Gray, ACC Staff

September 2007

Docket Number: L-00000FF-07-0134-00133

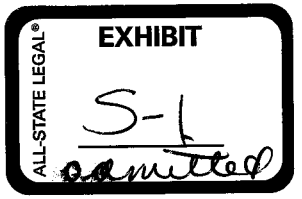

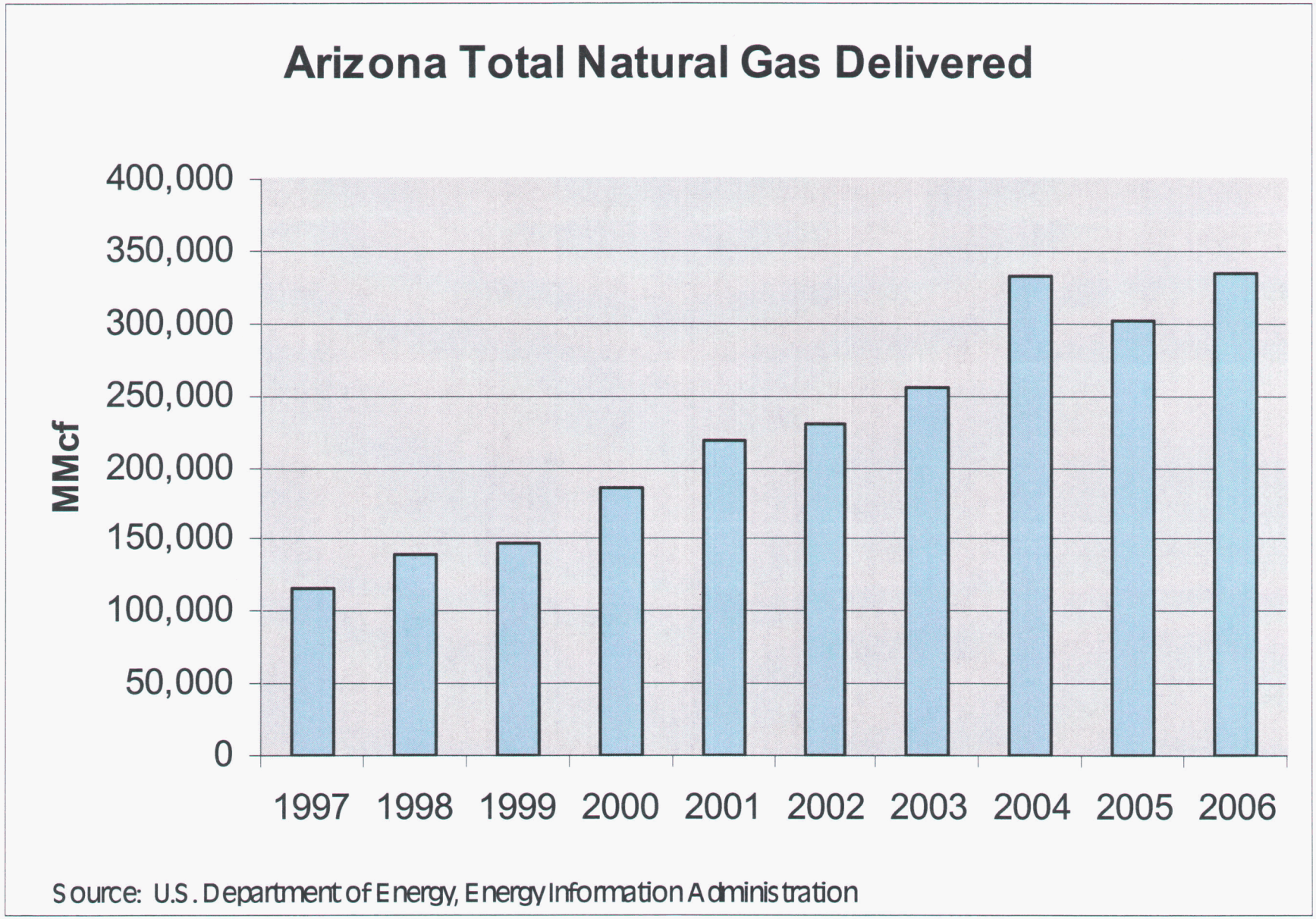
Arizona Total Natural Gas Delivered
MMcf
400,000
350,000
300,000
250,000
200,000
150,000
100,000
50,000
0
1997
1998
1999
2000
2001
2002
2003
2004
2005
2006
Source: U.S. Department of Energy, Energy Information Administration

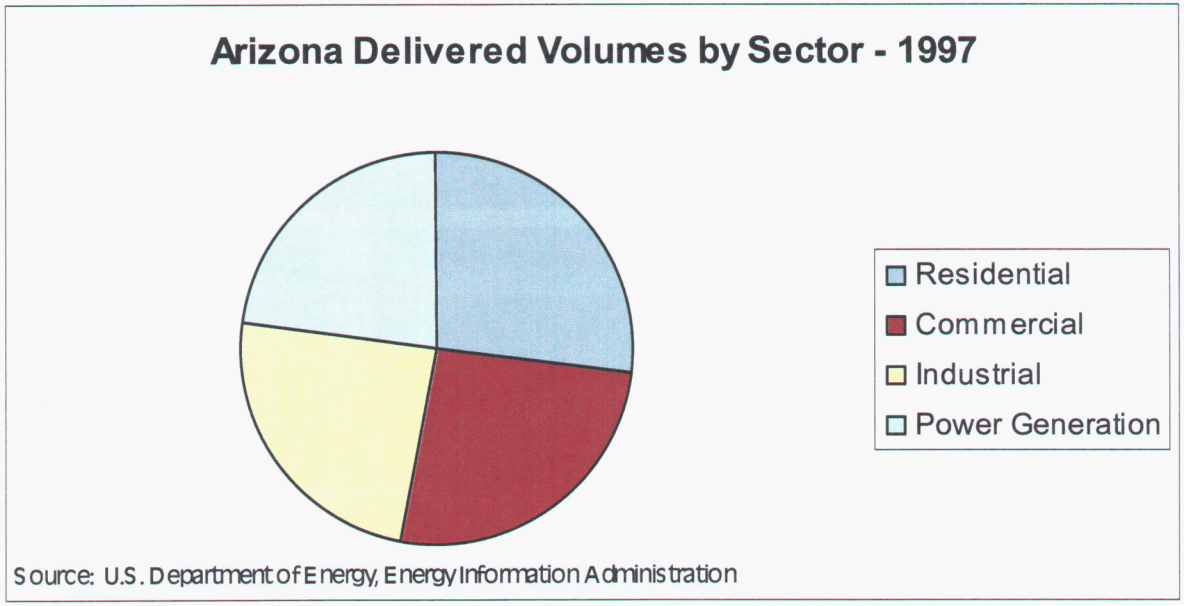
Arizona Delivered Volumes by Sector - 1997
Residential
Commercial
Industrial
Power Generation
Source: U.S. Department of Energy, Energy Information Administration

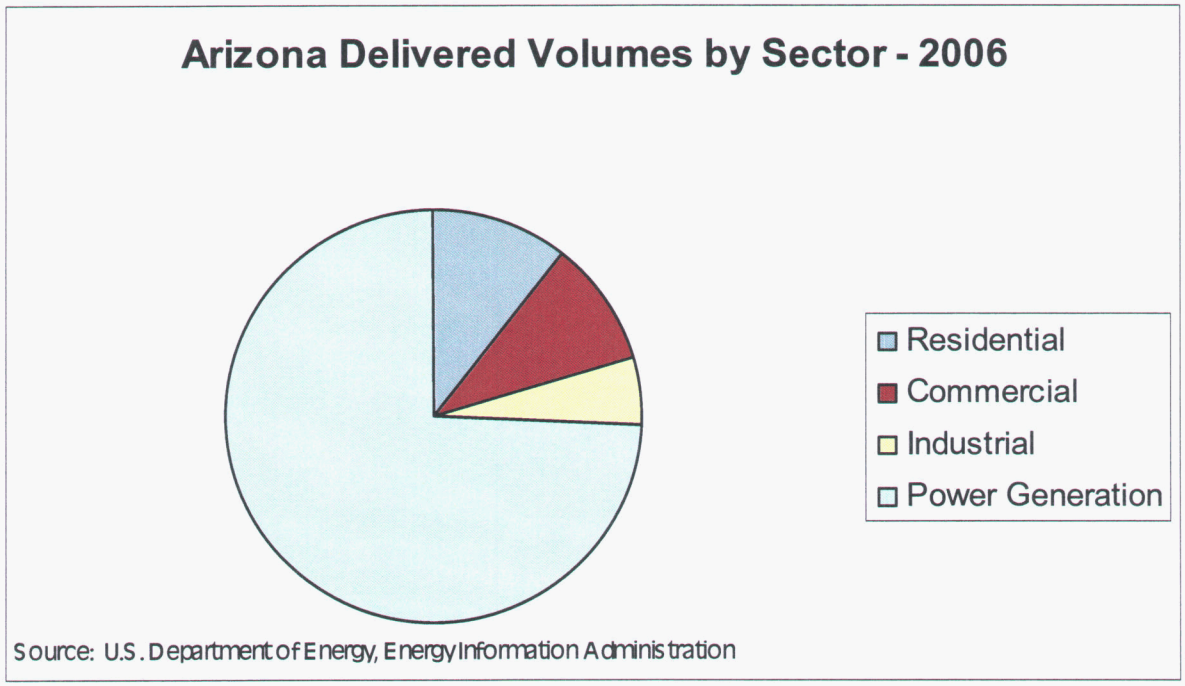
Arizona Delivered Volumes by Sector - 2006
Residential
Commercial
Industrial
Power Generation
Source: U.S. Department of Energy, Energy Information Administration

Natural Gas Pipelines In Arizona and Surrounding States

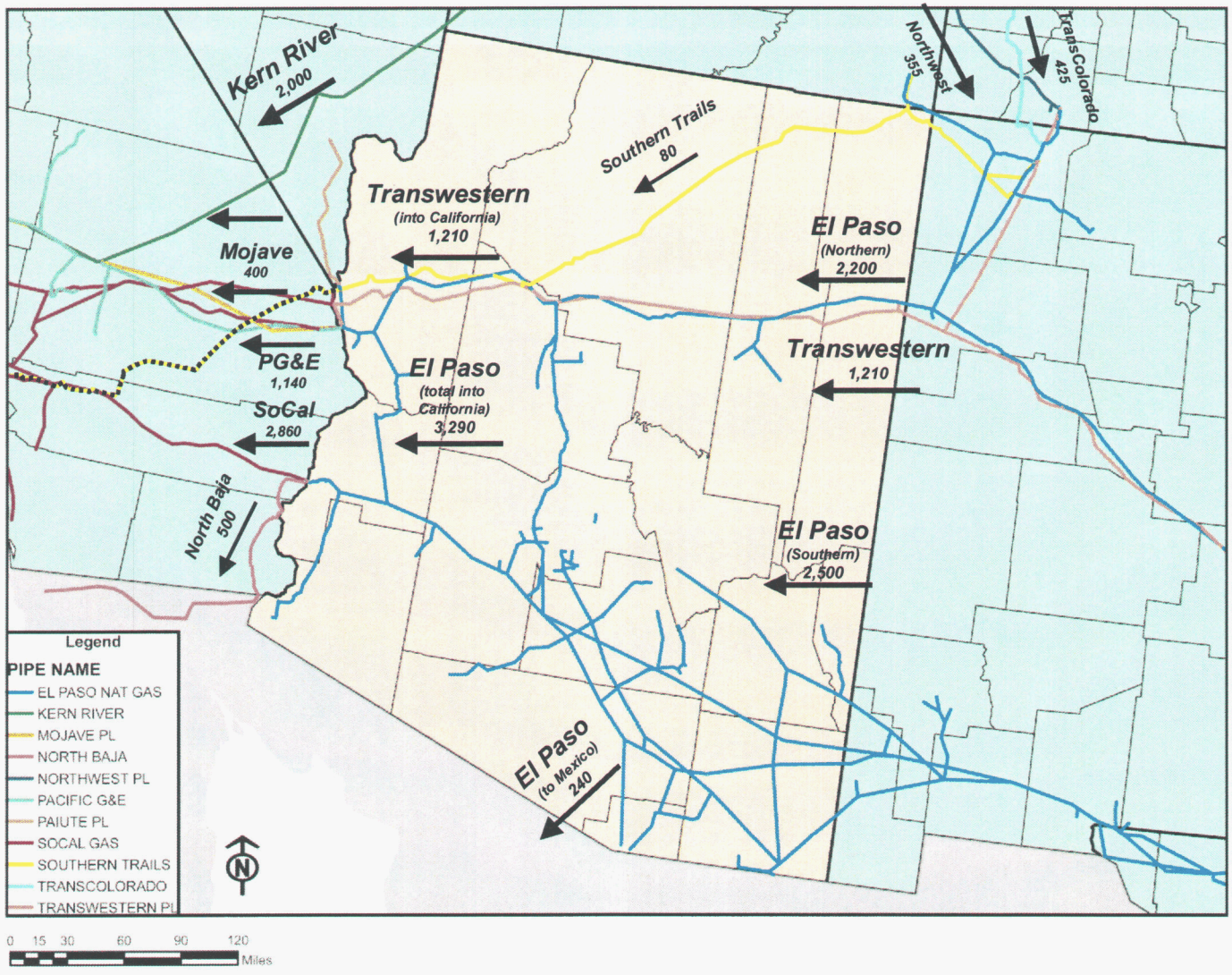

Source: Arizona Natural Gas Market and Infrastructure Study, EEA, January 5, 2006

Recent Natural Gas Market Developments in Arizona

- On June 26, 2007, FERC approved an uncontested settlement agreement in Transwestern Pipeline's rate proceeding
- On August 31, 2007, FERC approved a contested settlement agreement in El Paso Natural Gas Company's rate proceeding. Under the settlement, El Paso will file its next rate case in June 2008.
- The ACC filed in support of the Transwestern rate case settlement and designated itself a non-opposing party in regard to the El Paso rate case settlement
- In September 2006, Transwestern filed with FERC for a certificate of convenience and necessity for its Phoenix Expansion Project that would bring a new lateral into central Arizona. Transwestern expects the project to be in service in 2008.
- The Costa Azul liquid natural gas import facility in Baja Mexico is expected to begin commercial operations in 2008
- El Paso continues to pursue a natural gas storage project in Pinal County, but to date there has been no certificate filing at FERC

The Northern Arizona Energy Project

- The project could access natural gas supplies via the El Paso, Transwestern, and Southern Trails pipelines
- The application indicates the plant will use 1,750 MMBtus of natural gas per hour. If the unit operated 5,000 hours per year, annual natural gas consumption would be 8,750,000 MMBtus

Growing Dependence on Natural Gas

- In recent years, Arizona has relied heavily on natural gas to meet its growing demand for electricity, and this project represents a further step in Arizona's growing reliance on natural gas
- This growing reliance on natural gas in Arizona and other parts of the country as the fuel of choice for electric generation raises a variety of technical and policy issues, both locally and nationally
- The recent announcement by the Bowie Generating Station that they will abandon a plan to use coal gassification as the primary fuel source, and will instead revert to natural gas as the sole fuel source, exacerbates Staff's concern
- Natural gas is the electric generation fuel source avenue of least resistance today. As such, Arizona and the United States are likely to continue relying on natural gas for most large scale new electric generation projects in the near term future.

What Are the Likely Impacts of Growing Dependence on Natural Gas?

- It is unclear where significant additional volumes of natural gas for electric generation will come from in the future if reliance and demand for natural gas continues to grow
- Higher and more volatile natural gas and electricity prices
- Growing reliance on LNG imports in a pattern reminiscent of the United States' oil import dependency
- The long term undermining of portions of the United States' industrial base
- Supply reliability concerns in areas such as Arizona, that do not have access to significant natural gas storage assets, particularly in market areas, such as Phoenix

Summary

- Commission Staff is concerned with Arizona's growing reliance on natural gas for electric generation
- However, given the peaking nature of this project, which is a role traditionally served in large part by natural gas plants, Staff's concerns in this particular case are lessened

Proposed Conditions

If the application in this case is approved, Staff recommends adoption of the following natural gas-related conditions:

- Applicant will participate in good faith in Arizona and regional workshops and other assessments of the natural gas infrastructure and market.
- Applicant shall pursue all necessary steps to ensure a reliable supply and delivery of natural gas for the Project.

These conditions have been adopted in a number of other recent siting cases for natural gas-fired electric generation stations, including Case No. 116 for the proposed La Paz generating facility and Case No. 114 for the proposed Wellton-Mohawk generating facility.

Arizona Corporation Commission

Docket No. L-00000FF-07-0134-00133

Northern Arizona Energy Project

Presentation of Staff Witness
Prem Bahl

September 17, 2007

ALL-STATE LEGAL®
EXHIBIT
S-2
admitted

ACC Staff Witness

Name: **Prem Bahl**

Title: **Electric Utilities Engineer**

Employer: **Arizona Corporation Commission**

Address: **Utilities Division**
1200 W. Washington
Phoenix, AZ 85007

Professional Background

- M.S.E.E. – South Dakota State University (1972)
- Registered P.E. (Arizona) – Electrical (1978)
- 15 Years as Staff Engineer with the Arizona Corporation Commission; two years as Chief Engineer with RUCO; twenty years with Electric Utilities in U.S. and India; and five years with Consulting Engineering firms ~ Commonwealth Associates in Michigan; R.W. Beck Associates in Phoenix, Arizona; and Ralph M. Parsons in Pasadena, California

Purpose of Testimony

- **Establish Hearing Record for Commission Consideration of its Balancing Test**
- **Staff's Technical Assessment of Project**
  - Justification of Need
  - System Reliability based on the System Impact Studies ("SIS") results
  - Staff's Assessment

A.R.S. §40-360-07.B
ACC Balance Test

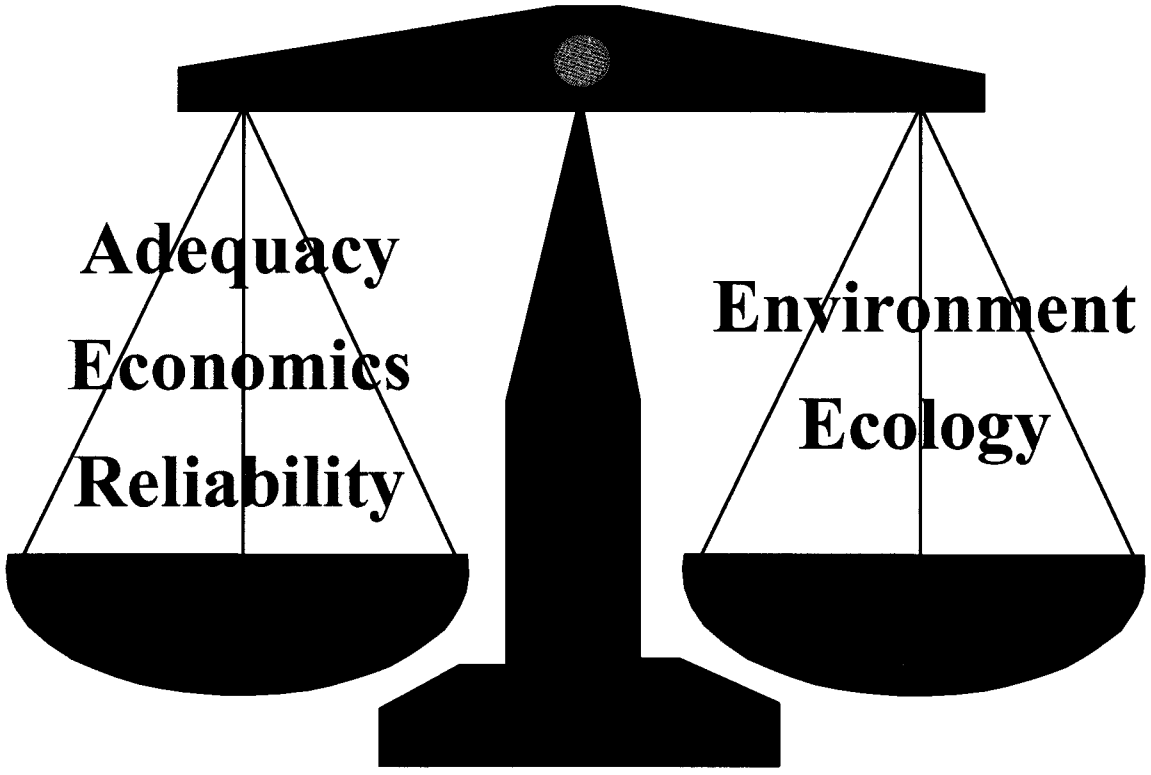

Public Interest

Adequacy and Reliability

Reliability is comprised of two components:

Adequacy - The ability of the electric systems to supply the aggregate electrical demand and energy requirements of their customers at all times, taking into account scheduled and reasonably expected unscheduled outages of system elements."

Security - The ability of the electric systems to withstand sudden disturbances such as electric short circuits or unanticipated loss of system elements."

Additional Staff Proposed Measures of Reliability

- New power plants must have sufficient interconnected transmission capacity to reliably deliver their full output without use of remedial action schemes or displacing generation at the same interconnection for single contingency (N-1) outages

- Membership of Western Electricity Coordinating Council ("WECC")

Project Description

- Northern Arizona Energy Project ("Project" or "Plant") is comprised of four simple cycle gas-fired GE LM6000 combustion turbines totaling 175 MW

- The output of the Plant will be delivered to the existing 230 kV Griffith Substation over a double circuit line, approximately one quarter mile long

- The two existing 230 kV lines emanating from the Griffith Substation are connected to Western Area Power Administration's ("Western") McConnico and Peacock Substations (see next slide)

Griffith-McConnico-Peacock 230kV

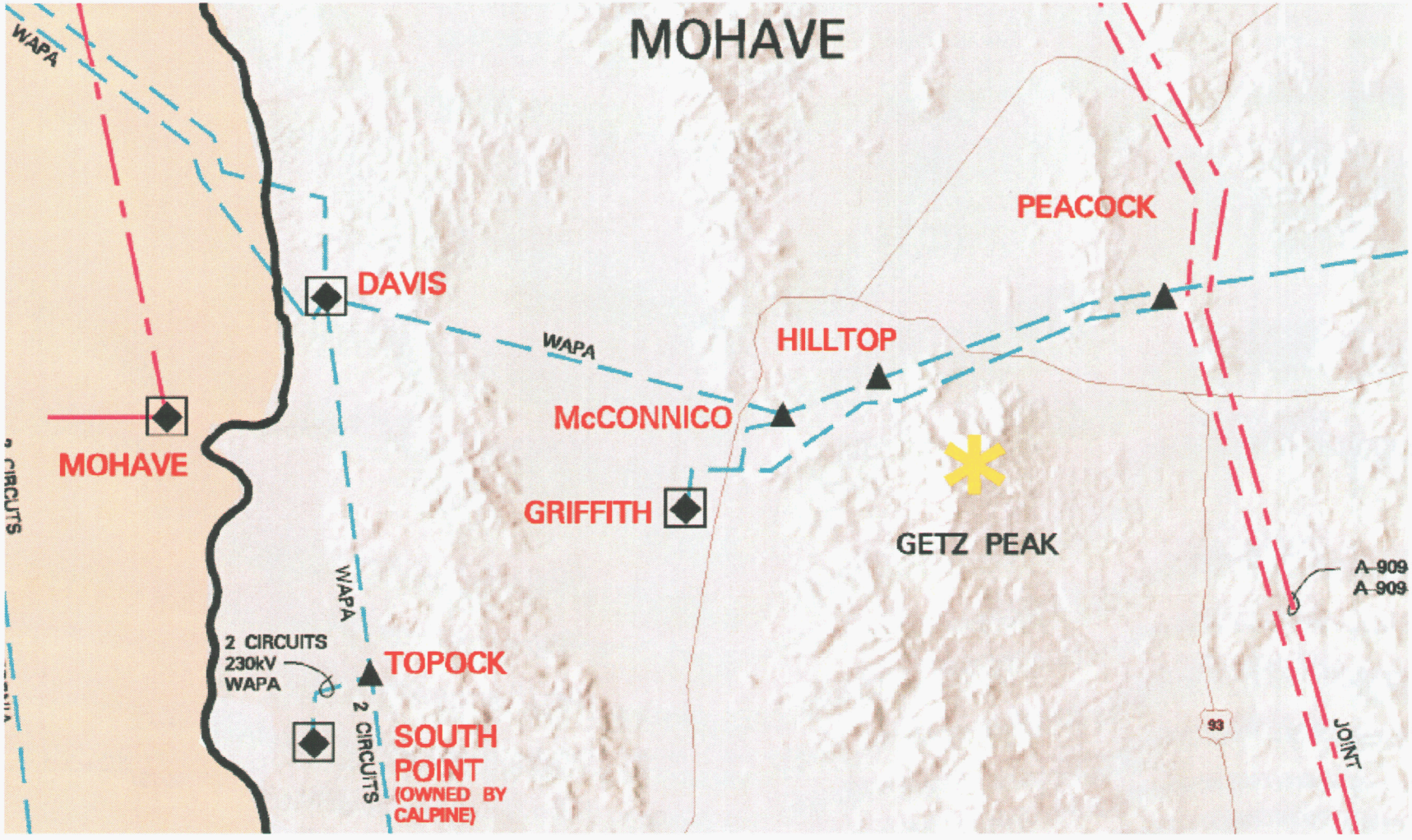

Benefits of Proposed Project

- **Provides new peaking generation resource in the Mohave County**
  - Helps in meeting growing peaking load requirements in the Mohave County and in the rest of the state, being interconnected at the Peacock Substation on the 345 kV Mead-Phoenix line
- **Utilizes existing infrastructure**
  - Requires no new transmission lines to deliver the output of the plant by expanding the existing Griffith Substation for a short interconnection

Staff's Assessment

- **Staff's preliminary assessment, prior to it's review of the SIS, is that the Northern Arizona Energy Project is needed and that preliminarily the Applicant has met the need justification burden**
- **The Applicant has obtained a waiver for 90 days to submit the System Impact Studies ("SIS") prior to filing its Application for the grant of Certificate of Environment Compatibility ("CEC")**

Staff's Assessment (contd.)

- **Staff proposes the following conditions in this proceeding at this time:**
  - Applicant or its affiliate company will become member of WECC and file an executed copy of its WECC Reliability Management System ("RMS") Generator Agreement with the Commission
  - Applicant will file a copy of the Agreement with Western for the Plant's Control Area operation
- **Additional questions and issues may arise from the final SIS and EA. Staff reserves the right, in a subsequent hearing, to conduct further cross-examination of the Applicant and propose additional conditions as may be necessary for the grant of a CEC, resulting from Staff's analysis of the SIS and other matters raised in the hearings in this proceeding.**

Questions ?

Arizona Corporation Commission

Northern Arizona Energy Project

Summary of System Impact Study

Prem K. Bahl, ACC Staff

Presented to
The Power Plant & Line Siting Committee
September 17 & 18, 2007

ALL-STATE LEGAL®
EXHIBIT
S-3
admitted

Overview

- Project description
- System Impact Study Overview
- Components of System Impact Study
- Western Area Power Administration technical study criteria based on WECC Reliabilty criteria and NERC Planning Standards
- Power Flow Analysis
- Post-Transient Power Flow Analysis
- Transient Stability Analysis
- Short Circuit Analysis
- Summary of System Impact Study Results
- Commission Staff Conclusions & Recommendations

Project Description

- **On March 2, 2007, Northern Arizona Energy, LLC ("NAE" or "Applicant"), applied to the Arizona Corporation Commission ("Commission") for a Certificate of Environmental Compatibility ("CEC") for the construction of the Northern Arizona Energy Project ("NAEP" or "Project").**

- **The Project consists of four simple cycle gas fired generating units, 45 MW each, with a total plant capacity of 175 MW.**

Project Description (contd.)

- NAEP is proposed to be interconnected with the existing 230 kV Griffith Substation via a double circuit 230 kV transmission line.

- Pursuant to A.R.S. 40-360.02(B) and 40-360.02(C)(7), an applicant is required to file a Systems Impact Study ("SIS" or "Study") with the Commission. The Applicant received an extension of time to file the SIS. The Applicant docketed the SIS on July 26, 2007.

Components of System Impact Study

The Study simulated the following technical analyses as part of the SIS:

- **Power flow analysis**
- **Post-transient power flow analysis**
- **Transient stability analysis**
- **Short circuit analysis**

- **Performance of the transmission system was measured against the WECC Reliability Criteria and NERC Planning Standards**

WECC Reliability Criteria and NERC Planning Standards

- Western Area Power Administration ("Western" or "WAPA") technical study criteria was based on the following WECC Reliabilty criteria and NERC Planning Standards:
  - N-0 (Base Case – no contingency)
  - N-1 (Single contingency)
  - N-1-1 (Non-simultaneous double contingency)
  - N-2 (Double contingency)

- Comprehensive cases were developed to represent 2008 system peak load conditions, and the following simulations were conducted for each criteria listed above.

Power Flow Analysis

- **Power Flow Analysis studied 2 alternatives of displacing NAEP generation: 1) Nevada generation reduced to accommodate NAEP generation and 2) NAEP generation serves regional load growth.**

- **In addition, the Liberty Phase Shifting Transformer ("Liberty PST") was modeled using 2 conditions: 1) in service with a south to north flow of 450 MW, and 2) bypassed.**

Power Flow Analysis (contd.)

- **Power Flow scenarios simulated these various potential transmission schedules. The following schedules refer to maximum plant export (175 MW) outside Arizona with minimum (off-peak) and maximum (on-peak) generation dispatch in the Western's area in Arizona:**
  - **NAEP displaces Nevada generation with minimum generation dispatch in Western's system**
  - **NAEP serves incremental load growth with minimum generation dispatch in Western's system**
  - **NAEP displaces Nevada generation with maximum generation dispatch in Western's system**
  - **NAEP serves incremental load growth with maximum generation dispatch in Western's system**

Power Flow Analysis (contd.)

- **NAEP Displacing Nevada Generation**
  - **NERC/WECC Category B contingency affected elements identified when Liberty PST was in service at 450 MW.**
  - **Loss of North Gila-Imperial Valley 500 kV line affects Blythe-Niland 161 kV line.**
  - **Loss of the Peacock-Mead 345 kV line or the Mead 345/230kV transformer overloads the Davis-McConnico 230 kV line by 21%.**
  - **Remaining thermal impacts on the transmission elements were observed under N-1-1 contingencies. The most severe is for loss of the Peacock 345/230 kV transformer, then loss of the Davis-McConnico 230kV line or vice versa with maximum NAEP and Griffith generation on line.**
  - **All Griffith and NAEP generation cannot be on line when the Peacock 345/230 kV transformer and Davis-McConnico 230 KV line are in operation. In addition, voltage violations were identified for all N-1-1 contingencies.**

Power Flow Analysis (contd.)

- **NAEP Generation Serving Regional Load Growth:**

  - **Only 1 NERC/WECC Category B contingency affected element triggered when the Liberty PST was in service at 450 MW. Loss of the Peacock-Whitehill 345 KV line increases power flow to the Davis-McConnico 230 kV line by 16.7%. Also, loss of the Whitehill-Mead 345 kV line or Mead 345/230 kV transformer increases power flow to the Davis-McConnico 230 kV line by 9.3%.**

  - **Remainder of the thermal overloads on the transmission system were observed under N-1-1 contingency conditions. Similar to study case where NAEP generation was displaced by Nevada generation, the most severe is for loss of the McConnico 230 kV line or vice versa with maximum NAEP and Griffith generation on line.**

  - **Power flow to Round Valley-Peacock 230 kV and Prescott-Yavapai 230 kV lines significantly increased as a result of NAEP. This indicates that all Griffith and NAEP generation cannot be on line when the Peacock 345/230 kV transformer and Davis-McConnico 230 kV line are open.**

  - **In addition, voltage violations were identified for all N-1-1 contingencies.**

Power Flow Analysis (contd.)

- **Power Flow Mitigation**

- The NAEP will be subject to generation curtailment based on flow limits during N-1 conditions for the following contingencies:

1) **Mead 345/230 kV transformer**
2) **Peacock-Mead 345 kV line**

- In addition, the project is subject to generation curtailment for any of the identified N-1-1 contingencies. The mitigation method involves generation curtailment or generation run back to be designed in accordance with WECC/NERC design, operations and reliability criteria.

Post-Transient Power Flow Analysis

- Two post-project contingencies yielded voltage deviations greater than WECC Performance of 5%.
- Post transient voltage deviations will be corrected with use of the flow-limit mitigation.
- Results between the Project displacing Nevada generation and the Project serving regional load were similar in voltage deviations.
- Liberty PST did not significantly skew the post-transient voltage results.
- Loss of the Peacock 345/230 kV transformer and Davis-McConnico 230 kV line results in no numerical solution.
- With use of flow limits, the post-transient voltage deviations from the NAEP does not have a negative impact.

Transient Stability Analysis

- Completed for all post-project conditions, including Project generation being displaced by Nevada generation and Project generation serving regional load. In addition, the Liberty PST was modeled in-service at 450 MW (south-to-north) and by-passed.
- All N-1 contingencies in the WAPA-DSW system showed sufficient damping with no WECC performance criteria violations.

Transient Stability Analysis (contd.)

- However, there were WECC performance criteria violations for 2 N-1-1 contingencies.
  - Power flow results identified that with the Griffith-Peacock 230 kV line out-of-service and loss of the Davis-McConnico 230 kV line, the Hilltop-McConnico 230 kV and Hilltop-Peacock 230 kV lines will thermally overload with maximum NAEP and Griffith generation on-line.
  - Transient stability results also identified that maximum NAEP and Griffith generation will result in the WECC Performance criteria standards to be violated. The Hilltop 230 kV bus would experience a 31.1% voltage dip and the Griffith 230 kV bus would experience a frequency dip of 59.5 Hz.

Transient Stability Analysis (contd.)

- Power flow results identified that a flow limit will be required to ensure that the affected elements are not thermally overloaded under these conditions.
- Power flow results also identified that with the Peacock 345/230 kV transformer out-of-service and loss of the Davis-McConnico 230 kV line, the Round Valley –Peacock 230 kV, Round Valley-Prescott 230 kV and Prescott-Yavapai 230 kV lines will thermally overload with maximum NAEP and Griffith generation online. The sum of Griffith and NAEP generation with the Peacock 345/230 kV transformer OR the Davis-McConnico 230 kV line open must remain at or below 520 MW to prevent system instability.

Short-Circuit Duty Analysis

- Only 3-phase fault analysis was completed since the negative sequence data was not available
- Single-phase-to-ground short-circuit duties will be provided in the completed Facilities Study.
- Results identified that the NAEP did not trigger any circuit breaker rating violations.

Summary of System Impact Study Results

- There is not a significant difference between the Northern Arizona Energy Project generation being displaced by generation outside the WAPA-DSW system and the NAEP serving regional load growth – results of the two scenarios were very similar. However, operation of the Liberty phase-shifting transformer did result in affecting the power flow results.

- With inclusion of the Project, the post-transient power flow analysis and short-circuit analysis did not identify any negative effects to the system.

- Operational flow limits will be required to mitigate power flow and transient stability issues during N-1 and N-1-1 conditions.

Summary of System Impact Study Results (contd.)

- No system impacts under normal Base Case conditions (N-0) cases and NAEP Generation curtailment is not required.

- No system impacts under N-1 contingencies, with the Liberty Phase Shifter (PST) by-passed. Thus NAEP Generation curtailment is not required.

- Only with Liberty PST operating, with 450 MW (max) - south to north - two (2) N-1 cases yield system impacts as follows:
  - Contingency 1: Loss of Mead 345/230 kV transformer overloads WAPA's Davis-McConnico 230kv line
  - Contingency 2: Loss of Peacock-Mead 345kV line overloads Davis-McConnico 230kv line

Summary of System Impact Study Results (contd.)

- These two N-1 contingencies would require NAEP generation curtailments of approximately 75 MW, which depends on system conditions.
  - According to Western Operations, the Liberty PST operated between 8 and 10 times per year for the last 10 years.
  - Operation of the Liberty PST is according to a contract between Western and the Operator of the WECC accepted East of River ("EOR") marketing path. The Liberty PST holding 450 MW is a critical component in maintaining the EOR path rating.

Summary of System Impact Study Results (contd.)

- **Three N-1-1 contingencies were identified which would require all of the NAEP generation to be tripped and several other N-1-1 contingencies will require generation curtailments.**
- **Impact of the following two N-1-1cases:**

  A1. Davis – McConnico 230 kV line

  A2. Griffith – Peacock 230 kV line

  - **Overload on Hilltop – Peacock 230 kV line**

  B2. Peacock 345/230 kV transformer

  B3. Davis – McConnico 230 kV line

  - **Overload on Prescott – Yavapai 230 kV line**
  - **The Study indicates that WAPA will have operational solutions for the above outages.**

Summary of System Impact Study Results (contd.)

- Study indicates that reliable operating procedures and a Remedial Action Scheme ("RAS") is required for the NAEP interconnection.
- Study indicates that Western would modify existing Liberty PST operating procedures and design appropriate RAS for specified N-1-1 contingencies concurrent with Liberty PST operation.

System Impact Study Results (contd.)

- The Study indicates that Western will perform detailed operating study and define solutions to mitigate any potential unreliable system conditions.
- Western will enter into a Facility Study ("FS") Agreement with the Applicant after the release of the SIS. The FS will include the identification of equipment additions and modifications required for the NAEP interconnection.
- According to Western, the presently established procedures for the Liberty PST operation will continue to be followed after the commercial operation of NAEP.

Conclusions & Recommendatios

- **Based on Staff's review of WAPA's technical studies and Staff's discussions with WAPA officials and with the USE Consultant who performed the studies for Western, and with NAEP Consultant, Staff concludes as follows:**

- **Western's Liberty PST Operation**
  - **Required to preserve East of River contract path**
  - **Operation of Liberty PST is very infrequent:**
  - **Operated approximately 10 times per year for the past ten years**
  - **Rarely operates at or near maximum of 450 MW, and only 450 MW northbound impacts NAEP operation**
  - **Probability of Liberty PST in operation at 450 MW flows northbound and simultaneous N-1 contingencies is extremely low**
  - **Maximum NAEP generation curtailment for low probability N-1 Contingencies is 75 MW (2 units) if Liberty PST is operating at maximum 450 MW northbound.**

Conclusions & Recommendations (contd.)

- **The Study indicates system stability under all post-transient power flow scenarios.**

- **The study indicates no change in the short circuit duty of equipment in the interconnected transmission grid under all contingency scenarios.**

- **Operating Studies will be performed if Southwest Power Partners, LLC ("SWPP") chooses to proceed with the interconnection process. The Operating Studies will analyze additional system conditions and define overloaded elements and/or voltage violations as a result of the NAEP. In addition, extreme WECC Category D contingencies will be studied. Additional flow limits and corresponding generation reductions may be identified during the operation studies as well.**

Conclusions & Recommendations (contd.)

- **Staff recommends that the Applicant comply with requirements of the Facility Studies by making equipment additions and modifications, and implement WAPA's solutions resulting from operational studies. However Applicant shall do so without the need to implement a RAS for the NAEP interconnection for N-1 contingencies.**

- **Staff further recommends that the Applicant file with the Commission the Facility Study Agreement with Western as soon as available, but no later than 90 days before commercial operation of the plant. The FS Agreement should include details of equipment additions and modifications required for NAEP interconnection.**

- **Staff further recommends that the CEC for the NAEP be granted subject to the Applicant's commitment to all mitigation measures indicated per the FS Agreement, and its agreement to take whatever measures may be necessary to ensure compliance with all WECC/NERC standards without the implementation of a RAS for the NAEP interconnection for N-1 contingencies. To the extent that any mitigation measures involve a substantial change to the existing infrastructure, Applicant shall seek authority from the Commission to amend its CEC.**

Questions ?

USGS
science for a changing world

ALL-STATE LEGAL®
EXHIBIT
S-4
admitted

Prepared in cooperation with the
ARIZONA DEPARTMENT OF WATER RESOURCES

Hydrogeologic Investigation of the Detrital, Hualapai, and Sacramento Valleys of Northwestern Arizona:

A Project of the Rural Watershed Initiative

The Detrital, Hualapai, and Sacramento Valleys are broad, intermountain desert basins in Mohave County, northwestern Arizona, and are home to residents in the city of Kingman and several rural communities (fig. 1). Ground water is the primary source of water in these valleys and is essential for many economic and cultural activities. As in many parts of the Western United States, population growth in these valleys is substantial. From 2000 to 2004, the population of Kingman grew from 20,100 to 24,600—an increase of 22 percent (Arizona Department of Economic Security, 2005). During the same time period, the population of Mohave County increased by 16 percent. Management of the available ground-water resources in these valleys guided by a comprehensive scientific understanding can help the growing communities to meet their needs in a sustainable manner.

In 2005, the U.S. Geological Survey (USGS) began an investigation of the hydrogeology of the Detrital, Hualapai, and Sacramento Valleys in cooperation with the Arizona Department of Water Resources (ADWR) as part of the Rural Watershed Initiative (RWI), a program established by the State of Arizona and managed by the ADWR. Other projects in the RWI program include investigations that began in 2005 in the middle San Pedro Basin and the Willcox and Douglas Basins, and investigations that began in 1999 in the Coconino Plateau, the Mogollon Highlands, and upper and middle Verde River study areas (http://az.water.usgs.gov/rwi-ii/).

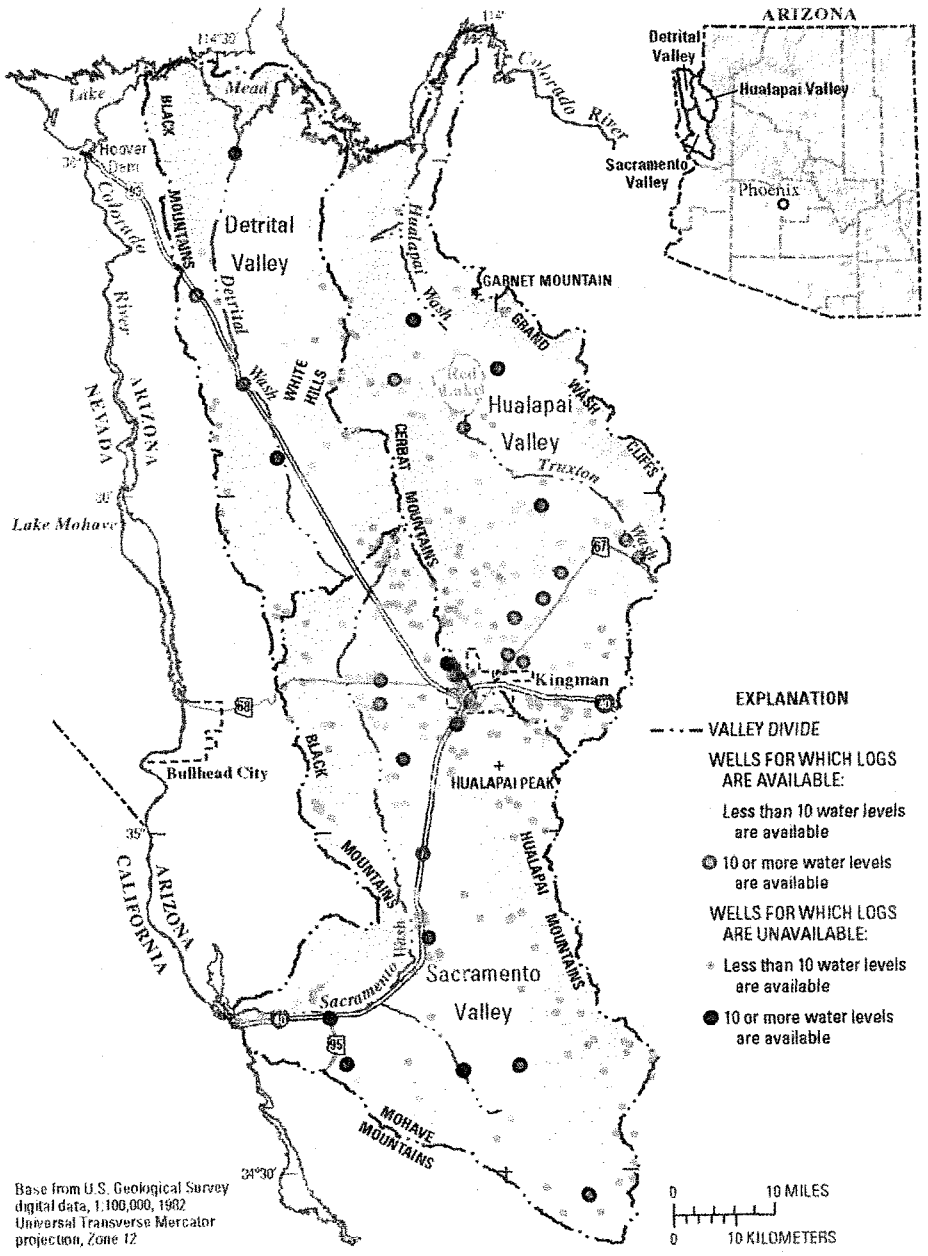

Figure 1. Physiography and location of water-level and well-log data for Detrital, Hualapai, and Sacramento Valleys, northwestern Arizona.

U.S. Department of the Interior
U.S. Geological Survey

Printed on recycled paper

Fact Sheet 2006–3008
March 2006

The primary objective of this investigation is to improve the understanding of the hydrogeologic systems of Detrital, Hualapai, and Sacramento Valleys. This will be accomplished by:

1. Assessing the current knowledge of the ground-water flow system and existing data-collection networks, and identifying additional data needs.

2. Improving the understanding of the extent and lithology of geologic units and structures, and their relation to the storage and movement of ground water.

3. Improving the understanding of ground-water movement and the estimates for ground-water budget terms, including recharge, discharge, and total water in storage.

4. Evaluating the ground-water quality for key water uses.

5. Establishing a hydrologic-monitoring network to detect and characterize changes in aquifer conditions.

6. Informing the hydrologic community and valley residents about hydrologic conditions.

Physical Setting

The Detrital, Hualapai, and Sacramento Valleys are three distinct northwest-southeast trending alluvial basins in the Basin and Range Physiographic Province. The valley floors of Detrital and Hualapai Valleys generally slope downward to the north, and the valley floor of Sacramento Valley generally slopes downward to the south. Valley floor elevations range from about 3,500 ft near Kingman to about 500 ft at the mouth of Sacramento Wash. Mountain crests rise as much as 5,500 ft above valley floors, and the highest mountain in the study area is Hualapai Peak at 8,417 ft.

The climate of the valleys is arid to semiarid with hot summers and mild winters. Maximum daily temperatures in the valley floors typically are between 90 and 110°F during the summer, and between 50 and 70°F during the winter (Western Regional Climate Center, 2005). Annual precipitation on the valley floors ranges from about 5 to 10 in. Valley floors generally are covered with sparse desert vegetation (fig. 2) owing to the hot temperatures and little precipitation. Shrubs and trees cover mountain slopes and peaks in the higher elevations where temperatures are cooler and precipitation is greater. Annual precipitation in the mountains ranges from about 10 to 15 in.

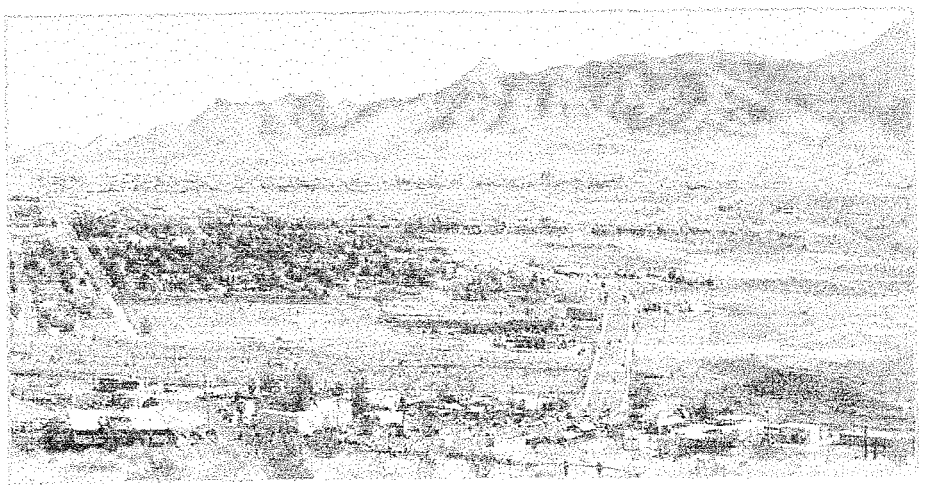

Figure 2. Desert vegetation and municipal development of the city of Kingman in Hualapai Valley.

Geology

The structural basins of Detrital, Hualapai, and Sacramento Valleys were formed during the Basin and Range disturbance, in which mountain ranges and basins were formed on adjacent sides of high-angle normal faults (fig. 3). The bedrock of the mountains that separate the valleys consists of granitic, metamorphic, sedimentary, and volcanic rocks (fig. 4). In most areas, the bedrock is relatively impermeable compared to the basin fill and forms barriers to ground-water movement in the basin-fill aquifer. The Grand Wash Cliffs along the eastern margin of the Hualapai Valley consist of Paleozoic sedimentary rocks that extend eastward and mark the boundary between the Colorado Plateau and Basin and Range Physiographic Provinces (Gillespie and Bentley, 1971).

The structural basins of the Detrital, Hualapai, and Sacramento Valleys contain basin fill (fig. 3) that ranges in thickness from a veneer along the mountain fronts to more than 5,000 ft in parts of each valley (Freethey and others, 1986; fig. 4). The basin fill is divided into older, intermediate, and younger hydrogeologic units (Gillespie and Bentley, 1971). Older basin fill is stratigraphically the oldest and deepest deposit, and consists of moderately consolidated fragments of rocks eroded from the surrounding mountains in a

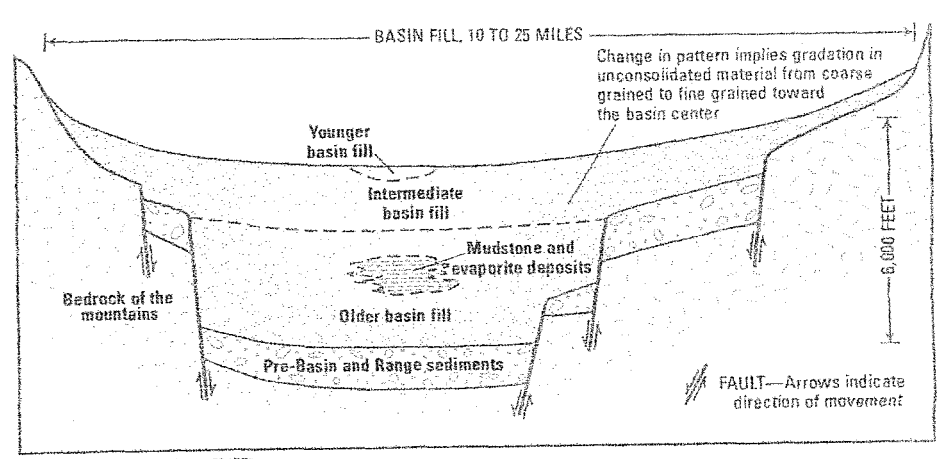

Figure 3. Generalized hydrogeologic section of the Detrital, Hualapai, and Sacramento Valleys (modified from Anderson and others, 1992).

silty-clay or sandy matrix. The grain size decreases from pebble- and boulder-size fragments in the fanglomerate near the mountains to coarse sand and interbedded clay and silt in the basin center. Each valley has large areas of older basin fill where more than 55 percent of the sediments are fine grained (Freethey and others, 1986; fig. 4). In the northern parts of Hualapai and Detrital Valleys, massive evaporite deposits occur in the older basin fill (Gillespie and Bentley, 1971; Laney, 1979; Freethey and others, 1986; fig. 4). The composition of the intermediate basin fill is similar to that of the older basin fill, and the intermediate basin fill also becomes finer grained towards the basin center; however, the thickness of the intermediate basin fill is on the order of a few hundred feet rather than a few thousand feet. Thickness of the younger basin fill, which consists of Holocene piedmont, stream, and playa deposits, is also less than that of the older basin fill. In the northern parts of Detrital and Hualapai Valleys, the basin fill also includes clastic sediments, limestone, and basalt flows of the Muddy Creek and Chemehuevi Formations (Laney, 1979).

Hydrology and Water Use

Detrital, Hualapai, and Sacramento Valleys are drained by a network of streams that are intermittent or ephemeral owing to the dry climate. Detrital Wash, Hualapai Wash, and Sacramento Wash are the primary streams in their valleys and drain to the Colorado River. A topographic divide separates the northern and southern parts of Hualapai Valley. Truxton Wash, the only major stream that originates outside of the three valleys, drains part of the basin east of Hualapai Valley and flows westward into the southern part of the Hualapai Valley into Red Lake Playa (fig. 1). Streams generally flow only in response to regionally extensive winter storms or from spatially scattered summer thunderstorms. Runoff in mountain tributaries usually does not reach the valley's primary stream, but rather infiltrates the streambed sediments or evaporates. Many stream channels become poorly defined with distance from the mountain front owing to the lack of streamflow. Although the Colorado River forms a small part of the perimeter of each valley, it generally is not a significant water supply within the valleys.

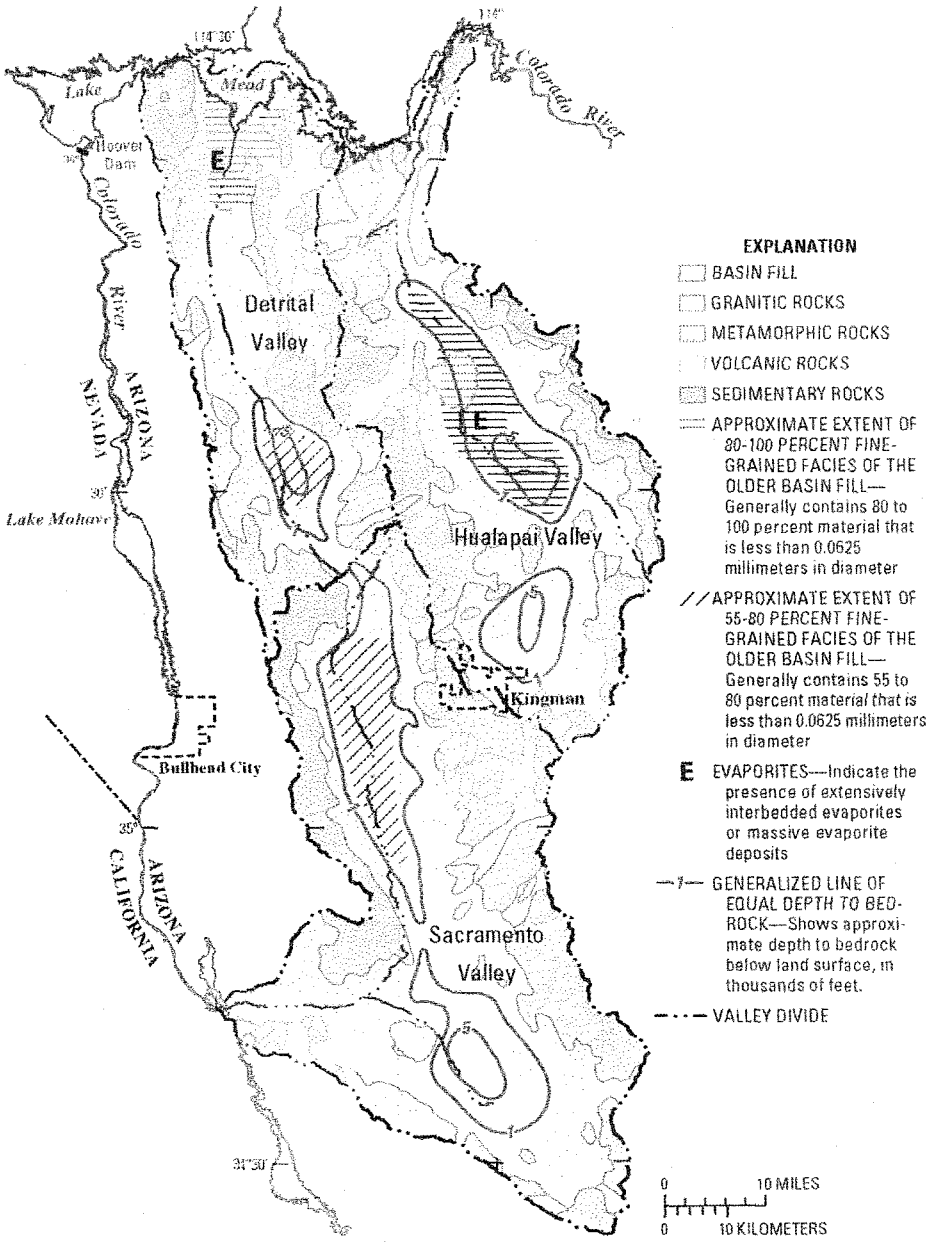

Figure 4. Bedrock geology and basin-fill characteristics in the Detrital, Hualapai, and Sacramento Valleys (modified from Richard and others, 2000, and Freethey and others, 1986).

Ground water from the basin-fill aquifer is the primary water supply for each of the three valleys. The older basin fill is the primary water-bearing deposit because intermediate and younger basin fill are above the water table in most areas. Most ground-water withdrawals in the valleys are for municipal and industrial uses; a small percentage of withdrawals is used for agriculture. The combined annual ground-water pumpage for the three valleys was about 6,600 acre-ft in 1991; by 2000, pumpage had nearly doubled to about 11,000 acre-ft (Tadayon, 2005). The combined annual recharge for the three valleys was estimated to be about 9,000 acre-ft (Freethey and Anderson, 1986), and ground-water storage was estimated to be about 13 million acre-ft (Arizona Department of Water Resources, 1994). Regional ground-water movement in the basin-fill aquifer generally is from the mountain fronts towards the valley center and then along the valley axis to the Colorado River. In general, depths

to ground water are greatest in the upper parts of the valleys and decrease downgradient to within a few feet below the land surface near the Colorado River. The greatest depths to water are about 1,200 ft near the boundary between Detrital and Sacramento Valleys (Dillenburg, 1987; Rascona, 1991), and about 600 ft near Kingman in the Hualapai Valley (Remick, 1981).

Local ground water in consolidated rocks serves as a water supply in some areas, especially where rocks are faulted, fractured, and weathered (Gillespie and Bentley, 1971). In the Kingman area, volcanic rocks are locally permeable near two fault zones, and ground-water stored in the fractures has been used as part of the municipal water supply. Several springs issue from consolidated rocks and in some cases serve as water supplies for livestock and wildlife.

Water Quality

The Arizona Department of Environmental Quality has completed baseline ground-water quality studies in the Detrital (Towne, 2003) and Sacramento Valleys (Towne and Freark, 2001), and has begun a similar study in the Hualapai Valley. A total of 28 sites were sampled in Detrital Valley, and 48 sites were sampled in Sacramento Valley; sites included wells completed in basin-fill and consolidated-rock aquifers. In Detrital Valley, constituents for which 10 percent or more of the samples exceeded State or Federal water-quality standards include gross alpha, nitrate, total dissolved solids, sulfate, and manganese. In Sacramento Valley, constituents for which 10 percent or more of the samples exceeded such standards include gross alpha, nitrate, total dissolved solids, fluoride, chloride, and sulfate. In both valleys, dissolved-solids concentrations exceeded the standards more than any other constituent. On the basis of the results for all samples from each valley, the studies concluded that ground water in the Detrital and Sacramento Valleys generally met drinking-water standards.

Planned Approach

Previous studies have provided a basic understanding about the hydrogeologic systems of Detrital, Hualapai, and Sacramento Valleys; however, several aspects need refinement and improved definition for optimal management of the ground-water resources. The study will begin with a compilation of existing information to develop a hydrogeologic database for the three valleys. In addition, field surveys will be conducted to update existing data for boreholes, wells, and water levels (fig. 1). Information gained in these efforts will be used to refine the initial conceptual models of the hydrogeologic systems of the valleys and to guide data-collection efforts in the following years. A preliminary assessment indicates that more hydrogeologic information and data are available for Hualapai and Sacramento Valleys than for Detrital Valley; therefore, data-collection and analysis efforts likely will be focused on Detrital Valley. Possible data-collection and analysis efforts include:

1. Geophysical and geological investigations to define geologic features that affect storage and flow of ground water. Features include structures, such as faults, and the thickness, lateral extent, and lithology of hydrogeologic units.

2. Determination of hydraulic properties of the hydrogeologic units using field and empirical methods.

3. Determination of ground-water storage and the direction and rate of ground-water movement using water-level, geometry, and hydraulic-property information for the hydrogeologic units.

4. Determination of ground-water recharge to and discharge from the basin-fill aquifers in each valley using information gained in item 3 about ground-water movement, as well as climate, water-use, and other data.

5. Establishment of a hydrologic-monitoring network that utilizes gravity data and water-level data to assess changes in ground-water storage over time.

6. Collection and analysis of ground-water samples from several wells to further characterize the extent of high dissolved-solids concentrations in ground water and their relation to hydrogeologic factors.

—David W. Anning, Marilyn E. Flynn, and Margot Truini

References Cited

Anderson, T.W., Freethey, G.W., and Tucci, Patrick, 1992, Geohydrology and water resources of alluvial basins in south-central Arizona and adjacent states: U.S. Geological Survey Professional Paper 1406-B, 67 p. 3 pl.

Arizona Department of Economic Security, 2005, 2004 Estimates—Population growth, accessed November 21, 2005, at URL http://www.workforce.az.gov.us/.

Arizona Department of Water Resources, 1994, Arizona Water Resources Assessment, Volume I, Inventory and Analysis and Volume II, Hydrologic Summary: Arizona Department of Water Resources, 236 p.

Dillenburg, R.A., 1987, Map showing ground-water conditions in the Detrital Wash Basin Area, Mohave County, Arizona—1987: Arizona Department of Water Resources Hydrologic Map Series Report Number 14, 1 pl., scale 1:125,000.

Freethey, G.W., and Anderson, T.W., 1986, Predevelopment hydrologic conditions in the alluvial basins of Arizona and adjacent parts of California and New Mexico: U.S. Geological Survey Hydrologic Investigations Atlas HA-664, 3 pl.

Freethey, G.W., Pool, D.R., Anderson, T.W., and Tucci, Patrick, 1986, Description and generalized distribution of aquifer materials in the alluvial basins of Arizona and adjacent parts of California and New Mexico: U.S. Geological Survey Hydrologic Investigations Atlas HA-663, 4 pl.

Gillespie, J.B., and Bentley, C.B., 1971, Geohydrology of Hualapai and Sacramento Valleys, Mohave County, Arizona: U.S. Geological Survey Water-Supply Paper 1899-H, 37 p. 2 pl. scale 1:125,000.

Laney, R.L., 1979, Geohydrologic reconnaissance of Lake Mead National Recreation Area—Hoover Dam to Temple Bar, Arizona: U.S. Geological Survey Open-File Report 79–689, 42 p.

Rascona, S.J., 1991, Map showing ground-water conditions in the Sacramento Valley Basin, Mohave County, Arizona—1991: Arizona Department of Water Resources Hydrologic Map Series Report Number 21, 1 pl., scale 1:125,000.

Remick, W.H., 1981, Map showing ground-water conditions in the Hualapai Basin area, Mohave, Coconino, and Yavapai Counties, Arizona—1980: Arizona Department of Water Resources Hydrologic Map Series Report Number 4, 1 pl., scale 1:125,000.

Richard, S.M., Reynolds, S.J., Spencer, J.E., and Pearthree, P.A., 2000, Geologic map of Arizona: Arizona Geological Survey, Map 35, 1 pl., scale 1:1,000,000.

Tadayon, Saeid, 2005, Water withdrawals for irrigation, municipal, mining, thermoelectric-power, and drainage uses in Arizona, outside of Active Management Areas, 1991–2000: U.S. Geological Survey Scientific Investigations Report 2004–5293, 28 p.

Towne, D.C., 2003, Ambient groundwater quality of the Detrital Valley Basin—A 2002 Baseline Study: Arizona Department of Environmental Quality Open-File Report 2003–03, 65 p.

Towne, D.C., and Freark, M.C., 2001, Ambient groundwater quality of the Sacramento Valley Basin—A 1999 Baseline Study: Arizona Department of Environmental Quality Open-File Report 2001–04, 78 p.

Western Regional Climate Center, 2005, Arizona Climate Summaries, 2005, accessed November 21, 2005, at URL http://www.wrcc.dri.edu/summary/climsmaz.html.

For further information, contact:
David W. Anning
U.S. Geological Survey
Arizona Water Science Center
Northern Arizona Programs
2255 North Gemini Drive
Flagstaff, Arizona, 86001
Email: dwanning@usgs.gov or visit home page at http://az.water.usgs.gov

EXHIBIT
S-5
Admitted

NORTHERN ARIZONA ENERGY PROJECT
SYSTEM IMPACT STUDY

WESTERN

AREA POWER
ADMINISTRATION
DESERT SOUTHWEST REGION
Transmission Planning

Prepared by
Jeffery L. Ellis, P.E.
(Utility System Efficiencies)

Contributors
Joshua Johnston, P.E.
Leonard York
Nick Saber

Version 3.2
July 20, 2007

L-00000FF-07-0134-00133

NORTHERN ARIZONA ENERGY PROJECT
SYSTEM IMPACT STUDY

July 20, 2007
Prepared by Utility System Efficiencies, Inc.

TABLE OF CONTENTS

1 EXECUTIVE SUMMARY 1
1.1 General 1
1.2 Power Flow Analysis 2
1.2.1 Northern Arizona Energy Project Displacing Nevada Generation. 2
1.2.2 Northern Arizona Energy Project Generation Serving Regional Load Growth. 3
1.2.3 Power Flow Mitigation. 4
1.3 Post-Transient Analysis 5
1.4 Transient Stability Analysis 5
1.5 Short-Circuit Duty Analysis 5
1.6 Cost Estimate 6
1.7 Conclusions 6

2 STUDY ASSUMPTIONS 7
2.1 Pre-Project Power Flow Case Modeling 7
2.2 Post-Project Power Flow Case Modeling 8
2.3 Post-Transient Contingencies 12
2.4 Transient Stability Power Flow Cases and Dynamic Data 12
2.4.1 Transient Stability Modeling 12
2.5 Reliability Criteria 12
2.5.1 Power Flow 13
2.5.2 Transient Stability 13

3 STUDY METHODOLOGY 14
3.1 Power Flow 14
3.2 Post-Transient Analysis 15
3.2.1 Thermal & Voltage 15
3.3 Transient Stability 15
3.4 Short-Circuit Duty 16

4 RESULTS & FINDINGS 17
4.1 Power Flow Analysis 17
4.1.1 Northern Arizona Energy Project Displacing Nevada Generation. 17
4.1.2 Northern Arizona Energy Project Generation Serving Regional Load Growth. 18
4.1.3 Power Flow Mitigation. 19
4.2 Post-Transient Analysis 20
4.2.1 Northern Arizona Energy Project Displacing Nevada Generation. 20
4.2.2 Northern Arizona Energy Project Generation Serving Regional Load Growth. 21
4.3 Transient Stability Analysis 21
4.4 Short-Circuit Duty Analysis 22

5 COST AND SCHEDULE ESTIMATE 22

LIST OF APPENDICES

Appendix A - Complete List of Power Flow Results
Appendix B – Power Flow Plots
Appendix C - List of Contingencies
Appendix D – Transient Stability Modeling
Appendix E – Transient Stability Plots
Appendix F – Load Distribution and Generation Shift Factors

1 EXECUTIVE SUMMARY

1.1 General

By request of the Southwest Power Partners, LLC ("SWPP"), Utility System Efficiencies, Inc. ("USE") performed a system impact study ("SIS") for the proposed Northern Arizona Energy Project ("NAEP") with the oversight of the Western Area Power Administration ("Western"). The NAEP is proposing the addition of four simple cycle combustion turbine generator units with a gross plant output of 193.5 MW, plant auxiliary load of 13.5 MW and a net project output of 180 MW. The Project will be located on a site just north of the existing Griffith 230 kV Switchyard owned and operated by Western. The earliest proposed in-service date for commercial operation is June 1, 2008.

The Interconnection Request was deemed a completed application on September 28, 2006 and Western posted the request to the OASIS at 4:53 pm on that same day. In accordance with Section 6.1 of Attachment L to Western's OATT SWPP and Western agreed to forgo the Interconnection Feasibility Study and initiate an Interconnection System Impact Study under Section 7 of Attachment L. SWPP and Western entered into Letter Agreement No. 06-DSR-11505 for System Impact Study (SIS), dated December 4, 2007 (Agreement).

SWPP has specifically applied for Energy Resource Interconnection Service. By definition, this type of Service allows an interconnection customer to deliver the generating station's output using existing firm or non-firm capacity on an "as available" basis.

Nothing in this report constitutes an offer of transmission service or confers upon the Interconnection Customer ("SWPP") any right to receive transmission service. WAPA-DSW and other interconnected utilities may not have the Available Transmission Capacity to support the interconnection described in this report.

SWPP has indicated that utilities that serve load regional to the study area are the primary target for marketing the Project, specifically to UNS Electric Inc. However, marketing the output to entities residing in Phoenix, Southern Nevada, and California are also viable options. Therefore, a variety of scenarios were studied.

This Study simulated the following technical analyses as part of this SIS.
A. Power flow analysis
B. Post-transient power flow analysis
C. Transient stability analysis
D. Short circuit analysis

Performance of the transmission system was measured against the WECC Reliability Criteria and NERC Planning Standards.

Power flow and transient stability results demonstrate that the existing Western facilities cannot support the requested interconnection without the administration of a Remedial Action Scheme ("RAS"). The post-transient power flow analysis and short-circuit analysis did not identify any negative effects to the system. However, operational flow limits will be required to mitigate power flow and transient stability issues during N-1 and N-1-1 conditions. Results identified that the NAEP generation curtailments are not required during N-0 conditions. However, three N-1-1 contingencies were identified that would require all of the NAEP generation to be tripped and several other N-1-1 contingencies will require generation curtailments. Two (2) N-1 contingencies were identified that would require NAEP generation curtailments of approximately 75 MW when the Liberty PST is in-service. NAEP generation curtailments were not identified when the Liberty PST was by-passed.

Subsequent to the SIS and before the NAEP may operate commercially, detailed operational study work will be performed by Western Operations at the expense of SWPP. The detailed operating study will

analyze additional potential system operating conditions and define solutions to mitigate any potential unreliable system conditions. The study will also determine the impact the NAEP has on the Liberty phase shifting transformer's angle margin. If the NAEP causes a three degree or greater angle difference, additional remedial operating actions will be required.

A Facility Study ("FS") Agreement will be sent to SWPP shortly after the release of this SIS. The FS will include the identification of equipment additions and modifications required for the NAEP interconnection facilities including the necessary equipment required for the RAS.

1.2 Power Flow Analysis

The power flow analysis studied two alternatives of displacing the Northern Arizona Energy Project generation: 1) Nevada generation was reduced to accommodate the Northern Arizona Energy Project generation and 2) NAEP Energy Center generation serves the regional load growth. In addition, the Liberty phase-shift transformer ("PST") was modeled in two conditions: 1) in-service with a south-to-north flow of 450 MW and 2) by-passed.

According to Western Operations, the Liberty PST is operated between 8 and 10 times per year for the past ten years. Operation of the Liberty PST is in accordance with the contract between Western and the operator of the WECC-accepted East of River ("EOR") marketing path. The Liberty PST holding 450MW is a critical component in maintaining the EOR path rating.

The Northern Arizona Energy Project increases post-contingency power flow loading to a few elements, which are tabulated in **Tables E-1** and **E-2**. Only the highest loaded "affected elements" are tabulated. In addition, case names in column "**case**" can be referred to by the following:

1. 1-Al refers to a minimum generation dispatch in the WAPA-DSW system. In addition, the Northern Arizona Energy Project generation displaces Nevada Generation.

2. 2-LD refers to a minimum generation dispatch in the WAPA-DSW system. In addition, the Northern Arizona Energy Project generation serves incremental regional load growth.

3. 3-Al-max refers to a maximum generation dispatch in the WAPA-DSW system. In addition, the Northern Arizona Energy Project generation displaces Nevada Generation.

4. 4-LD-max refers to a maximum generation dispatch in the WAPA-DSW system. In addition, the Northern Arizona Energy Project generation serves incremental regional load growth.

Power flow plots for normal and emergency system conditions for each scenario are included in **Appendix B**. A list of contingencies simulated for each scenario are included in **Appendix C**.

1.2.1 Northern Arizona Energy Project Displacing Nevada Generation.

There were NERC/WECC Category "B" contingency affected elements identified when the Liberty PST was in-service at 450 MW. Loss of the North Gila – Imperial Valley 500 kV line affects the Blythe-Niland 161kV line; however it only slightly increases power flow to this element. Furthermore, the Blythe SPS will reduce Buck Blvd generation to mitigate the thermal overload.

Loss of the Peacock-Mead 345 kV line or the Mead 345/230 kV transformer impacts the Davis-McConnico 230 kV line by 21%. The pre-project loading was at its thermal limit, therefore, the NAEP generation further increases flow to this element.

The remaining thermal impacts on the transmission elements were observed under N-1-1 contingencies. The most severe is for loss of the Peacock 345/230 kV transformer, then loss of the Davis-McConnico 230 kV line or vice-versa with maximum NAEP and Griffith generation on-line. Under this outage condition, the power flows to the Round Valley – Peacock 230 kV, Round Valley – Prescott 230 kV and Prescott-Yavapai 230 kV lines significantly increased as a result of the Northern Arizona Energy Project.

In addition, a synchronous condenser modeled at the McConnico 230 kV bus was needed for a solution when the Liberty PST was by-passed. This identifies that all Griffith and NAEP generation can not be on-line when the Peacock 345/230 kV transformer and Davis-McConnico 230 kV line are open. Mitigation for these conditions will be further defined in the Power Flow Mitigation section.

Table E-1. 2008 Heavy Autumn Emergency Percent Loading – Displacing Nevada Generation.

				Liberty PST In-Service at 450MW (s2n)		Liberty PST By-Passed	
Case	Contingency	Affected Element	Normal/ Emergency Rating (Amps)	Pre-Project	Post-Project	Pre-Project	Post-Project
3-Al-max	N.Gila - Imperial Valley 500 kV	Blythe - Niland 161 kV	592/592	106.8	107.9	NA	NA
1-Al	Peacock - Mead 345 kV	Davis - McConnico 230 kV	1130/1243	99.1	120.3	NA	NA
1-Al	Mead 345/230 kV Transformer	Davis - McConnico 230 kV	1130/1243	99.0	120.2	NA	NA
3-Al-max	Hilltop - McConnico 230 kV Griffith - Peacock 230 kV	Davis - McConnico 230 kV	1130/1243	102.7	139.5	102.7	137.4
3-Al-max	Davis - McConnico 230 kV Griffith - Peacock 230 kV	Hilltop - McConnico 230 kV	1130/1243	103.8	141.6	103.0	137.9
3-Al-max	Davis - McConnico 230 kV Griffith - Peacock 230 kV	Hilltop - Peacock 230 kV	1130/1243	83.2	120.6	82.7	117.5
1-Al/3-Al-max	Peacock 345/230 kV Trans Davis - McConnico 230 kV	Prescott - Yavapai 230 kV	670/811	65.4	109.1	70.8	134.6
1-Al/3-Al-max	Peacock 345/230 kV Trans Davis - McConnico 230 kV	Round Valley - Peacock 230 kV	816/897	114.6	170.9	118.8	**196.4***
1-Al/3-Al-max	Peacock 345/230 kV Trans Davis - McConnico 230 kV	Round Valley - Prescott 230 kV	816/897	111.3	167.6	115.5	**192.7***

NA – indicates there were no thermal overloads triggered with the Liberty PST by-passed.
*Required a synchronous condenser for a solution. Results in a voltage collapse in the local system.

In addition, voltage violations were identified for all N-1-1 contingencies; however, they will be mitigated with the power flow mitigation.

1.2.2 Northern Arizona Energy Project Generation Serving Regional Load Growth.

There was only one NERC/WECC Category "B" contingency affected element triggered when the Liberty PST was in-service at 450 MW. Loss of the Peacock-WhiteHill 345 kV line increases power flow to the Davis-McConnico 230 kV line by 16.7%. The pre-project loading was at its thermal limit, therefore, the NAEP generation further increases power flow on this element. Also, loss of the WhiteHill-Mead 345 kV line or Mead 345/230 kV transformer increases power flow to the Davis-McConnico 230 kV line by 9.3%. The White Hills bus is proposed to support UNS load in 2009. This bus intercepts the Peacock-Mead 345 kV line.

The remainder of the thermal overloads on the transmission system were observed under N-1-1 contingency conditions. Similar to the study case where NAEP generation was displaced by Nevada generation, the most severe is for loss of the Peacock 345/230 kV transformer, then loss of the Davis-McConnico 230 kV line or vice-versa with maximum NAEP and Griffith generation on-line. Power flow to the Round Valley – Peacock 230 kV, Round Valley – Prescott 230 kV and Prescott-Yavapai 230 kV lines significantly increased as a result of the Northern Arizona Energy Project. This identifies that all Griffith and NAEP generation can not be on-line when the Peacock 345/230 kV transformer and Davis-McConnico 230 kV line are open. Mitigation for these conditions will be further defined in the Power Flow Mitigation section.

Table E-2. 2008 Heavy Autumn Emergency Percent Loading – Serving Regional Load Growth.

				Liberty PST In-Service at 450MW (s2n)		Liberty PST By-Passed	
Case	Contingency	Affected Element	Normal/ Emergency Rating (Amps)	Pre-Project	Post-Project	Pre-Project	Post-Project
2-LD	Peacock - WhiteHill 345 kV	Davis - McConnico 230 kV	1130/1243	99.3	116.0	NA	NA
2-LD	WhiteHill - Mead 345 kV	Davis - McConnico 230 kV	1130/1243	99.1	108.4	NA	NA
2-LD	Mead 345/230 kV Transformer	Davis - McConnico 230 kV	1130/1243	99.0	108.3	NA	NA
4-LD-max	Hilltop - McConnico 230 kV Griffith - Peacock 230 kV	Davis - McConnico 230 kV	1130/1243	102.7	139.4	137.4	34.6
4-LD-max	Davis - McConnico 230 kV Griffith - Peacock 230 kV	Hilltop - McConnico 230 kV	1130/1243	103.8	141.1	137.7	34.7
2-LD/4-LD-max	Peacock - White Hill 345 kV Griffith - McConnico 230 kV	Hilltop - Peacock 230 kV	1130/1243	100.3	119.2	82.7	110.3
2-LD	Peacock 345/230 kV Tran Davis - McConnico 230 kV	Prescott - Yavapai 230 kV	670/811	65.4	114.3	66.1	115.6
2-LD	Peacock 345/230 kV Tran Davis - McConnico 230 kV	Round Valley - Peacock 230 kV	816/897	114.6	173.8	114.6	174.6
2-LD	Peacock 345/230 kV Tran Davis - McConnico 230 kV	Round Valley - Prescott 230 kV	816/897	111.3	170.1	111.3	170.9

NA – indicates there were no thermal overloads triggered with the Liberty PST by-passed.

In addition, voltage violations were identified for all N-1-1 contingencies; however, they will be mitigated with the power flow mitigation.

1.2.3 Power Flow Mitigation.

Flow limits will be developed to estimate post-contingency element flows for the identified thermally overloaded elements caused by the Project. Flow limits will be used in determining the amount of generation reduction to mitigate post-contingency thermal overloads for loss of critical element(s). A list of LODF and GSF factors are tabulated in **Appendix F**, which have been calculated for all contingencies that were impacted by the Northern Arizona Energy Project. The LODF and GSF factors are key components of the flow limits.

Note, a linear analysis was used to calculate the load distribution and generation shift factors. Therefore, they do not take into account losses. This results in the load distribution factors to be smaller than a regular power flow that accounts for losses, which, may result in a lower generation reduction amount. Therefore, an additional margin should be applied to the load distribution factor.

The developed power flow mitigation were tested with both post-transient and transient stability results to ensure system reliability is maintained.

The Northern Arizona Energy Project will be subject to generation curtailments based on flow limits during N-1 conditions for the following two contingencies:

1. Mead 345/230 kV transformer,
2. Peacock – Mead 345 kV line.

In addition, the Project is subject to generation curtailments for any of the identified N-1-1 conditions. The mitigation method involving generation curtailments or generation run-back will be designed in accordance with the WECC/NERC design, operations and reliability criteria.

1.3 Post-Transient Analysis

Two post-project contingencies yielded voltage deviations greater than the WECC Performance standard of 5%. However, the post-transient voltage deviations will be corrected with use of the flow-limit mitigation. Results between the Project displacing Nevada generation and the Project serving regional load were similar in voltage deviations. In addition, operation of the Liberty PST did not significantly skew the post-transient voltage results. Tabulations of all post-transient voltage deviation results are included in **Appendix A**.

Loss of the Peacock 345/230 kV transformer and Davis-McConnico 230 kV line results in no numerical solution. This violation was identified in the power flow section of the report. Therefore, reducing the NAEP generation based on the flow limit, results in a post-transient voltage deviation of 6%, which is less than the 10% requirement.

With use of flow limits, the post-transient voltage deviations from the NAEP does not have a negative impact.

1.4 Transient Stability Analysis

Transient stability analysis was completed for all post-project conditions, which include the Project generation being displaced by Nevada generation and the Project generation serving regional load. In addition, the Liberty PST was modeled in-service at 450 MW (south-to-north) and by-passed.

All N-1 contingencies in the WAPA-DSW system showed sufficient damping with no WECC Performance Criteria violations. However, there were WECC Performance criteria violations for two N-1-1 contingencies.

Power flow results identified that with the Griffith-Peacock 230 kV line out-of-service and loss of the Davis-McConnico 230 kV line, the Hilltop-McConnico 230 kV and Hilltop-Peacock 230 kV lines will thermally overload with maximum NAEP and Griffith generation on-line. Transient stability results also identified that maximum NAEP and Griffith generation will result in the WECC Performance criteria standards to be violated. The Hilltop 230 kV bus would experience a 31.1% voltage dip and the Griffith 230 kV bus would experience a frequency dip of 59.5 Hz.

Power flow results identified that a flow limit will be required to ensure that the affected elements are not thermally overloaded under these conditions. Transient stability analysis was performed with the readjusted post-project case (i.e., flow limit requirements, which reduced the aggregate NAEP and Griffith generation). Results identified that there were no WECC Performance criteria violations with the flow limit requirements in place.

Power flow results also identified that with the Peacock 345/230 kV Transformer out-of-service and loss of the Davis-McConnico 230 kV line, the Round Valley-Peacock 230 kV, Round Valley-Prescott 230 kV and Prescott-Yavapai 230 kV lines will thermally overload with maximum NAEP and Griffith generation on-line. Transient stability results identified that the system had sustained oscillations that do not diminish with Griffith and NAEP generation greater than 520 MW, which denotes system instability. Therefore, the sum of Griffith and NAEP generation with the Peacock 345/230 kV transformer OR the Davis-McConnico 230 kV line open must remain at or below 520MW to prevent system instability.

Transient stability plots for select post-project simulations are included in **Appendix E**.

1.5 Short-Circuit Duty Analysis

The post-project base case was converted to PSS/E version 30.3.1, in order to complete the short-circuit analysis. In addition, only 3-phase fault analysis was completed since the negative sequence data was not available. Single-phase-to-ground short-circuit duties will be provided in the completed Facilities Study.

Results identified that the NAEP did not trigger any circuit breaker rating violations.

1.6 Cost Estimate

Western and SWPP attended a scoping meeting on October 23, 2006 where SWPP introduced two proposed, 230kV alternative interconnections to be considered (See Section 2.2) for the SIS. Subsequent to the scoping meeting, SWPP confirmed that alternative #1 would be the assumed electrical configuration to study. It shall be noted that both alternative configurations #1 and #2 are electrically identical with respect to what was studied in this SIS. Therefore, if SWPP should change the configuration to alternative #2 in the future, an additional SIS will not have to be performed but additional operational studies will be required to validate the reliability of the interconnection at the Project's in-service date. In addition, the Northern Arizona Energy Project will not be re-queued. However, additional costs will be incurred by SWPP should the configuration change during or after the Facility Study.

A general and preliminary cost estimate for the two proposed interconnection alternatives are shown below and the corresponding schedules are provided in **Section 5** of this report. The cost estimates include substation design, electrical equipment procurement, construction specification development, contracting, and construction.

Alternative #1 3-breaker (breaker and a half) interconnection: $4,200,000
Alternative #2 6-breaker (breaker and a half) interconnection: $7,200,000

A more detailed cost estimate will be prepared as part of the Facilities Study should SWPP decide to continue with the interconnection process. The Facility Study will also provide further details of the environmental process and construction schedule.

1.7 Conclusions

The analysis identified that there is not a significant difference between the Northern Arizona Energy Project generation being displaced by generation outside the WAPA-DSW system and the Northern Arizona Energy Project serving regional load growth – results of the two scenarios were very similar. However, operation of the Liberty phase-shift transformer did result in affecting the power flow results.

The only transient stability issue attributed to the Northern Arizona Energy Project was identified with the Griffith-Peacock 230 kV line out-of-service and loss of the Davis-McConnico 230 kV line. Results identified that with maximum NAEP and Griffith generation, the Hilltop 230 kV bus would experience a 31.1% voltage dip and the Griffith 230 kV bus would experience a frequency dip of 59.5 Hz. The stability issue could be a result of inaccurate dynamic data that was identified when the Peacock 345/230 kV transformer is out of service. Nevertheless, the stability issue can be mitigated by utilizing the developed flow limit.

Transient stability results identified that the system had sustained oscillations that do not diminish with Griffith and NAEP generation greater than 520 MW, which denotes system instability. Therefore, the sum of Griffith and NAEP generation with the Peacock 345/230 kV transformer OR the Davis-Mc Connico 230 kV line open must remain at or below 520MW to prevent system instability.

With inclusion of the Project, the post-transient power flow analysis and short-circuit analysis did not identify any negative effects to the system. However, operational flow limits will be required to mitigate power flow and transient stability issues during N-1 and N-1-1 conditions. Results identified that the NAEP generation curtailments are not required during N-0 conditions. However, three N-1-1 contingencies were identified that would require all of the NAEP generation to be tripped and several other N-1-1 contingencies will require generation curtailments. Two (2) N-1 contingencies were identified that would require NAEP generation curtailments of approximately 75 MW, which depends on system conditions.

Operating Studies will be performed should SWPP choose to proceed with the interconnection process. The Operating Studies will analyze additional system conditions and define overloaded elements and/or voltage violations as a result of the NAEP. In addition, extreme WECC Category D contingencies will be studied. Additional flow limits and corresponding generation reductions may be identified during the operational studies as well. Also, operating nomograms will be developed for NAEP generation including Griffith generators with South Point and Blythe Energy generators. Any mitigation actions would be included in Special Operating Procedures.

2 STUDY ASSUMPTIONS

This section of the report provides details pertaining to the power flow case development and an overview of major study assumptions.

2.1 Pre-Project Power Flow Case Modeling

The 2008 heavy autumn system conditions were modeled for this study. Sensitivities were simulated to determine the most stressed conditions with the WAPA (zone 191) generation at minimum and maximum levels. The following modifications were implemented to create the 2008 pre-project power flow cases:

Case 1: 2008 Heavy Autumn: Minimum Western Generation.

1. Study base case "SWPP_GRIFFITH.sav" was obtained from WAPA – Desert Southwest Region, which is an approved WATS base case.
2. WAPA modeled a plausible generation dispatch during minimum generation conditions.
3. Revised EOR9300 project upgraded ratings.
4. EOR flow was modeled at 9,300 MW in all base cases.

Case 2: 2008 Heavy Autumn: Maximum Western Generation.

1. Case 1 generation was increased. The Blythe, Davis, Griffith, Parker and South Point generation was modeled at their maximum output.

Case 3: 2008 Heavy Autumn: Minimum Western Generation – Liberty PST By-Passed.

1. By-passed the Liberty phase-shift transformer in Case 1 – Liberty flow decreased to 222 MW.
2. EOR flow readjusted to 9,300 MW.
    a. Area interchange between Area 14 (+85 MW) and 18 (-85 MW).
    b. Silver Hawk generation was reduced by 90 MW.
    c. Increased Coronado Unit 1 generation by 50 MW. Area 14 slack bus made up remaining generation.

Case 4: 2008 Heavy Autumn: Maximum Western Generation – Liberty PST By-Passed.

1. By-passed the Liberty phase-shift transformer in Case 2 – Liberty flow decreased to 187 MW.
2. EOR flow readjusted to 9,300 MW.
    a. Area interchange between Area 14 (+105 MW) and 18 (-105 MW).
    b. Silver Hawk generation was reduced by 110 MW.
    c. Increased Coronado Unit 1 generation by 50 MW. Area 14 slack bus made up remaining generation.

Table 1. Pre-Project Power Flow Case Attributes

	Liberty PST In-Service		Liberty PST By-Passed	
	Case 1 Min Gen	**Case 2 Max Gen**	**Case 3 Min Gen**	**Case 4 Max Gen**
Path 46 - West of the River	8,401	9,200	8,400	9,200
Path 49 - East of the River	9,301	9,300	9,300	9,300
Area 14 - AZ				
Load	12,253	12,259	12,253	12,259
Losses	453	458	452	452
Gen	23,695	24,581	23,795	24,684
Interchange	10,989	11,863	11,089	11,972
Zone 191 - WAPA-DSW				
Load	1151	1157	1151	1157
Losses	148	162	142	153
Gen	2,185	3,445	2,185	3,445
Interchange	553	1,794	560	1,803

2.2 Post-Project Power Flow Case Modeling

The Northern Arizona Energy Project was modeled with the following parameters, which were provided with the Interconnection Application:

1. Four (4) CT generators were modeled at the existing Griffith 230 kV Substation with a Pmax of 60.5 MW, Qmax of 37.5 MVAr, Qmin of -22.2 MVAr.
2. Four (4) 70 MVA 230/13.8 kV step-up transformers with an R, X and B of 0.00, 0.100 and 0.0, respectively were modeled.

Since the breaker configuration of the Project has not been fully determined, both configurations are illustrated in **Figures 1 and 2.** The SIS modeled configuration 1; however, it is not believed that the SIS results will be affected by either configuration.

Figure 1. Northern Arizona Energy Project, Configuration 1 single line diagram.

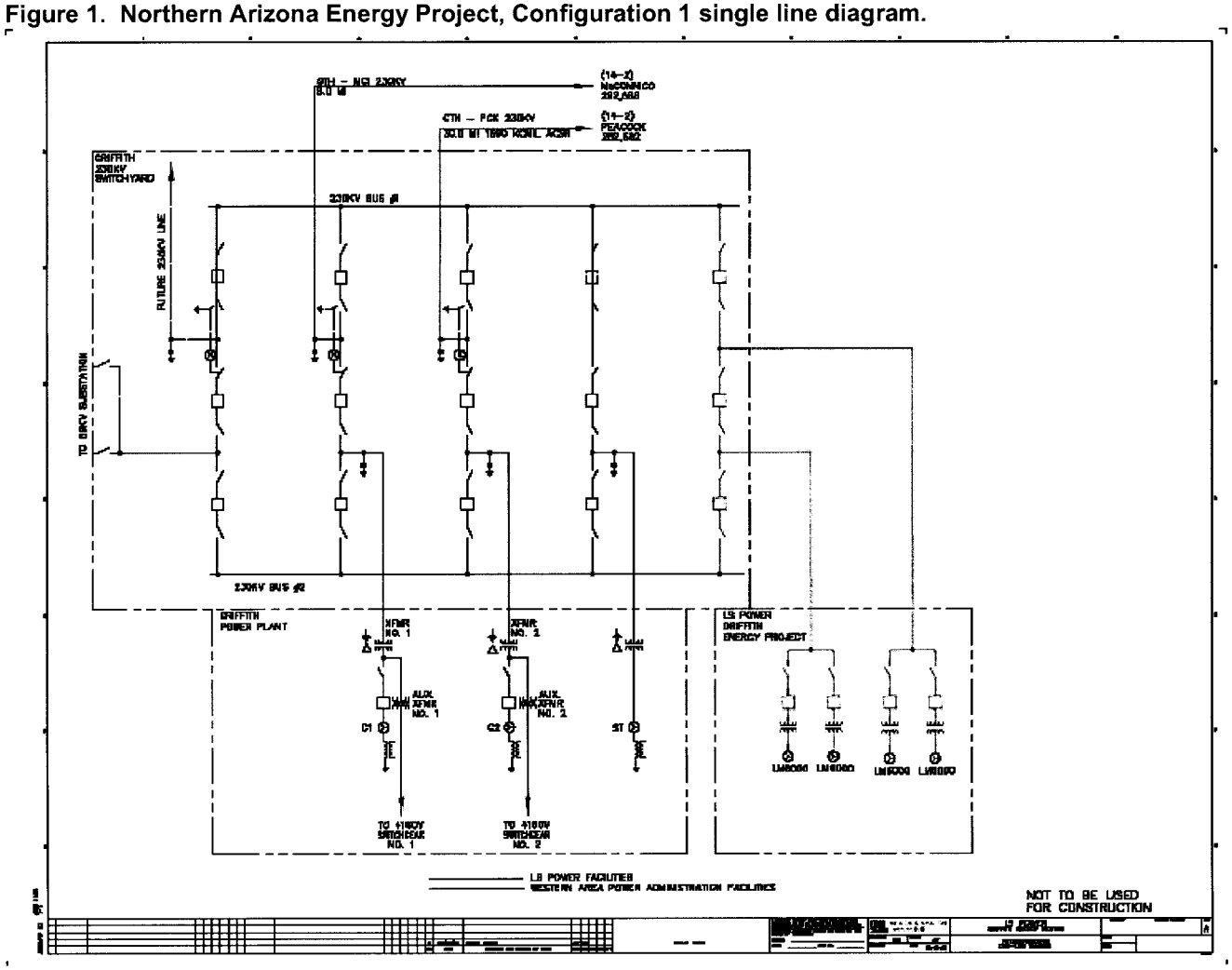

Figure 2. Northern Arizona Energy Project, Configuration 2 single line diagram.

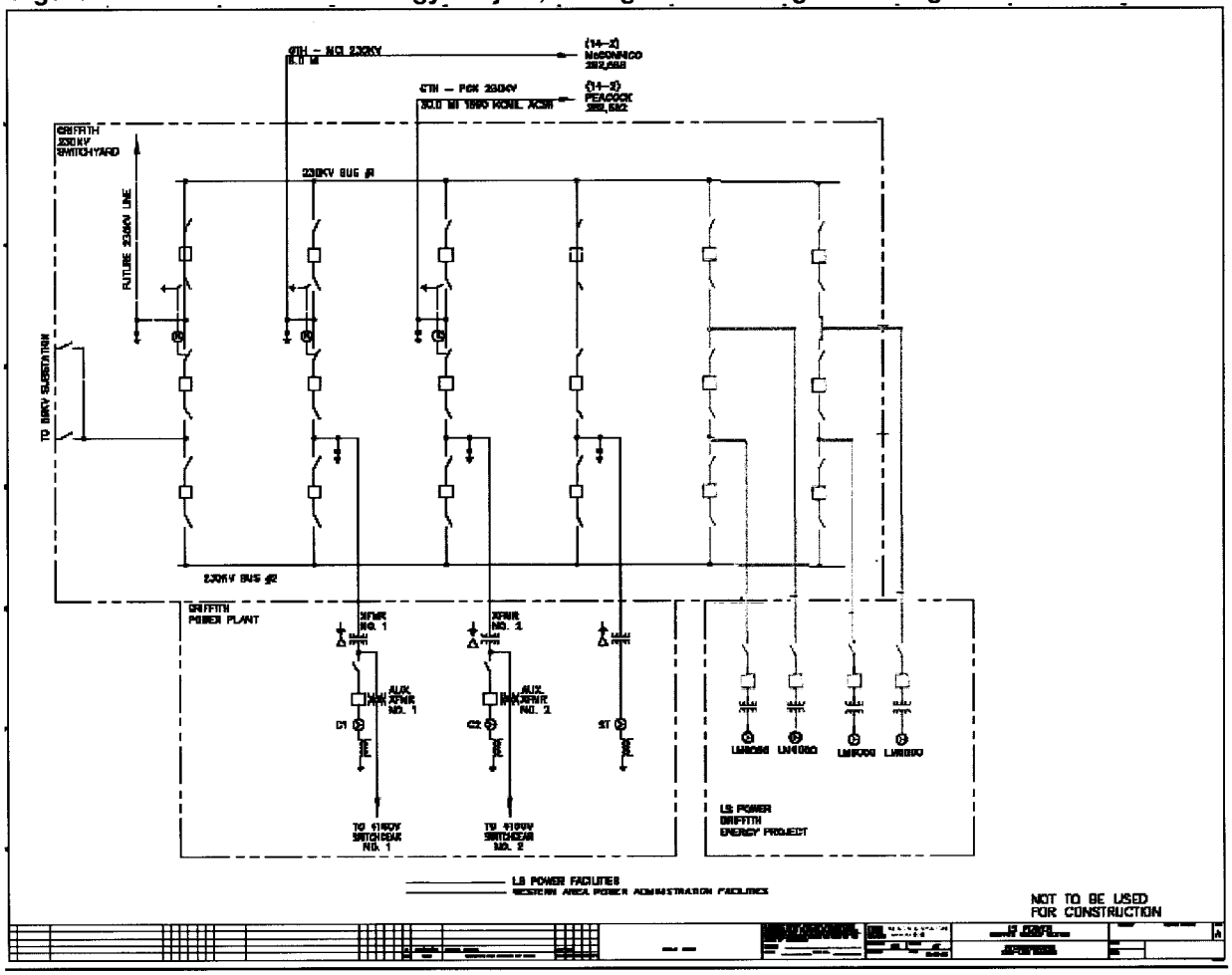

The following 2008 post-project power flow case descriptions identify generation dispatch modifications required for the post-project case scenarios:

Cases 5 & 7: 2008 Heavy Autumn: Min WAPA Gen – Dispatch to Area 18 (Nevada).

- Liberty phase-shift transformer models a south to north flow of 450 MW.
- With insertion of the Project, Merchant generation in Nevada was reduced to accommodate the Northern Arizona Energy Project.

Cases 6 & 8: 2008 Heavy Autumn: Min WAPA Gen – Dispatch to regional Load.

- Liberty phase-shift transformer models a south to north flow of 450 MW.
- Based on load projections, the UNS load will grow by 197 MW from the 2008 load levels. Therefore, load at White Hill, North Havasu and Hilltop were increased to reflect the 2014 season load level. Modeling both the load growth and Northern Arizona Energy Project off-set each other to balance load and resources.

Case 9 & 11: 2008 Heavy Autumn: Min WAPA Gen – Dispatch to Area 18 (Nevada).

- Liberty phase-shift transformer is by-passed.
- With insertion of the Project, Merchant generation in Nevada was reduced to accommodate the Northern Arizona Energy Project.

Case 10 & 12: 2008 Heavy Autumn: Min WAPA Gen – Dispatch to regional Load.

- Liberty phase-shift transformer models a south to north flow of 450 MW.
- Based on load projections, the UNS load will grow by 197 MW from the 2008 load levels. Therefore, load at White Hill, North Havasu and Hilltop were increased to reflect the 2014 season load level. Modeling both the load growth and Northern Arizona Energy Project off-set each other to balance load and resources.

A summary of post-project power flow case attributes are listed in **Table 2**.

Table 2. Post-Project Power Flow Case Attributes

	Liberty PST In-Service				Liberty PST By-Passed			
	Case 5 Min-Al	**Case 6 Min-LD**	**Case 7 Max-Al**	**Case 8 Max-LD**	**Case 9 Min-Al**	**Case 10 Min-LD**	**Case 11 Max-Al**	**Case 12 Max-LD**
Path 46 - West of the River	8,400	8,400	9,200	9,200	8,401	8,400	9,200	9,200
Path 49 - East of the River	9,300	9,300	9,300	9,300	9,300	9,300	9,301	9,300
Area 14 - AZ								
Load	12,267	12,354	12,273	12,360	12,267	12,464	12,273	12,470
Losses	462	461	469	467	460	458	460	457
Gen	23,845	23,873	24,734	24,758	23,954	23,986	24,851	24,874
Interchange	11,117	11,058	11,992	11,931	11,227	11,064	12,118	11,946
Zone 191 - WAPA-DSW								
Load	1,164	1,361	1,170	1,367	1,164	1,361	1,170	1,367
Losses	157	156	172	170	148	147	160	157
Gen	2,379	2,379	3,639	3,639	2,379	2,379	3,639	3,639
Interchange	724	638	1,964	1,879	733	537	1,976	1,781

2.3 Post-Transient Contingencies

The following contingencies were simulated for the post-transient analysis:

1. Loss of NAEP Units 1 and 2.
2. Loss of Griffith Unit 1.
3. Loss of Davis Unit 1.
4. Loss of South Point Unit 1.
5. Loss of Parker Unit 1.
6. Loss of Hoover Units 3 and 4.
7. Griffith-Peacock 230 kV single line contingency.
8. Griffith-McConnico 230 kV single line contingency.
9. Davis-McConnico 230 kV single line contingency.
10. Peacock-Hilltop 230 kV single line contingency.
11. Peacock-Round Valley-Prescott 230 kV single line contingency.
12. Davis-Mead 230 kV single line contingency.
13. Davis-McCullough 230 kV single line contingency.
14. Davis-Topock 230 kV single line contingency.
15. Parker-Black Mesa 230 kV single line contingency.
16. Parker-Liberty 230 kV single line contingency.
17. Palo Verde - Devers 500 kV single line contingency.
18. Palo Verde – Westwing No.1 and 2 500 kV single line contingencies.
19. North Gila – Imperial Valley 500 kV single line contingency.
20. Hassayampa - N.Gila 500 kV single line contingency.
21. Mead-Peacock 345 kV single line contingency.
22. Liberty-Peacock 345 kV single line contingency.
23. Mead - Perkins 500 kV single line contingency.
24. Lugo - Mohave 500 kV single line contingency.
25. Crystal - McCullough 500 kV single line contingency.
26. Mead-Harry Allen 500 kV single line contingency.
27. ElDorado - Lugo 500 kV single line contingency.
28. El Dorado - Moenkopi 500 kV single line contingency.
29. Navajo - Crystal 500 kV single line contingency.
30. McCullough-Victorville 500 kV double line contingency.

2.4 Transient Stability Power Flow Cases and Dynamic Data

Transient stability simulations were performed using the 2008 heavy autumn power flow cases.

2.4.1 Transient Stability Modeling

Since actual load composition data is not available, induction motors were represented with the motorw model and default data as recommended by WECC. Induction motors were assumed to make up 20% of the WECC system load. The EPCL creatmot5.p program was used to determine the motor representation in each dynamic data file.

The transient stability model for the Northern Arizona Energy Project was developed based on data received from SWPP. Details of the Project transient stability model are included in **Appendix D**.

2.5 Reliability Criteria

A system reliability evaluation consists primarily of determining if thermal overloads exist, that voltages are within criteria (not too high or low), and that the system is stable (the system should not oscillate excessively and generators should remain synchronized with one another). Additional criteria may include assurance that there is sufficient reactive power available. Evaluation of these criteria must be conducted for credible 'emergency' conditions that the system might sustain, such as loss of a single or

double circuit line, a transformer, or a combination of these facilities. The following reliability criteria were employed for this study:

2.5.1 Power Flow

Normal Conditions

1. Under normal conditions, bus voltages must be maintained between 0.95 per unit and 1.05 per unit.
2. All line and transformer loadings must be less than 98 percent of their continuous thermal ratings.

Emergency Conditions

1. Under contingency conditions, bus voltages must be maintained between 0.90 per unit and 1.10 per unit. In addition, voltage deviations at any bus for n-1 contingencies must be no more than 5% and voltage deviations for n-2 contingencies must be no more than 10%.
2. For a single contingency, no transmission element will be loaded above its emergency rating.
3. Established loading limits for other utilities will be monitored.
4. Bus voltage deviations from the base case voltage shall not exceed established planning limits.

2.5.2 Transient Stability

Performance of the transmission system is measured against the following planning criteria: the Western Electricity Coordinating Council ("WECC") Reliability Criteria, and the North American Electric Reliability Council ("NERC") Planning Standards.

Table 3 and **Figure 3** are excerpts from the WECC Reliability Criteria. The reliability and performance criteria were applied to the entire WECC transmission system.

Table 3. WECC Disturbance-Performance Table Of Allowable Effects On Other Systems

NERC and WECC Categories	Outage Frequency Associated with the Performance Category (outage/year)	Transient Voltage Dip Standard	Minimum Transient Frequency Standard	Post Transient Voltage Deviation Standard (See Note 2)
A	Not Applicable	Nothing in addition to NERC		
B	≥ 0.33	Not to exceed 25% at load buses or 30% at non-load buses. Not to exceed 20% for more than 20 cycles at load buses.	Not below 59.6Hz for 6 cycles or more at a load bus.	Not to exceed 5% at any bus.
C	0.033 – 0.33	Not to exceed 30% at any bus. Not to exceed 20% for more than 40 cycles at load buses.	Not below 59.0Hz for 6 cycles or more at a load bus.	Not to exceed 10% at any bus.
D	< 0.033	Nothing in addition to NERC		

Figure 3. NERC/WECC Voltage Performance Parameters

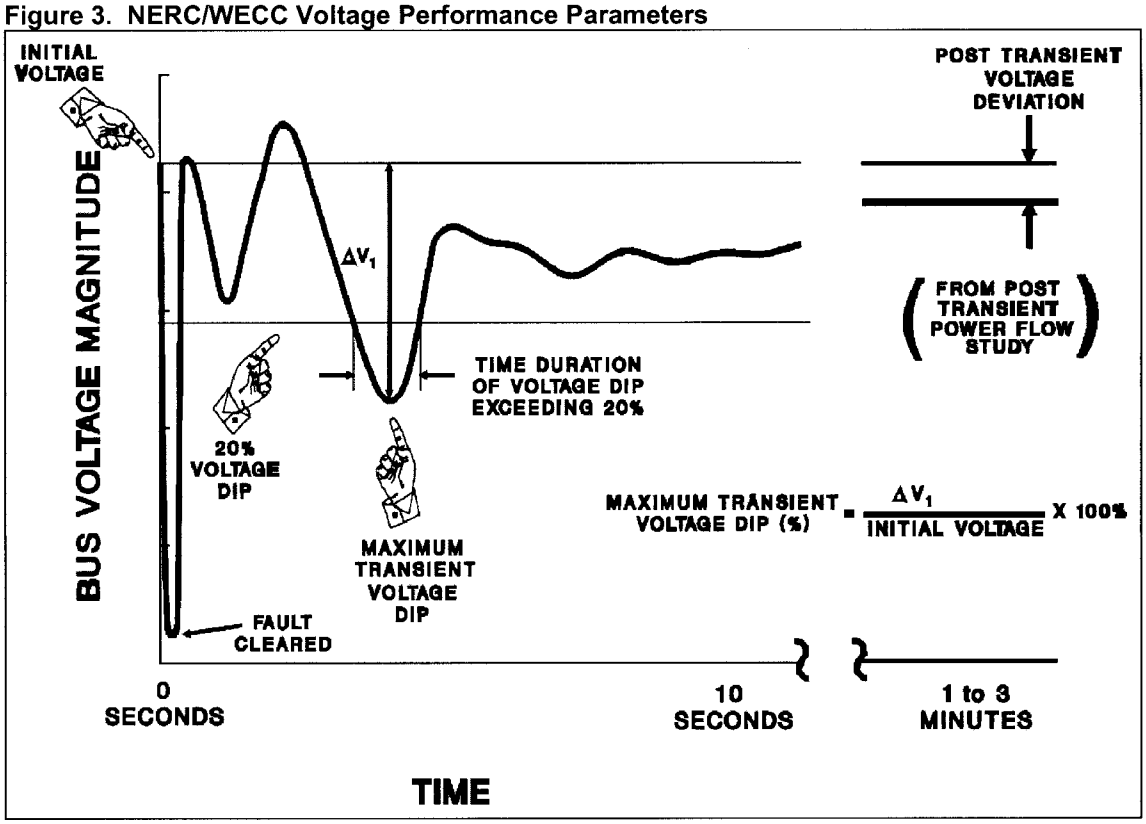

3 STUDY METHODOLOGY

This section of the report provides a summary of methods employed for determining the power flow and transient stability results.

3.1 Power Flow

Power flow analysis considers a snapshot in time where TCUL, SVDs and phase-shifters have had time to adjust. In addition, a swing bus balances the system during each contingency scenario.

Traditional power flow analysis was used to evaluate thermal (and voltage) performance of the system under N-1 (single contingency) conditions. Reported thermal overloads were limited to the condition where a modeled transmission component is loaded over 98% of its appropriate emergency MVA rating (as entered in the power flow database), and the incremental increase in component loading, between pre-project and post-project, exceeds 2%.

Transmission voltage violations for normal N-0 (no contingency) conditions were limited to the conditions where per unit voltages are less than 0.95 or greater than 1.05. Emergency (N-1, single contingency) voltage violations were reported when per unit voltages are less than 0.90 or greater than 1.10. In addition, voltage deviations between the pre- and post-contingency conditions were noted whenever deviations are greater than 5% and when voltage deviation increases by 1% or more between the pre- and post-project power flow cases.

All power flow analysis was conducted with version 16.0 of General Electric's PSLF/PSDS/SCSC software.

3.2 Post-Transient Analysis

Post-transient analysis considers the period of time after the power and voltage transient oscillations have damped out, but before system operators have had time to readjust intertie schedules. The time frame is approximately 1.5 to 3 minutes subsequent a disturbance. Post-transient analysis techniques will be employed to evaluate the thermal (and voltage) performance of the system for contingencies that rely on remedial action schemes ("RAS") - such as load or generator dropping.

All post-transient evaluations were conducted using version 16.0 of General Electric's PSLF/PSDS/SCSC software. A modified version of the WECC-distributed governor power flow EPCL tool will be used to model operations specific to post-transient analysis.

In order to run a post-transient simulation, unit blocking is achieved by testing the generator baseload flag as opposed to referencing the WECC-supplied block.dat file.

The following remote controlling generators and reactive devices will be set to float:

- Maple Valley-SVC 19.6-kV
- Keeler-SVC 19.6-kV
- Emery Hunter Unit 1 24.0-kV
- Emery Hunter Unit 2 24.0-kV
- Emery Hunter Unit 3 22.0-kV
- Huntington Unit 1 22.0-kV
- Huntington Unit 2 22.0-kV

The following switchable shunt devices were set to float:

- Gonder 230.0-kV
- Austin 230.0-kV

3.2.1 Thermal & Voltage

Reported thermal overloads will be limited to the condition where a modeled transmission component was loaded over 100% of its appropriate normal or emergency rating (as entered in the power flow database).

The voltage study criteria adheres to the Western Electricity Coordinating Council ("WECC") Reliability Criteria for Transmission System Planning.

The applicable WECC reliability planning criteria is listed below.

- Changes in bus voltages from pre- to post-contingency must be less than 5% and 10% for single and double contingencies, respectively.
- All equipment loadings must be below their normal ratings under normal conditions.
- All equipment loadings must be below their emergency ratings for single contingencies.
- All thermal overloads identified in post-transient analysis (new or existing) are under contingency conditions only.

3.3 Transient Stability

Transient stability analysis is a time-based simulation that assesses performance of the power system during (and shortly following) a contingency. Transient stability studies were performed to ensure system stability following a critical fault on the system. Prior to finalization of the power flow and dynamics data set, a flat-run and bump test was run to ensure true power system behavior is not masked by any remote dynamic modeling anomalies.

USE performed a transient stability analysis based on WECC Disturbance-Performance Criteria for selected system contingencies. Initial transient stability contingencies were performed out to 10 seconds. If system performance was not assessed with confidence, simulation times up to 20 seconds were

needed to evaluate system damping. All 345 kV and 500 kV contingencies modeled a 4 cycle clearing time and contingencies with a lower voltage had a 5 cycle clearing time modeled.

All transient stability simulations were conducted using version 16.0 of General Electric's PSLF/PSDS/SCSC software. A modified version of the WECC-distributed alldyns.p EPCL program, which is employed in bulk system regional 500 kV analysis was used to model operations specific to transient stability analysis.

The Worst Condition Analysis (WCA) tool, available in the PSDS software package, tracks and records the transient stability behavior of all output channels contained within the binary output file of a transient stability simulation. The monitoring of channel output was set to being two cycles after fault clearing to ensure that all stability behavior would be captured. System damping was assessed visually with the aid of stability plots.

Parameters Monitored to Evaluate System Stability Performance

Rotor Angle

Rotor angle plots provide a measure for determining how the proposed generation unit would swing with respect to other generation units in the area. This information is used to determine if a machine would remain in synchronism or go out-of-step following a disturbance.

Bus Voltage

Bus voltage plots, in conjunction with the relative rotor angle plots, provide a means of detecting out-of-step conditions. The bus voltage plots are useful in assessing the magnitude and duration of post disturbance voltage dips and peak-to-peak voltage oscillations. Bus voltage plots also give an indication of system damping and the level to which voltages are expected to recover in steady state conditions.

Bus Frequency

Bus frequency plots provide information on magnitude and duration of post fault frequency swings with the Project in service. These plots indicate the extent of possible over-frequency or under-frequency, which can occur because of an imbalance between generation and load within an area.

Other Parameters

- Generator Terminal Power
- Generator Terminal Voltage
- Generator Rotor Speed
- Generator Field Voltage
- Voltage Spread
- Frequency Spread

3.4 Short-Circuit Duty

Short-circuit duty analysis applies a 3-phase fault at the specified bus and then interrupting currents are measured at each breaker location.

Short-circuit duty evaluations were conducted using version 30.3.1 of Siemens/PTI software. A GE power flow base case was converted to PSS/E for this analysis.

Circuit breakers exposed to fault currents in excess of 100 percent of their interrupting capabilities will be replaced or upgraded, whichever is appropriate.

4 RESULTS & FINDINGS

This section of the report provides results obtained in utilizing the above assumptions and methodology. It illustrates all findings associated with the power flow, post-transient, transient stability and short-circuit analysis.

4.1 Power Flow Analysis

The power flow analysis studied two alternatives of displacing the Northern Arizona Energy Project generation: 1) Nevada generation was reduced to accommodate the Northern Arizona Energy Project generation and 2) NAEP generation serves the regional load growth. In addition, the Liberty phase-shift transformer ("PST") was modeled in two conditions: 1) in-service with a south-to-north flow of 450 MW and 2) by-passed.

The Northern Arizona Energy Project increases post-contingency power flow loading to a few elements, which are tabulated in **Tables 4** and **5**. Only the highest loaded "affected elements" are tabulated. In addition, case names in column "**case**" can be referred to by the following:

1. 1-AI refers to a minimum generation dispatch in the WAPA-DSW system. In addition, the Northern Arizona Energy Project generation is displaced by Nevada Generation.

2. 2-LD refers to a minimum generation dispatch in the WAPA-DSW system. In addition, the Northern Arizona Energy Project generation is displaced by regional load growth.

3. 3-AI-max refers to a maximum generation dispatch in the WAPA-DSW system. In addition, the Northern Arizona Energy Project generation is displaced by Nevada Generation.

4. 4-LD-max refers to a maximum generation dispatch in the WAPA-DSW system. In addition, the Northern Arizona Energy Project generation is displaced by regional load growth.

Power flow plots for normal and emergency system conditions for each scenario are included in **Appendix B**. A list of contingencies simulated for each scenario are included in **Appendix C**.

4.1.1 Northern Arizona Energy Project Displacing Nevada Generation.

There were NERC/WECC Category "B" contingency affected elements identified when the Liberty PST was in-service at 450 MW. Loss of the North Gila – Imperial Valley 500 kV line affects the Blythe-Niland 161kV line; however it only slightly increases power flow to this element. Furthermore, the Blythe SPS will reduce Buck Blvd generation to mitigate the thermal overload.

Loss of the Peacock-Mead 345 kV line or the Mead 345/230 kV transformer increases flow to the Davis-McConnico 230 kV line by 21%. The pre-project loading was at its thermal limit, therefore, the NAEP generation further increases flow to this element.

The remaining thermal affected elements are a result of N-1-1 contingencies. The most severe is for loss of the Peacock 345/230 kV transformer, then loss of the Davis-McConnico 230 kV line or vice-versa with maximum NAEP and Griffith generation on-line. Power flow to the Round Valley – Peacock 230 kV, Round Valley – Prescott 230 kV and Prescott-Yavapai 230 kV lines significantly increased as a result of the Northern Arizona Energy Project. In addition, a synchronous condenser modeled at the McConnico 230 kV bus was needed for a solution when the Liberty PST was by-passed. This identifies that all Griffith and NAEP generation can not be on-line when the Peacock 345/230 kV transformer and Davis-McConnico 230 kV line are open. Mitigation for these conditions will be further defined in the Power Flow Mitigation section.

Table 4. 2008 Heavy Autumn Emergency Percent Loading – Displacing Nevada Generation.

				Liberty PST In-Service at 450MW (s2n)		Liberty PST By-Passed	
Case	Contingency	Affected Element	Normal/ Emergency Rating (Amps)	Pre-Project	Post-Project	Pre-Project	Post-Project
3-Al-max	N.Gila - Imperial Valley 500 kV	Blythe - Niland 161 kV	592/592	106.8	107.9	NA	NA
1-Al	Peacock - Mead 345 kV	Davis - McConnico 230 kV	1130/1243	99.1	120.3	NA	NA
1-Al	Mead 345/230 kV Transformer	Davis - McConnico 230 kV	1130/1243	99.0	120.2	NA	NA
3-Al-max	Hilltop - McConnico 230 kV Griffith - Peacock 230 kV	Davis - McConnico 230 kV	1130/1243	102.7	139.5	102.7	137.4
3-Al-max	Davis - McConnico 230 kV Griffith - Peacock 230 kV	Hilltop - McConnico 230 kV	1130/1243	103.8	141.6	103.0	137.9
3-Al-max	Davis - McConnico 230 kV Griffith - Peacock 230 kV	Hilltop - Peacock 230 kV	1130/1243	83.2	120.6	82.7	117.5
1-Al/3-Al-max	Peacock 345/230 kV Trans Davis - McConnico 230 kV	Prescott - Yavapai 230 kV	670/811	65.4	109.1	70.8	134.6
1-Al/3-Al-max	Peacock 345/230 kV Trans Davis - McConnico 230 kV	Round Valley - Peacock 230 kV	816/897	114.6	170.9	118.8	**196.4***
1-Al/3-Al-max	Peacock 345/230 kV Trans Davis - McConnico 230 kV	Round Valley - Prescott 230 kV	816/897	111.3	167.6	115.5	**192.7***

NA – indicates there were no thermal overloads triggered with the Liberty PST by-passed.
*Required a synchronous condenser for a solution. Results in a voltage collapse in the local system.

In addition, voltage violations were identified for all N-1-1 contingencies; however, they will be mitigated with the power flow mitigation.

4.1.2 Northern Arizona Energy Project Generation Serving Regional Load Growth.

There was only one NERC/WECC Category "B" contingency affected element triggered when the Liberty PST was in-service at 450 MW. Loss of the Peacock-WhiteHill 345 kV line impacts the Davis-McConnico 230 kV line by 16.7%. The pre-project loading was at its thermal limit, therefore, the NAEP generation further increases flow to this element. Also, loss of the WhiteHill-Mead 345 kV line or Mead 345/230 kV transformer increases power flow to the Davis-McConnico 230 kV line by 9.3%. The White Hills bus is proposed to support UNS load in 2009. This bus intercepts the Peacock-Mead 345 kV line.

The remaining thermal affected elements are a result of N-1-1 contingencies. Similar to the NAEP being displaced by Nevada generation, the most severe is for loss of the Peacock 345/230 kV transformer, then loss of the Davis-McConnico 230 kV line or vice-versa with maximum NAEP and Griffith generation on-line. Power flow to the Round Valley – Peacock 230 kV, Round Valley – Prescott 230 kV and Prescott-Yavapai 230 kV lines significantly increased as a result of the NAEP. This identifies that all Griffith and NAEP generation can not be on-line when the Peacock 345/230 kV transformer and Davis-McConnico 230 kV line are open. Mitigation for these conditions will be further defined in the Power Flow Mitigation section.

Table 5. 2008 Heavy Autumn Emergency Percent Loading – Serving Regional Load Growth.

				Liberty PST In-Service at 450MW (s2n)		Liberty PST By-Passed	
Case	Contingency	Affected Element	Normal/ Emergency Rating (Amps)	Pre-Project	Post-Project	Pre-Project	Post-Project
2-LD	Peacock - WhiteHill 345 kV	Davis - McConnico 230 kV	1130/1243	99.3	116.0	NA	NA
2-LD	WhiteHill - Mead 345 kV	Davis - McConnico 230 kV	1130/1243	99.1	108.4	NA	NA
2-LD	Mead 345/230 kV Transformer	Davis - McConnico 230 kV	1130/1243	99.0	108.3	NA	NA
4-LD-max	Hilltop - McConnico 230 kV Griffith - Peacock 230 kV	Davis - McConnico 230 kV	1130/1243	102.7	139.4	137.4	34.6
4-LD-max	Davis - McConnico 230 kV Griffith - Peacock 230 kV	Hilltop - McConnico 230 kV	1130/1243	103.8	141.1	137.7	34.7
2-LD/4-LD-max	Peacock - White Hill 345 kV Griffith - McConnico 230 kV	Hilltop - Peacock 230 kV	1130/1243	100.3	119.2	82.7	110.3
2-LD	Peacock 345/230 kV Tran Davis - McConnico 230 kV	Prescott - Yavapai 230 kV	670/811	65.4	114.3	66.1	115.6
2-LD	Peacock 345/230 kV Tran Davis - McConnico 230 kV	Round Valley - Peacock 230 kV	816/897	114.6	173.8	114.6	174.6
2-LD	Peacock 345/230 kV Tran Davis - McConnico 230 kV	Round Valley - Prescott 230 kV	816/897	111.3	170.1	111.3	170.9

NA – indicates there were no thermal overloads triggered with the Liberty PST by-passed.

In addition, voltage violations were identified for all N-1-1 contingencies; however, they will be mitigated with the power flow mitigation.

4.1.3 Power Flow Mitigation.

Flow limits were developed to estimate post-contingency element flows for the identified thermally overloaded elements caused by the Project. Flow limits will be used to determine the amount of generation reduction in order to mitigate post-contingency thermal overloads for loss of critical element(s). They will not be operated in a preventative manner, which would curtail Northern Arizona Energy Project generation prior to the critical contingency.

Each flow limit has two calculated components from the system: 1) load distribution factor and 2) generation shift factors. The load distribution factor ("LODF") is determined based on the impedance of the system. So, when an element is out-of-service, the LODF will be different. The LODF determines an approximate percent line flow that will be increased on the line of interest. For example, the Peacock-Mead 345 kV line has a pre-contingency line flow of 859 amps in the minimum WAPA-DSW generation case with Project generation being displaced by Nevada generation. For loss of the Peacock-Mead 345 kV line, 52.8% of its pre-contingency line flow moves to the Davis-McConnico 230 kV line. Therefore, the flow limit is calculated by the following:

Flow Limit = LODF*(Peacock-Mead 345 kV line flow) + Davis-McConnico 230 kV line flow
= 0.528*(859 amps) + 1,047 (Amps)
= 1,501 (Amps)

The Davis-McConnico 230 kV line has a continuous rating of 1,130 amps; hence, mitigative measures must be completed to reduce flow during the loss of the Peacock – Mead 345 kV line. Since the Project increased flow to these elements, the Project generation can be reduced. A generation shift factor can be developed to determine generation curtailment requirements.

The generation shift factor ("GSF") is a ratio that calculates an approximate reduction/increase to an element prior to the contingency. The GSF will assist in determining the amount of generation reduction that is required to reduce the flow limit to its continuous rating. Since the flow limit value is in amps, a

conversion ("assuming a balanced three-phase circuit") to real power ("MW") is required for determining generation curtailments.

For example, a GSF of 0.5057 was calculated after the Peacock-Mead 345 kV contingency. The Northern Arizona Energy Project generation curtailment based on the above contingency overload can be calculated by the following:

Generation Curtailments = (Calculated flow limit – Continuous rating) * Conversion * GSF
= (1,501 – 1,130) * (√3 * 230kV/1000) * 0.5057
= 75 MW

Therefore, for this particular example a 75 MW reduction of NAEP generation will mitigate post-contingency power flow overloads for loss of the Peacock – Mead 345 kV line.

Since the location of generation displacement outside the WAPA-DSW system is unknown, GSF's were calculated based on generation displacement at four locations: 1) Alameta, 2) Gila, 3) Silver Hawk and 4) Navajo. The highest GSF was selected to yield the most conservative results, which results in the largest generation reduction requirement; however, the GSF's were relatively close to one another.

Note, a linear analysis was used to calculate the load distribution and generation shift factors. Therefore, they do not take into account losses. This results in the load distribution factors to be smaller than a regular power flow that accounts for losses, which, may result in a lower generation reduction amount. Therefore, an additional margin should be applied to the load distribution factor.

A list of LODF and GSF factors calculated for all contingencies that were impacted by the Northern Arizona Energy Project are tabulated in **Appendix F**.

The developed power flow mitigation were tested with both post-transient and transient stability results to ensure system reliability is maintained.

The Northern Arizona Energy Project will be subject to generation curtailments based on flow limits during N-1 conditions for the following two contingencies:

1. Mead 345/230 kV transformer,
2. Peacock – Mead 345 kV line.

In addition, the Project is subject to generation curtailments for any of the identified N-1-1 conditions.

4.2 Post-Transient Analysis

Two post-project contingencies yielded voltage deviations greater than the WECC Performance standard of 5% for N-1 contingencies. However, the post-transient voltage deviations were corrected by reducing NAEP generation during the post-contingency case as prescribed by the flow limit.

Only the largest voltage deviation is recorded in the following tables. Tabulations of all post-transient voltage deviation results are included in **Appendix A**.

With use of flow limits, the post-transient voltage deviations from the Northern Arizona Energy Project does not have a negative impact.

4.2.1 Northern Arizona Energy Project Displacing Nevada Generation.

Loss of the Peacock 345/230 kV transformer and Davis-McConnico 230 kV line results in no numerical solution. This violation was identified in the power flow section of the report. All Griffith and NAEP generation can not be on-line when the Peacock 345/230 kV transformer and Davis-McConnico 230 kV line are open. Therefore, reducing the NAEP generation to zero and reducing the Griffith generation by 62 MW as prescribed by the flow limit, results in a post-transient voltage deviation of 6%, which is less than the 10% requirement.

Table 6. 2008 Heavy Autumn Post-Transient Voltage Deviations – Displacing Nevada Generation.

			Voltage Deviation		
Case	Contingency	Affected Bus	Pre-Project	Liberty PST In-Service Post-Project	Liberty PST By-Passed Post-Project
1-AI	Hassayampa-N.Gila 500 kV	KOFA 161.0	5.6	5.8	5.7
3-AI-max	Hassayampa-N.Gila 500 kV	KOFA 161.0	8.2	8.4	8.4
1-AI	Peacock 345/230 kV Tran Davis-McConnico 230 kV	ROUNDVLY 230.0	8.0	Diverged	Diverged
3-AI-max	Peacock 345/230 kV Tran Davis-McConnico 230 kV	ROUNDVLY 230.0	8.6	Diverged	Diverged

4.2.2 Northern Arizona Energy Project Generation Serving Regional Load Growth.

Loss of the Peacock 345/230 kV transformer and Davis-McConnico 230 kV line results in no numerical solution for the maximum generation case; however, the minimum generation case yielded a solution. It can be seen that the post-transient voltage deviation increased significantly as a result of the severely thermally overloaded transmission lines. All Griffith and NAEP generation can not be on-line when the Peacock 345/230 kV transformer and Davis-McConnico 230 kV line are open. Therefore, reducing the NAEP generation to zero and reducing the Griffith generation by 62 MW as prescribed by the flow limit, results in a post-transient voltage deviation that was observed to be 5.8%, which is less than the 10% requirement.

Table 7. 2008 Heavy Autumn Post-Transient Voltage Deviations – Serving Regional Load Growth.

			Voltage Deviation		
Case	Contingency	Affected Bus	Pre-Project	Liberty PST In-Service Post-Project	Liberty PST By-Passed Post-Project
2-LD	Hassayampa-N.Gila 500 kV	KOFA 161	5.6	5.7	NA
2-LD	Peacock 345/230 kV Tran Davis-McConnico 230 kV	ROUNDVLY 230.0	8.0	18.1	18.1
4-LD-max	Peacock 345/230 kV Tran Davis-McConnico 230 kV	ROUNDVLY 230.0	8.6	14.4	Diverged

4.3 Transient Stability Analysis

Transient stability analysis was completed for all post-project conditions, which include the Project generation being displaced by Nevada generation and the Project generation serving regional load. In addition, the Liberty PST was modeled in-service at 450 MW (south-to-north) and by-passed.

All 345 kV and 500 kV contingencies modeled a 4 cycle clearing time and contingencies with a lower voltage had a 5 cycle clearing time modeled. All line faults were simulated as three-phase faults, with zero fault impedance. Loss of any element was assumed to occur when the fault is cleared, indicating a circuit breaker operation.

All N-1 contingencies in the WAPA-DSW system showed sufficient damping with no WECC Performance Criteria violations. However, there were WECC Performance criteria violations for two N-1-1 contingencies.

Power flow results identified that with the Griffith-Peacock 230 kV line out-of-service and loss of the Davis-McConnico 230 kV line, the Hilltop-McConnico 230 kV and Hilltop-Peacock 230 kV lines will thermally overload with maximum NAEP and Griffith generation on-line. Transient stability results also identified that maximum NAEP and Griffith generation will result in the WECC Performance criteria standards to be violated. The Hilltop 230 kV bus would experience a 31.1% voltage dip and the Griffith 230 kV bus would experience a frequency dip of 59.5 Hz.

Power flow results identified that a flow limit will be required to ensure that the affected elements are not thermally overloaded under these conditions. Transient stability analysis was performed with the readjusted post-project case (i.e., flow limit requirements, which reduced the aggregate NAEP and Griffith generation). Results identified that there were no WECC Performance criteria violations with the flow limit requirements in place.

Power flow results also identified that with the Peacock 345/230 kV Transformer out-of-service and loss of the Davis-McConnico 230 kV line, the Round Valley-Peacock 230 kV, Round Valley-Prescott 230 kV and Prescott-Yavapai 230 kV lines will thermally overload with maximum NAEP and Griffith generation on-line. Transient stability results identified that the system had sustained oscillations that do not diminish with Griffith and NAEP generation greater than 520 MW, which denotes system instability. Therefore, the sum of Griffith and NAEP generation with the Peacock 345/230 kV transformer OR the Davis-Mc Connico 230 kV line open must remain at or below 520MW to prevent system instability.

Transient stability plots for select post-project simulations are included in **Appendix E**.

4.4 Short-Circuit Duty Analysis

The post-project base case was converted to PSS/E version 30.3.1, in order to complete the short-circuit analysis. In addition, only 3-phase fault analysis was completed since the negative sequence data was not available.

Table 8. Summary of Short-Circuit Duties, 3-Phase-to-Ground.

			Pre-Project		Post-Project		
Fault Applied Substation	**Substation TO**	**Interrupting Rating (kA)**	**X/R**	**Fault Current (kA)**	**X/R**	**Fault Current (kA)**	**Delta (kA)**
McConnico 230 kV	Davis 230 kV	40	8.5	4.01	9.2	4.03	0.0
McConnico 230 kV	Hilltop 230 kV	40	8.5	2.48	9.2	2.56	0.1
McConnico 230 kV	Griffith 230 kV	40	8.5	5.95	9.2	7.09	1.1
McConnico 230 kV Total Fault Duty				12.44		13.68	1.2
Peacock 230 kV	Round Valley 230 kV	40	9.7	1.41	10.3	1.42	0.0
Peacock 230 kV	Hilltop 230 kV	40	9.7	2.65	10.3	2.90	0.3
Peacock 230 kV	Griffith 230 kV	40	9.7	3.15	10.3	3.55	0.4
Peacock 230 kV	Peacock 345 kV	40	9.7	4.67	10.3	4.64	0.0
Peacock 230 kV Total Fault Duty				11.88		12.51	0.6
Griffith 230 kV	Griffith 16 kV	40	10.0	1.92	10.4	1.92	0.0
Griffith 230 kV	Griffith 16 kV	40	10.0	1.92	10.4	1.92	0.0
Griffith 230 kV	Griffith 16 kV	40	10.0	2.07	10.4	2.07	0.0
Griffith 230 kV	McConnico 230 kV	40	10.0	4.61	10.4	4.62	0.0
Griffith 230 kV	Peacock 230 kV	40	10.0	2.68	10.4	2.67	0.0
Griffith 230 kV	NAEP_1	-	-	-	11.5	1.26	-
Griffith 230 kV	NAEP_2	-	-	-	11.5	0.82	-
Griffith Total Fault Duty				13.21		15.28	2.1

Results identified that the Northern Arizona Energy Project did not trigger any circuit breaker violations.

5 COST AND SCHEDULE ESTIMATE

Western and SWPP attended a scoping meeting on October 23, 2006 where SWPP introduced two prop osed, 230kV alternative interconnections to be considered (See Section 2.2) for the SIS. Subsequent to the scoping meeting, SWPP confirmed that alternative #1 would be the assumed electrical configuration to study. It shall be noted that both alternative configurations #1 and #2 are electrically identical with respect to what was studied in this SIS. Therefore, if SWPP should change the configuration to

alternative #2 in the future, no additional load flow analysis, transient stability analysis, post transient stability analysis, or short circuit analysis will have to be performed. In addition, the Northern Arizona Energy Project will not be re-queued. However, additional costs will be incurred by SWPP should the configuration change during or after the Facility Study.

A general and preliminary cost estimate for the two proposed interconnection alternatives are shown below and the corresponding schedules are provided in **Figures 4** and **5**. The cost estimates include substation design, electrical equipment procurement, construction specification development, contracting, and construction.

Alternative #1 3-breaker (breaker and a half) interconnection: $4,200,000
Alternative #2 6-breaker (breaker and a half) interconnection: $7,200,000

A more detailed cost estimate will be prepared as part of the Facilities Study should SWPP decide to continue with the interconnection process. The Facility Study will also provide further details of the environmental process and construction schedule.

Figure 4. NAEP Project Interconnection - SIS Schedule - 3 Breaker Option.

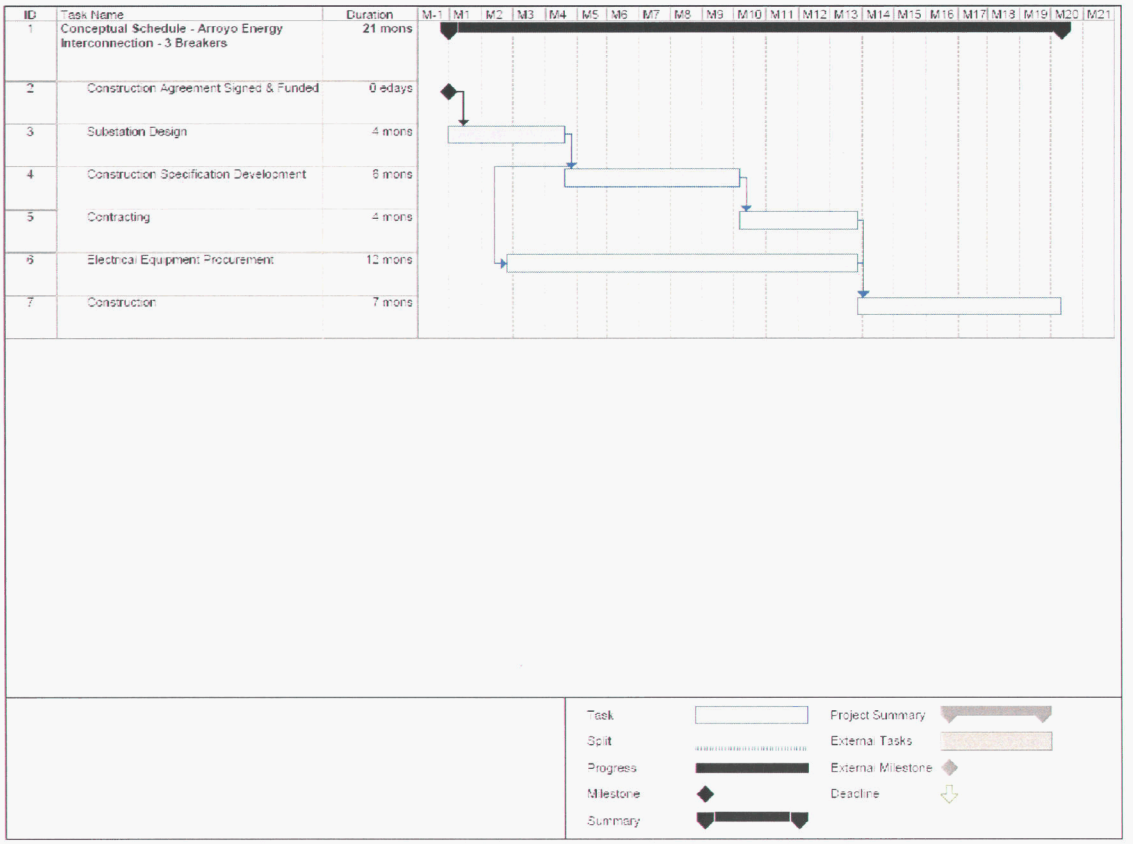

Figure 5. NAEP Project Interconnection - SIS Schedule - 6 Breaker Option.

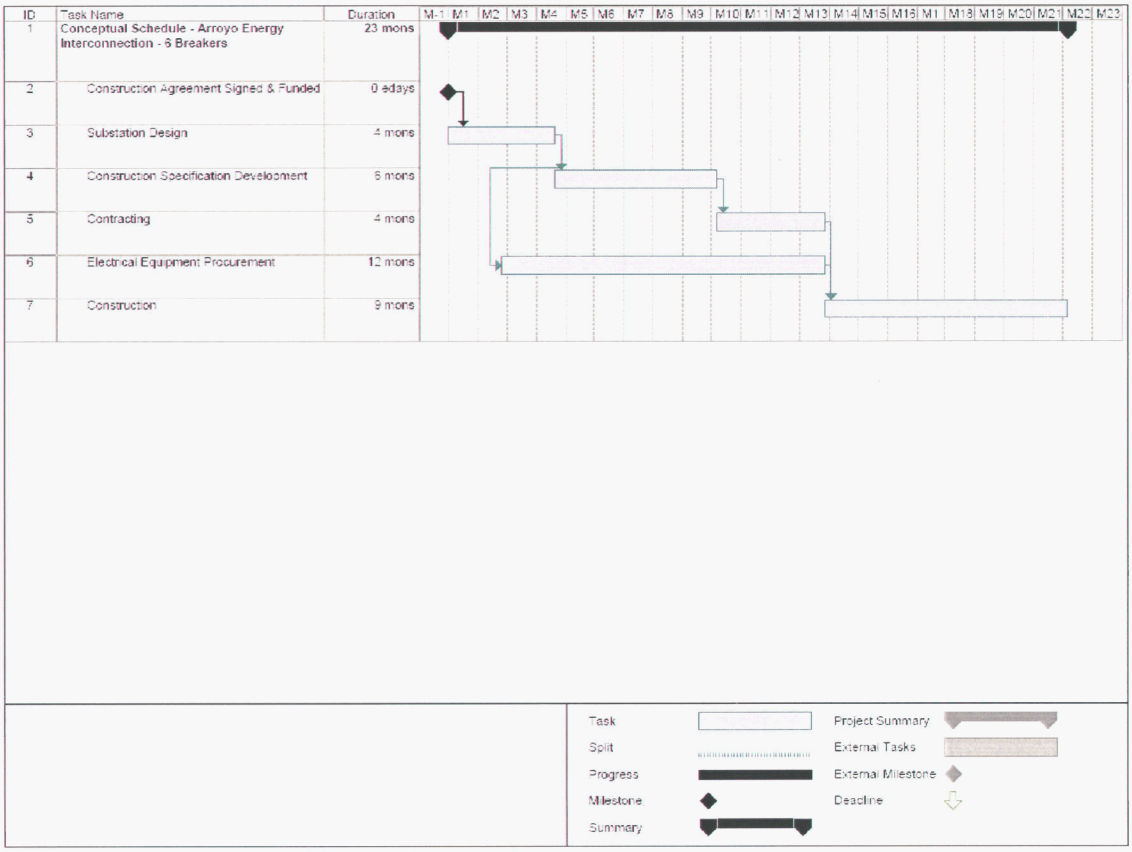

Appendix A

POWER FLOW RESULTS

The complete list of power flow results are tabulated in the following tables. Tables A-1 and A-2 model the Liberty phase-shift transformer in-service with 450 MW flowing in the south-to-north direction. Tables A-3 and A-4 have the Liberty phase-shift transformer by-passed. A description of each case is listed below.

Case	Description
1-AI-B	Indicates Minimum Area Generation, Adjusted Area Interchange to accommodate NAEP Generation - catB contingency
1-AI-C	Indicates Minimum Area Generation, Adjusted Area Interchange to accommodate NAEP Generation - catC contingency
2-LD-B	Indicates Minimum Area Generation, post-Project Load increased to match NAEP Generation - catB contingency
2-LD-C	Indicates Minimum Area Generation, post-Project Load increased to match NAEP Generation - catC contingency
3-AI-max-B	Indicates Maximum Area Generation, Adjusted Area Interchange to accommodate NAEP Generation - catB contingency
3-AI-max-C	Indicates Maximum Area Generation, Adjusted Area Interchange to accommodate NAEP Generation - catC contingency
4-LD-max-B	Indicates Maximum Area Generation, post-Project Load increased to match NAEP Generation - catB contingency
4-LD-max-C	Indicates Maximum Area Generation, post-Project Load increased to match NAEP Generation - catC contingency

Table A-1. 2008 Heavy Summer – Liberty PST In-Service – NAEP Generation displaces generation in Nevada.

						Percent of Emergency Rating		
Case	CONTINGENCY	AFFECTED ELEMENT	Norm/Emer Rating (Amps)	Pre-Project Loading (Amps)	Post-Project Loading (Amps)	Pre-Project	Post-Project	Project Impact
1-AI-B	Peacock - Mead 345 kV	Davis - McConnico 230 kV	1130/1243	1232	1495	99.1	120.3	21.2
1-AI-B	Mead 345/230 kV Transformer	Davis - McConnico 230 kV	1130/1243	1230	1494	99.0	120.2	21.2
3-AI-max-B	N.Gila - Imperial Valley 500 kV	Blythe - Niland 161 kV	592/592	632	638	106.8	107.9	1.1
3-AI-max-B	Hassayampa - N.Gila 500 kV	Blythe - Niland 161 kV	592/592	595	601	100.5	101.6	1.1
3-AI-max-B	Peacock - Mead 345 kV	Davis - McConnico 230 kV	1130/1243	1122	1385	90.3	111.5	21.2
3-AI-max-B	Mead 345/230 kV Transformer	Davis - McConnico 230 kV	1130/1243	1119	1382	90.1	111.2	21.1
1-AI-C	Hilltop - McConnico 230 kV Griffith - Peacock 230 kV	Davis - McConnico 230 kV	1130/1243	1244	1695	100.1	136.4	36.3
1-AI-C	Peacock - White Hill 345 kV Griffith - Peacock 230 kV	Davis - McConnico 230 kV	1130/1243	1248	1540	100.4	123.9	23.5
1-AI-C	White Hill - Mead 345 kV Griffith - Peacock 230 kV	Davis - McConnico 230 kV	1130/1243	1247	1538	100.3	123.8	23.5
1-AI-C	Griffith - Peacock 230 kV Mead 345/230 kV Transformer	Davis - McConnico 230 kV	1130/1243	1246	1537	100.3	123.7	23.4
1-AI-C	Peacock - White Hill 345 kV Topock - ZORB 230 kV	Davis - McConnico 230 kV	1130/1243	1243	1503	100.0	121.0	21.0
1-AI-C	White Hill - Mead 345 kV Topock - ZORB 230 kV	Davis - McConnico 230 kV	1130/1243	1241	1501	99.9	120.8	20.9
1-AI-C	Topock - ZORB 230 kV Mead 345/230 kV Transformer	Davis - McConnico 230 kV	1130/1243	1240	1500	99.8	120.7	21.0
1-AI-C	Peacock - White Hill 345 kV Mead - White Hill 345 kV	Davis - McConnico 230 kV	1130/1243	1234	1497	99.3	120.5	21.2
1-AI-C	Peacock - White Hill 345 kV Mead 345/230 kV Transformer	Davis - McConnico 230 kV	1130/1243	1234	1497	99.3	120.5	21.2
1-AI-C	Peacock - White Hill 345 kV Mead S - Mead N No.1 230 kV	Davis - McConnico 230 kV	1130/1243	1234	1497	99.3	120.5	21.2
1-AI-C	Peacock - White Hill 345 kV Mead S - Mead N No.2 230 kV	Davis - McConnico 230 kV	1130/1243	1234	1497	99.3	120.5	21.2
1-AI-C	Peacock - White Hill 345 kV S.Point - Topock No.1 230 kV	Davis - McConnico 230 kV	1130/1243	1234	1497	99.3	120.5	21.2
1-AI-C	Peacock - White Hill 345 kV S.Point - Topock No.2 230 kV	Davis - McConnico 230 kV	1130/1243	1234	1497	99.3	120.5	21.2
1-AI-C	Peacock - White Hill 345 kV Liberty - Westwing 230 kV	Davis - McConnico 230 kV	1130/1243	1232	1496	99.2	120.4	21.2
1-AI-C	Peacock - White Hill 345 kV Hilltop - McConnico 230 kV	Davis - McConnico 230 kV	1130/1243	1222	1496	98.4	120.4	22.0

Table A-1. (continued) 2008 Heavy Summer – Liberty PST In-Service – NAEP Generation displaces generation in Nevada.

						Percent of Emergency Rating		
Case	CONTINGENCY	AFFECTED ELEMENT	Norm/Emer Rating (Amps)	Pre-Project Loading (Amps)	Post-Project Loading (Amps)	Pre-Project	Post-Project	Project Impact
1-AI-C	White Hill - Mead 345 kV Mead 345/230 kV Transformer	Davis - McConnico 230 kV	1130/1243	1232	1495	99.1	120.3	21.2
1-AI-C	White Hill - Mead 345 kV Mead S - Mead N No.1 230 kV	Davis - McConnico 230 kV	1130/1243	1232	1495	99.1	120.3	21.2
1-AI-C	White Hill - Mead 345 kV Mead S - Mead N No.2 230 kV	Davis - McConnico 230 kV	1130/1243	1232	1495	99.1	120.3	21.2
1-AI-C	White Hill - Mead 345 kV S.Point - Topock No.1 230 kV	Davis - McConnico 230 kV	1130/1243	1232	1495	99.1	120.3	21.2
1-AI-C	White Hill - Mead 345 kV S.Point - Topock No.2 230 kV	Davis - McConnico 230 kV	1130/1243	1232	1495	99.1	120.3	21.2
1-AI-C	White Hill - Mead 345 kV Liberty - Westwing 230 kV	Davis - McConnico 230 kV	1130/1243	1230	1494	99.0	120.2	21.2
1-AI-C	White Hill - Mead 345 kV Hilltop - McConnico 230 kV	Davis - McConnico 230 kV	1130/1243	1221	1494	98.2	120.2	22.0
1-AI-C	Mead S - Mead N No.1 230 kV Mead 345/230 kV Transformer	Davis - McConnico 230 kV	1130/1243	1230	1494	99.0	120.2	21.2
1-AI-C	Mead S - Mead N No.2 230 kV Mead 345/230 kV Transformer	Davis - McConnico 230 kV	1130/1243	1230	1494	99.0	120.2	21.2
1-AI-C	South Pt - Topock No.1 230 kV Mead 345/230 kV Transformer	Davis - McConnico 230 kV	1130/1243	1231	1494	99.1	120.2	21.2
1-AI-C	South Pt - Topock No.2 230 kV Mead 345/230 kV Transformer	Davis - McConnico 230 kV	1130/1243	1231	1494	99.1	120.2	21.2
1-AI-C	Peacock - White Hill 345 kV Davis - Topock No.2 230 kV	Davis - McConnico 230 kV	1130/1243	1234	1494	99.3	120.2	20.9
1-AI-C	Liberty - Westwing 230 kV Mead 345/230 kV Transformer	Davis - McConnico 230 kV	1130/1243	1229	1493	98.9	120.1	21.2
1-AI-C	Hilltop - McConnico 230 kV Mead 345/230 kV Transformer	Davis - McConnico 230 kV	1130/1243	1219	1492	98.1	120.1	22.0
1-AI-C	White Hill - Mead 345 kV Davis - Topock No.2 230 kV	Davis - McConnico 230 kV	1130/1243	1232	1492	99.1	120.0	20.9

Table A-1. (continued) 2008 Heavy Summer – Liberty PST In-Service – NAEP Generation displaces generation in Nevada.

						Percent of Emergency Rating		
Case	CONTINGENCY	AFFECTED ELEMENT	Norm/Emer Rating (Amps)	Pre-Project Loading (Amps)	Post-Project Loading (Amps)	Pre-Project	Post-Project	Project Impact
1-AI-C	Davis - Topock No.2 230 kV Mead 345/230 kV Transformer	Davis - McConnico 230 kV	1130/1243	1231	1490	99.0	119.9	20.9
1-AI-C	Peacock - White Hill 345 kV Davis - ZORB 230 kV	Davis - McConnico 230 kV	1130/1243	1216	1476	97.9	118.8	20.9
1-AI-C	White Hill - Mead 345 kV Davis - ZORB 230 kV	Davis - McConnico 230 kV	1130/1243	1214	1474	97.7	118.6	20.9
1-AI-C	Davis - ZORB 230 kV Mead 345/230 kV Transformer	Davis - McConnico 230 kV	1130/1243	1212	1473	97.6	118.5	21.0
1-AI-C	Peacock - White Hill 345 kV Hilltop - Peacock 230 kV	Davis - McConnico 230 kV	1130/1243	1166	1439	93.8	115.8	22.0
1-AI-C	White Hill - Mead 345 kV Hilltop - Peacock 230 kV	Davis - McConnico 230 kV	1130/1243	1164	1437	93.7	115.6	21.9
1-AI-C	Peacock - White Hill 345 kV N.Havasu - Topock 230 kV	Davis - McConnico 230 kV	1130/1243	1179	1437	94.9	115.6	20.8
1-AI-C	Hilltop - Peacock 230 kV Mead 345/230 kV Transformer	Davis - McConnico 230 kV	1130/1243	1163	1436	93.6	115.5	22.0
1-AI-C	Griffith - Peacock 230 kV Hilltop - Peacock 230 kV	Davis - McConnico 230 kV	1130/1243	989	1435	80.0	115.5	35.5
1-AI-C	White Hill - Mead 345 kV N.Havasu - Topock 230 kV	Davis - McConnico 230 kV	1130/1243	1177	1434	94.7	115.4	20.7
1-AI-C	N.Havasu - Topock 230 kV Mead 345/230 kV Transformer	Davis - McConnico 230 kV	1130/1243	1176	1433	94.6	115.3	20.7
1-AI-C	Peacock - White Hill 345 kV Black Mesa - Topock 230 kV	Davis - McConnico 230 kV	1130/1243	1172	1429	94.4	115.0	20.7
1-AI-C	White Hill - Mead 345 kV Black Mesa - Topock 230 kV	Davis - McConnico 230 kV	1130/1243	1170	1427	94.2	114.8	20.7
1-AI-C	Black Mesa - Topock 230 kV Mead 345/230 kV Transformer	Davis - McConnico 230 kV	1130/1243	1169	1426	94.1	114.7	20.7
1-AI-C	Peacock - White Hill 345 kV Davis - Mead N 230 kV	Davis - McConnico 230 kV	1130/1243	1110	1349	89.3	108.6	19.3

Table A-1. (continued) 2008 Heavy Summer – Liberty PST In-Service – NAEP Generation displaces generation in Nevada.

						Percent of Emergency Rating		
Case	CONTINGENCY	AFFECTED ELEMENT	Norm/Emer Rating (Amps)	Pre-Project Loading (Amps)	Post-Project Loading (Amps)	Pre-Project	Post-Project	Project Impact
1-AI-C	White Hill - Mead 345 kV Davis - Mead N 230 kV	Davis - McConnico 230 kV	1130/1243	1107	1347	89.1	108.4	19.3
1-AI-C	Davis - Mead N 230 kV Mead 345/230 kV Transformer	Davis - McConnico 230 kV	1130/1243	1106	1345	89.0	108.3	19.3
1-AI-C	Peacock - White Hill 345 kV Davis - Mc Cullough 230 kV	Davis - McConnico 230 kV	1130/1243	1103	1341	88.8	107.9	19.2
1-AI-C	White Hill - Mead 345 kV Davis - Mc Cullough 230 kV	Davis - McConnico 230 kV	1130/1243	1100	1338	88.5	107.7	19.2
1-AI-C	Davis - Mc Cullough 230 kV Mead 345/230 kV Transformer	Davis - McConnico 230 kV	1130/1243	1098	1337	88.4	107.6	19.2
1-AI-C	South Pt - Topock No.1 230 kV South Pt - Topock No.2 230 kV	Davis - McConnico 230 kV	1130/1243	1042	1252	83.9	100.8	16.9
1-AI-C	Davis - McConnico 230 kV Griffith - Peacock 230 kV	Hilltop - McConnico 230 kV	1130/1243	1257	1724	101.1	138.7	37.6
1-AI-C	Davis - McConnico 230 kV Griffith - Peacock 230 kV	Hilltop - Peacock 230 kV	1130/1243	1002	1463	80.6	117.8	37.2
1-AI-C	Peacock - White Hill 345 kV Griffith - McConnico 230 kV	Hilltop - Peacock 230 kV	1130/1243	1246	1450	100.3	116.7	16.5
1-AI-C	White Hill - Mead 345 kV Griffith - McConnico 230 kV	Hilltop - Peacock 230 kV	1130/1243	1241	1445	99.9	116.3	16.4
1-AI-C	Griffith - McConnico 230 kV Mead 345/230 kV Transformer	Hilltop - Peacock 230 kV	1130/1243	1239	1441	99.7	116.0	16.3
1-AI-C	Peacock 345/230 kV Transfmr Griffith - McConnico 230 kV	Hilltop - Peacock 230 kV	1130/1243	1005	1294	80.9	104.1	23.3
1-AI-C	Peacock 345/230 kV Transfmr Davis - McConnico 230 kV	Prescott - Yavapai 230 kV	670/811	530	885	65.4	109.1	43.7
1-AI-C	Peacock 345/230 kV Transfmr Davis - McConnico 230 kV	Round Valley - Peacock 230 kV	816/897	1028	1534	114.6	170.9	56.3
1-AI-C	Peacock 345/230 kV Transfmr Davis - McConnico 230 kV	Round Valley - Prescott 230 kV	816/897	999	1504	111.3	167.6	56.3

Table A-1. (continued) 2008 Heavy Summer – Liberty PST In-Service – NAEP Generation displaces generation in Nevada.

						Percent of Emergency Rating		
Case	CONTINGENCY	AFFECTED ELEMENT	Norm/Emer Rating (Amps)	Pre-Project Loading (Amps)	Post-Project Loading (Amps)	Pre-Project	Post-Project	Project Impact
3-Al-max-C	Hilltop - McConnico 230 kV Griffith - Peacock 230 kV	Davis - McConnico 230 kV	1130/1243	1276	1733	102.7	139.5	36.8
3-Al-max-C	Griffith - Peacock 230 kV Hilltop - Peacock 230 kV	Davis - McConnico 230 kV	1130/1243	1023	1470	82.3	118.3	36.0
3-Al-max-C	Peacock - White Hill 345 kV Griffith - Peacock 230 kV	Davis - McConnico 230 kV	1130/1243	1151	1443	92.7	116.2	23.5
3-Al-max-C	White Hill - Mead 345 kV Griffith - Peacock 230 kV	Davis - McConnico 230 kV	1130/1243	1149	1441	92.5	116.0	23.5
3-Al-max-C	Griffith - Peacock 230 kV Mead 345/230 kV Transformer	Davis - McConnico 230 kV	1130/1243	1148	1439	92.4	115.8	23.4
3-Al-max-C	Peacock - White Hill 345 kV Hilltop - McConnico 230 kV	Davis - McConnico 230 kV	1130/1243	1127	1400	90.7	112.7	22.0
3-Al-max-C	Peacock - White Hill 345 kV Topock - ZORB 230 kV	Davis - McConnico 230 kV	1130/1243	1139	1399	91.7	112.6	21.0
3-Al-max-C	White Hill - Mead 345 kV Hilltop - McConnico 230 kV	Davis - McConnico 230 kV	1130/1243	1124	1398	90.5	112.5	22.0
3-Al-max-C	White Hill - Mead 345 kV Topock - ZORB 230 kV	Davis - McConnico 230 kV	1130/1243	1137	1397	91.5	112.5	20.9
3-Al-max-C	Hilltop - McConnico 230 kV Mead 345/230 kV Transformer	Davis - McConnico 230 kV	1130/1243	1123	1396	90.4	112.4	22.0
3-Al-max-C	Topock - ZORB 230 kV Mead 345/230 kV Transformer	Davis - McConnico 230 kV	1130/1243	1136	1396	91.4	112.4	20.9
3-Al-max-C	Peacock - White Hill 345 kV Davis - Topock No.2 230 kV	Davis - McConnico 230 kV	1130/1243	1131	1390	91.0	111.9	20.9
3-Al-max-C	White Hill - Mead 345 kV Davis - Topock No.2 230 kV	Davis - McConnico 230 kV	1130/1243	1129	1388	90.9	111.7	20.9
3-Al-max-C	Davis - Topock No.2 230 kV Mead 345/230 kV Transformer	Davis - McConnico 230 kV	1130/1243	1128	1387	90.8	111.6	20.9
3-Al-max-C	Peacock - White Hill 345 kV Liberty - Westwing 230 kV	Davis - McConnico 230 kV	1130/1243	1122	1386	90.3	111.5	21.2

Table A-1. (continued) 2008 Heavy Summer – Liberty PST In-Service – NAEP Generation displaces generation in Nevada.

						Percent of Emergency Rating		
Case	CONTINGENCY	AFFECTED ELEMENT	Norm/Emer Rating (Amps)	Pre-Project Loading (Amps)	Post-Project Loading (Amps)	Pre-Project	Post-Project	Project Impact
3-Al-max-C	Peacock - White Hill 345 kV Mead S - Mead N No.1 230 kV	Davis - McConnico 230 kV	1130/1243	1122	1385	90.3	111.5	21.2
3-Al-max-C	Peacock - White Hill 345 kV Mead S - Mead N No.2 230 kV	Davis - McConnico 230 kV	1130/1243	1122	1385	90.3	111.5	21.2
3-Al-max-C	Peacock - White Hill 345 kV Mead - White Hill 345 kV	Davis - McConnico 230 kV	1130/1243	1122	1385	90.3	111.5	21.2
3-Al-max-C	Peacock - White Hill 345 kV Mead 345/230 kV Transformer	Davis - McConnico 230 kV	1130/1243	1122	1385	90.3	111.5	21.2
3-Al-max-C	Peacock - White Hill 345 kV S.Point - Topock No.1 230 kV	Davis - McConnico 230 kV	1130/1243	1122	1385	90.3	111.5	21.2
3-Al-max-C	Peacock - White Hill 345 kV S.Point - Topock No.2 230 kV	Davis - McConnico 230 kV	1130/1243	1122	1385	90.3	111.5	21.2
3-Al-max-C	White Hill - Mead 345 kV Liberty - Westwing 230 kV	Davis - McConnico 230 kV	1130/1243	1120	1384	90.1	111.4	21.2
3-Al-max-C	White Hill - Mead 345 kV Mead 345/230 kV Transformer	Davis - McConnico 230 kV	1130/1243	1120	1383	90.2	111.3	21.2
3-Al-max-C	White Hill - Mead 345 kV Mead S - Mead N No.1 230 kV	Davis - McConnico 230 kV	1130/1243	1120	1383	90.2	111.3	21.2
3-Al-max-C	White Hill - Mead 345 kV Mead S - Mead N No.2 230 kV	Davis - McConnico 230 kV	1130/1243	1120	1383	90.2	111.3	21.2
3-Al-max-C	White Hill - Mead 345 kV S.Point - Topock No.1 230 kV	Davis - McConnico 230 kV	1130/1243	1120	1383	90.1	111.3	21.2
3-Al-max-C	White Hill - Mead 345 kV S.Point - Topock No.2 230 kV	Davis - McConnico 230 kV	1130/1243	1120	1383	90.1	111.3	21.2
3-Al-max-C	Liberty - Westwing 230 kV Mead 345/230 kV Transformer	Davis - McConnico 230 kV	1130/1243	1119	1382	90.0	111.2	21.2
3-Al-max-C	Mead S - Mead N No.1 230 kV Mead 345/230 kV Transformer	Davis - McConnico 230 kV	1130/1243	1119	1382	90.1	111.2	21.1
3-Al-max-C	Mead S - Mead N No.2 230 kV Mead 345/230 kV Transformer	Davis - McConnico 230 kV	1130/1243	1119	1382	90.1	111.2	21.1

Table A-1. (continued) 2008 Heavy Summer – Liberty PST In-Service – NAEP Generation displaces generation in Nevada.

						Percent of Emergency Rating		
Case	CONTINGENCY	AFFECTED ELEMENT	Norm/Emer Rating (Amps)	Pre-Project Loading (Amps)	Post-Project Loading (Amps)	Pre-Project	Post-Project	Project Impact
3-Al-max-C	South Pt - Topock No.1 230 kV Mead 345/230 kV Transformer	Davis - McConnico 230 kV	1130/1243	1119	1382	90.1	111.2	21.1
3-Al-max-C	South Pt - Topock No.2 230 kV Mead 345/230 kV Transformer	Davis - McConnico 230 kV	1130/1243	1119	1382	90.1	111.2	21.1
3-Al-max-C	Peacock - White Hill 345 kV Davis - ZORB 230 kV	Davis - McConnico 230 kV	1130/1243	1112	1372	89.5	110.4	20.9
3-Al-max-C	White Hill - Mead 345 kV Davis - ZORB 230 kV	Davis - McConnico 230 kV	1130/1243	1110	1369	89.3	110.2	20.9
3-Al-max-C	Davis - ZORB 230 kV Mead 345/230 kV Transformer	Davis - McConnico 230 kV	1130/1243	1109	1368	89.2	110.1	20.9
3-Al-max-C	Peacock - White Hill 345 kV Hilltop - Peacock 230 kV	Davis - McConnico 230 kV	1130/1243	1070	1343	86.1	108.1	22.0
3-Al-max-C	White Hill - Mead 345 kV Hilltop - Peacock 230 kV	Davis - McConnico 230 kV	1130/1243	1068	1341	86.0	107.9	21.9
3-Al-max-C	Hilltop - Peacock 230 kV Mead 345/230 kV Transformer	Davis - McConnico 230 kV	1130/1243	1067	1339	85.9	107.8	21.9
3-Al-max-C	Peacock - White Hill 345 kV N.Havasu - Topock 230 kV	Davis - McConnico 230 kV	1130/1243	1070	1327	86.1	106.8	20.7
3-Al-max-C	White Hill - Mead 345 kV N.Havasu - Topock 230 kV	Davis - McConnico 230 kV	1130/1243	1068	1325	85.9	106.6	20.7
3-Al-max-C	N.Havasu - Topock 230 kV Mead 345/230 kV Transformer	Davis - McConnico 230 kV	1130/1243	1066	1323	85.8	106.5	20.7
3-Al-max-C	Peacock - White Hill 345 kV Black Mesa - Topock 230 kV	Davis - McConnico 230 kV	1130/1243	1064	1320	85.6	106.3	20.6
3-Al-max-C	White Hill - Mead 345 kV Black Mesa - Topock 230 kV	Davis - McConnico 230 kV	1130/1243	1062	1318	85.4	106.0	20.6
3-Al-max-C	Black Mesa - Topock 230 kV Mead 345/230 kV Transformer	Davis - McConnico 230 kV	1130/1243	1060	1316	85.3	105.9	20.6
3-Al-max-C	Davis - McConnico 230 kV Griffith - Peacock 230 kV	Hilltop - McConnico 230 kV	1130/1243	1289	1760	103.8	141.6	37.9

Table A-1. (continued) 2008 Heavy Summer – Liberty PST In-Service – NAEP Generation displaces generation in Nevada.

						Percent of Emergency Rating		
Case	CONTINGENCY	AFFECTED ELEMENT	Norm/Emer Rating (Amps)	Pre-Project Loading (Amps)	Post-Project Loading (Amps)	Pre-Project	Post-Project	Project Impact
3-Al-max-C	Davis - McConnico 230 kV Griffith - Peacock 230 kV	Hilltop - Peacock 230 kV	1130/1243	1033	1499	83.2	120.6	37.5
3-Al-max-C	Peacock - White Hill 345 kV Griffith - McConnico 230 kV	Hilltop - Peacock 230 kV	1130/1243	1143	1347	92.0	108.4	16.5
3-Al-max-C	White Hill - Mead 345 kV Griffith - McConnico 230 kV	Hilltop - Peacock 230 kV	1130/1243	1138	1341	91.6	108.0	16.4
3-Al-max-C	Griffith - McConnico 230 kV Mead 345/230 kV Transformer	Hilltop - Peacock 230 kV	1130/1243	1135	1338	91.4	107.7	16.3
3-Al-max-C	Peacock 345/230 kV Transfmr Davis - McConnico 230 kV	Prescott - Yavapai 230 kV	670/811	566	859	69.8	105.9	36.1
3-Al-max-C	Peacock 345/230 kV Transfmr Davis - McConnico 230 kV	Round Valley - Peacock 230 kV	816/897	1066	1503	118.8	167.4	48.6
3-Al-max-C	Peacock - White Hill 345 kV Davis - McConnico 230 kV	Round Valley - Peacock 230 kV	816/897	750	938	83.6	104.5	20.9
3-Al-max-C	White Hill - Mead 345 kV Davis - McConnico 230 kV	Round Valley - Peacock 230 kV	816/897	710	934	80.0	104.0	24.0
3-Al-max-C	Davis - McConnico 230 kV Mead 345/230 kV Transformer	Round Valley - Peacock 230 kV	816/897	744	931	82.9	103.7	20.8
3-Al-max-C	Peacock 345/230 kV Transfmr Davis - McConnico 230 kV	Round Valley - Prescott 230 kV	816/897	1036	1474	115.5	164.2	48.8
3-Al-max-C	Peacock - White Hill 345 kV Davis - McConnico 230 kV	Round Valley - Prescott 230 kV	816/897	722	909	80.4	101.3	20.9
3-Al-max-C	White Hill - Mead 345 kV Davis - McConnico 230 kV	Round Valley - Prescott 230 kV	816/897	718	905	80.1	100.8	20.8
3-Al-max-C	Davis - McConnico 230 kV Mead 345/230 kV Transformer	Round Valley - Prescott 230 kV	816/897	709	902	79.8	100.6	20.8

Table A-2. 2008 Heavy Summer – Liberty PST In-Service – NAEP Generation serving regional load growth.

						Percent of Emergency Rating		
Case	CONTINGENCY	AFFECTED ELEMENT	Norm/Emer Rating (Amps)	Pre-Project Loading (Amps)	Post-Project Loading (Amps)	Pre-Project	Post-Project	Project Impact
2-LD-B	Peacock - WhiteHill 345 kV	Davis - McConnico 230 kV	1130/1243	1234	1442	99.3	116.0	16.7
2-LD-B	WhiteHill - Mead 345 kV	Davis - McConnico 230 kV	1130/1243	1232	1347	99.1	108.4	9.3
2-LD-B	Mead 345/230 kV Transformer	Davis - McConnico 230 kV	1130/1243	1230	1346	99.0	108.3	9.3
4-LD-max-B	Peacock - WhiteHill 345 kV	Davis - McConnico 230 kV	1130/1243	1122	1328	90.3	106.9	16.6
2-LD-C	Hilltop - McConnico 230 kV Griffith - Peacock 230 kV	Davis - McConnico 230 kV	1130/1243	1244	1698	100.1	136.6	36.5
2-LD-C	Peacock - White Hill 345 kV Griffith - Peacock 230 kV	Davis - McConnico 230 kV	1130/1243	1248	1484	100.4	119.5	19.0
2-LD-C	Peacock - White Hill 345 kV Hilltop - McConnico 230 kV	Davis - McConnico 230 kV	1130/1243	1222	1454	98.4	117.0	18.7
2-LD-C	Peacock - White Hill 345 kV Topock - ZORB 230 kV	Davis - McConnico 230 kV	1130/1243	1243	1447	100.0	116.4	16.4
2-LD-C	Peacock - White Hill 345 kV Mead S - Mead N No.1 230 kV	Davis - McConnico 230 kV	1130/1243	1234	1442	99.3	116.0	16.8
2-LD-C	Peacock - White Hill 345 kV Mead S - Mead N No.2 230 kV	Davis - McConnico 230 kV	1130/1243	1234	1442	99.3	116.0	16.8
2-LD-C	Peacock - White Hill 345 kV S.Point - Topock No.1 230 kV	Davis - McConnico 230 kV	1130/1243	1234	1442	99.3	116.0	16.7
2-LD-C	Peacock - White Hill 345 kV S.Point - Topock No.2 230 kV	Davis - McConnico 230 kV	1130/1243	1234	1442	99.3	116.0	16.7
2-LD-C	Peacock - White Hill 345 kV Liberty - Westwing 230 kV	Davis - McConnico 230 kV	1130/1243	1232	1441	99.2	116.0	16.8
2-LD-C	Peacock - White Hill 345 kV Mead - White Hill 345 kV	Davis - McConnico 230 kV	1130/1243	1234	1438	99.3	115.7	16.4
2-LD-C	Peacock - White Hill 345 kV Mead 345/230 kV Transformer	Davis - McConnico 230 kV	1130/1243	1234	1438	99.3	115.7	16.4
2-LD-C	Peacock - White Hill 345 kV Davis - Topock No.2 230 kV	Davis - McConnico 230 kV	1130/1243	1234	1437	99.3	115.7	16.4
2-LD-C	Peacock - White Hill 345 kV Davis - ZORB 230 kV	Davis - McConnico 230 kV	1130/1243	1216	1420	97.9	114.3	16.4
2-LD-C	White Hill - Mead 345 kV Griffith - Peacock 230 kV	Davis - McConnico 230 kV	1130/1243	1247	1399	100.3	112.6	12.2
2-LD-C	Griffith - Peacock 230 kV Mead 345/230 kV Transformer	Davis - McConnico 230 kV	1130/1243	1246	1398	100.3	112.5	12.2

Table A-2. (continued) 2008 Heavy Summer – Liberty PST In-Service – NAEP Generation serving regional load growth.

						Percent of Emergency Rating		
Case	CONTINGENCY	AFFECTED ELEMENT	Norm/Emer Rating (Amps)	Pre-Project Loading (Amps)	Post-Project Loading (Amps)	Pre-Project	Post-Project	Project Impact
2-LD-C	Peacock - White Hill 345 kV Hilltop - Peacock 230 kV	Davis - McConnico 230 kV	1130/1243	1166	1377	93.8	110.9	17.0
2-LD-C	Peacock - White Hill 345 kV Black Mesa - Topock 230 kV	Davis - McConnico 230 kV	1130/1243	1172	1376	94.4	110.7	16.4
2-LD-C	Peacock - White Hill 345 kV N.Havasu - Topock 230 kV	Davis - McConnico 230 kV	1130/1243	1179	1376	94.9	110.7	15.9
2-LD-C	White Hill - Mead 345 kV Hilltop - McConnico 230 kV	Davis - McConnico 230 kV	1130/1243	1221	1370	98.2	110.2	12.0
2-LD-C	Hilltop - McConnico 230 kV Mead 345/230 kV Transformer	Davis - McConnico 230 kV	1130/1243	1219	1369	98.1	110.2	12.0
2-LD-C	White Hill - Mead 345 kV Topock - ZORB 230 kV	Davis - McConnico 230 kV	1130/1243	1241	1352	99.9	108.8	9.0
2-LD-C	Topock - ZORB 230 kV Mead 345/230 kV Transformer	Davis - McConnico 230 kV	1130/1243	1240	1351	99.8	108.8	9.0
2-LD-C	Griffith - Peacock 230 kV Hilltop - Peacock 230 kV	Davis - McConnico 230 kV	1130/1243	989	1351	80.0	108.8	28.8
2-LD-C	White Hill - Mead 345 kV Mead 345/230 kV Transformer	Davis - McConnico 230 kV	1130/1243	1232	1347	99.1	108.4	9.3
2-LD-C	White Hill - Mead 345 kV Mead S - Mead N No.1 230 kV	Davis - McConnico 230 kV	1130/1243	1232	1347	99.1	108.4	9.3
2-LD-C	White Hill - Mead 345 kV Mead S - Mead N No.2 230 kV	Davis - McConnico 230 kV	1130/1243	1232	1347	99.1	108.4	9.3
2-LD-C	White Hill - Mead 345 kV S.Point - Topock No.1 230 kV	Davis - McConnico 230 kV	1130/1243	1232	1347	99.1	108.4	9.2
2-LD-C	White Hill - Mead 345 kV S.Point - Topock No.2 230 kV	Davis - McConnico 230 kV	1130/1243	1232	1347	99.1	108.4	9.2
2-LD-C	Mead S - Mead N No.1 230 kV Mead 345/230 kV Transformer	Davis - McConnico 230 kV	1130/1243	1230	1346	99.0	108.3	9.3
2-LD-C	Mead S - Mead N No.2 230 kV Mead 345/230 kV Transformer	Davis - McConnico 230 kV	1130/1243	1230	1346	99.0	108.3	9.3
2-LD-C	South Pt - Topock No.1 230 kV Mead 345/230 kV Transformer	Davis - McConnico 230 kV	1130/1243	1231	1346	99.1	108.3	9.2

Table A-2. (continued) 2008 Heavy Summer – Liberty PST In-Service – NAEP Generation serving regional load growth.

						Percent of Emergency Rating		
Case	CONTINGENCY	AFFECTED ELEMENT	Norm/Emer Rating (Amps)	Pre-Project Loading (Amps)	Post-Project Loading (Amps)	Pre-Project	Post-Project	Project Impact
2-LD-C	South Pt - Topock No.2 230 kV Mead 345/230 kV Transformer	Davis - McConnico 230 kV	1130/1243	1231	1346	99.1	108.3	9.2
2-LD-C	White Hill - Mead 345 kV Liberty - Westwing 230 kV	Davis - McConnico 230 kV	1130/1243	1230	1345	99.0	108.2	9.2
2-LD-C	Liberty - Westwing 230 kV Mead 345/230 kV Transformer	Davis - McConnico 230 kV	1130/1243	1229	1344	98.9	108.1	9.2
2-LD-C	White Hill - Mead 345 kV Davis - Topock No.2 230 kV	Davis - McConnico 230 kV	1130/1243	1232	1343	99.1	108.1	8.9
2-LD-C	Davis - Topock No.2 230 kV Mead 345/230 kV Transformer	Davis - McConnico 230 kV	1130/1243	1231	1342	99.0	108.0	9.0
2-LD-C	White Hill - Mead 345 kV Davis - ZORB 230 kV	Davis - McConnico 230 kV	1130/1243	1214	1325	97.7	106.7	9.0
2-LD-C	Davis - ZORB 230 kV Mead 345/230 kV Transformer	Davis - McConnico 230 kV	1130/1243	1212	1324	97.6	106.6	9.0
2-LD-C	Peacock - White Hill 345 kV Davis - Mead N 230 kV	Davis - McConnico 230 kV	1130/1243	1110	1304	89.3	105.0	15.7
2-LD-C	Peacock - White Hill 345 kV Davis - Mc Cullough 230 kV	Davis - McConnico 230 kV	1130/1243	1103	1300	88.8	104.6	15.9
2-LD-C	White Hill - Mead 345 kV Hilltop - Peacock 230 kV	Davis - McConnico 230 kV	1130/1243	1164	1294	93.7	104.1	10.4
2-LD-C	Hilltop - Peacock 230 kV Mead 345/230 kV Transformer	Davis - McConnico 230 kV	1130/1243	1163	1293	93.6	104.1	10.5
2-LD-C	White Hill - Mead 345 kV Black Mesa - Topock 230 kV	Davis - McConnico 230 kV	1130/1243	1170	1282	94.2	103.2	9.0
2-LD-C	White Hill - Mead 345 kV N.Havasu - Topock 230 kV	Davis - McConnico 230 kV	1130/1243	1177	1282	94.7	103.2	8.5
2-LD-C	Black Mesa - Topock 230 kV Mead 345/230 kV Transformer	Davis - McConnico 230 kV	1130/1243	1169	1281	94.1	103.1	9.1
2-LD-C	N.Havasu - Topock 230 kV Mead 345/230 kV Transformer	Davis - McConnico 230 kV	1130/1243	1176	1281	94.6	103.1	8.5
2-LD-C	Davis - McConnico 230 kV Griffith - Peacock 230 kV	Hilltop - McConnico 230 kV	1130/1243	1257	1721	101.1	138.5	37.4

Table A-2. (continued) 2008 Heavy Summer – Liberty PST In-Service – NAEP Generation serving regional load growth.

						Percent of Emergency Rating		
Case	CONTINGENCY	AFFECTED ELEMENT	Norm/Emer Rating (Amps)	Pre-Project Loading (Amps)	Post-Project Loading (Amps)	Pre-Project	Post-Project	Project Impact
2-LD-C	Peacock - White Hill 345 kV Griffith - McConnico 230 kV	Hilltop - Peacock 230 kV	1130/1243	1246	1481	100.3	119.2	18.9
2-LD-C	White Hill - Mead 345 kV Griffith - McConnico 230 kV	Hilltop - Peacock 230 kV	1130/1243	1241	1390	99.9	111.8	11.9
2-LD-C	Griffith - McConnico 230 kV Mead 345/230 kV Transformer	Hilltop - Peacock 230 kV	1130/1243	1239	1387	99.7	111.6	11.9
2-LD-C	Davis - McConnico 230 kV Griffith - Peacock 230 kV	Hilltop - Peacock 230 kV	1130/1243	1002	1373	80.6	110.5	29.9
2-LD-C	Peacock 345/230 kV Transfrmr Griffith - McConnico 230 kV	Hilltop - Peacock 230 kV	1130/1243	1005	1331	80.9	107.1	26.3
2-LD-C	Peacock 345/230 kV Transfrmr Davis - McConnico 230 kV	Prescott - Yavapai 230 kV	670/811	530	927	65.4	114.3	48.9
2-LD-C	Peacock 345/230 kV Transfrmr Davis - McConnico 230 kV	Round Valley - Peacock 230 kV	816/897	1028	1560	114.6	173.8	59.3
2-LD-C	Peacock 345/230 kV Transfrmr Davis - McConnico 230 kV	Round Valley - Prescott 230 kV	816/897	999	1527	111.3	170.1	58.9
4-LD-max-C	Hilltop - McConnico 230 kV Griffith - Peacock 230 kV	Davis - McConnico 230 kV	1130/1243	1276	1733	102.7	139.4	36.7
4-LD-max-C	Peacock - White Hill 345 kV Griffith - Peacock 230 kV	Davis - McConnico 230 kV	1130/1243	1151	1386	92.7	111.5	18.9
4-LD-max-C	Griffith - Peacock 230 kV Hilltop - Peacock 230 kV	Davis - McConnico 230 kV	1130/1243	1023	1382	82.3	111.2	28.9
4-LD-max-C	Peacock - White Hill 345 kV Hilltop - McConnico 230 kV	Davis - McConnico 230 kV	1130/1243	1127	1356	90.7	109.2	18.5
4-LD-max-C	Peacock - White Hill 345 kV Topock - ZORB 230 kV	Davis - McConnico 230 kV	1130/1243	1139	1341	91.7	107.9	16.3
4-LD-max-C	Peacock - White Hill 345 kV Davis - Topock No.2 230 kV	Davis - McConnico 230 kV	1130/1243	1131	1332	91.0	107.2	16.2
4-LD-max-C	Peacock - White Hill 345 kV Liberty - Westwing 230 kV	Davis - McConnico 230 kV	1130/1243	1122	1329	90.3	106.9	16.6
4-LD-max-C	Peacock - White Hill 345 kV Mead S - Mead N No.1 230 kV	Davis - McConnico 230 kV	1130/1243	1122	1328	90.3	106.9	16.6

Table A-2. (continued) 2008 Heavy Summer – Liberty PST In-Service – NAEP Generation serving regional load growth.

						Percent of Emergency Rating		
Case	CONTINGENCY	AFFECTED ELEMENT	Norm/Emer Rating (Amps)	Pre-Project Loading (Amps)	Post-Project Loading (Amps)	Pre-Project	Post-Project	Project Impact
4-LD-max-C	Peacock - White Hill 345 kV Mead S - Mead N No.2 230 kV	Davis - McConnico 230 kV	1130/1243	1122	1328	90.3	106.9	16.6
4-LD-max-C	Peacock - White Hill 345 kV S.Point - Topock No.1 230 kV	Davis - McConnico 230 kV	1130/1243	1122	1328	90.3	106.9	16.6
4-LD-max-C	Peacock - White Hill 345 kV S.Point - Topock No.2 230 kV	Davis - McConnico 230 kV	1130/1243	1122	1328	90.3	106.9	16.6
4-LD-max-C	Peacock - White Hill 345 kV Mead - White Hill 345 kV	Davis - McConnico 230 kV	1130/1243	1122	1324	90.3	106.6	16.3
4-LD-max-C	Peacock - White Hill 345 kV Mead 345/230 kV Transformer	Davis - McConnico 230 kV	1130/1243	1122	1324	90.3	106.6	16.3
4-LD-max-C	Peacock - White Hill 345 kV Davis - ZORB 230 kV	Davis - McConnico 230 kV	1130/1243	1112	1314	89.5	105.7	16.2
4-LD-max-C	White Hill - Mead 345 kV Griffith - Peacock 230 kV	Davis - McConnico 230 kV	1130/1243	1149	1300	92.5	104.6	12.1
4-LD-max-C	Griffith - Peacock 230 kV Mead 345/230 kV Transformer	Davis - McConnico 230 kV	1130/1243	1148	1299	92.4	104.5	12.1
4-LD-max-C	Peacock - White Hill 345 kV Hilltop - Peacock 230 kV	Davis - McConnico 230 kV	1130/1243	1070	1280	86.1	103.0	16.9
4-LD-max-C	White Hill - Mead 345 kV Hilltop - McConnico 230 kV	Davis - McConnico 230 kV	1130/1243	1124	1272	90.5	102.4	11.9
4-LD-max-C	Hilltop - McConnico 230 kV Mead 345/230 kV Transformer	Davis - McConnico 230 kV	1130/1243	1123	1271	90.4	102.3	11.9
4-LD-max-C	Peacock - White Hill 345 kV Black Mesa - Topock 230 kV	Davis - McConnico 230 kV	1130/1243	1064	1265	85.6	101.8	16.2
4-LD-max-C	Peacock - White Hill 345 kV N.Havasu - Topock 230 kV	Davis - McConnico 230 kV	1130/1243	1070	1265	86.1	101.8	15.7
4-LD-max-C	White Hill - Mead 345 kV Topock - ZORB 230 kV	Davis - McConnico 230 kV	1130/1243	1137	1247	91.5	100.4	8.9
4-LD-max-C	Topock - ZORB 230 kV Mead 345/230 kV Transformer	Davis - McConnico 230 kV	1130/1243	1136	1246	91.4	100.3	8.9
4-LD-max-C	Davis - McConnico 230 kV Griffith - Peacock 230 kV	Hilltop - McConnico 230 kV	1130/1243	1289	1753	103.8	141.1	37.4

Table A-2. (continued) 2008 Heavy Summer – Liberty PST In-Service – NAEP Generation serving regional load growth.

						Percent of Emergency Rating		
Case	CONTINGENCY	AFFECTED ELEMENT	Norm/Emer Rating (Amps)	Pre-Project Loading (Amps)	Post-Project Loading (Amps)	Pre-Project	Post-Project	Project Impact
4-LD-max-C	Davis - McConnico 230 kV Griffith - Peacock 230 kV	Hilltop - Peacock 230 kV	1130/1243	1033	1405	83.2	113.0	29.9
4-LD-max-C	Peacock - White Hill 345 kV Griffith - McConnico 230 kV	Hilltop - Peacock 230 kV	1130/1243	1143	1376	92.0	110.7	18.8
4-LD-max-C	White Hill - Mead 345 kV Griffith - McConnico 230 kV	Hilltop - Peacock 230 kV	1130/1243	1138	1285	91.6	103.5	11.9
4-LD-max-C	Griffith - McConnico 230 kV Mead 345/230 kV Transformer	Hilltop - Peacock 230 kV	1130/1243	1135	1282	91.4	103.2	11.8
4-LD-max-C	Peacock 345/230 kV Transfrmr Griffith - McConnico 230 kV	Hilltop - Peacock 230 kV	1130/1243	934	1262	82.8	101.5	18.7
4-LD-max-C	Peacock 345/230 kV Transfrmr Davis - McConnico 230 kV	Prescott - Yavapai 230 kV	670/811	566	903	69.8	111.4	41.6
4-LD-max-C	Peacock 345/230 kV Transfrmr Davis - McConnico 230 kV	Round Valley - Peacock 230 kV	816/897	1066	1532	118.8	170.7	51.9
4-LD-max-C	Peacock 345/230 kV Transfrmr Davis - McConnico 230 kV	Round Valley - Prescott 230 kV	816/897	1036	1500	115.5	167.2	51.7

Table A-3. 2008 Heavy Summer – Liberty PST By-Passed – NAEP Generation displaces generation in Nevada.

						Percent of Emergency Rating		
Case	CONTINGENCY	AFFECTED ELEMENT	Norm/Emer Rating (Amps)	Pre-Project Loading (Amps)	Post-Project Loading (Amps)	Pre-Project	Post-Project	Project Impact
1-AI-C	Hilltop - McConnico 230 kV Griffith - Peacock 230 kV	Davis - McConnico 230 kV	1130/1243	1244	1696	100.1	136.5	36.4
1-AI-C	Griffith - Peacock 230 kV Hilltop - Peacock 230 kV	Davis - McConnico 230 kV	1130/1243	989	1436	80.0	115.6	35.6
1-AI-C	Davis - McConnico 230 kV Griffith - Peacock 230 kV	Hilltop - McConnico 230 kV	1130/1243	1249	1708	100.5	137.4	36.9
1-AI-C	Davis - McConnico 230 kV Griffith - Peacock 230 kV	Hilltop - Peacock 230 kV	1130/1243	997	1450	80.2	116.7	36.5
1-AI-C	Peacock 345/230 kV Xfmr Griffith - McConnico 230 kV	Hilltop - Peacock 230 kV	1130/1243	1017	1309	81.8	105.3	23.5
1-AI-C	Peacock 345/230 kV Xfmr Davis - McConnico 230 kV	Round Valley - Peacock 230 kV	816/897	1029	1532	114.6	170.7	56.1
1-AI-C	Peacock 345/230 kV Xfmr Davis - McConnico 230 kV	Round Valley - Prescott 230 kV	816/897	999	1495	111.3	167.3	56.0
3-AI-max-C	Griffith - Peacock 230 kV Hilltop - Peacock 230 kV	Davis - McConnico 230 kV	1130/1243	1023	1444	82.3	116.2	33.9
3-AI-max-C	Davis - McConnico 230 kV Griffith - Peacock 230 kV	Hilltop - McConnico 230 kV	1130/1243	1280	1714	103.0	137.9	35.0
3-AI-max-C	Davis - McConnico 230 kV Griffith - Peacock 230 kV	Hilltop - Peacock 230 kV	1130/1243	1027	1460	82.7	117.5	34.8
3-AI-max-C	Peacock 345/230 kV Xfmr Davis - McConnico 230 kV	Round Valley - Peacock 230 kV	816/897	1067	1763	118.8	**196.4***	77.6
3-AI-max-C	Peacock 345/230 kV Xfmr Davis - McConnico 230 kV	Round Valley - Prescott 230 kV	816/897	1037	1720	115.5	**192.7***	77.2

*Required a synchronous condenser for a solution. This contingency results in a voltage collapse in the local area.

Table A-4. 2008 Heavy Summer – Liberty PST By-Passed – NAEP Generation serving regional load growth.

						Percent of Emergency Rating		
Case	CONTINGENCY	AFFECTED ELEMENT	Norm/Emer Rating (Amps)	Pre-Project Loading (Amps)	Post-Project Loading (Amps)	Pre-Project	Post-Project	Project Impact
2-LD-C	Hilltop - McConnico 230 kV Griffith - Peacock 230 kV	Davis - McConnico 230 kV	1130/1243	1244	1696	100.1	136.5	36.4
2-LD-C	Griffith - Peacock 230 kV Hilltop - Peacock 230 kV	Davis - McConnico 230 kV	1130/1243	989	1350	80.0	108.6	28.6
2-LD-C	Davis - McConnico 230 kV Griffith - Peacock 230 kV	Hilltop - McConnico 230 kV	1130/1243	1249	1705	100.5	137.2	36.7
2-LD-C	Davis - McConnico 230 kV Griffith - Peacock 230 kV	Hilltop - Peacock 230 kV	1130/1243	997	1361	80.2	109.6	29.3
2-LD-C	Peacock 345/230 kV Xfmr Griffith - McConnico 230 kV	Hilltop - Peacock 230 kV	1130/1243	1017	1342	81.8	108.0	26.2
2-LD-C	Peacock 345/230 kV Xfmr Davis - McConnico 230 kV	Prescott - Yavapai 230 kV	670/811	536	937	66.1	115.6	49.5
2-LD-C	Peacock 345/230 kV Xfmr Davis - McConnico 230 kV	Round Valley - Peacock 230 kV	816/897	1029	1567	114.6	174.6	60.0
2-LD-C	Peacock 345/230 kV Xfmr Davis - McConnico 230 kV	Round Valley - Prescott 230 kV	816/897	999	1533	111.3	170.9	59.5
4-LD-max-C	Hilltop - McConnico 230 kV Griffith - Peacock 230 kV	Davis - McConnico 230 kV	1130/1243	1276	1707	102.7	137.4	34.6
4-LD-max-C	Griffith - Peacock 230 kV Hilltop - Peacock 230 kV	Davis - McConnico 230 kV	1130/1243	1023	1357	82.3	109.2	26.8
4-LD-max-C	Davis - McConnico 230 kV Griffith - Peacock 230 kV	Hilltop - McConnico 230 kV	1130/1243	1280	1710	103.0	137.7	34.7
4-LD-max-C	Davis - McConnico 230 kV Griffith - Peacock 230 kV	Hilltop - Peacock 230 kV	1130/1243	1027	1371	82.7	110.3	27.7
4-LD-max-C	Peacock 345/230 kV Xfmr Griffith - McConnico 230 kV	Hilltop - Peacock 230 kV	1130/1243	946	1259	76.2	101.3	25.1
4-LD-max-C	Peacock 345/230 kV Xfmr Davis - McConnico 230 kV	Prescott - Yavapai 230 kV	670/811	574	907	70.8	111.8	41.0
4-LD-max-C	Peacock 345/230 kV Xfmr Davis - McConnico 230 kV	Round Valley - Peacock 230 kV	816/897	1067	1528	118.8	170.3	51.4
4-LD-max-C	Peacock 345/230 kV Xfmr Davis - McConnico 230 kV	Round Valley - Prescott 230 kV	816/897	1037	1496	115.5	166.7	51.2

Table A-5. 2008 Heavy Summer – Post-Transient Voltage Deviations – NAEP Generation displaces generation in Nevada.

			Voltage Deviation		
Case	**Contingency**	**Affected Bus**	**Pre-Project**	**Liberty PST In-Service Post-Project**	**Liberty PST By-Passed Post-Project**
1-Al	Hassayampa-N.Gila 500 kV	KOFA 161.0	5.6	5.8	5.7
3-Al-max	Hassayampa-N.Gila 500 kV	KOFA 161.0	8.2	8.4	8.4
		WLTNMOHK 161.0	7.6	7.7	7.7
		DOME TAP 161.0	7.6	7.8	7.7
		GILA 161.0	7.4	7.5	7.5
		KNOB 161.0	6.0	6.1	6.1
		GILA 69.0	5.8	6.0	5.9
		GOLDMNTP 161.0	5.8	5.9	5.9
		ARABY 69.0	5.6	5.8	5.7
		NGILATAP 69.0	5.6	5.8	5.7
		SONORA 69.0	5.6	5.7	5.6
		SONORA 34.5	5.4	5.5	5.4
		YUCCA161 161.0	5.2	5.3	5.3
		PILOTKNB 161.0	5.2	5.3	5.3
		YUCCGT21 13.8	5.2	5.3	5.3
		FOOTHILS 69.0	5.1	5.2	5.2
		PKNOBD2 100.0	5.1	5.2	5.2
		PILOTKN2 13.8	5.1	5.2	5.1
1-Al	Peacock 345/230 kV Tran & Davis-McConnico 230 kV	ROUNDVLY 230.0	8.0	Diverged	Diverged
		BAGDAD 115.0	6.4	Diverged	Diverged
		PEACOCK 230.0	5.2	Diverged	Diverged
		PRESCOTT 115.0	5.1	Diverged	Diverged
3-Al-max	Peacock 345/230 kV Tran & Davis-McConnico 230 kV	ROUNDVLY 230.0	8.6	Diverged	Diverged
		BAGDAD 115.0	6.8	Diverged	Diverged
		PEACOCK 230.0	5.6	Diverged	Diverged
		PRESCOTT 115.0	5.4	Diverged	Diverged
		PRESCOT2 100.0	5.3	Diverged	Diverged
		PRESCOT1 100.0	5.3	Diverged	Diverged
		PRESCOTT 230.0	5.2	Diverged	Diverged

Table A-6. 2008 Heavy Summer – Post-Transient Voltage Deviations – NAEP Generation serving regional load growth.

			Voltage Deviation		
Case	**Contingency**	**Affected Bus**	**Pre-Project**	**Liberty PST In-Service Post-Project**	**Liberty PST By-Passed Post-Project**
2-LD	Hassayampa-N.Gila 500 kV	KOFA 161	5.6	5.7	
4-LD-max	Hassayampa-N.Gila 500 kV	ARABY 69.0	5.6	5.6	5.6
		DOME TAP 161.0	7.6	7.6	7.6
		FOOTHILS 69.0	5.1	5.1	5
		GILA 69.0	5.8	5.8	5.8
		GILA 161.0	7.4	7.4	7.3
		GOLDMNTP 161.0	5.8	5.7	5.8
		KNOB 161.0	6.0	6.0	6
		KOFA 161.0	8.2	8.2	8.2
		NGILATAP 69.0	5.6	5.6	5.6
		PILOTKN2 13.8	5.1	5.1	5.1
		PILOTKNB 161.0	5.2	5.2	5.2
		PKNOBD2 100.0	5.1	5.1	5.1
		SONORA 34.5	5.4	5.4	5.3
		SONORA 69.0	5.6	5.5	5.5
		WLTNMOHK 161.0	7.6	7.6	7.6
		YUCCA161 161.0	5.2	5.2	5.2
		YUCCGT21 13.8	5.2	5.2	5.2
2-LD	Peacock 345/230 kV Tran & Davis-McConnico 230 kV	BAGDAD 115.0	6.4	15.6	16.0
		HILLTOP 230.0	NA	7.3	7.1
		MCCONICO 230.0	NA	5.8	5.6
		PEACOCK 230.0	5.2	10.5	10.4
		PRESCOT1 100.0	NA	11.9	12.2
		PRESCOT2 100.0	NA	11.9	12.2
		PRESCOTT 115.0	5.1	12.1	12.5
		PRESCOTT 230.0	NA	11.6	11.9
		ROUNDVLY 230.0	8.0	18.1	18.1
		VERDE 230.0	NA	5.2	5.8
		YAVAPAI 230.0	NA	6.0	6.4

Table A-6. (continued) 2008 Heavy Summer – Post-Transient Voltage Deviations – NAEP Generation serving regional load growth.

			Voltage Deviation		
Case	**Contingency**	**Affected Bus**	**Pre-Project**	**Liberty PST In-Service Post-Project**	**Liberty PST By-Passed Post-Project**
4-LD-max	Peacock 345/230 kV Tran & Davis-McConnico 230 kV	BAGDAD 115.0	6.8	14.2	Diverged
		PEACOCK 230.0	5.6	6.7	Diverged
		PRESCOT1 100.0	5.3	10.8	Diverged
		PRESCOT2 100.0	5.3	10.8	Diverged
		PRESCOTT 115.0	5.4	11.1	Diverged
		PRESCOTT 230.0	5.2	10.6	Diverged
		ROUNDVLY 230.0	8.6	14.4	Diverged
		VERDE 230.0	NA	5.2	
		YAVAPAI 230.0	NA	5.7	

Appendix B

Power Flow Plots

Northern Arizona Energy Project SIS Power Flow Plots

Plot	Description
	Liberty Phase-Shift Transformer In-Service at 450 MW (south to north)
Plot #1	2008 Heavy Autumn – Normal Conditions - Before Project, Minimum WAPA Generation (MW/%)
Plot #2	2008 Heavy Autumn – Normal Conditions - After Project – Minimum WAPA Gen, NAEP displaces Nevada Generation (AI) (MW/%)
Plot #3	2008 Heavy Autumn – Normal Conditions - After Project – Minimum WAPA Gen, NAEP serves regional Load (LD) (MW/%)
Plot #4	2008 Heavy Autumn – Normal Conditions - Before Project, Maximum WAPA Generation (MW/%)
Plot #5	2008 Heavy Autumn – Normal Conditions - After Project – Maximum WAPA Gen, NAEP displaces Nevada Generation (max AI) (MW/%)
Plot #6	2008 Heavy Autumn – Normal Conditions - After Project – Maximum WAPA Gen, NAEP serves regional Load (max LD) (MW/%)
	CONTINGENCIES
Plot #7	2008 Heavy Autumn – Emergency Conditions - Before Project, min WAPA Gen: Loss of Peacock-Mead 345kV (MW/%)
Plot #8	2008 Heavy Autumn – Emergency Conditions - After Project, min WAPA Gen - AI: Loss of Peacock-Mead 345kV (MW/%)
Plot #9	2008 Heavy Autumn – Emergency Conditions - After Project, min WAPA Gen – LD: Loss of Peacock-Mead 345kV (MW/%)
Plot #10	2008 Heavy Autumn – Emergency Conditions - Before Project, min WAPA Gen: Loss of Griffith-Peacock 230kV and Davis-Mc Connico 230 kV (MW/%)
Plot #11	2008 Heavy Autumn – Emergency Conditions - After Project, min WAPA Gen - AI: Loss of Griffith-Peacock 230kV and Davis-Mc Connico 230 kV (MW/%)
Plot #12	2008 Heavy Autumn – Emergency Conditions - After Project, min WAPA Gen – LD: Loss of Griffith-Peacock 230kV and Davis-Mc Connico 230 kV (MW/%)
Plot #13	2008 Heavy Autumn – Emergency Conditions - Before Project, min WAPA Gen: Loss of Griffith-Peacock 230kV and Hilltop-Mc Connico 230 kV (MW/%)
Plot #14	2008 Heavy Autumn – Emergency Conditions - After Project, min WAPA Gen - AI: Loss of Griffith-Peacock 230kV and Hilltop-Mc Connico 230 kV (MW/%)
Plot #15	2008 Heavy Autumn – Emergency Conditions - After Project, min WAPA Gen – LD: Loss of Griffith-Peacock 230kV and Hilltop-Mc Connico 230 kV (MW/%)
Plot #16	2008 Heavy Autumn – Emergency Conditions - Before Project, min WAPA Gen: Loss of Peacock 345/230kV Tran and Davis-Mc Connico 230 kV (MW/%)
Plot #17	2008 Heavy Autumn – Emergency Conditions - After Project, min WAPA Gen - AI: Loss of Peacock 345/230kV Tran and Davis-Mc Connico 230 kV (MW/%)
Plot #18	2008 Heavy Autumn – Emergency Conditions - After Project, min WAPA Gen-LD: Loss of Peacock 345/230kV Tran and Davis-Mc Connico 230 kV (MW/%)
Plot #19	2008 Heavy Autumn – Emergency Conditions - Before Project, max WAPA Gen: Loss of Peacock-Mead 345kV (MW/%)
Plot #20	2008 Heavy Autumn – Emergency Conditions - After Project, max WAPA Gen - AI: Loss of Peacock-Mead 345kV (MW/%)

Plot #21	2008 Heavy Autumn – Emergency Conditions - After Project, max WAPA Gen – LD: Loss of Peacock-Mead 345kV (MW/%)
Plot #22	2008 Heavy Autumn – Emergency Conditions - Before Project, max WAPA Gen: Loss of Griffith-Peacock 230kV and Davis-Mc Connico 230 kV (MW/%)
Plot #23	2008 Heavy Autumn – Emergency Conditions - After Project, max WAPA Gen - AI: Loss of Griffith-Peacock 230kV and Davis-Mc Connico 230 kV (MW/%)
Plot #24	2008 Heavy Autumn – Emergency Conditions - After Project, max WAPA Gen – LD: Loss of Griffith-Peacock 230kV and Davis-Mc Connico 230 kV (MW/%)
Plot #25	2008 Heavy Autumn – Emergency Conditions - Before Project, max WAPA Gen: Loss of Griffith-Peacock 230kV and Hilltop-Mc Connico 230 kV (MW/%)
Plot #26	2008 Heavy Autumn – Emergency Conditions - After Project, max WAPA Gen - AI: Loss of Griffith-Peacock 230kV and Hilltop-Mc Connico 230 kV (MW/%)
Plot #27	2008 Heavy Autumn – Emergency Conditions - After Project, max WAPA Gen – LD: Loss of Griffith-Peacock 230kV and Hilltop-Mc Connico 230 kV (MW/%)
Plot #28	2008 Heavy Autumn – Emergency Conditions - Before Project, max WAPA Gen: Loss of Peacock 345/230kV Tran and Davis-Mc Connico 230 kV (MW/%)
Plot #29	2008 Heavy Autumn – Emergency Conditions - After Project, max WAPA Gen-AI: Loss of Peacock 345/230kV Tran and Davis-Mc Connico 230 kV (MW/%)
Plot #30	2008 Heavy Autumn – Emergency Conditions - After Project, max WAPA Gen-LD: Loss of Peacock 345/230kV Tran and Davis-Mc Connico 230 kV (MW/%)
	Liberty Phase-Shift Transformer By-Passed
Plot #31	2008 Heavy Autumn – Normal Conditions - Before Project, Minimum WAPA Generation (MW/%)
Plot #32	2008 Heavy Autumn – Normal Conditions - After Project – Minimum WAPA Gen, NAEP displaces Nevada Generation (AI) (MW/%)
Plot #33	2008 Heavy Autumn – Normal Conditions - After Project – Minimum WAPA Gen, NAEP serves regional Load (LD) (MW/%)
Plot #34	2008 Heavy Autumn – Normal Conditions - Before Project, Maximum WAPA Generation (MW/%)
Plot #35	2008 Heavy Autumn – Normal Conditions - After Project – Maximum WAPA Gen, NAEP displaces Nevada Generation (max AI) (MW/%)
Plot #36	2008 Heavy Autumn – Normal Conditions - After Project – Maximum WAPA Gen, NAEP serves regional Load (max LD) (MW/%)
	CONTINGENCIES
Plot #37	2008 Heavy Autumn – Emergency Conditions - Before Project, min WAPA Gen: Loss of Griffith-Peacock 230kV and Davis-Mc Connico 230 kV (MW/%)
Plot #38	2008 Heavy Autumn – Emergency Conditions - After Project, min WAPA Gen - AI: Loss of Griffith-Peacock 230kV and Davis-Mc Connico 230 kV (MW/%)
Plot #39	2008 Heavy Autumn – Emergency Conditions - After Project, min WAPA Gen – LD: Loss of Griffith-Peacock 230kV and Davis-Mc Connico 230 kV (MW/%)
Plot #40	2008 Heavy Autumn – Emergency Conditions - Before Project, min WAPA Gen: Loss of Griffith-Peacock 230kV and Hilltop-Mc Connico 230 kV (MW/%)
Plot #41	2008 Heavy Autumn – Emergency Conditions - After Project, min WAPA Gen - AI: Loss of Griffith-Peacock 230kV and Hilltop-Mc Connico 230 kV (MW/%)
Plot #42	2008 Heavy Autumn – Emergency Conditions - After Project, min WAPA Gen – LD: Loss of Griffith-Peacock 230kV and Hilltop-Mc Connico 230 kV (MW/%)

Plot #43	2008 Heavy Autumn – Emergency Conditions - Before Project, min WAPA Gen: Loss of Peacock 345/230kV Tran and Davis-Mc Connico 230 kV (MW/%)
Plot #44	2008 Heavy Autumn – Emergency Conditions - After Project, min WAPA Gen - AI: Loss of Peacock 345/230kV Tran and Davis-Mc Connico 230 kV (MW/%)
Plot #45	2008 Heavy Autumn – Emergency Conditions - After Project, min WAPA Gen-LD: Loss of Peacock 345/230kV Tran and Davis-Mc Connico 230 kV (MW/%)
Plot #46	2008 Heavy Autumn – Emergency Conditions - Before Project, max WAPA Gen: Loss of Griffith-Peacock 230kV and Davis-Mc Connico 230 kV (MW/%)
Plot #47	2008 Heavy Autumn – Emergency Conditions - After Project, max WAPA Gen - AI: Loss of Griffith-Peacock 230kV and Davis-Mc Connico 230 kV (MW/%)
Plot #48	2008 Heavy Autumn – Emergency Conditions - After Project, max WAPA Gen – LD: Loss of Griffith-Peacock 230kV and Davis-Mc Connico 230 kV (MW/%)
Plot #49	2008 Heavy Autumn – Emergency Conditions - Before Project, max WAPA Gen: Loss of Griffith-Peacock 230kV and Hilltop-Mc Connico 230 kV (MW/%)
Plot #50	2008 Heavy Autumn – Emergency Conditions - After Project, max WAPA Gen - AI: Loss of Griffith-Peacock 230kV and Hilltop-Mc Connico 230 kV (MW/%)
Plot #51	2008 Heavy Autumn – Emergency Conditions - After Project, max WAPA Gen – LD: Loss of Griffith-Peacock 230kV and Hilltop-Mc Connico 230 kV (MW/%)
Plot #52	2008 Heavy Autumn – Emergency Conditions - Before Project, max WAPA Gen: Loss of Peacock 345/230kV Tran and Davis-Mc Connico 230 kV (MW/%)
Plot #53	2008 Heavy Autumn – Emergency Conditions - After Project, max WAPA Gen-AI: Loss of Peacock 345/230kV Tran and Davis-Mc Connico 230 kV (MW/%)
Plot #54	2008 Heavy Autumn – Emergency Conditions - After Project, max WAPA Gen-LD: Loss of Peacock 345/230kV Tran and Davis-Mc Connico 230 kV (MW/%)

Note: Initially the project was called Arroyo Energy Project; however, the name was changed to Northern Arizona Energy Project or NAEP after studies were completed. Any references to the Arroyo Energy Project should be denoted as the Northern Arizona Energy Project.

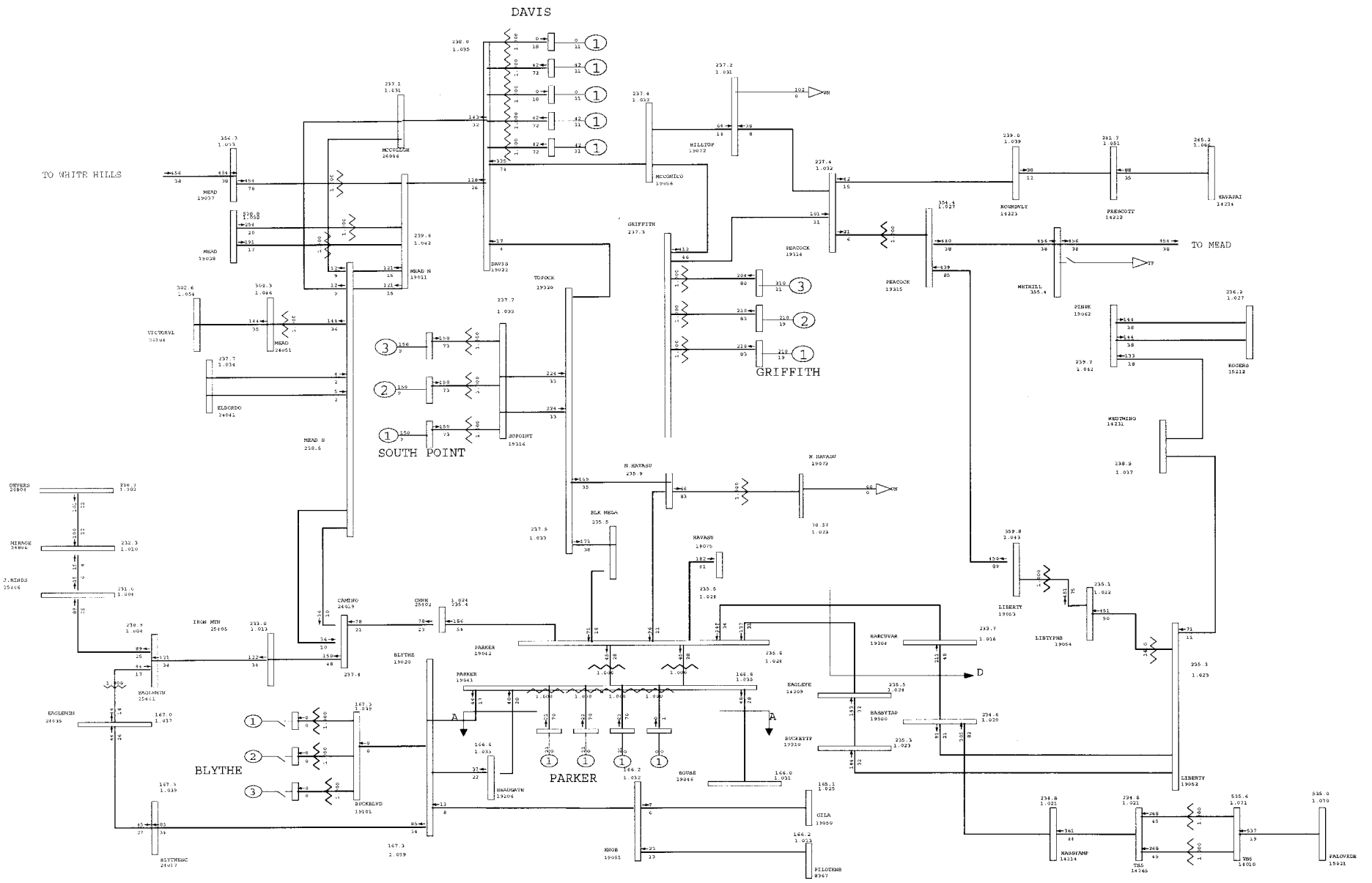

General Electric International, Inc. PSLF Program Thu Jul 19 15:17:16 2007 C:upslf16MyPSLF 8ha_pre-rev1.sav

	2008 HEAVY AUTUMN, NORTHERN ARIZONA ENERGY PROJECT, PRE-PROJECT CASE: 08ha_pre-rev1.sav EOR=9300MW, Min WAPA-DSW Generation Modeled.	Plot 1 - 2008 Heavy Autumn Normal Conditions - Before Project, Minimum WAPA Gen	MW/% rate C:upslf16MyPSLF iver1.dr Rating = 1

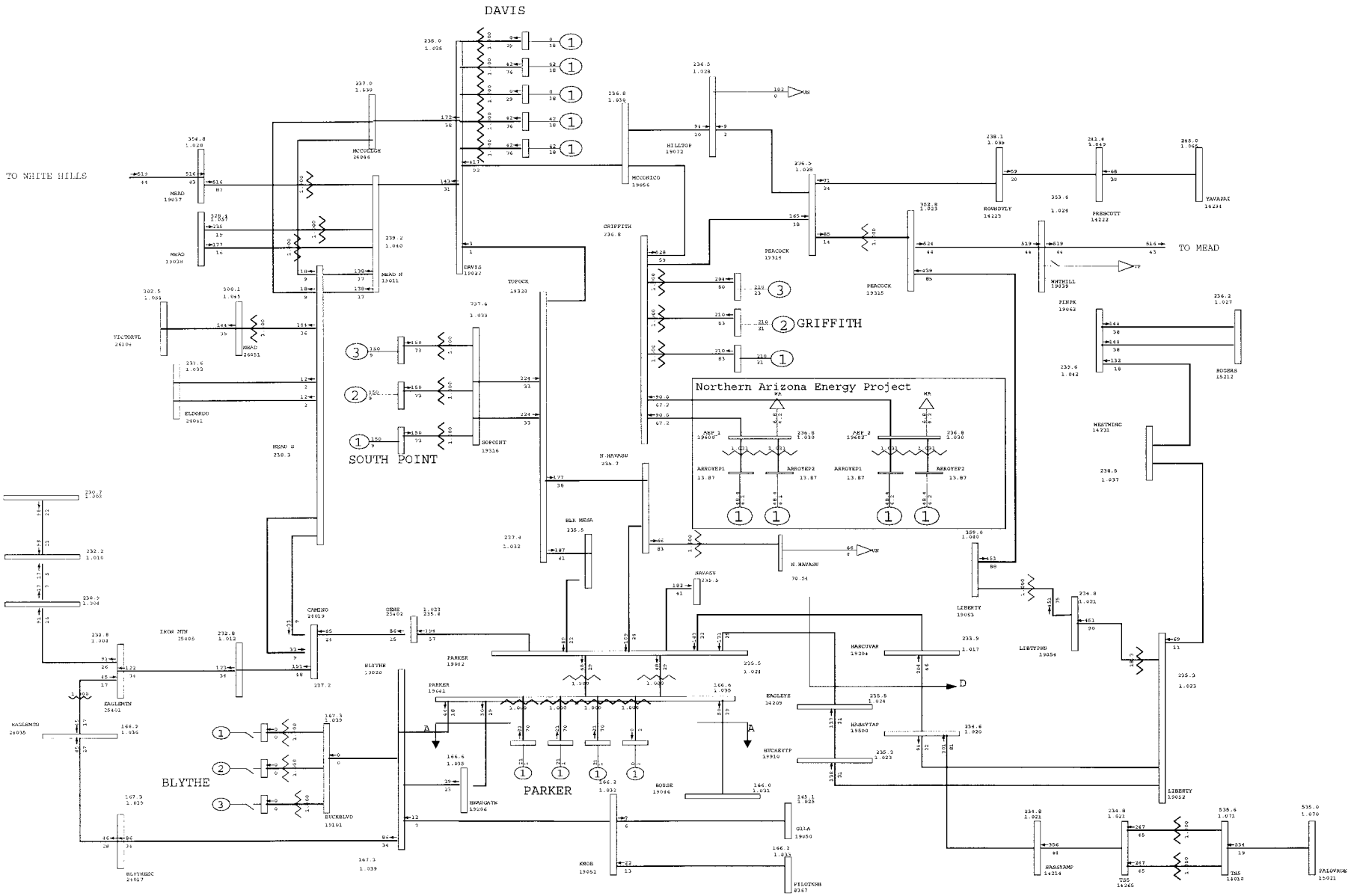
DAVIS
TO WHITE HILLS
MEAD
MCCULLGH
MEAD
MEAD N
VICTORVL
ELDORDO
MEAD S
DAVIS
TOPOCK
SOPOINT
SOUTH POINT
GRIFFITH
MCCOSMCO
HILLTOP
PEACOCK
PEACOCK
MNTMILL
TO MEAD
ROUNDVLY
PRESCOTT
YAVAPAI
PINPK
ROGERS
WEBTMING
Northern Arizona Energy Project
ARP 1
ARP 2
ARROYEP1
ARROYEP2
N.HAVASU
HAVASU
LIBERTY
LIBTYPHS
MARCUVAR
EAGLEYE
HOOVYTAP
BUCKEYTP
HOOVER
MIRAGE
MEADMIR
EAGLEMTN
IRON MTN
CAMINO
GENE
PARKER
BLYTHE
BUCKBLVD
BLYTHESC
HEADGATE
KNOB
GILA
PILOTKNB
HASSYAMP
TAP
TAZ
TAS
PALOVRDE
BLYTHE
PARKER

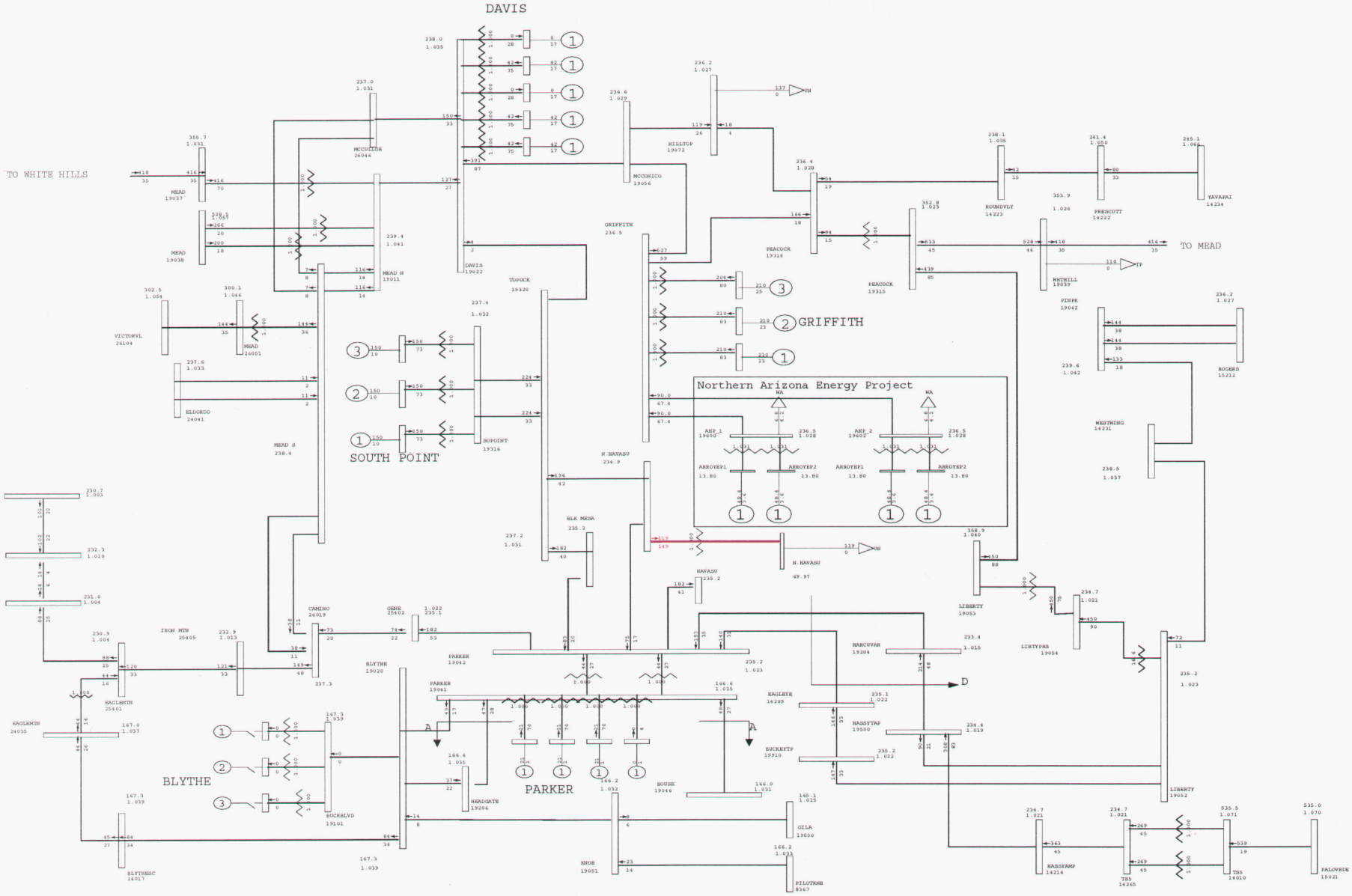
DAVIS
TO WHITE HILLS
MEAD
MEAD
MCCULLGN
MEAD N
DAVIS
TOPOCK
GRIFFITH
MCCONICO
HILLTOP
PEACOCK
PEACOCK
ROUNDVLY
PRESCOTT
YAVAPAI
TO MEAD
WNTHILL
PINPK
ROGERS
WESTWING
VICTORVL
MEAD
ELDORADO
MEAD S
SOUTH POINT
SOPOINT
GRIFFITH
Northern Arizona Energy Project
AEP_1
AEP_2
ARROYEP1
ARROYEP2
N.HAVASU
HAVASU
BLK MESA
DEVERS
MIRAGE
J.HINDS
IRON MTN
CAMINO
GENE
EAGLEMTN
BLYTHE
PARKER
BUCKBLVD
BLYTHESC
BLYTHE
PARKER
HEADGATE
BOUSE
GILA
KNOB
PILOTKNB
MARCUVAR
EAGLEYE
HASSYTAP
BUCKEYTP
LIBERTY
LIBTYPHS
HASSYAMP
TB5
PALOVRDE

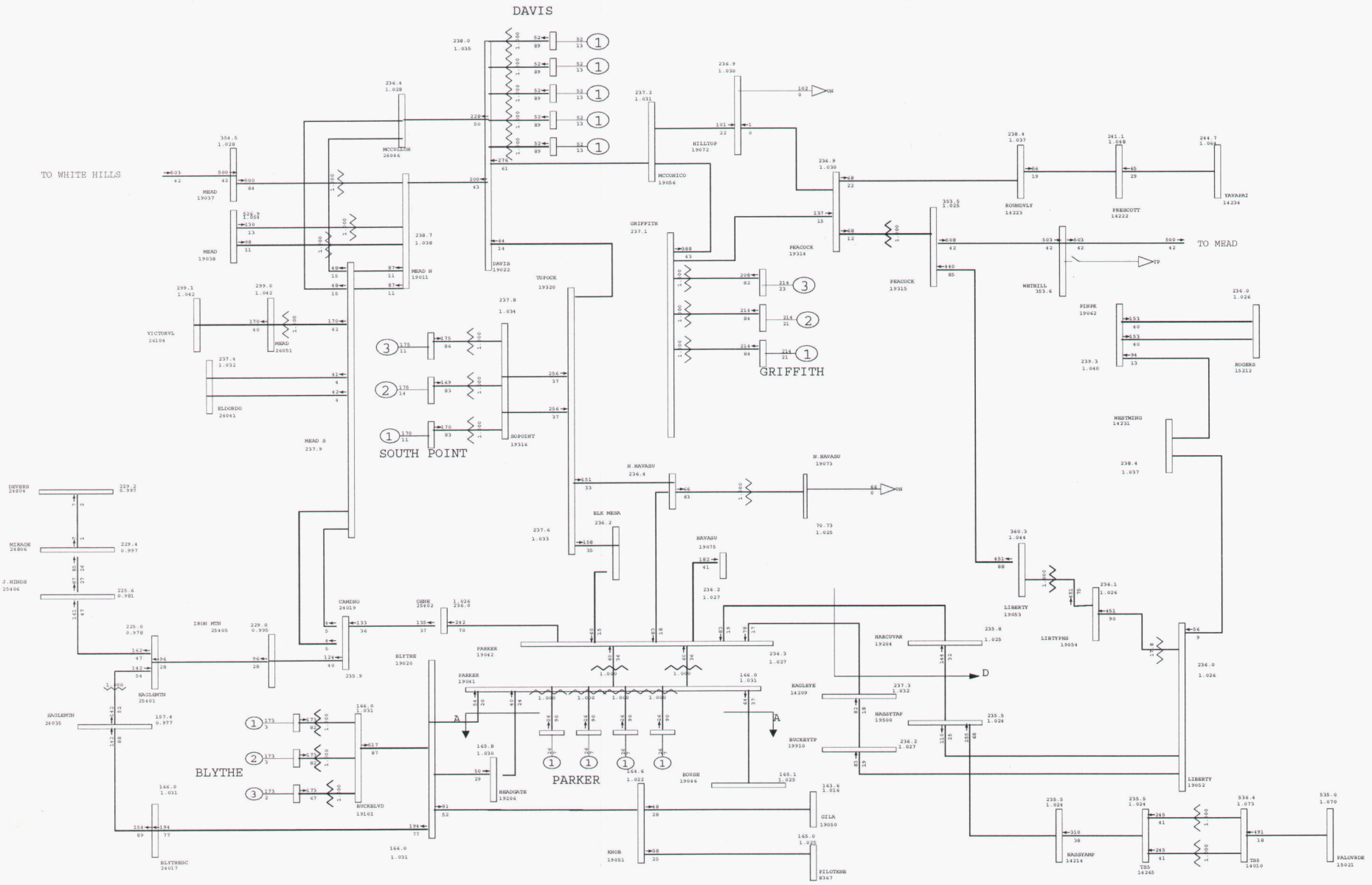

General Electric International, Inc. PSLF Program Thu Jul 19 15:17:22 2007 C:upslf16MyPSLF 8ha_pre_max-rev1.sav

	2008 HEAVY AUTUMN, NORTHERN ARIZONA ENERGY PROJECT, PRE-PROJECT CASE: 08ha_pre_max-rev1.sav EOR=9300MW, Maximum WAPA-DSW Generation Modeled.	Plot 4 - 2008 Heavy Autumn Normal Conditions - Before Project, Maximum Gen	MW/% rate C:upslf16MyPSLF iver2.dr Rating = 1

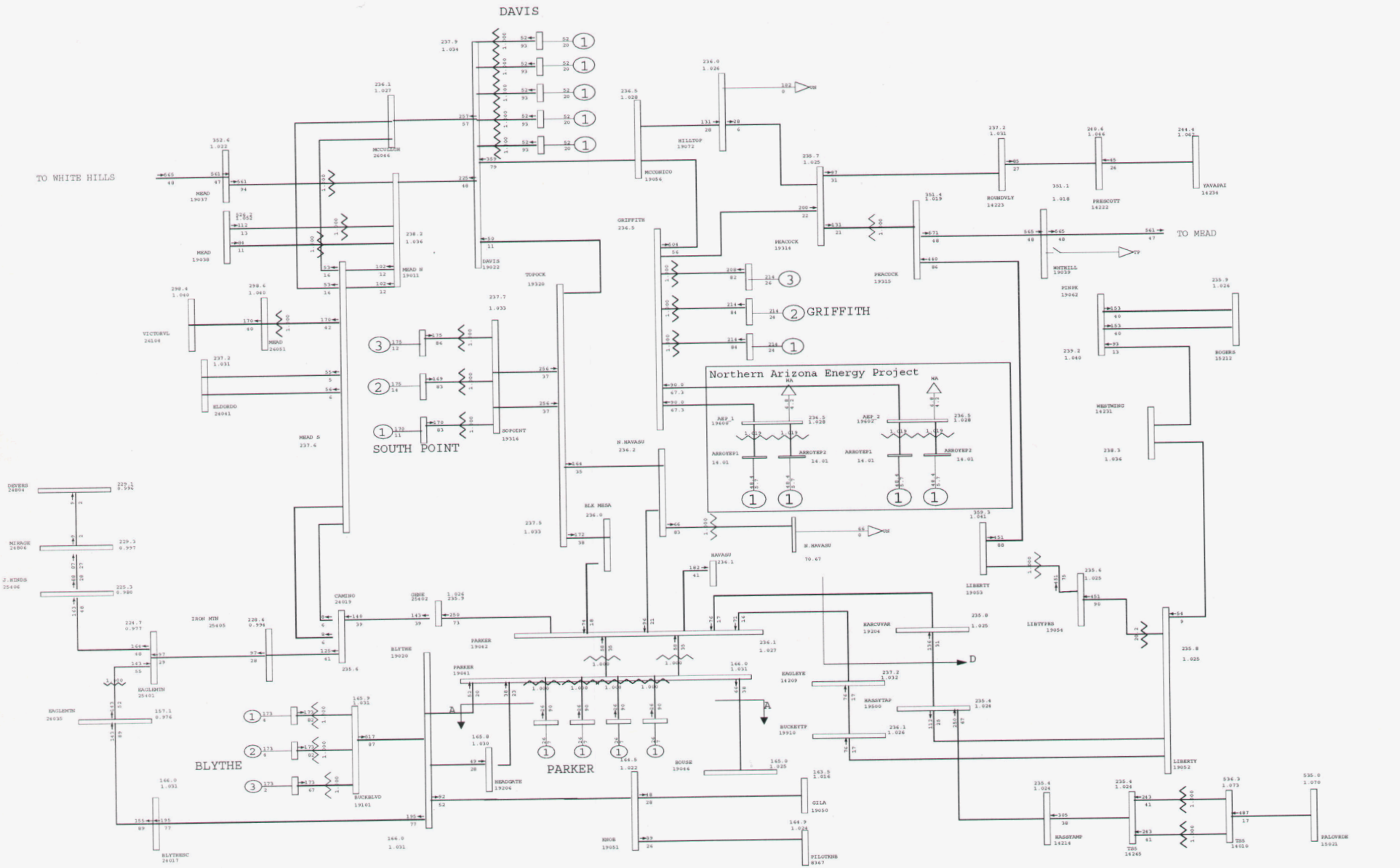

General Electric International, Inc. PSLF Program Thu Jul 19 15:17:24 2007 C:upslf16MyPSLF 8ha_pst_maxAI-rev1.sav

2008 HEAVY AUTUMN, NORTHERN ARIZONA ENERGY PROJECT, POST-PROJECT - Area Interch

CASE: 08ha_pst_maxAI-rev1.sav

EOR=9300MW, Maximum WAPA-DSW Generation Modeled.

Plot 5 - 2008 Heavy Autumn Normal Conditions - After Project, Max WAPA Gen, Are

MW/% rate

C:upslf16MyPSLF iver1-na

Rating = 1

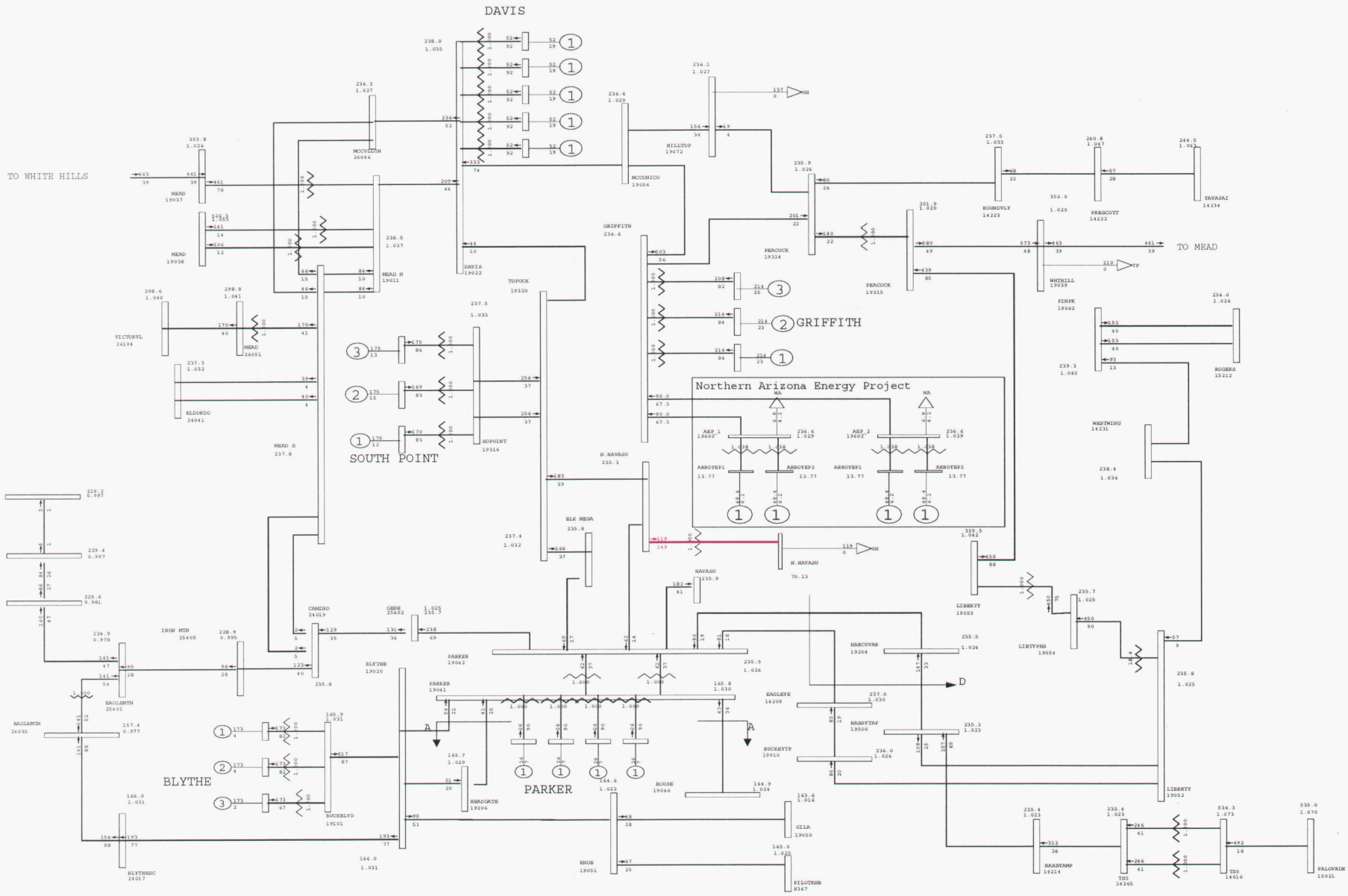

General Electric International, Inc. PSLF Program Thu Jul 19 15:17:26 2007 C:upslf16MyPSLF 8ha_pst_maxLD-rev1.sav

	2008 HEAVY AUTUMN, NORTHERN ARIZONA ENERGY PROJECT, POST-PROJECT - UNS Load Inc CASE: 08ha_pst_maxLD-rev1.sav EOR=9300MW, Maximum WAPA-DSW Generation Modeled.	Plot 6 - 2008 Heavy Autumn Normal Conditions - After Project, Max WAPA Gen, Loa	MW/% rate C:upslf16MyPSLF iver2-na Rating = 1

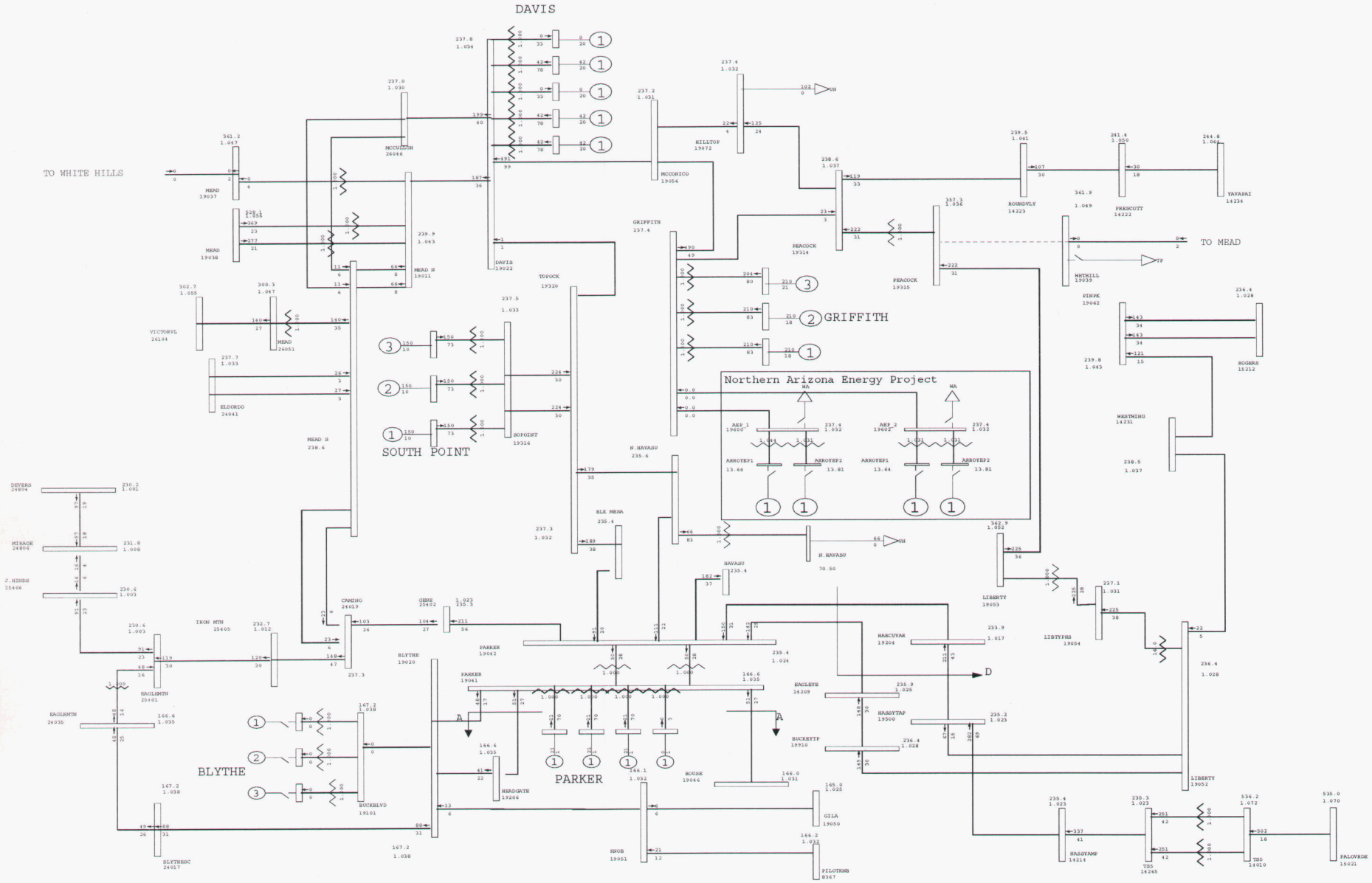

General Electric International, Inc. PSLF Program Thu Jul 19 15:17:28 2007 C:upslf16MyPSLF 8ha_pre-rev1.sav

	2008 HEAVY AUTUMN, NORTHERN ARIZONA ENERGY PROJECT, PRE-PROJECT CASE: 08ha_pre-rev1.sav EOR=9300MW, Min WAPA-DSW Generation Modeled.	Plot 7 - 2008 Heavy Autumn - Before Project, min WAPA Gen Outage: Peacock-Mead 345kV Line	MW/% rate C:upslf16MyPSLF iver2-na Rating = 2

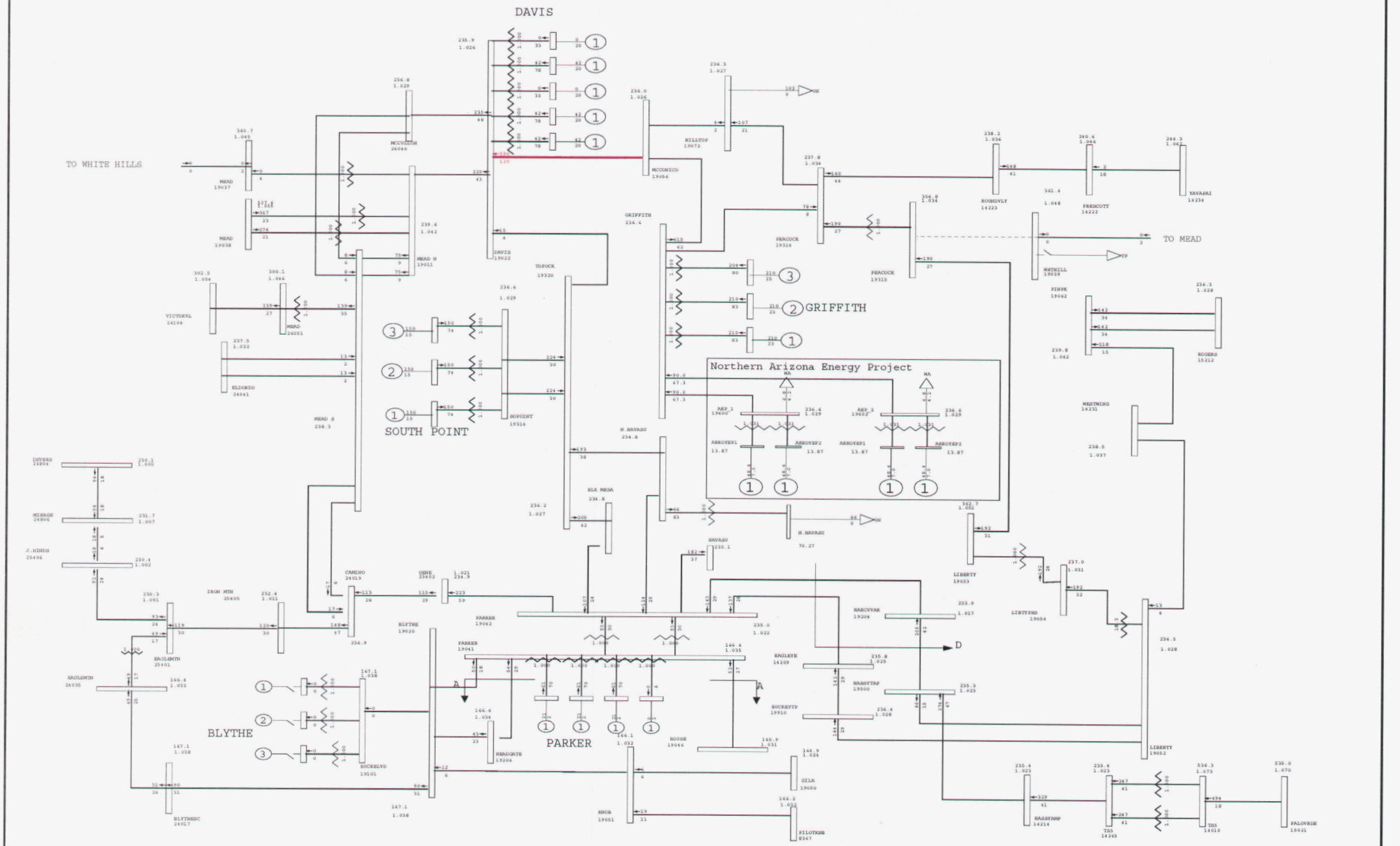

General Electric International, Inc. PSLF Program Thu Jul 19 15:17:30 2007 C:upslf16MyPSLF 8ha_pst_AI-rev1.sav

	2008 HEAVY AUTUMN, NORTHERN ARIZONA ENERGY PROJECT, POST-PROJECT - Area Interch CASE: 08ha_pst_AI-rev1.sav EOR=9300MW, Minimum WAPA-DSW Generation Modeled.	Plot 8 - 2008 Heavy Autumn - After Project, min WAPA Gen, Area Interchange Outage: Peacock-Mead 345kV Line	MW/% rate C:upslf16MyPSLF iver2-na Rating = 2

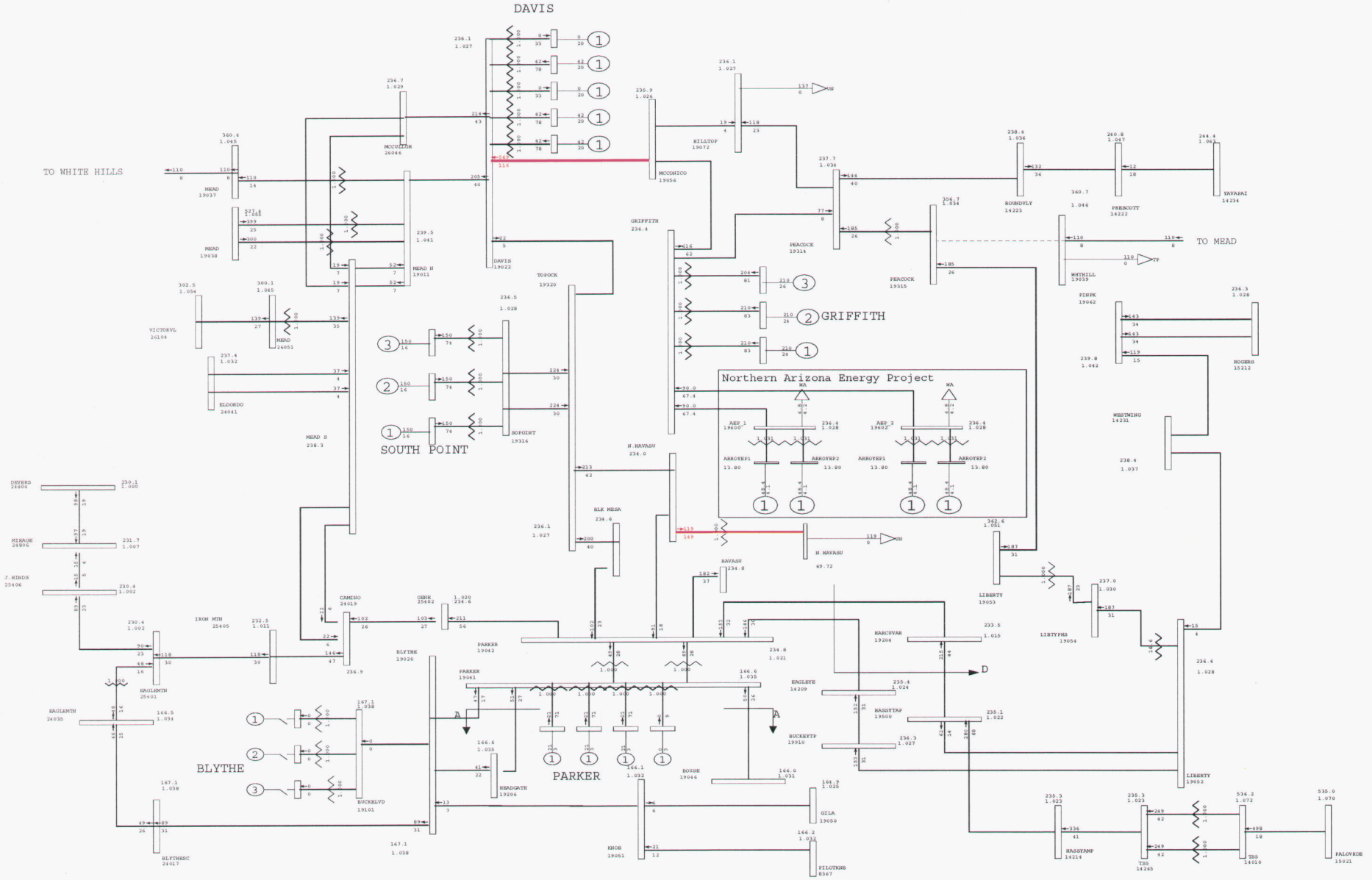

General Electric International, Inc. PSLF Program Thu Jul 19 15:17:32 2007 C:upslf16MyPSLF 8ha_pst_LD-rev1.sav

	2008 HEAVY AUTUMN, NORTHERN ARIZONA ENERGY PROJECT, POST-PROJECT - UNS Load Inc CASE: 08ha_pst_LD-rev1.sav EOR=9300MW, Minimum WAPA-DSW Generation Modeled.	Plot 9 - 2008 Heavy Autumn - After Project, min WAPA Gen, Regional Load Outage: Peacock-Mead 345kV Line	MW/% rate C:upslf16MyPSLF iver2-na Rating = 2

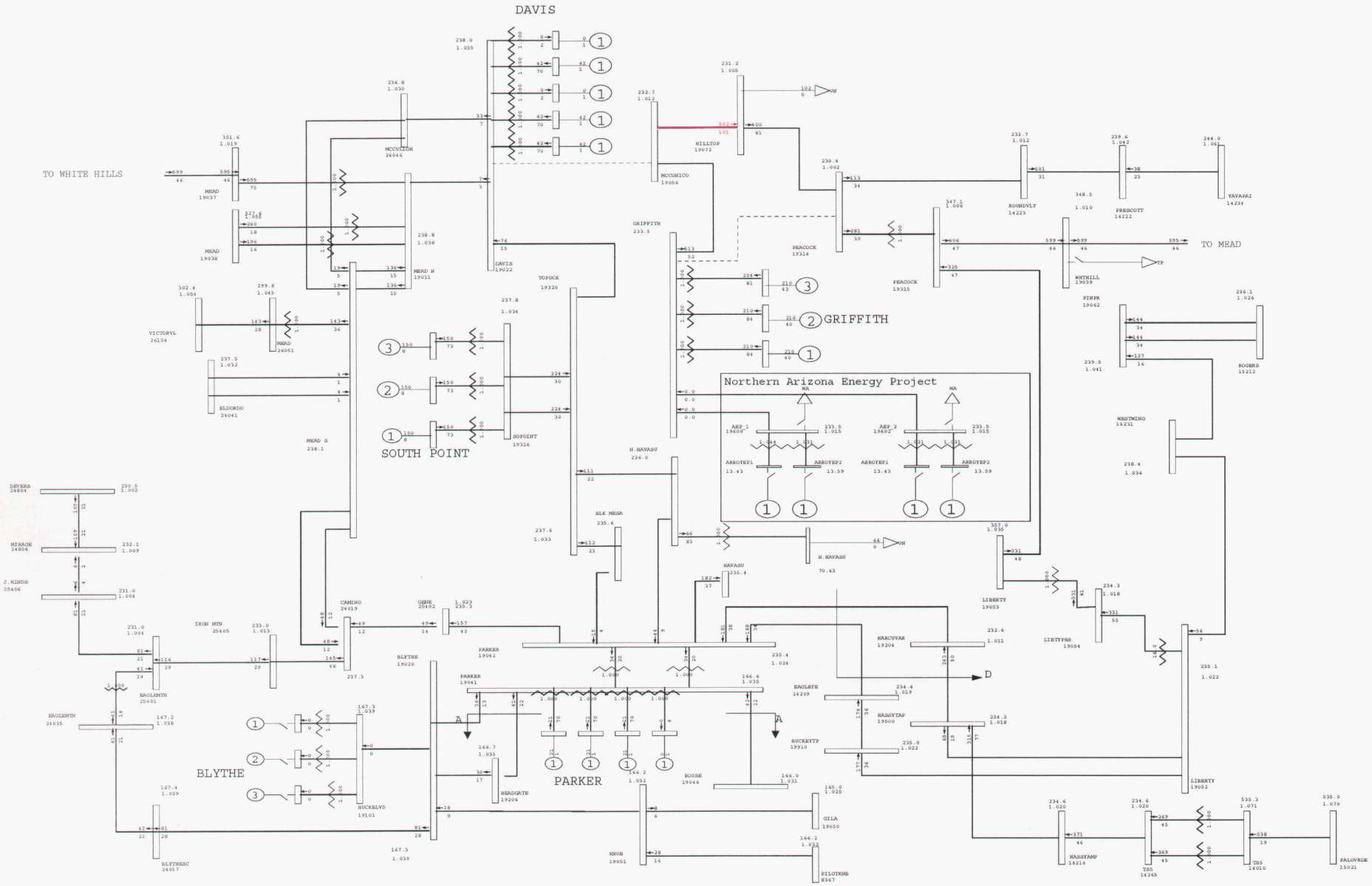

General Electric International, Inc. PSLF Program Thu Jul 19 15:17:34 2007 C:upslf16MyPSLF 8ha_pre-rev1.sav

GE	2008 HEAVY AUTUMN, NORTHERN ARIZONA ENERGY PROJECT, PRE-PROJECT CASE: 08ha_pre-rev1.sav EOR=9300MW, Min WAPA-DSW Generation Modeled.	Plot 10 - 2008 Heavy Autumn - Before Project, min WAPA Gen Outage: Griffith-Peacock & Davis-McConnico 230kV Lines	MW/% rate C:upslf16MyPSLF iver2-na Rating = 2

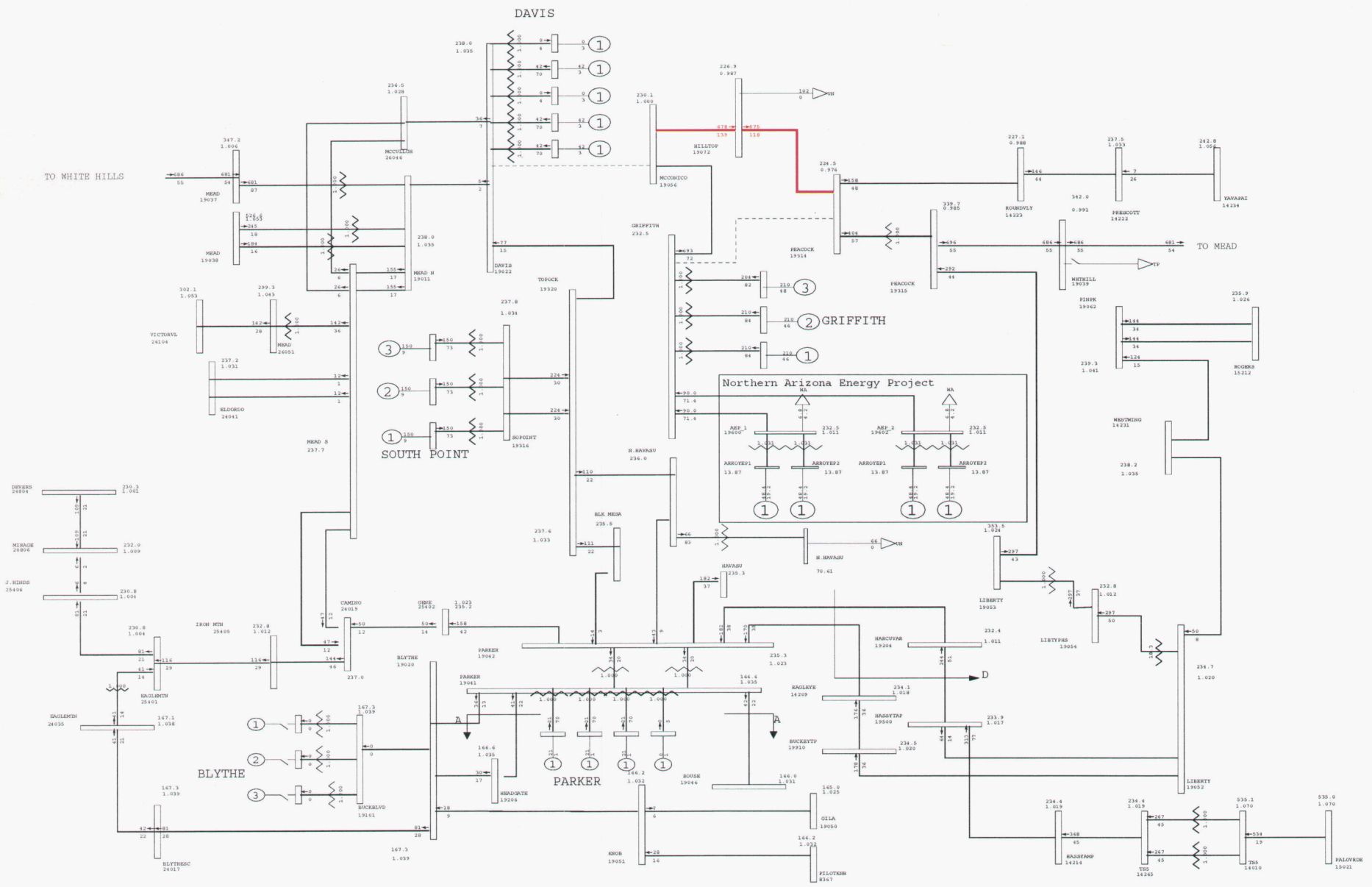

General Electric International, Inc. PSLF Program Thu Jul 19 15:17:38 2007 C:upslf16MyPSLF 8ha_pst_AI-rev1.sav

2008 HEAVY AUTUMN, NORTHERN ARIZONA ENERGY PROJECT, POST-PROJECT - Area Interch CASE: 08ha_pst_AI-rev1.sav EOR=9300MW, Minimum WAPA-DSW Generation Modeled.	Plot 11 - 2008 Heavy Autumn - After Project, min WAPA Gen, Area Interchange Outage: Griffith-Peacock & Davis-McConnico 230kV Lines	MW/% rate C:upslf16MyPSLF iver2-na Rating = 2

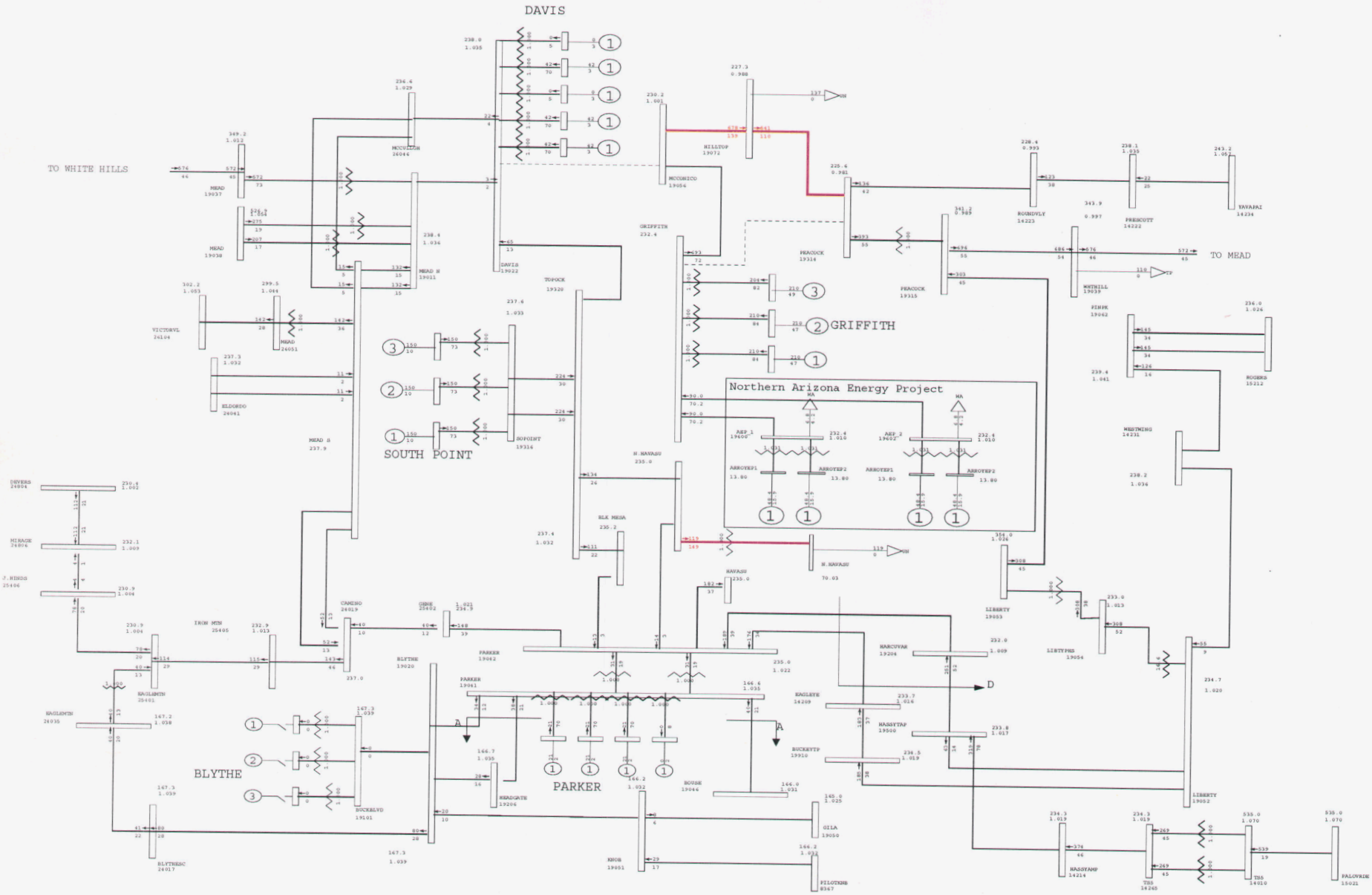

General Electric International, Inc. PSLF Program Thu Jul 19 15:17:41 2007 C:upslf16MyPSLF 8ha_pst_LD-rev1.sav

2008 HEAVY AUTUMN, NORTHERN ARIZONA ENERGY PROJECT, POST-PROJECT - UNS Load Inc

CASE: 08ha_pst_LD-rev1.sav

EOR=9300MW, Minimum WAPA-DSW Generation Modeled.

Plot 12 - 2008 Heavy Autumn - After Project, min WAPA Gen, Regional Load

Outage: Griffith-Peacock & Davis-McConnico 230kV Lines

MW/% rate

C:upslf16MyPSLF iver1-na

Rating = 2

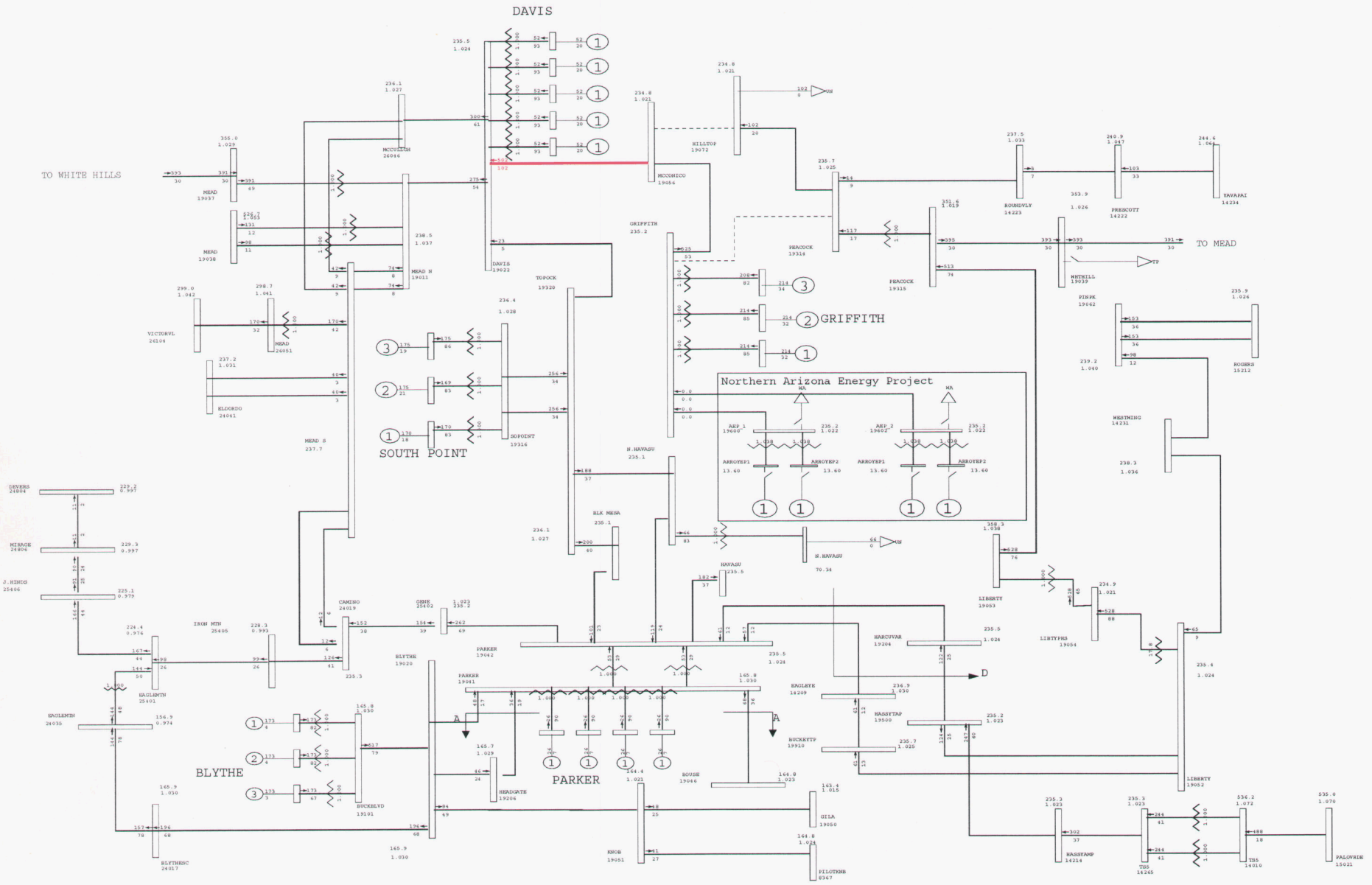

General Electric International, Inc. PSLF Program Thu Jul 19 15:26:59 2007 C:upslf16MyPSLF 8ha_pre_max-rev1.sav

	2008 HEAVY AUTUMN, NORTHERN ARIZONA ENERGY PROJECT, PRE-PROJECT CASE: 08ha_pre_max-rev1.sav EOR=9300MW, Maximum WAPA-DSW Generation Modeled.	Plot 25 - 2008 Heavy Autumn - Before Project, max WAPA Gen Outage: Griffith-Peacock & Hilltop-McConnico 230kV Lines	MW/% rate C:upslf16MyPSLF iver2-na Rating = 2

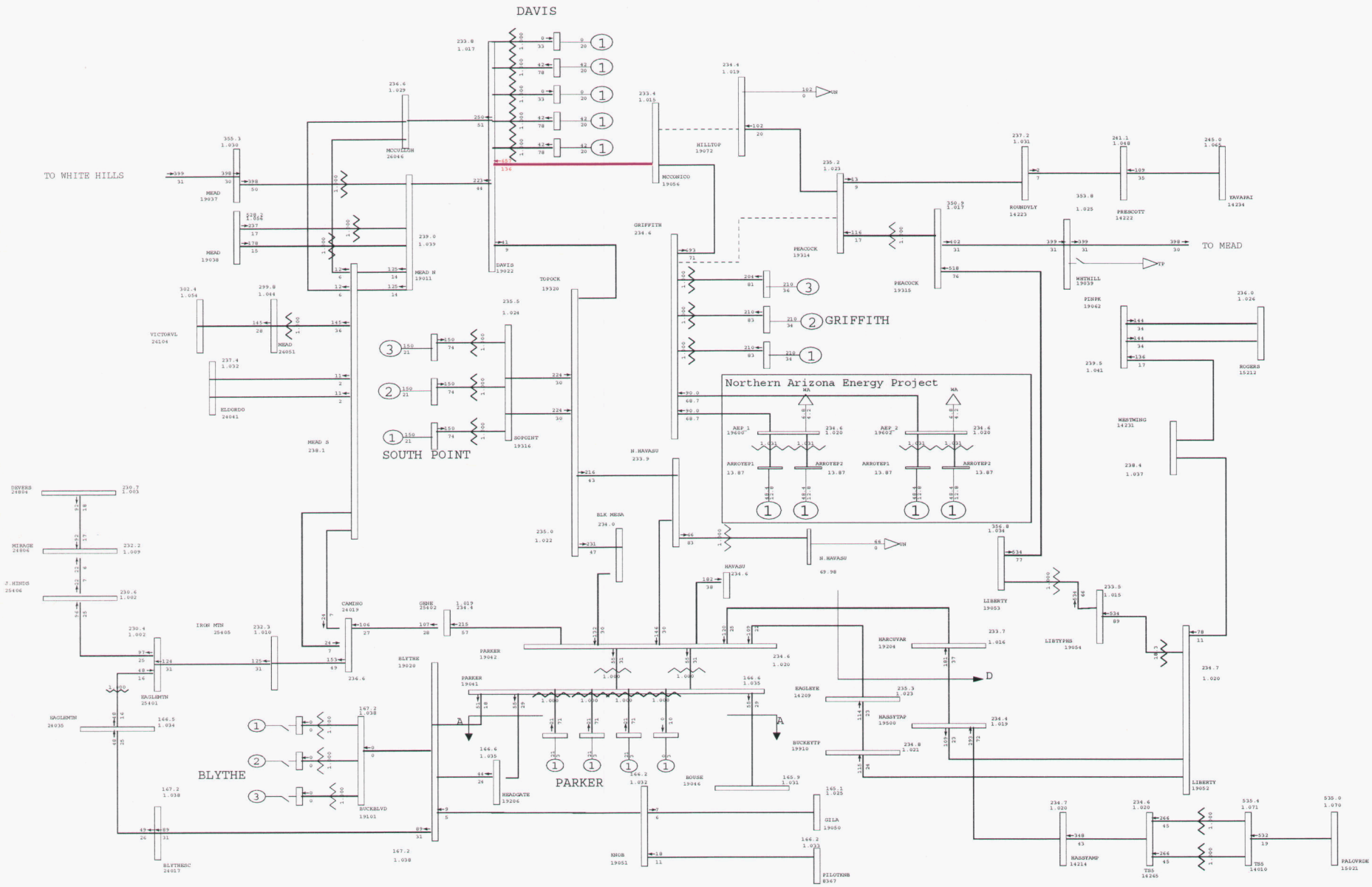

General Electric International, Inc. PSLF Program Thu Jul 19 15:17:45 2007 C:upslf16MyPSLF 8ha_pst_AI-rev1.sav

	2008 HEAVY AUTUMN, NORTHERN ARIZONA ENERGY PROJECT, POST-PROJECT - Area Interch CASE: 08ha_pst_AI-rev1.sav EOR=9300MW, Minimum WAPA-DSW Generation Modeled.	Plot 14 - 2008 Heavy Autumn - After Project, min WAPA Gen, Area Interchange Outage: Griffith-Peacock & Hilltop-McConnico 230kV Lines	MW/% rate C:upslf16MyPSLF iver2-na Rating = 2

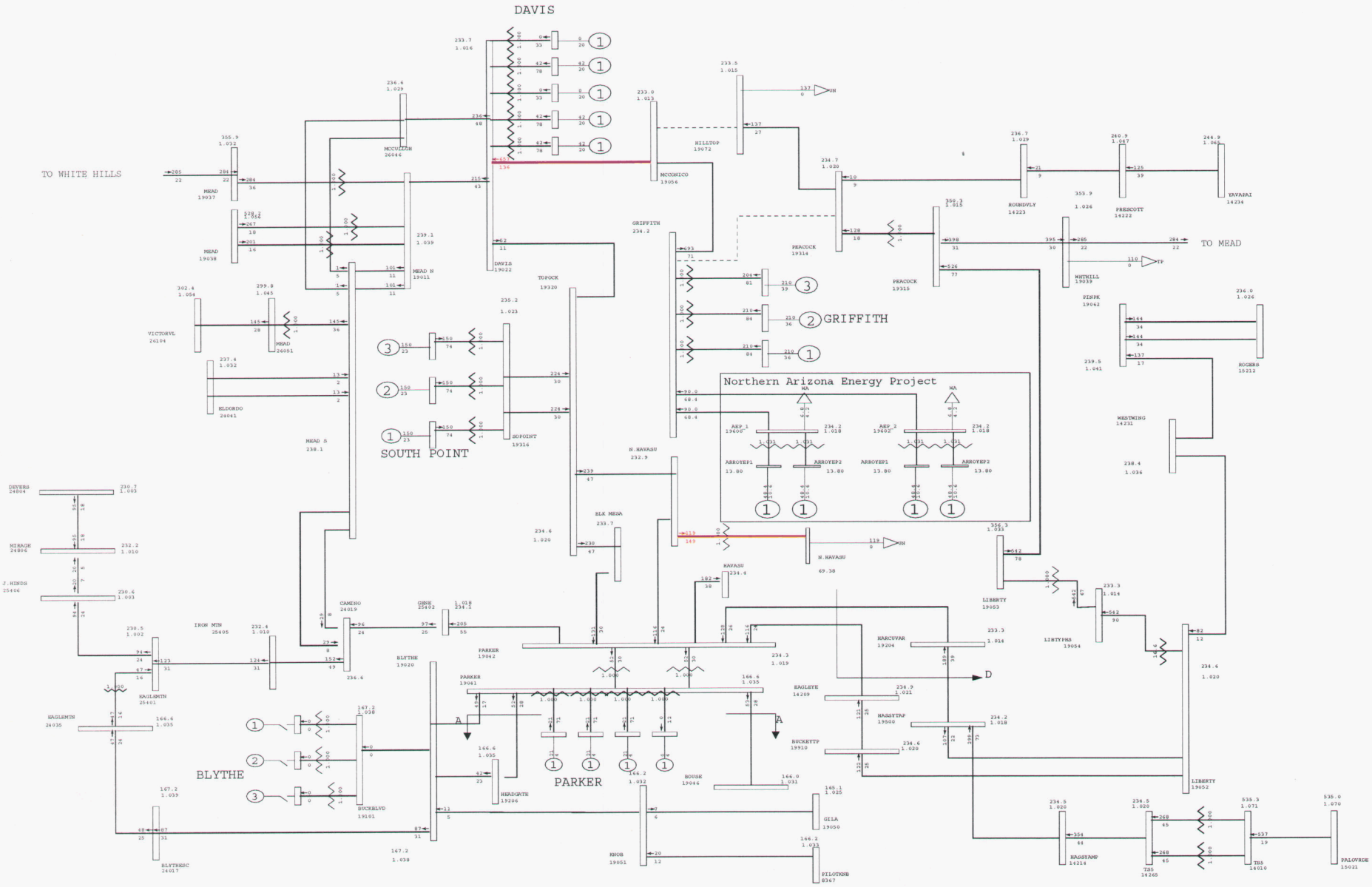

General Electric International, Inc. PSLF Program Thu Jul 19 15:17:47 2007 C:upslf16MyPSLF 8ha_pst_LD-rev1.sav

2008 HEAVY AUTUMN, NORTHERN ARIZONA ENERGY PROJECT, POST-PROJECT - UNS Load Inc CASE: 08ha_pst_LD-rev1.sav EOR=9300MW, Minimum WAPA-DSW Generation Modeled.	Plot 15 - 2008 Heavy Autumn - After Project, min WAPA Gen, Regional Load Outage: Griffith-Peacock & Hilltop-McConnico 230kV Lines	MW/% rate C:upslf16MyPSLF iver2-na Rating = 2

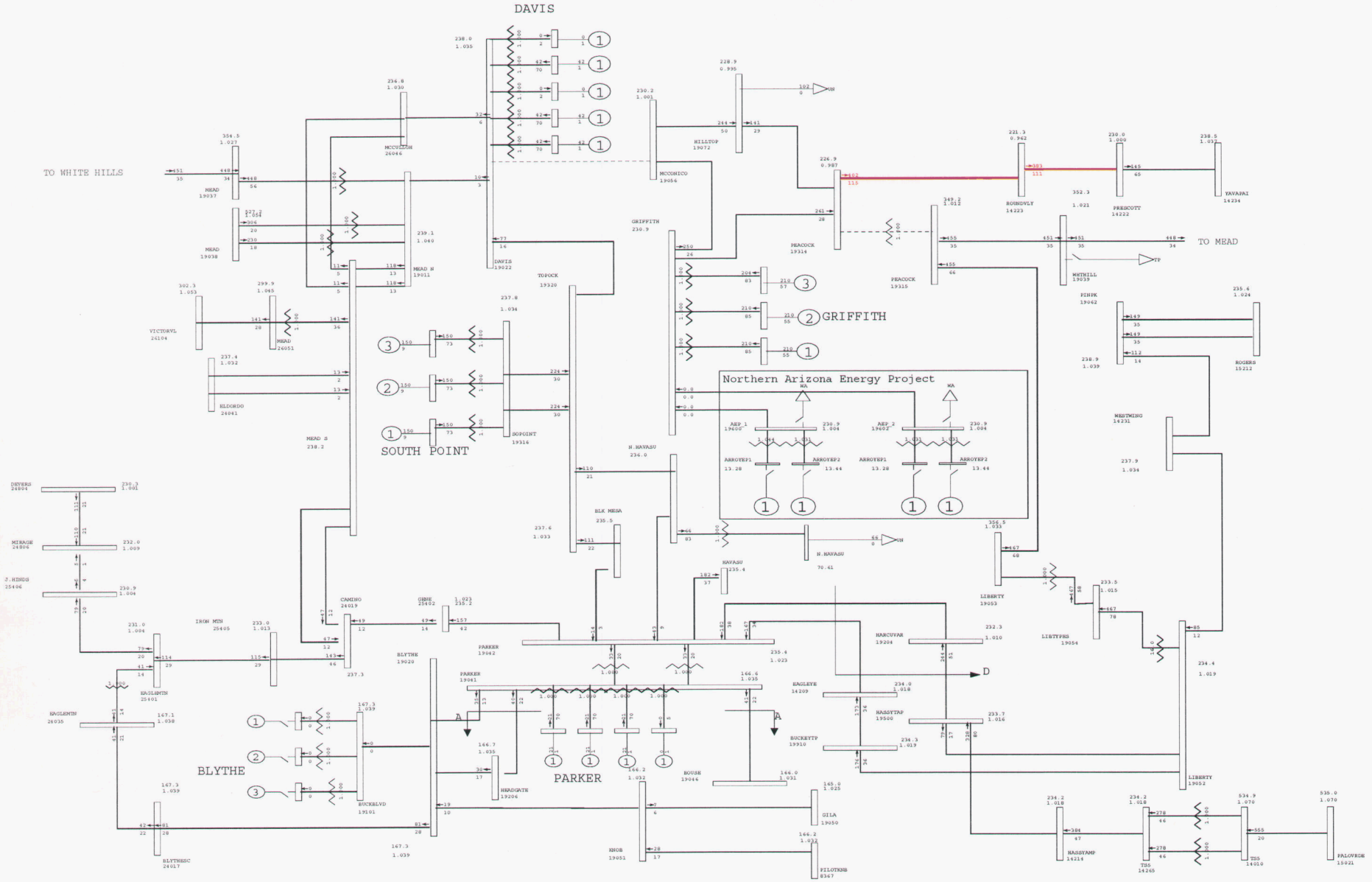

General Electric International, Inc. PSLF Program Thu Jul 19 15:17:50 2007 C:upslf16MyPSLF 8ha_pre-rev1.sav

	2008 HEAVY AUTUMN, NORTHERN ARIZONA ENERGY PROJECT, PRE-PROJECT CASE: 08ha_pre-rev1.sav EOR=9300MW, Min WAPA-DSW Generation Modeled.	Plot 16 - 2008 Heavy Autumn - Before Project, min WAPA Gen Outage: Peacock 345/230 Tran & Davis-McConico 230kV Line	MW/% rate C:upslf16MyPSLF iver2-na Rating = 2

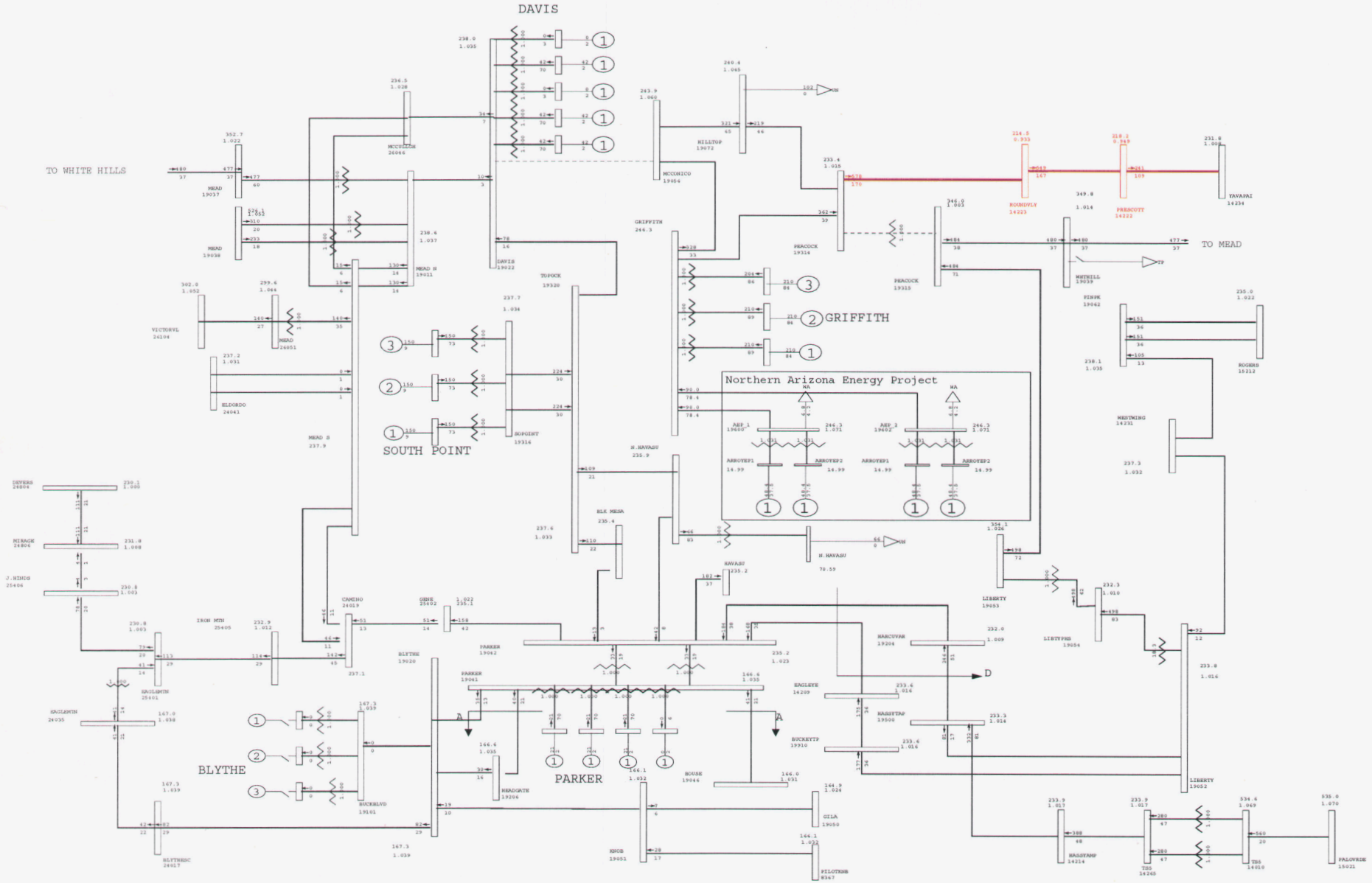

General Electric International, Inc. PSLF Program Thu Jul 19 15:17:53 2007 C:upslf16MyPSLF 8ha_pst_AI-rev1.sav

2008 HEAVY AUTUMN, NORTHERN ARIZONA ENERGY PROJECT, POST-PROJECT - Area Interch CASE: 08ha_pst_AI-rev1.sav EOR=9300MW, Minimum WAPA-DSW Generation Modeled.	Plot 17 - 2008 Heavy Autumn - After Project, min WAPA Gen, Area Interchange Outage: Peacock 345/230 Tran & Davis-McConnico 230kV Line	MW/% rate C:upslf16MyPSLF iver2-na Rating = 2

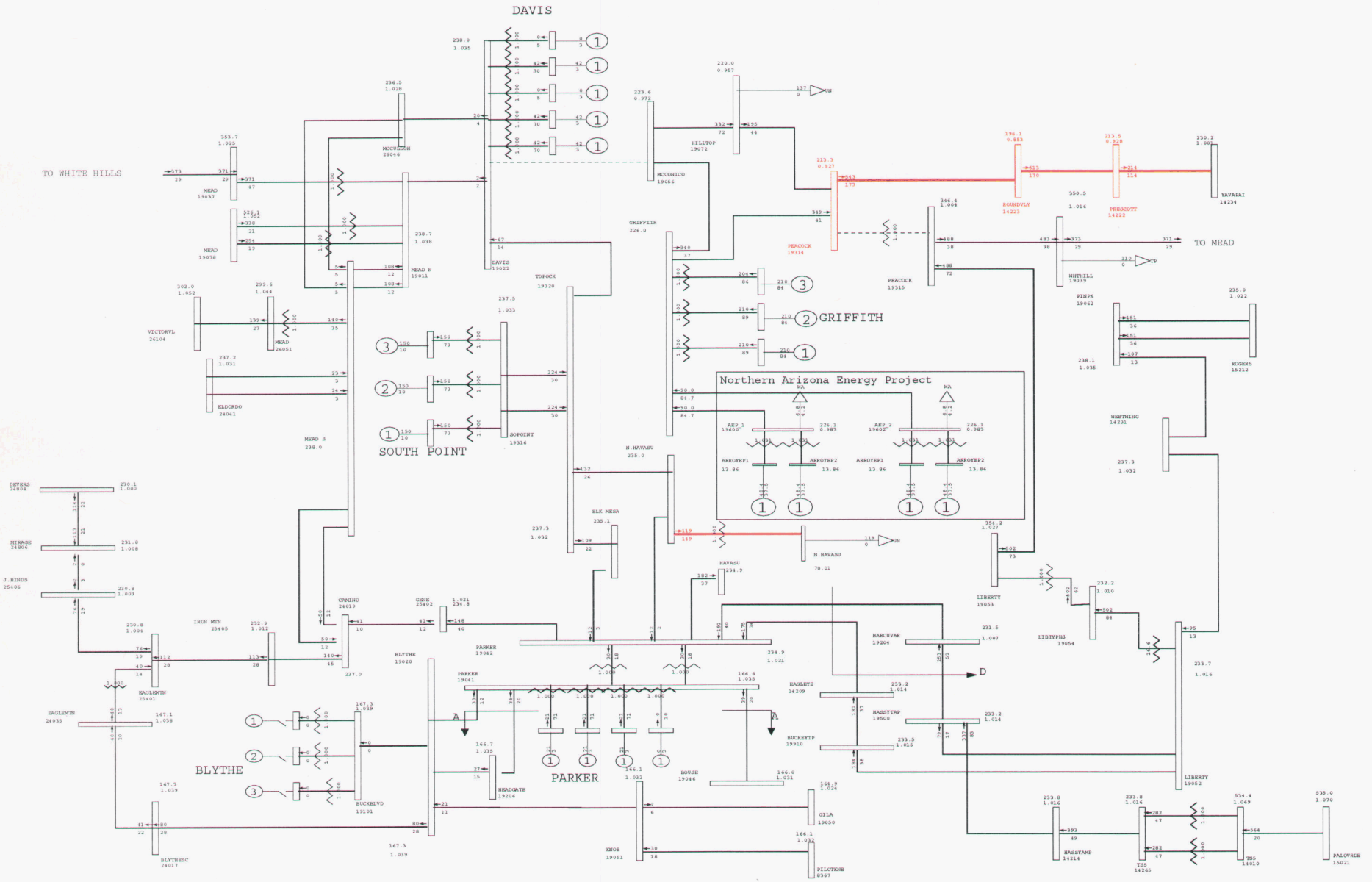

General Electric International, Inc. PSLF Program Thu Jul 19 15:17:58 2007 C:upslf16MyPSLF 8ha_pst_LD-rev1.sav

	2008 HEAVY AUTUMN, NORTHERN ARIZONA ENERGY PROJECT, POST-PROJECT - UNS Load Inc CASE: 08ha_pst_LD-rev1.sav EOR=9300MW, Minimum WAPA-DSW Generation Modeled.	Plot 18 - 2008 Heavy Autumn - After Project, min WAPA Gen, Regional Load Outage: Peacock 345/230 Tran & Davis-McConnico 230kV Line	MW/% rate C:upslf16MyPSLF iver2-na Rating = 2

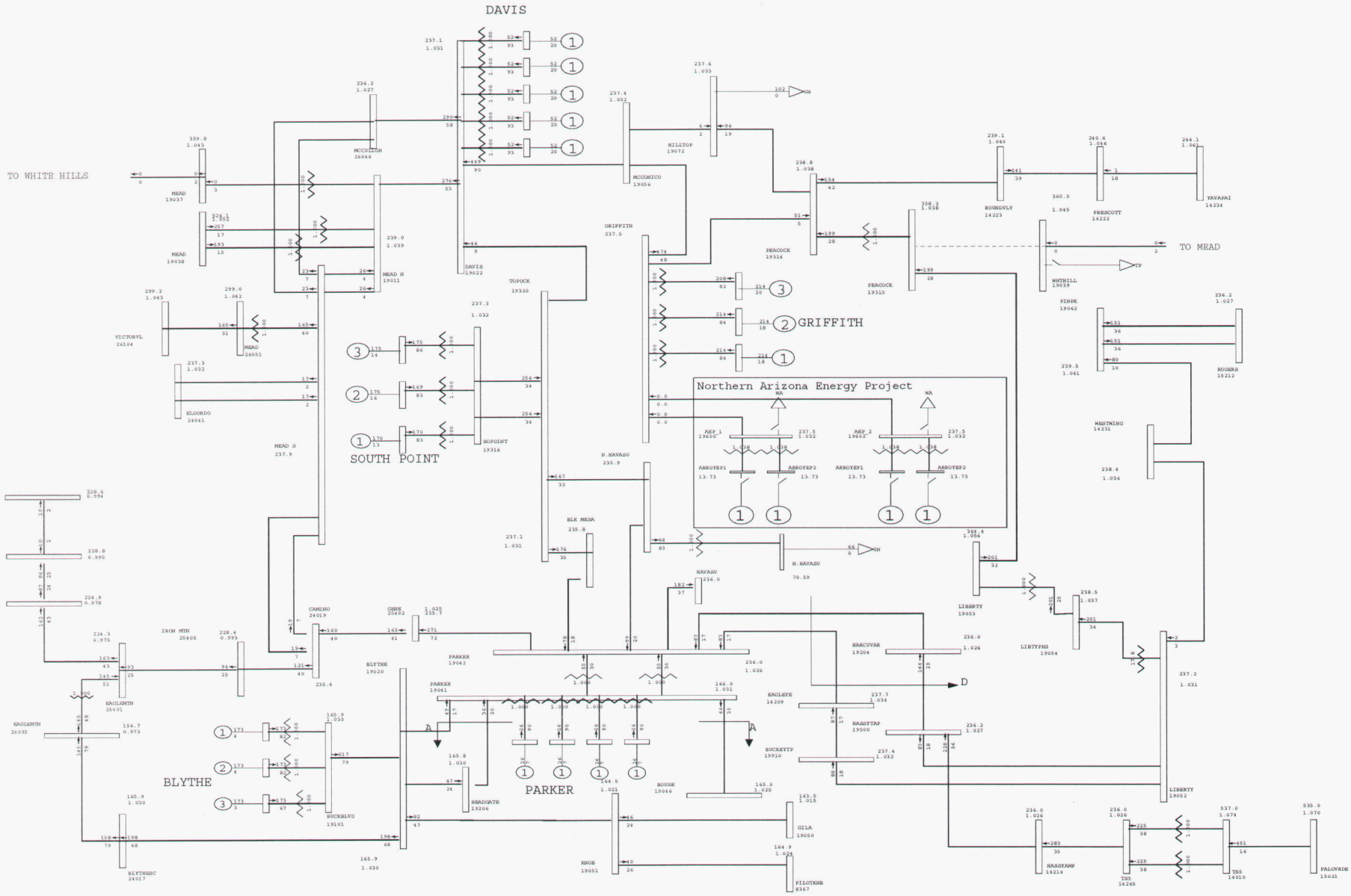

General Electric International, Inc. PSLF Program Thu Jul 19 15:18:00 2007 C:upslf16MyPSLF 8ha_pre_max-rev1.sav

2008 HEAVY AUTUMN, NORTHERN ARIZONA ENERGY PROJECT, PRE-PROJECT CASE: 08ha_pre_max-rev1.sav EOR=9300MW, Maximum WAPA-DSW Generation Modeled.	Plot 19 - 2008 Heavy Autumn - Before Project, max WAPA Gen Outage: Peacock-Mead 345kV Line	MW/% rate C:upslf16MyPSLF iver2-na Rating = 2

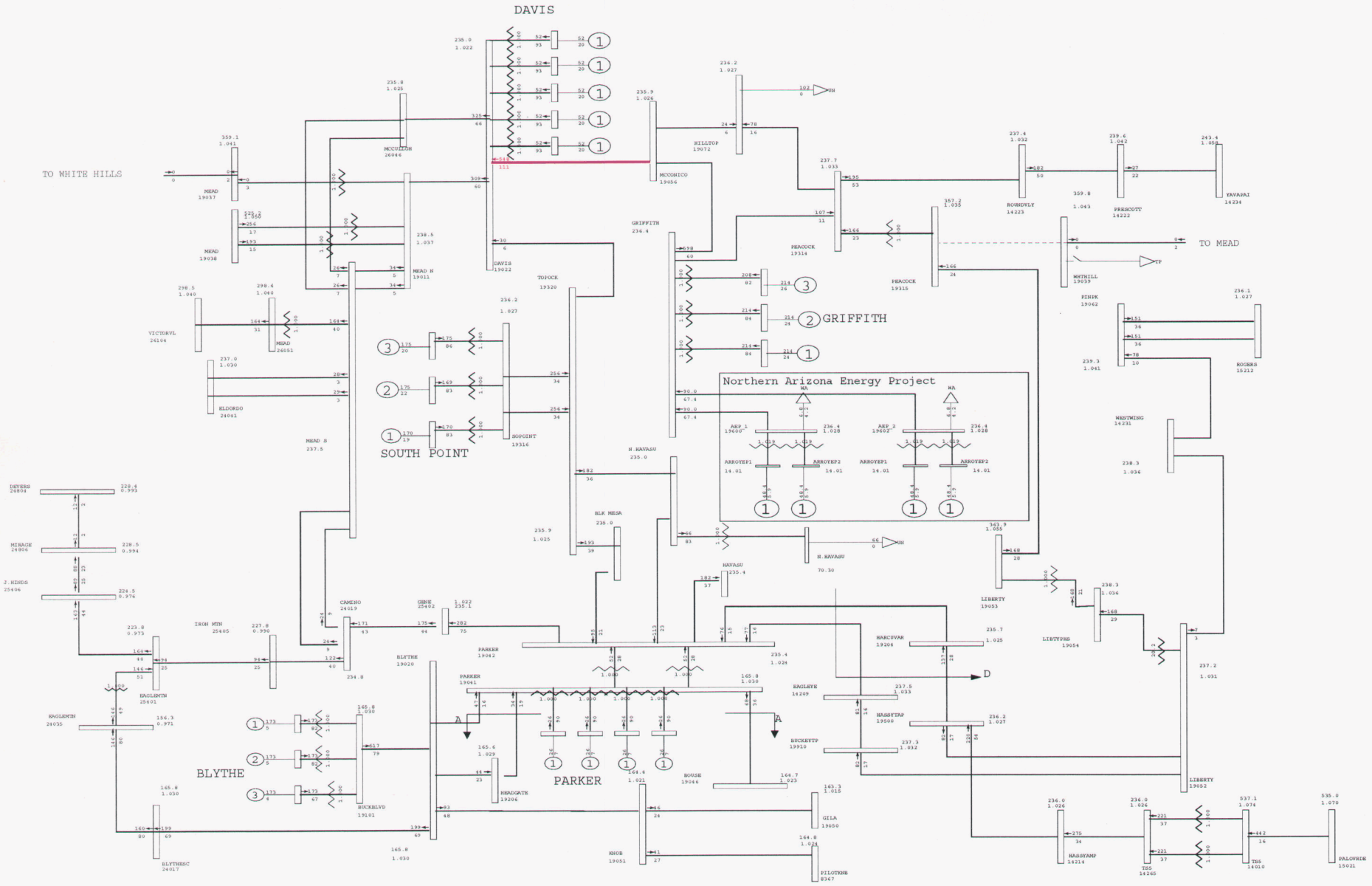

General Electric International, Inc. PSLF Program Thu Jul 19 15:18:02 2007 C:upslf16MyPSLF 8ha_pst_maxAI-rev1.sav

	2008 HEAVY AUTUMN, NORTHERN ARIZONA ENERGY PROJECT, POST-PROJECT - Area Interch CASE: 08ha_pst_maxAI-rev1.sav EOR=9300MW, Maximum WAPA-DSW Generation Modeled.	Plot 20 - 2008 Heavy Autumn - After Project, max WAPA Gen, Area Interchange Outage: Peacock-Mead 345kV Line	MW/% rate C:upslf16MyPSLF iver2-na Rating = 2

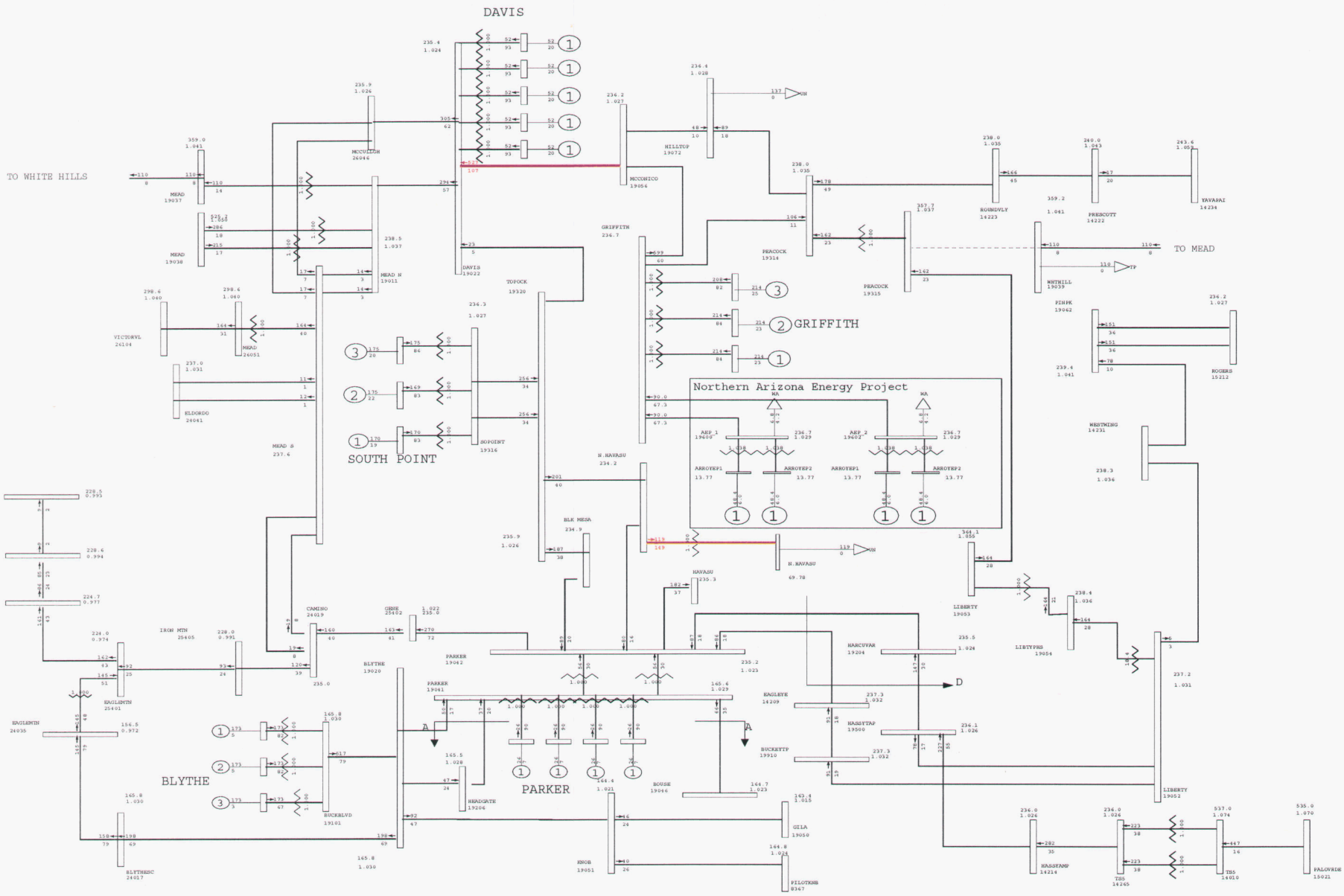

General Electric International, Inc. PSLF Program Thu Jul 19 15:18:04 2007 C:upslf16MyPSLF 8ha_pst_maxLD-rev1.sav

	2008 HEAVY AUTUMN, NORTHERN ARIZONA ENERGY PROJECT, POST-PROJECT - UNS Load Inc CASE: 08ha_pst_maxLD-rev1.sav EOR=9300MW, Maximum WAPA-DSW Generation Modeled.	Plot 21 - 2008 Heavy Autumn - After Project, max WAPA Gen, Regional Load Outage: Peacock-Mead 345kV Line

MW/% rate
C:upslf16MyPSLF iver2-na
Rating = 2

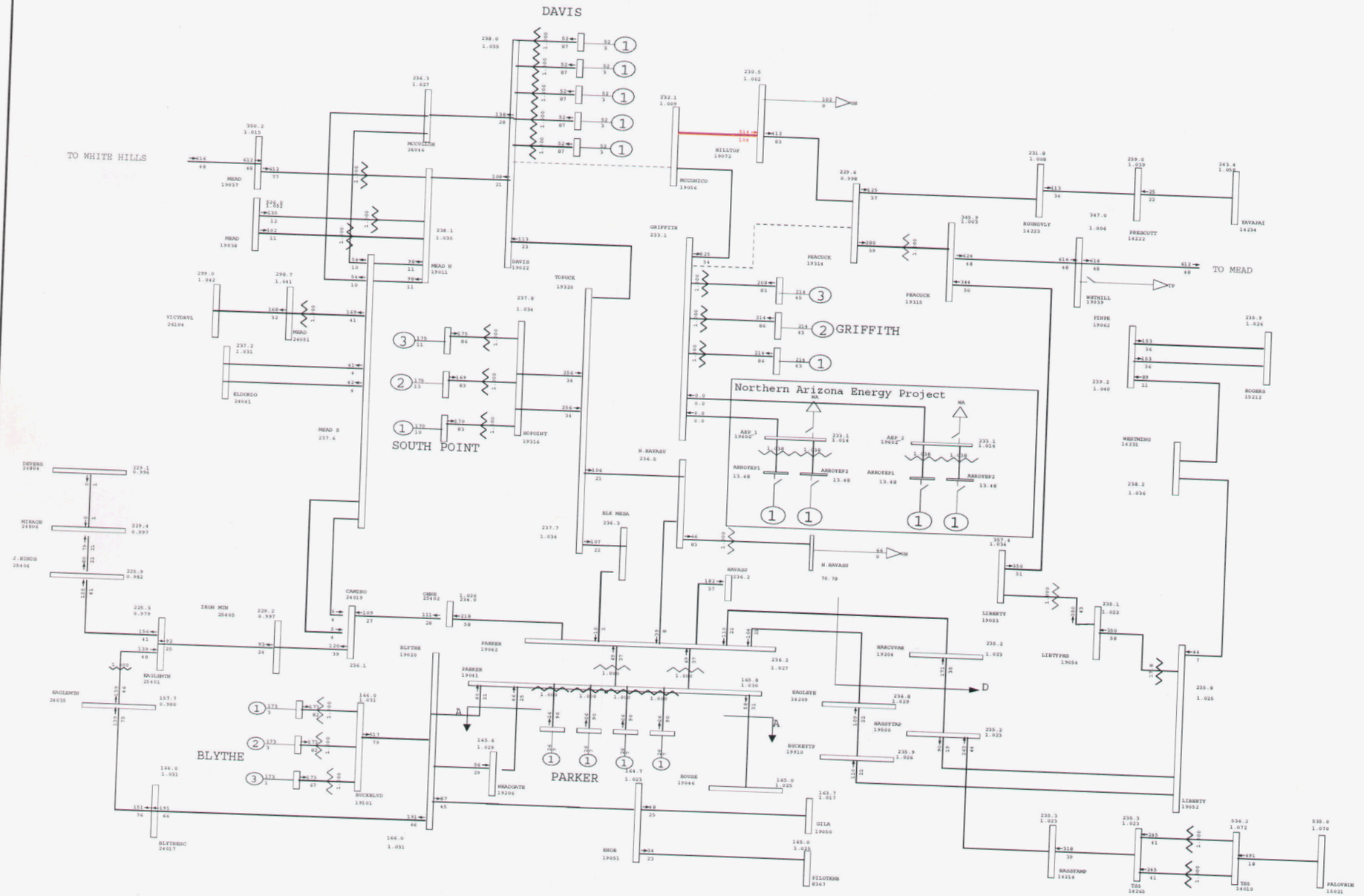

General Electric International, Inc. PSLF Program Thu Jul 19 15:18:06 2007 C:upslf16MyPSLF 8ha_pre_max-rev1.sav

2008 HEAVY AUTUMN, NORTHERN ARIZONA ENERGY PROJECT, PRE-PROJECT

CASE: 08ha_pre_max-rev1.sav

EOR=9300MW, Maximum WAPA-DSW Generation Modeled.

Plot 22 - 2008 Heavy Autumn - Before Project, max WAPA Gen

Outage: Griffith-Peacock & Davis-McConnico 230kV Lines

MW/% rate

C:upslf16MyPSLF iver2-na

Rating = 2

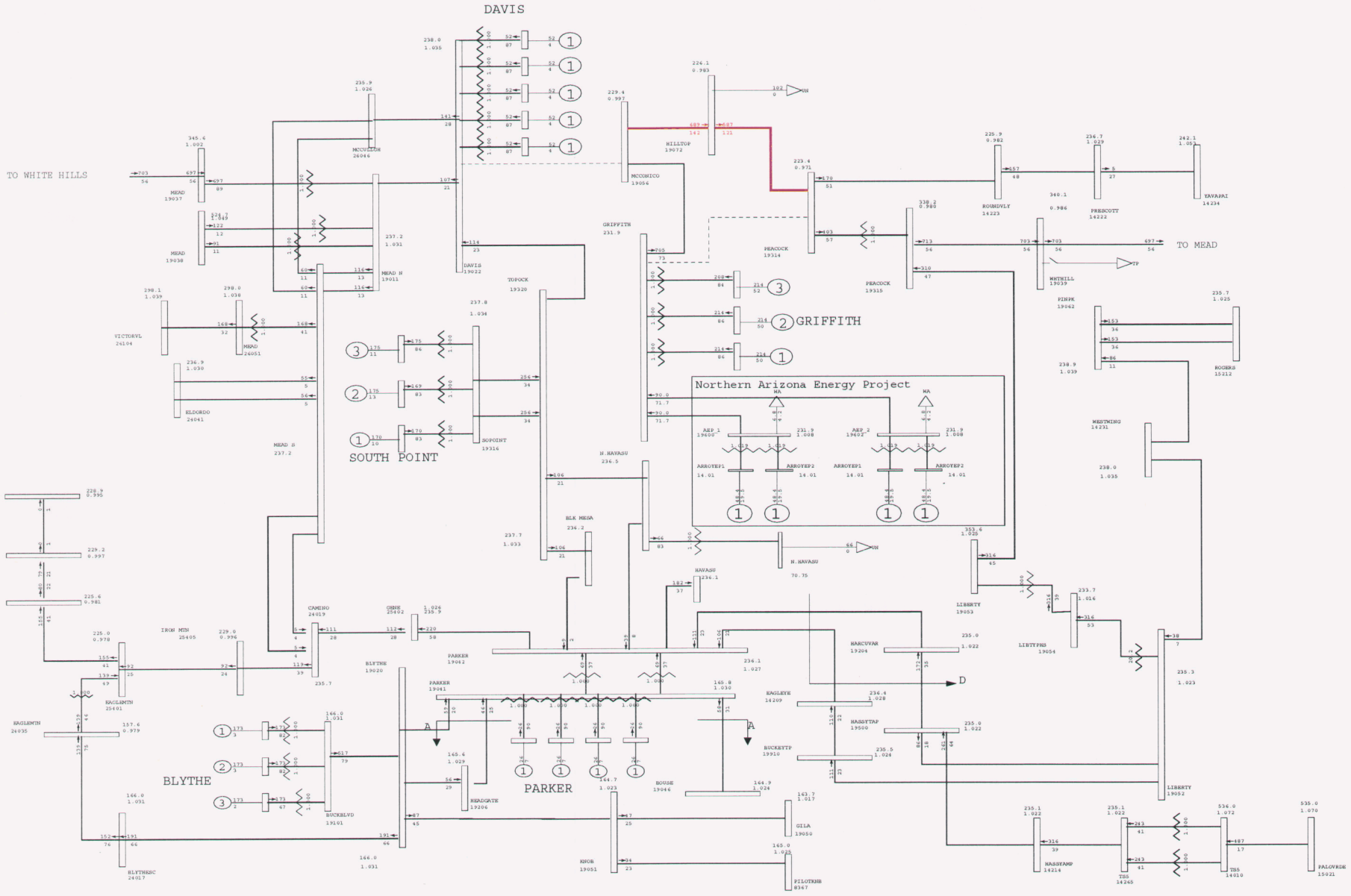

General Electric International, Inc. PSLF Program Thu Jul 19 15:18:10 2007 C:upslf16MyPSLF 8ha_pst_maxAI-rev1.sav

2008 HEAVY AUTUMN, NORTHERN ARIZONA ENERGY PROJECT, POST-PROJECT - Area Interch CASE: 08ha_pst_maxAI-rev1.sav EOR=9300MW, Maximum WAPA-DSW Generation Modeled.	Plot 23 - 2008 Heavy Autumn - After Project, max WAPA Gen, Area Interchange Outage: Griffith-Peacock & Davis-McConnico 230kV Lines	MW/% rate C:upslf16MyPSLF iver2-na Rating = 2

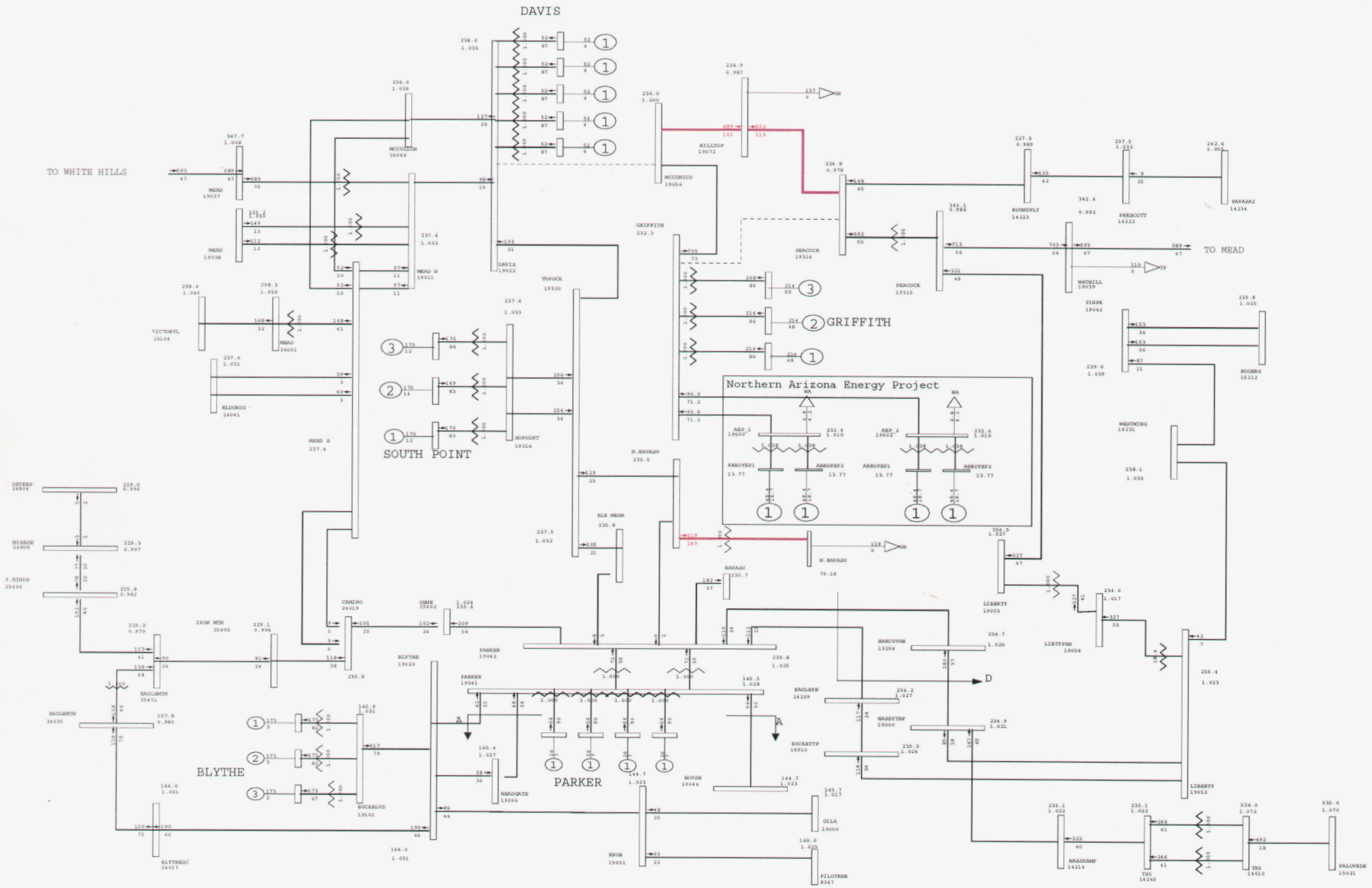

General Electric International, Inc. PSLF Program Thu Jul 19 15:18:13 2007 C:upslf16MyPSLF 8ha_pst_maxLD-rev1.sav

2008 HEAVY AUTUMN, NORTHERN ARIZONA ENERGY PROJECT, POST-PROJECT - UNS Load Inc CASE: 08ha_pst_maxLD-rev1.sav EOR=9300MW, Maximum WAPA-DSW Generation Modeled.	Plot 24 - 2008 Heavy Autumn - After Project, max WAPA Gen, Regional Load Outage: Griffith-Peacock & Davis-McConnico 230kV Lines	MW/% rate C:upslf16MyPSLF iver2-na Rating = 2

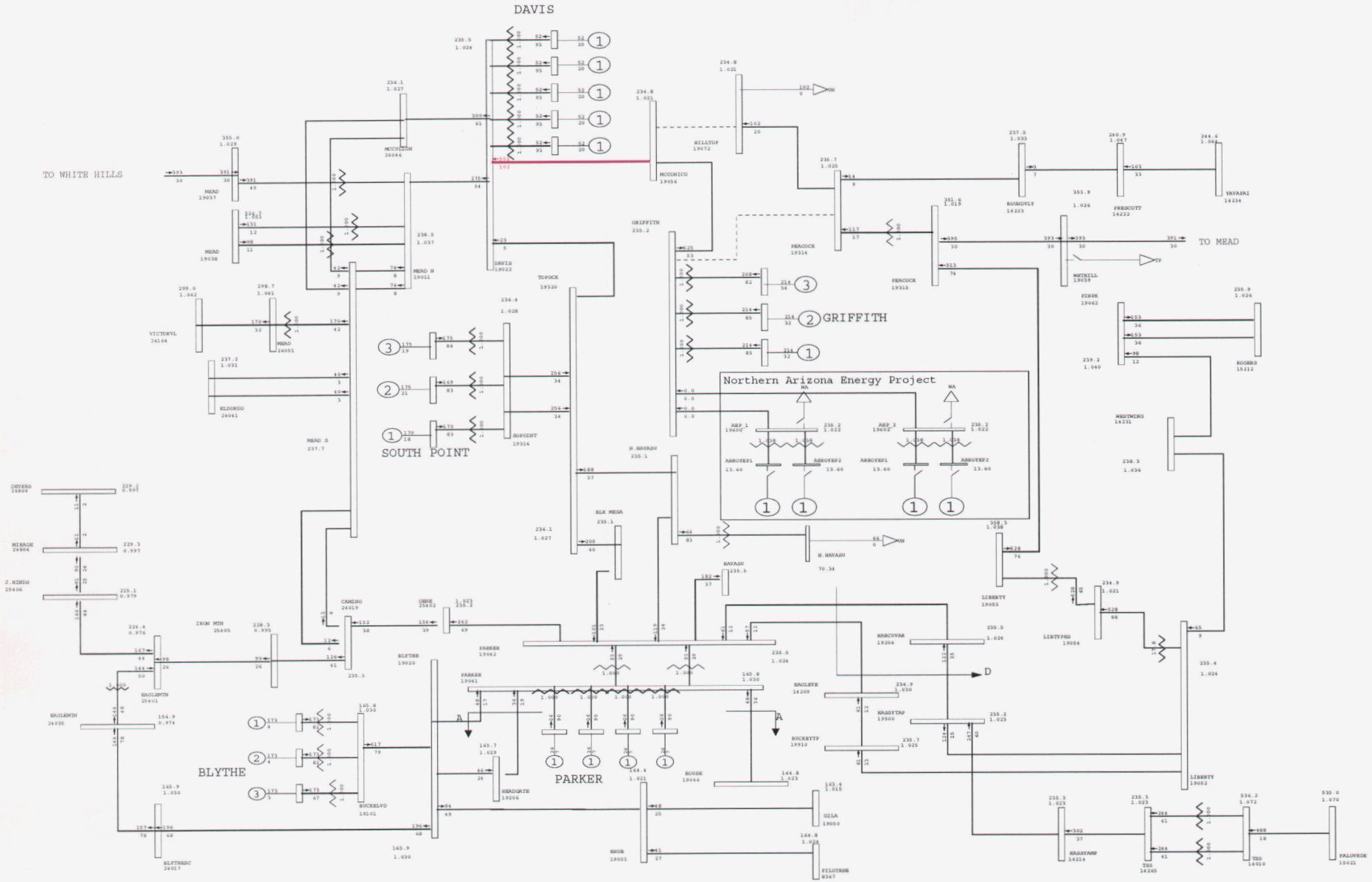

General Electric International, Inc. PSLF Program Thu Jul 19 15:28:15 2007 C:upslf16MyPSLF 8ha_pre_max-rev1.sav

	2008 HEAVY AUTUMN, NORTHERN ARIZONA ENERGY PROJECT, PRE-PROJECT CASE: 08ha_pre_max-rev1.sav EOR=9300MW, Maximum WAPA-DSW Generation Modeled.	Plot 25 - 2008 Heavy Autumn - Before Project, max WAPA Gen Outage: Griffith-Peacock & Hilltop-McConnico 230kV Lines	MW/% rate C:upslf16MyPSLF iver2-na Rating = 2

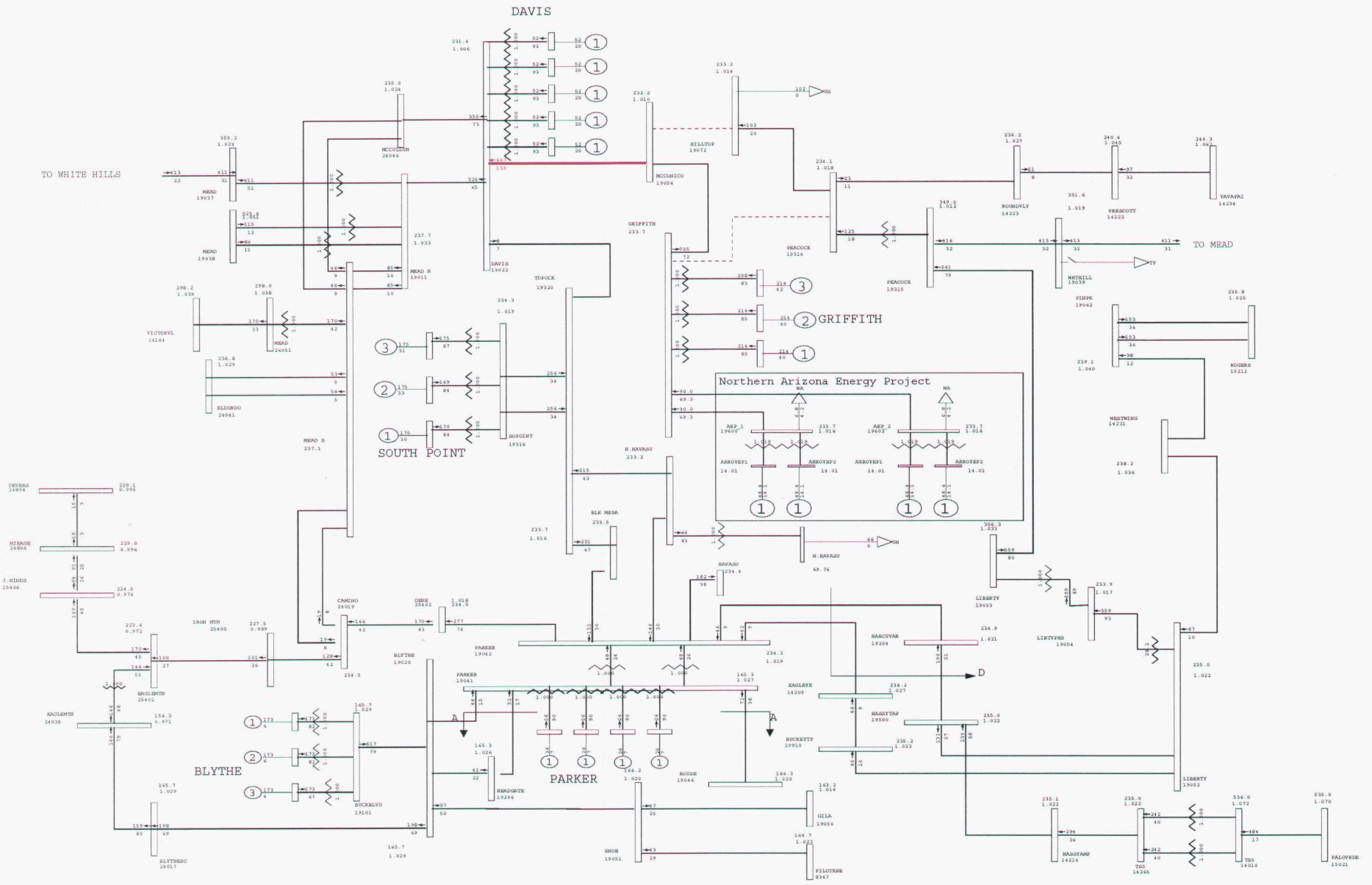
DAVIS
TO WHITE HILLS
MEAD
MEAD
MEAD
MCCULLGH
MEAD N
DAVIS
HILLTOP
MCCONICO
GRIFFITH
PEACOCK
PEACOCK
ROUNDVLY
PRESCOTT
YAVAPAI
WHTHILL
TO MEAD
PINPK
ROGERS
TOPOCK
GRIFFITH
SOPOINT
SOUTH POINT
VICTORVL
MEAD
ELDORDO
MEAD S
Northern Arizona Energy Project
AEP_1
AEP_2
ARROYEP1
ARROYEP2
N.HAVASU
BLK MESA
HAVASU
LIBERTY
MEDTWING
HARCUVAR
LIBTYPHS
DEVERS
MIRAGE
J.HINDS
CAMINO
IRON MTN
GENE
PARKER
BLYTHE
EAGLEMTN
EAGLEYE
HASSYTAP
BUCKEYTP
BOUSE
HEADGATE
BUCKBLVD
BLYTHESC
KNOB
GILA
PILOTKNB
HASSYAMP
TS5
PALOVRDE
BLYTHE
PARKER
A
A
D

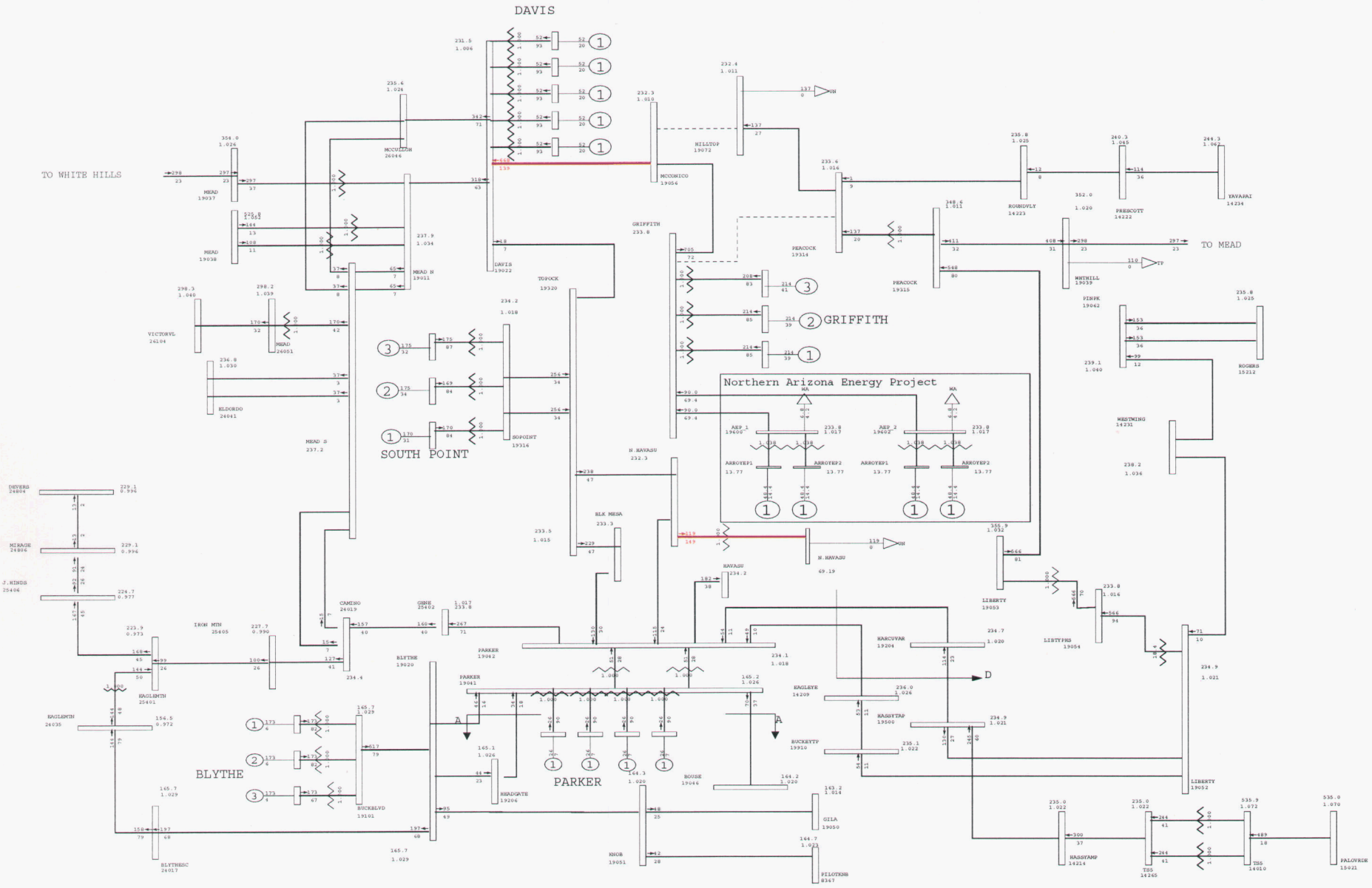
DAVIS
TO WHITE HILLS
MEAD
MCCULLGH
MCCONNICO
HILLTOP
GRIFFITH
PEACOCK
ROUNDVLY
PRESCOTT
YAVAPAI
TO MEAD
WNTHILL
PINPK
ROGERS
MEAD N
DAVIS
TOPOCK
GRIFFITH
SOUTH POINT
SOPOINT
MEAD S
ELDORDO
VICTORVL
MEAD
Northern Arizona Energy Project
AEP_1
AEP_2
ARROYEP1
ARROYEP2
WA
N.HAVASU
BLK MESA
HAVASU
LIBERTY
HARCUVAR
LIBTYPHS
MRSTMING
DEVERS
MIRAGE
J.HINDS
EAGLMTN
IRON MTN
CAMINO
GENE
BLYTHE
PARKER
EAGLEYE
HASSYTAP
BUCKEYTP
BOUSE
HEADGATE
BUCKBLVD
BLYTHESC
GILA
KNOB
PILOTKNB
HASSYAMP
TBS
PALOVRDE
D
A

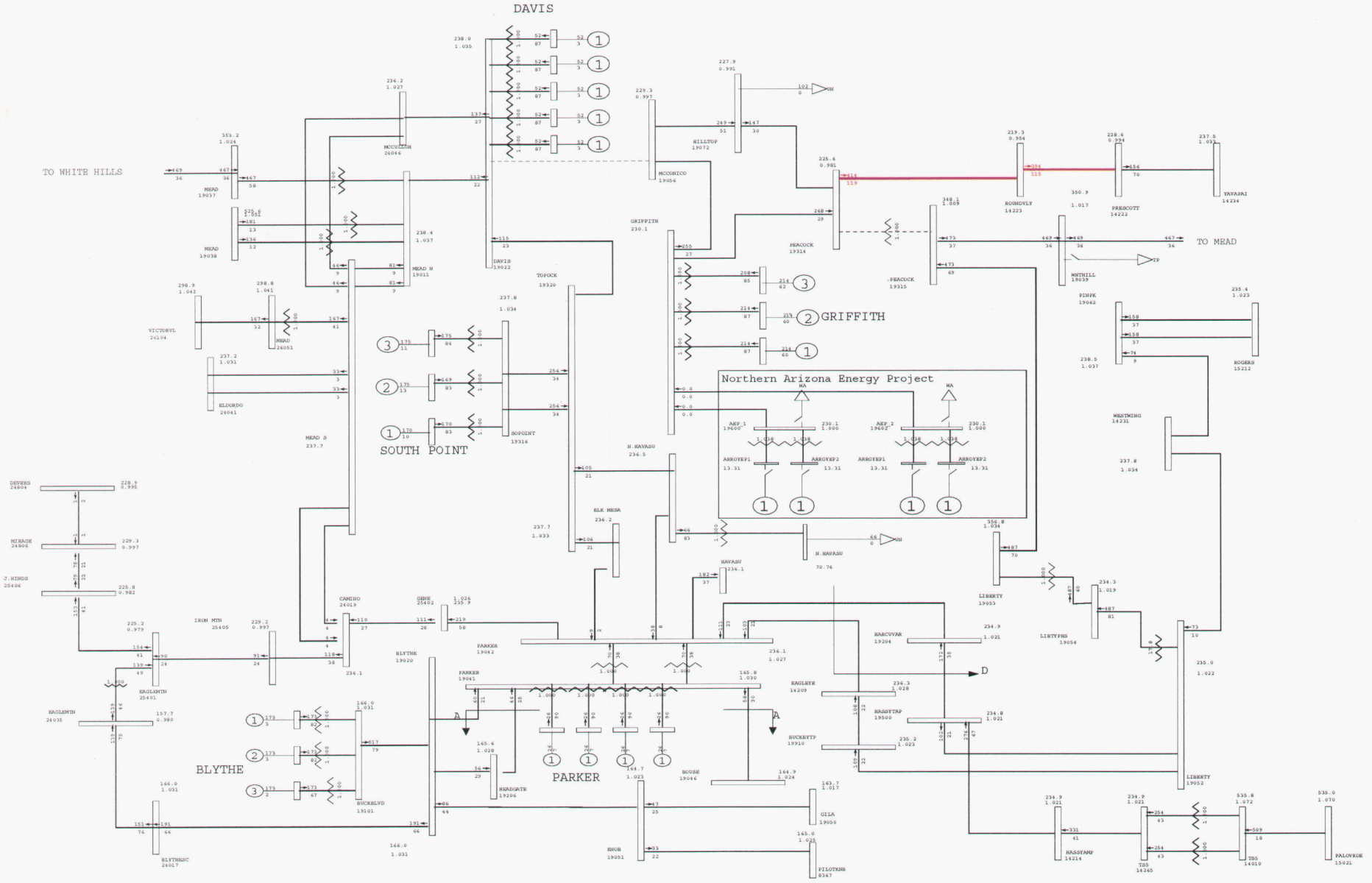

General Electric International, Inc. PSLF Program Thu Jul 19 15:18:22 2007 C:upslf16MyPSLF 8ha_pre_max-rev1.sav

	2008 HEAVY AUTUMN, NORTHERN ARIZONA ENERGY PROJECT, PRE-PROJECT CASE: 08ha_pre_max-rev1.sav EOR=9300MW, Maximum WAPA-DSW Generation Modeled.	Plot 28 - 2008 Heavy Autumn - Before Project, max WAPA Gen Outage: Peacock 345/230 Tran & Davis-McConnico 230kV Line	MW/% rate C:upslf16MyPSLF iver2-na Rating = 2

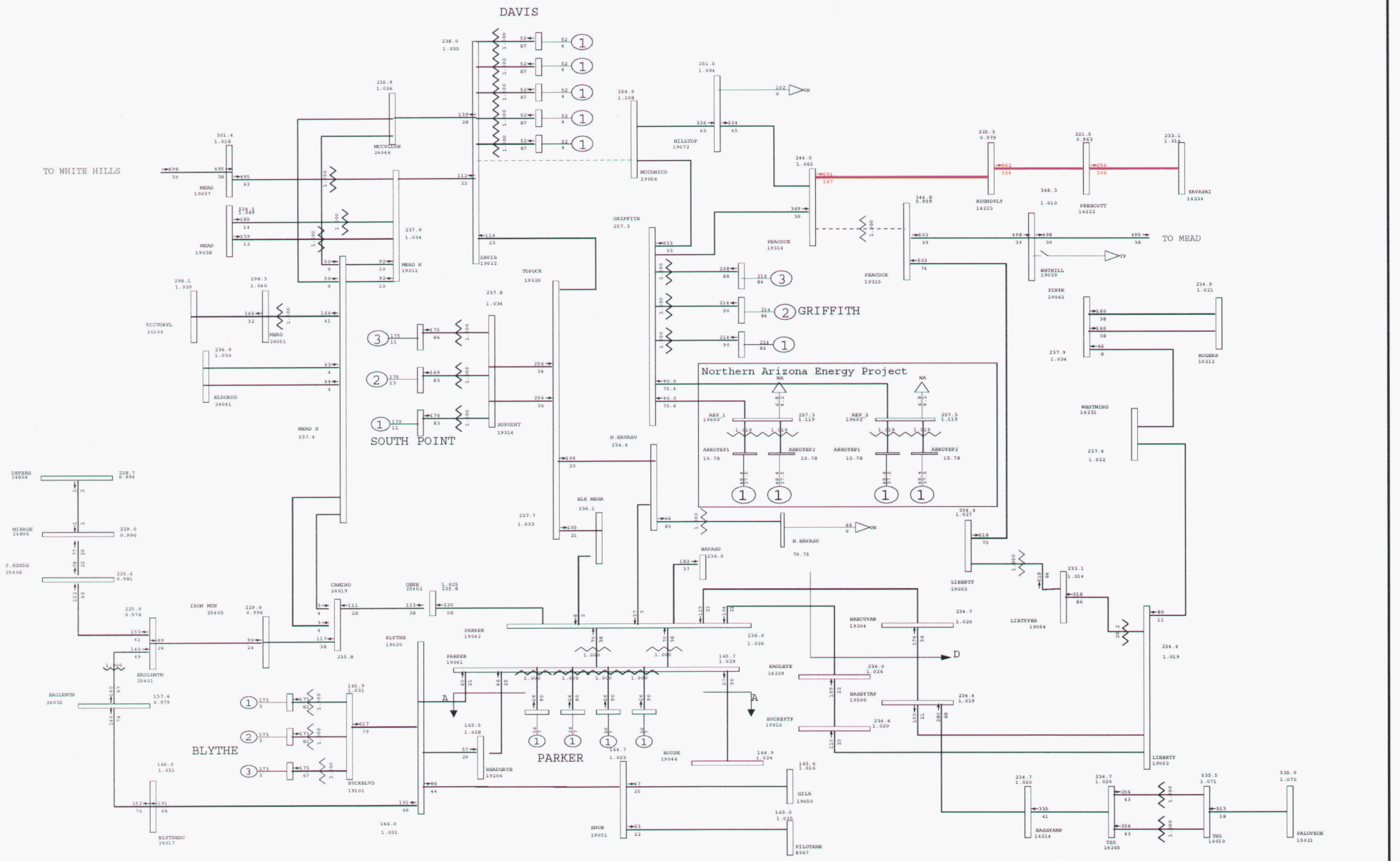
DAVIS
TO WHITE HILLS
MCCULLGH 26046
MEAD 19037
MEAD 19038
MEAD N 19011
DAVIS 19022
MCCONICO 19056
HILLTOP 19072
TOPOCK 19320
GRIFFITH 257.3
PEACOCK 19314
PEACOCK 19315
ROUNDVLY 14223
PRESCOTT 14222
YAVAPAI 14234
TO MEAD
MWHILL 19039
PINPK 19062
ROGERS 15212
WESTWING 14231
GRIFFITH
SOUTH POINT
SOPOINT 19316
MEAD S 237.4
VICTORVL 26104
MEAD 24051
ELDORDO 24041
Northern Arizona Energy Project
AEP_1 19600
AEP_2 19602
ARROYEP1 15.78
ARROYEP2 15.78
N.HAVASU 236.4
BLK MESA 236.1
N.HAVASU
HAVASU 236.0
LIBERTY 19053
LIBERTY
LIBTYPKS 19054
HARCUVAR 19204
HASSYTAP 19500
HASSYAMP 14214
BUCKEYTP 19910
EAGLEYE 14209
D
DENVERS 24804
MIRAGE 24806
J.HINDS 25406
EAGLMTN 25401
EAGLEMTN 24035
IRON MTN 25405
CAMINO 24019
GRDIE 25402
BLYTHE 19020
BLYTHE
BLYTHESC 24017
BUCKBLVD 19101
HEADGATE 19206
PARKER 19042
PARKER 19041
PARKER
BOUSE 19044
GILA 19050
KNOB 19051
PILOTKNB 8367
TBS 14245
TBS 14010
PALOVRDE 15021
A
A

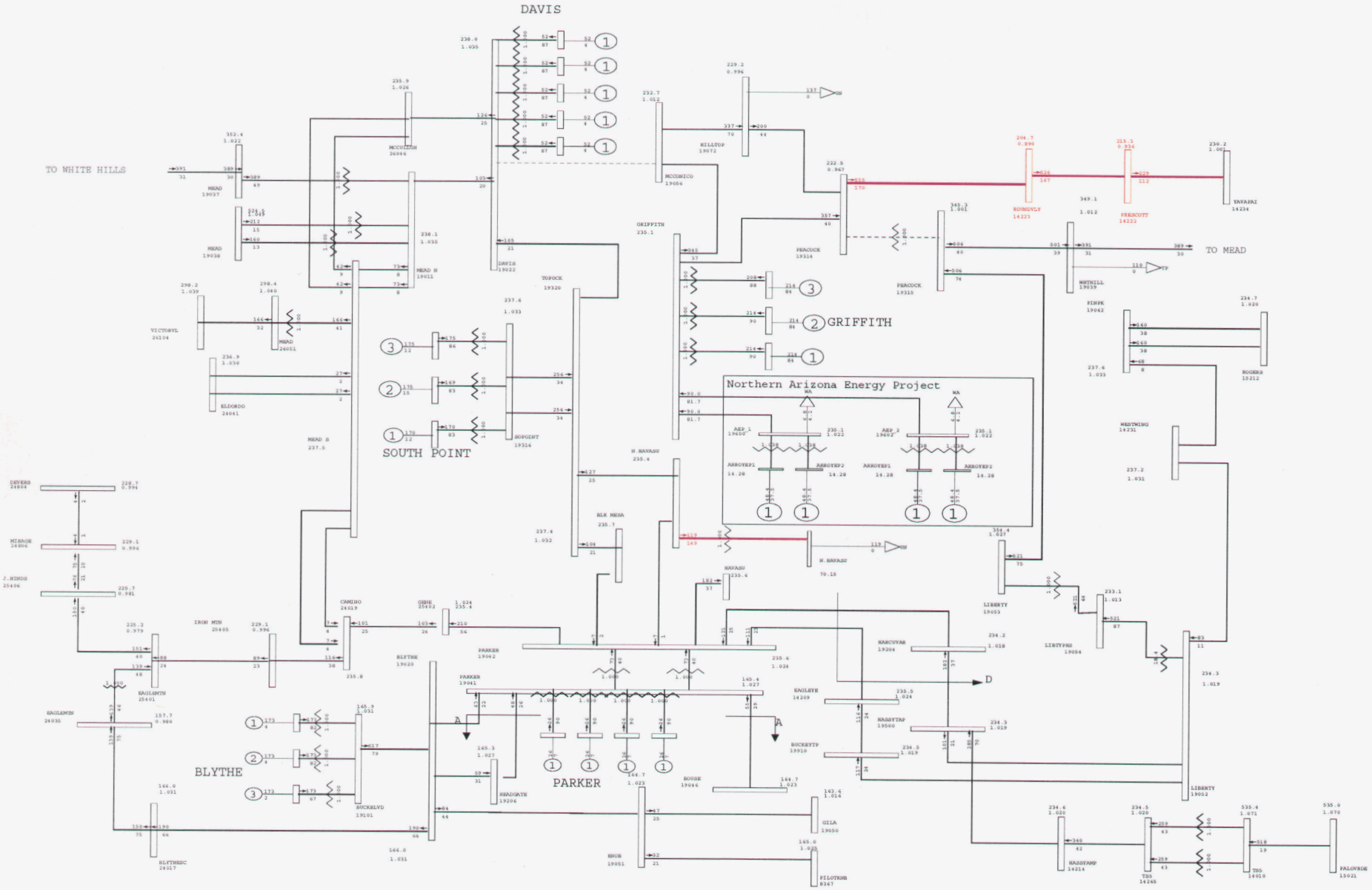

General Electric International, Inc. PSLF Program Thu Jul 19 15:18:30 2007 C:upslf16MyPSLF 8ha_pst_maxLD-rev1.sav

2008 HEAVY AUTUMN, NORTHERN ARIZONA ENERGY PROJECT, POST-PROJECT - UNS Load Inc

CASE: 08ha_pst_maxLD-rev1.sav

EOR=9300MW, Maximum WAPA-DSW Generation Modeled.

Plot 30 - 2008 Heavy Autumn - After Project, max WAPA Gen, Regional Load

Outage: Peacock 345/230 Tran & Davis-McConnico 230kV Line

MW/% rate

C:upslf16MyPSLF iver2-na

Rating = 2

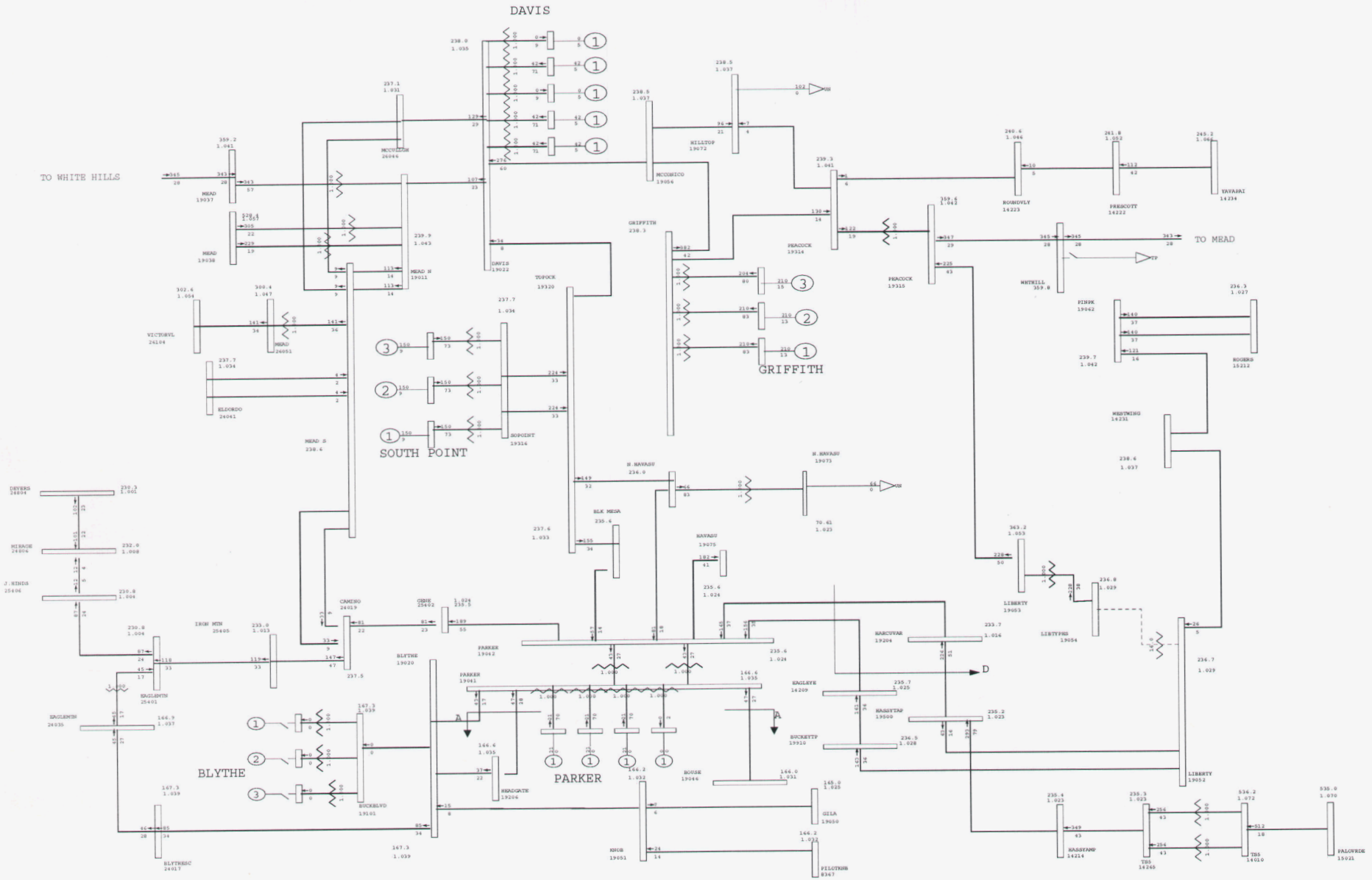

General Electric International, Inc. PSLF Program Thu Jul 19 15:18:33 2007 C:upslf16MyPSLF 8ha_pre-LibBP-rev1.sav

2008 HEAVY AUTUMN, NORTHERN ARIZONA ENERGY PROJECT, PRE-PROJECT

CASE: 08ha_pre-rev1.sav

EOR=9300MW, Min WAPA-DSW Generation Modeled.

Plot 31 - 2008 Heavy Autumn Normal Conditions - Before Project, Minimum WAPA Ge

MW/% rate

C:upslf16MyPSLF iver2.dr

Rating = 1

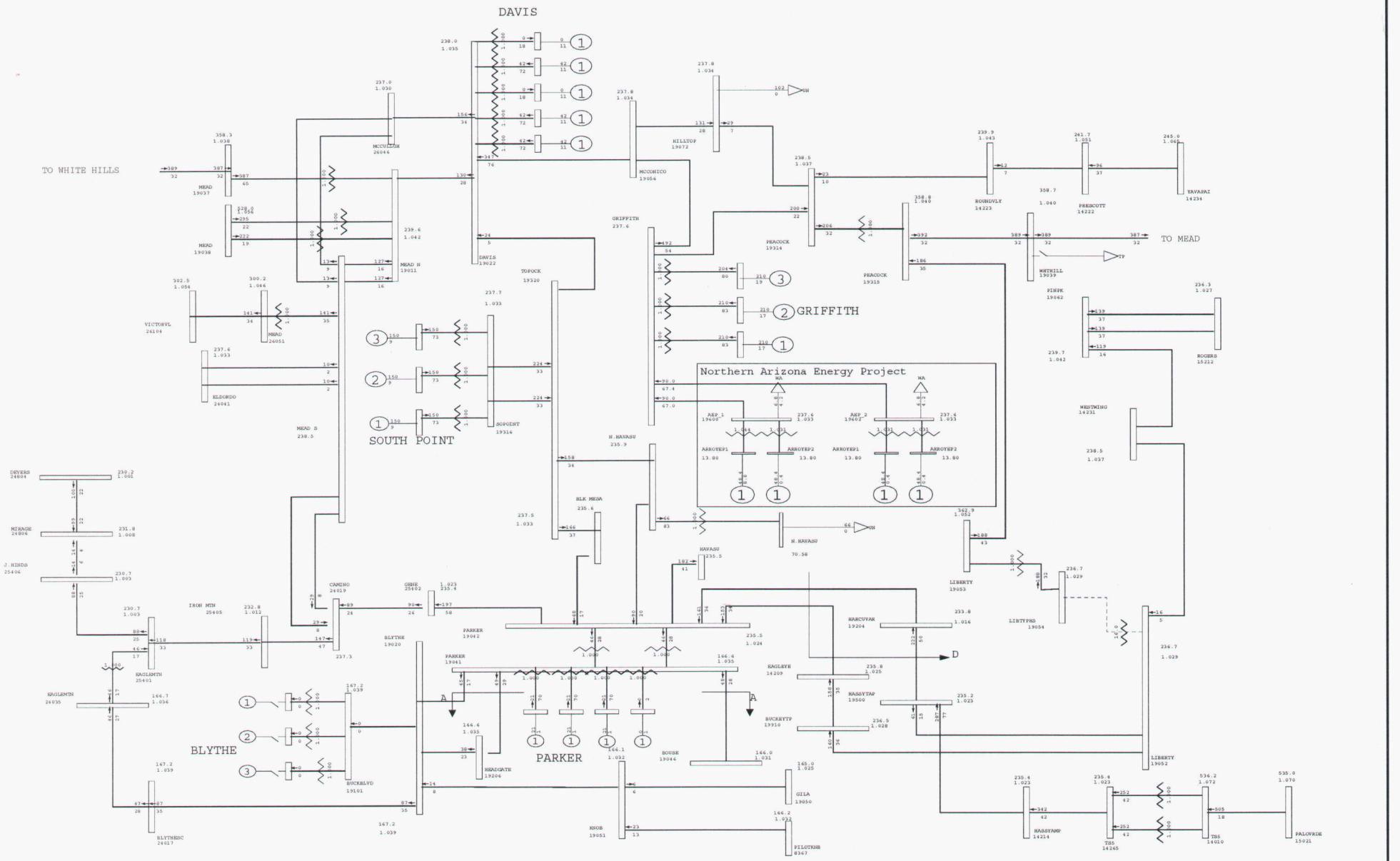
DAVIS
TO WHITE HILLS
MEAD
MCCULLGH
MEAD N
MEAD S
VICTORVL
ELDORDO
SOUTH POINT
SOPOINT
TOPOCK
GRIFFITH
MCONICO
HILLTOP
PEACOCK
ROUNDVLY
PRESCOTT
YAVAPAI
TO MEAD
WHTHILL
PINPK
ROGERS
Northern Arizona Energy Project
AEP_1
AEP_2
ARROYEP1
ARROYEP2
WESTWING
N.HAVASU
HAVASU
BLK MESA
LIBERTY
LIBTYPHS
HARCUVAR
EAGLEYE
HASSYTAP
BUCKEYTP
DEVERS
MIRAGE
J.HINDS
EAGLEMTN
IRON MTN
CAMINO
GENE
BLYTHE
PARKER
BUCKBLVD
HEADGATE
BOUSE
GILA
KNOB
PILOTKNB
BLYTHESC
HASSYAMP
TS5
PALOVRDE

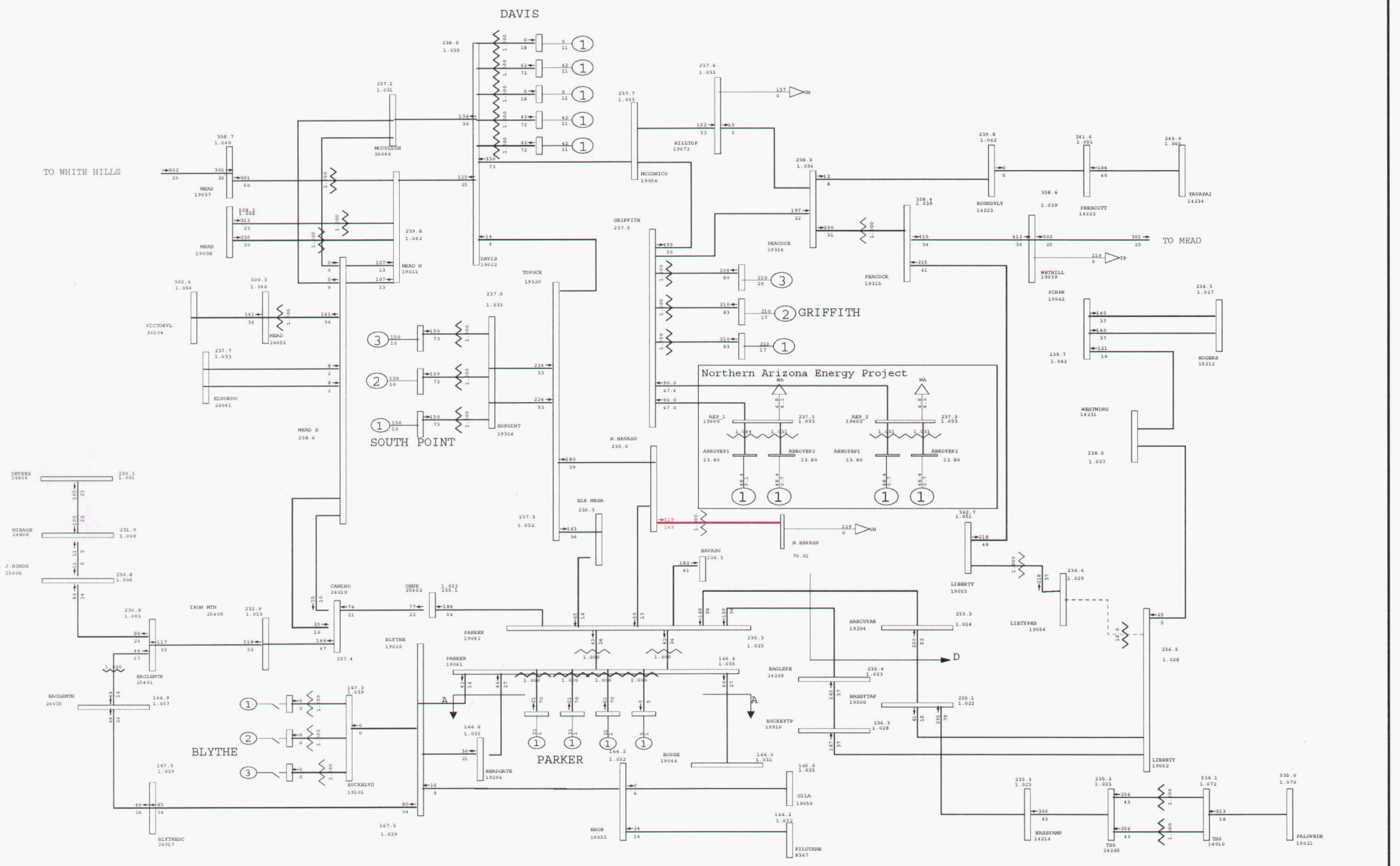

General Electric International, Inc. PSLF Program Thu Jul 19 15:18:36 2007 C:upslf16MyPSLF 8ha_pst_LD-LibBP-rev1.sav

	2008 HEAVY AUTUMN, NORTHERN ARIZONA ENERGY PROJECT, POST-PROJECT - UNS Load Inc CASE: 08ha_pst_LD-LibBP-rev1.sav EOR=9300MW, Minimum WAPA-DSW Generation Modeled.	Plot 33 - 2008 Heavy Autumn Normal Conditions - After Project, Min WAPA Gen, Lo	MW/% rate C:upslf16MyPSLF iver2-na Rating = 1

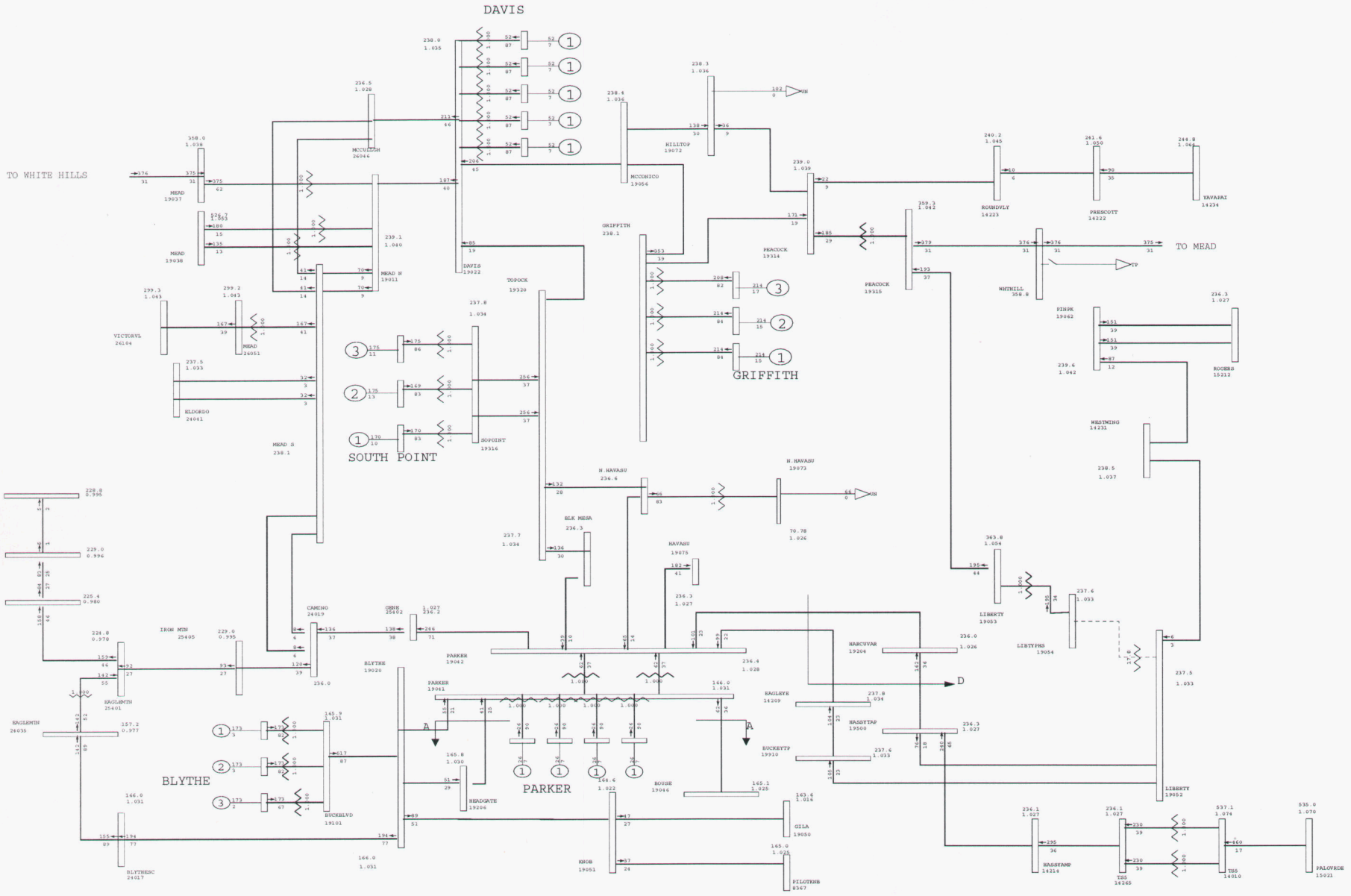

General Electric International, Inc. PSLF Program Thu Jul 19 15:18:38 2007 C:upslf16MyPSLF 8ha_pre_max-LibBP-rev1.sav

	2008 HEAVY AUTUMN, NORTHERN ARIZONA ENERGY PROJECT, PRE-PROJECT CASE: 08ha_pre_max-LibBP-rev1.sav EOR=9300MW, Maximum WAPA-DSW Generation Modeled.	Plot 34 - 2008 Heavy Autumn Normal Conditions - Before Project, Maximum Gen	MW/% rate C:upslf16MyPSLF iver2.dr Rating = 1

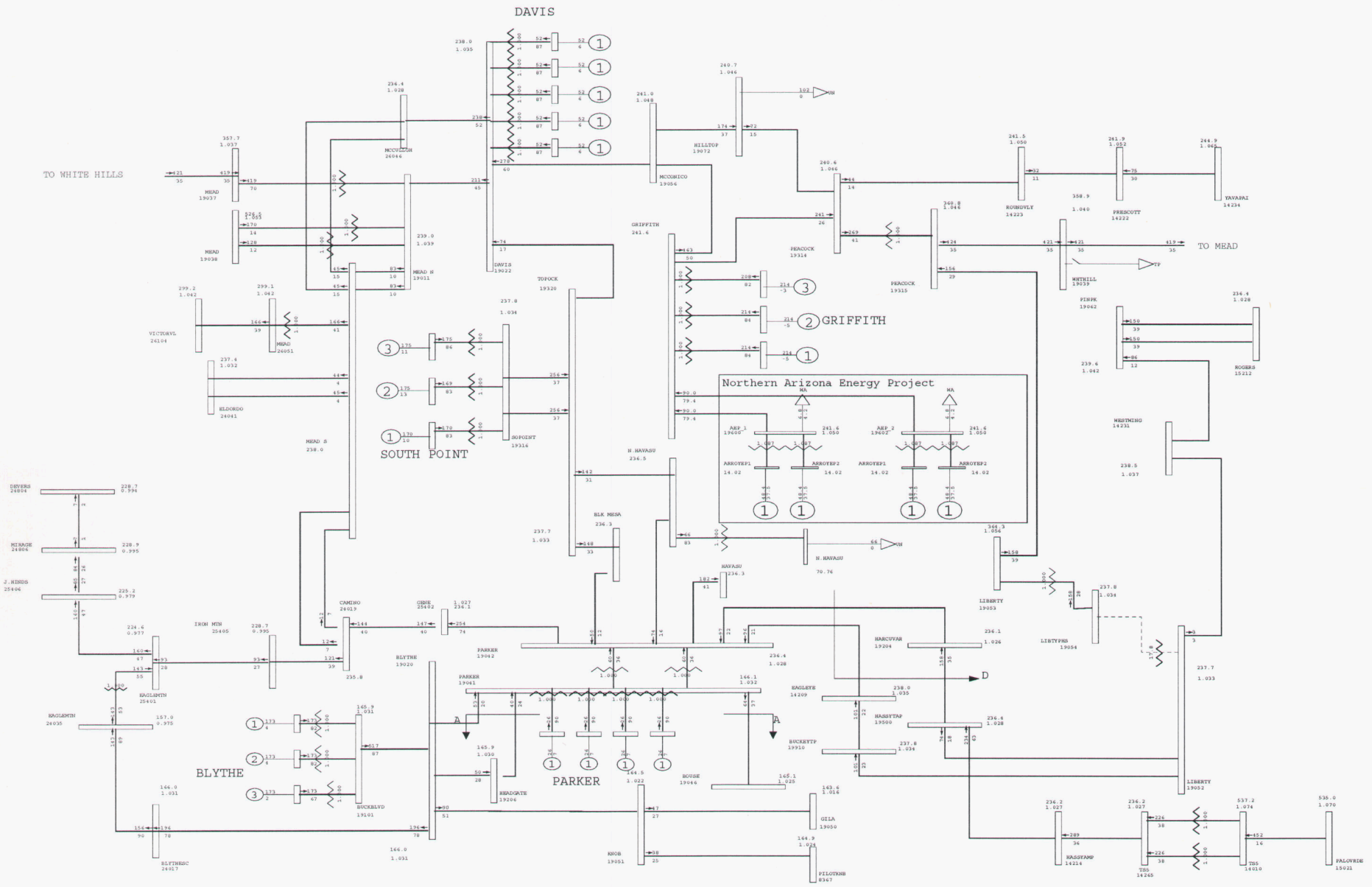

General Electric International, Inc. PSLF Program Thu Jul 19 15:18:40 2007 C:upslf16MyPSLF 8ha_pst_maxAI-LibBP-rev1.sav

	2008 HEAVY AUTUMN, NORTHERN ARIZONA ENERGY PROJECT, POST-PROJECT - Area Interch CASE: 08ha_pst_maxAI-LibBP-rev1.sav EOR=9300MW, Maximum WAPA-DSW Generation Modeled.	Plot 35 - 2008 Heavy Autumn Normal Conditions - After Project, Max WAPA Gen, Ar	MW/% rate C:upslf16MyPSLF iver2-na Rating = 1

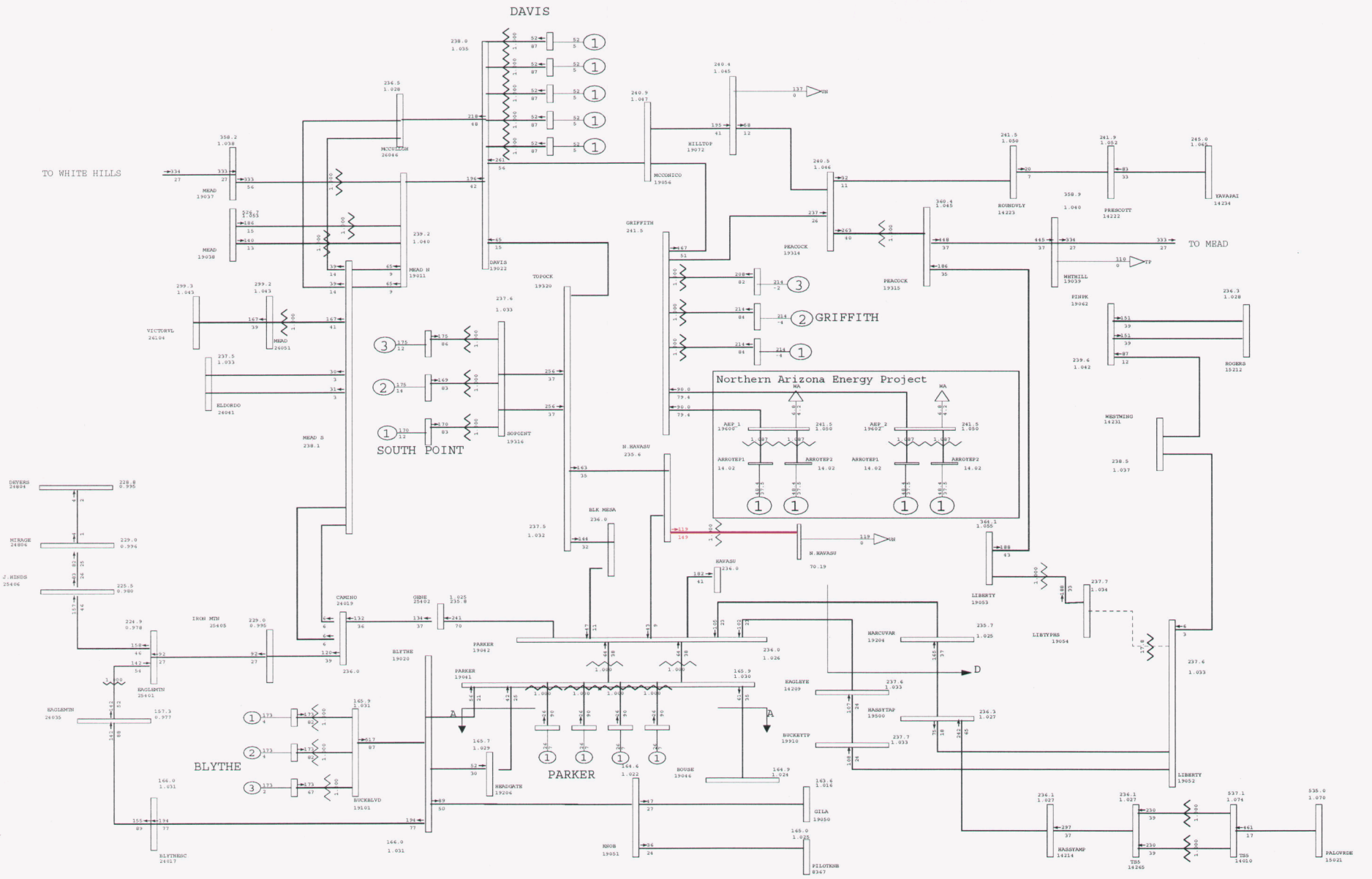

General Electric International, Inc. PSLF Program Thu Jul 19 15:18:42 2007 C:upslf16MyPSLF 8ha_pst_maxLD-LibBP-rev1.sav

2008 HEAVY AUTUMN, NORTHERN ARIZONA ENERGY PROJECT, POST-PROJECT - UNS Load Inc CASE: 08ha_pst_maxLD-LibBP-rev1.sav EOR=9300MW, Maximum WAPA-DSW Generation Modeled.	Plot 36 - 2008 Heavy Autumn Normal Conditions - After Project, Max WAPA Gen, Lo	MW/% rate C:upslf16MyPSLF iver2-na Rating = 1

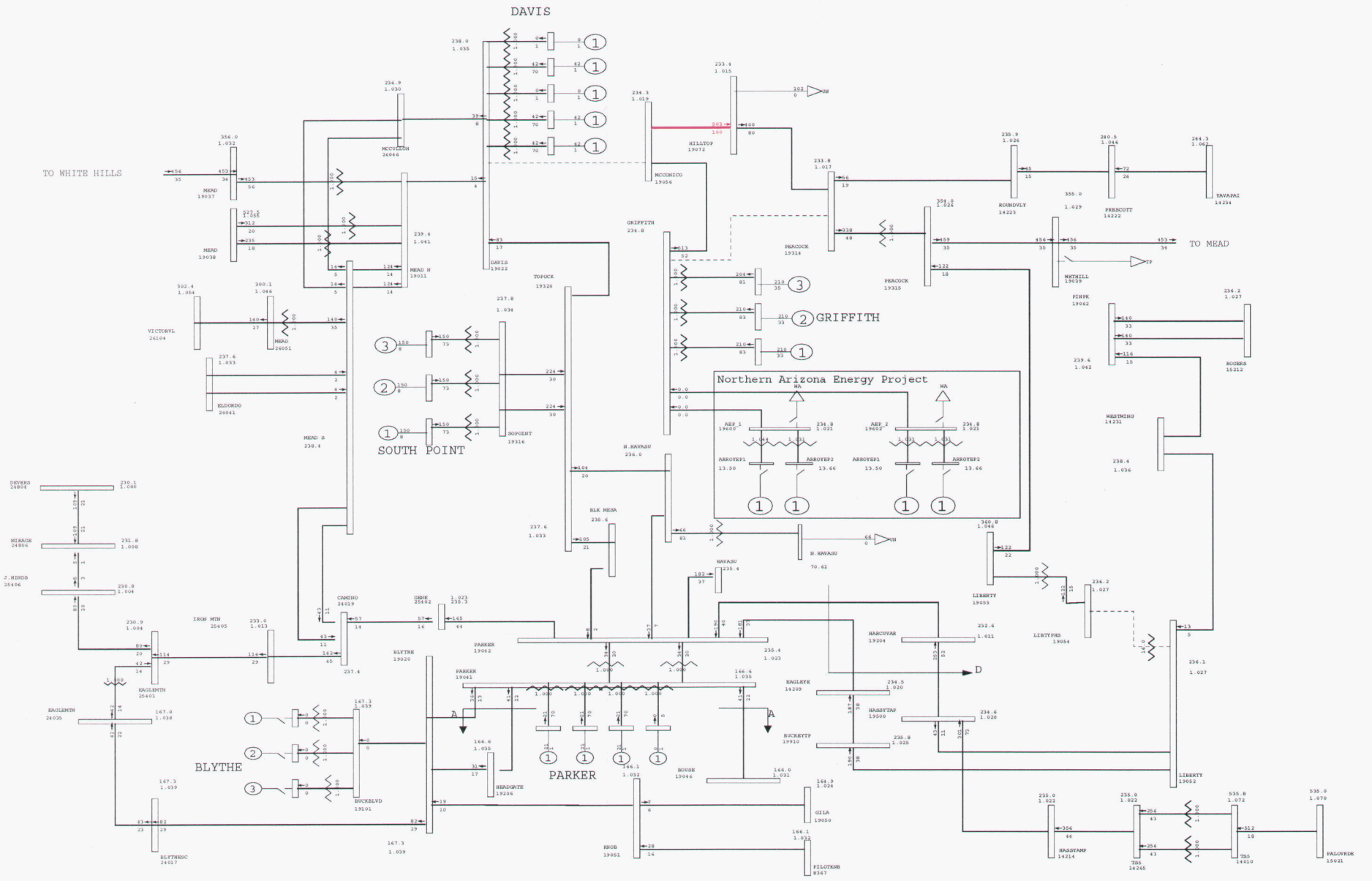
DAVIS
TO WHITE HILLS
MCCULLGH 26046
MEAD 19037
MEAD 19038
MEAD N 19011
DAVIS 19022
HILLTOP 19072
MCCONICO 19054
GRIFFITH 234.8
PEACOCK 19314
PEACOCK 19315
ROUNDVLY 14223
PRESCOTT 14222
YAVAPAI 14234
TO MEAD
MNTHILL 19039
PINPK 19062
ROGERS 15212
WESTWING 14231
GRIFFITH
Northern Arizona Energy Project
AEP_1 19600
AEP_2 19602
ARROYEP1
ARROYEP2
SOUTH POINT
SOPOINT 19316
TOPOCK 19320
VICTORVL 26104
MEAD 26051
ELDORDO 24041
MEAD S 238.4
N.HAVASU 236.0
N.HAVASU
BLK MESA 235.6
HAVASU 235.4
LIBERTY 19053
LIBTYPRS 19054
HARCUVAR 19204
HASSYTAP 19500
EAGLEYE 14209
BUCKEYTP 19910
LIBERTY 19052
HASSYAMP 14214
TS5 14245
TS5 14010
PALOVRDE 19021
DEVERS 24804
MIRAGE 24806
J.HINDS 25406
EAGLMTN 25401
EAGLEMTN 24035
BLYTHESC 24017
IRON MTN 25405
CAMINO 24019
GENE 25402
BLYTHE 19020
BUCKBLVD 19101
BLYTHE
PARKER 19042
PARKER 19041
PARKER
HEADGATE 19206
BOUSE 19044
GILA 19050
KNOB 19051
PILOTKNB 8367
A
D

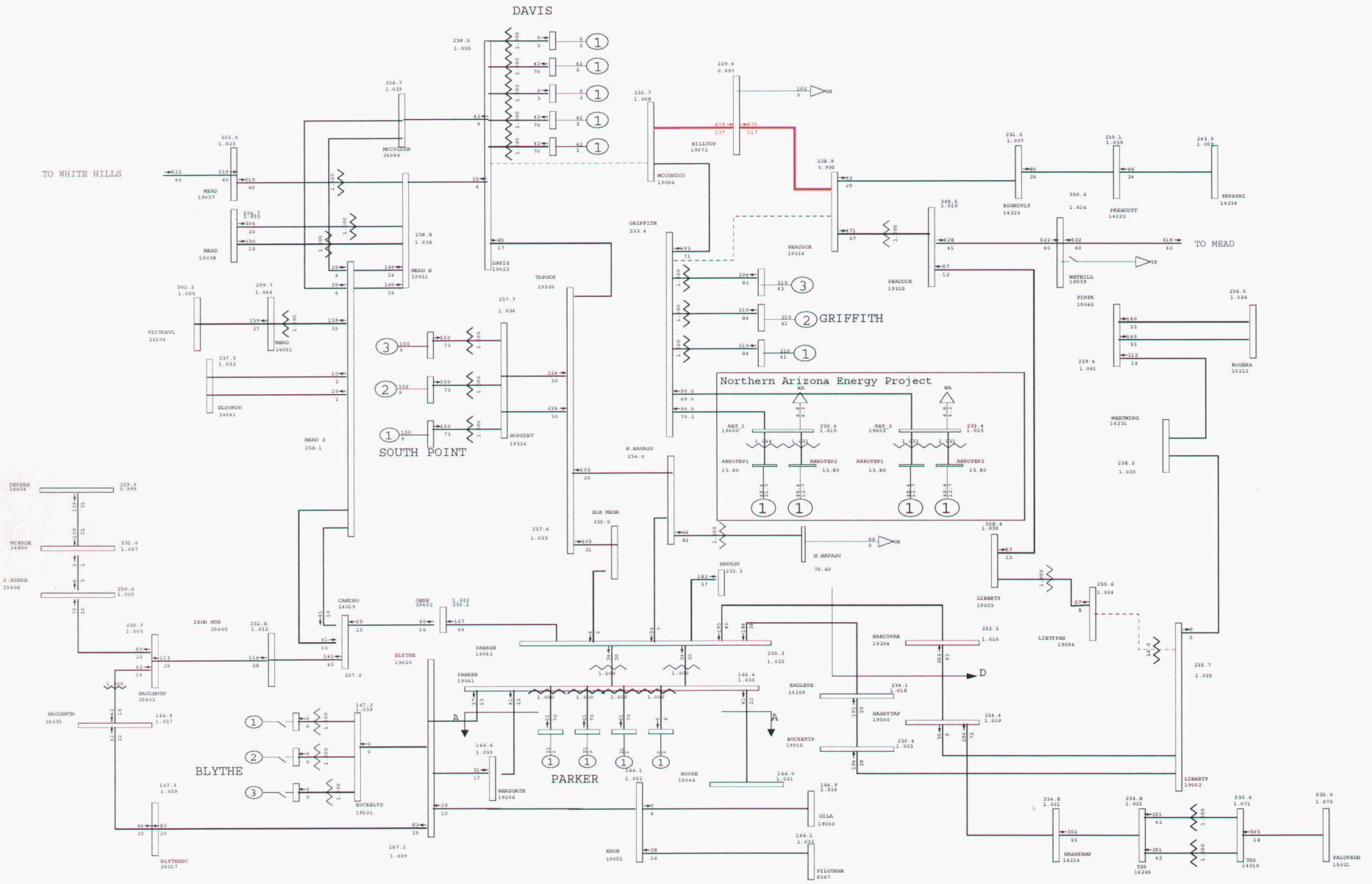

General Electric International, Inc. PSLF Program Thu Jul 19 15:18:48 2007 C:upslf16MyPSLF 8ha_pst_AI-LibBP-rev1.sav

2008 HEAVY AUTUMN, NORTHERN ARIZONA ENERGY PROJECT, POST-PROJECT - Area Interch CASE: 08ha_pst_AI-LibBP-rev1.sav EOR=9300MW, Minimum WAPA-DSW Generation Modeled.	Plot 38 - 2008 Heavy Autumn - After Project, min WAPA Gen, Area Interchange Outage: Griffith-Peacock & Davis-McConnico 230kV Lines	MW/% rate C:upslf16MyPSLF iver2-na Rating = 2

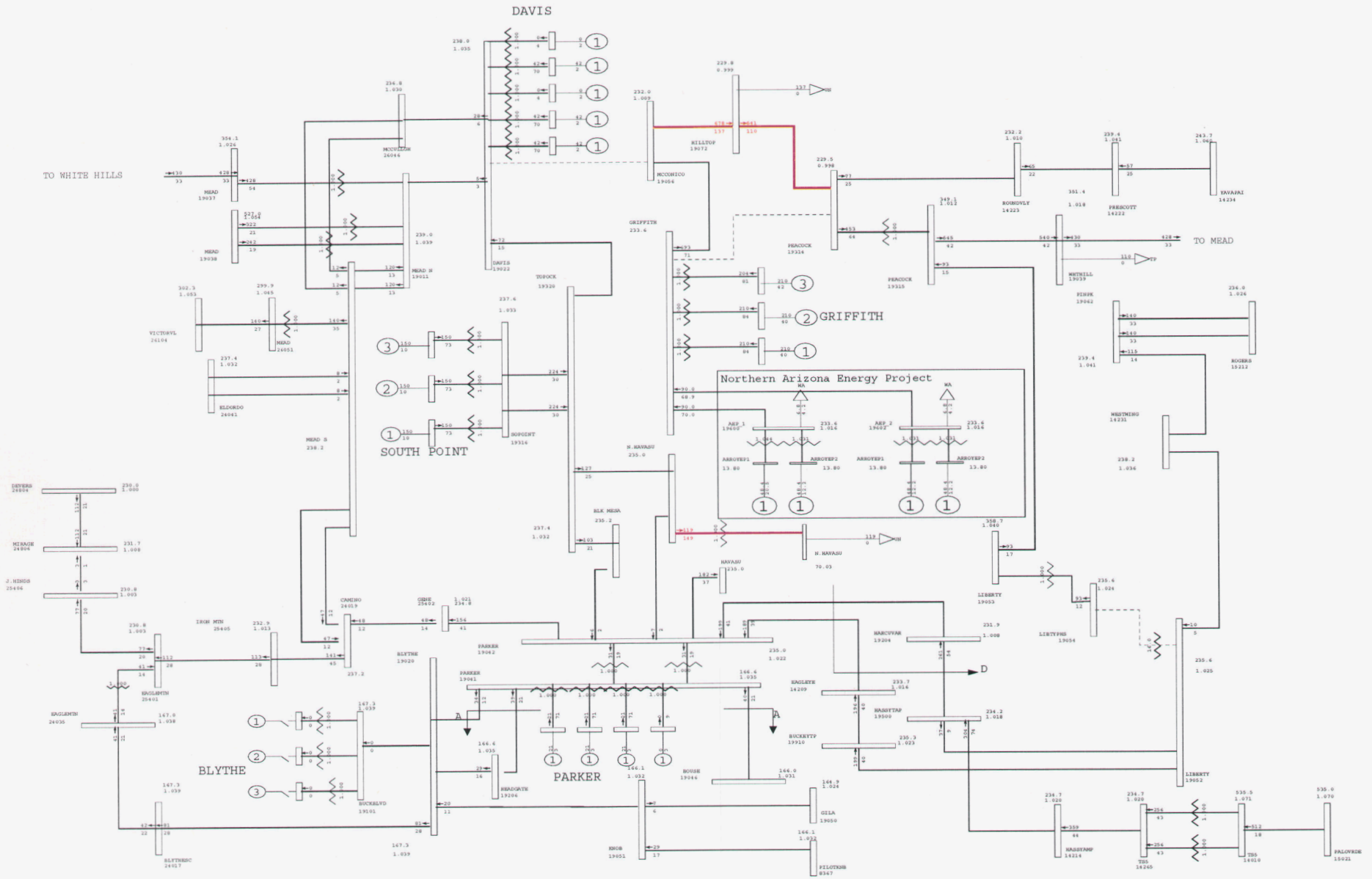

General Electric International, Inc. PSLF Program Thu Jul 19 15:18:52 2007 C:upslf16MyPSLF 8ha_pst_LD-LibBP-rev1.sav

	2008 HEAVY AUTUMN, NORTHERN ARIZONA ENERGY PROJECT, POST-PROJECT - UNS Load Inc CASE: 08ha_pst_LD-LibBP-rev1.sav EOR=9300MW, Minimum WAPA-DSW Generation Modeled.	Plot 39 - 2008 Heavy Autumn - After Project, min WAPA Gen, Regional Load Outage: Griffith-Peacock & Davis-McConnico 230kV Lines	MW/% rate C:upslf16MyPSLF iver2-na Rating = 2

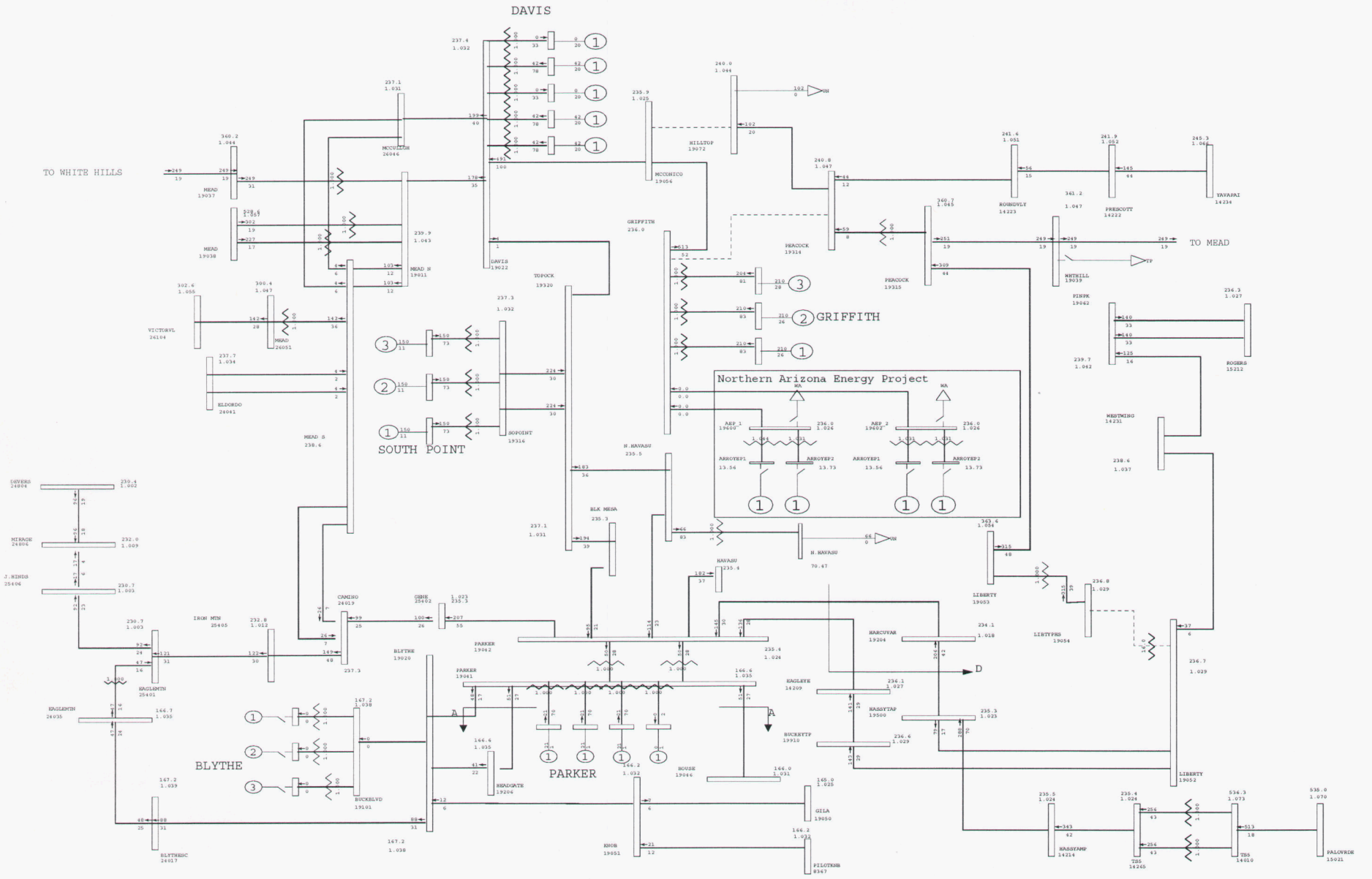

General Electric International, Inc. PSLF Program Thu Jul 19 15:18:54 2007 C:upslf16MyPSLF 8ha_pre-LibBP-rev1.sav

	2008 HEAVY AUTUMN, NORTHERN ARIZONA ENERGY PROJECT, PRE-PROJECT CASE: 08ha_pre-rev1.sav EOR=9300MW, Min WAPA-DSW Generation Modeled.	Plot 40 - 2008 Heavy Autumn - Before Project, min WAPA Gen Outage: Griffith-Peacock & Hilltop-McConnico 230kV Lines	MW/% rate C:upslf16MyPSLF iver2-na Rating = 2

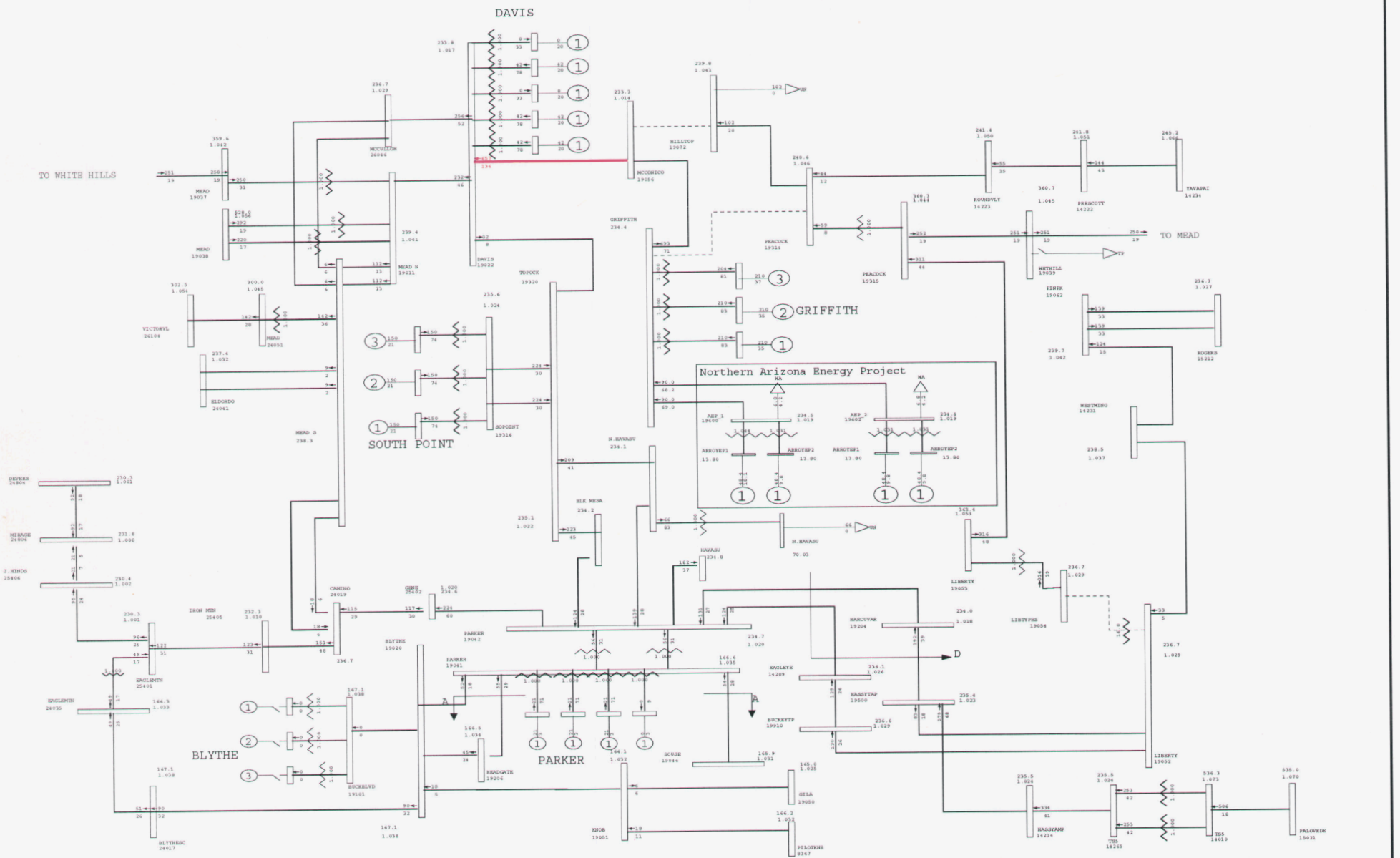

General Electric International, Inc. PSLF Program Thu Jul 19 15:18:56 2007 C:upslf16MyPSLF 8ha_pst_AI-LibBP-rev1.sav

	2008 HEAVY AUTUMN, NORTHERN ARIZONA ENERGY PROJECT, POST-PROJECT - Area Interch CASE: 08ha_pst_AI-LibBP-rev1.sav EOR=9300MW, Minimum WAPA-DSW Generation Modeled.	Plot 41 - 2008 Heavy Autumn - After Project, min WAPA Gen, Area Interchange Outage: Griffith-Peacock & Hilltop-McConnico 230kV Lines	MW/% rate C:upslf16MyPSLF iver2-na Rating = 2

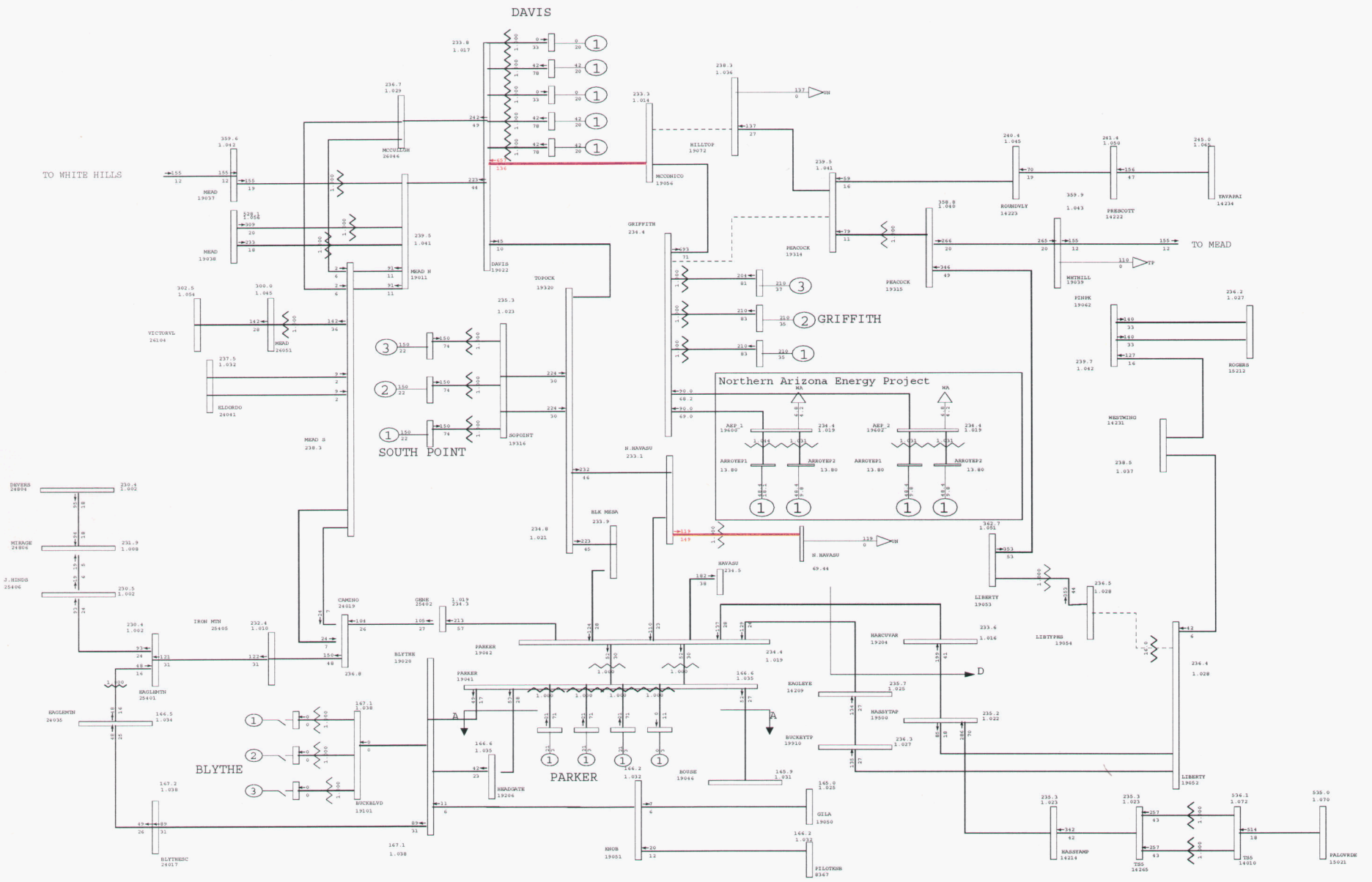

General Electric International, Inc. PSLF Program Thu Jul 19 15:18:58 2007 C:upslf16MyPSLF 8ha_pst_LD-LibBP-rev1.sav

2008 HEAVY AUTUMN, NORTHERN ARIZONA ENERGY PROJECT, POST-PROJECT - UNS Load Inc CASE: 08ha_pst_LD-LibBP-rev1.sav EOR=9300MW, Minimum WAPA-DSW Generation Modeled.	Plot 42 - 2008 Heavy Autumn - After Project, min WAPA Gen, Regional Load Outage: Griffith-Peacock & Hilltop-McConnico 230kV Lines	MW/% rate C:upslf16MyPSLF iver2-na Rating = 2

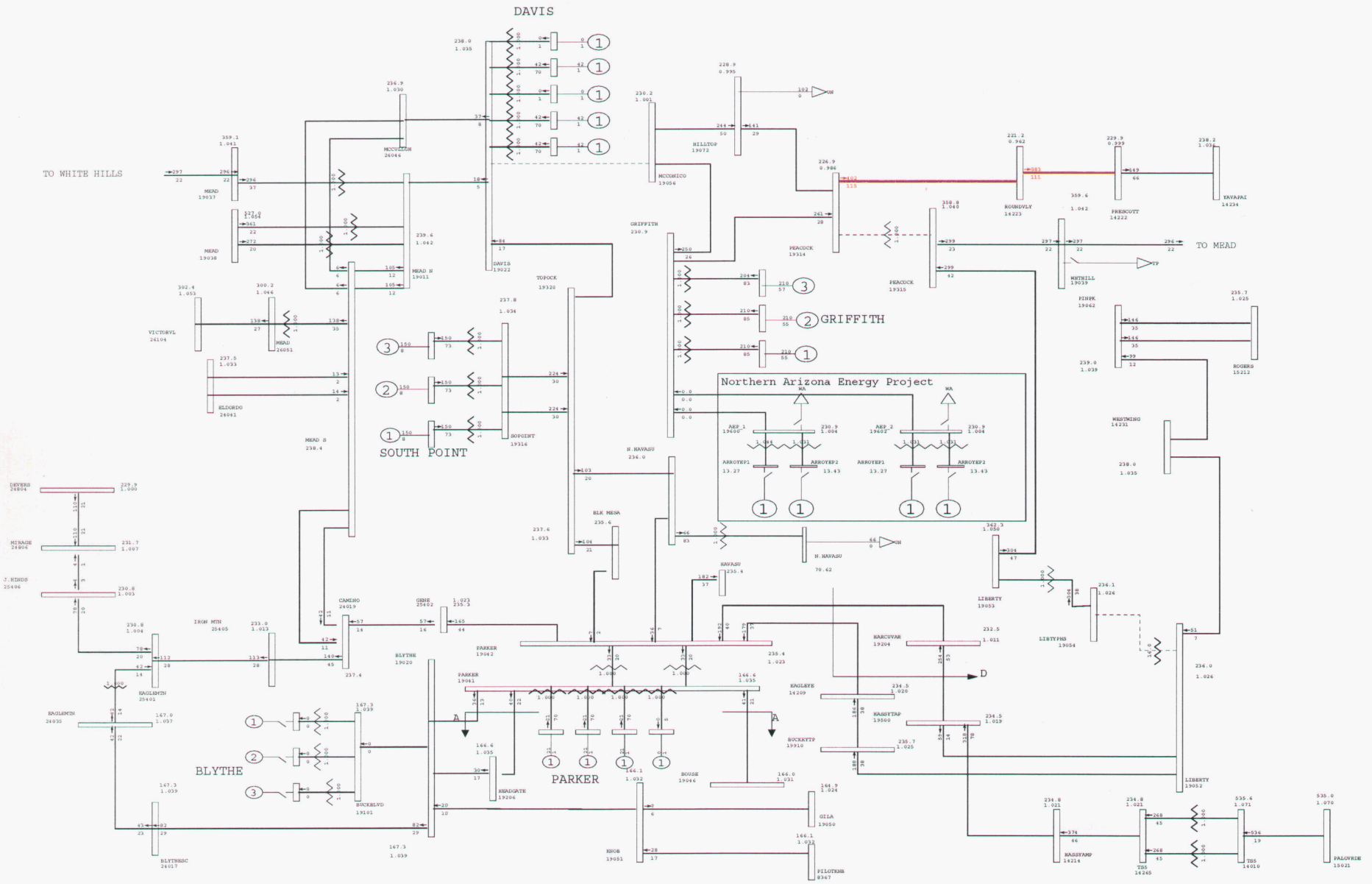

General Electric International, Inc. PSLF Program Thu Jul 19 15:19:02 2007 C:upslf16MyPSLF 8ha_pre-LibBP-rev1.sav

2008 HEAVY AUTUMN, NORTHERN ARIZONA ENERGY PROJECT, PRE-PROJECT CASE: 08ha_pre-rev1.sav EOR=9300MW, Min WAPA-DSW Generation Modeled.	Plot 43 - 2008 Heavy Autumn - Before Project, min WAPA Gen Outage: Peacock 345/230 Tran & Davis-McConnico 230kV Line	MW/% rate C:upslf16MyPSLF iver2-na Rating = 2

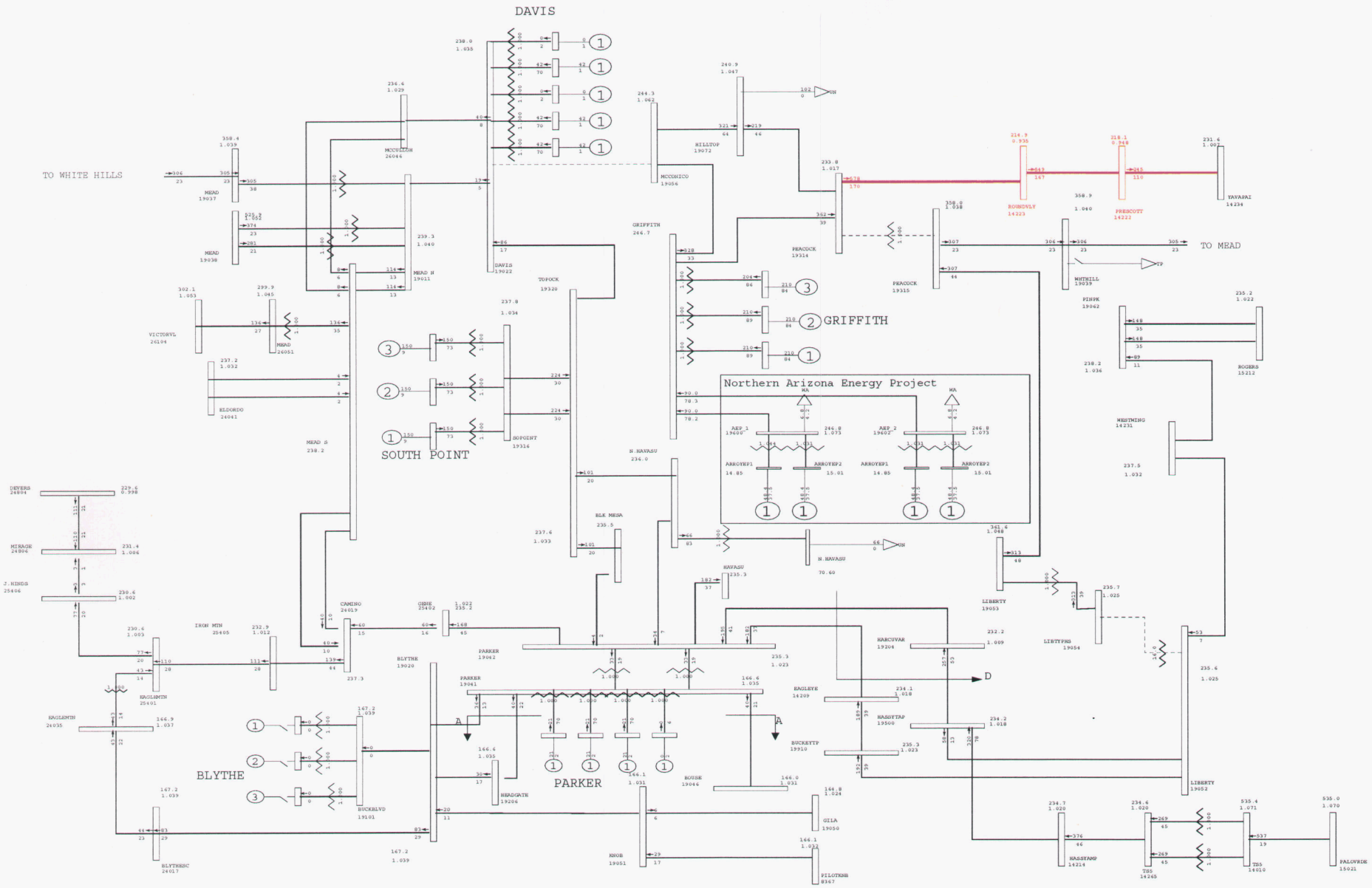

General Electric International, Inc. PSLF Program Thu Jul 19 15:19:08 2007 C:upslf16MyPSLF 8ha_pst_AI-LibBP-rev1.sav

	2008 HEAVY AUTUMN, NORTHERN ARIZONA ENERGY PROJECT, POST-PROJECT - Area Interch CASE: 08ha_pst_AI-LibBP-rev1.sav EOR=9300MW, Minimum WAPA-DSW Generation Modeled.	Plot 44 - 2008 Heavy Autumn - After Project, min WAPA Gen, Area Interchange Outage: Peacock 345/230 Tran & Davis-McConnico 230kV Line	MW/% rate C:upslf16MyPSLF iver2-na Rating = 2

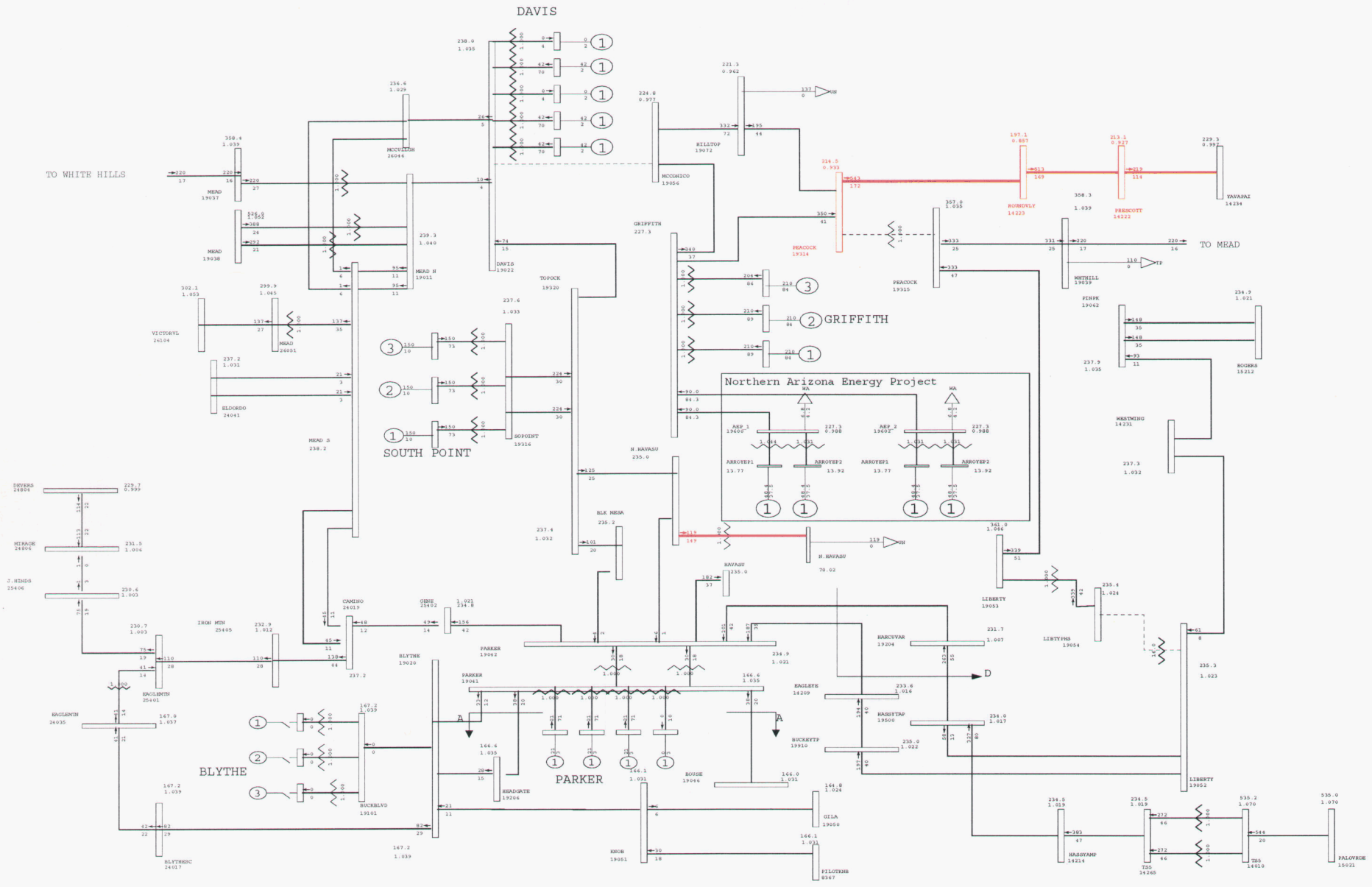

General Electric International, Inc. PSLF Program Thu Jul 19 15:19:13 2007 C:upslf16MyPSLF 8ha_pst_LD-LibBP-rev1.sav

	2008 HEAVY AUTUMN, NORTHERN ARIZONA ENERGY PROJECT, POST-PROJECT - UNS Load Inc CASE: 08ha_pst_LD-LibBP-rev1.sav EOR=9300MW, Minimum WAPA-DSW Generation Modeled.	Plot 45 - 2008 Heavy Autumn - After Project, min WAPA Gen, Regional Load Outage: Peacock 345/230 Tran & Davis-McConnico 230kV Line	MW/% rate C:upslf16MyPSLF iver2-na Rating = 2

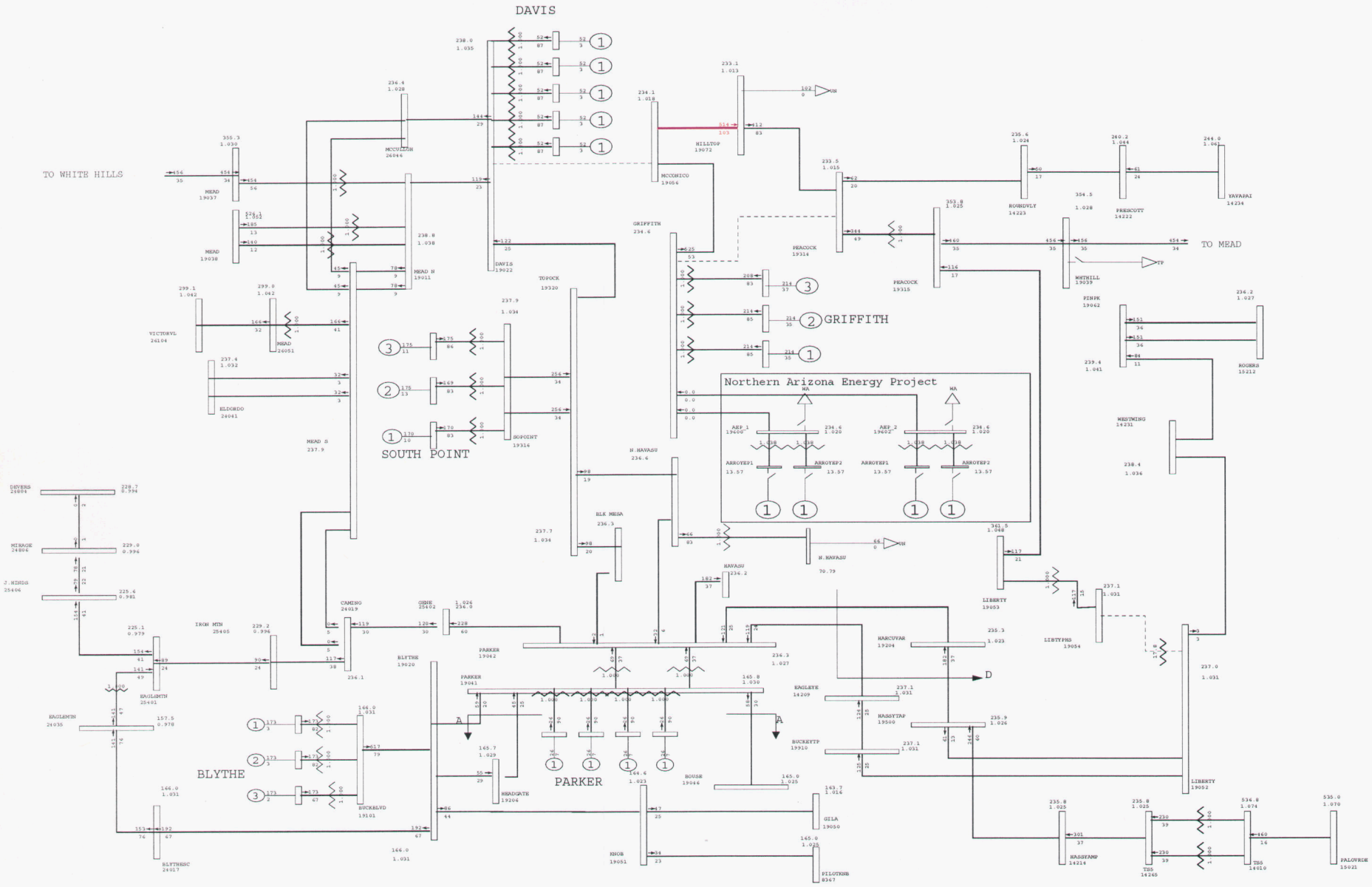

General Electric International, Inc. PSLF Program Thu Jul 19 15:19:16 2007 C:upslf16MyPSLF 8ha_pre_max-LibBP-rev1.sav

2008 HEAVY AUTUMN, NORTHERN ARIZONA ENERGY PROJECT, PRE-PROJECT CASE: 08ha_pre_max-LibBP-rev1.sav EOR=9300MW, Maximum WAPA-DSW Generation Modeled.	Plot 46 - 2008 Heavy Autumn - Before Project, max WAPA Gen Outage: Griffith-Peacock & Davis-McConnico 230kV Lines	MW/% rate C:upslf16MyPSLF iver2-na Rating = 2

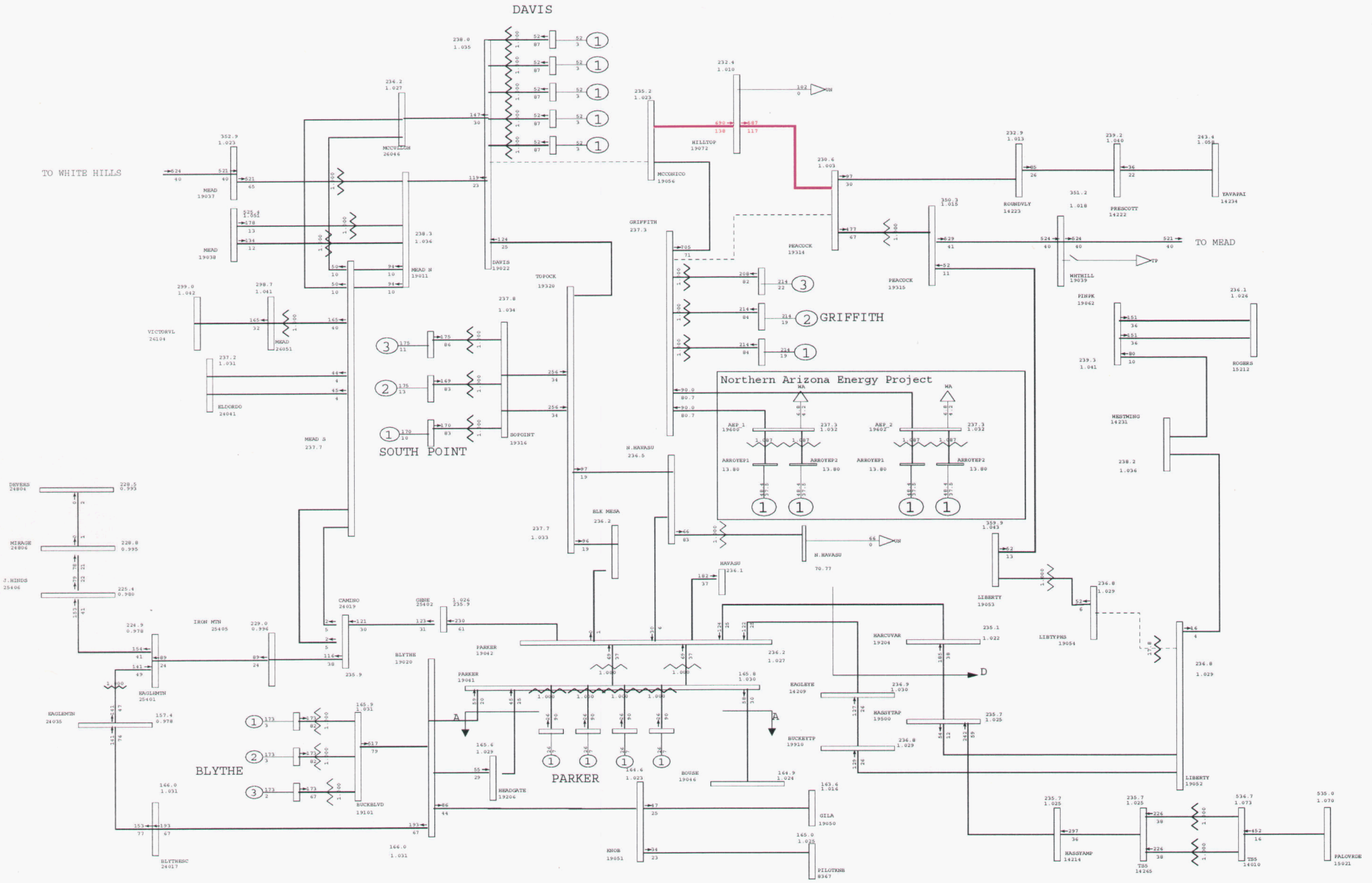

General Electric International, Inc. PSLF Program Thu Jul 19 15:19:23 2007 C:upslf16MyPSLF 8ha_pst_maxAI-LibBP-rev1.sav

	2008 HEAVY AUTUMN, NORTHERN ARIZONA ENERGY PROJECT, POST-PROJECT - Area Interch CASE: 08ha_pst_maxAI-LibBP-rev1.sav EOR=9300MW, Maximum WAPA-DSW Generation Modeled.	Plot 47 - 2008 Heavy Autumn - After Project, max WAPA Gen, Area Interchange Outage: Griffith-Peacock & Davis-McConnico 230kV Lines	MW/% rate C:upslf16MyPSLF iver2-na Rating = 2

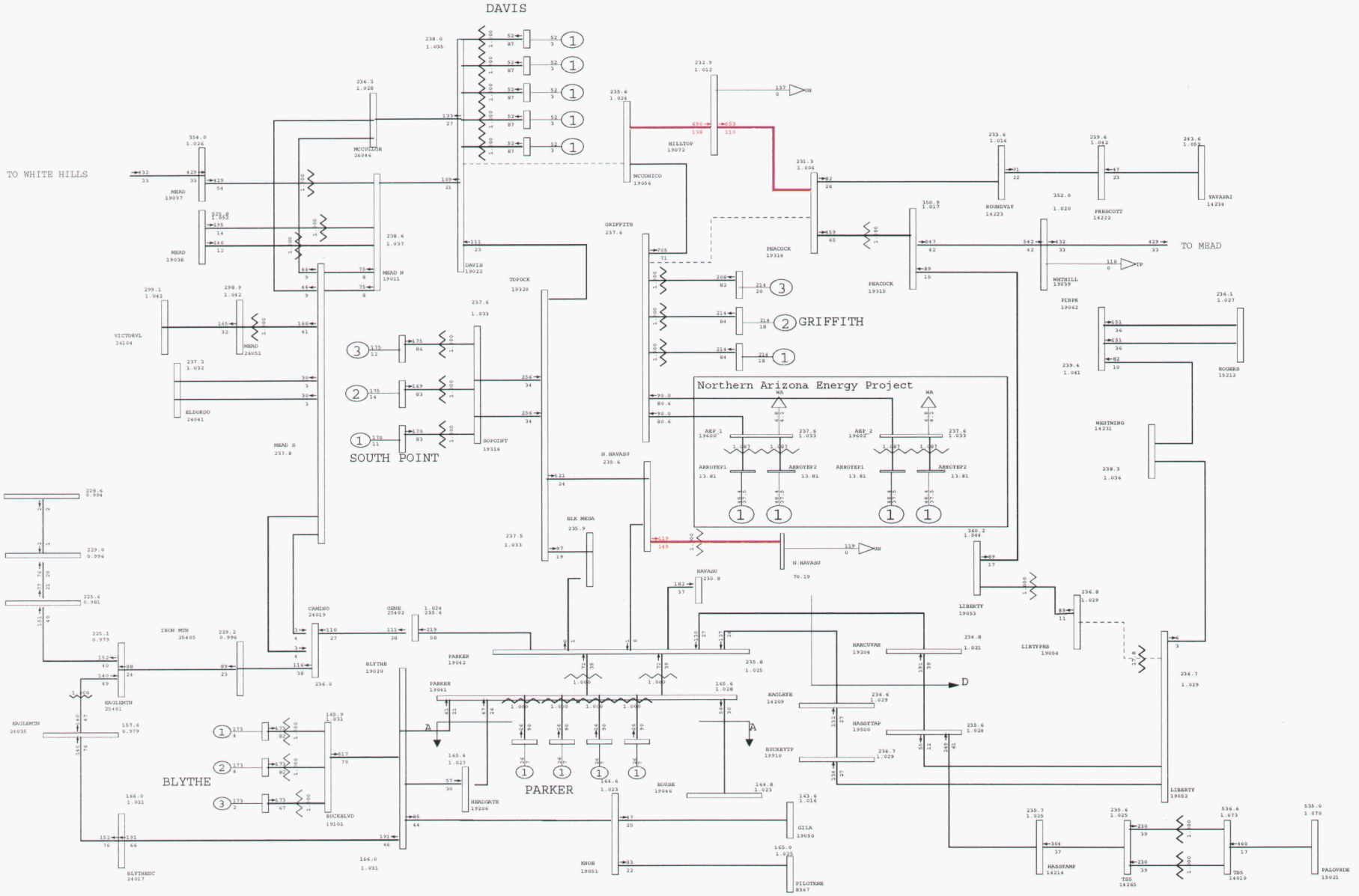

General Electric International, Inc. PSLF Program Thu Jul 19 15:19:31 2007 C:upslf16MyPSLF 8ha_pst_maxLD-LibBP-rev1.sav

	2008 HEAVY AUTUMN, NORTHERN ARIZONA ENERGY PROJECT, POST-PROJECT - UNS Load Inc CASE: 08ha_pst_maxLD-LibBP-rev1.sav EOR=9300MW, Maximum WAPA-DSW Generation Modeled.	Plot 48 - 2008 Heavy Autumn - After Project, max WAPA Gen, Regional Load Outage: Griffith-Peacock & Davis-McConnico 230kV Lines	MW/% rate C:upslf16MyPSLF iver2-na Rating = 2

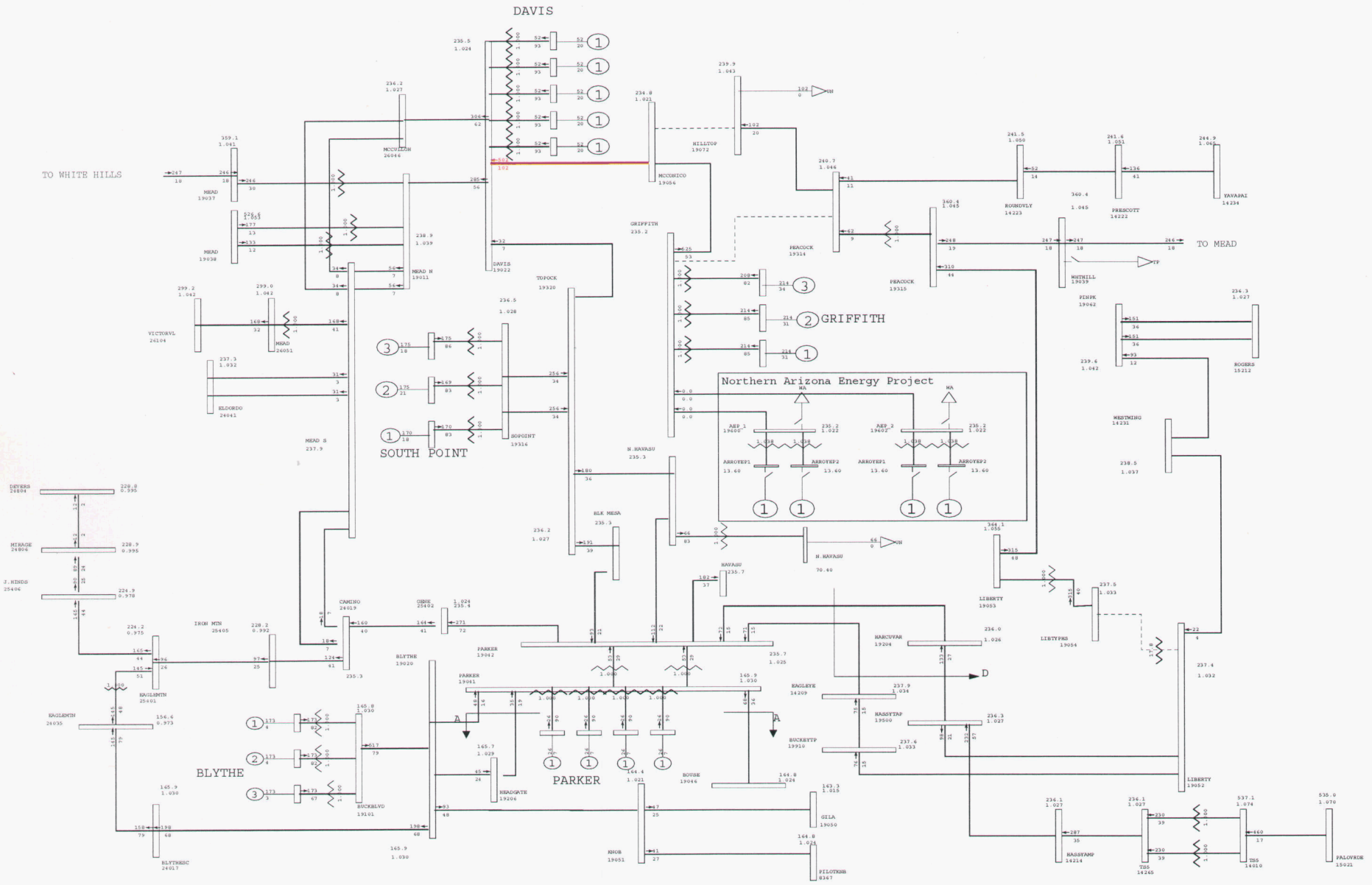

General Electric International, Inc. PSLF Program Thu Jul 19 15:25:24 2007 C:upslf16MyPSLF 8ha_pre_max-LibBP-rev1.sav

2008 HEAVY AUTUMN, NORTHERN ARIZONA ENERGY PROJECT, PRE-PROJECT CASE: 08ha_pre_max-LibBP-rev1.sav EOR=9300MW, Maximum WAPA-DSW Generation Modeled.	Plot 49 - 2008 Heavy Autumn - Before Project, max WAPA Gen Outage: Griffith-Peacock & Hilltop-McConnico 230kV Lines	MW/% rate C:upslf16MyPSLF iver2-na Rating = 2

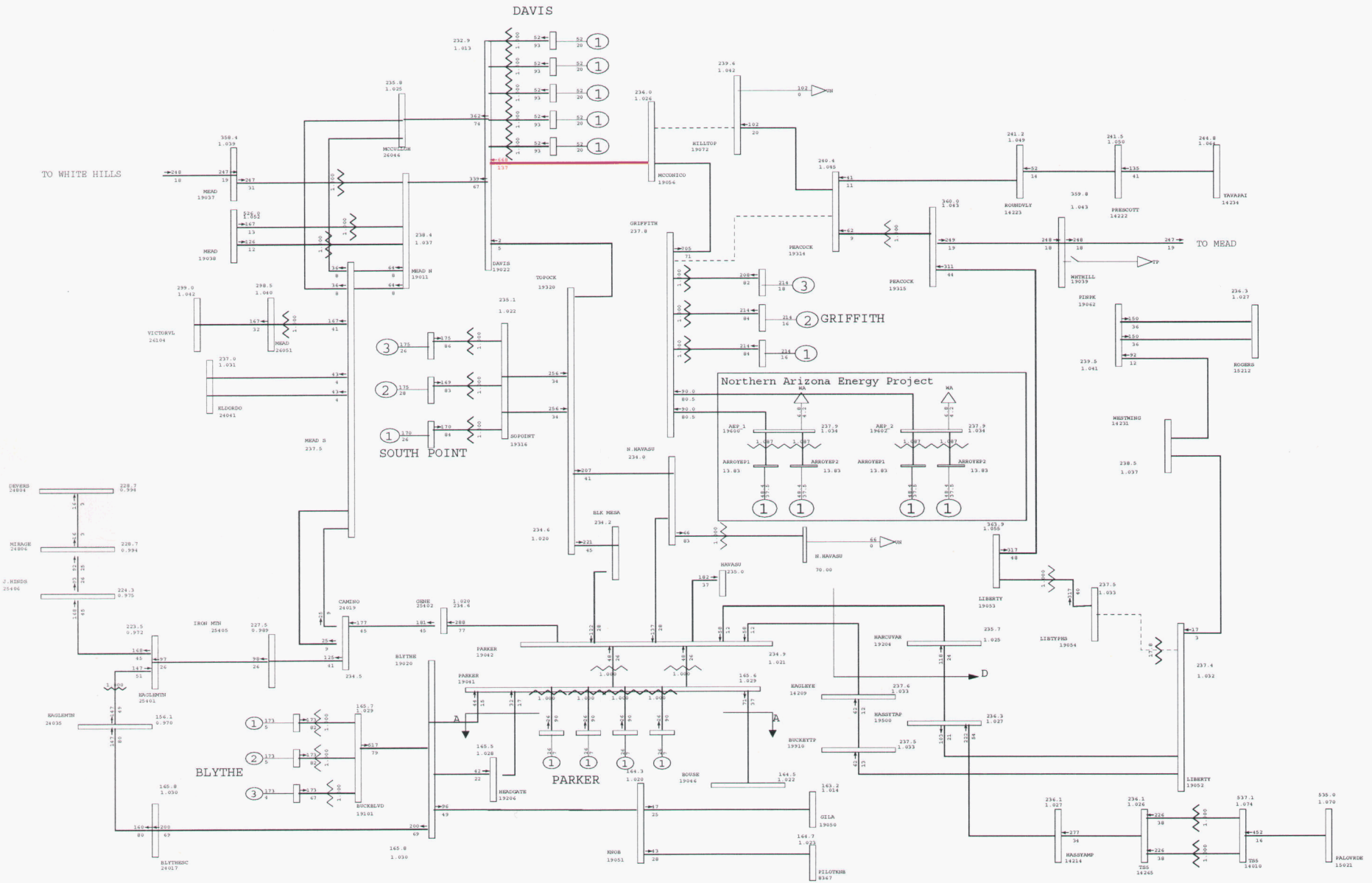

General Electric International, Inc. PSLF Program Thu Jul 19 15:19:36 2007 C:upslf16MyPSLF 8ha_pst_maxAI-LibBP-rev1.sav

	2008 HEAVY AUTUMN, NORTHERN ARIZONA ENERGY PROJECT, POST-PROJECT - Area Interch CASE: 08ha_pst_maxAI-LibBP-rev1.sav EOR=9300MW, Maximum WAPA-DSW Generation Modeled.	Plot 50 - 2008 Heavy Autumn - After Project, max WAPA Gen, Area Interchange Outage: Griffith-Peacock & Hilltop-McConnico 230kV Lines	MW/% rate C:upslf16MyPSLF iver2-na Rating = 2

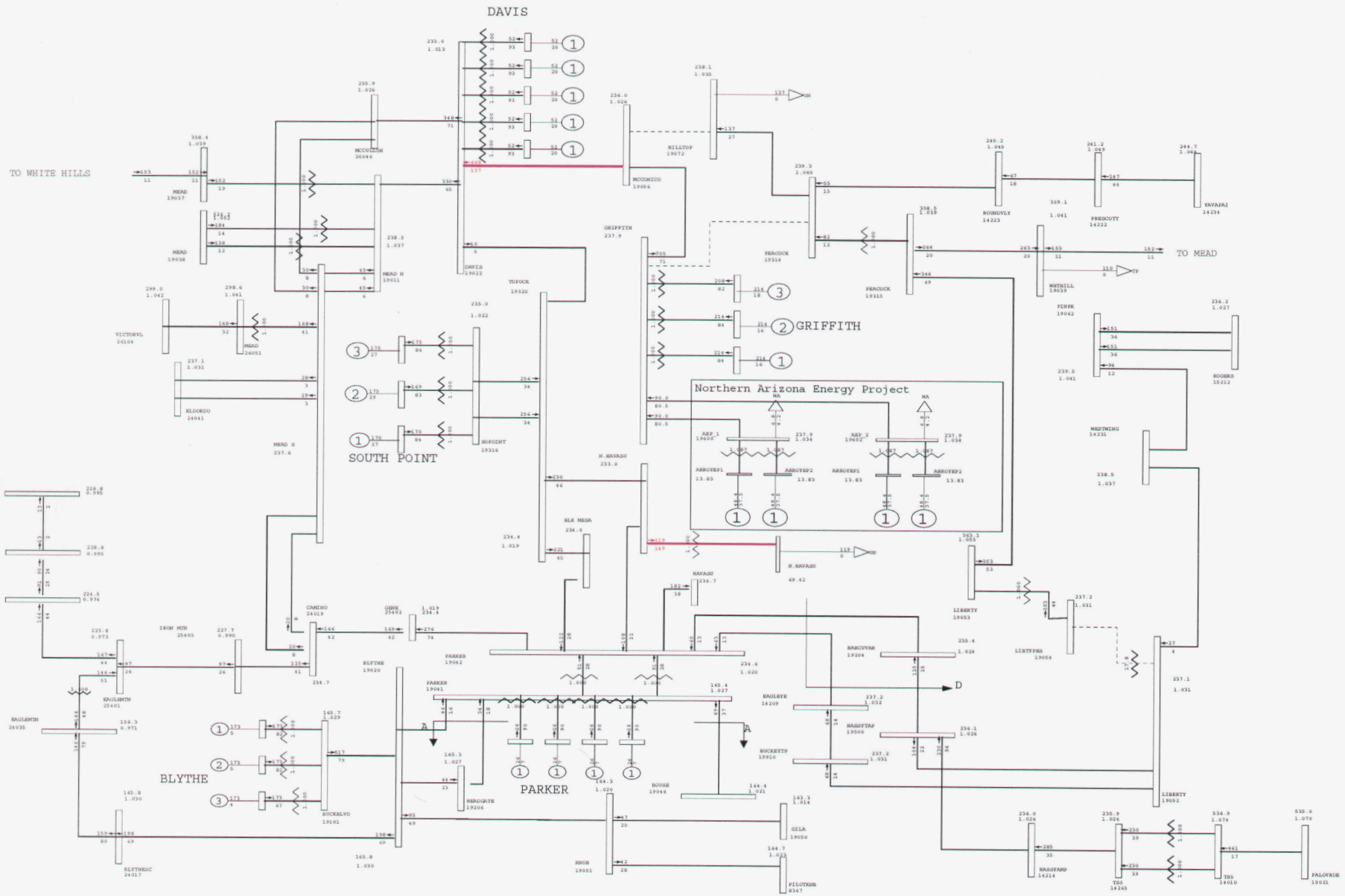

General Electric International, Inc. PSLF Program Thu Jul 19 15:19:38 2007 C:upslf16MyPSLF 8ha_pst_maxLD-LibBP-rev1.sav

	2008 HEAVY AUTUMN, NORTHERN ARIZONA ENERGY PROJECT, POST-PROJECT - UNS Load Inc CASE: 08ha_pst_maxLD-LibBP-rev1.sav EOR=9300MW, Maximum WAPA-DSW Generation Modeled.	Plot 51 - 2008 Heavy Autumn - After Project, max WAPA Gen, Regional Load Outage: Griffith-Peacock & Hilltop-McConnico 230kV Lines	MW/% rate C:upslf16MyPSLF iver2-na Rating = 2

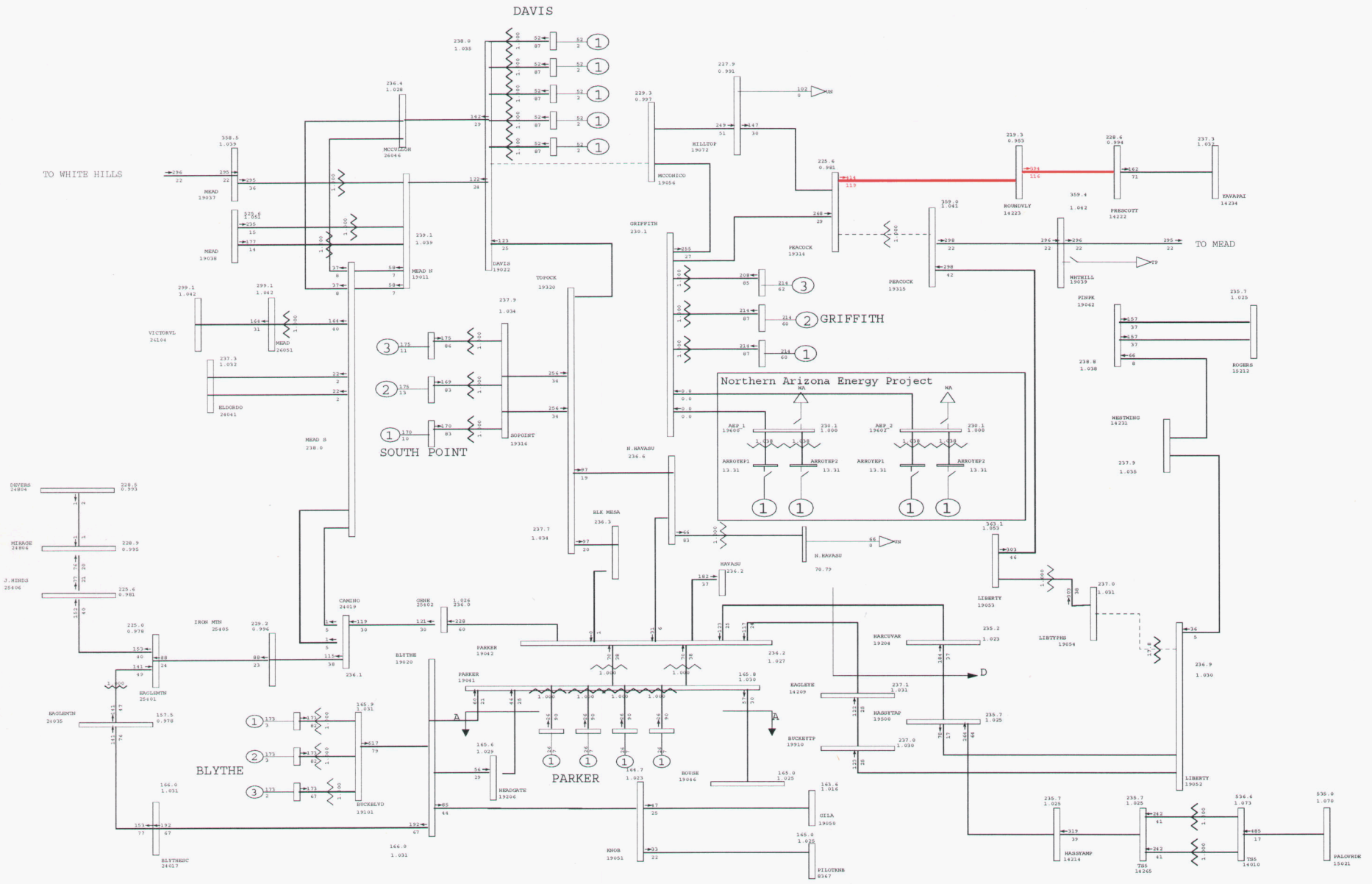

General Electric International, Inc. PSLF Program Thu Jul 19 15:19:42 2007 C:upslf16MyPSLF 8ha_pre_max-LibBP-rev1.sav

2008 HEAVY AUTUMN, NORTHERN ARIZONA ENERGY PROJECT, PRE-PROJECT CASE: 08ha_pre_max-LibBP-rev1.sav EOR=9300MW, Maximum WAPA-DSW Generation Modeled.	Plot 52 - 2008 Heavy Autumn - Before Project, max WAPA Gen Outage: Peacock 345/230 Tran & Davis-McConnico 230kV Line	MW/% rate C:upslf16MyPSLF iver1-na Rating = 2

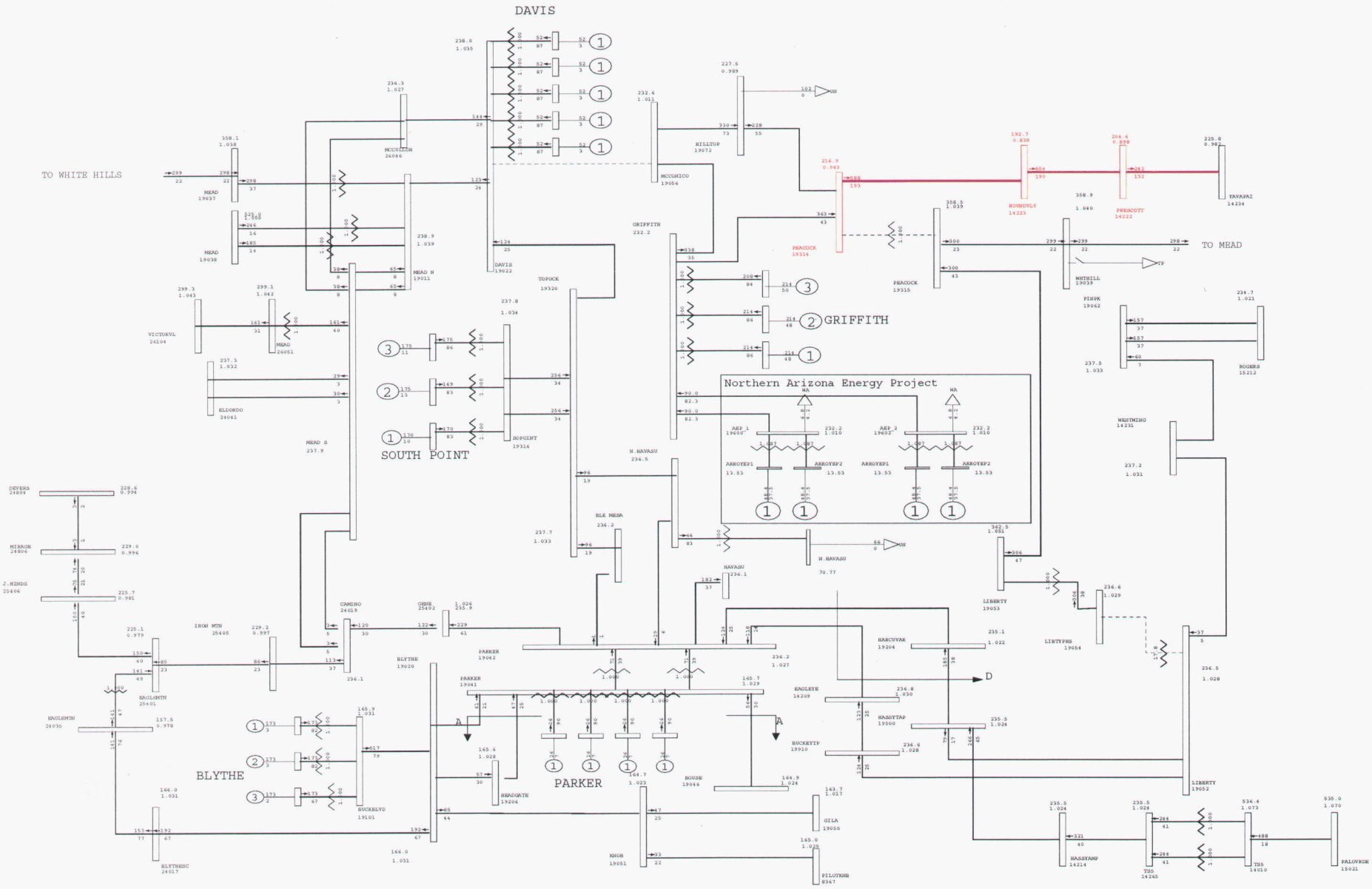

General Electric International, Inc. PSLF Program Thu Jul 19 15:19:47 2007 C:upslf16MyPSLF 8ha_pst_maxai-libbp-pktran-dvmcc.sav

	2008 HEAVY AUTUMN, NORTHERN ARIZONA ENERGY PROJECT, POST-PROJECT - Area Interch CASE: 08ha_pst_maxAI-LibBP-rev1.sav EOR=9300MW, Maximum WAPA-DSW Generation Modeled.	Plot 53 - 2008 Heavy Autumn - After Project, max WAPA Gen, Area Interchange Outage: Peacock 345/230 Tran & Davis-McConnico 230kV Line	MW/% rate C:upslf16MyPSLF iver2-na Rating = 2

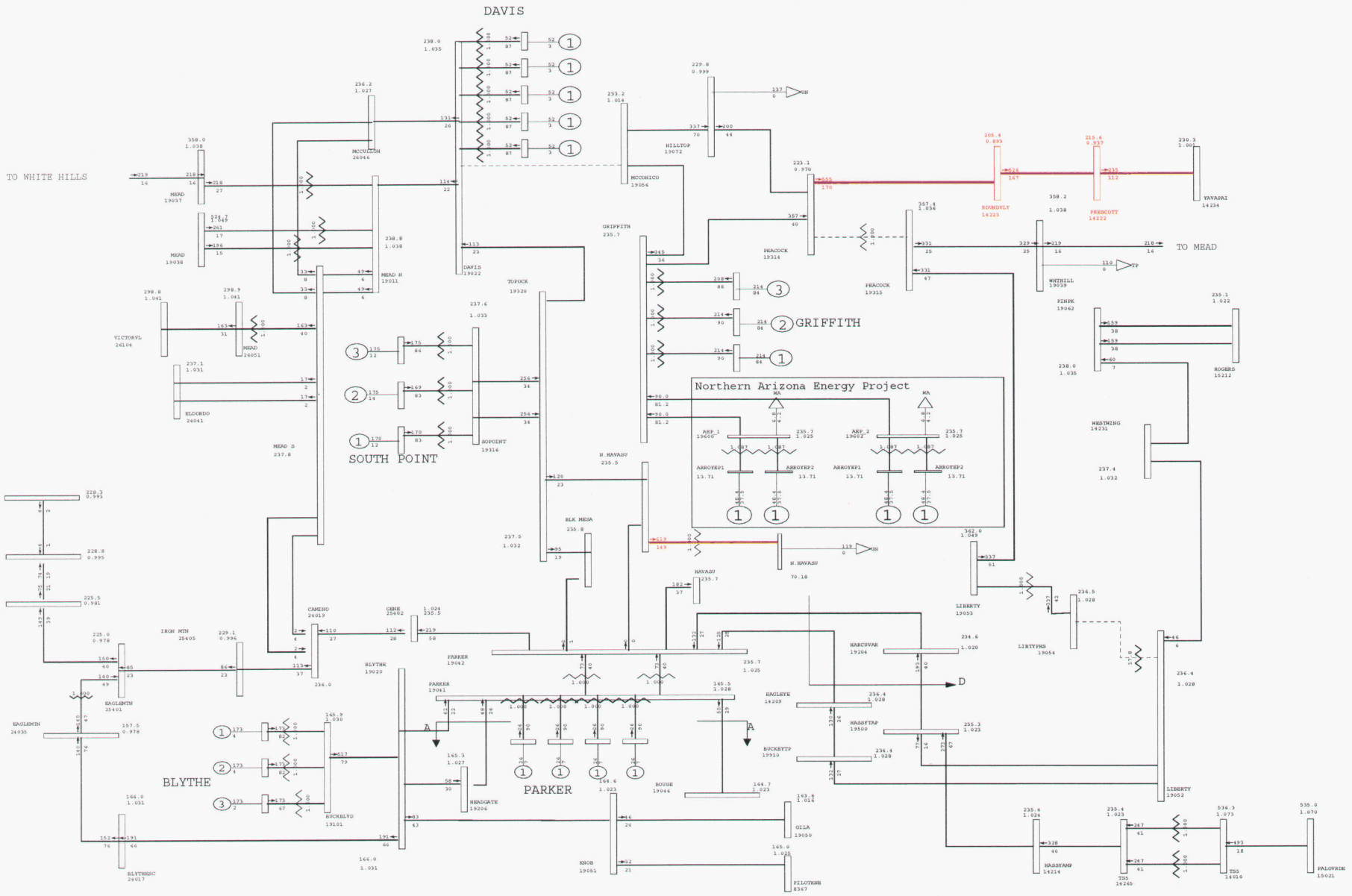

General Electric International, Inc. PSLF Program Thu Jul 19 15:19:53 2007 C:upslf16MyPSLF 8ha_pst_maxLD-LibBP-rev1.sav

	2008 HEAVY AUTUMN, NORTHERN ARIZONA ENERGY PROJECT, POST-PROJECT - UNS Load Inc CASE: 08ha_pst_maxLD-LibBP-rev1.sav EOR=9300MW, Maximum WAPA-DSW Generation Modeled.	Plot 54 - 2008 Heavy Autumn - After Project, max WAPA Gen, Regional Load Outage: Peacock 345/230 Tran & Davis-McConnico 230kV Line	MW/% rate C:upslf16MyPSLF iver2-na Rating = 2

Appendix C

List of Contingencies

APPENDIX C – LIST OF CONTINGENCIES

NERC/WECC Category "B" and "C" contingency lists studied for the Northern Arizona Energy Project.

NERC/WECC Category "B" Contingencies

```
#  The following contingencies are included.
#  B2 - Relevant breaker-to-breater single 500 kV transmission circuit outages in areas 14(AZ), 18(Nevada),
#       22(SDG&E), 24(SCE) and 26(LADWP).
#  B2 - Relevant breaker-to-breaker single 230 kV transmission circuit outages in areas 14(AZ), 18 (Nevada) and 24 (SCE).
#  B2 - All breaker-to-breaker single transmission circuit outages in zone 191.
#  B3 - All single transformer outages (500/230kV) for the above areas.
#

#  Base Case -- Case Number 0
0
#
#  Case Number 1
1  14000 14004  "1 "   0    # LINE  from  CHOLLA   500.00 to SAGUARO  500.00  "1 "
0
#
#  Case Number 2
1  14001 14002  "1 "   0    # LINE  from  FOURCORN 500.00 to MOENKOPI 500.00  "1 "
0
#
#  Case Number 3
1  14002 14006  "1 "   0    # LINE  from  MOENKOPI 500.00 to YAVAPAI  500.00  "1 "
0
#
#  Case Number 4
1  14002 26044  "1 "   0    # LINE  from  MOENKOPI 500.00 to MARKETPL 500.00  "1 "
0
#
#  Case Number 5
1  14003 14002  "1 "   0    # LINE  from  NAVAJO   500.00 to MOENKOPI 500.00  "1 "
0
#
#  Case Number 6
1  14003 14005  "1 "   0    # LINE  from  NAVAJO   500.00 to WESTWING 500.00  "1 "
0
#
#  Case Number 7
1  14004 16000  "1 "   0    # LINE  from  SAGUARO  500.00 to TORTOLIT 500.00  "1 "
0
#
#  Case Number 8
1  14004 16001  "1 "   0    # LINE  from  SAGUARO  500.00 to TORTLIT2 500.00  "1 "
0
#
#  Case Number 9
1  14006 14005  "1 "   0    # LINE  from  YAVAPAI  500.00 to WESTWING 500.00  "1 "
0
#
#  Case Number 10
1  14008 14007  "1 "   0    # LINE  from  JOJOBA   500.00 to GILARIVR 500.00  "1 "
0
#
#  Case Number 11
1  14008 14007  "2 "   0    # LINE  from  JOJOBA   500.00 to GILARIVR 500.00  "2 "
0
#
#  Case Number 12
1  14008 15011  "1 "   0    # LINE  from  JOJOBA   500.00 to KYRENE   500.00  "1 "
0
#
#  Case Number 13
1  15001 14000  "1 "   0    # LINE  from  CORONADO 500.00 to CHOLLA   500.00  "1 "
0
#
#  Case Number 14
1  15001 15041  "1 "   0    # LINE  from  CORONADO 500.00 to SILVERKG 500.00  "1 "
```

```
0
#
#  Case Number 15
1  15021 14005  "1 "   0    # LINE  from  PALOVRDE 500.00 to WESTWING 500.00  "1 "
0
#
#  Case Number 16
1  15021 15061  "1 "   0    # LINE  from  PALOVRDE 500.00 to RUDD     500.00  "1 "
0
#
#  Case Number 17
1  15034 14005  "1 "   0    # LINE  from  PERKINS  500.00 to WESTWING 500.00  "1 "
0
#
#  Case Number 18
1  15041 15051  "1 "   0    # LINE  from  SILVERKG 500.00 to BROWNING 500.00  "1 "
0
#
#  Case Number 19
1  15051 15011  "1 "   0    # LINE  from  BROWNING 500.00 to KYRENE   500.00  "1 "
0
#
#  Case Number 20
1  15090 14008  "1 "   0    # LINE  from  HASSYAMP 500.00 to JOJOBA   500.00  "1 "
0
#
#  Case Number 21
1  15090 14009  "1 "   0    # LINE  from  HASSYAMP 500.00 to REDHAWK  500.00  "1 "
0
#
#  Case Number 22
1  15090 15021  "1 "   0    # LINE  from  HASSYAMP 500.00 to PALOVRDE 500.00  "1 "
0
#
#  Case Number 23
1  15090 15092  "1 "   0    # LINE  from  HASSYAMP 500.00 to ARLINTON 500.00  "1 "
0
#
#  Case Number 24
1  15090 15093  "1 "   0    # LINE  from  HASSYAMP 500.00 to HARQUAHA 500.00  "1 "
0
#
#  Case Number 25
1  15090 15094  "1 "   0    # LINE  from  HASSYAMP 500.00 to MESQUITE 500.00  "1 "
0
#
#  Case Number 26
1  18430 18450  "1 "   0    # LINE  from  DUKE     500.00 to H ALLEN  500.00  "1 "
0
#
#  Case Number 27
1  18440 18450  "1 "   0    # LINE  from  MIRANT   500.00 to H ALLEN  500.00  "1 "
0
#
#  Case Number 28
1  18450 18451  "1 "   0    # LINE  from  H ALLEN  500.00 to NWEST    500.00  "1 "
0
#
#  Case Number 29
1  18450 18452  "1 "   0    # LINE  from  H ALLEN  500.00 to CRSTL N  500.00  "1 "
0
#
#  Case Number 30
1  18450 19038  "1 "   0    # LINE  from  H ALLEN  500.00 to MEAD     500.00  "1 "
0
#
#  Case Number 31
1  19038 26044  "1 "   0    # LINE  from  MEAD     500.00 to MARKETPL 500.00  "1 "
0
#
```

```
#  Case Number 32
1  19038 15034  "1 "   0    # LINE  from  MEAD     500.00 to PERKINS  500.00  "1 "
0
#
#  Case Number 33
1  18400 18450  "1 "   0    # LINE  from  RELIANT  500.00 to H ALLEN  500.00  "1 "
0
#
#  Case Number 34
1  18425 18450  "1 "   0    # LINE  from  SLHWK    500.00 to H ALLEN  500.00  "1 "
0
#
#  Case Number 35
1  24042 24086  "1 "   0    # LINE  from  ELDORDO  500.00 to LUGO     500.00  "1 "
0
#
#  Case Number 36
1  24086 24097  "1 "   0    # LINE  from  LUGO     500.00 to MOHAVE   500.00  "1 "
0
#
#  Case Number 37
1  24097 24042  "1 "   0    # LINE  from  MOHAVE   500.00 to ELDORDO  500.00  "1 "
0
#
#  Case Number 38
1  24138 24151  "1 "   0    # LINE  from  SERRANO  500.00 to VALLEYSC 500.00  "1 "
0
#
#  Case Number 39
1  24801 24151  "1 "   0    # LINE  from  DEVERS   500.00 to VALLEYSC 500.00  "1 "
0
#
#  Case Number 40
1  14002 24042  "1 "   0    # LINE  from  MOENKOPI 500.00 to ELDORDO  500.00  "1 "
0
#
#  Case Number 41
1  30060 24156  "1 "   0    # LINE  from  MIDWAY   500.00 to VINCENT  500.00  "1 "
0
#
#  Case Number 42
1  30060 24156  "3 "   0    # LINE  from  MIDWAY   500.00 to VINCENT  500.00  "3 "
0
#
#  Case Number 43
1  24086 26105  "1 "   0    # LINE  from  LUGO     500.00 to VICTORVL 500.00  "1 "
0
#
#  Case Number 44
1  15021 24801  "1 "   0    # LINE  from  PALOVRDE 500.00 to DEVERS   500.00  "1 "
0
#
#  Case Number 45
1  15088 14015  "1 "   0    # LINE  from  PINAL_W  500.00 to SNTAROSA 500.00  "1 "
0
#
#  Case Number 46
1  15090 15088  "1 "   0    # LINE  from  HASSYAMP 500.00 to PINAL_W  500.00  "1 "
0
#
#  Case Number 47
1  15021 14010  "1 "   0    # LINE  from  PALOVRDE 500.00 to TS5      500.00  "1 "
0
#
#  Case Number 48
1  15090 22536  "1 "   0    # LINE  from  HASSYAMP 500.00 to N.GILA   500.00  "1 "
0
#
#  Case Number 49
1  22360 22468  "1 "   0    # LINE  from  IMPRLVLY 500.00 to MIGUEL   500.00  "1 "
```

```
0
#
#  Case Number 50
1  22536 22360  "1 "   0    # LINE  from  N.GILA   500.00 to IMPRLVLY 500.00  "1 "
0
#
#  Case Number 51
1  14003 26123  "1 "   0    # LINE  from  NAVAJO   500.00 to CRYSTAL  500.00  "1 "
0
#
#  Case Number 52
1  26003 26105  "1 "   0    # LINE  from  ADELANTO 500.00 to VICTORVL 500.00  "1 "
0
#
#  Case Number 53
1  26044 26003  "1 "   0    # LINE  from  MARKETPL 500.00 to ADELANTO 500.00  "1 "
0
#
#  Case Number 54
1  26044 26048  "1 "   0    # LINE  from  MARKETPL 500.00 to MCCULLGH 500.00  "1 "
0
#
#  Case Number 55
1  26048 26105  "1 "   0    # LINE  from  MCCULLGH 500.00 to VICTORVL 500.00  "1 "
0
#
#  Case Number 56
1  26105 26062  "1 "   0    # LINE  from  VICTORVL 500.00 to RINALDI  500.00  "1 "
0
#
#  Case Number 57
1  26123 26048  "1 "   0    # LINE  from  CRYSTAL  500.00 to MCCULLGH 500.00  "1 "
0
#
#  Case Number 58
1  24042 26048  "1 "   0    # LINE  from  ELDORDO  500.00 to MCCULLGH 500.00  "1 "
0
#
#  Case Number 59
1  19053 19315  "1 "   0    # LINE  from  LIBERTY  345.00 to PEACOCK  345.00  "1 "
0
#
#  Case Number 60
1  19053 19315  "1 "   0    # LINE  from  LIBERTY  345.00 to PEACOCK  345.00  "1 "
0
#
#  Case Number 61
1  19315 19039  "1 "   0    # LINE  from  PEACOCK  345.00 to WHTHILL  345.00  "1 "
0
#
#  Case Number 62
1  19039 19037  "1 "   0    # LINE  from  WHTHILL  345.00 to MEAD     345.00  "1 "
0
#
#  Case Number 63
1  19039 19037  "1 "   0    # LINE  from  WHTHILL  345.00 to MEAD     345.00  "1 "
0
#
#  Case Number 64
1  79024 79032  "1 "   0    # LINE  from  FLAGSTAF 345.00 to GLENCANY 345.00  "1 "
0
#
#  Case Number 65
1  79024 79032  "2 "   0    # LINE  from  FLAGSTAF 345.00 to GLENCANY 345.00  "2 "
0
#
#  Case Number 66
1  79024 79053  "1 "   0    # LINE  from  FLAGSTAF 345.00 to PINPKBRB 345.00  "1 "
0
#
```

```
#  Case Number 67
1 79024 79053 "1 "   0    # LINE  from  FLAGSTAF 345.00 to PINPKBRB 345.00  "1 "
0
#
#  Case Number 68
1 79024 79053 "2 "   0    # LINE  from  FLAGSTAF 345.00 to PINPKBRB 345.00  "2 "
0
#
#  Case Number 69
1 79064 14101 "1 "   0    # LINE  from  SHIPROCK 345.00 to FOURCORN 345.00  "1 "
0
#
#  Case Number 70
1 24219 24041 "2 "   0    # LINE  from  PISGAH  230.00 to ELDORDO  230.00  "2 "
0
#
#  Case Number 71
1 24627 24041 "1 "   0    # LINE  from  CIMA    230.00 to ELDORDO  230.00  "1 "
0
#
#  Case Number 72
1 22357  8332 "1 "   0    # LINE  from  IVPS    230.00 to ELCENTSW 230.00  "1 "
0
#
#  Case Number 73
1 25406 24806 "1 "   0    # LINE  from  J.HINDS 230.00 to MIRAGE   230.00  "1 "
0
#
#  Case Number 74
1  8311 24804 "1 "   0    # LINE  from  COAHCELA 230.00 to DEVERS  230.00  "1 "
0
#
#  Case Number 75
1  8695 24806 "1 "   0    # LINE  from  RAMON   230.00 to MIRAGE  230.00  "1 "
0
#
#  Case Number 76
1 14204 14215 "1 "   0    # LINE  from  CHOLLA  230.00 to LEUPP   230.00  "1 "
0
#
#  Case Number 77
1 14265 14214 "1 "   0    # LINE  from  TS5     230.00 to HASSYAMP 230.00  "1 "
0
#
#  Case Number 78
1 14265 14254 "1 "   0    # LINE  from  TS5     230.00 to TS1     230.00  "1 "
0
#
#  Case Number 79
1 14254 14255 "1 "   0    # LINE  from  TS1     230.00 to TS2     230.00  "1 "
0
#
#  Case Number 80
1 14255 14252 "1 "   0    # LINE  from  TS2     230.00 to TS3     230.00  "1 "
0
#
#  Case Number 81
1 14258 14252 "1 "   0    # LINE  from  TS4     230.00 to TS3     230.00  "1 "
0
#
#  Case Number 82
1 15230 14252 "1 "   0    # LINE  from  RUDD    230.00 to TS3     230.00  "1 "
0
#
#  Case Number 83
1 14228 14231 "1 "   0    # LINE  from  SURPRISE 230.00 to WESTWING 230.00  "1 "
0
#
#  Case Number 84
1 15201 14231 "1 "   0    # LINE  from  AGUAFRIA 230.00 to WESTWING 230.00  "1 "
```

```
0
#
#  Case Number 85
1  14207 14231  "1 "   0    # LINE  from  DEERVALY 230.00 to WESTWING 230.00  "1 "
0
#
#  Case Number 86
1  19042 25402  "1 "   0    # LINE  from  PARKER   230.00 to GENE     230.00  "1 "
0
#
#  Case Number 87
1  19018 18003  "1 "   0    # LINE  from  BC TAP   230.00 to AMARGOSA 230.00  "1 "
0
#
#  Case Number 88
1  19011 19043  "1 "   0    # LINE  from  MEAD N   230.00 to HVRA3A4  230.00  "1 "
0
#
#  Case Number 89
1  19042 19074  "1 "   0    # LINE  from  PARKER   230.00 to N.HAVASU 230.00  "1 "
0
#
#  Case Number 90
1  14201 19052  "1 "   0    # LINE  from  BUCKEYE  230.00 to LIBERTY  230.00  "1 "
0
#
#  Case Number 91
1  14223 19314  "1 "   0    # LINE  from  ROUNDVLY 230.00 to PEACOCK  230.00  "1 "
1  14222 14223  "1 "   0    # LINE  from  PRESCOTT 230.00 to ROUNDVLY 230.00  "1 "
0
#
#  Case Number 92
1  14231 19062  "1 "   0    # LINE  from  WESTWING 230.00 to PINPK    230.00  "1 "
0
#
#  Case Number 93
1  14235 14238  "1 "   0    # LINE  from  GILABEND 230.00 to GILARIVR 230.00  "1 "
0
#
#  Case Number 94
1  14246 14231  "1 "   0    # LINE  from  RACEWAY  230.00 to WESTWING 230.00  "1 "
0
#
#  Case Number 95
1  15212 19062  "1 "   0    # LINE  from  ROGERS   230.00 to PINPK    230.00  "1 "
0
#
#  Case Number 96
1  15212 19215  "1 "   0    # LINE  from  ROGERS   230.00 to SPOOKHIL 230.00  "1 "
1  19215 19045  "1 "   0    # LINE  from  SPOOKHIL 230.00 to COOLIDGE 230.00  "1 "
0
#
#  Case Number 97
1  18003 18006  "1 "   0    # LINE  from  AMARGOSA 230.00 to HENDRSON 230.00  "1 "
0
#
#  Case Number 98
1  18005 18006  "1 "   0    # LINE  from  BASIC    230.00 to HENDRSON 230.00  "1 "
0
#
#  Case Number 99
1  18006 19011  "1 "   0    # LINE  from  HENDRSON 230.00 to MEAD N   230.00  "1 "
0
#
#  Case Number 100
1  19012 19011  "1 "   0    # LINE  from  MEAD S   230.00 to MEAD N   230.00  "1 "
0
#
#  Case Number 101
1  19018 19011  "1 "   0    # LINE  from  BC TAP   230.00 to MEAD N   230.00  "1 "
```

```
0
#
#  Case Number 102
1  19022 19011  "1 "   0    # LINE  from  DAVIS    230.00 to MEAD N   230.00  "1 "
0
#
#  Case Number 103
1  19022 19320  "2 "   0    # LINE  from  DAVIS    230.00 to TOPOCK   230.00  "2 "
0
#
#  Case Number 104
1  19022 26046  "1 "   0    # LINE  from  DAVIS    230.00 to MCCULLGH 230.00  "1 "
0
#
#  Case Number 105
1  19029 19012  "1 "   0    # LINE  from  HOVRA5A6 230.00 to MEAD S   230.00  "1 "
0
#
#  Case Number 106
1  19030 19012  "1 "   0    # LINE  from  HOVRA7-9 230.00 to MEAD S   230.00  "1 "
0
#
#  Case Number 107
1  19054 19052  "BY"   0    # LINE  from  LIBTYPHS 230.00 to LIBERTY  230.00  "BY"
0
#
#  Case Number 108
1  79063 79061  "BY"   0    # LINE  from  SHIPROCK 230.00 to SHIP PS  230.00  "BY"
0
#
#  Case Number 109
1  19061 19055  "1 "   0    # LINE  from  PHXWAPA  230.00 to LONEBUTT 230.00  "1 "
0
#
#  Case Number 110
1  79028 79031  "BY"   0    # LINE  from  GLEN PS  230.00 to GLENCANY 230.00  "BY"
0
#
#  Case Number 111
1  19022 19130  "1 "   0    # LINE  from  DAVIS    230.00 to ZORB     230.00  "1 "
0
#
#  Case Number 112
1  19130 19320  "1 "   0    # LINE  from  ZORB     230.00 to TOPOCK   230.00  "1 "
0
#
#  Case Number 113
1  19062 14243  "1 "   0    # LINE  from  PINPK    230.00 to GAVILNPK 230.00  "1 "
0
#
#  Case Number 114
1  19042 19019  "1 "   0    # LINE  from  PARKER   230.00 to BLK MESA 230.00  "1 "
0
#
#  Case Number 115
1  19042 19075  "1 "   0    # LINE  from  PARKER   230.00 to HAVASU   230.00  "1 "
0
#
#  Case Number 116
1  19042 19204  "1 "   0    # LINE  from  PARKER   230.00 to HARCUVAR 230.00  "1 "
1  19204 19500  "1 "   0    # LINE  from  HARCUVAR 230.00 to HASSYTAP 230.00  "1 "
1  19500 19052  "1 "   0    # LINE  from  HASSYTAP 230.00 to LIBERTY  230.00  "1 "
0
#
#  Case Number 117
1  19045 19410  "1 "   0    # LINE  from  COOLIDGE 230.00 to SUN ARIZ 230.00  "1 "
0
#
#  Case Number 118
1  19052 14231  "1 "   0    # LINE  from  LIBERTY  230.00 to WESTWING 230.00  "1 "
```

```
0
#
#  Case Number 119
1  19052 19061  "1 "   0    # LINE  from  LIBERTY  230.00 to PHXWAPA  230.00  "1 "
0
#
#  Case Number 120
1  19055 19068  "1 "   0    # LINE  from  LONEBUTT 230.00 to TESTTRAK 230.00  "1 "
0
#
#  Case Number 121
1  19056 19022  "1 "   0    # LINE  from  MCCONICO 230.00 to DAVIS    230.00  "1 "
0
#
#  Case Number 122
1  19056 19310  "1 "   0    # LINE  from  MCCONICO 230.00 to GRIFFITH 230.00  "1 "
0
#
#  Case Number 123
1  19062 15211  "1 "   0    # LINE  from  PINPK    230.00 to PINPKSRP 230.00  "1 "
0
#
#  Case Number 124
1  19072 19056  "1 "   0    # LINE  from  HILLTOP  230.00 to MCCONICO 230.00  "1 "
0
#
#  Case Number 125
1  19079 19012  "1 "   0    # LINE  from  HOVRN7N8 230.00 to MEAD S   230.00  "1 "
0
#
#  Case Number 126
1  19080 19012  "1 "   0    # LINE  from  HOVRN5N6 230.00 to MEAD S   230.00  "1 "
0
#
#  Case Number 127
1  19081 19012  "1 "   0    # LINE  from  HOVRN3N4 230.00 to MEAD S   230.00  "1 "
0
#
#  Case Number 128
1  19082 19012  "1 "   0    # LINE  from  HOVRN1N2 230.00 to MEAD S   230.00  "1 "
0
#
#  Case Number 129
1  19083 19012  "1 "   0    # LINE  from  HOVRA1A2 230.00 to MEAD S   230.00  "1 "
0
#
#  Case Number 130
1  19208 14246  "1 "   0    # LINE  from  N.WADDEL 230.00 to RACEWAY  230.00  "1 "
0
#
#  Case Number 131
1  19310 19314  "1 "   0    # LINE  from  GRIFFITH 230.00 to PEACOCK  230.00  "1 "
0
#
#  Case Number 132
1  19314 19072  "1 "   0    # LINE  from  PEACOCK  230.00 to HILLTOP  230.00  "1 "
0
#
#  Case Number 133
1  19320 19019  "1 "   0    # LINE  from  TOPOCK   230.00 to BLK MESA 230.00  "1 "
0
#
#  Case Number 134
1  19320 19316  "1 "   0    # LINE  from  TOPOCK   230.00 to SOPOINT  230.00  "1 "
0
#
#  Case Number 135
1  79028 79093  "1 "   0    # LINE  from  GLEN PS  230.00 to NAVAJO   230.00  "1 "
0
#
```

```
#  Case Number 136
1  79043 79063  "1 "   0    # LINE  from  KAYENTA  230.00 to SHIPROCK 230.00  "1 "
0
#
#  Case Number 137
1  79043 79096  "1 "   0    # LINE  from  KAYENTA  230.00 to LNGHOUSE 230.00  "1 "
0
#
#  Case Number 138
1  79093 79096  "1 "   0    # LINE  from  NAVAJO   230.00 to LNGHOUSE 230.00  "1 "
0
#
#  Case Number 139
1  19320 19074  "1 "   0    # LINE  from  TOPOCK   230.00 to N.HAVASU 230.00  "1 "
0
#
#  Case Number 140
1  19055 19052  "1 "   0    # LINE  from  LONEBUTT 230.00 to LIBERTY  230.00  "1 "
0
#
#  Case Number 141
1  19055 19410  "1 "   0    # LINE  from  LONEBUTT 230.00 to SUN ARIZ 230.00  "1 "
0
#
#  Case Number 142
1  19068 19218  "1 "   0    # LINE  from  TESTTRAK 230.00 to CASAGRND 230.00  "1 "
0
#
#  Case Number 143
1  18005 18006  "3 "   0    # LINE  from  BASIC    230.00 to HENDRSON 230.00  "3 "
0
#
#  Case Number 144
1  19012 19011  "2 "   0    # LINE  from  MEAD S   230.00 to MEAD N   230.00  "2 "
0
#
#  Case Number 145
1  14243 14222  "1 "   0    # LINE  from  GAVILNPK 230.00 to PRESCOTT 230.00  "1 "
0
#
#  Case Number 146
1  19042 14209  "1 "   0    # LINE  from  PARKER   230.00 to EAGLEYE  230.00  "1 "
1  14209 19910  "1 "   0    # LINE  from  EAGLEYE  230.00 to BUCKEYTP 230.00  "1 "
1  19910 19052  "1 "   0    # LINE  from  BUCKEYTP 230.00 to LIBERTY  230.00  "1 "
0
#
#  Case Number 147
1  19500 14214  "1 "   0    # LINE  from  HASSYTAP 230.00 to HASSYAMP 230.00  "1 "
0
#

#  Case Number 148
1  19020 19101  "1 "   0    # LINE  from  BLYTHE   161.00 to BUCKBLVD 161.00  "1 "
0
#
#  Case Number 149
1  19020 19206  "1 "   0    # LINE  from  BLYTHE   161.00 to HEADGATE 161.00  "1 "
1  19041 19206  "1 "   0    # LINE  from  PARKER   161.00 to HEADGATE 161.00  "1 "
0
#
#  Case Number 150
1  19041 19020  "1 "   0    # LINE  from  PARKER   161.00 to BLYTHE   161.00  "1 "
0
#
#  Case Number 151
1  19041 19046  "1 "   0    # LINE  from  PARKER   161.00 to BOUSE    161.00  "1 "
1  19046 19100  "1 "   0    # LINE  from  BOUSE    161.00 to KOFA     161.00  "1 "
0
#
#  Case Number 152
```

```
1 19020 19105 "1 "  0   # LINE from BLYTHE  161.00 to GOLDMNTP 161.00 "1 "
1 19105 19051 "1 "  0   # LINE from GOLDMNTP 161.00 to KNOB    161.00 "1 "
0
#
#  Case Number 153
1 19050 19051 "1 "  0   # LINE from GILA    161.00 to KNOB    161.00 "1 "
0
#
#  Case Number 154
1 19050 19070 "1 "  0   # LINE from GILA    161.00 to DOME TAP 161.00 "1 "
0
#
#  Case Number 155
1 19063 19050 "1 "  0   # LINE from WLTNMOHK 161.00 to GILA    161.00 "1 "
0
#
#  Case Number 156
1 19063 19070 "1 "  0   # LINE from WLTNMOHK 161.00 to DOME TAP 161.00 "1 "
0
#
#  Case Number 157
1 19100 19070 "1 "  0   # LINE from KOFA    161.00 to DOME TAP 161.00 "1 "
0
#
#  Case Number 158
1 19063 19040 "1 "  0   # LINE from WLTNMOHK 161.00 to DUMWLTN  161.00 "1 "
0
#
#  Case Number 159
1 19044 14359 "1 "  0   # LINE from COOLIDGE 115.00 to VLYFARMS 115.00 "1 "
1 14359 19057 "1 "  0   # LINE from VLYFARMS 115.00 to ORACLE   115.00 "1 "
0
#
#  Case Number 160
1 19044 19065 "1 "  0   # LINE from COOLIDGE 115.00 to ED-2    115.00 "1 "
0
#
#  Case Number 161
1 19044 19066 "1 "  0   # LINE from COOLIDGE 115.00 to SIGNAL   115.00 "1 "
0
#
#  Case Number 162
1 19047 19221 "1 "  0   # LINE from DEL BAC  115.00 to NOGALES  115.00 "1 "
0
#
#  Case Number 163
1 19064 19047 "1 "  0   # LINE from TUCSON   115.00 to DEL BAC  115.00 "1 "
0
#
#  Case Number 164
1 19064 19057 "1 "  0   # LINE from TUCSON   115.00 to ORACLE   115.00 "1 "
0
#
#  Case Number 165
1 19065 19066 "1 "  0   # LINE from ED-2    115.00 to SIGNAL   115.00 "1 "
0
#
#  Case Number 166
1 19065 19071 "1 "  0   # LINE from ED-2    115.00 to ED-4     115.00 "1 "
0
#
#  Case Number 167
1 19065 19202 "1 "  0   # LINE from ED-2    115.00 to BRADY    115.00 "1 "
0
#
#  Case Number 168
1 19071 19067 "1 "  0   # LINE from ED-4    115.00 to ED-5     115.00 "1 "
0
#
#  Case Number 169
```

```
1 19201 19047 "1 "  0   # LINE from BLACKMTN 115.00 to DEL BAC  115.00 "1 "
0
#
#  Case Number 170
1 19202 19209 "1 "  0   # LINE from BRADY   115.00 to PICACHOW 115.00 "1 "
0
#
#  Case Number 171
1 19203 19213 "1 "  0   # LINE from BRAWLEY 115.00 to SANXAVER 115.00 "1 "
0
#
#  Case Number 172
1 19209 19211 "1 "  0   # LINE from PICACHOW 115.00 to RED ROCK 115.00 "1 "
0
#
#  Case Number 173
1 19210 19064 "1 "  0   # LINE from RATTLSNK 115.00 to TUCSON   115.00 "1 "
0
#
#  Case Number 174
1 19210 19216 "1 "  0   # LINE from RATTLSNK 115.00 to TWINPEAK 115.00 "1 "
0
#
#  Case Number 175
1 19211 14356 "1 "  0   # LINE from RED ROCK 115.00 to SAG.EAST 115.00 "1 "
0
#
#  Case Number 176
1 19212 19203 "1 "  0   # LINE from SANDARIO 115.00 to BRAWLEY  115.00 "1 "
0
#
#  Case Number 177
1 19213 19214 "1 "  0   # LINE from SANXAVER 115.00 to SNYDHILL 115.00 "1 "
0
#
#  Case Number 178
1 19214 19201 "1 "  0   # LINE from SNYDHILL 115.00 to BLACKMTN 115.00 "1 "
0
#
#  Case Number 179
1 19216 19212 "1 "  0   # LINE from TWINPEAK 115.00 to SANDARIO 115.00 "1 "
0
#
#  Case Number 180
1 79097 79112 "1 "  0   # LINE from ANIMAS   115.00 to MESA FM  115.00 "1 "
0
#
#  Case Number 181
1 79097 79116 "1 "  0   # LINE from ANIMAS   115.00 to SULLIVAN 115.00 "1 "
0
#
#  Case Number 182
1 79098 79100 "1 "  0   # LINE from BERGIN   115.00 to FOOTHILS 115.00 "1 "
0
#
#  Case Number 183
1 79098 79114 "1 "  0   # LINE from BERGIN   115.00 to SAN JUAN 115.00 "1 "
0
#
#  Case Number 184
1 79100 79106 "1 "  0   # LINE from FOOTHILS 115.00 to HOODMESA 115.00 "1 "
0
#
#  Case Number 185
1 79101 79102 "1 "  0   # LINE from FRUITAP  115.00 to FRUITLND 115.00 "1 "
0
#
#  Case Number 186
1 79101 79106 "1 "  0   # LINE from FRUITAP  115.00 to HOODMESA 115.00 "1 "
0
```

```
#
#  Case Number 187
1  79105 79106  "1 "   0    # LINE  from  GLADETAP 115.00 to HOODMESA 115.00  "1 "
0
#
#  Case Number 188
1  79105 79109  "1 "   0    # LINE  from  GLADETAP 115.00 to LAPLATA  115.00  "1 "
0
#
#  Case Number 189
1  79106 79116  "1 "   0    # LINE  from  HOODMESA 115.00 to SULLIVAN 115.00  "1 "
0
#
#  Case Number 190
1  79113 79114  "1 "   0    # LINE  from  NAVAJO   115.00 to SAN JUAN 115.00  "1 "
0
#
#  Case Number 191
1  79027 79098  "1 "   0    # LINE  from  GALLEGOS 115.00 to BERGIN   115.00  "1 "
0
#
#  Case Number 192
1  79062 79101  "1 "   0    # LINE  from  SHIPROCK 115.00 to FRUITAP  115.00  "1 "
0
#
#  Case Number 193
1  79062 79112  "1 "   0    # LINE  from  SHIPROCK 115.00 to MESA FM  115.00  "1 "
0
#
#  Case Number 194
1  19067 19048  "1 "   0    # LINE  from  ED-5     115.00 to EMPIRE   115.00  "1 "
0
#
#  Case Number 195
1  14357 19067  "2 "   0    # LINE  from  SAG.WEST 115.00 to ED-5     115.00  "2 "
0
#
#  Case Number 196
1  19222 19225  "1 "   0    # LINE  from  CASAGRND 115.00 to THORNTON 115.00  "1 "
0
#
#  Case Number 197
1  14350 17001  "1 "   0    # LINE  from  ADAMS    115.00 to APACHE   115.00  "1 "
0
#
#  Case Number 198
1  14350 19221  "1 "   0    # LINE  from  ADAMS    115.00 to NOGALES  115.00  "1 "
0
#
#  Case Number 199
1  14356 19057  "1 "   0    # LINE  from  SAG.EAST 115.00 to ORACLE   115.00  "1 "
0
#
#  Case Number 200
1  14357 19067  "1 "   0    # LINE  from  SAG.WEST 115.00 to ED-5     115.00  "1 "
0
#
#  Case Number 201
1  14356 17013  "1 "   0    # LINE  from  SAG.EAST 115.00 to MARANATP 115.00  "1 "
0
#
#  Case Number 202
1  17013 19210  "1 "   0    # LINE  from  MARANATP 115.00 to RATTLSNK 115.00  "1 "
0
#
#  Case Number 203
1  19225 19048  "1 "   0    # LINE  from  THORNTON 115.00 to EMPIRE   115.00  "1 "
0
#
#  Case Number 204
```

```
1 84836 19049 "1 "   0   # LINE from N.GILA   69.00 to GILA    69.00 "1 "
0
#
#  Case Number 205
1 84841 19049 "1 "   0   # LINE from SONORA   69.00 to GILA    69.00 "1 "
0
#
##########################################################################################
#
#  Case Number 206
2 14000 14100 "1 "   0   # TRAN from CHOLLA   500.00 to CHOLLA  345.00 "1 "
0
#
#  Case Number 207
2 14000 14100 "2 "   0   # TRAN from CHOLLA   500.00 to CHOLLA  345.00 "2 "
0
#
#  Case Number 208
2 14001 14101 "1 "   0   # TRAN from FOURCORN 500.00 to FOURCORN 345.00 "1 "
0
#
#  Case Number 209
2 14002 14006 "1 "   0   # TRAN from MOENKOPI 500.00 to YAVAPAI 500.00 "1 "
0
#
#  Case Number 210
2 14005 16107 "1 "   0   # TRAN from WESTWING 500.00 to WESTWING 345.00 "1 "
0
#
#  Case Number 211
2 14005 14231 "1 "   0   # TRAN from WESTWING 500.00 to WESTWING 230.00 "1 "
0
#
#  Case Number 212
2 15088 16114 "1 "   0   # TRAN from PINAL_W  500.00 to PINALWES 345.00 "1 "
0
#
#  Case Number 213
2 14225 14356 "1 "   0   # TRAN from SAGUARO  230.00 to SAG.EAST 115.00 "1 "
0
#
#  Case Number 214
2 14225 14357 "1 "   0   # TRAN from SAGUARO  230.00 to SAG.WEST 115.00 "1 "
0
#
#  Case Number 215
2 19037 19011 "1 "   0   # TRAN from MEAD    345.00 to MEAD N   230.00 "1 "
0
#
#  Case Number 216
2 19038 19011 "1 "   0   # TRAN from MEAD    500.00 to MEAD N   230.00 "1 "
0
#
#  Case Number 217
2 19053 19054 "1 "   0   # TRAN from LIBERTY  345.00 to LIBTYPHS 230.00 "1 "
0
#
#  Case Number 218
2 19054 19052 "1 "   0   # TRAN from LIBTYPHS 230.00 to LIBERTY  230.00 "1 "
0
#
#  Case Number 219
2 18003 18030 "1 "   0   # TRAN from AMARGOSA 230.00 to AMARGOSA 138.00 "1 "
0
#
#  Case Number 220
2 19001 19022 "1 "   0   # TRAN from DAVISG1   13.80 to DAVIS    230.00 "1 "
0
#
#  Case Number 221
```

```
2 19006 19041 "1 "  0   # TRAN from PARKERG1  6.90 to PARKER  161.00 "1 "
0
#
#  Case Number 222
2 19012 18173 "1 "  0   # TRAN from MEAD S  230.00 to MEAD B   69.00 "1 "
0
#
#  Case Number 223
2 19012 18174 "1 "  0   # TRAN from MEAD S  230.00 to MEAD A   69.00 "1 "
0
#
#  Case Number 224
2 19019 14401 "1 "  0   # TRAN from BLK MESA 230.00 to BLK MESA  69.00 "1 "
0
#
#  Case Number 225
2 19032 19082 "1 "  0   # TRAN from HOVRN1N2  16.50 to HOVRN1N2 230.00 "1 "
0
#
#  Case Number 226
2 19033 19081 "1 "  0   # TRAN from HOVRN3N4  16.50 to HOVRN3N4 230.00 "1 "
0
#
#  Case Number 227
2 19041 19042 "1 "  0   # TRAN from PARKER  161.00 to PARKER  230.00 "1 "
0
#
#  Case Number 228
2 19041 19042 "2 "  0   # TRAN from PARKER  161.00 to PARKER  230.00 "2 "
0
#
#  Case Number 229
2 19045 19044 "1 "  0   # TRAN from COOLIDGE 230.00 to COOLIDGE 115.00 "1 "
0
#
#  Case Number 230
2 19045 19044 "2 "  0   # TRAN from COOLIDGE 230.00 to COOLIDGE 115.00 "2 "
0
#
#  Case Number 231
2 19050 19049 "1 "  0   # TRAN from GILA    161.00 to GILA     69.00 "1 "
0
#
#  Case Number 232
2 19058 19059 "1 "  0   # TRAN from PHXWAPA  100.00 to PHXWAPA  115.00 "1 "
0
#
#  Case Number 233
2 19058 19060 "1 "  0   # TRAN from PHXWAPA  100.00 to PHXWAPA   12.50 "1 "
0
#
#  Case Number 234
2 19061 19058 "1 "  0   # TRAN from PHXWAPA  230.00 to PHXWAPA  100.00 "1 "
0
#
#  Case Number 235
2 19076 19075 "1 "  0   # TRAN from HAVASU12  13.20 to HAVASU   230.00 "1 "
0
#
#  Case Number 236
2 19077 19075 "1 "  0   # TRAN from HAVASU34  13.20 to HAVASU   230.00 "1 "
0
#
#  Case Number 237
2 19078 19075 "1 "  0   # TRAN from HAVASU56  13.20 to HAVASU   230.00 "1 "
0
#
#  Case Number 238
2 19101 19322 "1 "  0   # TRAN from BUCKBLVD 161.00 to BLYENG1   16.00 "1 "
0
```

```
#
#  Case Number 239
2  19300 19208  "1 "   0    # TRAN  from  WADDEL23  13.80 to N.WADDEL 230.00  "1 "
0
#
#  Case Number 240
2  19301 19208  "1 "   0    # TRAN  from  WADDEL67  13.80 to N.WADDEL 230.00  "1 "
0
#
#  Case Number 241
2  19304 19206  "1 "   0    # TRAN  from  HEADGATE  69.00 to HEADGATE 161.00  "1 "
0
#
#  Case Number 242
2  19304 19206  "2 "   0    # TRAN  from  HEADGATE  69.00 to HEADGATE 161.00  "2 "
0
#
#  Case Number 243
2  19305 19304  "1 "   0    # TRAN  from  HEADGAT1   4.16 to HEADGATE  69.00  "1 "
0
#
#  Case Number 244
2  19310 19311  "1 "   0    # TRAN  from  GRIFFITH 230.00 to GRIFFTH1  16.00  "1 "
0
#
#  Case Number 245
2  19315 19314  "1 "   0    # TRAN  from  PEACOCK  345.00 to PEACOCK  230.00  "1 "
0
#
#  Case Number 246
2  19316 19319  "3 "   0    # TRAN  from  SOPOINT  230.00 to SOPOINT3  16.00  "3 "
0
#
#  Case Number 247
2  19410 19411  "1 "   0    # TRAN  from  SUN ARIZ 230.00 to SUN G1    13.80  "1 "
0
#
#  Case Number 248
2  79028 79031  "1 "   0    # TRAN  from  GLEN PS  230.00 to GLENCANY 230.00  "1 "
0
#
#  Case Number 249
2  79032 79031  "1 "   0    # TRAN  from  GLENCANY 345.00 to GLENCANY 230.00  "1 "
0
#
#  Case Number 250
2  79032 79031  "2 "   0    # TRAN  from  GLENCANY 345.00 to GLENCANY 230.00  "2 "
0
#
#  Case Number 251
2  79053 19062  "1 "   0    # TRAN  from  PINPKBRB 345.00 to PINPK    230.00  "1 "
0
#
#  Case Number 252
2  79053 19062  "2 "   0    # TRAN  from  PINPKBRB 345.00 to PINPK    230.00  "2 "
0
#
#  Case Number 253
2  79053 19062  "3 "   0    # TRAN  from  PINPKBRB 345.00 to PINPK    230.00  "3 "
0
#
#  Case Number 254
2  79063 79062  "1 "   0    # TRAN  from  SHIPROCK 230.00 to SHIPROCK 115.00  "1 "
0
#
#  Case Number 255
2  79064 79063  "1 "   0    # TRAN  from  SHIPROCK 345.00 to SHIPROCK 230.00  "1 "
0
#
#  Case Number 256
```

```
2 79150 79032 "1 "   0   # TRAN from GLENC1-2 13.80 to GLENCANY 345.00 "1 "
0
#
#  Case Number 257
2 19038 19011 "2 "   0   # TRAN from MEAD    500.00 to MEAD N  230.00 "2 "
0
#
#  Case Number 258
2 19023 19043 "1 "   0   # TRAN from HOOVERA3 16.50 to HVRA3A4 230.00 "1 "
0
#
#  Case Number 259
2 19074 19073 "1 "   0   # TRAN from N.HAVASU 230.00 to N.HAVASU 69.00 "1 "
0
#
#  Case Number 260
2 19068 19217 "1 "   0   # TRAN from TESTTRAK 230.00 to TESTTRAK 69.00 "1 "
0
#
#  Case Number 261
2 19218 19222 "1 "   0   # TRAN from CASAGRND 230.00 to CASAGRND 115.00 "1 "
0
#
###################### PROJECT CONTINGENCIES ########################################
#
#  Case Number 262
2 19310 19602 "1 "   0   # TRAN from GRIFFITH 230.00 to GRIFFTH5 13.80 "1 "
0
#
#
-1
# EOF
```

NERC/WECC Category "C" Contingencies

```
#  Base Case -- Case Number 0
0
#
#  Case Number 1
1  19053 19315 "1"   0    # LINE  from  LIBERTY  345.00 to PEACOCK  345.00
1  19315 19039 "1"   0    # LINE  from  PEACOCK  345.00 to WHTHILL  345.00
0
#
#  Case Number 2
1  19053 19315 "1"   0    # LINE  from  LIBERTY  345.00 to PEACOCK  345.00
1  19039 19037 "1"   0    # LINE  from  WHTHILL  345.00 to MEAD     345.00
0
#
#  Case Number 3
1  19053 19315 "1"   0    # LINE  from  LIBERTY  345.00 to PEACOCK  345.00
2  19315 19314 "1"   0    # TRAN  from  PEACOCK  345.00 to PEACOCK  230.00
0
#
#  Case Number 4
1  19053 19315 "1"   0    # LINE  from  LIBERTY  345.00 to PEACOCK  345.00
1  19056 19022 "1"   0    # LINE  from  MCCONICO 230.00 to DAVIS    230.00
0
#
#  Case Number 5
1  19053 19315 "1"   0    # LINE  from  LIBERTY  345.00 to PEACOCK  345.00
1  19072 19056 "1"   0    # LINE  from  HILLTOP  230.00 to MCCONICO 230.00
0
#
#  Case Number 6
1  19053 19315 "1"   0    # LINE  from  LIBERTY  345.00 to PEACOCK  345.00
1  19056 19310 "1"   0    # LINE  from  MCCONICO 230.00 to GRIFFITH 230.00
0
#
#  Case Number 7
1  19053 19315 "1"   0    # LINE  from  LIBERTY  345.00 to PEACOCK  345.00
1  19310 19314 "1"   0    # LINE  from  GRIFFITH 230.00 to PEACOCK  230.00
0
#
#  Case Number 8
1  19053 19315 "1"   0    # LINE  from  LIBERTY  345.00 to PEACOCK  345.00
1  19314 19072 "1"   0    # LINE  from  PEACOCK  230.00 to HILLTOP  230.00
0
#
#  Case Number 9
1  19053 19315 "1"   0    # LINE  from  LIBERTY  345.00 to PEACOCK  345.00
1  19022 19011 "1"   0    # LINE  from  DAVIS    230.00 to MEAD N   230.00
0
#
#  Case Number 10
1  19053 19315 "1"   0    # LINE  from  LIBERTY  345.00 to PEACOCK  345.00
1  19022 26046 "1"   0    # LINE  from  DAVIS    230.00 to MCCULLGH 230.00
0
#
#  Case Number 11
1  19053 19315 "1"   0    # LINE  from  LIBERTY  345.00 to PEACOCK  345.00
1  19022 19130 "1"   0    # LINE  from  DAVIS    230.00 to ZORB     230.00
0
#
#  Case Number 12
1  19053 19315 "1"   0    # LINE  from  LIBERTY  345.00 to PEACOCK  345.00
1  19130 19320 "1"   0    # LINE  from  ZORB     230.00 to TOPOCK   230.00
0
#
#  Case Number 13
1  19053 19315 "1"   0    # LINE  from  LIBERTY  345.00 to PEACOCK  345.00
1  19022 19320 "2"   0    # LINE  from  DAVIS    230.00 to TOPOCK   230.00
0
#
```

```
#  Case Number 14
1  19053 19315 "1"   0   # LINE  from  LIBERTY  345.00 to PEACOCK  345.00
1  19320 19316 "1"   0   # LINE  from  TOPOCK   230.00 to SOPOINT  230.00
0
#
#  Case Number 15
1  19053 19315 "1"   0   # LINE  from  LIBERTY  345.00 to PEACOCK  345.00
1  19320 19316 "2"   0   # LINE  from  TOPOCK   230.00 to SOPOINT  230.00
0
#
#  Case Number 16
1  19053 19315 "1"   0   # LINE  from  LIBERTY  345.00 to PEACOCK  345.00
1  19320 19019 "1"   0   # LINE  from  TOPOCK   230.00 to BLK MESA 230.00
0
#
#  Case Number 17
1  19053 19315 "1"   0   # LINE  from  LIBERTY  345.00 to PEACOCK  345.00
1  19320 19074 "1"   0   # LINE  from  TOPOCK   230.00 to N.HAVASU 230.00
0
#
#  Case Number 18
1  19053 19315 "1"   0   # LINE  from  LIBERTY  345.00 to PEACOCK  345.00
1  19052 14231 "1"   0   # LINE  from  LIBERTY  230.00 to WESTWING 230.00
0
#
#  Case Number 19
1  19053 19315 "1"   0   # LINE  from  LIBERTY  345.00 to PEACOCK  345.00
1  19012 19011 "1"   0   # LINE  from  MEAD S   230.00 to MEAD N   230.00
0
#
#  Case Number 20
1  19053 19315 "1"   0   # LINE  from  LIBERTY  345.00 to PEACOCK  345.00
1  19012 19011 "2"   0   # LINE  from  MEAD S   230.00 to MEAD N   230.00
0
#
#  Case Number 21
1  19053 19315 "1"   0   # LINE  from  LIBERTY  345.00 to PEACOCK  345.00
2  19037 19011 "1"   0   # TRAN  from  MEAD     345.00 to MEAD N   230.00
0
#
#  Case Number 22
1  19315 19039 "1"   0   # LINE  from  PEACOCK  345.00 to WHTHILL  345.00
1  19039 19037 "1"   0   # LINE  from  WHTHILL  345.00 to MEAD     345.00
0
#
#  Case Number 23
1  19315 19039 "1"   0   # LINE  from  PEACOCK  345.00 to WHTHILL  345.00
2  19315 19314 "1"   0   # TRAN  from  PEACOCK  345.00 to PEACOCK  230.00
0
#
#  Case Number 24
1  19315 19039 "1"   0   # LINE  from  PEACOCK  345.00 to WHTHILL  345.00
1  19056 19022 "1"   0   # LINE  from  MCCONICO 230.00 to DAVIS    230.00
0
#
#  Case Number 25
1  19315 19039 "1"   0   # LINE  from  PEACOCK  345.00 to WHTHILL  345.00
1  19072 19056 "1"   0   # LINE  from  HILLTOP  230.00 to MCCONICO 230.00
0
#
#  Case Number 26
1  19315 19039 "1"   0   # LINE  from  PEACOCK  345.00 to WHTHILL  345.00
1  19056 19310 "1"   0   # LINE  from  MCCONICO 230.00 to GRIFFITH 230.00
0
#
#  Case Number 27
1  19315 19039 "1"   0   # LINE  from  PEACOCK  345.00 to WHTHILL  345.00
1  19310 19314 "1"   0   # LINE  from  GRIFFITH 230.00 to PEACOCK  230.00
0
#
```

```
#  Case Number 28
1  19315 19039 "1"   0   # LINE  from  PEACOCK  345.00 to WHTHILL  345.00
1  19314 19072 "1"   0   # LINE  from  PEACOCK  230.00 to HILLTOP  230.00
0
#
#  Case Number 29
1  19315 19039 "1"   0   # LINE  from  PEACOCK  345.00 to WHTHILL  345.00
1  19022 19011 "1"   0   # LINE  from  DAVIS    230.00 to MEAD N   230.00
0
#
#  Case Number 30
1  19315 19039 "1"   0   # LINE  from  PEACOCK  345.00 to WHTHILL  345.00
1  19022 26046 "1"   0   # LINE  from  DAVIS    230.00 to MCCULLGH 230.00
0
#
#  Case Number 31
1  19315 19039 "1"   0   # LINE  from  PEACOCK  345.00 to WHTHILL  345.00
1  19022 19130 "1"   0   # LINE  from  DAVIS    230.00 to ZORB     230.00
0
#
#  Case Number 32
1  19315 19039 "1"   0   # LINE  from  PEACOCK  345.00 to WHTHILL  345.00
1  19130 19320 "1"   0   # LINE  from  ZORB     230.00 to TOPOCK   230.00
0
#
#  Case Number 33
1  19315 19039 "1"   0   # LINE  from  PEACOCK  345.00 to WHTHILL  345.00
1  19022 19320 "2"   0   # LINE  from  DAVIS    230.00 to TOPOCK   230.00
0
#
#  Case Number 34
1  19315 19039 "1"   0   # LINE  from  PEACOCK  345.00 to WHTHILL  345.00
1  19320 19316 "1"   0   # LINE  from  TOPOCK   230.00 to SOPOINT  230.00
0
#
#  Case Number 35
1  19315 19039 "1"   0   # LINE  from  PEACOCK  345.00 to WHTHILL  345.00
1  19320 19316 "2"   0   # LINE  from  TOPOCK   230.00 to SOPOINT  230.00
0
#
#  Case Number 36
1  19315 19039 "1"   0   # LINE  from  PEACOCK  345.00 to WHTHILL  345.00
1  19320 19019 "1"   0   # LINE  from  TOPOCK   230.00 to BLK MESA 230.00
0
#
#  Case Number 37
1  19315 19039 "1"   0   # LINE  from  PEACOCK  345.00 to WHTHILL  345.00
1  19320 19074 "1"   0   # LINE  from  TOPOCK   230.00 to N.HAVASU 230.00
0
#
#  Case Number 38
1  19315 19039 "1"   0   # LINE  from  PEACOCK  345.00 to WHTHILL  345.00
1  19052 14231 "1"   0   # LINE  from  LIBERTY  230.00 to WESTWING 230.00
0
#
#  Case Number 39
1  19315 19039 "1"   0   # LINE  from  PEACOCK  345.00 to WHTHILL  345.00
1  19012 19011 "1"   0   # LINE  from  MEAD S   230.00 to MEAD N   230.00
0
#
#  Case Number 40
1  19315 19039 "1"   0   # LINE  from  PEACOCK  345.00 to WHTHILL  345.00
1  19012 19011 "2"   0   # LINE  from  MEAD S   230.00 to MEAD N   230.00
0
#
#  Case Number 41
1  19315 19039 "1"   0   # LINE  from  PEACOCK  345.00 to WHTHILL  345.00
2  19037 19011 "1"   0   # TRAN  from  MEAD     345.00 to MEAD N   230.00
0
#
```

```
#  Case Number 42
1  19039 19037 "1"   0    # LINE  from  WHTHILL  345.00 to MEAD    345.00
2  19315 19314 "1"   0    # TRAN  from  PEACOCK  345.00 to PEACOCK  230.00
0
#
#  Case Number 43
1  19039 19037 "1"   0    # LINE  from  WHTHILL  345.00 to MEAD    345.00
1  19056 19022 "1"   0    # LINE  from  MCCONICO 230.00 to DAVIS   230.00
0
#
#  Case Number 44
1  19039 19037 "1"   0    # LINE  from  WHTHILL  345.00 to MEAD    345.00
1  19072 19056 "1"   0    # LINE  from  HILLTOP  230.00 to MCCONICO 230.00
0
#
#  Case Number 45
1  19039 19037 "1"   0    # LINE  from  WHTHILL  345.00 to MEAD    345.00
1  19056 19310 "1"   0    # LINE  from  MCCONICO 230.00 to GRIFFITH 230.00
0
#
#  Case Number 46
1  19039 19037 "1"   0    # LINE  from  WHTHILL  345.00 to MEAD    345.00
1  19310 19314 "1"   0    # LINE  from  GRIFFITH 230.00 to PEACOCK  230.00
0
#
#  Case Number 47
1  19039 19037 "1"   0    # LINE  from  WHTHILL  345.00 to MEAD    345.00
1  19314 19072 "1"   0    # LINE  from  PEACOCK  230.00 to HILLTOP  230.00
0
#
#  Case Number 48
1  19039 19037 "1"   0    # LINE  from  WHTHILL  345.00 to MEAD    345.00
1  19022 19011 "1"   0    # LINE  from  DAVIS    230.00 to MEAD N   230.00
0
#
#  Case Number 49
1  19039 19037 "1"   0    # LINE  from  WHTHILL  345.00 to MEAD    345.00
1  19022 26046 "1"   0    # LINE  from  DAVIS    230.00 to MCCULLGH 230.00
0
#
#  Case Number 50
1  19039 19037 "1"   0    # LINE  from  WHTHILL  345.00 to MEAD    345.00
1  19022 19130 "1"   0    # LINE  from  DAVIS    230.00 to ZORB     230.00
0
#
#  Case Number 51
1  19039 19037 "1"   0    # LINE  from  WHTHILL  345.00 to MEAD    345.00
1  19130 19320 "1"   0    # LINE  from  ZORB     230.00 to TOPOCK   230.00
0
#
#  Case Number 52
1  19039 19037 "1"   0    # LINE  from  WHTHILL  345.00 to MEAD    345.00
1  19022 19320 "2"   0    # LINE  from  DAVIS    230.00 to TOPOCK   230.00
0
#
#  Case Number 53
1  19039 19037 "1"   0    # LINE  from  WHTHILL  345.00 to MEAD    345.00
1  19320 19316 "1"   0    # LINE  from  TOPOCK   230.00 to SOPOINT  230.00
0
#
#  Case Number 54
1  19039 19037 "1"   0    # LINE  from  WHTHILL  345.00 to MEAD    345.00
1  19320 19316 "2"   0    # LINE  from  TOPOCK   230.00 to SOPOINT  230.00
0
#
#  Case Number 55
1  19039 19037 "1"   0    # LINE  from  WHTHILL  345.00 to MEAD    345.00
1  19320 19019 "1"   0    # LINE  from  TOPOCK   230.00 to BLK MESA 230.00
0
#
```

```
#  Case Number 56
1  19039 19037 "1"   0   # LINE  from  WHTHILL  345.00 to MEAD    345.00
1  19320 19074 "1"   0   # LINE  from  TOPOCK   230.00 to N.HAVASU 230.00
0
#
#  Case Number 57
1  19039 19037 "1"   0   # LINE  from  WHTHILL  345.00 to MEAD    345.00
1  19052 14231 "1"   0   # LINE  from  LIBERTY  230.00 to WESTWING 230.00
0
#
#  Case Number 58
1  19039 19037 "1"   0   # LINE  from  WHTHILL  345.00 to MEAD    345.00
1  19012 19011 "1"   0   # LINE  from  MEAD S   230.00 to MEAD N   230.00
0
#
#  Case Number 59
1  19039 19037 "1"   0   # LINE  from  WHTHILL  345.00 to MEAD    345.00
1  19012 19011 "2"   0   # LINE  from  MEAD S   230.00 to MEAD N   230.00
0
#
#  Case Number 60
1  19039 19037 "1"   0   # LINE  from  WHTHILL  345.00 to MEAD    345.00
2  19037 19011 "1"   0   # TRAN  from  MEAD     345.00 to MEAD N   230.00
0
#
#  Case Number 61
2  19315 19314 "1"   0   # TRAN  from  PEACOCK  345.00 to PEACOCK  230.00
1  19056 19022 "1"   0   # LINE  from  MCCONICO 230.00 to DAVIS    230.00
0
#
#  Case Number 62
2  19315 19314 "1"   0   # TRAN  from  PEACOCK  345.00 to PEACOCK  230.00
1  19072 19056 "1"   0   # LINE  from  HILLTOP  230.00 to MCCONICO 230.00
0
#
#  Case Number 63
2  19315 19314 "1"   0   # TRAN  from  PEACOCK  345.00 to PEACOCK  230.00
1  19056 19310 "1"   0   # LINE  from  MCCONICO 230.00 to GRIFFITH 230.00
0
#
#  Case Number 64
2  19315 19314 "1"   0   # TRAN  from  PEACOCK  345.00 to PEACOCK  230.00
1  19310 19314 "1"   0   # LINE  from  GRIFFITH 230.00 to PEACOCK  230.00
0
#
#  Case Number 65
2  19315 19314 "1"   0   # TRAN  from  PEACOCK  345.00 to PEACOCK  230.00
1  19314 19072 "1"   0   # LINE  from  PEACOCK  230.00 to HILLTOP  230.00
0
#
#  Case Number 66
2  19315 19314 "1"   0   # TRAN  from  PEACOCK  345.00 to PEACOCK  230.00
1  19022 19011 "1"   0   # LINE  from  DAVIS    230.00 to MEAD N   230.00
0
#
#  Case Number 67
2  19315 19314 "1"   0   # TRAN  from  PEACOCK  345.00 to PEACOCK  230.00
1  19022 26046 "1"   0   # LINE  from  DAVIS    230.00 to MCCULLGH 230.00
0
#
#  Case Number 68
2  19315 19314 "1"   0   # TRAN  from  PEACOCK  345.00 to PEACOCK  230.00
1  19022 19130 "1"   0   # LINE  from  DAVIS    230.00 to ZORB     230.00
0
#
#  Case Number 69
2  19315 19314 "1"   0   # TRAN  from  PEACOCK  345.00 to PEACOCK  230.00
1  19130 19320 "1"   0   # LINE  from  ZORB     230.00 to TOPOCK   230.00
0
#
```

```
#  Case Number 70
2 19315 19314 "1"   0   # TRAN from PEACOCK 345.00 to PEACOCK 230.00
1 19022 19320 "2"   0   # LINE from DAVIS   230.00 to TOPOCK  230.00
0
#
#  Case Number 71
2 19315 19314 "1"   0   # TRAN from PEACOCK 345.00 to PEACOCK 230.00
1 19320 19316 "1"   0   # LINE from TOPOCK  230.00 to SOPOINT 230.00
0
#
#  Case Number 72
2 19315 19314 "1"   0   # TRAN from PEACOCK 345.00 to PEACOCK 230.00
1 19320 19316 "2"   0   # LINE from TOPOCK  230.00 to SOPOINT 230.00
0
#
#  Case Number 73
2 19315 19314 "1"   0   # TRAN from PEACOCK 345.00 to PEACOCK 230.00
1 19320 19019 "1"   0   # LINE from TOPOCK  230.00 to BLK MESA 230.00
0
#
#  Case Number 74
2 19315 19314 "1"   0   # TRAN from PEACOCK 345.00 to PEACOCK 230.00
1 19320 19074 "1"   0   # LINE from TOPOCK  230.00 to N.HAVASU 230.00
0
#
#  Case Number 75
2 19315 19314 "1"   0   # TRAN from PEACOCK 345.00 to PEACOCK 230.00
1 19052 14231 "1"   0   # LINE from LIBERTY 230.00 to WESTWING 230.00
0
#
#  Case Number 76
2 19315 19314 "1"   0   # TRAN from PEACOCK 345.00 to PEACOCK 230.00
1 19012 19011 "1"   0   # LINE from MEAD S  230.00 to MEAD N  230.00
0
#
#  Case Number 77
2 19315 19314 "1"   0   # TRAN from PEACOCK 345.00 to PEACOCK 230.00
1 19012 19011 "2"   0   # LINE from MEAD S  230.00 to MEAD N  230.00
0
#
#  Case Number 78
2 19315 19314 "1"   0   # TRAN from PEACOCK 345.00 to PEACOCK 230.00
2 19037 19011 "1"   0   # LINE from MEAD    345.00 to MEAD N  230.00
0
#
#  Case Number 79
1 19056 19022 "1"   0   # LINE from MCCONICO 230.00 to DAVIS   230.00
1 19072 19056 "1"   0   # LINE from HILLTOP  230.00 to MCCONICO 230.00
0
#
#  Case Number 80
1 19056 19022 "1"   0   # LINE from MCCONICO 230.00 to DAVIS   230.00
1 19056 19310 "1"   0   # LINE from MCCONICO 230.00 to GRIFFITH 230.00
0
#
#  Case Number 81
1 19056 19022 "1"   0   # LINE from MCCONICO 230.00 to DAVIS   230.00
1 19310 19314 "1"   0   # LINE from GRIFFITH 230.00 to PEACOCK  230.00
0
#
#  Case Number 82
1 19056 19022 "1"   0   # LINE from MCCONICO 230.00 to DAVIS   230.00
1 19314 19072 "1"   0   # LINE from PEACOCK  230.00 to HILLTOP  230.00
0
#
#  Case Number 83
1 19056 19022 "1"   0   # LINE from MCCONICO 230.00 to DAVIS   230.00
1 19022 19011 "1"   0   # LINE from DAVIS    230.00 to MEAD N  230.00
0
#
```

```
#  Case Number 84
1  19056 19022 "1"   0    # LINE  from  MCCONICO 230.00 to DAVIS    230.00
1  19022 26046 "1"   0    # LINE  from  DAVIS    230.00 to MCCULLGH 230.00
0
#
#  Case Number 85
1  19056 19022 "1"   0    # LINE  from  MCCONICO 230.00 to DAVIS    230.00
1  19022 19130 "1"   0    # LINE  from  DAVIS    230.00 to ZORB     230.00
0
#
#  Case Number 86
1  19056 19022 "1"   0    # LINE  from  MCCONICO 230.00 to DAVIS    230.00
1  19130 19320 "1"   0    # LINE  from  ZORB     230.00 to TOPOCK   230.00
0
#
#  Case Number 87
1  19056 19022 "1"   0    # LINE  from  MCCONICO 230.00 to DAVIS    230.00
1  19022 19320 "2"   0    # LINE  from  DAVIS    230.00 to TOPOCK   230.00
0
#
#  Case Number 88
1  19056 19022 "1"   0    # LINE  from  MCCONICO 230.00 to DAVIS    230.00
1  19320 19316 "1"   0    # LINE  from  TOPOCK   230.00 to SOPOINT  230.00
0
#
#  Case Number 89
1  19056 19022 "1"   0    # LINE  from  MCCONICO 230.00 to DAVIS    230.00
1  19320 19316 "2"   0    # LINE  from  TOPOCK   230.00 to SOPOINT  230.00
0
#
#  Case Number 90
1  19056 19022 "1"   0    # LINE  from  MCCONICO 230.00 to DAVIS    230.00
1  19320 19019 "1"   0    # LINE  from  TOPOCK   230.00 to BLK MESA 230.00
0
#
#  Case Number 91
1  19056 19022 "1"   0    # LINE  from  MCCONICO 230.00 to DAVIS    230.00
1  19320 19074 "1"   0    # LINE  from  TOPOCK   230.00 to N.HAVASU 230.00
0
#
#  Case Number 92
1  19056 19022 "1"   0    # LINE  from  MCCONICO 230.00 to DAVIS    230.00
1  19052 14231 "1"   0    # LINE  from  LIBERTY  230.00 to WESTWING 230.00
0
#
#  Case Number 93
1  19056 19022 "1"   0    # LINE  from  MCCONICO 230.00 to DAVIS    230.00
1  19012 19011 "1"   0    # LINE  from  MEAD S   230.00 to MEAD N   230.00
0
#
#  Case Number 94
1  19056 19022 "1"   0    # LINE  from  MCCONICO 230.00 to DAVIS    230.00
1  19012 19011 "2"   0    # LINE  from  MEAD S   230.00 to MEAD N   230.00
0
#
#  Case Number 95
1  19056 19022 "1"   0    # LINE  from  MCCONICO 230.00 to DAVIS    230.00
2  19037 19011 "1"   0    # TRAN  from  MEAD     345.00 to MEAD N   230.00
0
#
#  Case Number 96
1  19072 19056 "1"   0    # LINE  from  HILLTOP  230.00 to MCCONICO 230.00
1  19056 19310 "1"   0    # LINE  from  MCCONICO 230.00 to GRIFFITH 230.00
0
#
#  Case Number 97
1  19072 19056 "1"   0    # LINE  from  HILLTOP  230.00 to MCCONICO 230.00
1  19310 19314 "1"   0    # LINE  from  GRIFFITH 230.00 to PEACOCK  230.00
0
#
```

```
#  Case Number 98
1 19072 19056 "1"   0   # LINE  from  HILLTOP  230.00 to MCCONICO 230.00
1 19314 19072 "1"   0   # LINE  from  PEACOCK  230.00 to HILLTOP  230.00
0
#
#  Case Number 99
1 19072 19056 "1"   0   # LINE  from  HILLTOP  230.00 to MCCONICO 230.00
1 19022 19011 "1"   0   # LINE  from  DAVIS    230.00 to MEAD N   230.00
0
#
#  Case Number 100
1 19072 19056 "1"   0   # LINE  from  HILLTOP  230.00 to MCCONICO 230.00
1 19022 26046 "1"   0   # LINE  from  DAVIS    230.00 to MCCULLGH 230.00
0
#
#  Case Number 101
1 19072 19056 "1"   0   # LINE  from  HILLTOP  230.00 to MCCONICO 230.00
1 19022 19130 "1"   0   # LINE  from  DAVIS    230.00 to ZORB     230.00
0
#
#  Case Number 102
1 19072 19056 "1"   0   # LINE  from  HILLTOP  230.00 to MCCONICO 230.00
1 19130 19320 "1"   0   # LINE  from  ZORB     230.00 to TOPOCK   230.00
0
#
#  Case Number 103
1 19072 19056 "1"   0   # LINE  from  HILLTOP  230.00 to MCCONICO 230.00
1 19022 19320 "2"   0   # LINE  from  DAVIS    230.00 to TOPOCK   230.00
0
#
#  Case Number 104
1 19072 19056 "1"   0   # LINE  from  HILLTOP  230.00 to MCCONICO 230.00
1 19320 19316 "1"   0   # LINE  from  TOPOCK   230.00 to SOPOINT  230.00
0
#
#  Case Number 105
1 19072 19056 "1"   0   # LINE  from  HILLTOP  230.00 to MCCONICO 230.00
1 19320 19316 "2"   0   # LINE  from  TOPOCK   230.00 to SOPOINT  230.00
0
#
#  Case Number 106
1 19072 19056 "1"   0   # LINE  from  HILLTOP  230.00 to MCCONICO 230.00
1 19320 19019 "1"   0   # LINE  from  TOPOCK   230.00 to BLK MESA 230.00
0
#
#  Case Number 107
1 19072 19056 "1"   0   # LINE  from  HILLTOP  230.00 to MCCONICO 230.00
1 19320 19074 "1"   0   # LINE  from  TOPOCK   230.00 to N.HAVASU 230.00
0
#
#  Case Number 108
1 19072 19056 "1"   0   # LINE  from  HILLTOP  230.00 to MCCONICO 230.00
1 19052 14231 "1"   0   # LINE  from  LIBERTY  230.00 to WESTWING 230.00
0
#
#  Case Number 109
1 19072 19056 "1"   0   # LINE  from  HILLTOP  230.00 to MCCONICO 230.00
1 19012 19011 "1"   0   # LINE  from  MEAD S   230.00 to MEAD N   230.00
0
#
#  Case Number 110
1 19072 19056 "1"   0   # LINE  from  HILLTOP  230.00 to MCCONICO 230.00
1 19012 19011 "2"   0   # LINE  from  MEAD S   230.00 to MEAD N   230.00
0
#
#  Case Number 111
1 19072 19056 "1"   0   # LINE  from  HILLTOP  230.00 to MCCONICO 230.00
2 19037 19011 "1"   0   # TRAN  from  MEAD     345.00 to MEAD N   230.00
0
#
```

```
#  Case Number 112
1  19056 19310 "1"   0   # LINE  from  MCCONICO 230.00 to GRIFFITH 230.00
1  19310 19314 "1"   0   # LINE  from  GRIFFITH 230.00 to PEACOCK  230.00
0
#
#  Case Number 113
1  19056 19310 "1"   0   # LINE  from  MCCONICO 230.00 to GRIFFITH 230.00
1  19314 19072 "1"   0   # LINE  from  PEACOCK  230.00 to HILLTOP  230.00
0
#
#  Case Number 114
1  19056 19310 "1"   0   # LINE  from  MCCONICO 230.00 to GRIFFITH 230.00
1  19022 19011 "1"   0   # LINE  from  DAVIS    230.00 to MEAD N   230.00
0
#
#  Case Number 115
1  19056 19310 "1"   0   # LINE  from  MCCONICO 230.00 to GRIFFITH 230.00
1  19022 26046 "1"   0   # LINE  from  DAVIS    230.00 to MCCULLGH 230.00
0
#
#  Case Number 116
1  19056 19310 "1"   0   # LINE  from  MCCONICO 230.00 to GRIFFITH 230.00
1  19022 19130 "1"   0   # LINE  from  DAVIS    230.00 to ZORB     230.00
0
#
#  Case Number 117
1  19056 19310 "1"   0   # LINE  from  MCCONICO 230.00 to GRIFFITH 230.00
1  19130 19320 "1"   0   # LINE  from  ZORB     230.00 to TOPOCK   230.00
0
#
#  Case Number 118
1  19056 19310 "1"   0   # LINE  from  MCCONICO 230.00 to GRIFFITH 230.00
1  19022 19320 "2"   0   # LINE  from  DAVIS    230.00 to TOPOCK   230.00
0
#
#  Case Number 119
1  19056 19310 "1"   0   # LINE  from  MCCONICO 230.00 to GRIFFITH 230.00
1  19320 19316 "1"   0   # LINE  from  TOPOCK   230.00 to SOPOINT  230.00
0
#
#  Case Number 120
1  19056 19310 "1"   0   # LINE  from  MCCONICO 230.00 to GRIFFITH 230.00
1  19320 19316 "2"   0   # LINE  from  TOPOCK   230.00 to SOPOINT  230.00
0
#
#  Case Number 121
1  19056 19310 "1"   0   # LINE  from  MCCONICO 230.00 to GRIFFITH 230.00
1  19320 19019 "1"   0   # LINE  from  TOPOCK   230.00 to BLK MESA 230.00
0
#
#  Case Number 122
1  19056 19310 "1"   0   # LINE  from  MCCONICO 230.00 to GRIFFITH 230.00
1  19320 19074 "1"   0   # LINE  from  TOPOCK   230.00 to N.HAVASU 230.00
0
#
#  Case Number 123
1  19056 19310 "1"   0   # LINE  from  MCCONICO 230.00 to GRIFFITH 230.00
1  19052 14231 "1"   0   # LINE  from  LIBERTY  230.00 to WESTWING 230.00
0
#
#  Case Number 124
1  19056 19310 "1"   0   # LINE  from  MCCONICO 230.00 to GRIFFITH 230.00
1  19012 19011 "1"   0   # LINE  from  MEAD S   230.00 to MEAD N   230.00
0
#
#  Case Number 125
1  19056 19310 "1"   0   # LINE  from  MCCONICO 230.00 to GRIFFITH 230.00
1  19012 19011 "2"   0   # LINE  from  MEAD S   230.00 to MEAD N   230.00
0
#
```

```
#  Case Number 126
1  19056 19310 "1"   0    # LINE  from  MCCONICO 230.00 to GRIFFITH 230.00
2  19037 19011 "1"   0    # TRAN  from  MEAD    345.00 to MEAD N  230.00
0
#
#  Case Number 127
1  19310 19314 "1"   0    # LINE  from  GRIFFITH 230.00 to PEACOCK  230.00
1  19314 19072 "1"   0    # LINE  from  PEACOCK  230.00 to HILLTOP  230.00
0
#
#  Case Number 128
1  19310 19314 "1"   0    # LINE  from  GRIFFITH 230.00 to PEACOCK  230.00
1  19022 19011 "1"   0    # LINE  from  DAVIS    230.00 to MEAD N   230.00
0
#
#  Case Number 129
1  19310 19314 "1"   0    # LINE  from  GRIFFITH 230.00 to PEACOCK  230.00
1  19022 26046 "1"   0    # LINE  from  DAVIS    230.00 to MCCULLGH 230.00
0
#
#  Case Number 130
1  19310 19314 "1"   0    # LINE  from  GRIFFITH 230.00 to PEACOCK  230.00
1  19022 19130 "1"   0    # LINE  from  DAVIS    230.00 to ZORB     230.00
0
#
#  Case Number 131
1  19310 19314 "1"   0    # LINE  from  GRIFFITH 230.00 to PEACOCK  230.00
1  19130 19320 "1"   0    # LINE  from  ZORB     230.00 to TOPOCK   230.00
0
#
#  Case Number 132
1  19310 19314 "1"   0    # LINE  from  GRIFFITH 230.00 to PEACOCK  230.00
1  19022 19320 "2"   0    # LINE  from  DAVIS    230.00 to TOPOCK   230.00
0
#
#  Case Number 133
1  19310 19314 "1"   0    # LINE  from  GRIFFITH 230.00 to PEACOCK  230.00
1  19320 19316 "1"   0    # LINE  from  TOPOCK   230.00 to SOPOINT  230.00
0
#
#  Case Number 134
1  19310 19314 "1"   0    # LINE  from  GRIFFITH 230.00 to PEACOCK  230.00
1  19320 19316 "2"   0    # LINE  from  TOPOCK   230.00 to SOPOINT  230.00
0
#
#  Case Number 135
1  19310 19314 "1"   0    # LINE  from  GRIFFITH 230.00 to PEACOCK  230.00
1  19320 19019 "1"   0    # LINE  from  TOPOCK   230.00 to BLK MESA 230.00
0
#
#  Case Number 136
1  19310 19314 "1"   0    # LINE  from  GRIFFITH 230.00 to PEACOCK  230.00
1  19320 19074 "1"   0    # LINE  from  TOPOCK   230.00 to N.HAVASU 230.00
0
#
#  Case Number 137
1  19310 19314 "1"   0    # LINE  from  GRIFFITH 230.00 to PEACOCK  230.00
1  19052 14231 "1"   0    # LINE  from  LIBERTY  230.00 to WESTWING 230.00
0
#
#  Case Number 138
1  19310 19314 "1"   0    # LINE  from  GRIFFITH 230.00 to PEACOCK  230.00
1  19012 19011 "1"   0    # LINE  from  MEAD S   230.00 to MEAD N   230.00
0
#
#  Case Number 139
1  19310 19314 "1"   0    # LINE  from  GRIFFITH 230.00 to PEACOCK  230.00
1  19012 19011 "2"   0    # LINE  from  MEAD S   230.00 to MEAD N   230.00
0
#
```

```
#  Case Number 140
1  19310 19314 "1"   0   # LINE  from  GRIFFITH 230.00 to PEACOCK  230.00
2  19037 19011 "1"   0   # TRAN  from  MEAD     345.00 to MEAD N   230.00
0
#
#  Case Number 141
1  19314 19072 "1"   0   # LINE  from  PEACOCK  230.00 to HILLTOP  230.00
1  19022 19011 "1"   0   # LINE  from  DAVIS    230.00 to MEAD N   230.00
0
#
#  Case Number 142
1  19314 19072 "1"   0   # LINE  from  PEACOCK  230.00 to HILLTOP  230.00
1  19022 26046 "1"   0   # LINE  from  DAVIS    230.00 to MCCULLGH 230.00
0
#
#  Case Number 143
1  19314 19072 "1"   0   # LINE  from  PEACOCK  230.00 to HILLTOP  230.00
1  19022 19130 "1"   0   # LINE  from  DAVIS    230.00 to ZORB     230.00
0
#
#  Case Number 144
1  19314 19072 "1"   0   # LINE  from  PEACOCK  230.00 to HILLTOP  230.00
1  19130 19320 "1"   0   # LINE  from  ZORB     230.00 to TOPOCK   230.00
0
#
#  Case Number 145
1  19314 19072 "1"   0   # LINE  from  PEACOCK  230.00 to HILLTOP  230.00
1  19022 19320 "2"   0   # LINE  from  DAVIS    230.00 to TOPOCK   230.00
0
#
#  Case Number 146
1  19314 19072 "1"   0   # LINE  from  PEACOCK  230.00 to HILLTOP  230.00
1  19320 19316 "1"   0   # LINE  from  TOPOCK   230.00 to SOPOINT  230.00
0
#
#  Case Number 147
1  19314 19072 "1"   0   # LINE  from  PEACOCK  230.00 to HILLTOP  230.00
1  19320 19316 "2"   0   # LINE  from  TOPOCK   230.00 to SOPOINT  230.00
0
#
#  Case Number 148
1  19314 19072 "1"   0   # LINE  from  PEACOCK  230.00 to HILLTOP  230.00
1  19320 19019 "1"   0   # LINE  from  TOPOCK   230.00 to BLK MESA 230.00
0
#
#  Case Number 149
1  19314 19072 "1"   0   # LINE  from  PEACOCK  230.00 to HILLTOP  230.00
1  19320 19074 "1"   0   # LINE  from  TOPOCK   230.00 to N.HAVASU 230.00
0
#
#  Case Number 150
1  19314 19072 "1"   0   # LINE  from  PEACOCK  230.00 to HILLTOP  230.00
1  19052 14231 "1"   0   # LINE  from  LIBERTY  230.00 to WESTWING 230.00
0
#
#  Case Number 151
1  19314 19072 "1"   0   # LINE  from  PEACOCK  230.00 to HILLTOP  230.00
1  19012 19011 "1"   0   # LINE  from  MEAD S   230.00 to MEAD N   230.00
0
#
#  Case Number 152
1  19314 19072 "1"   0   # LINE  from  PEACOCK  230.00 to HILLTOP  230.00
1  19012 19011 "2"   0   # LINE  from  MEAD S   230.00 to MEAD N   230.00
0
#
#  Case Number 153
1  19314 19072 "1"   0   # LINE  from  PEACOCK  230.00 to HILLTOP  230.00
2  19037 19011 "1"   0   # TRAN  from  MEAD     345.00 to MEAD N   230.00
0
#
```

```
#  Case Number 154
1  19022 19011 "1"   0   # LINE  from  DAVIS   230.00 to MEAD N   230.00
1  19022 26046 "1"   0   # LINE  from  DAVIS   230.00 to MCCULLGH 230.00
0
#
#  Case Number 155
1  19022 19011 "1"   0   # LINE  from  DAVIS   230.00 to MEAD N   230.00
1  19022 19130 "1"   0   # LINE  from  DAVIS   230.00 to ZORB     230.00
0
#
#  Case Number 156
1  19022 19011 "1"   0   # LINE  from  DAVIS   230.00 to MEAD N   230.00
1  19130 19320 "1"   0   # LINE  from  ZORB    230.00 to TOPOCK   230.00
0
#
#  Case Number 157
1  19022 19011 "1"   0   # LINE  from  DAVIS   230.00 to MEAD N   230.00
1  19022 19320 "2"   0   # LINE  from  DAVIS   230.00 to TOPOCK   230.00
0
#
#  Case Number 158
1  19022 19011 "1"   0   # LINE  from  DAVIS   230.00 to MEAD N   230.00
1  19320 19316 "1"   0   # LINE  from  TOPOCK  230.00 to SOPOINT  230.00
0
#
#  Case Number 159
1  19022 19011 "1"   0   # LINE  from  DAVIS   230.00 to MEAD N   230.00
1  19320 19316 "2"   0   # LINE  from  TOPOCK  230.00 to SOPOINT  230.00
0
#
#  Case Number 160
1  19022 19011 "1"   0   # LINE  from  DAVIS   230.00 to MEAD N   230.00
1  19320 19019 "1"   0   # LINE  from  TOPOCK  230.00 to BLK MESA 230.00
0
#
#  Case Number 161
1  19022 19011 "1"   0   # LINE  from  DAVIS   230.00 to MEAD N   230.00
1  19320 19074 "1"   0   # LINE  from  TOPOCK  230.00 to N.HAVASU 230.00
0
#
#  Case Number 162
1  19022 19011 "1"   0   # LINE  from  DAVIS   230.00 to MEAD N   230.00
1  19052 14231 "1"   0   # LINE  from  LIBERTY 230.00 to WESTWING 230.00
0
#
#  Case Number 163
1  19022 19011 "1"   0   # LINE  from  DAVIS   230.00 to MEAD N   230.00
1  19012 19011 "1"   0   # LINE  from  MEAD S  230.00 to MEAD N   230.00
0
#
#  Case Number 164
1  19022 19011 "1"   0   # LINE  from  DAVIS   230.00 to MEAD N   230.00
1  19012 19011 "2"   0   # LINE  from  MEAD S  230.00 to MEAD N   230.00
0
#
#  Case Number 165
1  19022 19011 "1"   0   # LINE  from  DAVIS   230.00 to MEAD N   230.00
2  19037 19011 "1"   0   # TRAN  from  MEAD    345.00 to MEAD N   230.00
0
#
#  Case Number 166
1  19022 26046 "1"   0   # LINE  from  DAVIS   230.00 to MCCULLGH 230.00
1  19022 19130 "1"   0   # LINE  from  DAVIS   230.00 to ZORB     230.00
0
#
#  Case Number 167
1  19022 26046 "1"   0   # LINE  from  DAVIS   230.00 to MCCULLGH 230.00
1  19130 19320 "1"   0   # LINE  from  ZORB    230.00 to TOPOCK   230.00
0
#
```

```
#  Case Number 168
1  19022 26046 "1"   0   # LINE  from  DAVIS    230.00 to MCCULLGH 230.00
1  19022 19320 "2"   0   # LINE  from  DAVIS    230.00 to TOPOCK   230.00
0
#
#  Case Number 169
1  19022 26046 "1"   0   # LINE  from  DAVIS    230.00 to MCCULLGH 230.00
1  19320 19316 "1"   0   # LINE  from  TOPOCK   230.00 to SOPOINT  230.00
0
#
#  Case Number 170
1  19022 26046 "1"   0   # LINE  from  DAVIS    230.00 to MCCULLGH 230.00
1  19320 19316 "2"   0   # LINE  from  TOPOCK   230.00 to SOPOINT  230.00
0
#
#  Case Number 171
1  19022 26046 "1"   0   # LINE  from  DAVIS    230.00 to MCCULLGH 230.00
1  19320 19019 "1"   0   # LINE  from  TOPOCK   230.00 to BLK MESA 230.00
0
#
#  Case Number 172
1  19022 26046 "1"   0   # LINE  from  DAVIS    230.00 to MCCULLGH 230.00
1  19320 19074 "1"   0   # LINE  from  TOPOCK   230.00 to N.HAVASU 230.00
0
#
#  Case Number 173
1  19022 26046 "1"   0   # LINE  from  DAVIS    230.00 to MCCULLGH 230.00
1  19052 14231 "1"   0   # LINE  from  LIBERTY  230.00 to WESTWING 230.00
0
#
#  Case Number 174
1  19022 26046 "1"   0   # LINE  from  DAVIS    230.00 to MCCULLGH 230.00
1  19012 19011 "1"   0   # LINE  from  MEAD S   230.00 to MEAD N   230.00
0
#
#  Case Number 175
1  19022 26046 "1"   0   # LINE  from  DAVIS    230.00 to MCCULLGH 230.00
1  19012 19011 "2"   0   # LINE  from  MEAD S   230.00 to MEAD N   230.00
0
#
#  Case Number 176
1  19022 26046 "1"   0   # LINE  from  DAVIS    230.00 to MCCULLGH 230.00
2  19037 19011 "1"   0   # TRAN  from  MEAD     345.00 to MEAD N   230.00
0
#
#  Case Number 177
1  19022 19130 "1"   0   # LINE  from  DAVIS    230.00 to ZORB     230.00
1  19130 19320 "1"   0   # LINE  from  ZORB     230.00 to TOPOCK   230.00
0
#
#  Case Number 178
1  19022 19130 "1"   0   # LINE  from  DAVIS    230.00 to ZORB     230.00
1  19022 19320 "2"   0   # LINE  from  DAVIS    230.00 to TOPOCK   230.00
0
#
#  Case Number 179
1  19022 19130 "1"   0   # LINE  from  DAVIS    230.00 to ZORB     230.00
1  19320 19316 "1"   0   # LINE  from  TOPOCK   230.00 to SOPOINT  230.00
0
#
#  Case Number 180
1  19022 19130 "1"   0   # LINE  from  DAVIS    230.00 to ZORB     230.00
1  19320 19316 "2"   0   # LINE  from  TOPOCK   230.00 to SOPOINT  230.00
0
#
#  Case Number 181
1  19022 19130 "1"   0   # LINE  from  DAVIS    230.00 to ZORB     230.00
1  19320 19019 "1"   0   # LINE  from  TOPOCK   230.00 to BLK MESA 230.00
0
#
```

```
#  Case Number 182
1  19022 19130 "1"   0   # LINE  from  DAVIS   230.00 to ZORB    230.00
1  19320 19074 "1"   0   # LINE  from  TOPOCK  230.00 to N.HAVASU 230.00
0
#
#  Case Number 183
1  19022 19130 "1"   0   # LINE  from  DAVIS   230.00 to ZORB    230.00
1  19052 14231 "1"   0   # LINE  from  LIBERTY 230.00 to WESTWING 230.00
0
#
#  Case Number 184
1  19022 19130 "1"   0   # LINE  from  DAVIS   230.00 to ZORB    230.00
1  19012 19011 "1"   0   # LINE  from  MEAD S  230.00 to MEAD N   230.00
0
#
#  Case Number 185
1  19022 19130 "1"   0   # LINE  from  DAVIS   230.00 to ZORB    230.00
1  19012 19011 "2"   0   # LINE  from  MEAD S  230.00 to MEAD N   230.00
0
#
#  Case Number 186
1  19022 19130 "1"   0   # LINE  from  DAVIS   230.00 to ZORB    230.00
2  19037 19011 "1"   0   # TRAN  from  MEAD    345.00 to MEAD N   230.00
0
#
#  Case Number 187
1  19130 19320 "1"   0   # LINE  from  ZORB    230.00 to TOPOCK   230.00
1  19022 19320 "2"   0   # LINE  from  DAVIS   230.00 to TOPOCK   230.00
0
#
#  Case Number 188
1  19130 19320 "1"   0   # LINE  from  ZORB    230.00 to TOPOCK   230.00
1  19320 19316 "1"   0   # LINE  from  TOPOCK  230.00 to SOPOINT  230.00
0
#
#  Case Number 189
1  19130 19320 "1"   0   # LINE  from  ZORB    230.00 to TOPOCK   230.00
1  19320 19316 "2"   0   # LINE  from  TOPOCK  230.00 to SOPOINT  230.00
0
#
#  Case Number 190
1  19130 19320 "1"   0   # LINE  from  ZORB    230.00 to TOPOCK   230.00
1  19320 19019 "1"   0   # LINE  from  TOPOCK  230.00 to BLK MESA 230.00
0
#
#  Case Number 191
1  19130 19320 "1"   0   # LINE  from  ZORB    230.00 to TOPOCK   230.00
1  19320 19074 "1"   0   # LINE  from  TOPOCK  230.00 to N.HAVASU 230.00
0
#
#  Case Number 192
1  19130 19320 "1"   0   # LINE  from  ZORB    230.00 to TOPOCK   230.00
1  19052 14231 "1"   0   # LINE  from  LIBERTY 230.00 to WESTWING 230.00
0
#
#  Case Number 193
1  19130 19320 "1"   0   # LINE  from  ZORB    230.00 to TOPOCK   230.00
1  19012 19011 "1"   0   # LINE  from  MEAD S  230.00 to MEAD N   230.00
0
#
#  Case Number 194
1  19130 19320 "1"   0   # LINE  from  ZORB    230.00 to TOPOCK   230.00
1  19012 19011 "2"   0   # LINE  from  MEAD S  230.00 to MEAD N   230.00
0
#
#  Case Number 195
1  19130 19320 "1"   0   # LINE  from  ZORB    230.00 to TOPOCK   230.00
2  19037 19011 "1"   0   # TRAN  from  MEAD    345.00 to MEAD N   230.00
0
#
```

```
#  Case Number 196
1  19022 19320 "2"   0   # LINE  from  DAVIS   230.00 to TOPOCK  230.00
1  19320 19316 "1"   0   # LINE  from  TOPOCK  230.00 to SOPOINT 230.00
0
#
#  Case Number 197
1  19022 19320 "2"   0   # LINE  from  DAVIS   230.00 to TOPOCK  230.00
1  19320 19316 "2"   0   # LINE  from  TOPOCK  230.00 to SOPOINT 230.00
0
#
#  Case Number 198
1  19022 19320 "2"   0   # LINE  from  DAVIS   230.00 to TOPOCK  230.00
1  19320 19019 "1"   0   # LINE  from  TOPOCK  230.00 to BLK MESA 230.00
0
#
#  Case Number 199
1  19022 19320 "2"   0   # LINE  from  DAVIS   230.00 to TOPOCK  230.00
1  19320 19074 "1"   0   # LINE  from  TOPOCK  230.00 to N.HAVASU 230.00
0
#
#  Case Number 200
1  19022 19320 "2"   0   # LINE  from  DAVIS   230.00 to TOPOCK  230.00
1  19052 14231 "1"   0   # LINE  from  LIBERTY 230.00 to WESTWING 230.00
0
#
#  Case Number 201
1  19022 19320 "2"   0   # LINE  from  DAVIS   230.00 to TOPOCK  230.00
1  19012 19011 "1"   0   # LINE  from  MEAD S  230.00 to MEAD N   230.00
0
#
#  Case Number 202
1  19022 19320 "2"   0   # LINE  from  DAVIS   230.00 to TOPOCK  230.00
1  19012 19011 "1"   0   # LINE  from  MEAD S  230.00 to MEAD N   230.00
0
#
#  Case Number 203
1  19022 19320 "2"   0   # LINE  from  DAVIS   230.00 to TOPOCK  230.00
2  19037 19011 "1"   0   # TRAN  from  MEAD    345.00 to MEAD N   230.00
0
#
#  Case Number 204
1  19320 19316 "1"   0   # LINE  from  TOPOCK  230.00 to SOPOINT 230.00
1  19320 19316 "2"   0   # LINE  from  TOPOCK  230.00 to SOPOINT 230.00
0
#
#  Case Number 205
1  19320 19316 "1"   0   # LINE  from  TOPOCK  230.00 to SOPOINT 230.00
1  19320 19019 "1"   0   # LINE  from  TOPOCK  230.00 to BLK MESA 230.00
0
#
#  Case Number 206
1  19320 19316 "1"   0   # LINE  from  TOPOCK  230.00 to SOPOINT 230.00
1  19320 19074 "1"   0   # LINE  from  TOPOCK  230.00 to N.HAVASU 230.00
0
#
#  Case Number 207
1  19320 19316 "1"   0   # LINE  from  TOPOCK  230.00 to SOPOINT 230.00
1  19052 14231 "1"   0   # LINE  from  LIBERTY 230.00 to WESTWING 230.00
0
#
#  Case Number 208
1  19320 19316 "1"   0   # LINE  from  TOPOCK  230.00 to SOPOINT 230.00
1  19012 19011 "1"   0   # LINE  from  MEAD S  230.00 to MEAD N   230.00
0
#
#  Case Number 209
1  19320 19316 "1"   0   # LINE  from  TOPOCK  230.00 to SOPOINT 230.00
1  19012 19011 "2"   0   # LINE  from  MEAD S  230.00 to MEAD N   230.00
0
#
```

```
#  Case Number 210
1  19320 19316 "1"   0   # LINE  from  TOPOCK   230.00 to SOPOINT  230.00
2  19037 19011 "1"   0   # TRAN  from  MEAD     345.00 to MEAD N   230.00
0
#
#  Case Number 211
1  19320 19316 "2"   0   # LINE  from  TOPOCK   230.00 to SOPOINT  230.00
1  19320 19019 "1"   0   # LINE  from  TOPOCK   230.00 to BLK MESA 230.00
0
#
#  Case Number 212
1  19320 19316 "2"   0   # LINE  from  TOPOCK   230.00 to SOPOINT  230.00
1  19320 19074 "1"   0   # LINE  from  TOPOCK   230.00 to N.HAVASU 230.00
0
#
#  Case Number 213
1  19320 19316 "2"   0   # LINE  from  TOPOCK   230.00 to SOPOINT  230.00
1  19052 14231 "1"   0   # LINE  from  LIBERTY  230.00 to WESTWING 230.00
0
#
#  Case Number 214
1  19320 19316 "2"   0   # LINE  from  TOPOCK   230.00 to SOPOINT  230.00
1  19012 19011 "1"   0   # LINE  from  MEAD S   230.00 to MEAD N   230.00
0
#
#  Case Number 215
1  19320 19316 "2"   0   # LINE  from  TOPOCK   230.00 to SOPOINT  230.00
1  19012 19011 "1"   0   # LINE  from  MEAD S   230.00 to MEAD N   230.00
0
#
#  Case Number 216
1  19320 19316 "2"   0   # LINE  from  TOPOCK   230.00 to SOPOINT  230.00
2  19037 19011 "1"   0   # TRAN  from  MEAD     345.00 to MEAD N   230.00
0
#
#  Case Number 217
1  19320 19019 "1"   0   # LINE  from  TOPOCK   230.00 to BLK MESA 230.00
1  19320 19074 "1"   0   # LINE  from  TOPOCK   230.00 to N.HAVASU 230.00
0
#
#  Case Number 218
1  19320 19019 "1"   0   # LINE  from  TOPOCK   230.00 to BLK MESA 230.00
1  19052 14231 "1"   0   # LINE  from  LIBERTY  230.00 to WESTWING 230.00
0
#
#  Case Number 219
1  19320 19019 "1"   0   # LINE  from  TOPOCK   230.00 to BLK MESA 230.00
1  19012 19011 "1"   0   # LINE  from  MEAD S   230.00 to MEAD N   230.00
0
#
#  Case Number 220
1  19320 19019 "1"   0   # LINE  from  TOPOCK   230.00 to BLK MESA 230.00
1  19012 19011 "2"   0   # LINE  from  MEAD S   230.00 to MEAD N   230.00
0
#
#  Case Number 221
1  19320 19019 "1"   0   # LINE  from  TOPOCK   230.00 to BLK MESA 230.00
2  19037 19011 "1"   0   # TRAN  from  MEAD     345.00 to MEAD N   230.00
0
#
#  Case Number 222
1  19320 19074 "1"   0   # LINE  from  TOPOCK   230.00 to N.HAVASU 230.00
1  19052 14231 "1"   0   # LINE  from  LIBERTY  230.00 to WESTWING 230.00
0
#
#  Case Number 223
1  19320 19074 "1"   0   # LINE  from  TOPOCK   230.00 to N.HAVASU 230.00
1  19012 19011 "1"   0   # LINE  from  MEAD S   230.00 to MEAD N   230.00
0
#
```

```
#  Case Number 224
1  19320 19074 "1"   0    # LINE  from  TOPOCK   230.00 to N.HAVASU 230.00
1  19012 19011 "2"   0    # LINE  from  MEAD S   230.00 to MEAD N   230.00
0
#
#  Case Number 225
1  19320 19074 "1"   0    # LINE  from  TOPOCK   230.00 to N.HAVASU 230.00
2  19037 19011 "1"   0    # TRAN  from  MEAD     345.00 to MEAD N   230.00
0
#
#  Case Number 226
1  19052 14231 "1"   0    # LINE  from  LIBERTY  230.00 to WESTWING 230.00
1  19012 19011 "1"   0    # LINE  from  MEAD S   230.00 to MEAD N   230.00
0
#
#  Case Number 227
1  19052 14231 "1"   0    # LINE  from  LIBERTY  230.00 to WESTWING 230.00
1  19012 19011 "2"   0    # LINE  from  MEAD S   230.00 to MEAD N   230.00
0
#
#  Case Number 228
1  19052 14231 "1"   0    # LINE  from  LIBERTY  230.00 to WESTWING 230.00
2  19037 19011 "1"   0    # TRAN  from  MEAD     345.00 to MEAD N   230.00
0
#
#  Case Number 229
1  19012 19011 "1"   0    # LINE  from  MEAD S   230.00 to MEAD N   230.00
1  19012 19011 "2"   0    # LINE  from  MEAD S   230.00 to MEAD N   230.00
0
#
#  Case Number 230
1  19012 19011 "1"   0    # LINE  from  MEAD S   230.00 to MEAD N   230.00
2  19037 19011 "1"   0    # TRAN  from  MEAD     345.00 to MEAD N   230.00
0
#
#  Case Number 231
1  19012 19011 "2"   0    # LINE  from  MEAD S   230.00 to MEAD N   230.00
2  19037 19011 "1"   0    # TRAN  from  MEAD     345.00 to MEAD N   230.00
0
-1
# EOF
```

Appendix D

Transient Stability Modeling

Northern Arizona Energy Project Dynamic Data

Model Name: genrou

Description Solid rotor generator represented by equal mutual inductance rotor modeling

Prerequisites: Generator present in load flow working case

Inputs: Network boundary variables, Field Voltage, Turbine Power

Invocation: `genrou [<n>] {<name> <kv>} <id> :`

Parameters:

EPCL Variable	*Default Data*	*Description*
Tpdo	7.0	D-axis transient rotor time constant
Tppdo	0.030	D-axis sub-transient rotor time constant
Tpqo	0.75	Q-axis transient rotor time constant
Tppqo	0.05	Q-axis sub-transient rotor time constant
H	3.0	Inertia constant, sec
D	0.0	Damping factor, pu
Ld	2.1	D-axis synchronous reactance
Lq	2.0	Q-axis synchronous reactance
Lpd	0.2	D-axis transient reactance
Lpq	0.5	Q-axis transient reactance
Lppd	0.18	D-axis transient reactance
Ll	0.15	Stator leakage reactance, pu
S1	0.05	Saturation factor at 1 pu flux
S12	0.3	Saturation factor at 1.2 pu flux
Ra	0.0	Stator resistance, pu
Rcomp	0.0	Compounding resistance for voltage control, pu
Xcomp	0.0	Compounding reactance for voltage control, pu

Notes:

a) All rotor time constants must be non-zero.

b) All reactances must be specified. **Lppq** is taken to be equal to **Lppd**.

c) **D** has the dimensions ΔP(p.u.) / Δspeed (p.u.).

d) **S1** and **S12** are defined in Figure 3.10.2, and must be non- zero.

e) (**Ra**+j**Lppd**) overwrites the load flow machine subtransient impedance when the INIT, RDYD, or RDWS command is executed.

f) If **Rcomp** and **Xcomp** are absent from the data record read by RDYD, they are set to zero. If **Ra** is also absent, it is set to the resistance part of the machine subtransient impedance from the load flow data table.

Output Channels:

Record Level	*Name*	*Description*
1	spd	Shaft speed, p.u.
1	ang	Rotor angle, degrees
1	vt	Terminal voltage, p.u.
1	pg	Electrical power, MW
1	qg	Reactive power, MVAR
1	efd	Field voltage, p.u.

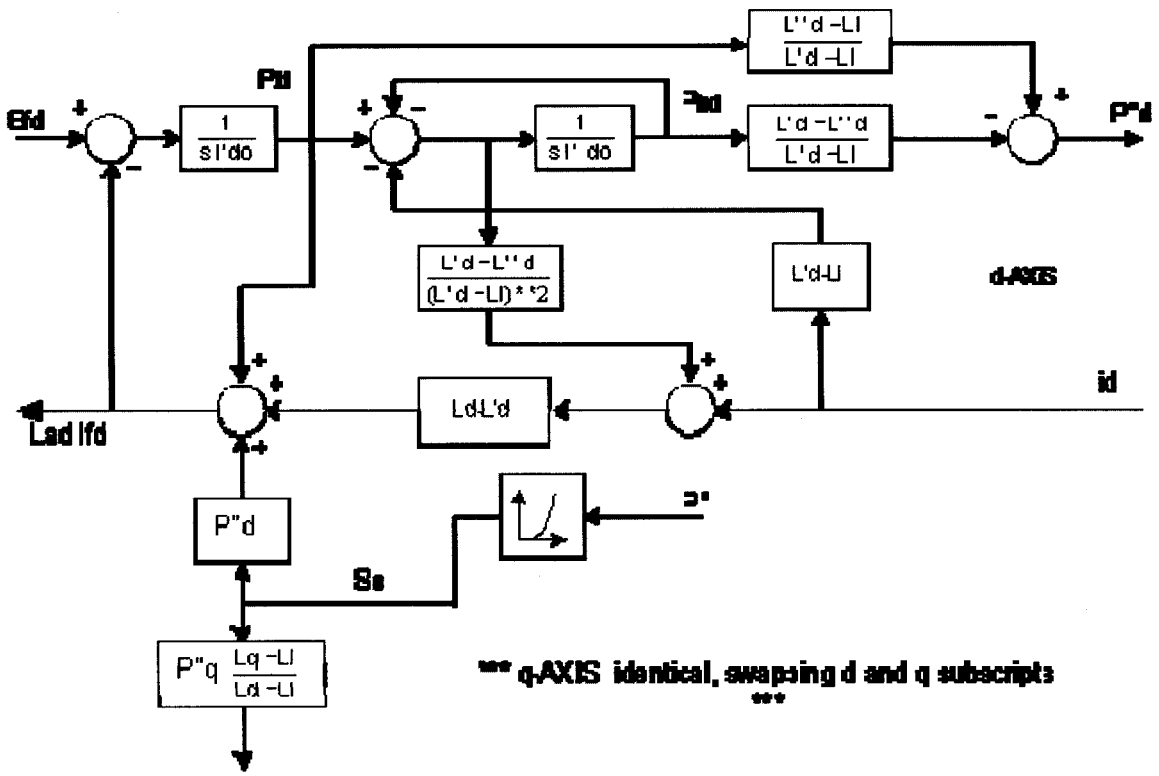

Model Name: exac8b

Description Brushless exciter with PID voltage regulator

Prerequisites: Generator model ahead of this model in dynamic models table

Inputs: Compounded generator terminal voltage, generator field current, generator speed

Invocation: `exac8b [<n>] {<name> <kv>} <id>:`

Parameters:

EPCL Variable	*Default Data*	*Description*
Tr	0.02	Voltage transducer time constant, sec.
Kvp	4.0	Voltage Regulator Proportional Gain
Kvi	4.0	Voltage Regulator Integral Gain
Kvd	20.0	Voltage Regulator Derivative Gain
Tvd	0.05	Voltage Regulator Derivative Time Constant, sec.
Vimax	0.1	Voltage Regulator Input Limit, p.u.
Ta	0.02	Voltage Regulator time constant, sec.
Vrmax	10.0	Maximum controller output, p.u.
Vrmin	-10.0	Minimum controller output, p.u.
Ke	1.0	Exciter field proportional constant
Te	0.2	Exciter field time constant, sec.
Kc	0.1	Rectifier regulation factor, p.u.
Kd	1.0	Exciter regulation factor, p.u.
E1	5.0	Exciter flux at knee of curve, p.u.
S(E1)	0.001	Saturation factor at knee
E2	7.0	Maximum exciter, p.u.
S(E2)	0.01	Saturation factor at max flux
Rcomp	0.0	Regulator compensating resistance, p.u.
Xcomp	0,0	Regulator compensating reactance, p.u.

Notes:

a) This model represents a brushless exciter with its excitation provided by a self contained voltage regulator. This model includes all features of the IEEE type AC8B excitation system model, plus augmentations to improve its accuracy and generality.

b) This model can be used to represent the model "SEL" digital excitation system of Basler Electric.

c) The exciter model includes representation of magnetic saturation, rectifier regulation, and armature reaction in the alternator exciter. Saturation is normally a very small effect in such machines and correspondingly, Se1, Se2 can normally be given small values. The rectifier regulation and armature reaction parameters, Kc, Kd, may be set to zero to ignore these effects.

d) Note that some manufacturers specify "loaded" magnetization curves for brushless exciters. In this case, their data may have Kc and Kd equal to zero and Se1, Se2 with quite large values. The use of a loaded magnetization curve is less accurate than full modeling by specifying Kc, Kd, but is widespread, nevertheless.

Output Channels:

Record Level	*Name*	*Description*
1	ifd	Generator field current, p.u.
1	vr	Voltage regulator output p.u.
1	vfe	Exciter field voltage p.u.
1	ife	Exciter field current p.u.

Block Diagram:

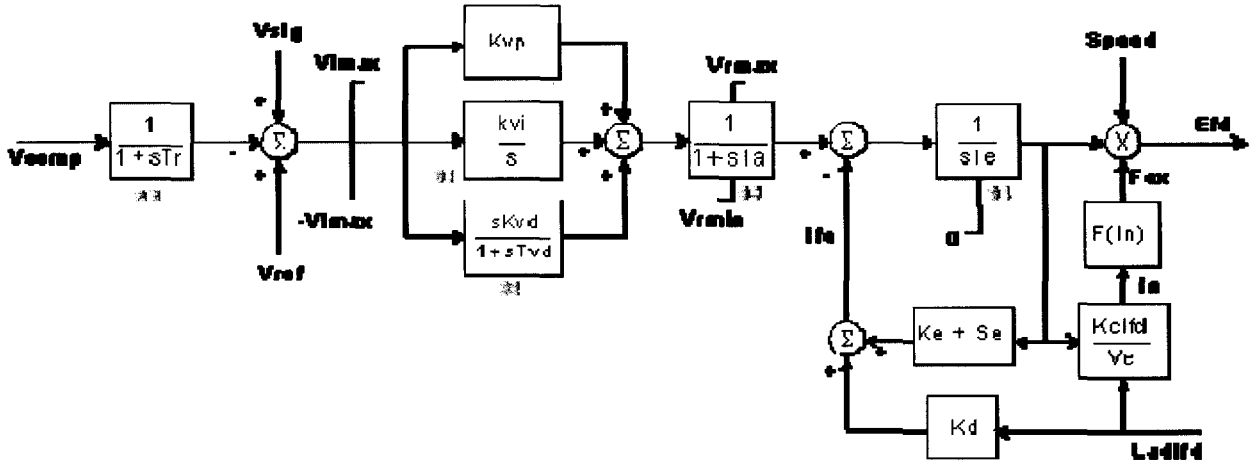

Model Name: ggov1

Description General governor model

Prerequisites: Generator model ahead of this model in the dynamic models table

Inputs: Shaft speed

Invocation: `ggov1 [<n>] {<name> <kv>} <id> : [mwcap=<value>]`

Parameters:

EPCL Variable	*Default Data*	*Description*
r	0.04	Permanent droop, p.u.
rselect	1.0	Feedback signal for droop = 1 selected electrical power = 0 none (isochronous governor) = -1 fuel valve stroke (true stroke) = -2 governor output (requested stroke)
Tpelec	1.0	Electrical power transducer time constant, sec.
maxerr	0.05	Maximum value for speed error signal
minerr	-0.05	Minimum value for speed error signal
Kpgov	10.0	Governor proportional gain
Kigov	2.0	Governor integral gain
Kdgov	0.0	Governor derivative gain
Tdgov	1.0	Governor derivative controller time constant
vmax	1.0	Maximum valve position limit
vmin	0.15	Minimum valve position limit
Tact	0.5	Actuator time constant
Kturb	1.5	Turbine gain
wfnl	0.2	No load fuel flow, p.u
Tb	0.5	Turbine lag time constant
Tc	0.0	Turbine lead time constant
Flag	1.0	Switch for fuel source characteristic = 0 for fuel flow independent of speed = 1 fuel flow proportional to speed
Teng	0.0	Transport lag time constant for diesel engine
Tfload	3.0	Load Limiter time constant
Kpload	2.0	Load limiter proportional gain for PI controller
Kiload	0.67	Load limiter integral gain for PI controller

Ldref	1.0	Load limiter reference value p.u.
Dm	0.0	Speed sensitivity coefficient, p.u.
ropen	.10	Maximum valve opening rate, p.u./sec.
rclose	-0.1	Minimum valve closing rate, p.u./sec.
Kimw	0.002	Power controller (reset) gain
Pmwset	80.0	Power controller setpoint, MW
aset	0.01	Acceleration limiter setpoint, p.u./sec.
Ka	10.0	Acceleration limiter Gain
Ta	0.1	Acceleration limiter time constant, sec.
db	0.0	Speed governor dead band
Tsa	4.0	Temperature detection lead time constant, sec.
Tsb	5.0	Temperature detection lag time constant, sec.
rup	99.0	Maximum rate of load limit increase
rdown	-99.0	Maximum rate of load limit decrease

Notes:

a) This model can be used to represent a variety of prime movers controlled by PID governors. It is suitable, for example, for representation of
- gas turbine and single shaft combined cycle turbines
- diesel engines with modern electronic or digital governors
- steam turbines where steam is supplied from a large boiler drum or a large header whose pressure is substantially constant over the period under study
- simple hydro turbines in dam configurations where the water column length is short and water inertia effects are minimal

b) Per unit parameters are on base of turbine MW capability. If no value is entered for "**mwcap**", the generator MVA base is used.

c) The range of fuel valve travel and of fuel flow is unity. Thus the largest possible value of **vmax** is 1.0 and the smallest possible value of **vmin** is zero. **Vmax** may, however, be reduced below unity to represent a loading limit that may be imposed by the operator or a supervisory control system. For gas turbines **vmin** should normally be greater than zero and less than **wfnl** to represent a minimum firing limit.

The value of the fuel flow at maximum output must be less than, or equal to unity, depending on the value of **Kturb**. If the initial power requires a fuel flow greater than 1.0, a warning message is written and **Kturb** is increased to permit initialization with valve position = 1.0.

d) The parameter **Teng** is provided for use in representing diesel engines where there is a small but measurable transport delay between a change in fuel flow setting and the development of torque. **Teng** should be zero in all but special cases where this transport delay is of particular concern.

e) The parameter **Flag** is provided to recognize that fuel flow, for a given fuel valve stroke, can be proportional to engine speed. This is the case for GE gas turbines and for diesel engines with positive displacement fuel injectors. **Flag** should be set to unity for all GE gas turbines and most diesel engines. **Flag** should be set to zero where it is known that the fuel control system keeps fuel flow independent of the engine speed.

f) The load limiter module may be used to impose a maximum output limit such as an exhaust temperature limit. To do this the time constant **Tfload** should be set to represent the time constant in the measurement of temperature (or other signal), and the gains of the limiter, **Kpload, Kiload**, should be set to give prompt stable control when on limit. The load limit can be deactivated by setting the parameter **Ldref** to a high value.

g) The parameter **Dm** can represent either the variation of the engine power with the shaft speed or the variation of maximum power capability with shaft speed.

If **Dm** is positive it describes the falling slope of the engine speed verses power characteristic as speed increases. A slightly falling characteristic is typical for reciprocating engines and some aero-derivative turbines.

If **Dm** is negative the engine power is assumed to be unaffected by the shaft speed, but the maximum permissible fuel flow is taken to fall with falling shaft speed. This is characteristic of single-shaft industrial turbines due to exhaust temperature limits.

h) This model includes a simple representation of a supervisory load controller. This controller is active if the parameter **Kimw** is non-zero. The load controller is a slow acting reset loop that adjusts the speed/load reference of the turbine governor to hold the electrical power output of the unit at its initial condition value. This value is stored in the parameter **Pmwset** when the model is initialized, and can be changed thereafter. The load controller must be adjusted to respond gently relative to the speed governor. A typical value for **Kimw** is 0.01, corresponding to a reset time of 100 seconds.

i) The load reference of the supervisory load control loop is accessible as the parameter, **Pmwset**. **Pmwset** is given a value automatically when the model is initialized. This value overwrites any value entered prior to initialization. This parameter should not be manipulated by the manual operation or an EPCL program prior to the execution of the "INIT' command.

j) The parameters **aset, Ka**, and **Ta** describe an acceleration limiter. Ta must be non-zero, but the acceleration limiter can be disabled by setting **aset** to a large value, such as 1.

l) The parameter, **db**, is the speed governor dead band. This parameter is stated in terms of per unit speed. In the majority of applications of **ggov1** it is recommended that this value be set to zero.

m) The parameters, **Tsa, Tsb**, are provided to augment the exhaust gas temperature measurement subsystem in gas turbines. For example, they may be set to values such as 4.,

5., to represent the 'radiation shield' element of large gas turbines. If both parameters are left off the end of the parameter list, they default to 1.0.

n) The parameters, **rup, rdown,** specify the maximum rate of increase and decrease of the output of the load limit controller **(Kpload/Kiload)**. These parameters should normally be set, or defaulted to 99/-99, but may be given particular values to represent the temperature limit controls of some GE heavy-duty engine controls. If both parameters are left off the end of the parameter list, they default to 99 and –99.

o) The fuel flow command (**fsr**) is determined by whichever is lowest of **fsrt**, **fsra**, and **fsrn**. Although not explicitly shown in the block diagram, the signals that are not in control track **fsr** so that they do not "windup" beyond that value. This represents GE gas turbine control practice but may not be true for other controller designs.

Output Channels:

Record Level	*Name*	*Description*
1	pm	Turbine power, MW
1	fsr	Fuel valve command, p.u.
1	fsrt	Temperature limit fuel valve command, p.u.

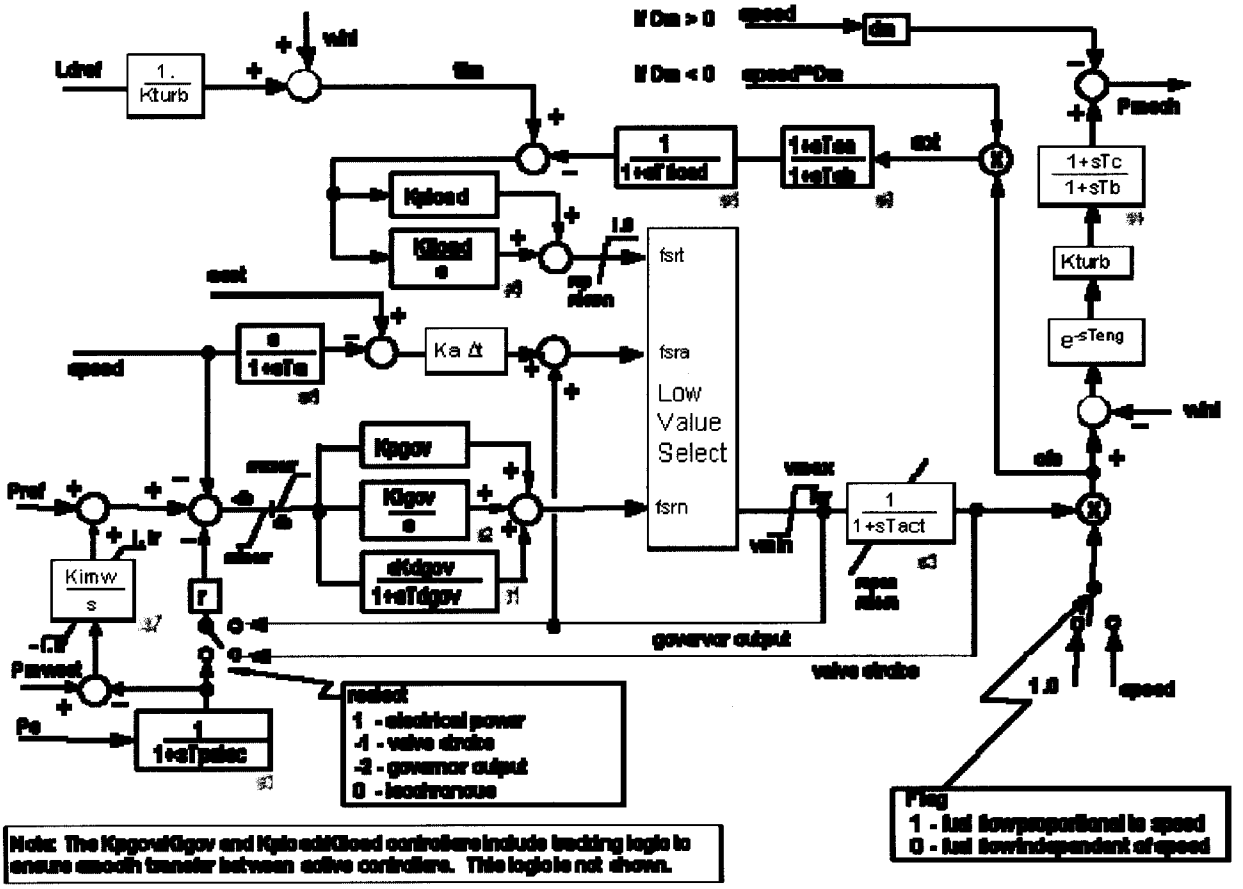
Ldref
1./Kturb
vlhl
flm
If Dw > 0
If Dw < 0
speed
dw
Pmech
1+sTc / 1+sTb
Kturb
e^-sTeng
vlhl
1/(1+sTfload)
1+sTas / 1+sTab
ext
Kpload
Kiload / s
1.0
fsrt
fsra
Low Value Select
fsrn
speed
1/(1+sTe)
Ka Δt
Kpgov
Kigov / s
dKdgov / 1+sTdgov
Pref
Kimw / s
1/(1+sTact)
vmax
vmin
pmax
pmin
governor output
valve stroke
Pelec
1/(1+sTpelec)
Pe
rselect
1 - electrical power
-1 - valve stroke
-2 - governor output
0 - isochronous
Flag
1 - fsri fsrp proportional to speed
0 - fsri fsrp independent of speed
Note: The Kpgov/Kigov and Kpload/Kiload controllers include tracking logic to ensure smooth transfer between active controllers. This logic is not shown.

Model Name: ieeest

Description Power system stabilizer

Prerequisites: Generator model ahead of this model in dynamic models table

Inputs:

Generator shaft speed

Frequency of generator terminal or system bus voltage

Generator electric power or accelerating power

Voltage amplitude of generator terminal bus or system bus

Current amplitude in generator step-up transformer branch

Invocation:

```
ieeest [<n>] {<name> <kv>} <id> :
```

Parameters:

EPCL Variable	*Default Data*	*Description*
j	0.0	Input signal code
k	0.0	Remote signal bus number
A1	0.0	Notch filter parameters
A2	0.0	Notch filter parameters
A3	0.0	Notch filter parameters
A4	0.0	Notch filter parameters
A5	0.0	Notch filter parameters
A6	0.0	Notch filter parameters
T1	0.0	Lead/lag time constant, sec.
T2	0.0	Lead/lag time constant, sec.
T3	0.0	Lead/lag time constant, sec.
T4	0.0	Lead/lag time constant, sec.
T5	0.0	Washout numerator time constant, sec.
T6	0.0	Washout denominator time constant, sec.
Ks	0.0	Stabilizer gain
Lsmax	0.0	Maximum stabilizer output, p.u.
Lsmin	0.0	Minimum stabilizer output, p.u.
Vcu	0.0	Stabilizer input cutoff threshold, p.u.
Vcl	0.0	Stabilizer input cutoff threshold, p.u.
Tdelay	0.0	Time delay, sec.

Notes:

a) T2, T4, T5, T6 must be greater than zero.

b) T1, T3 and Tdelay may be zero.

c) Set T1 = T2 and/or T3 = T4 to obtain null effect from a lead/lag block.

d) Ks may be positive or negative depending on the input signal that is active. Ks should normally be:

positive	for shaft speed or frequency input
negative	for electrical power input

e) The input signal code, j, and the remote bus number, k, specify the input signal used by the stabilizer. If k is zero the signal is taken from the shaft or terminals of the generator on which the stabilizer is located. If k is non-zero the signal is taken from bus number k (for j = 1, 2, 3, 4, or 5). The input signal code, j, is:

1	for shaft speed deviation
2	for frequency deviation of bus voltage
3	for generator electrical power
4	for generator accelerating power
5	for amplitude of bus voltage
6	not used
7	for amplitude of branch current

f) A1 through A6 may be zero. Set all A values to zero to ignore filter.

g) Tdelay should not exceed ten time steps.

Output Channels:

Record Level	*Name*	*Description*
1	vs	Stabilizer output signal, p.u.

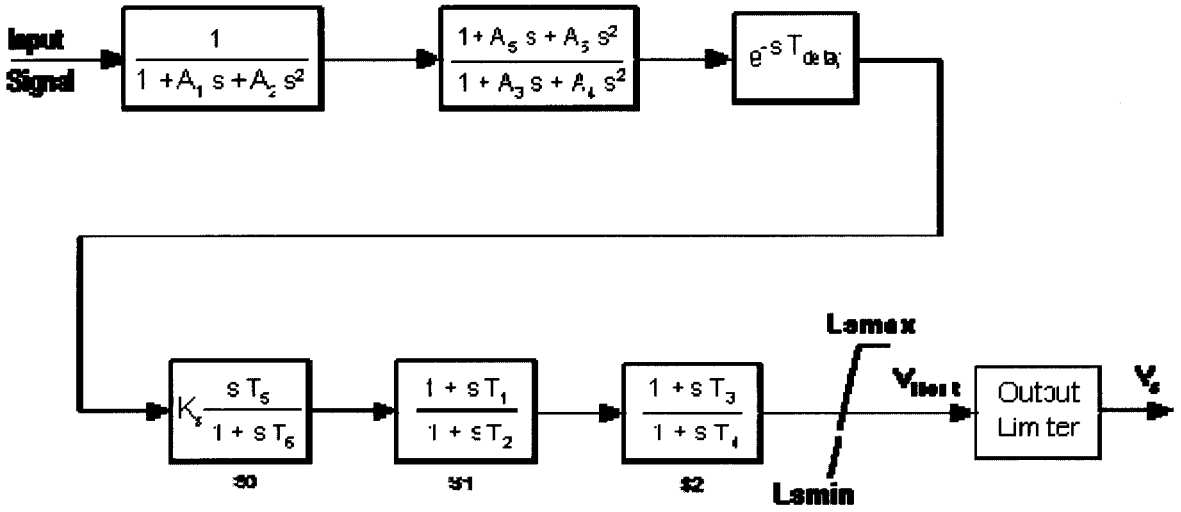


```
Output    Limiter

if ( Vcu && ( Vct > Vcu ) )
      Vs = 0.0
if ( Vcl && ( Vct < Vcl ) )
      Vs = 0.0
else
      Vs = Vllout


Vct = Compensating
      voltage
      ( genbc[k].vcomp )
```

Northern Arizona Energy Project data with machine parameters in GE format are identified below.

```
# Northern Arizona Energy Project, LM6000 Units, JLE, 3-20-2007
genrou  19610 "ARROYEP1"  13.80 "1 " : #9 mva=71.1760  9.6700 0.0500 2.9500 0.0500 1.1700 0.0000 2.3500 2.1500 0.2450 0.3500 0.1810  0.1300 0.1120 0.4610 0.0017
0.0000 0.0000 0.0000
exac8b  19610 "ARROYEP1"  13.80 "1 " : #9 0.010000  58.0000  7.0000  28.0000 0.070000 0.100000 0.016666  47.0000 0.0 1.000000  1.8000 0.060000  1.7800  7.1000
0.410000  9.4000  4.0100 0.0 0.050000
ggov1  19610 "ARROYEP1"  13.80 "1 " : #9 mwcap=60.5000 0.050000 1.000000 0.400000  10.0000 -10.0000  2.5000  1.2000 0.0 0.016666 1.000000  0.0 0.200000  2.4000
0.270000  2.0000 1.000000 1.000000 0.0 0.500000  4.0000  2.0000 1.000000 0.0 1.000000 -1.000000 0.010000  50.0000 0.010000  10.0000 1.000000  0.0 1.000000 1.000000
99.0000 -99.0000
ieeest  19610 "ARROYEP1"  13.80 "1 " : #9  3.0000 0.0 0.0 0.0 0.0 0.0 0.0 0.0 0.263000 0.016666  0.263000 0.196000  5.0000  5.0000 -0.250000 0.025000 -0.025000  2.0000
0.0 0.0

genrou  19612 "ARROYEP2"  13.80 "1 " : #9 mva=71.1760  9.6700 0.0500 2.9500 0.0500 1.1700 0.0000 2.3500 2.1500 0.2450 0.3500 0.1810  0.1300 0.1120 0.4610 0.0017
0.0000 0.0000 0.0000
exac8b  19612 "ARROYEP2"  13.80 "1 " : #9 0.010000  58.0000  7.0000  28.0000 0.070000 0.100000 0.016666  47.0000 0.0 1.000000  1.8000 0.060000  1.7800  7.1000
0.410000  9.4000  4.0100 0.0 0.050000
ggov1  19612 "ARROYEP2"  13.80 "1 " : #9 mwcap=60.5000 0.050000 1.000000 0.400000  10.0000 -10.0000  2.5000  1.2000 0.0 0.016666 1.000000  0.0 0.200000  2.4000
0.270000  2.0000 1.000000 1.000000 0.0 0.500000  4.0000  2.0000 1.000000 0.0 1.000000 -1.000000 0.010000  50.0000 0.010000  10.0000 1.000000  0.0 1.000000 1.000000
99.0000 -99.0000
ieeest  19612 "ARROYEP2"  13.80 "1 " : #9  3.0000 0.0 0.0 0.0 0.0 0.0 0.0 0.0 0.263000 0.016666 0.263000 0.196000  5.0000  5.0000 -0.250000 0.025000 -0.025000  2.0000
0.0 0.0

genrou  19614 "ARROYEP3"  13.80 "1 " : #9 mva=71.1760  9.6700 0.0500 2.9500 0.0500  1.1700 0.0000 2.3500 2.1500 0.2450 0.3500 0.1810  0.1300 0.1120 0.4610 0.0017
0.0000 0.0000 0.0000
exac8b  19614 "ARROYEP3"  13.80 "1 " : #9 0.010000  58.0000  7.0000  28.0000 0.070000 0.100000 0.016666  47.0000 0.0 1.000000  1.8000 0.060000  1.7800  7.1000
0.410000  9.4000  4.0100 0.0 0.050000
ggov1  19614 "ARROYEP3"  13.80 "1 " : #9 mwcap=60.5000 0.050000 1.000000 0.400000  10.0000 -10.0000  2.5000  1.2000 0.0 0.016666 1.000000  0.0 0.200000  2.4000
0.270000  2.0000 1.000000 1.000000 0.0 0.500000  4.0000  2.0000 1.000000 0.0 1.000000 -1.000000 0.010000  50.0000 0.010000  10.0000 1.000000  0.0 1.000000 1.000000
99.0000 -99.0000
ieeest  19614 "ARROYEP3"  13.80 "1 " : #9  3.0000 0.0 0.0 0.0 0.0 0.0 0.0 0.0 0.263000 0.016666 0.263000 0.196000  5.0000  5.0000 -0.250000 0.025000 -0.025000  2.0000
0.0 0.0

genrou  19616 "ARROYEP4"  13.80 "1 " : #9 mva=71.1760  9.6700 0.0500 2.9500 0.0500 1.1700 0.0000 2.3500 2.1500 0.2450 0.3500 0.1810  0.1300 0.1120 0.4610 0.0017
0.0000 0.0000 0.0000
exac8b  19616 "ARROYEP4"  13.80 "1 " : #9 0.010000  58.0000  7.0000  28.0000 0.070000 0.100000 0.016666  47.0000 0.0 1.000000  1.8000 0.060000  1.7800  7.1000
0.410000  9.4000  4.0100 0.0 0.050000
ggov1  19616 "ARROYEP4"  13.80 "1 " : #9 mwcap=60.5000 0.050000 1.000000 0.400000  10.0000 -10.0000  2.5000  1.2000 0.0 0.016666 1.000000  0.0 0.200000  2.4000
0.270000  2.0000 1.000000 1.000000 0.0 0.500000  4.0000  2.0000 1.000000 0.0 1.000000 -1.000000 0.010000  50.0000 0.010000  10.0000 1.000000  0.0 1.000000 1.000000
99.0000 -99.0000
ieeest  19616 "ARROYEP4"  13.80 "1 " : #9  3.0000 0.0 0.0 0.0 0.0 0.0 0.0 0.0 0.263000 0.016666 0.263000 0.196000  5.0000  5.0000 -0.250000 0.025000 -0.025000  2.0000
0.0 0.0
```

Appendix E

Transient Stability Plots

2008 HEAVY AUTUMN – LIBERTY PHASE-SHIFT TRANSFORMER IN-SERVICE.

Pre-Project Base Cases – Minimum WAPA-DSW Generation

Plot 1. Three-phase fault on the McConnico 230kV bus followed by loss of the Davis-McConnico 230 kV line.

Plot 2. The Griffith – Peacock 230 kV line out-of-service and the system re-adjusted followed by a three-phase fault on the McConnico 230kV bus followed by loss of the Davis-McConnico 230 kV line.

Plot 3. The Peacock 345/230 kV transformer out-of-service and the system re-adjusted followed by a three-phase fault on the McConnico 230kV bus followed by loss of the Davis-McConnico 230 kV line.

Plot 3a. The Peacock 345/230 kV transformer out-of-service and the system re-adjusted followed by a three-phase fault on the McConnico 230kV bus followed by loss of the Davis-McConnico 230 kV line – ***Griffith Generation output is reduced to 520 MW***.

Pre-Project Base Cases – Maximum WAPA-DSW Generation

Plot 4. Three-phase fault on the McConnico 230kV bus followed by loss of the Davis-McConnico 230 kV line.

Plot 5. The Griffith – Peacock 230 kV line out-of-service and the system re-adjusted followed by a three-phase fault on the McConnico 230kV bus followed by loss of the Davis-McConnico 230 kV line.

Plot 6. The Peacock 345/230 kV transformer out-of-service and the system re-adjusted followed by a three-phase fault on the McConnico 230kV bus followed by loss of the Davis-McConnico 230 kV line.

Post-Project Base Cases – Minimum WAPA-DSW Generation

Plot 7. The Griffith – Peacock 230 kV line out-of-service and the system re-adjusted followed by a three-phase fault on the McConnico 230kV bus followed by loss of the Davis-McConnico 230 kV line – ***Area Interchange***.

Plot 8. The Griffith – Peacock 230 kV line out-of-service and the system re-adjusted followed by a three-phase fault on the McConnico 230kV bus followed by loss of the Davis-McConnico 230 kV line – ***Area Interchange – Generation Reduced based on Flow Limit***.

Plot 9. The Griffith – Peacock 230 kV line out-of-service and the system re-adjusted followed by a three-phase fault on the McConnico 230kV bus followed by loss of the Davis-McConnico 230 kV line – ***Serving Regional Load***.

Plot 10. The Griffith – Peacock 230 kV line out-of-service and the system re-adjusted followed by a three-phase fault on the McConnico 230kV bus followed by loss of the Davis-McConnico 230 kV line – ***Serving Regional Load – Generation Reduced based on Flow Limit***.

Post-Project Base Cases – Maximum WAPA-DSW Generation

Plot 11. The Griffith – Peacock 230 kV line out-of-service and the system re-adjusted followed by a three-phase fault on the McConnico 230kV bus followed by loss of the Davis-McConnico 230 kV line – ***Area Interchange***.

Plot 12. The Griffith – Peacock 230 kV line out-of-service and the system re-adjusted followed by a three-phase fault on the McConnico 230kV bus followed by loss of the Davis-McConnico 230 kV line – ***Area Interchange – Generation Reduced based on Flow Limit***.

Plot 13. The Griffith – Peacock 230 kV line out-of-service and the system re-adjusted followed by a three-phase fault on the McConnico 230kV bus followed by loss of the Davis-McConnico 230 kV line – ***Serving Regional Load***.

Plot 14. The Griffith – Peacock 230 kV line out-of-service and the system re-adjusted followed by a three-phase fault on the McConnico 230kV bus followed by loss of the Davis-McConnico 230 kV line – ***Serving Regional Load – Generation Reduced based on Flow Limit***.

2008 HEAVY AUTUMN – LIBERTY PHASE-SHIFT TRANSFORMER BY-PASSED

Pre-Project Base Cases – Minimum WAPA-DSW Generation

Plot 15. Three-phase fault on the McConnico 230kV bus followed by loss of the Davis-McConnico 230 kV line.

Plot 16. The Griffith – Peacock 230 kV line out-of-service and the system re-adjusted followed by a three-phase fault on the McConnico 230kV bus followed by loss of the Davis-McConnico 230 kV line.

Plot 17. The Peacock 345/230 kV transformer out-of-service and the system re-adjusted followed by a three-phase fault on the McConnico 230kV bus followed by loss of the Davis-McConnico 230 kV line.

Pre-Project Base Cases – Maximum WAPA-DSW Generation

Plot 18. Three-phase fault on the McConnico 230kV bus followed by loss of the Davis-McConnico 230 kV line.

Plot 19. The Griffith – Peacock 230 kV line out-of-service and the system re-adjusted followed by a three-phase fault on the McConnico 230kV bus followed by loss of the Davis-McConnico 230 kV line.

Plot 20. The Peacock 345/230 kV transformer out-of-service and the system re-adjusted followed by a three-phase fault on the McConnico 230kV bus followed by loss of the Davis-McConnico 230 kV line.

Post-Project Base Cases – Minimum WAPA-DSW Generation

Plot 21. The Griffith – Peacock 230 kV line out-of-service and the system re-adjusted followed by a three-phase fault on the McConnico 230kV bus followed by loss of the Davis-McConnico 230 kV line – ***Area Interchange***.

Plot 22. The Griffith – Peacock 230 kV line out-of-service and the system re-adjusted followed by a three-phase fault on the McConnico 230kV bus followed by loss of the Davis-McConnico 230 kV line – ***Area Interchange – Generation Reduced based on Flow Limit***.

Plot 23. The Griffith – Peacock 230 kV line out-of-service and the system re-adjusted followed by a three-phase fault on the McConnico 230kV bus followed by loss of the Davis-McConnico 230 kV line – ***Serving Regional Load***.

Plot 24. The Griffith – Peacock 230 kV line out-of-service and the system re-adjusted followed by a three-phase fault on the McConnico 230kV bus followed by loss of the Davis-McConnico 230 kV line – ***Serving Regional Load – Generation Reduced based on Flow Limit***.

Post-Project Base Cases – Maximum WAPA-DSW Generation

Plot 25. The Griffith – Peacock 230 kV line out-of-service and the system re-adjusted followed by a three-phase fault on the McConnico 230kV bus followed by loss of the Davis-McConnico 230 kV line – ***Area Interchange***.

Plot 26. The Griffith – Peacock 230 kV line out-of-service and the system re-adjusted followed by a three-phase fault on the McConnico 230kV bus followed by loss of the Davis-McConnico 230 kV line – ***Area Interchange – Generation Reduced based on Flow Limit***.

Plot 27. The Griffith – Peacock 230 kV line out-of-service and the system re-adjusted followed by a three-phase fault on the McConnico 230kV bus followed by loss of the Davis-McConnico 230 kV line – ***Serving Regional Load***.

Plot 28. The Griffith – Peacock 230 kV line out-of-service and the system re-adjusted followed by a three-phase fault on the McConnico 230kV bus followed by loss of the Davis-McConnico 230 kV line – ***Serving Regional Load – Generation Reduced based on Flow Limit.***

Note: Initially the project was called Arroyo Energy Project; however, the name was changed to Northern Arizona Energy Project or NAEP after studies were completed. Any references to the Arroyo Energy Project should be denoted as the Northern Arizona Energy Project.

NORTHERN ARIZONA ENERGY PROJECT - TRANSIENT STABILITY PLOTS - PAGE 1

BUS VOLTAGE (1)

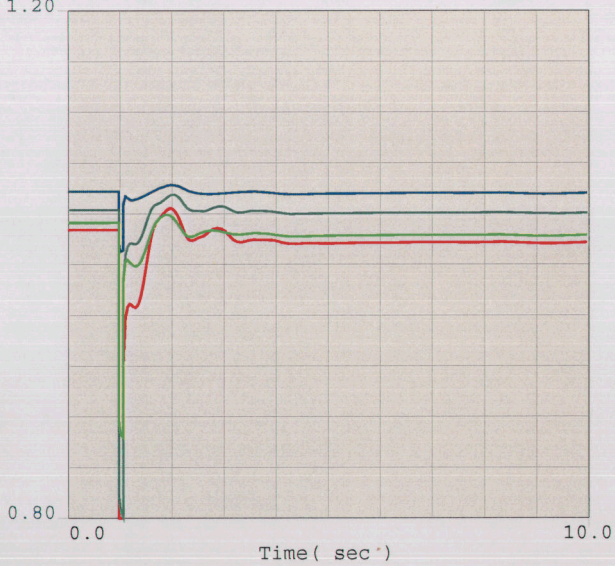

0.8	vbus	19038	MEAD	500.0	1	1	1.2
0.8	vbus	19315	PEACOCK	345.0	1	1	1.2
0.8	vbus	19053	LIBERTY	345.0	1	1	1.2
0.8	vbus	19037	MEAD	345.0	1	1	1.2

BUS VOLTAGE (2)

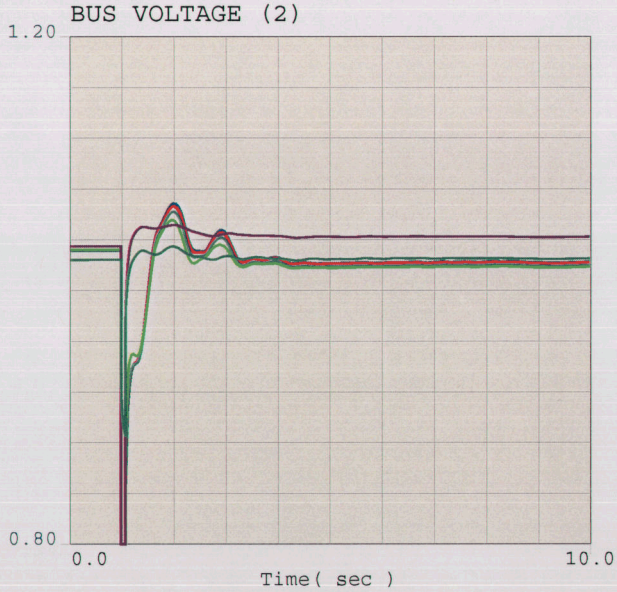

0.8	vbul	19310	GRIFFITH	230.0	1	1	1.2
0.8	vbul	19056	MCCONICO	230.0	1	1	1.2
0.8	vbul	19072	HILLTOP	230.0	1	1	1.2
0.8	vbus	19314	PEACOCK	230.0	1	1	1.2
0.8	vbul	19022	DAVIS	230.0	1	1	1.2
0.8	vbus	19042	PARKER	230.0	1	1	1.2

BUS FREQUENCY (1)

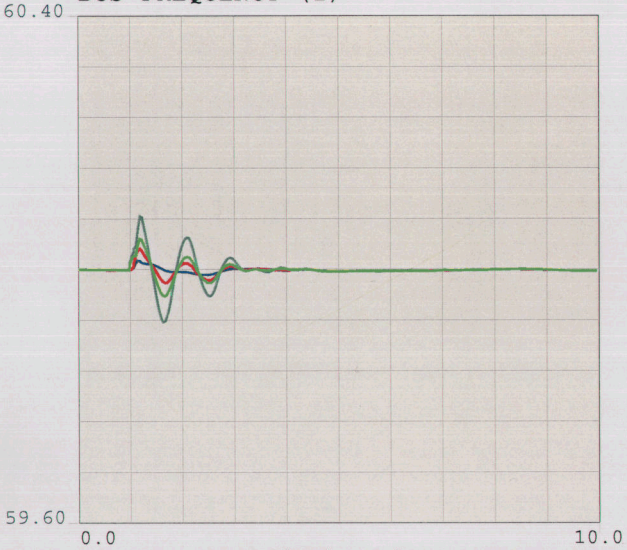

59.6	fbus	19038	MEAD	500.0	1	1	60.4
59.6	fbus	19037	MEAD	345.0	1	1	60.4
59.6	fbus	19315	PEACOCK	345.0	1	1	60.4
59.6	fbus	19053	LIBERTY	345.0	1	1	60.4

BUS FREQUENCY (2)

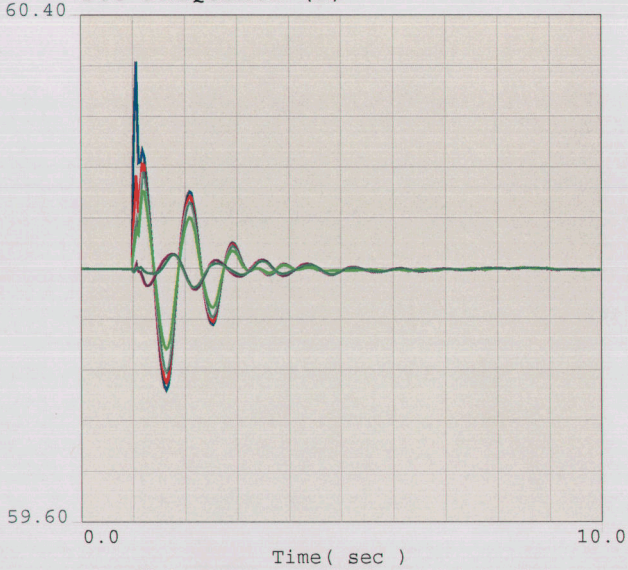

59.6	fbul	19310	GRIFFITH	230.0	1	1	60.4
59.6	fbul	19056	MCCONICO	230.0	1	1	60.4
59.6	fbul	19072	HILLTOP	230.0	1	1	60.4
59.6	fbus	19314	PEACOCK	230.0	1	1	60.4
59.6	fbul	19022	DAVIS	230.0	1	1	60.4
59.6	fbus	19042	PARKER	230.0	1	1	60.4

2008 HEAVY AUTUMN, NORTHERN ARIZONA ENERGY PROJECT, PRE-PROJECT
CASE: 08ha_pre-rev1.sav
EOR=9300MW, Min WAPA-DSW Generation Modeled.
Mohave Off-Line.

NORTHERN ARIZONA ENERGY PROJECT - TRANSIENT STABILITY PLOTS - PAGE 1

BUS VOLTAGE (1)

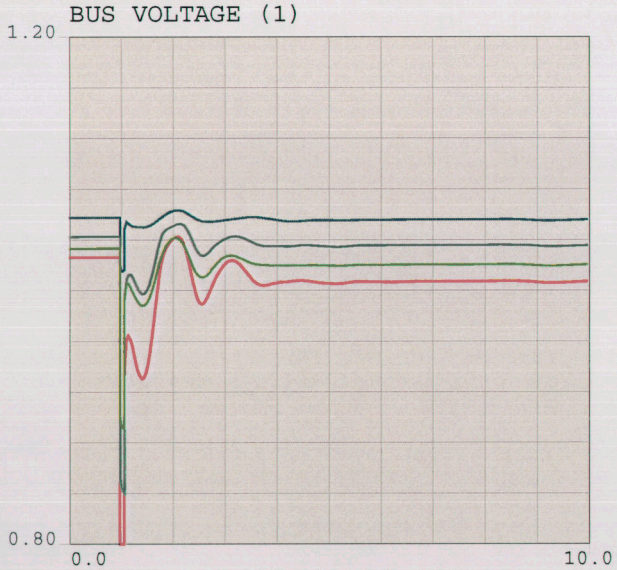

0.8	vbus	19038	MEAD	500.0	1	1	1.2
0.8	vbus	19315	PEACOCK	345.0	1	1	1.2
0.8	vbus	19053	LIBERTY	345.0	1	1	1.2
0.8	vbus	19037	MEAD	345.0	1	1	1.2

BUS VOLTAGE (2)

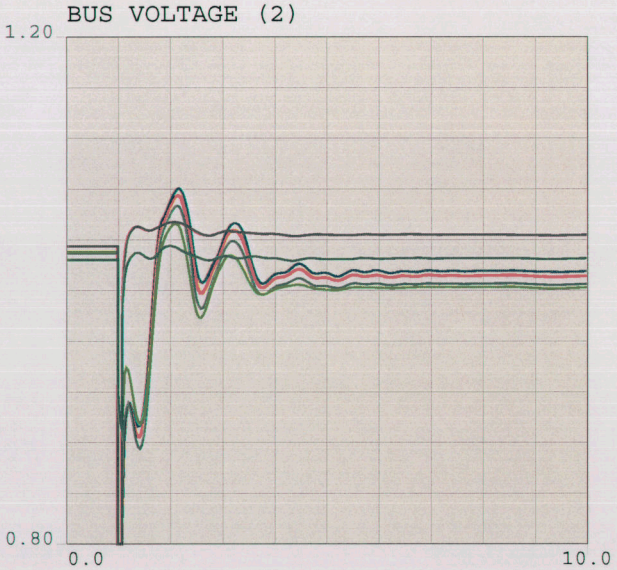

0.8	vbul	19310	GRIFFITH	230.0	1	1	1.2
0.8	vbul	19056	MCCONICO	230.0	1	1	1.2
0.8	vbul	19072	HILLTOP	230.0	1	1	1.2
0.8	vbus	19314	PEACOCK	230.0	1	1	1.2
0.8	vbul	19022	DAVIS	230.0	1	1	1.2
0.8	vbus	19042	PARKER	230.0	1	1	1.2

BUS FREQUENCY (1)

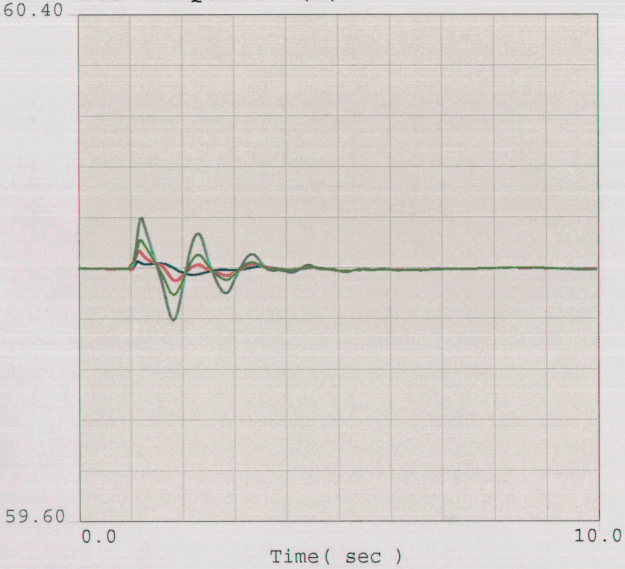

59.6	fbus	19038	MEAD	500.0	1	1	60.4
59.6	fbus	19037	MEAD	345.0	1	1	60.4
59.6	fbus	19315	PEACOCK	345.0	1	1	60.4
59.6	fbus	19053	LIBERTY	345.0	1	1	60.4

BUS FREQUENCY (2)

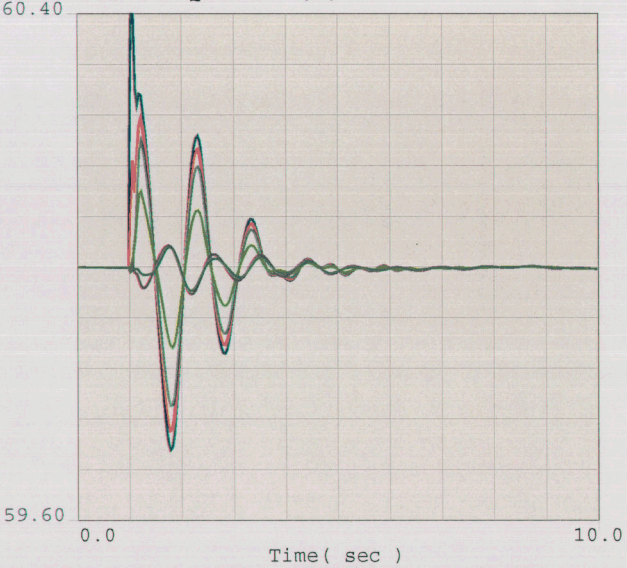

59.6	fbul	19310	GRIFFITH	230.0	1	1	60.4
59.6	fbul	19056	MCCONICO	230.0	1	1	60.4
59.6	fbul	19072	HILLTOP	230.0	1	1	60.4
59.6	fbus	19314	PEACOCK	230.0	1	1	60.4
59.6	fbul	19022	DAVIS	230.0	1	1	60.4
59.6	fbus	19042	PARKER	230.0	1	1	60.4

2008 HEAVY AUTUMN, NORTHERN ARIZONA ENERGY PROJECT, PRE-PROJECT
CASE: 08ha_pre-rev1.sav
EOR=9300MW, Min WAPA-DSW Generation Modeled.
Mohave Off-Line.

NORTHERN ARIZONA ENERGY PROJECT - TRANSIENT STABILITY PLOTS - PAGE 1

BUS VOLTAGE (1)

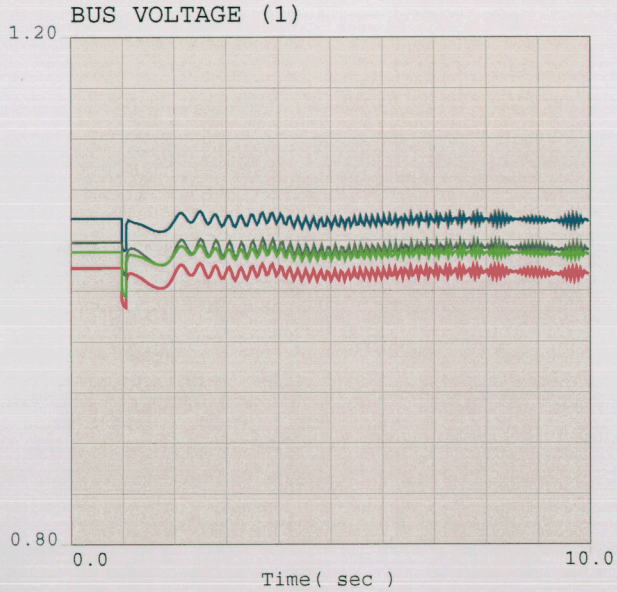

0.8	vbus	19038	MEAD	500.0	1	1	1.2
0.8	vbus	19315	PEACOCK	345.0	1	1	1.2
0.8	vbus	19053	LIBERTY	345.0	1	1	1.2
0.8	vbus	19037	MEAD	345.0	1	1	1.2

BUS VOLTAGE (2)

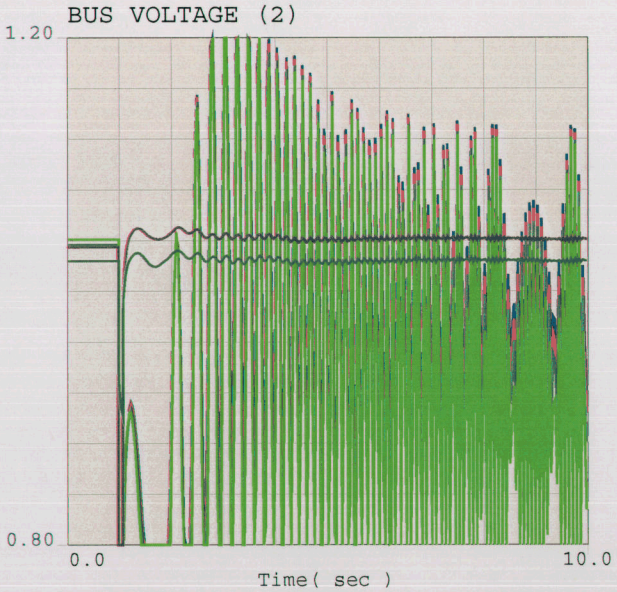

0.8	vbul	19310	GRIFFITH	230.0	1	1	1.2
0.8	vbul	19056	MCCONICO	230.0	1	1	1.2
0.8	vbul	19072	HILLTOP	230.0	1	1	1.2
0.8	vbus	19314	PEACOCK	230.0	1	1	1.2
0.8	vbul	19022	DAVIS	230.0	1	1	1.2
0.8	vbus	19042	PARKER	230.0	1	1	1.2

BUS FREQUENCY (1)

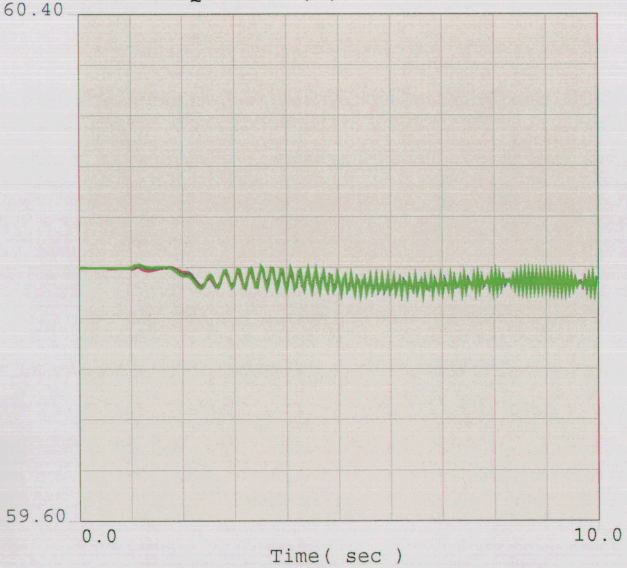

59.6	fbus	19038	MEAD	500.0	1	1	60.4
59.6	fbus	19037	MEAD	345.0	1	1	60.4
59.6	fbus	19315	PEACOCK	345.0	1	1	60.4
59.6	fbus	19053	LIBERTY	345.0	1	1	60.4

BUS FREQUENCY (2)

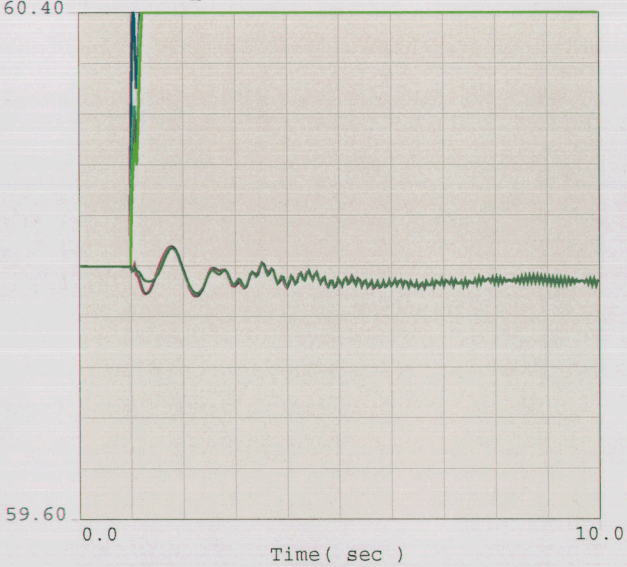

59.6	fbul	19310	GRIFFITH	230.0	1	1	60.4
59.6	fbul	19056	MCCONICO	230.0	1	1	60.4
59.6	fbul	19072	HILLTOP	230.0	1	1	60.4
59.6	fbus	19314	PEACOCK	230.0	1	1	60.4
59.6	fbul	19022	DAVIS	230.0	1	1	60.4
59.6	fbus	19042	PARKER	230.0	1	1	60.4

2008 HEAVY AUTUMN, NORTHERN ARIZONA ENERGY PROJECT, PRE-PROJECT
CASE: 08ha_pre-rev1.sav
EOR=9300MW, Min WAPA-DSW Generation Modeled.
Mohave Off-Line.

NORTHERN ARIZONA ENERGY PROJECT - TRANSIENT STABILITY PLOTS - PAGE 1

BUS VOLTAGE (1)

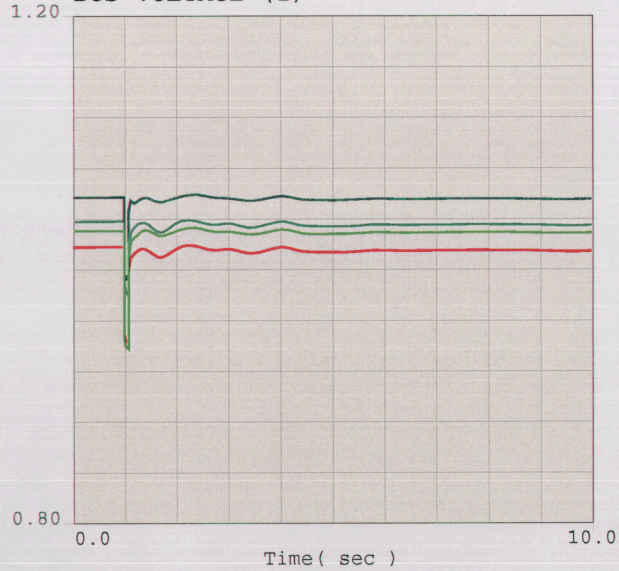

0.8	vbus	19038	MEAD	500.0	1	1	1.2
0.8	vbus	19315	PEACOCK	345.0	1	1	1.2
0.8	vbus	19053	LIBERTY	345.0	1	1	1.2
0.8	vbus	19037	MEAD	345.0	1	1	1.2

BUS VOLTAGE (2)

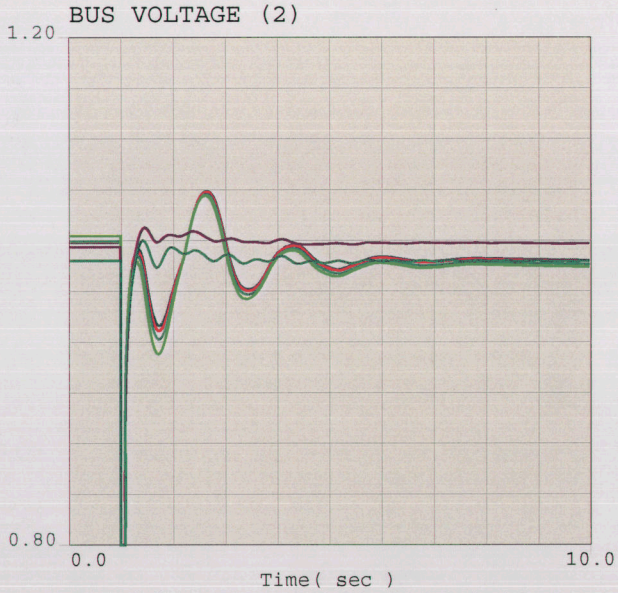

0.8	vbul	19310	GRIFFITH	230.0	1	1	1.2
0.8	vbul	19056	MCCONICO	230.0	1	1	1.2
0.8	vbul	19072	HILLTOP	230.0	1	1	1.2
0.8	vbus	19314	PEACOCK	230.0	1	1	1.2
0.8	vbul	19022	DAVIS	230.0	1	1	1.2
0.8	vbus	19042	PARKER	230.0	1	1	1.2

BUS FREQUENCY (1)

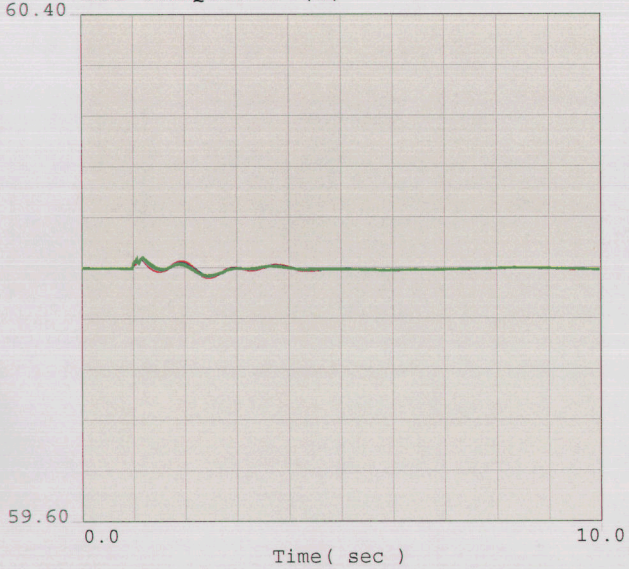

59.6	fbus	19038	MEAD	500.0	1	1	60.4
59.6	fbus	19037	MEAD	345.0	1	1	60.4
59.6	fbus	19315	PEACOCK	345.0	1	1	60.4
59.6	fbus	19053	LIBERTY	345.0	1	1	60.4

BUS FREQUENCY (2)

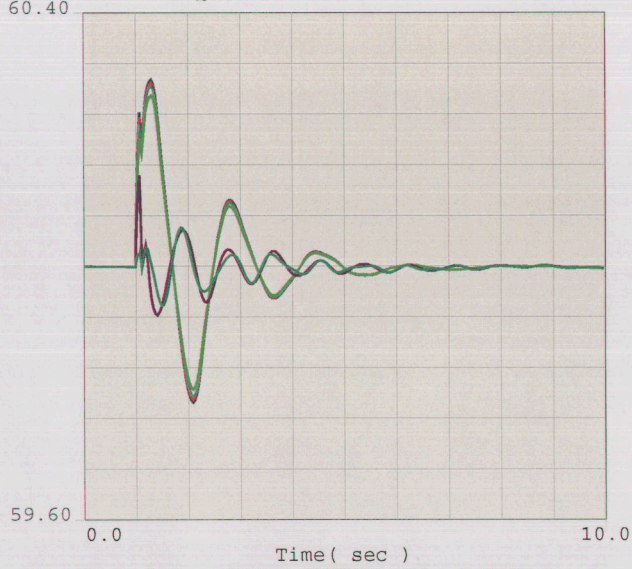

59.6	fbul	19310	GRIFFITH	230.0	1	1	60.4
59.6	fbul	19056	MCCONICO	230.0	1	1	60.4
59.6	fbul	19072	HILLTOP	230.0	1	1	60.4
59.6	fbus	19314	PEACOCK	230.0	1	1	60.4
59.6	fbul	19022	DAVIS	230.0	1	1	60.4
59.6	fbus	19042	PARKER	230.0	1	1	60.4

2008 HEAVY AUTUMN, NORTHERN ARIZONA ENERGY PROJECT, PRE-PROJECT
CASE: 08ha_pre-rev1.sav
EOR=9300MW, Min WAPA-DSW Generation Modeled.
Mohave Off-Line.

NORTHERN ARIZONA ENERGY PROJECT - TRANSIENT STABILITY PLOTS - PAGE 1

BUS VOLTAGE (1)

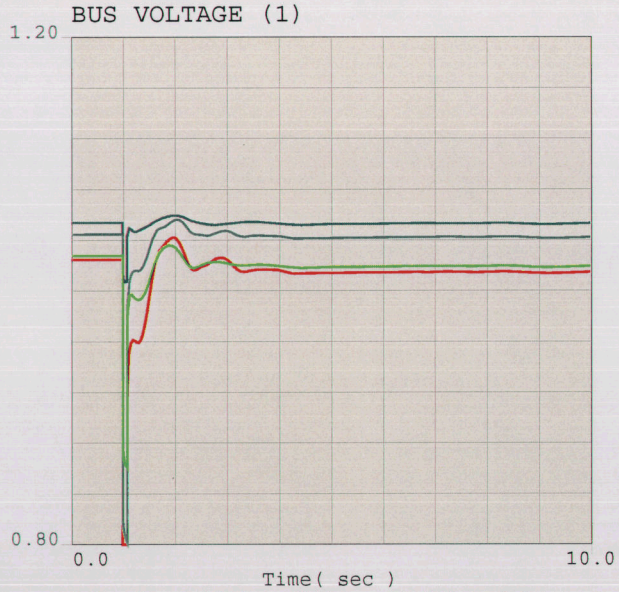

0.8	vbus	19038	MEAD	500.0	1	1	1.2
0.8	vbus	19315	PEACOCK	345.0	1	1	1.2
0.8	vbus	19053	LIBERTY	345.0	1	1	1.2
0.8	vbus	19037	MEAD	345.0	1	1	1.2

BUS VOLTAGE (2)

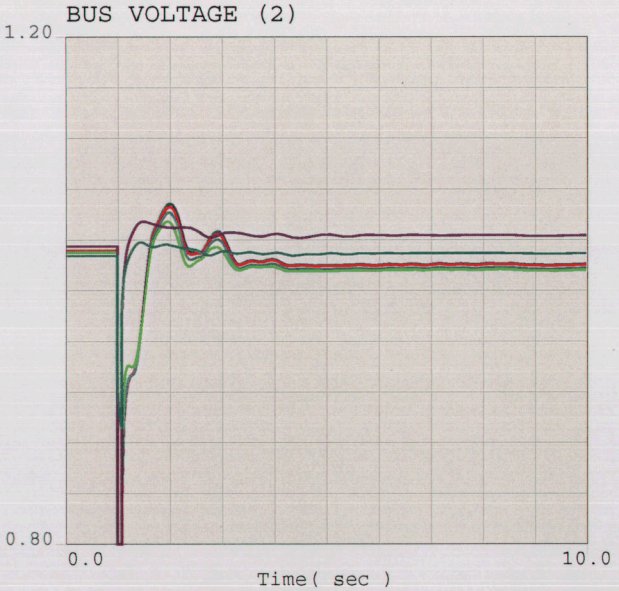

0.8	vbul	19310	GRIFFITH	230.0	1	1	1.2
0.8	vbul	19056	MCCONICO	230.0	1	1	1.2
0.8	vbul	19072	HILLTOP	230.0	1	1	1.2
0.8	vbus	19314	PEACOCK	230.0	1	1	1.2
0.8	vbul	19022	DAVIS	230.0	1	1	1.2
0.8	vbus	19042	PARKER	230.0	1	1	1.2

BUS FREQUENCY (1)

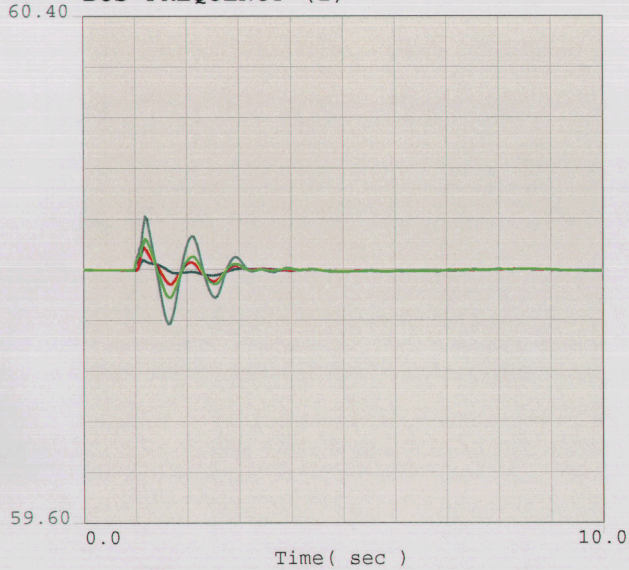

59.6	fbus	19038	MEAD	500.0	1	1	60.4
59.6	fbus	19037	MEAD	345.0	1	1	60.4
59.6	fbus	19315	PEACOCK	345.0	1	1	60.4
59.6	fbus	19053	LIBERTY	345.0	1	1	60.4

BUS FREQUENCY (2)

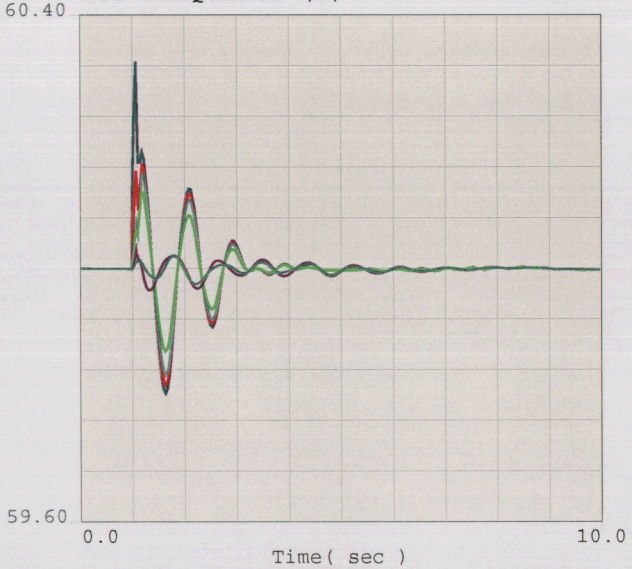

59.6	fbul	19310	GRIFFITH	230.0	1	1	60.4
59.6	fbul	19056	MCCONICO	230.0	1	1	60.4
59.6	fbul	19072	HILLTOP	230.0	1	1	60.4
59.6	fbus	19314	PEACOCK	230.0	1	1	60.4
59.6	fbul	19022	DAVIS	230.0	1	1	60.4
59.6	fbus	19042	PARKER	230.0	1	1	60.4

2008 HEAVY AUTUMN, NORTHERN ARIZONA ENERGY PROJECT, PRE-PROJECT
CASE: 08ha_pre_max-rev1.sav
EOR=9300MW, Maximum WAPA-DSW Generation Modeled.
Mohave Off-line.

NORTHERN ARIZONA ENERGY PROJECT - TRANSIENT STABILITY PLOTS - PAGE 1

BUS VOLTAGE (1)

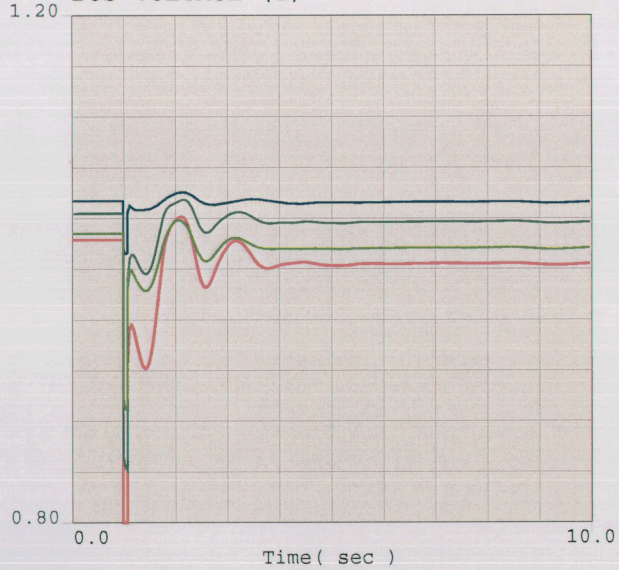

0.8	vbus	19038	MEAD	500.0	1	1	1.2
0.8	vbus	19315	PEACOCK	345.0	1	1	1.2
0.8	vbus	19053	LIBERTY	345.0	1	1	1.2
0.8	vbus	19037	MEAD	345.0	1	1	1.2

BUS VOLTAGE (2)

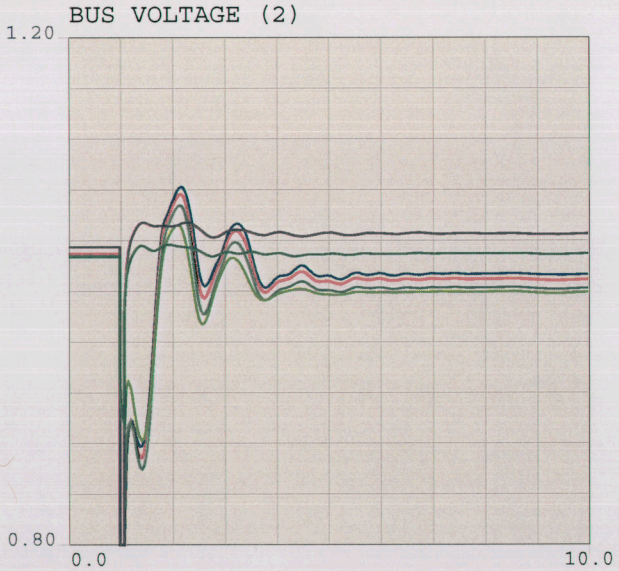

0.8	vbul	19310	GRIFFITH	230.0	1	1	1.2
0.8	vbul	19056	MCCONICO	230.0	1	1	1.2
0.8	vbul	19072	HILLTOP	230.0	1	1	1.2
0.8	vbus	19314	PEACOCK	230.0	1	1	1.2
0.8	vbul	19022	DAVIS	230.0	1	1	1.2
0.8	vbus	19042	PARKER	230.0	1	1	1.2

BUS FREQUENCY (1)

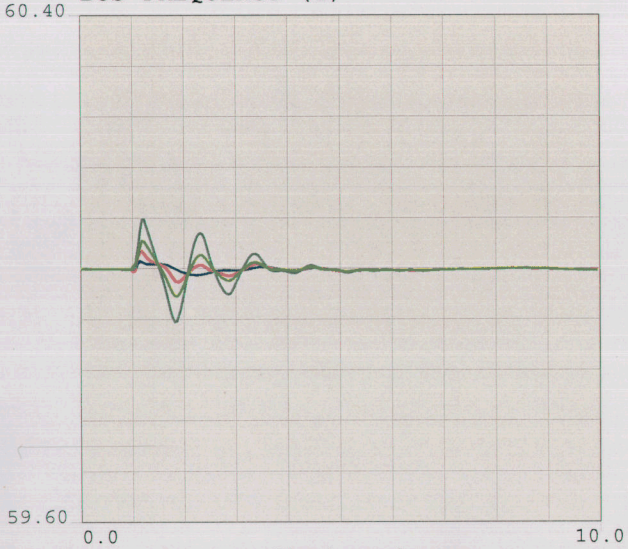

59.6	fbus	19038	MEAD	500.0	1	1	60.4
59.6	fbus	19037	MEAD	345.0	1	1	60.4
59.6	fbus	19315	PEACOCK	345.0	1	1	60.4
59.6	fbus	19053	LIBERTY	345.0	1	1	60.4

BUS FREQUENCY (2)

59.6	fbul	19310	GRIFFITH	230.0	1	1	60.4
59.6	fbul	19056	MCCONICO	230.0	1	1	60.4
59.6	fbul	19072	HILLTOP	230.0	1	1	60.4
59.6	fbus	19314	PEACOCK	230.0	1	1	60.4
59.6	fbul	19022	DAVIS	230.0	1	1	60.4
59.6	fbus	19042	PARKER	230.0	1	1	60.4

2008 HEAVY AUTUMN, NORTHERN ARIZONA ENERGY PROJECT, PRE-PROJECT
CASE: 08ha_pre_max-rev1.sav
EOR=9300MW, Maximum WAPA-DSW Generation Modeled.
Mohave Off-line.

NORTHERN ARIZONA ENERGY PROJECT - TRANSIENT STABILITY PLOTS - PAGE 1

BUS VOLTAGE (1)

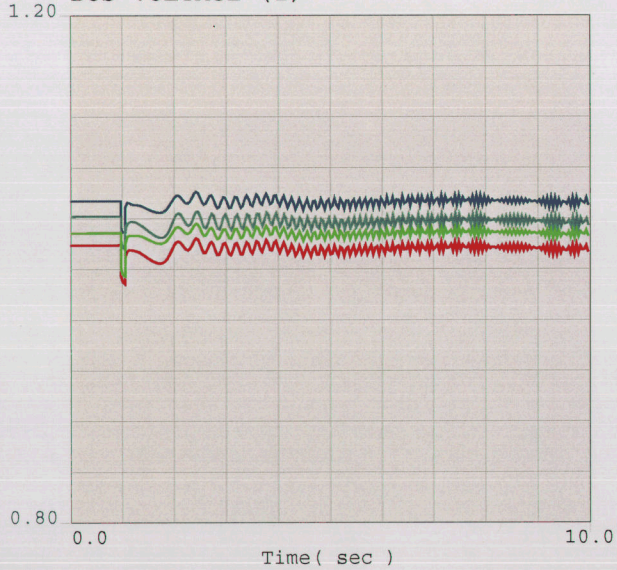

0.8	vbus	19038	MEAD	500.0	1	1	1.2
0.8	vbus	19315	PEACOCK	345.0	1	1	1.2
0.8	vbus	19053	LIBERTY	345.0	1	1	1.2
0.8	vbus	19037	MEAD	345.0	1	1	1.2

BUS VOLTAGE (2)

0.8	vbul	19310	GRIFFITH	230.0	1	1	1.2
0.8	vbul	19056	MCCONICO	230.0	1	1	1.2
0.8	vbul	19072	HILLTOP	230.0	1	1	1.2
0.8	vbus	19314	PEACOCK	230.0	1	1	1.2
0.8	vbul	19022	DAVIS	230.0	1	1	1.2
0.8	vbus	19042	PARKER	230.0	1	1	1.2

BUS FREQUENCY (1)

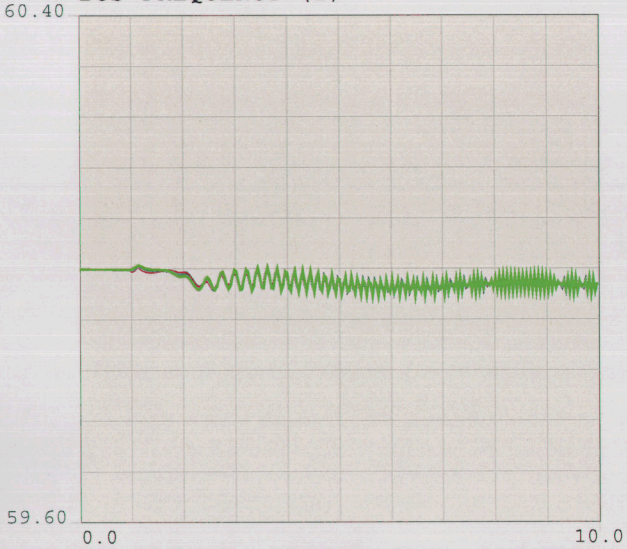

59.6	fbus	19038	MEAD	500.0	1	1	60.4
59.6	fbus	19037	MEAD	345.0	1	1	60.4
59.6	fbus	19315	PEACOCK	345.0	1	1	60.4
59.6	fbus	19053	LIBERTY	345.0	1	1	60.4

BUS FREQUENCY (2)

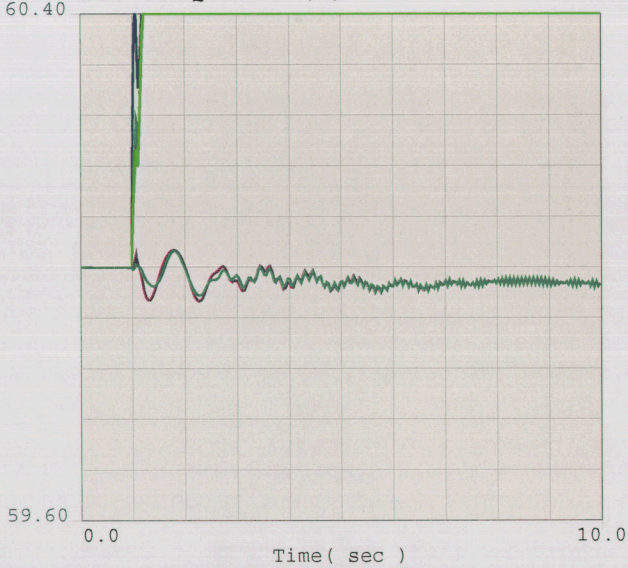

59.6	fbul	19310	GRIFFITH	230.0	1	1	60.4
59.6	fbul	19056	MCCONICO	230.0	1	1	60.4
59.6	fbul	19072	HILLTOP	230.0	1	1	60.4
59.6	fbus	19314	PEACOCK	230.0	1	1	60.4
59.6	fbul	19022	DAVIS	230.0	1	1	60.4
59.6	fbus	19042	PARKER	230.0	1	1	60.4

2008 HEAVY AUTUMN, NORTHERN ARIZONA ENERGY PROJECT, PRE-PROJECT
CASE: 08ha_pre_max-rev1.sav
EOR=9300MW, Maximum WAPA-DSW Generation Modeled.
Mohave Off-line.

NORTHERN ARIZONA ENERGY PROJECT - TRANSIENT STABILITY PLOTS - PAGE 1

BUS VOLTAGE (1)

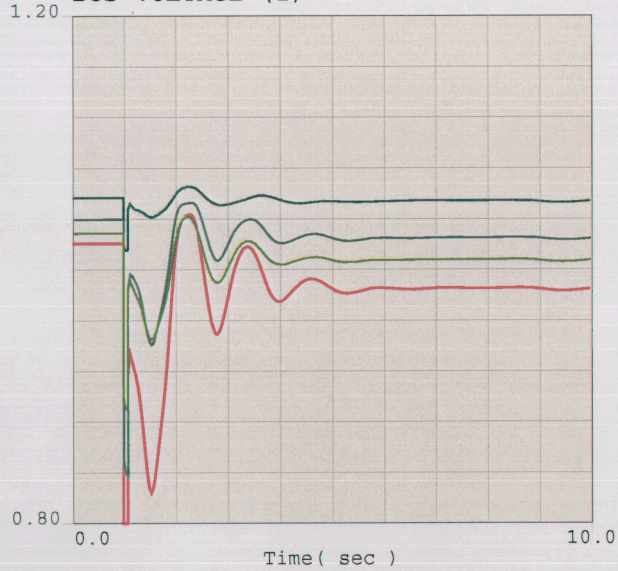

0.8	vbus	19038	MEAD	500.0	1	1	1.2
0.8	vbus	19315	PEACOCK	345.0	1	1	1.2
0.8	vbus	19053	LIBERTY	345.0	1	1	1.2
0.8	vbus	19037	MEAD	345.0	1	1	1.2

BUS VOLTAGE (2)

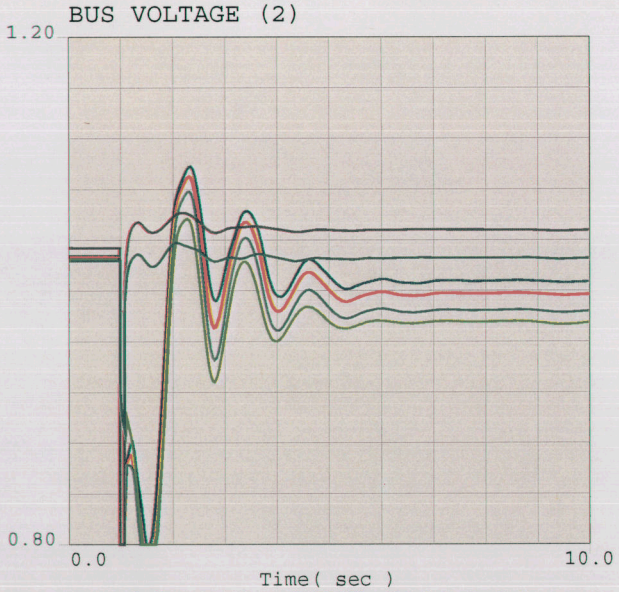

0.8	vbul	19310	GRIFFITH	230.0	1	1	1.2
0.8	vbul	19056	MCCONICO	230.0	1	1	1.2
0.8	vbul	19072	HILLTOP	230.0	1	1	1.2
0.8	vbus	19314	PEACOCK	230.0	1	1	1.2
0.8	vbul	19022	DAVIS	230.0	1	1	1.2
0.8	vbus	19042	PARKER	230.0	1	1	1.2

BUS FREQUENCY (1)

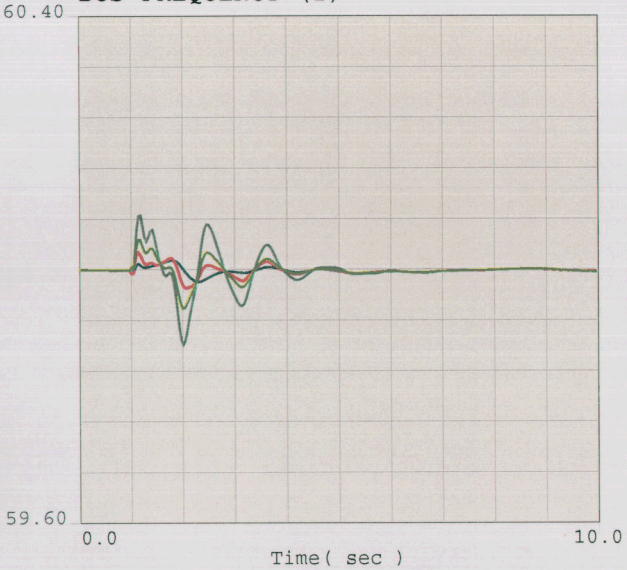

59.6	fbus	19038	MEAD	500.0	1	1	60.4
59.6	fbus	19037	MEAD	345.0	1	1	60.4
59.6	fbus	19315	PEACOCK	345.0	1	1	60.4
59.6	fbus	19053	LIBERTY	345.0	1	1	60.4

BUS FREQUENCY (2)

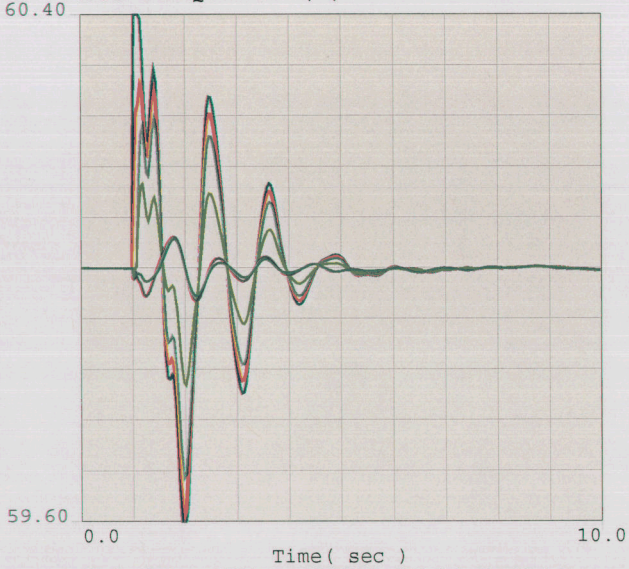

59.6	fbul	19310	GRIFFITH	230.0	1	1	60.4
59.6	fbul	19056	MCCONICO	230.0	1	1	60.4
59.6	fbul	19072	HILLTOP	230.0	1	1	60.4
59.6	fbus	19314	PEACOCK	230.0	1	1	60.4
59.6	fbul	19022	DAVIS	230.0	1	1	60.4
59.6	fbus	19042	PARKER	230.0	1	1	60.4

2008 HEAVY AUTUMN, NORTHERN ARIZONA ENERGY PROJECT, POST-PROJECT - Area Interchange
CASE: 08ha_pst_AI-rev1.sav
EOR=9300MW, Minimum WAPA-DSW Generation Modeled.
Mohave Off-Line.
Modeled Northern Arizona Energy Project - 180 MW Net

NORTHERN ARIZONA ENERGY PROJECT - TRANSIENT STABILITY PLOTS - PAGE 2

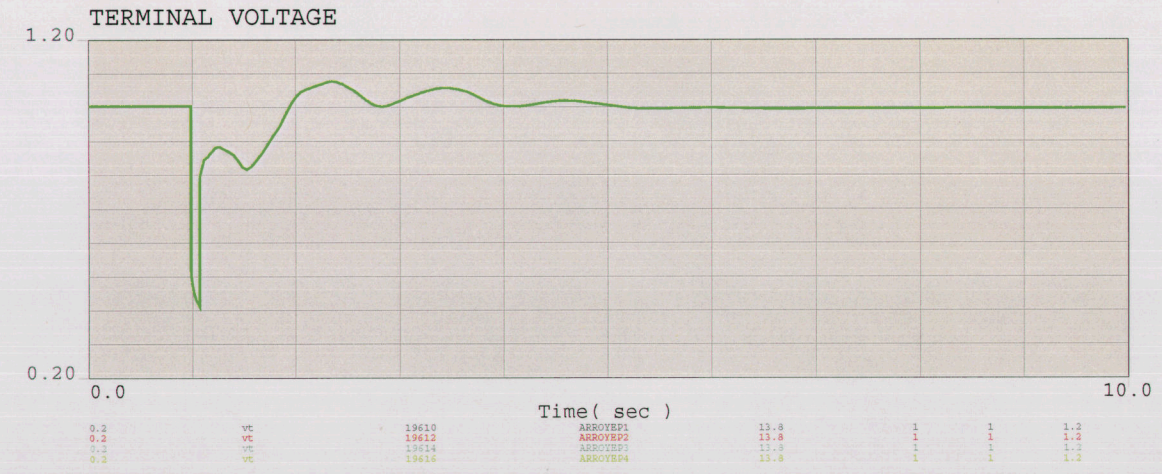

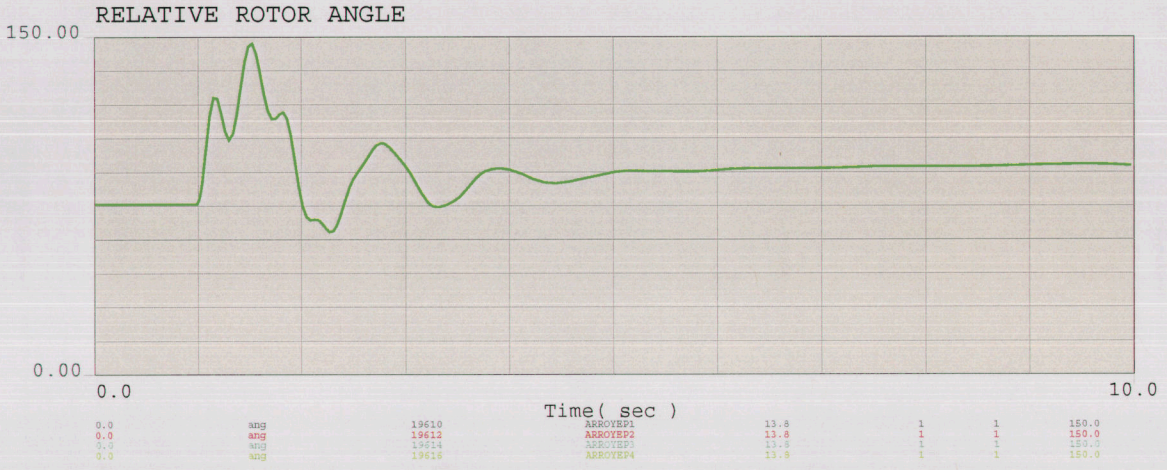

2008 HEAVY AUTUMN, NORTHERN ARIZONA ENERGY PROJECT, POST-PROJECT - Area Interchange
CASE: 08ha_pst_AI-rev1.sav
EOR=9300MW, Minimum WAPA-DSW Generation Modeled.
Mohave Off-Line.
Modeled Northern Arizona Energy Project - 180 MW Net

NORTHERN ARIZONA ENERGY PROJECT - TRANSIENT STABILITY PLOTS - PAGE 1

BUS VOLTAGE (1)

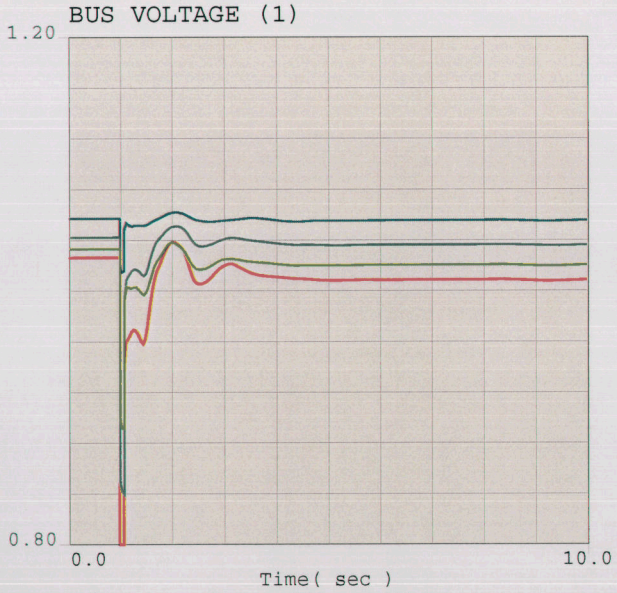

0.8	vbus	19038	MEAD	500.0	1	1	1.2
0.8	vbus	19315	PEACOCK	345.0	1	1	1.2
0.8	vbus	19053	LIBERTY	345.0	1	1	1.2
0.8	vbus	19037	MEAD	345.0	1	1	1.2

BUS VOLTAGE (2)

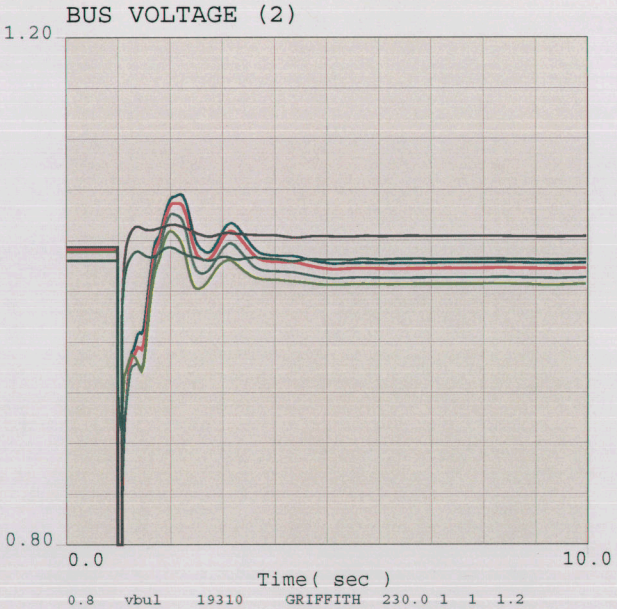

0.8	vbul	19310	GRIFFITH	230.0	1	1	1.2
0.8	vbul	19056	MCCONICO	230.0	1	1	1.2
0.8	vbul	19072	HILLTOP	230.0	1	1	1.2
0.8	vbus	19314	PEACOCK	230.0	1	1	1.2
0.8	vbul	19022	DAVIS	230.0	1	1	1.2
0.8	vbus	19042	PARKER	230.0	1	1	1.2

BUS FREQUENCY (1)

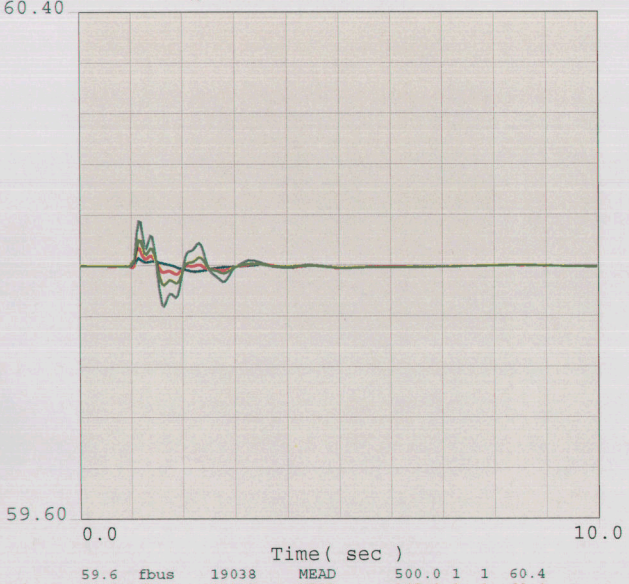

59.6	fbus	19038	MEAD	500.0	1	1	60.4
59.6	fbus	19037	MEAD	345.0	1	1	60.4
59.6	fbus	19315	PEACOCK	345.0	1	1	60.4
59.6	fbus	19053	LIBERTY	345.0	1	1	60.4

BUS FREQUENCY (2)

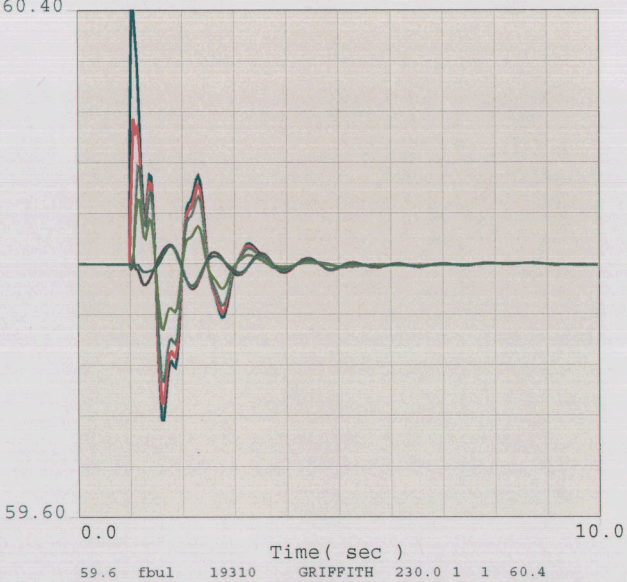

59.6	fbul	19310	GRIFFITH	230.0	1	1	60.4
59.6	fbul	19056	MCCONICO	230.0	1	1	60.4
59.6	fbul	19072	HILLTOP	230.0	1	1	60.4
59.6	fbus	19314	PEACOCK	230.0	1	1	60.4
59.6	fbul	19022	DAVIS	230.0	1	1	60.4
59.6	fbus	19042	PARKER	230.0	1	1	60.4

2008 HEAVY AUTUMN, NORTHERN ARIZONA ENERGY PROJECT, POST-PROJECT - Area Interchange
CASE: 08ha_pst_AI-rev1.sav
EOR=9300MW, Minimum WAPA-DSW Generation Modeled.
Mohave Off-Line.
Modeled Northern Arizona Energy Project - 180 MW Net

TERMINAL VOLTAGE

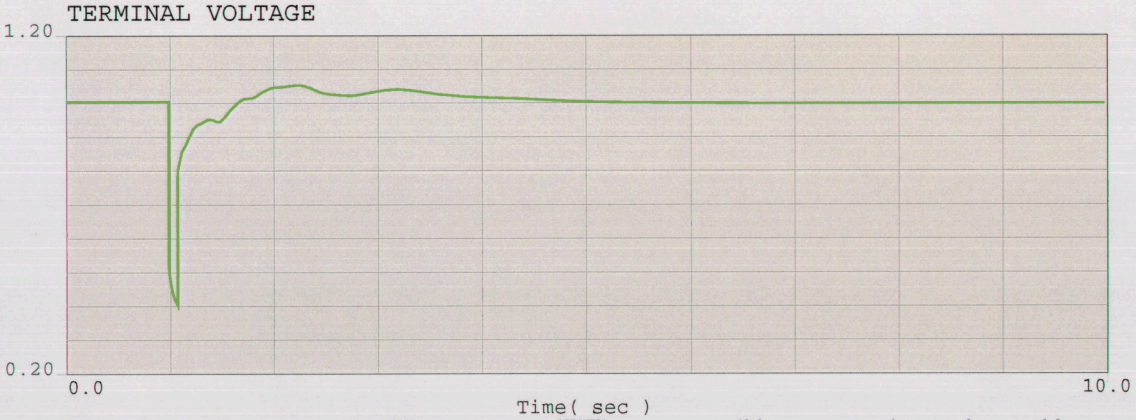

0.2	vt	19610	ARROYEP1	13.8	1	1	1.2
0.2	vt	19612	ARROYEP2	13.8	1	1	1.2
0.2	vt	19614	ARROYEP3	13.8	1	1	1.2
0.2	vt	19616	ARROYEP4	13.8	1	1	1.2

RELATIVE ROTOR ANGLE

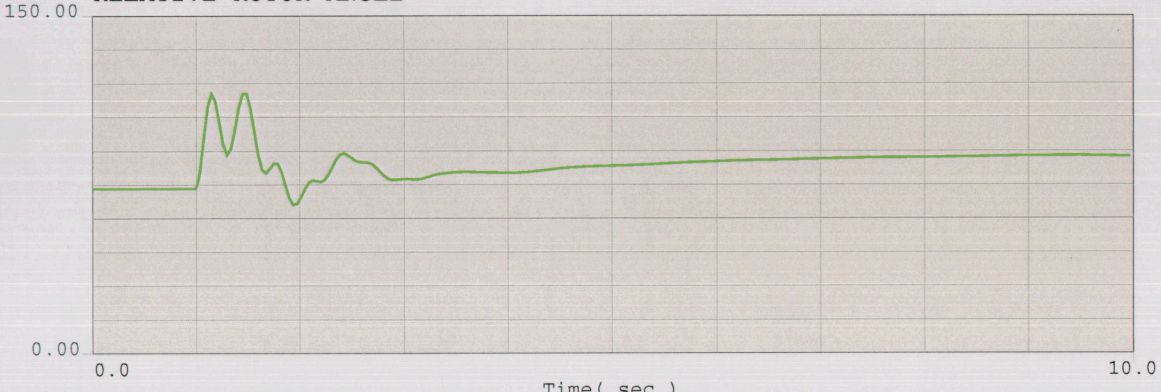

0.0	ang	19610	ARROYEP1	13.8	1	1	150.0
0.0	ang	19612	ARROYEP2	13.8	1	1	150.0
0.0	ang	19614	ARROYEP3	13.8	1	1	150.0
0.0	ang	19616	ARROYEP4	13.8	1	1	150.0

SHAFT SPEED

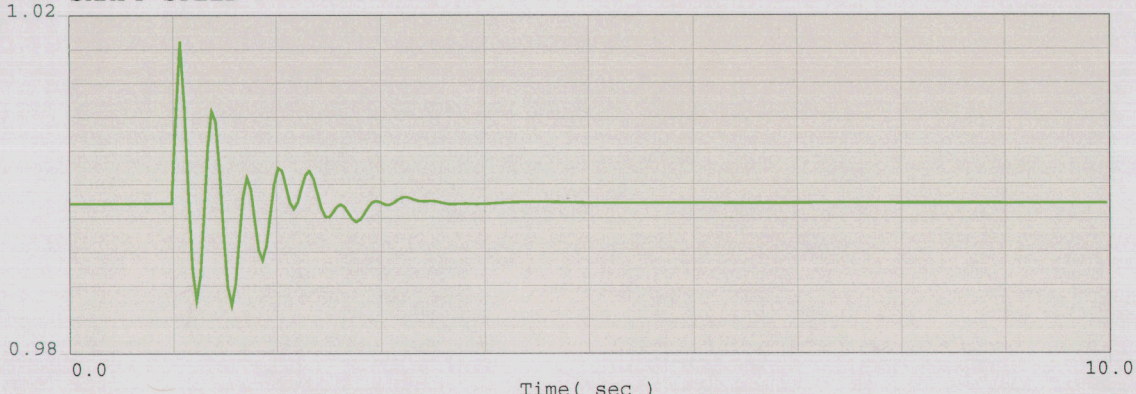

0.98	spd	19610	ARROYEP1	13.8	1	1	1.025
0.98	spd	19612	ARROYEP2	13.8	1	1	1.025
0.98	spd	19614	ARROYEP3	13.8	1	1	1.025
0.98	spd	19616	ARROYEP4	13.8	1	1	1.025

NORTHERN ARIZONA ENERGY PROJECT - TRANSIENT STABILITY PLOTS - PAGE 1

BUS VOLTAGE (1)

0.8	vbus	19038	MEAD	500.0	1	1	1.2
0.8	vbus	19315	PEACOCK	345.0	1	1	1.2
0.8	vbus	19053	LIBERTY	345.0	1	1	1.2
0.8	vbus	19037	MEAD	345.0	1	1	1.2

BUS VOLTAGE (2)

0.8	vbul	19310	GRIFFITH	230.0	1	1	1.2
0.8	vbul	19056	MCCONICO	230.0	1	1	1.2
0.8	vbul	19072	HILLTOP	230.0	1	1	1.2
0.8	vbus	19314	PEACOCK	230.0	1	1	1.2
0.8	vbul	19022	DAVIS	230.0	1	1	1.2
0.8	vbus	19042	PARKER	230.0	1	1	1.2

BUS FREQUENCY (1)

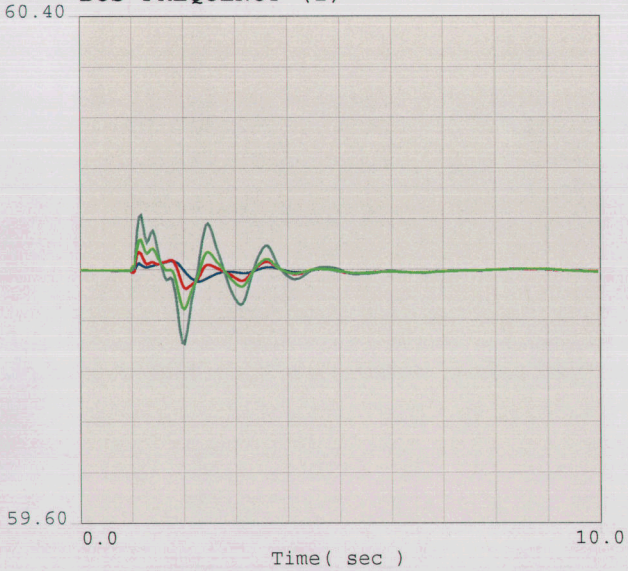

59.6	fbus	19038	MEAD	500.0	1	1	60.4
59.6	fbus	19037	MEAD	345.0	1	1	60.4
59.6	fbus	19315	PEACOCK	345.0	1	1	60.4
59.6	fbus	19053	LIBERTY	345.0	1	1	60.4

BUS FREQUENCY (2)

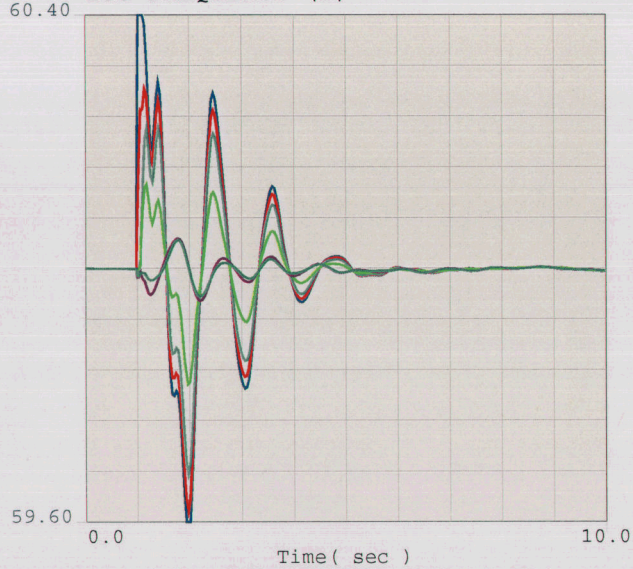

59.6	fbul	19310	GRIFFITH	230.0	1	1	60.4
59.6	fbul	19056	MCCONICO	230.0	1	1	60.4
59.6	fbul	19072	HILLTOP	230.0	1	1	60.4
59.6	fbus	19314	PEACOCK	230.0	1	1	60.4
59.6	fbul	19022	DAVIS	230.0	1	1	60.4
59.6	fbus	19042	PARKER	230.0	1	1	60.4

2008 HEAVY AUTUMN, NORTHERN ARIZONA ENERGY PROJECT, POST-PROJECT - UNS Load Increased
CASE: 08ha_pst_LD-rev1.sav
EOR=9300MW, Minimum WAPA-DSW Generation Modeled.
Mohave Off-Line.
Modeled Northern Arizona Energy Project - 180 MW Net

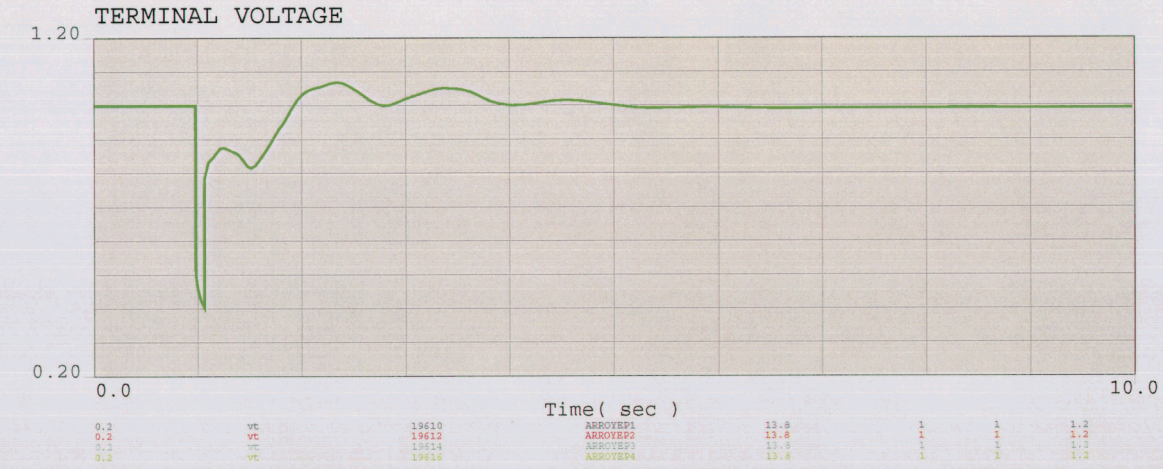

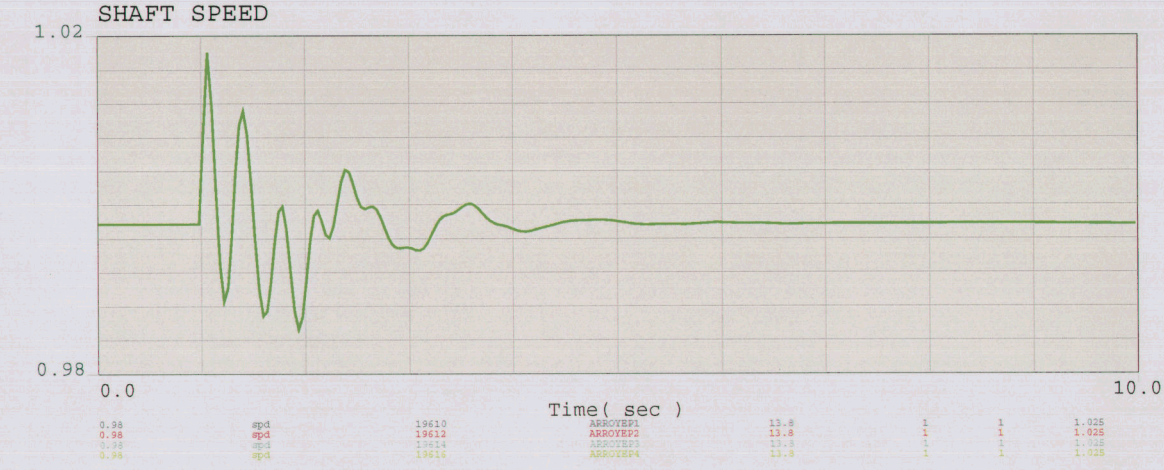

2008 HEAVY AUTUMN, NORTHERN ARIZONA ENERGY PROJECT, POST-PROJECT - UNS Load Increased
CASE: 08ha_pst_LD-rev1.sav
EOR=9300MW, Minimum WAPA-DSW Generation Modeled.
Mohave Off-Line.
Modeled Northern Arizona Energy Project - 180 MW Net

NORTHERN ARIZONA ENERGY PROJECT - TRANSIENT STABILITY PLOTS - PAGE 1

BUS VOLTAGE (1)

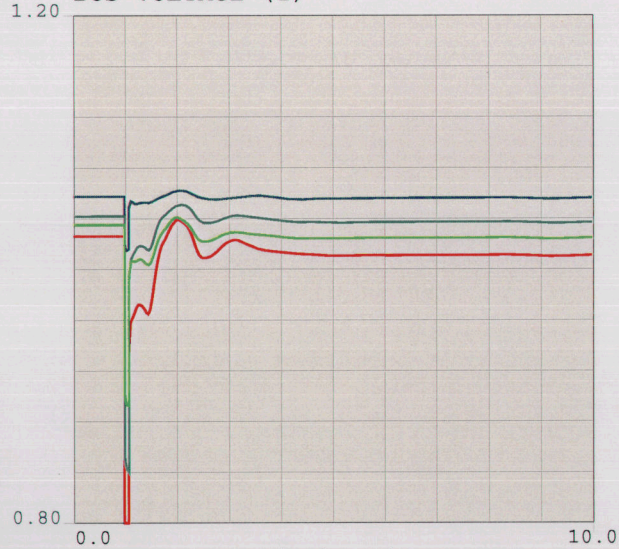

0.8	vbus	19038	MEAD	500.0	1	1	1.2
0.8	vbus	19315	PEACOCK	345.0	1	1	1.2
0.8	vbus	19053	LIBERTY	345.0	1	1	1.2
0.8	vbus	19037	MEAD	345.0	1	1	1.2

BUS VOLTAGE (2)

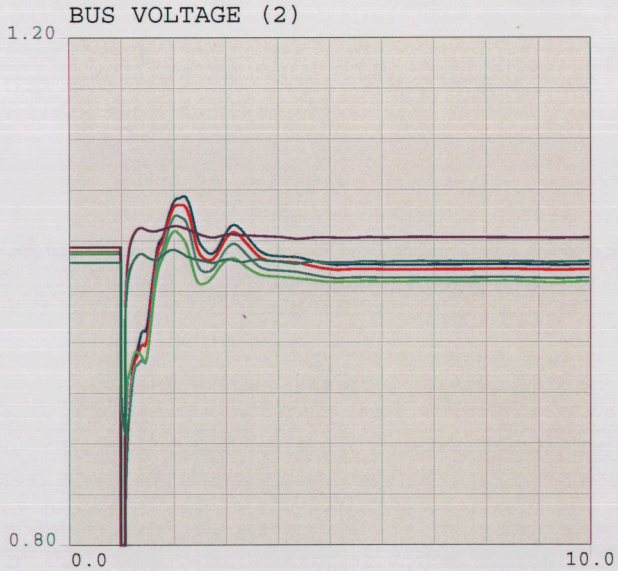

0.8	vbul	19310	GRIFFITH	230.0	1	1	1.2
0.8	vbul	19056	MCCONICO	230.0	1	1	1.2
0.8	vbul	19072	HILLTOP	230.0	1	1	1.2
0.8	vbus	19314	PEACOCK	230.0	1	1	1.2
0.8	vbul	19022	DAVIS	230.0	1	1	1.2
0.8	vbus	19042	PARKER	230.0	1	1	1.2

BUS FREQUENCY (1)

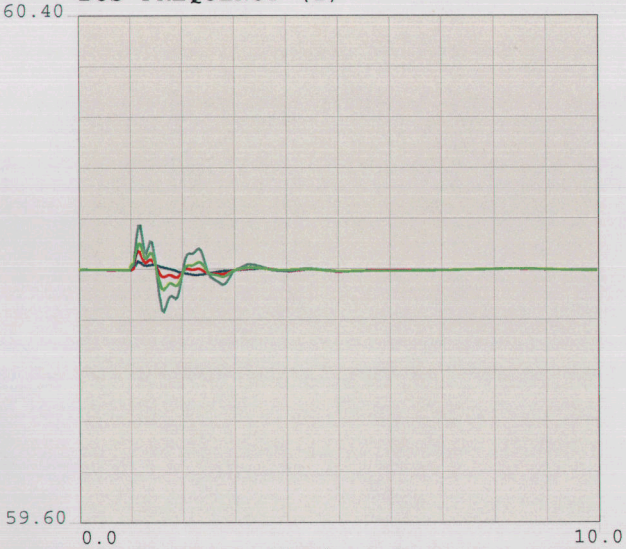

59.6	fbus	19038	MEAD	500.0	1	1	60.4
59.6	fbus	19037	MEAD	345.0	1	1	60.4
59.6	fbus	19315	PEACOCK	345.0	1	1	60.4
59.6	fbus	19053	LIBERTY	345.0	1	1	60.4

BUS FREQUENCY (2)

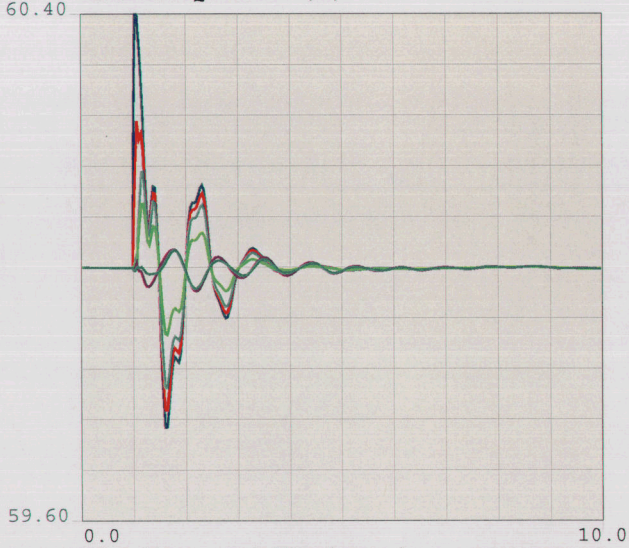

59.6	fbul	19310	GRIFFITH	230.0	1	1	60.4
59.6	fbul	19056	MCCONICO	230.0	1	1	60.4
59.6	fbul	19072	HILLTOP	230.0	1	1	60.4
59.6	fbus	19314	PEACOCK	230.0	1	1	60.4
59.6	fbul	19022	DAVIS	230.0	1	1	60.4
59.6	fbus	19042	PARKER	230.0	1	1	60.4

2008 HEAVY AUTUMN, NORTHERN ARIZONA ENERGY PROJECT, POST-PROJECT - UNS Load Increased
CASE: 08ha_pst_LD-rev1.sav
EOR=9300MW, Minimum WAPA-DSW Generation Modeled.
Mohave Off-Line.
Modeled Northern Arizona Energy Project - 180 MW Net

TERMINAL VOLTAGE

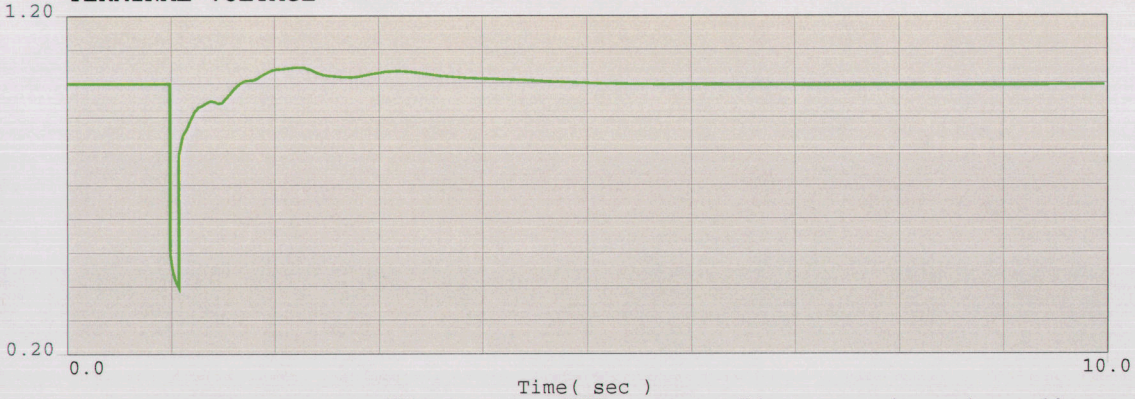

0.2	vt	19610	ARROYEP1	13.8	1	1	1.2
0.2	vt	19612	ARROYEP2	13.8	1	1	1.2
0.2	vt	19614	ARROYEP3	13.8	1	1	1.2
0.2	vt	19616	ARROYEP4	13.8	1	1	1.2

RELATIVE ROTOR ANGLE

0.0	ang	19610	ARROYEP1	13.8	1	1	150.0
0.0	ang	19612	ARROYEP2	13.8	1	1	150.0
0.0	ang	19614	ARROYEP3	13.8	1	1	150.0
0.0	ang	19616	ARROYEP4	13.8	1	1	150.0

SHAFT SPEED

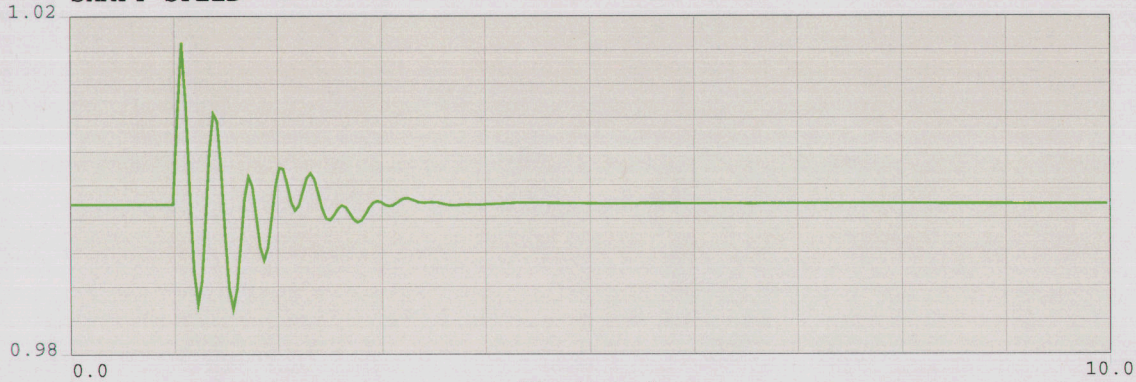

0.98	spd	19610	ARROYEP1	13.8	1	1	1.025
0.98	spd	19612	ARROYEP2	13.8	1	1	1.025
0.98	spd	19614	ARROYEP3	13.8	1	1	1.025
0.98	spd	19616	ARROYEP4	13.8	1	1	1.025

2008 HEAVY AUTUMN, NORTHERN ARIZONA ENERGY PROJECT, POST-PROJECT - UNS Load Increased
CASE: 08ha_pst_LD-rev1.sav
EOR=9300MW, Minimum WAPA-DSW Generation Modeled.
Mohave Off-Line.
Modeled Northern Arizona Energy Project - 180 MW Net

NORTHERN ARIZONA ENERGY PROJECT - TRANSIENT STABILITY PLOTS - PAGE 1

BUS VOLTAGE (1)

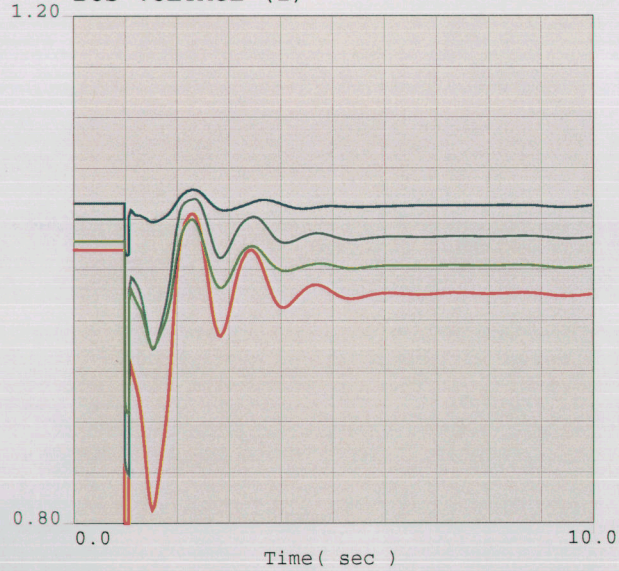

0.8	vbus	19038	MEAD	500.0	1	1	1.2
0.8	vbus	19315	PEACOCK	345.0	1	1	1.2
0.8	vbus	19053	LIBERTY	345.0	1	1	1.2
0.8	vbus	19037	MEAD	345.0	1	1	1.2

BUS VOLTAGE (2)

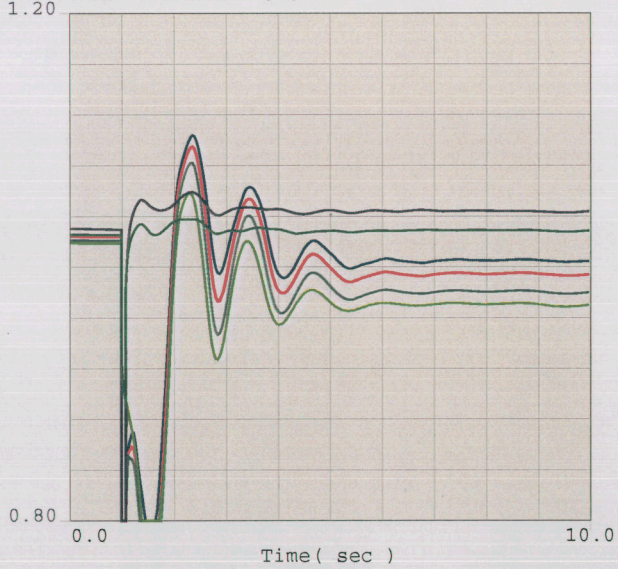

0.8	vbul	19310	GRIFFITH	230.0	1	1	1.2
0.8	vbul	19056	MCCONICO	230.0	1	1	1.2
0.8	vbul	19072	HILLTOP	230.0	1	1	1.2
0.8	vbus	19314	PEACOCK	230.0	1	1	1.2
0.8	vbul	19022	DAVIS	230.0	1	1	1.2
0.8	vbus	19042	PARKER	230.0	1	1	1.2

BUS FREQUENCY (1)

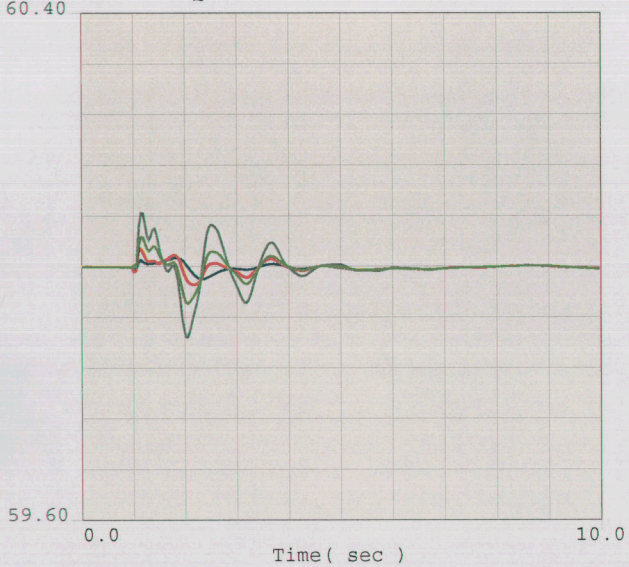

59.6	fbus	19038	MEAD	500.0	1	1	60.4
59.6	fbus	19037	MEAD	345.0	1	1	60.4
59.6	fbus	19315	PEACOCK	345.0	1	1	60.4
59.6	fbus	19053	LIBERTY	345.0	1	1	60.4

BUS FREQUENCY (2)

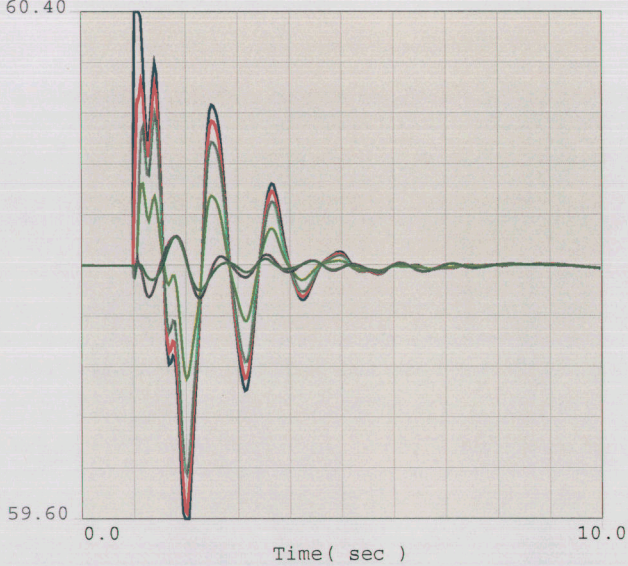

59.6	fbul	19310	GRIFFITH	230.0	1	1	60.4
59.6	fbul	19056	MCCONICO	230.0	1	1	60.4
59.6	fbul	19072	HILLTOP	230.0	1	1	60.4
59.6	fbus	19314	PEACOCK	230.0	1	1	60.4
59.6	fbul	19022	DAVIS	230.0	1	1	60.4
59.6	fbus	19042	PARKER	230.0	1	1	60.4

2008 HEAVY AUTUMN, NORTHERN ARIZONA ENERGY PROJECT, POST-PROJECT - Area Interchange
CASE: 08ha_pst_maxAI-rev1.sav
EOR=9300MW, Maximum WAPA-DSW Generation Modeled.
Mohave Off-line.
Modeled Northern Arizona Energy Project - 180 MW Net

TERMINAL VOLTAGE

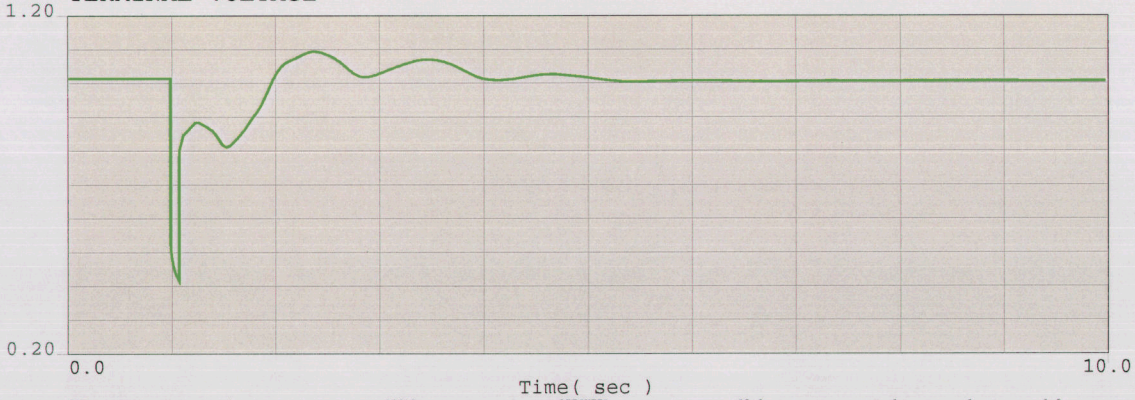

0.2	vt	19610	ARROYEP1	13.8	1	1	1.2
0.2	vt	19612	ARROYEP2	13.8	1	1	1.2
0.2	vt	19614	ARROYEP3	13.8	1	1	1.2
0.2	vt	19616	ARROYEP4	13.8	1	1	1.2

RELATIVE ROTOR ANGLE

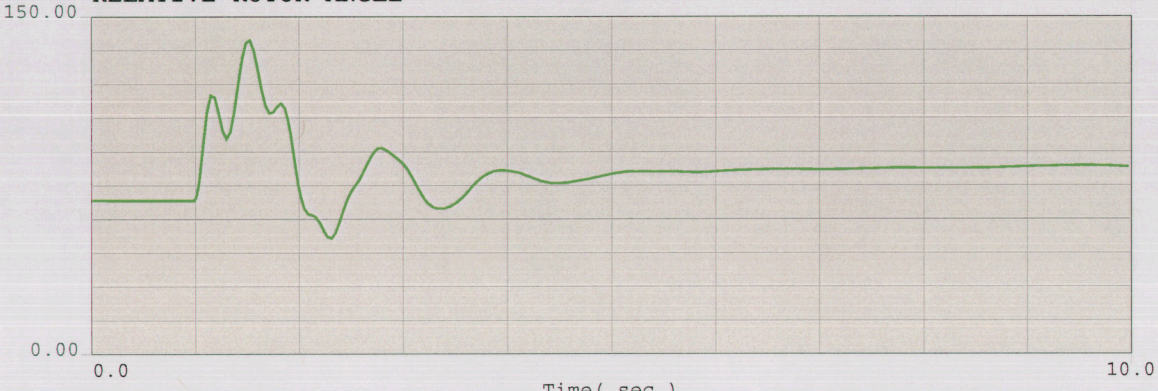

0.0	ang	19610	ARROYEP1	13.8	1	1	150.0
0.0	ang	19612	ARROYEP2	13.8	1	1	150.0
0.0	ang	19614	ARROYEP3	13.8	1	1	150.0
0.0	ang	19616	ARROYEP4	13.8	1	1	150.0

SHAFT SPEED

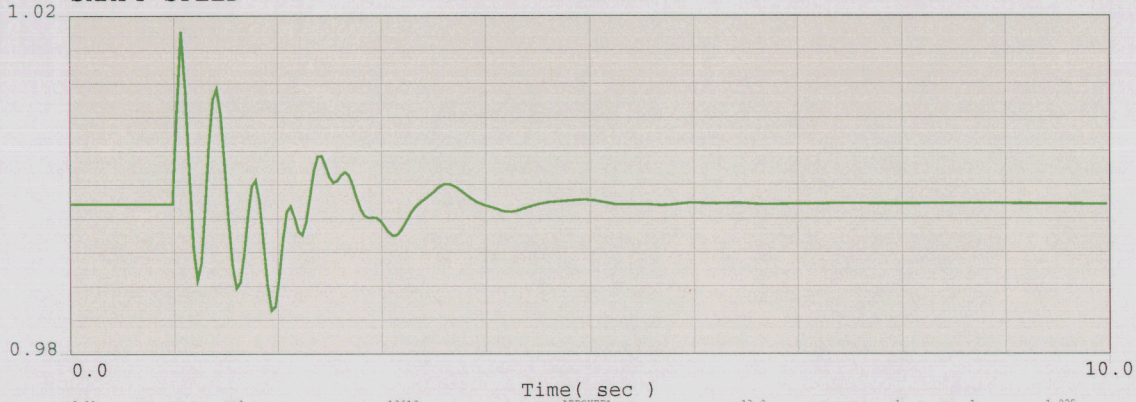

0.98	spd	19610	ARROYEP1	13.8	1	1	1.025
0.98	spd	19612	ARROYEP2	13.8	1	1	1.025
0.98	spd	19614	ARROYEP3	13.8	1	1	1.025
0.98	spd	19616	ARROYEP4	13.8	1	1	1.025

2008 HEAVY AUTUMN, NORTHERN ARIZONA ENERGY PROJECT, POST-PROJECT - Area Interchange
CASE: 08ha_pst_maxAI-rev1.sav
EOR=9300MW, Maximum WAPA-DSW Generation Modeled.
Mohave Off-line.
Modeled Northern Arizona Energy Project - 180 MW Net

NORTHERN ARIZONA ENERGY PROJECT - TRANSIENT STABILITY PLOTS - PAGE 1

BUS VOLTAGE (1)

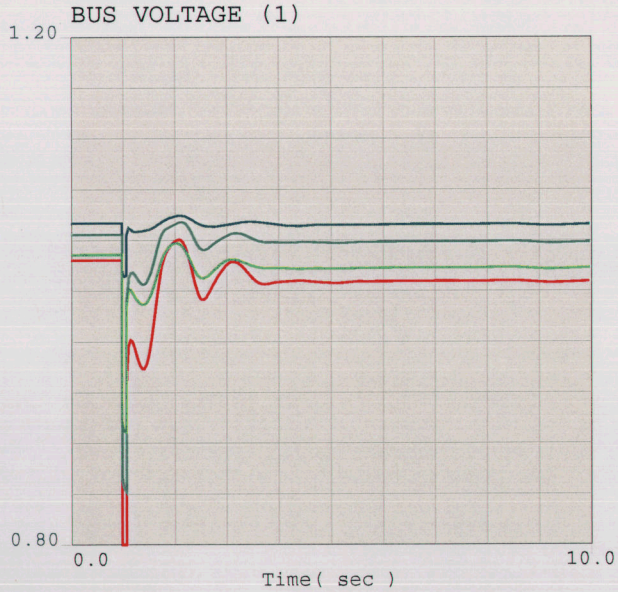

0.8	vbus	19038	MEAD	500.0	1	1	1.2
0.8	vbus	19315	PEACOCK	345.0	1	1	1.2
0.8	vbus	19053	LIBERTY	345.0	1	1	1.2
0.8	vbus	19037	MEAD	345.0	1	1	1.2

BUS VOLTAGE (2)

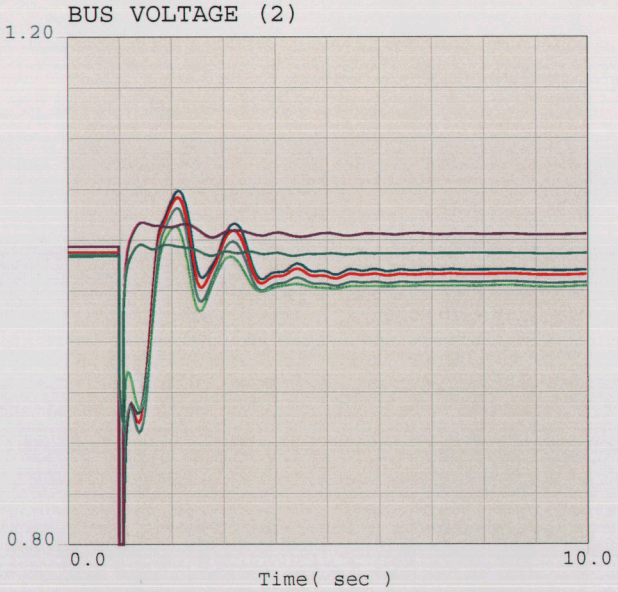

0.8	vbul	19310	GRIFFITH	230.0	1	1	1.2
0.8	vbul	19056	MCCONICO	230.0	1	1	1.2
0.8	vbul	19072	HILLTOP	230.0	1	1	1.2
0.8	vbus	19314	PEACOCK	230.0	1	1	1.2
0.8	vbul	19022	DAVIS	230.0	1	1	1.2
0.8	vbus	19042	PARKER	230.0	1	1	1.2

BUS FREQUENCY (1)

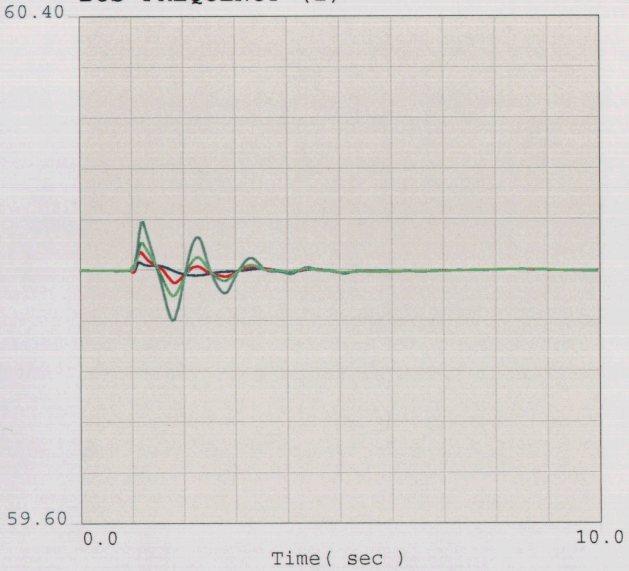

59.6	fbus	19038	MEAD	500.0	1	1	60.4
59.6	fbus	19037	MEAD	345.0	1	1	60.4
59.6	fbus	19315	PEACOCK	345.0	1	1	60.4
59.6	fbus	19053	LIBERTY	345.0	1	1	60.4

BUS FREQUENCY (2)

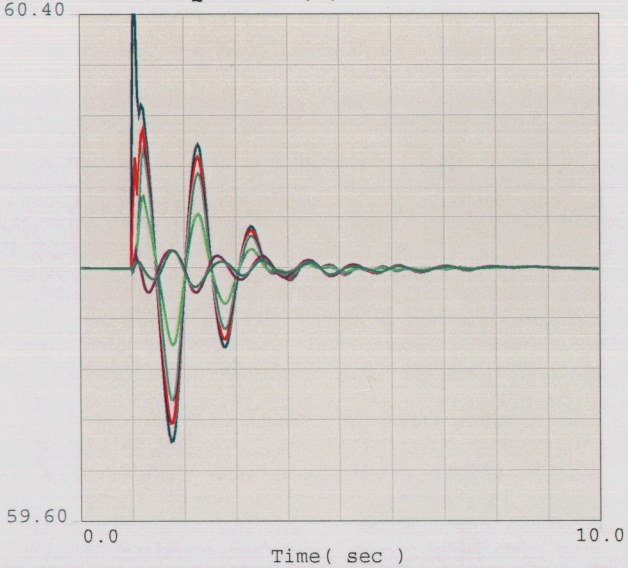

59.6	fbul	19310	GRIFFITH	230.0	1	1	60.4
59.6	fbul	19056	MCCONICO	230.0	1	1	60.4
59.6	fbul	19072	HILLTOP	230.0	1	1	60.4
59.6	fbus	19314	PEACOCK	230.0	1	1	60.4
59.6	fbul	19022	DAVIS	230.0	1	1	60.4
59.6	fbus	19042	PARKER	230.0	1	1	60.4

2008 HEAVY AUTUMN, NORTHERN ARIZONA ENERGY PROJECT, POST-PROJECT - Area Interchange
CASE: 08ha_pst_maxAI-rev1.sav
EOR=9300MW, Maximum WAPA-DSW Generation Modeled.
Mohave Off-line.
Modeled Northern Arizona Energy Project - 180 MW Net

TERMINAL VOLTAGE

RELATIVE ROTOR ANGLE

SHAFT SPEED

NORTHERN ARIZONA ENERGY PROJECT - TRANSIENT STABILITY PLOTS - PAGE 1

BUS VOLTAGE (1)

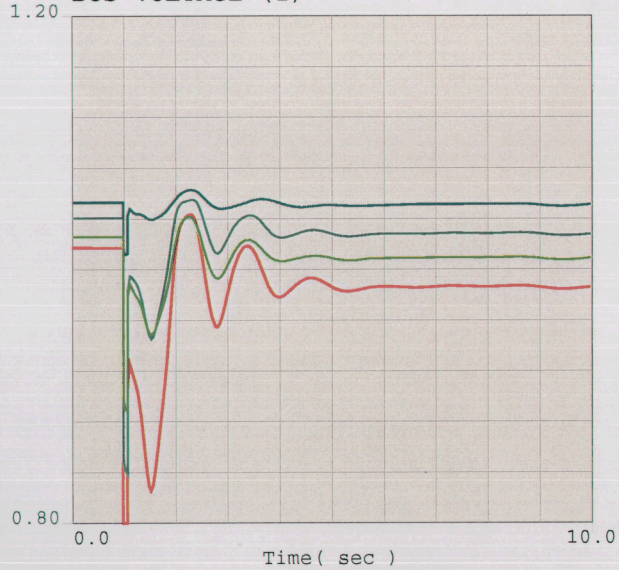

0.8	vbus	19038	MEAD	500.0	1	1	1.2
0.8	vbus	19315	PEACOCK	345.0	1	1	1.2
0.8	vbus	19053	LIBERTY	345.0	1	1	1.2
0.8	vbus	19037	MEAD	345.0	1	1	1.2

BUS VOLTAGE (2)

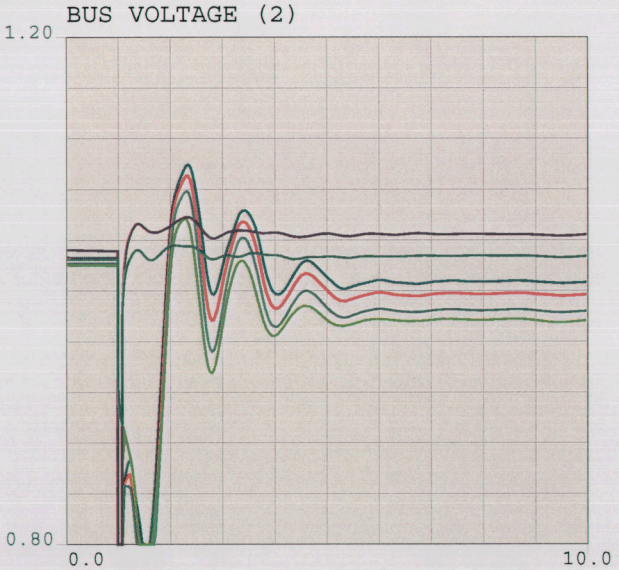

0.8	vbul	19310	GRIFFITH	230.0	1	1	1.2
0.8	vbul	19056	MCCONICO	230.0	1	1	1.2
0.8	vbul	19072	HILLTOP	230.0	1	1	1.2
0.8	vbus	19314	PEACOCK	230.0	1	1	1.2
0.8	vbul	19022	DAVIS	230.0	1	1	1.2
0.8	vbus	19042	PARKER	230.0	1	1	1.2

BUS FREQUENCY (1)

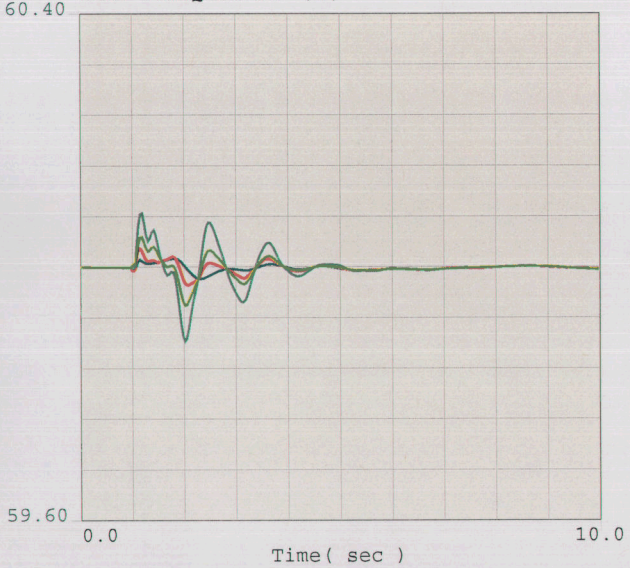

59.6	fbus	19038	MEAD	500.0	1	1	60.4
59.6	fbus	19037	MEAD	345.0	1	1	60.4
59.6	fbus	19315	PEACOCK	345.0	1	1	60.4
59.6	fbus	19053	LIBERTY	345.0	1	1	60.4

BUS FREQUENCY (2)

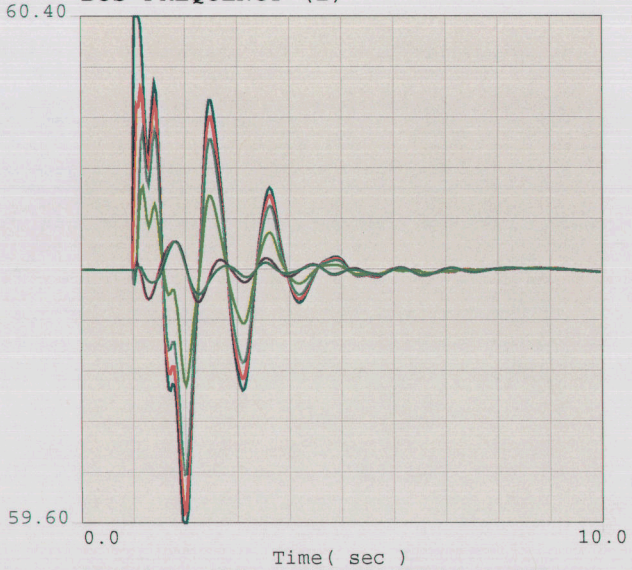

59.6	fbul	19310	GRIFFITH	230.0	1	1	60.4
59.6	fbul	19056	MCCONICO	230.0	1	1	60.4
59.6	fbul	19072	HILLTOP	230.0	1	1	60.4
59.6	fbus	19314	PEACOCK	230.0	1	1	60.4
59.6	fbul	19022	DAVIS	230.0	1	1	60.4
59.6	fbus	19042	PARKER	230.0	1	1	60.4

2008 HEAVY AUTUMN, NORTHERN ARIZONA ENERGY PROJECT, POST-PROJECT - UNS Load Increased
CASE: 08ha_pst_maxLD-rev1.sav
EOR=9300MW, Maximum WAPA-DSW Generation Modeled.
Mohave Off-line.
Modeled Northern Arizona Energy Project - 180 MW Net

TERMINAL VOLTAGE

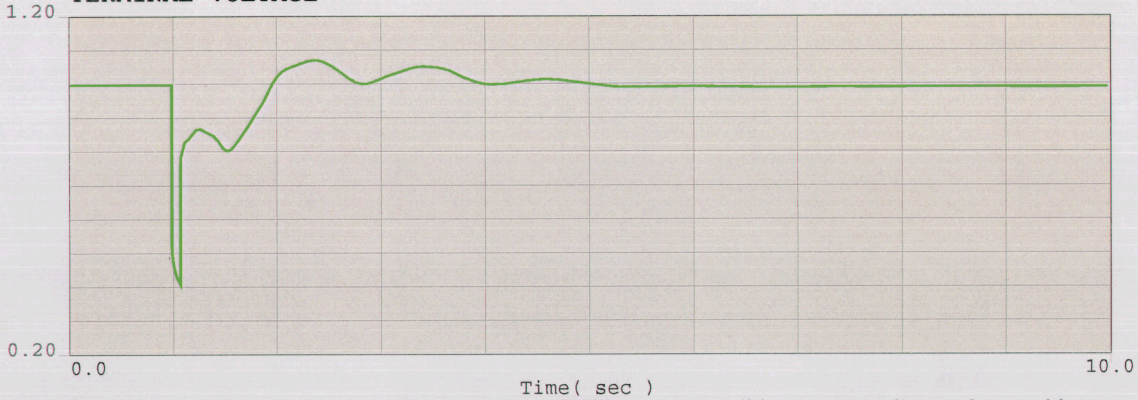

0.2	vt	19610	ARROYEP1	13.8	1	1	1.2
0.2	vt	19612	ARROYEP2	13.8	1	1	1.2
0.2	vt	19614	ARROYEP3	13.8	1	1	1.2
0.2	vt	19616	ARROYEP4	13.8	1	1	1.2

RELATIVE ROTOR ANGLE

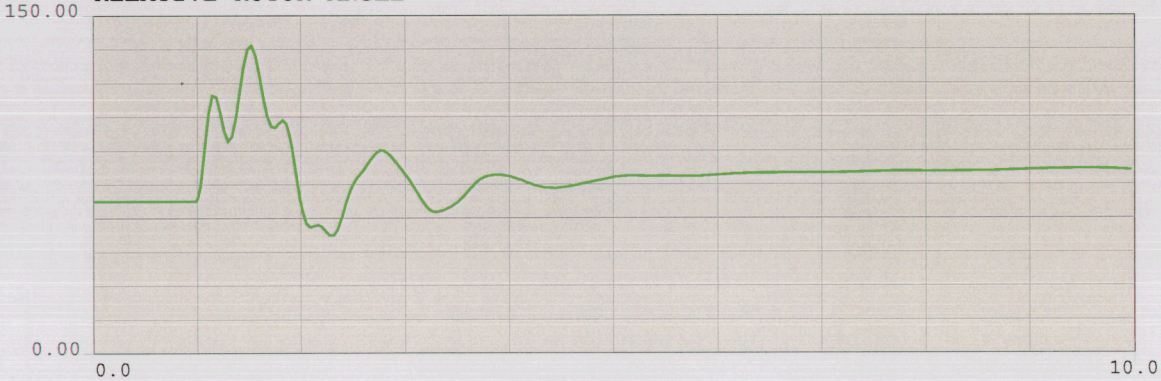

0.0	ang	19610	ARROYEP1	13.8	1	1	150.0
0.0	ang	19612	ARROYEP2	13.8	1	1	150.0
0.0	ang	19614	ARROYEP3	13.8	1	1	150.0
0.0	ang	19616	ARROYEP4	13.8	1	1	150.0

SHAFT SPEED

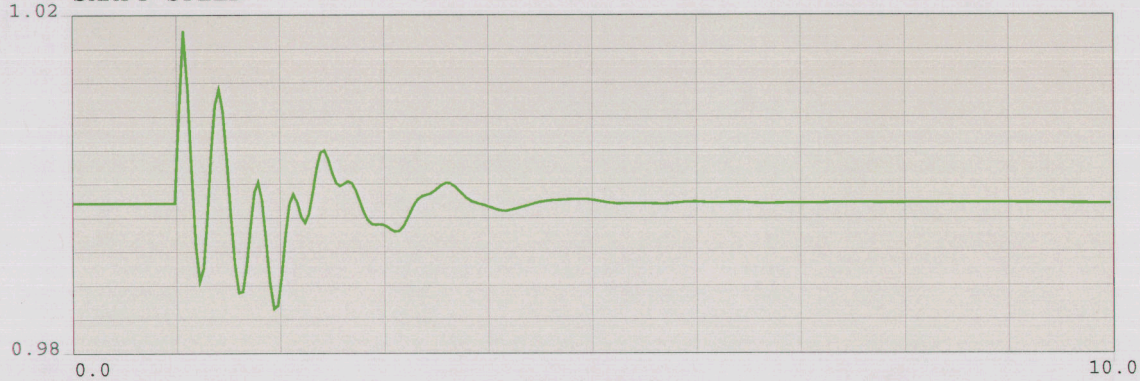

0.98	spd	19610	ARROYEP1	13.8	1	1	1.025
0.98	spd	19612	ARROYEP2	13.8	1	1	1.025
0.98	spd	19614	ARROYEP3	13.8	1	1	1.025
0.98	spd	19616	ARROYEP4	13.8	1	1	1.025

2008 HEAVY AUTUMN, NORTHERN ARIZONA ENERGY PROJECT, POST-PROJECT - UNS Load Increased
CASE: 08ha_pst_maxLD-rev1.sav
EOR=9300MW, Maximum WAPA-DSW Generation Modeled.
Mohave Off-line.
Modeled Northern Arizona Energy Project - 180 MW Net

NORTHERN ARIZONA ENERGY PROJECT - TRANSIENT STABILITY PLOTS - PAGE 1

BUS VOLTAGE (1)

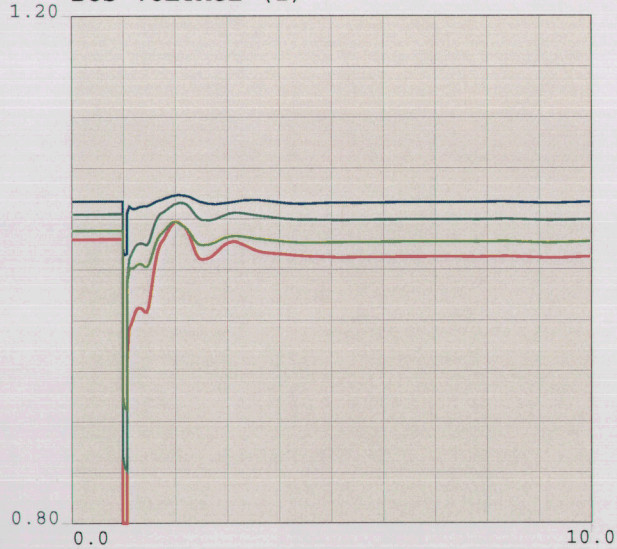

0.8	vbus	19038	MEAD	500.0	1	1	1.2
0.8	vbus	19315	PEACOCK	345.0	1	1	1.2
0.8	vbus	19053	LIBERTY	345.0	1	1	1.2
0.8	vbus	19037	MEAD	345.0	1	1	1.2

BUS VOLTAGE (2)

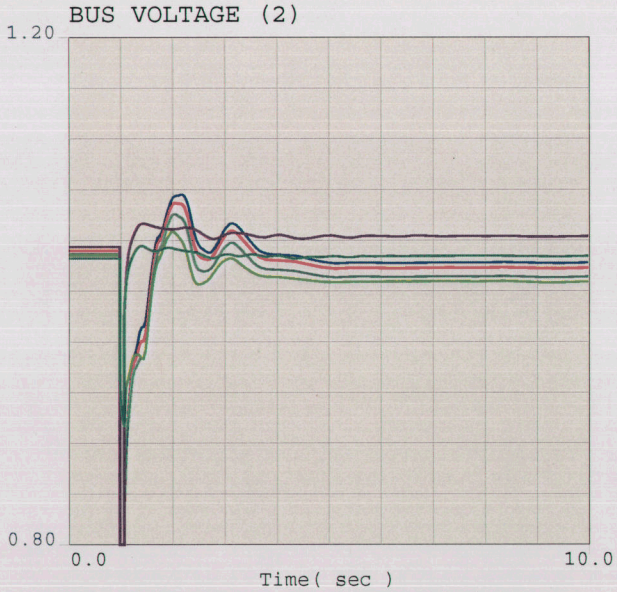

0.8	vbul	19310	GRIFFITH	230.0	1	1	1.2
0.8	vbul	19056	MCCONICO	230.0	1	1	1.2
0.8	vbul	19072	HILLTOP	230.0	1	1	1.2
0.8	vbus	19314	PEACOCK	230.0	1	1	1.2
0.8	vbul	19022	DAVIS	230.0	1	1	1.2
0.8	vbus	19042	PARKER	230.0	1	1	1.2

BUS FREQUENCY (1)

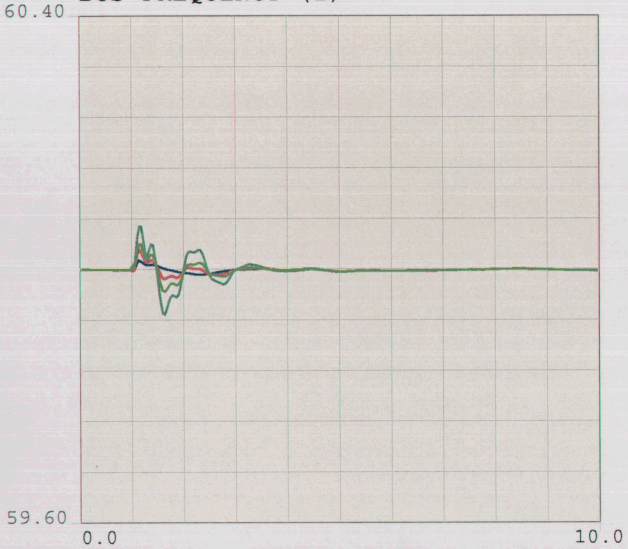

59.6	fbus	19038	MEAD	500.0	1	1	60.4
59.6	fbus	19037	MEAD	345.0	1	1	60.4
59.6	fbus	19315	PEACOCK	345.0	1	1	60.4
59.6	fbus	19053	LIBERTY	345.0	1	1	60.4

BUS FREQUENCY (2)

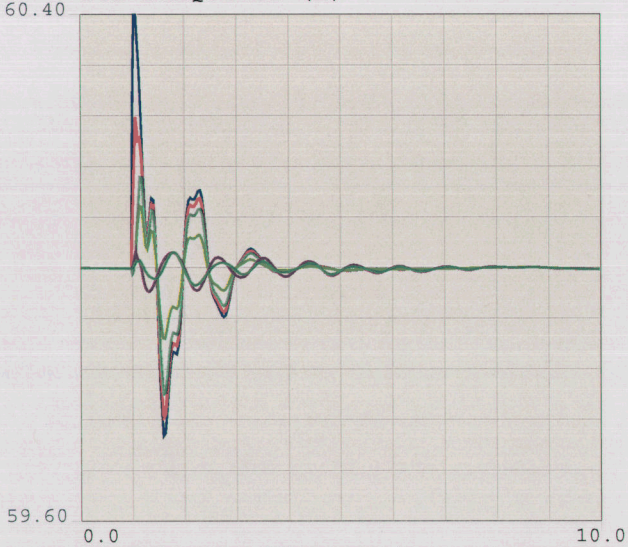

59.6	fbul	19310	GRIFFITH	230.0	1	1	60.4
59.6	fbul	19056	MCCONICO	230.0	1	1	60.4
59.6	fbul	19072	HILLTOP	230.0	1	1	60.4
59.6	fbus	19314	PEACOCK	230.0	1	1	60.4
59.6	fbul	19022	DAVIS	230.0	1	1	60.4
59.6	fbus	19042	PARKER	230.0	1	1	60.4

2008 HEAVY AUTUMN, NORTHERN ARIZONA ENERGY PROJECT, POST-PROJECT - UNS Load Increased
CASE: 08ha_pst_maxLD-rev1.sav
EOR=9300MW, Maximum WAPA-DSW Generation Modeled.
Mohave Off-line.
Modeled Northern Arizona Energy Project - 180 MW Net

TERMINAL VOLTAGE

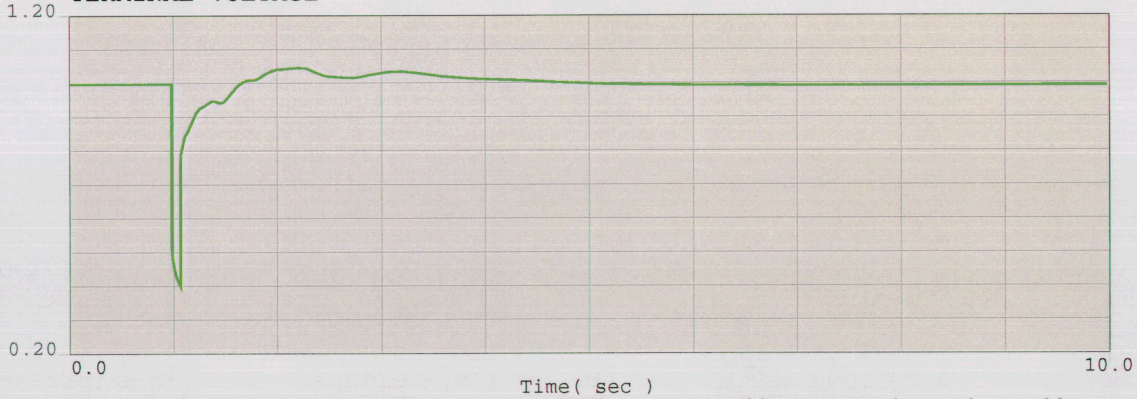

0.2	vt	19610	ARROYEP1	13.8	1	1	1.2
0.2	vt	19612	ARROYEP2	13.8	1	1	1.2
0.2	vt	19614	ARROYEP3	13.8	1	1	1.2
0.2	vt	19616	ARROYEP4	13.8	1	1	1.2

RELATIVE ROTOR ANGLE

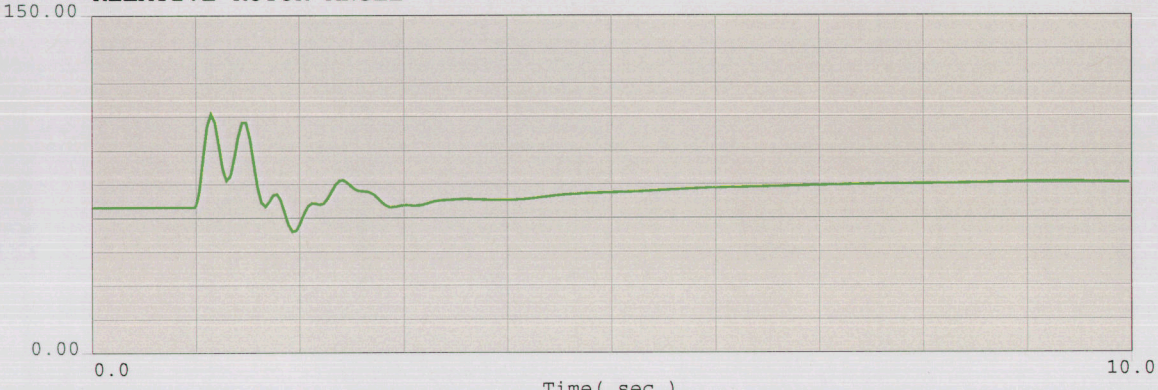

0.0	ang	19610	ARROYEP1	13.8	1	1	150.0
0.0	ang	19612	ARROYEP2	13.8	1	1	150.0
0.0	ang	19614	ARROYEP3	13.8	1	1	150.0
0.0	ang	19616	ARROYEP4	13.8	1	1	150.0

SHAFT SPEED

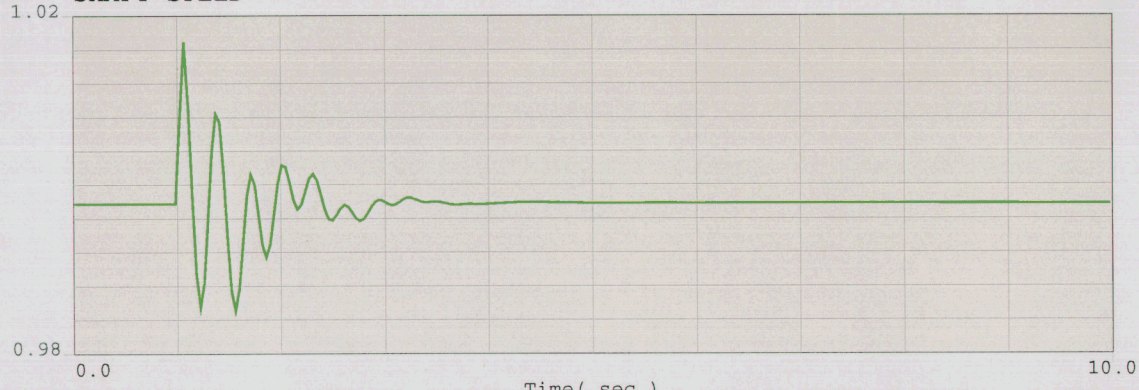

0.98	spd	19610	ARROYEP1	13.8	1	1	1.025
0.98	spd	19612	ARROYEP2	13.8	1	1	1.025
0.98	spd	19614	ARROYEP3	13.8	1	1	1.025
0.98	spd	19616	ARROYEP4	13.8	1	1	1.025

2008 HEAVY AUTUMN, NORTHERN ARIZONA ENERGY PROJECT, POST-PROJECT - UNS Load Increased
CASE: 08ha_pst_maxLD-rev1.sav
EOR=9300MW, Maximum WAPA-DSW Generation Modeled.
Mohave Off-line.
Modeled Northern Arizona Energy Project - 180 MW Net

2008 HEAVY AUTUMN – LIBERTY PHASE-SHIFT TRANSFORMER BY-PASSED

NORTHERN ARIZONA ENERGY PROJECT - TRANSIENT STABILITY PLOTS - PAGE 1

BUS VOLTAGE (1)

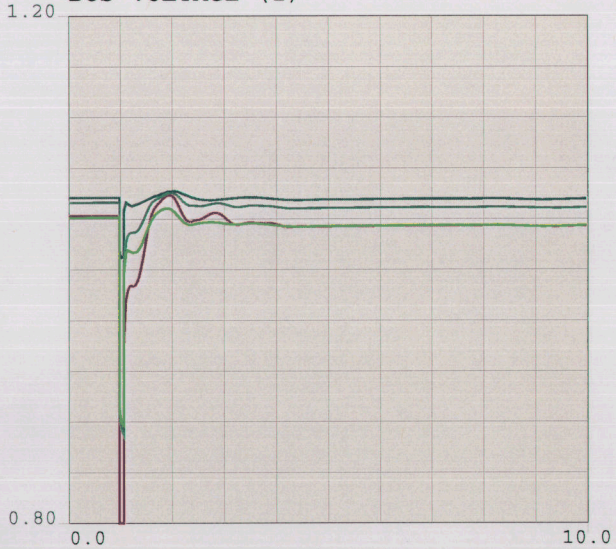

0.8	vbus	19038	MEAD	500.0	1	1	1.2
0.8	vbus	19315	PEACOCK	345.0	1	1	1.2
0.8	vbus	19053	LIBERTY	345.0	1	1	1.2
0.8	vbus	19037	MEAD	345.0	1	1	1.2

BUS VOLTAGE (2)

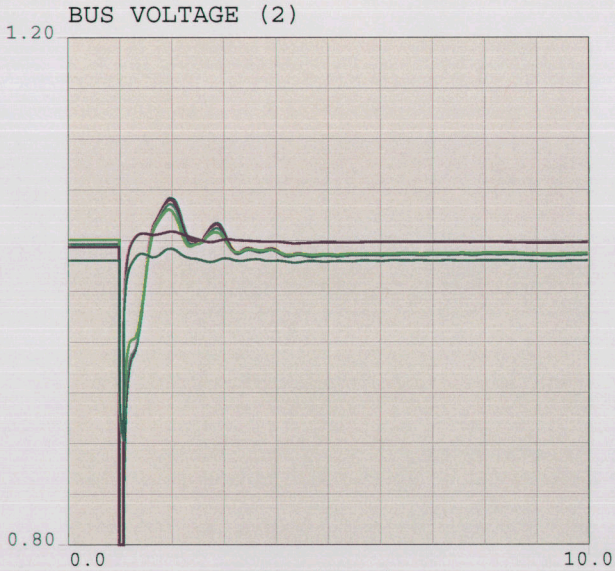

0.8	vbul	19310	GRIFFITH	230.0	1	1	1.2
0.8	vbul	19056	MCCONICO	230.0	1	1	1.2
0.8	vbul	19072	HILLTOP	230.0	1	1	1.2
0.8	vbus	19314	PEACOCK	230.0	1	1	1.2
0.8	vbul	19022	DAVIS	230.0	1	1	1.2
0.8	vbus	19042	PARKER	230.0	1	1	1.2

BUS FREQUENCY (1)

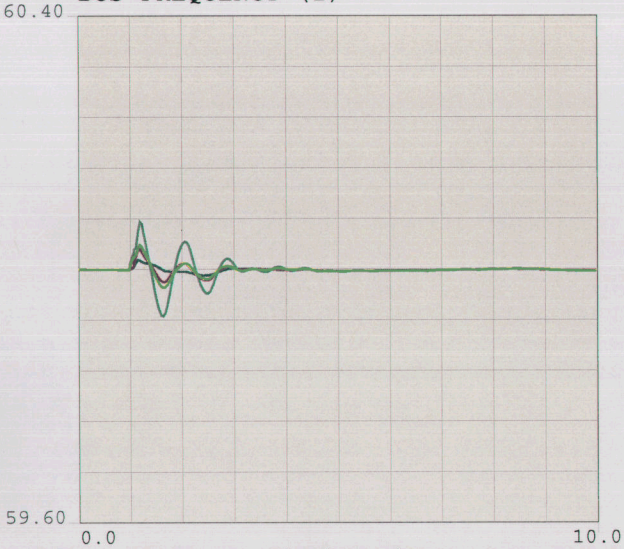

59.6	fbus	19038	MEAD	500.0	1	1	60.4
59.6	fbus	19037	MEAD	345.0	1	1	60.4
59.6	fbus	19315	PEACOCK	345.0	1	1	60.4
59.6	fbus	19053	LIBERTY	345.0	1	1	60.4

BUS FREQUENCY (2)

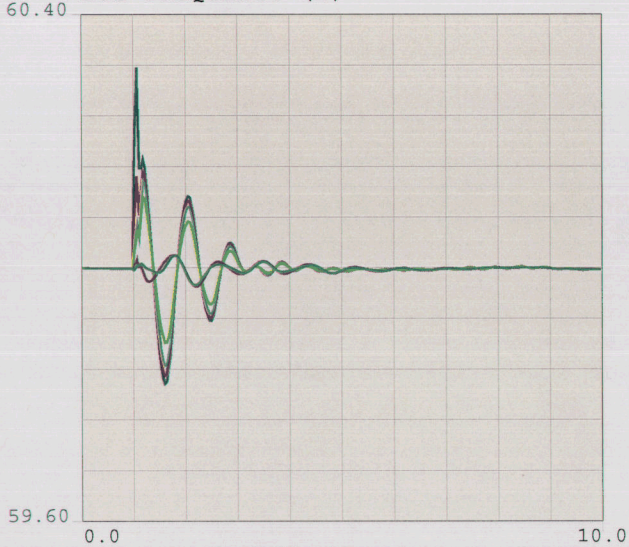

59.6	fbul	19310	GRIFFITH	230.0	1	1	60.4
59.6	fbul	19056	MCCONICO	230.0	1	1	60.4
59.6	fbul	19072	HILLTOP	230.0	1	1	60.4
59.6	fbus	19314	PEACOCK	230.0	1	1	60.4
59.6	fbul	19022	DAVIS	230.0	1	1	60.4
59.6	fbus	19042	PARKER	230.0	1	1	60.4

2008 HEAVY AUTUMN, NORTHERN ARIZONA ENERGY PROJECT, PRE-PROJECT
CASE: 08ha_pre-rev1.sav
EOR=9300MW, Min WAPA-DSW Generation Modeled.
Mohave Off-Line.
Liberty Phase-Shifter Bypassed.

NORTHERN ARIZONA ENERGY PROJECT - TRANSIENT STABILITY PLOTS - PAGE 1

BUS VOLTAGE (1)

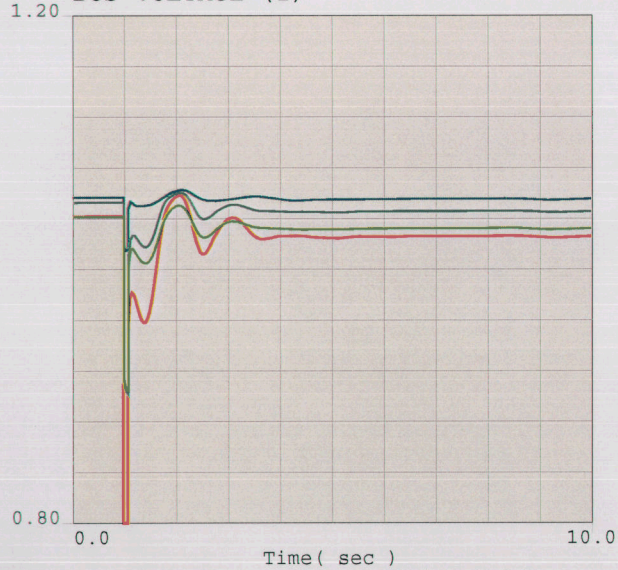

0.8	vbus	19038	MEAD	500.0	1	1	1.2
0.8	vbus	19315	PEACOCK	345.0	1	1	1.2
0.8	vbus	19053	LIBERTY	345.0	1	1	1.2
0.8	vbus	19037	MEAD	345.0	1	1	1.2

BUS VOLTAGE (2)

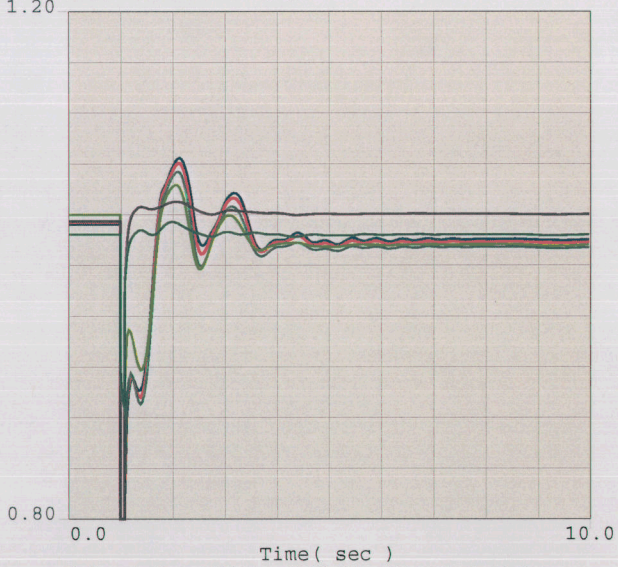

0.8	vbul	19310	GRIFFITH	230.0	1	1	1.2
0.8	vbul	19056	MCCONICO	230.0	1	1	1.2
0.8	vbul	19072	HILLTOP	230.0	1	1	1.2
0.8	vbus	19314	PEACOCK	230.0	1	1	1.2
0.8	vbul	19022	DAVIS	230.0	1	1	1.2
0.8	vbus	19042	PARKER	230.0	1	1	1.2

BUS FREQUENCY (1)

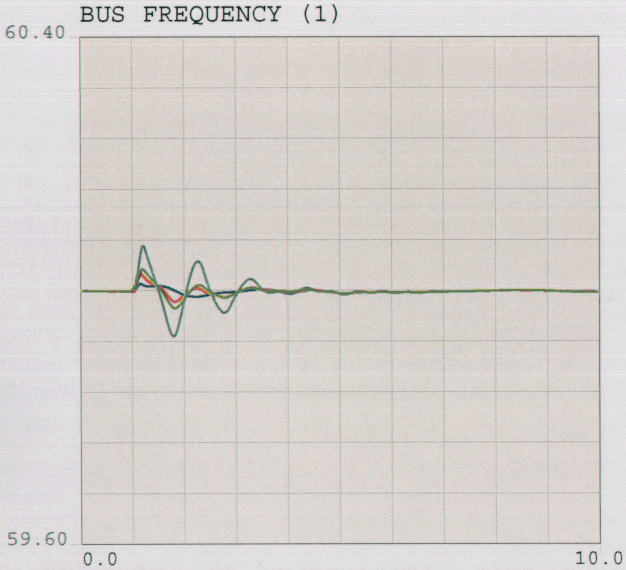

59.6	fbus	19038	MEAD	500.0	1	1	60.4
59.6	fbus	19037	MEAD	345.0	1	1	60.4
59.6	fbus	19315	PEACOCK	345.0	1	1	60.4
59.6	fbus	19053	LIBERTY	345.0	1	1	60.4

BUS FREQUENCY (2)

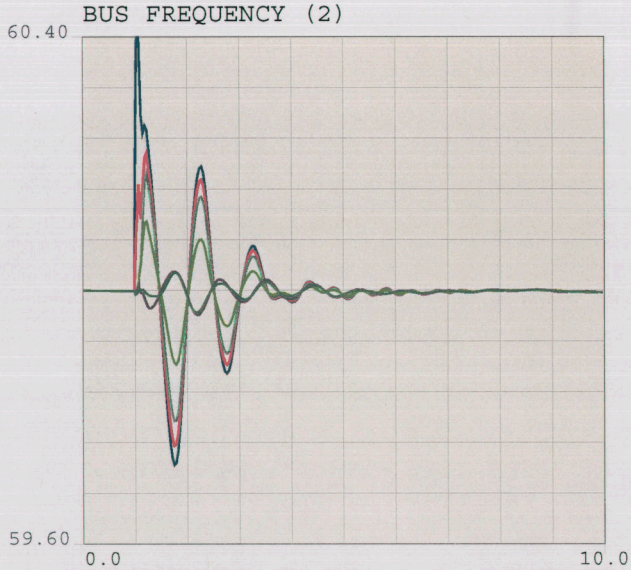

59.6	fbul	19310	GRIFFITH	230.0	1	1	60.4
59.6	fbul	19056	MCCONICO	230.0	1	1	60.4
59.6	fbul	19072	HILLTOP	230.0	1	1	60.4
59.6	fbus	19314	PEACOCK	230.0	1	1	60.4
59.6	fbul	19022	DAVIS	230.0	1	1	60.4
59.6	fbus	19042	PARKER	230.0	1	1	60.4

2008 HEAVY AUTUMN, NORTHERN ARIZONA ENERGY PROJECT, PRE-PROJECT
CASE: 08ha_pre-rev1.sav
EOR=9300MW, Min WAPA-DSW Generation Modeled.
Mohave Off-Line.
Liberty Phase-Shifter Bypassed.

NORTHERN ARIZONA ENERGY PROJECT - TRANSIENT STABILITY PLOTS - PAGE 1

BUS VOLTAGE (1)

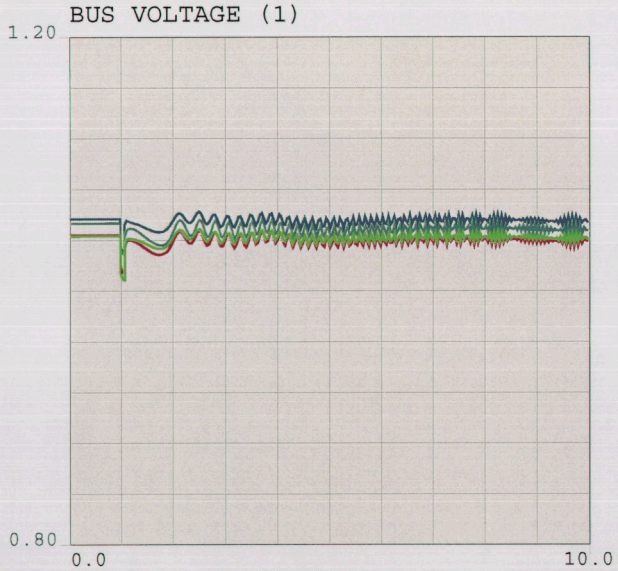

0.8	vbus	19038	MEAD	500.0	1	1	1.2
0.8	vbus	19315	PEACOCK	345.0	1	1	1.2
0.8	vbus	19053	LIBERTY	345.0	1	1	1.2
0.8	vbus	19037	MEAD	345.0	1	1	1.2

BUS VOLTAGE (2)

0.8	vbul	19310	GRIFFITH	230.0	1	1	1.2
0.8	vbul	19056	MCCONICO	230.0	1	1	1.2
0.8	vbul	19072	HILLTOP	230.0	1	1	1.2
0.8	vbus	19314	PEACOCK	230.0	1	1	1.2
0.8	vbul	19022	DAVIS	230.0	1	1	1.2
0.8	vbus	19042	PARKER	230.0	1	1	1.2

BUS FREQUENCY (1)

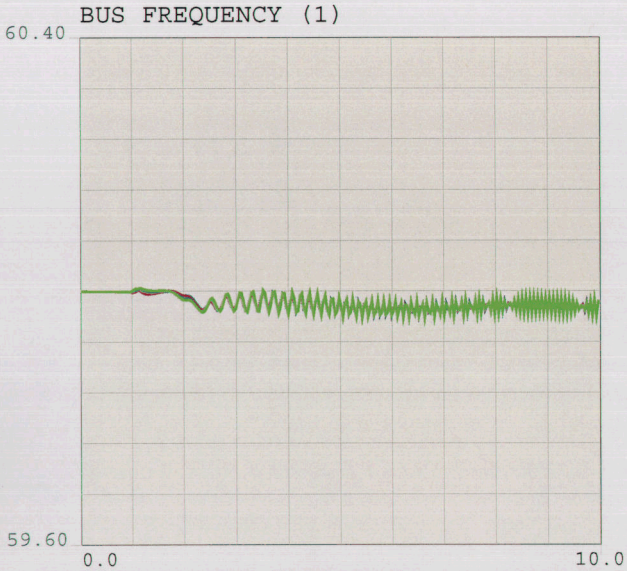

59.6	fbus	19038	MEAD	500.0	1	1	60.4
59.6	fbus	19037	MEAD	345.0	1	1	60.4
59.6	fbus	19315	PEACOCK	345.0	1	1	60.4
59.6	fbus	19053	LIBERTY	345.0	1	1	60.4

BUS FREQUENCY (2)

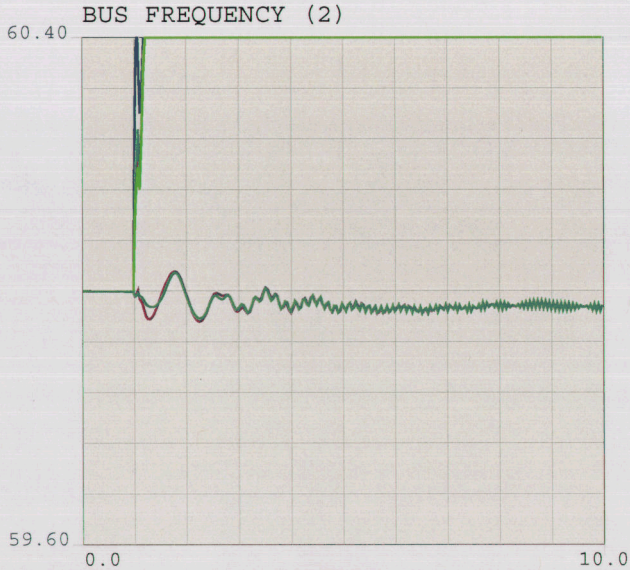

59.6	fbul	19310	GRIFFITH	230.0	1	1	60.4
59.6	fbul	19056	MCCONICO	230.0	1	1	60.4
59.6	fbul	19072	HILLTOP	230.0	1	1	60.4
59.6	fbus	19314	PEACOCK	230.0	1	1	60.4
59.6	fbul	19022	DAVIS	230.0	1	1	60.4
59.6	fbus	19042	PARKER	230.0	1	1	60.4

2008 HEAVY AUTUMN, NORTHERN ARIZONA ENERGY PROJECT, PRE-PROJECT
CASE: 08ha_pre-rev1.sav
EOR=9300MW, Min WAPA-DSW Generation Modeled.
Mohave Off-Line.
Liberty Phase-Shifter Bypassed.

08ha_pre-libbp-PKTran_McConnico-Davis-230-slo.chf

c:\upslf16\mypslf

Thu Jul 19 16:12:25 2007

NORTHERN ARIZONA ENERGY PROJECT - TRANSIENT STABILITY PLOTS - PAGE 1

BUS VOLTAGE (1)

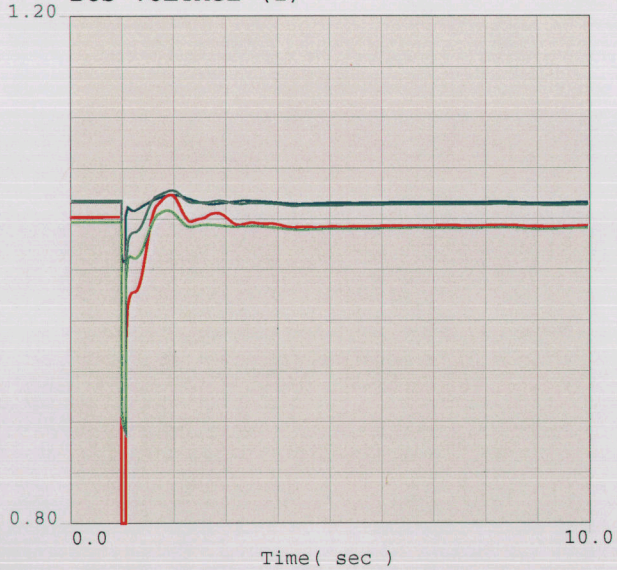

0.8	vbus	19038	MEAD	500.0	1	1	1.2
0.8	vbus	19315	PEACOCK	345.0	1	1	1.2
0.8	vbus	19053	LIBERTY	345.0	1	1	1.2
0.8	vbus	19037	MEAD	345.0	1	1	1.2

BUS VOLTAGE (2)

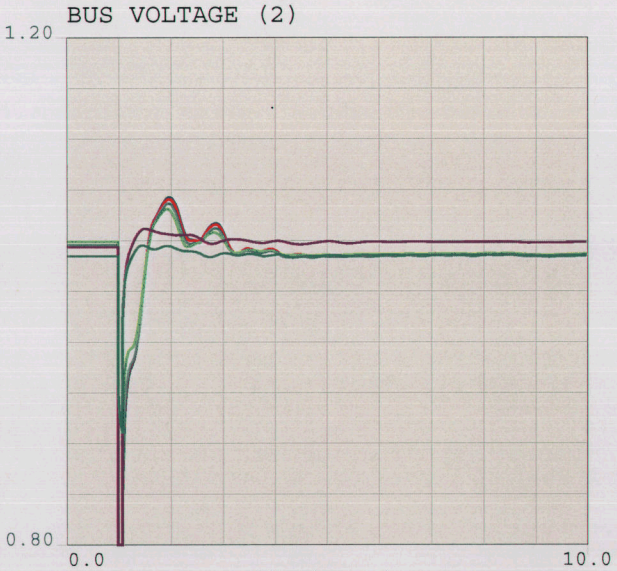

0.8	vbul	19310	GRIFFITH	230.0	1	1	1.2
0.8	vbul	19056	MCCONICO	230.0	1	1	1.2
0.8	vbul	19072	HILLTOP	230.0	1	1	1.2
0.8	vbus	19314	PEACOCK	230.0	1	1	1.2
0.8	vbul	19022	DAVIS	230.0	1	1	1.2
0.8	vbus	19042	PARKER	230.0	1	1	1.2

BUS FREQUENCY (1)

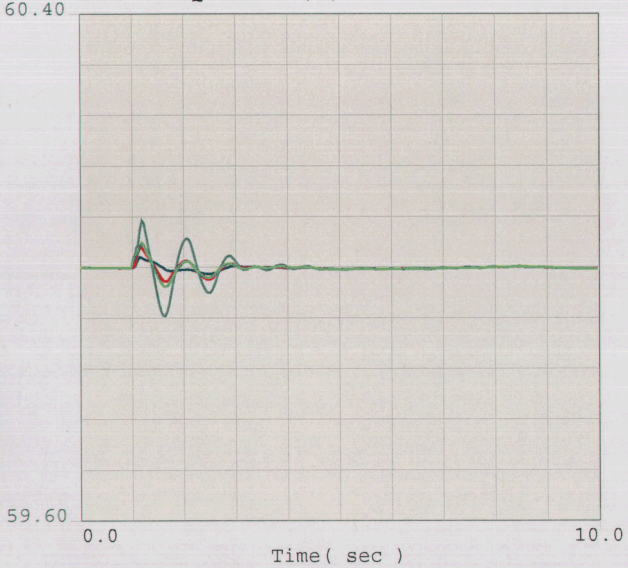

59.6	fbus	19038	MEAD	500.0	1	1	60.4
59.6	fbus	19037	MEAD	345.0	1	1	60.4
59.6	fbus	19315	PEACOCK	345.0	1	1	60.4
59.6	fbus	19053	LIBERTY	345.0	1	1	60.4

BUS FREQUENCY (2)

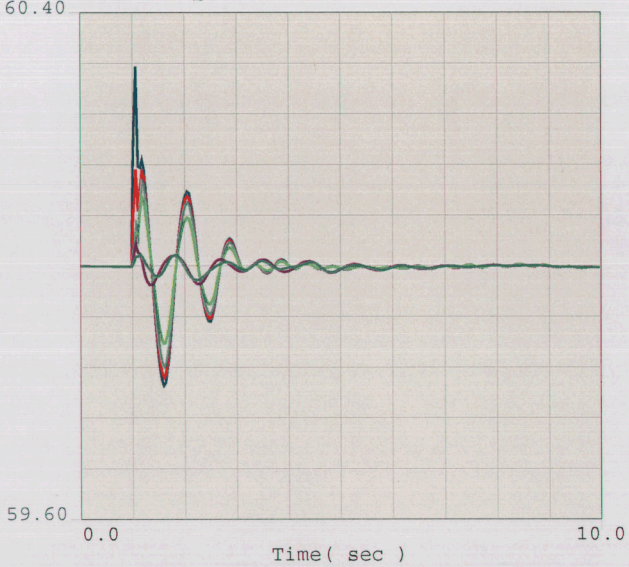

59.6	fbul	19310	GRIFFITH	230.0	1	1	60.4
59.6	fbul	19056	MCCONICO	230.0	1	1	60.4
59.6	fbul	19072	HILLTOP	230.0	1	1	60.4
59.6	fbus	19314	PEACOCK	230.0	1	1	60.4
59.6	fbul	19022	DAVIS	230.0	1	1	60.4
59.6	fbus	19042	PARKER	230.0	1	1	60.4

2008 HEAVY AUTUMN, NORTHERN ARIZONA ENERGY PROJECT, PRE-PROJECT
CASE: 08ha_pre_max-LibBP-rev1.sav
EOR=9300MW, Maximum WAPA-DSW Generation Modeled.
Mohave Off-line, Liberty Phase-Shift Transformer By-Passed.

NORTHERN ARIZONA ENERGY PROJECT - TRANSIENT STABILITY PLOTS - PAGE 1

BUS VOLTAGE (1)

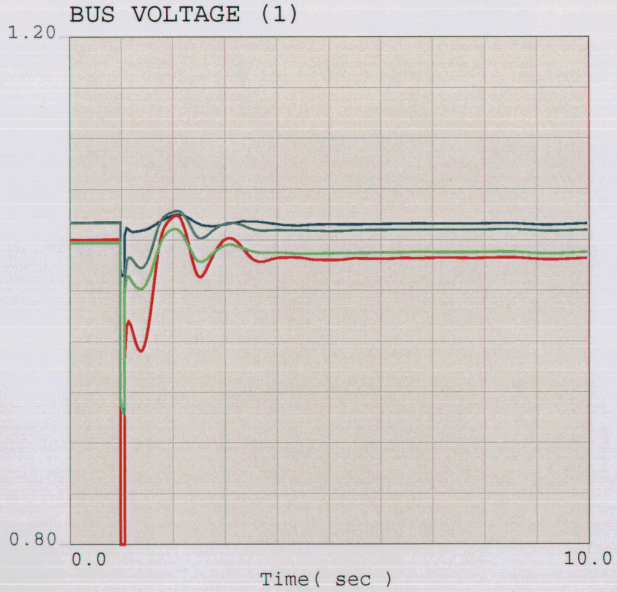

0.8	vbus	19038	MEAD	500.0	1	1	1.2
0.8	vbus	19315	PEACOCK	345.0	1	1	1.2
0.8	vbus	19053	LIBERTY	345.0	1	1	1.2
0.8	vbus	19037	MEAD	345.0	1	1	1.2

BUS VOLTAGE (2)

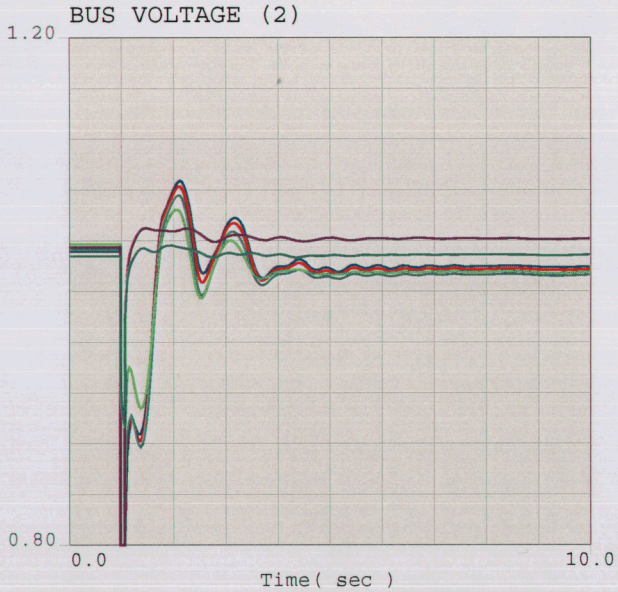

0.8	vbul	19310	GRIFFITH	230.0	1	1	1.2
0.8	vbul	19056	MCCONICO	230.0	1	1	1.2
0.8	vbul	19072	HILLTOP	230.0	1	1	1.2
0.8	vbus	19314	PEACOCK	230.0	1	1	1.2
0.8	vbul	19022	DAVIS	230.0	1	1	1.2
0.8	vbus	19042	PARKER	230.0	1	1	1.2

BUS FREQUENCY (1)

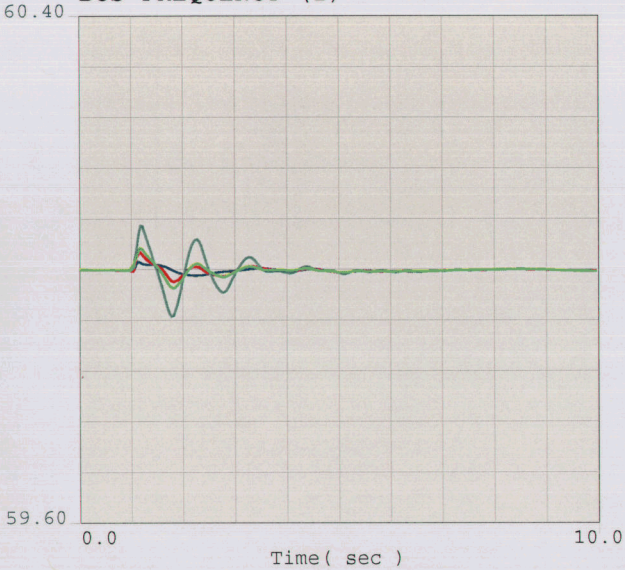

59.6	fbus	19038	MEAD	500.0	1	1	60.4
59.6	fbus	19037	MEAD	345.0	1	1	60.4
59.6	fbus	19315	PEACOCK	345.0	1	1	60.4
59.6	fbus	19053	LIBERTY	345.0	1	1	60.4

BUS FREQUENCY (2)

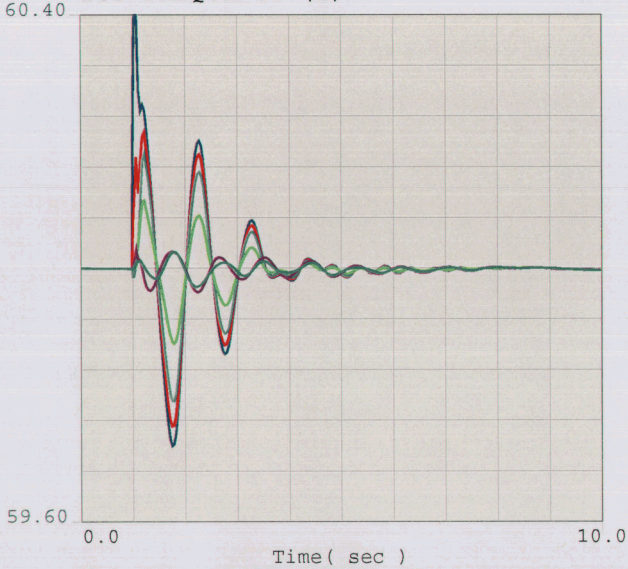

59.6	fbul	19310	GRIFFITH	230.0	1	1	60.4
59.6	fbul	19056	MCCONICO	230.0	1	1	60.4
59.6	fbul	19072	HILLTOP	230.0	1	1	60.4
59.6	fbus	19314	PEACOCK	230.0	1	1	60.4
59.6	fbul	19022	DAVIS	230.0	1	1	60.4
59.6	fbus	19042	PARKER	230.0	1	1	60.4

2008 HEAVY AUTUMN, NORTHERN ARIZONA ENERGY PROJECT, PRE-PROJECT
CASE: 08ha_pre_max-LibBP-rev1.sav
EOR=9300MW, Maximum WAPA-DSW Generation Modeled.
Mohave Off-line, Liberty Phase-Shift Transformer By-Passed.

NORTHERN ARIZONA ENERGY PROJECT - TRANSIENT STABILITY PLOTS - PAGE 1

BUS VOLTAGE (1)

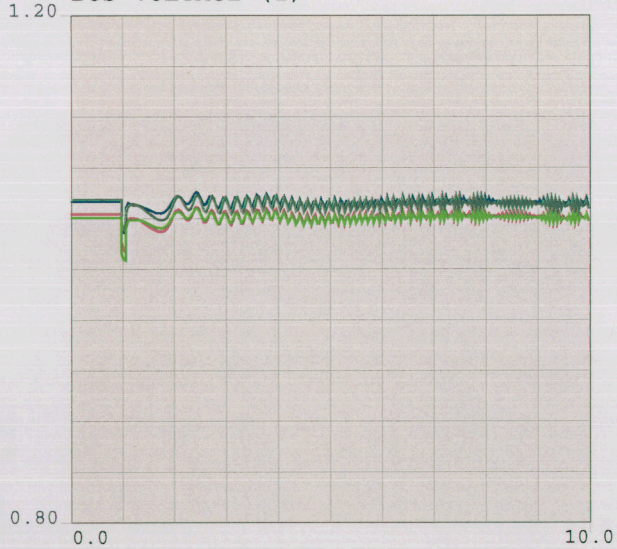

0.8	vbus	19038	MEAD	500.0	1	1	1.2
0.8	vbus	19315	PEACOCK	345.0	1	1	1.2
0.8	vbus	19053	LIBERTY	345.0	1	1	1.2
0.8	vbus	19037	MEAD	345.0	1	1	1.2

BUS VOLTAGE (2)

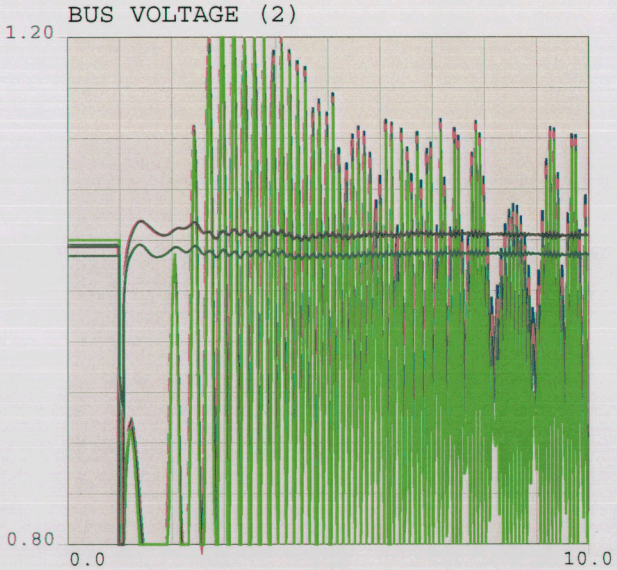

0.8	vbul	19310	GRIFFITH	230.0	1	1	1.2
0.8	vbul	19056	MCCONICO	230.0	1	1	1.2
0.8	vbul	19072	HILLTOP	230.0	1	1	1.2
0.8	vbus	19314	PEACOCK	230.0	1	1	1.2
0.8	vbul	19022	DAVIS	230.0	1	1	1.2
0.8	vbus	19042	PARKER	230.0	1	1	1.2

BUS FREQUENCY (1)

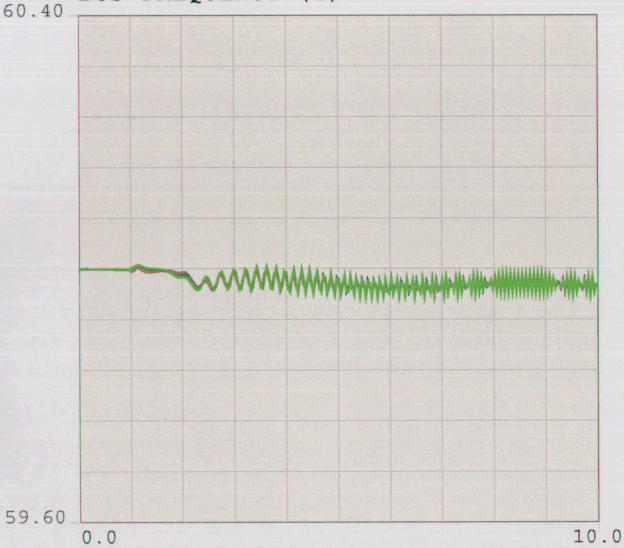

59.6	fbus	19038	MEAD	500.0	1	1	60.4
59.6	fbus	19037	MEAD	345.0	1	1	60.4
59.6	fbus	19315	PEACOCK	345.0	1	1	60.4
59.6	fbus	19053	LIBERTY	345.0	1	1	60.4

BUS FREQUENCY (2)

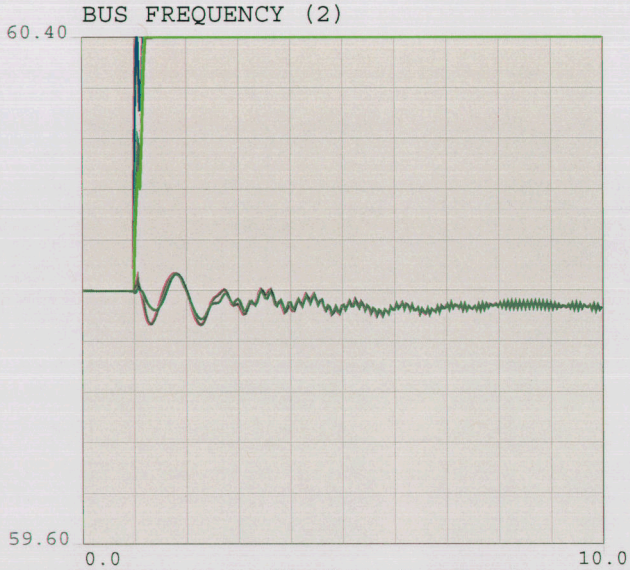

59.6	fbul	19310	GRIFFITH	230.0	1	1	60.4
59.6	fbul	19056	MCCONICO	230.0	1	1	60.4
59.6	fbul	19072	HILLTOP	230.0	1	1	60.4
59.6	fbus	19314	PEACOCK	230.0	1	1	60.4
59.6	fbul	19022	DAVIS	230.0	1	1	60.4
59.6	fbus	19042	PARKER	230.0	1	1	60.4

2008 HEAVY AUTUMN, NORTHERN ARIZONA ENERGY PROJECT, PRE-PROJECT
CASE: 08ha_pre_max-LibBP-rev1.sav
EOR=9300MW, Maximum WAPA-DSW Generation Modeled.
Mohave Off-line, Liberty Phase-Shift Transformer By-Passed.

NORTHERN ARIZONA ENERGY PROJECT - TRANSIENT STABILITY PLOTS - PAGE 1

BUS VOLTAGE (1)

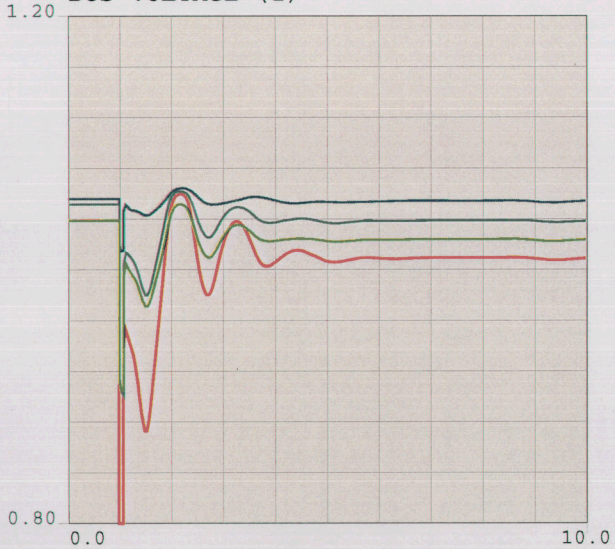

0.8	vbus	19038	MEAD	500.0	1	1	1.2
0.8	vbus	19315	PEACOCK	345.0	1	1	1.2
0.8	vbus	19053	LIBERTY	345.0	1	1	1.2
0.8	vbus	19037	MEAD	345.0	1	1	1.2

BUS VOLTAGE (2)

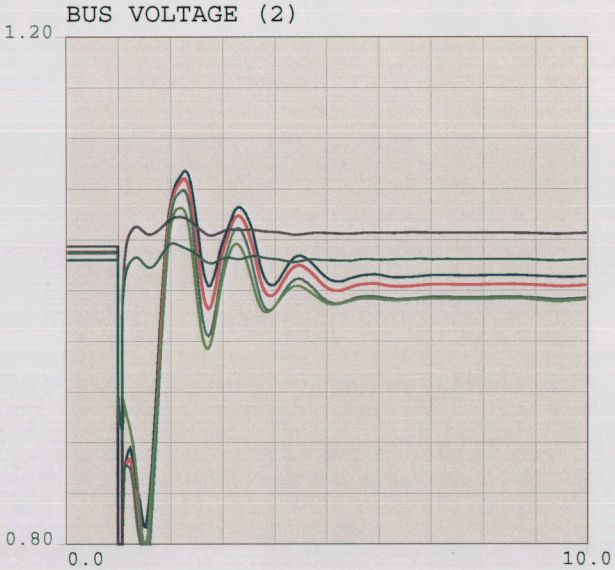

0.8	vbul	19310	GRIFFITH	230.0	1	1	1.2
0.8	vbul	19056	MCCONICO	230.0	1	1	1.2
0.8	vbul	19072	HILLTOP	230.0	1	1	1.2
0.8	vbus	19314	PEACOCK	230.0	1	1	1.2
0.8	vbul	19022	DAVIS	230.0	1	1	1.2
0.8	vbus	19042	PARKER	230.0	1	1	1.2

BUS FREQUENCY (1)

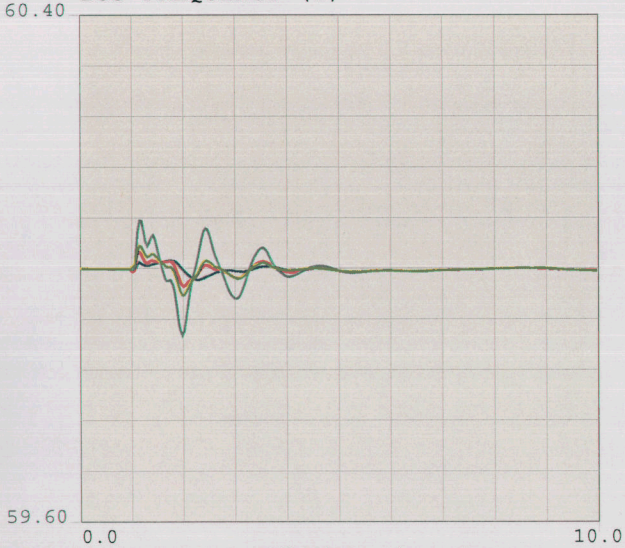

59.6	fbus	19038	MEAD	500.0	1	1	60.4
59.6	fbus	19037	MEAD	345.0	1	1	60.4
59.6	fbus	19315	PEACOCK	345.0	1	1	60.4
59.6	fbus	19053	LIBERTY	345.0	1	1	60.4

BUS FREQUENCY (2)

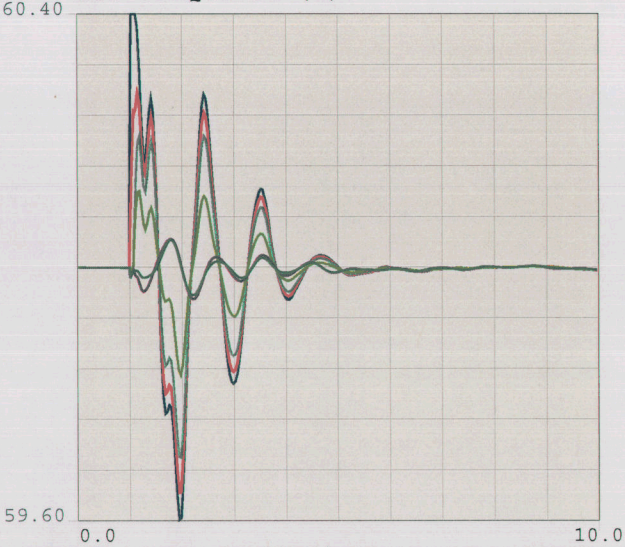

59.6	fbul	19310	GRIFFITH	230.0	1	1	60.4
59.6	fbul	19056	MCCONICO	230.0	1	1	60.4
59.6	fbul	19072	HILLTOP	230.0	1	1	60.4
59.6	fbus	19314	PEACOCK	230.0	1	1	60.4
59.6	fbul	19022	DAVIS	230.0	1	1	60.4
59.6	fbus	19042	PARKER	230.0	1	1	60.4

2008 HEAVY AUTUMN, NORTHERN ARIZONA ENERGY PROJECT, POST-PROJECT - Area Interchange
CASE: 08ha_pst_AI-LibBP-rev1.sav
EOR=9300MW, Minimum WAPA-DSW Generation Modeled.
Mohave Off-line, Liberty Phase-Shift Transformer By-passed.
Modeled Northern Arizona Energy Project - 180 MW Net

TERMINAL VOLTAGE

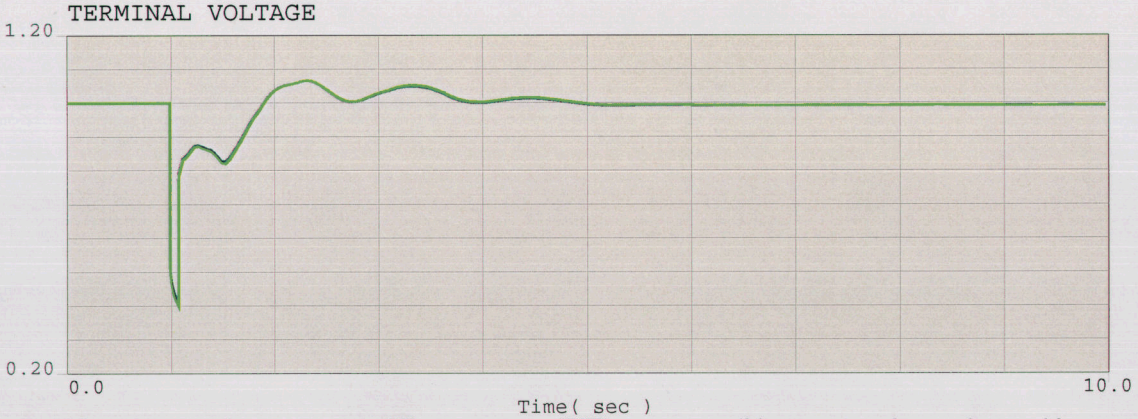

0.2	vt	19610	ARROYEP1	13.8	1	1	1.2
0.2	vt	19612	ARROYEP2	13.8	1	1	1.2
0.2	vt	19614	ARROYEP3	13.8	1	1	1.2
0.2	vt	19616	ARROYEP4	13.8	1	1	1.2

RELATIVE ROTOR ANGLE

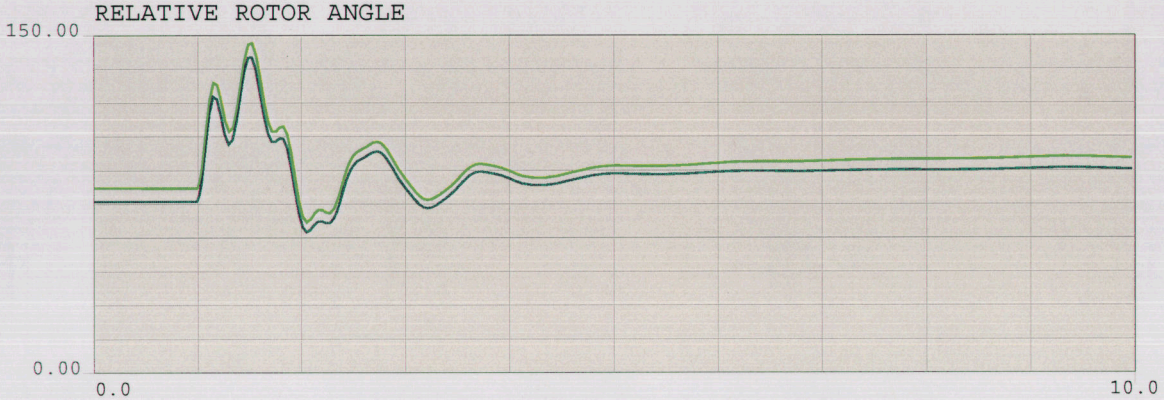

0.0	ang	19610	ARROYEP1	13.8	1	1	150.0
0.0	ang	19612	ARROYEP2	13.8	1	1	150.0
0.0	ang	19614	ARROYEP3	13.8	1	1	150.0
0.0	ang	19616	ARROYEP4	13.8	1	1	150.0

SHAFT SPEED

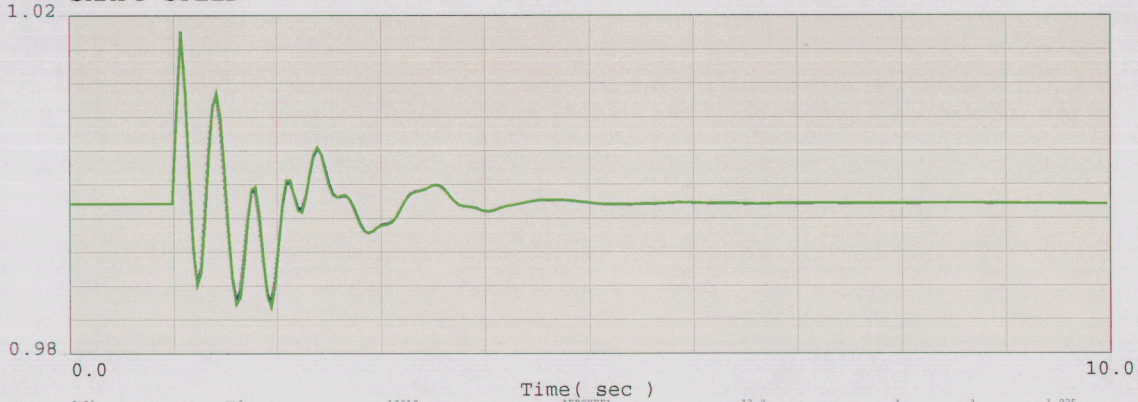

0.98	spd	19610	ARROYEP1	13.8	1	1	1.025
0.98	spd	19612	ARROYEP2	13.8	1	1	1.025
0.98	spd	19614	ARROYEP3	13.8	1	1	1.025
0.98	spd	19616	ARROYEP4	13.8	1	1	1.025

2008 HEAVY AUTUMN, NORTHERN ARIZONA ENERGY PROJECT, POST-PROJECT - Area Interchange
CASE: 08ha_pst_AI-LibBP-rev1.sav
EOR=9300MW, Minimum WAPA-DSW Generation Modeled.
Mohave Off-line, Liberty Phase-Shift Transformer By-passed.
Modeled Northern Arizona Energy Project - 180 MW Net

NORTHERN ARIZONA ENERGY PROJECT - TRANSIENT STABILITY PLOTS - PAGE 1

BUS VOLTAGE (1)

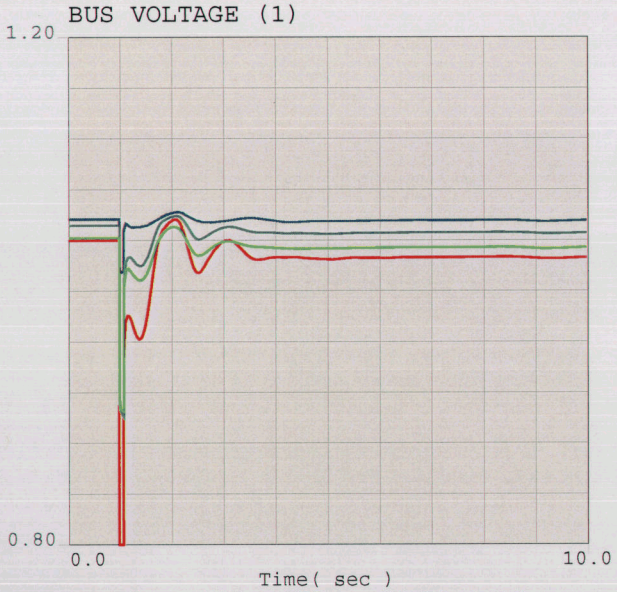

0.8	vbus	19038	MEAD	500.0	1	1	1.2
0.8	vbus	19315	PEACOCK	345.0	1	1	1.2
0.8	vbus	19053	LIBERTY	345.0	1	1	1.2
0.8	vbus	19037	MEAD	345.0	1	1	1.2

BUS VOLTAGE (2)

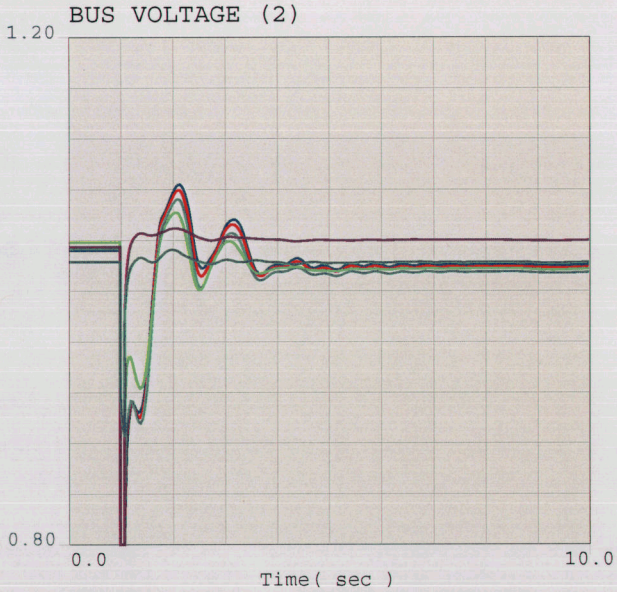

0.8	vbul	19310	GRIFFITH	230.0	1	1	1.2
0.8	vbul	19056	MCCONICO	230.0	1	1	1.2
0.8	vbul	19072	HILLTOP	230.0	1	1	1.2
0.8	vbus	19314	PEACOCK	230.0	1	1	1.2
0.8	vbul	19022	DAVIS	230.0	1	1	1.2
0.8	vbus	19042	PARKER	230.0	1	1	1.2

BUS FREQUENCY (1)

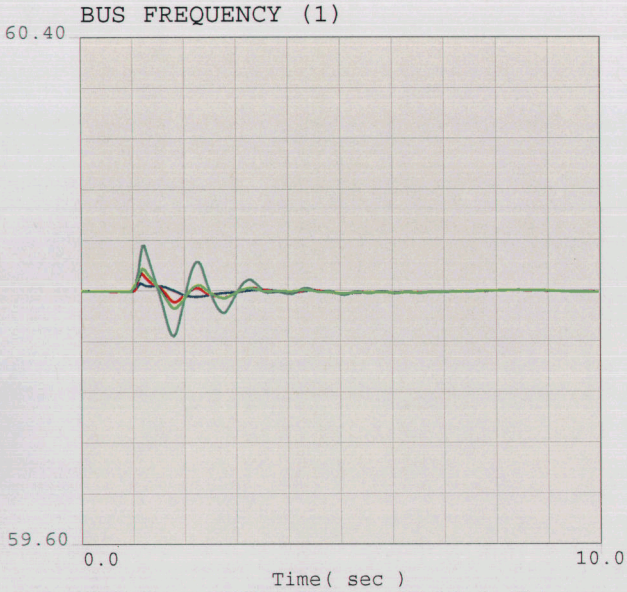

59.6	fbus	19038	MEAD	500.0	1	1	60.4
59.6	fbus	19037	MEAD	345.0	1	1	60.4
59.6	fbus	19315	PEACOCK	345.0	1	1	60.4
59.6	fbus	19053	LIBERTY	345.0	1	1	60.4

BUS FREQUENCY (2)

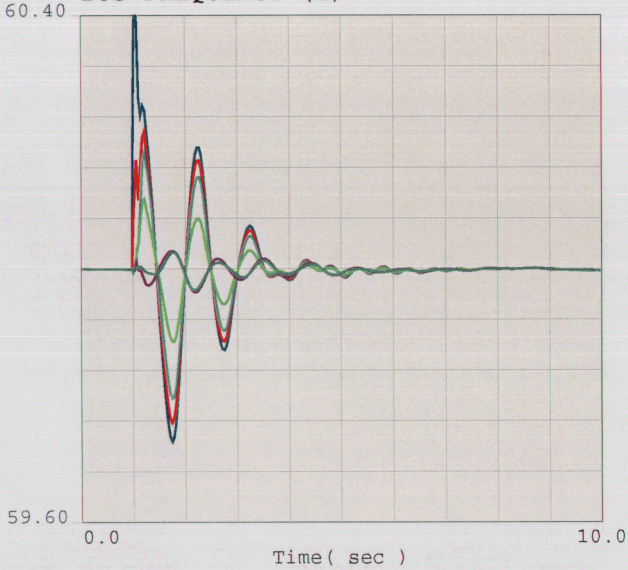

59.6	fbul	19310	GRIFFITH	230.0	1	1	60.4
59.6	fbul	19056	MCCONICO	230.0	1	1	60.4
59.6	fbul	19072	HILLTOP	230.0	1	1	60.4
59.6	fbus	19314	PEACOCK	230.0	1	1	60.4
59.6	fbul	19022	DAVIS	230.0	1	1	60.4
59.6	fbus	19042	PARKER	230.0	1	1	60.4

2008 HEAVY AUTUMN, NORTHERN ARIZONA ENERGY PROJECT, POST-PROJECT - UNS Load Increased
CASE: 08ha_pst_LD-LibBP-rev1.sav
COR=9300MW, Minimum WAPA-DSW Generation Modeled.
Mohave Off-line, Liberty Phase-Shift Transformer By-passed.
Modeled Northern Arizona Energy Project - 180 MW Net

TERMINAL VOLTAGE

RELATIVE ROTOR ANGLE

SHAFT SPEED

2008 HEAVY AUTUMN, NORTHERN ARIZONA ENERGY PROJECT, POST-PROJECT - UNS Load Increased
CASE: 08ha_pst_LD-LibBP-rev1.sav
EOR=9300MW, Minimum WAPA-DSW Generation Modeled.
Mohave Off-line, Liberty Phase-Shift Transformer By-passed.
Modeled Northern Arizona Energy Project - 180 MW Net

NORTHERN ARIZONA ENERGY PROJECT - TRANSIENT STABILITY PLOTS - PAGE 1

BUS VOLTAGE (1)

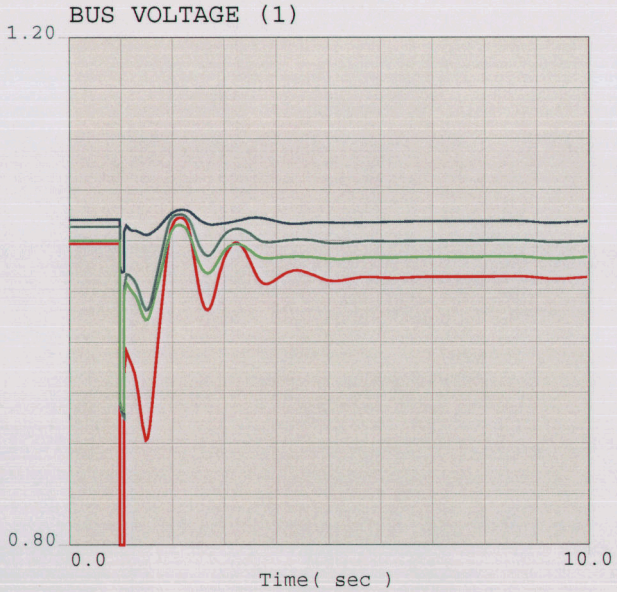

0.8	vbus	19038	MEAD	500.0	1	1	1.2
0.8	vbus	19315	PEACOCK	345.0	1	1	1.2
0.8	vbus	19053	LIBERTY	345.0	1	1	1.2
0.8	vbus	19037	MEAD	345.0	1	1	1.2

BUS VOLTAGE (2)

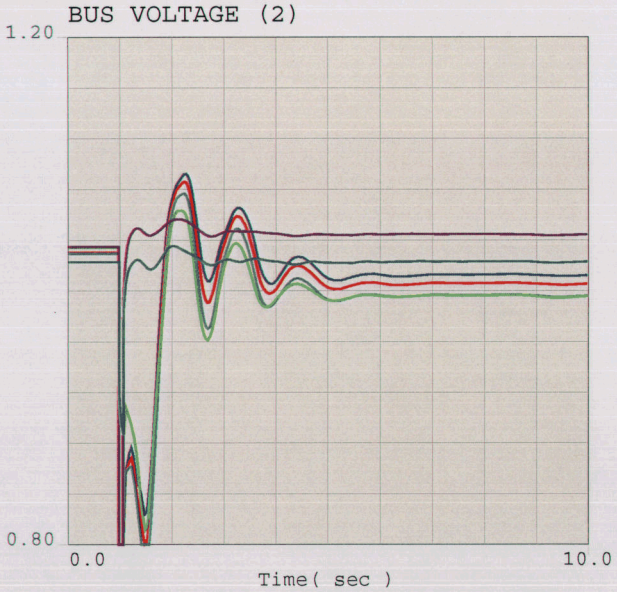

0.8	vbul	19310	GRIFFITH	230.0	1	1	1.2
0.8	vbul	19056	MCCONICO	230.0	1	1	1.2
0.8	vbul	19072	HILLTOP	230.0	1	1	1.2
0.8	vbus	19314	PEACOCK	230.0	1	1	1.2
0.8	vbul	19022	DAVIS	230.0	1	1	1.2
0.8	vbus	19042	PARKER	230.0	1	1	1.2

BUS FREQUENCY (1)

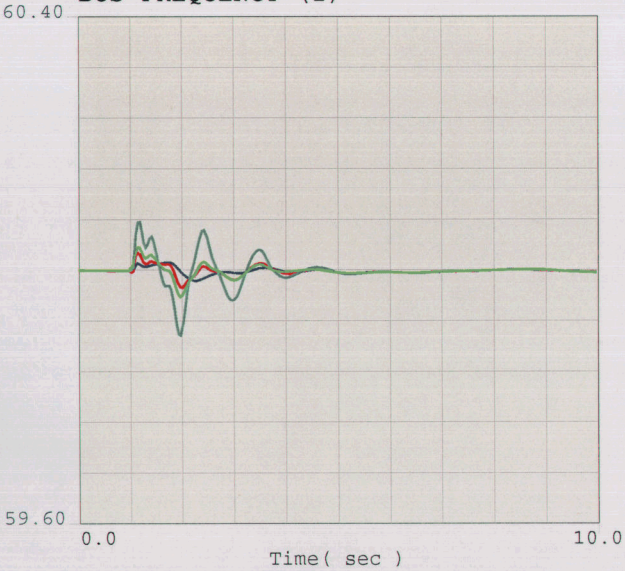

59.6	fbus	19038	MEAD	500.0	1	1	60.4
59.6	fbus	19037	MEAD	345.0	1	1	60.4
59.6	fbus	19315	PEACOCK	345.0	1	1	60.4
59.6	fbus	19053	LIBERTY	345.0	1	1	60.4

BUS FREQUENCY (2)

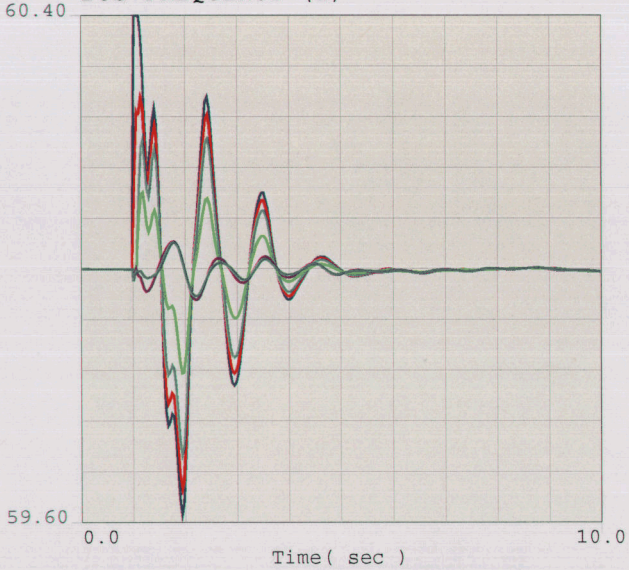

59.6	fbul	19310	GRIFFITH	230.0	1	1	60.4
59.6	fbul	19056	MCCONICO	230.0	1	1	60.4
59.6	fbul	19072	HILLTOP	230.0	1	1	60.4
59.6	fbus	19314	PEACOCK	230.0	1	1	60.4
59.6	fbul	19022	DAVIS	230.0	1	1	60.4
59.6	fbus	19042	PARKER	230.0	1	1	60.4

2008 HEAVY AUTUMN, NORTHERN ARIZONA ENERGY PROJECT, POST-PROJECT - UNS Load Increased
CASE: 08ha_pst_LD-LibBP-rev1.sav
EOR=9300MW, Minimum WAPA-DSW Generation Modeled.
Mohave Off-line, Liberty Phase-Shift Transformer By-passed.
Modeled Northern Arizona Energy Project - 180 MW Net

NORTHERN ARIZONA ENERGY PROJECT - TRANSIENT STABILITY PLOTS - PAGE 2

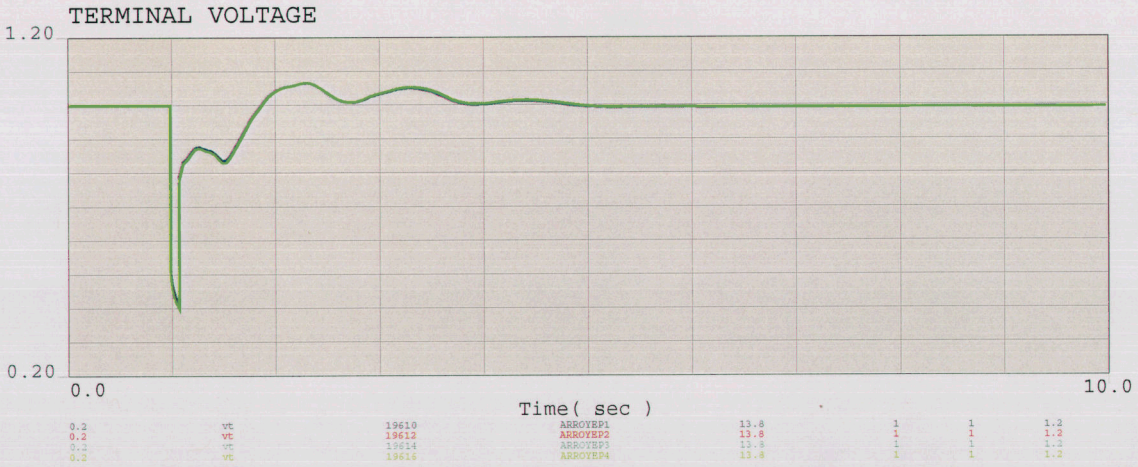

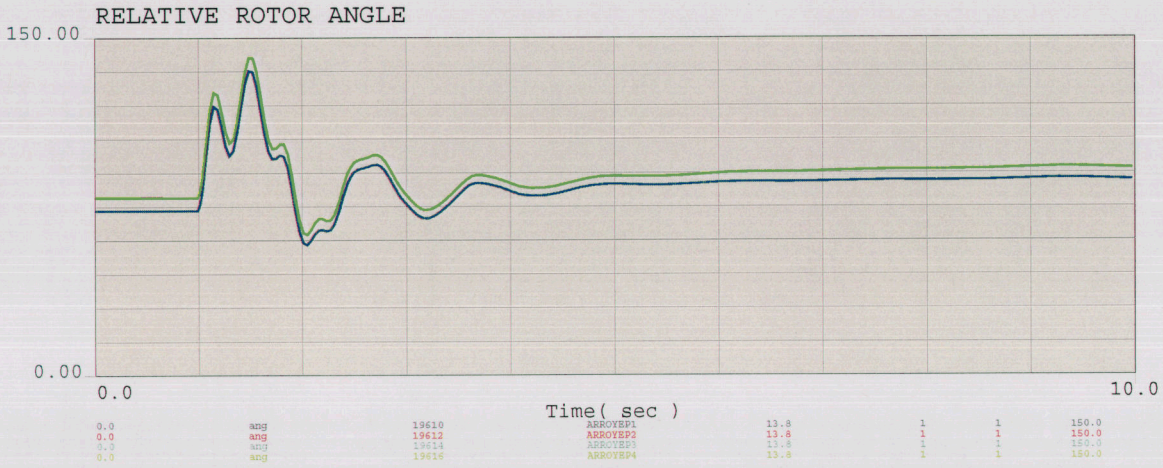

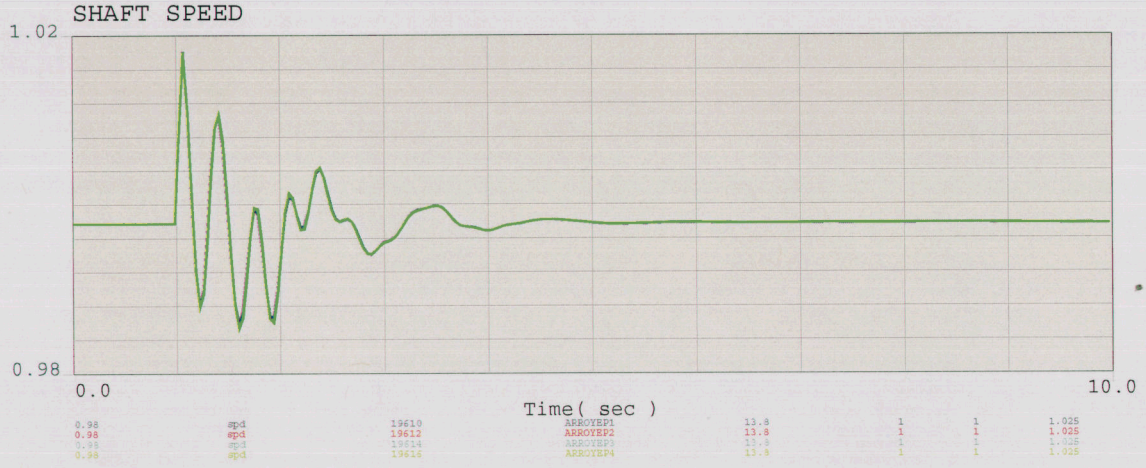

2008 HEAVY AUTUMN, NORTHERN ARIZONA ENERGY PROJECT, POST-PROJECT - UNS Load Increased
CASE: 08ha_pst_LD-LibBP-rev1.sav
EOR=9300MW, Minimum WAPA-DSW Generation Modeled.
Mohave Off-line, Liberty Phase-Shift Transformer By-passed.
Modeled Northern Arizona Energy Project - 180 MW Net

NORTHERN ARIZONA ENERGY PROJECT - TRANSIENT STABILITY PLOTS - PAGE 1

BUS VOLTAGE (1)

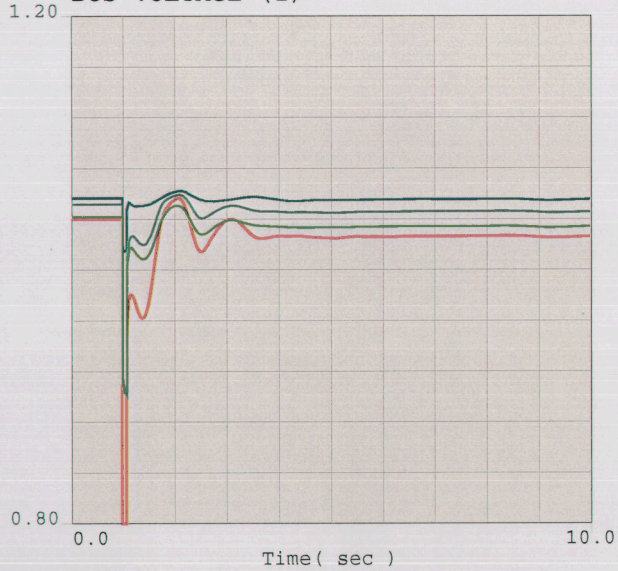

0.8	vbus	19038	MEAD	500.0	1	1	1.2
0.8	vbus	19315	PEACOCK	345.0	1	1	1.2
0.8	vbus	19053	LIBERTY	345.0	1	1	1.2
0.8	vbus	19037	MEAD	345.0	1	1	1.2

BUS VOLTAGE (2)

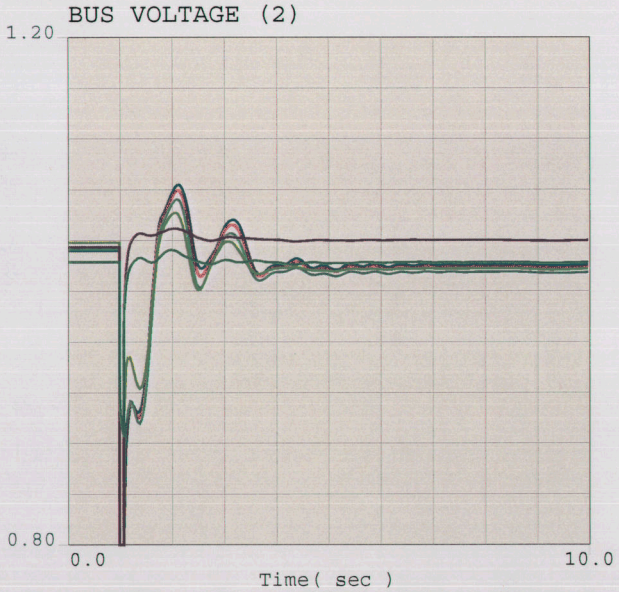

0.8	vbul	19310	GRIFFITH	230.0	1	1	1.2
0.8	vbul	19056	MCCONICO	230.0	1	1	1.2
0.8	vbul	19072	HILLTOP	230.0	1	1	1.2
0.8	vbus	19314	PEACOCK	230.0	1	1	1.2
0.8	vbul	19022	DAVIS	230.0	1	1	1.2
0.8	vbus	19042	PARKER	230.0	1	1	1.2

BUS FREQUENCY (1)

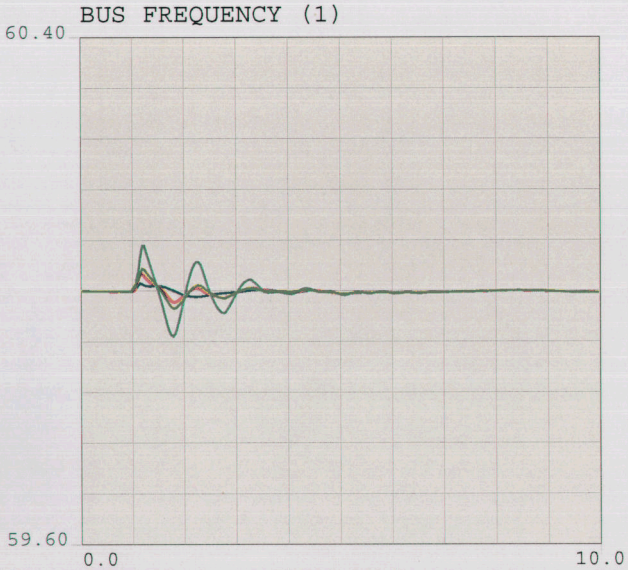

59.6	fbus	19038	MEAD	500.0	1	1	60.4
59.6	fbus	19037	MEAD	345.0	1	1	60.4
59.6	fbus	19315	PEACOCK	345.0	1	1	60.4
59.6	fbus	19053	LIBERTY	345.0	1	1	60.4

BUS FREQUENCY (2)

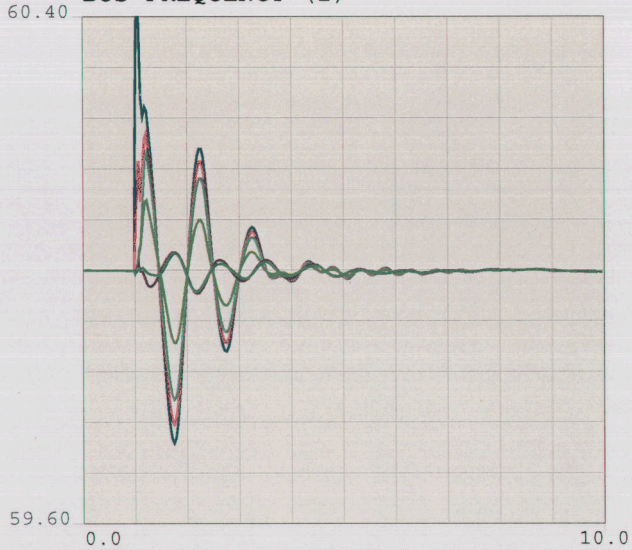

59.6	fbul	19310	GRIFFITH	230.0	1	1	60.4
59.6	fbul	19056	MCCONICO	230.0	1	1	60.4
59.6	fbul	19072	HILLTOP	230.0	1	1	60.4
59.6	fbus	19314	PEACOCK	230.0	1	1	60.4
59.6	fbul	19022	DAVIS	230.0	1	1	60.4
59.6	fbus	19042	PARKER	230.0	1	1	60.4

2008 HEAVY AUTUMN, NORTHERN ARIZONA ENERGY PROJECT, POST-PROJECT - UNS Load Increased
CASE: 08ha_pst_LD-LibBP-rev1.sav
EOR=9300MW, Minimum WAPA-DSW Generation Modeled.
Mohave Off-line, Liberty Phase-Shift Transformer By-passed.
Modeled Northern Arizona Energy Project - 180 MW Net

TERMINAL VOLTAGE

RELATIVE ROTOR ANGLE

SHAFT SPEED

2008 HEAVY AUTUMN, NORTHERN ARIZONA ENERGY PROJECT, POST-PROJECT - UNS Load Increased
CASE: 08ha_pst_LD-LibBP-rev1.sav
EOR=9300MW, Minimum WAPA-DSW Generation Modeled.
Mohave Off-line, Liberty Phase-Shift Transformer By-passed.
Modeled Northern Arizona Energy Project - 180 MW Net

NORTHERN ARIZONA ENERGY PROJECT - TRANSIENT STABILITY PLOTS - PAGE 1

BUS VOLTAGE (1)

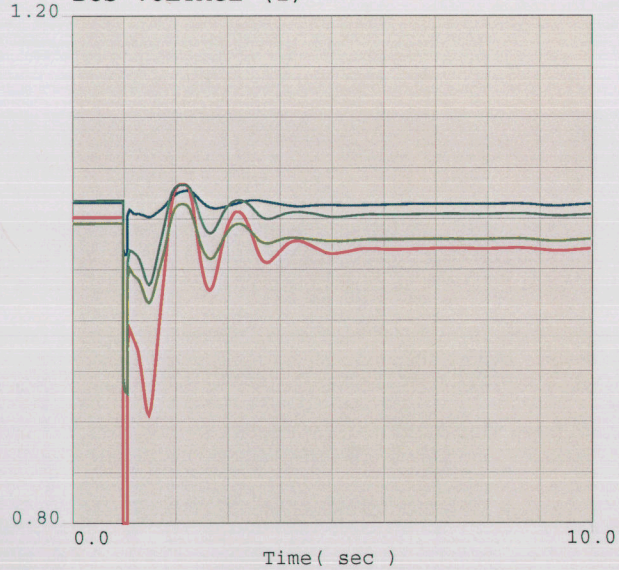

0.8	vbus	19038	MEAD	500.0	1	1	1.2
0.8	vbus	19315	PEACOCK	345.0	1	1	1.2
0.8	vbus	19053	LIBERTY	345.0	1	1	1.2
0.8	vbus	19037	MEAD	345.0	1	1	1.2

BUS VOLTAGE (2)

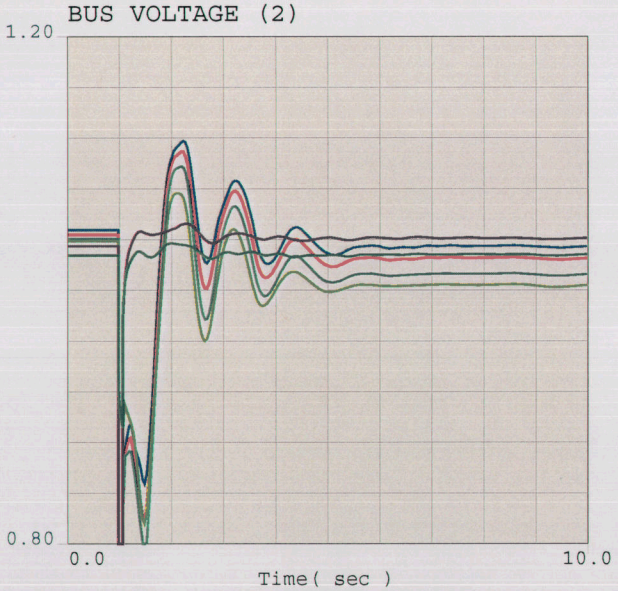

0.8	vbul	19310	GRIFFITH	230.0	1	1	1.2
0.8	vbul	19056	MCCONICO	230.0	1	1	1.2
0.8	vbul	19072	HILLTOP	230.0	1	1	1.2
0.8	vbus	19314	PEACOCK	230.0	1	1	1.2
0.8	vbul	19022	DAVIS	230.0	1	1	1.2
0.8	vbus	19042	PARKER	230.0	1	1	1.2

BUS FREQUENCY (1)

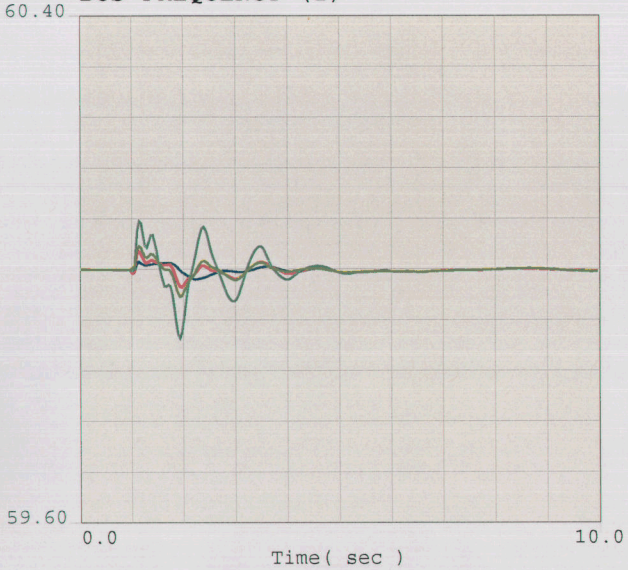

59.6	fbus	19038	MEAD	500.0	1	1	60.4
59.6	fbus	19037	MEAD	345.0	1	1	60.4
59.6	fbus	19315	PEACOCK	345.0	1	1	60.4
59.6	fbus	19053	LIBERTY	345.0	1	1	60.4

BUS FREQUENCY (2)

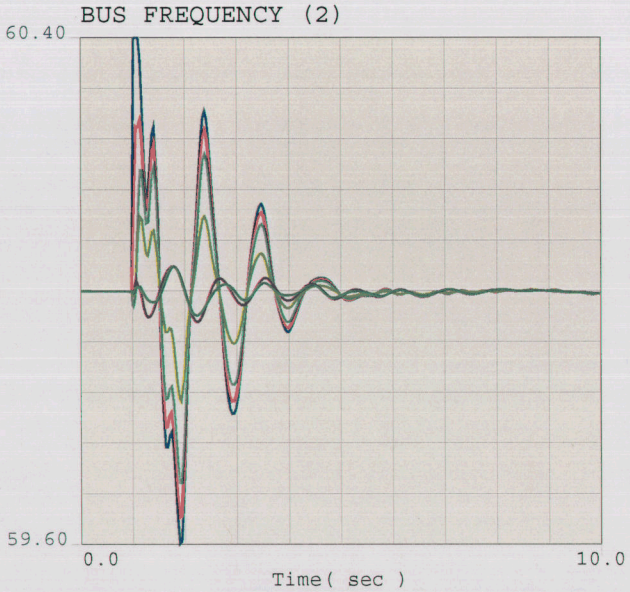

59.6	fbul	19310	GRIFFITH	230.0	1	1	60.4
59.6	fbul	19056	MCCONICO	230.0	1	1	60.4
59.6	fbul	19072	HILLTOP	230.0	1	1	60.4
59.6	fbus	19314	PEACOCK	230.0	1	1	60.4
59.6	fbul	19022	DAVIS	230.0	1	1	60.4
59.6	fbus	19042	PARKER	230.0	1	1	60.4

2008 HEAVY AUTUMN, NORTHERN ARIZONA ENERGY PROJECT, POST-PROJECT - Area Interchange
CASE: 08ha_pst_maxAI-LibBP-rev1.sav
EOR=9300MW, Maximum WAPA-DSW Generation Modeled.
Mohave Off-line, Liberty Phase-Shift Transformer By-passed.
Modeled Northern Arizona Energy Project - 180 MW Net

TERMINAL VOLTAGE

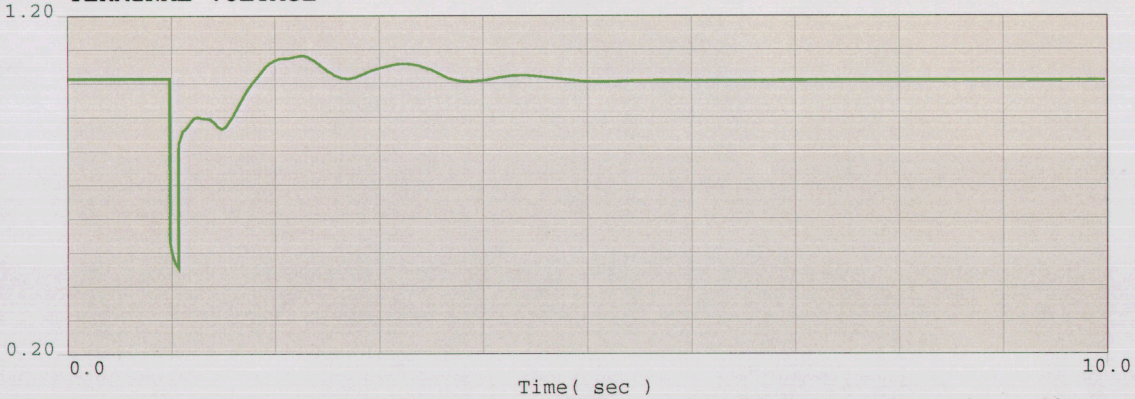

0.2	vt	19610	ARROYEP1	13.8	1	1	1.2
0.2	vt	19612	ARROYEP2	13.8	1	1	1.2
0.2	vt	19614	ARROYEP3	13.8	1	1	1.2
0.2	vt	19616	ARROYEP4	13.8	1	1	1.2

RELATIVE ROTOR ANGLE

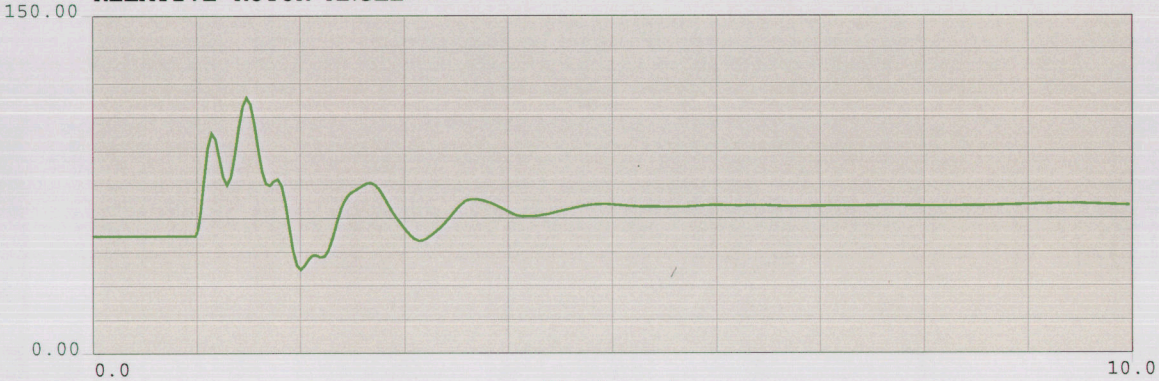

0.0	ang	19610	ARROYEP1	13.8	1	1	150.0
0.0	ang	19612	ARROYEP2	13.8	1	1	150.0
0.0	ang	19614	ARROYEP3	13.8	1	1	150.0
0.0	ang	19616	ARROYEP4	13.8	1	1	150.0

SHAFT SPEED

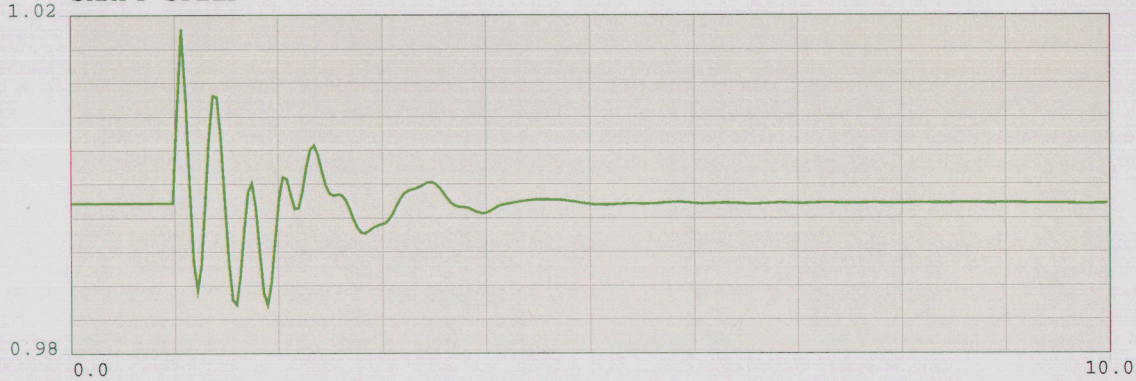

0.98	spd	19610	ARROYEP1	13.8	1	1	1.025
0.98	spd	19612	ARROYEP2	13.8	1	1	1.025
0.98	spd	19614	ARROYEP3	13.8	1	1	1.025
0.98	spd	19616	ARROYEP4	13.8	1	1	1.025

2008 HEAVY AUTUMN, NORTHERN ARIZONA ENERGY PROJECT, POST-PROJECT - Area Interchange
CASE: 08ha_pst_maxAI-LibBP-rev1.sav
EOR=9300MW, Maximum WAPA-DSW Generation Modeled.
Mohave Off-line, Liberty Phase-Shift Transformer By-passed.
Modeled Northern Arizona Energy Project - 180 MW Net

NORTHERN ARIZONA ENERGY PROJECT - TRANSIENT STABILITY PLOTS - PAGE 1

BUS VOLTAGE (1)

0.8	vbus	19038	MEAD	500.0	1	1	1.2
0.8	vbus	19315	PEACOCK	345.0	1	1	1.2
0.8	vbus	19053	LIBERTY	345.0	1	1	1.2
0.8	vbus	19037	MEAD	345.0	1	1	1.2

BUS VOLTAGE (2)

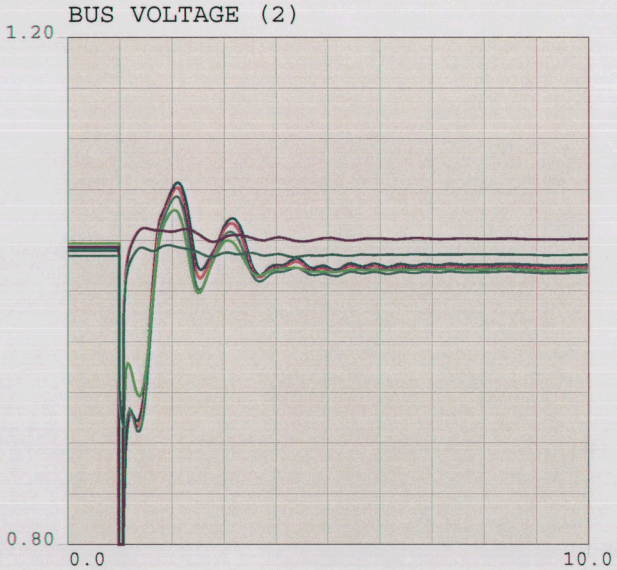

0.8	vbul	19310	GRIFFITH	230.0	1	1	1.2
0.8	vbul	19056	MCCONICO	230.0	1	1	1.2
0.8	vbul	19072	HILLTOP	230.0	1	1	1.2
0.8	vbus	19314	PEACOCK	230.0	1	1	1.2
0.8	vbul	19022	DAVIS	230.0	1	1	1.2
0.8	vbus	19042	PARKER	230.0	1	1	1.2

BUS FREQUENCY (1)

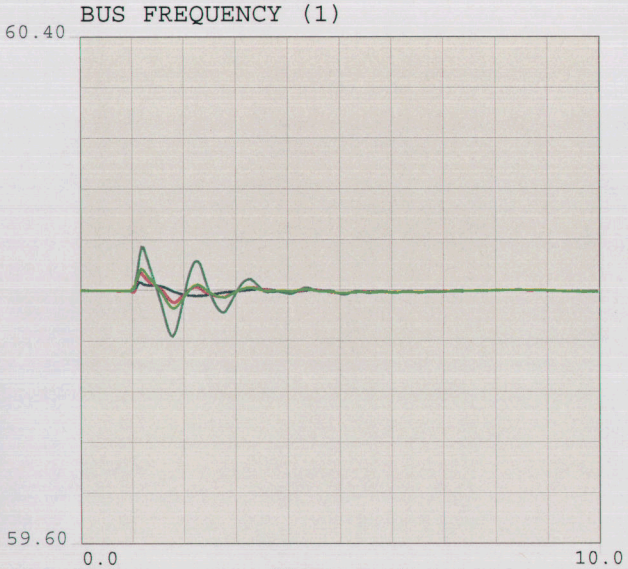

59.6	fbus	19038	MEAD	500.0	1	1	60.4
59.6	fbus	19037	MEAD	345.0	1	1	60.4
59.6	fbus	19315	PEACOCK	345.0	1	1	60.4
59.6	fbus	19053	LIBERTY	345.0	1	1	60.4

BUS FREQUENCY (2)

59.6	fbul	19310	GRIFFITH	230.0	1	1	60.4
59.6	fbul	19056	MCCONICO	230.0	1	1	60.4
59.6	fbul	19072	HILLTOP	230.0	1	1	60.4
59.6	fbus	19314	PEACOCK	230.0	1	1	60.4
59.6	fbul	19022	DAVIS	230.0	1	1	60.4
59.6	fbus	19042	PARKER	230.0	1	1	60.4

2008 HEAVY AUTUMN, NORTHERN ARIZONA ENERGY PROJECT, POST-PROJECT - Area Interchange
CASE: 08ha_pst_maxAI-LibBP-rev1.sav
EOR=9300MW, Maximum WAPA-DSW Generation Modeled.
Mohave Off-line, Liberty Phase-Shift Transformer By-passed.
Modeled Northern Arizona Energy Project - 180 MW Net

NORTHERN ARIZONA ENERGY PROJECT - TRANSIENT STABILITY PLOTS - PAGE 2

TERMINAL VOLTAGE

RELATIVE ROTOR ANGLE

SHAFT SPEED

2008 HEAVY AUTUMN, NORTHERN ARIZONA ENERGY PROJECT, POST-PROJECT - Area Interchange
CASE: 08ha_pst_maxAI-LibBP-rev1.sav
EOR=9300MW, Maximum WAPA-DSW Generation Modeled.
Mohave Off-line, Liberty Phase-Shift Transformer By-passed.
Modeled Northern Arizona Energy Project - 180 MW Net

NORTHERN ARIZONA ENERGY PROJECT - TRANSIENT STABILITY PLOTS - PAGE 1

BUS VOLTAGE (1)

0.8	vbus	19038	MEAD	500.0	1	1	1.2
0.8	vbus	19315	PEACOCK	345.0	1	1	1.2
0.8	vbus	19053	LIBERTY	345.0	1	1	1.2
0.8	vbus	19037	MEAD	345.0	1	1	1.2

BUS VOLTAGE (2)

0.8	vbul	19310	GRIFFITH	230.0	1	1	1.2
0.8	vbul	19056	MCCONICO	230.0	1	1	1.2
0.8	vbul	19072	HILLTOP	230.0	1	1	1.2
0.8	vbus	19314	PEACOCK	230.0	1	1	1.2
0.8	vbul	19022	DAVIS	230.0	1	1	1.2
0.8	vbus	19042	PARKER	230.0	1	1	1.2

BUS FREQUENCY (1)

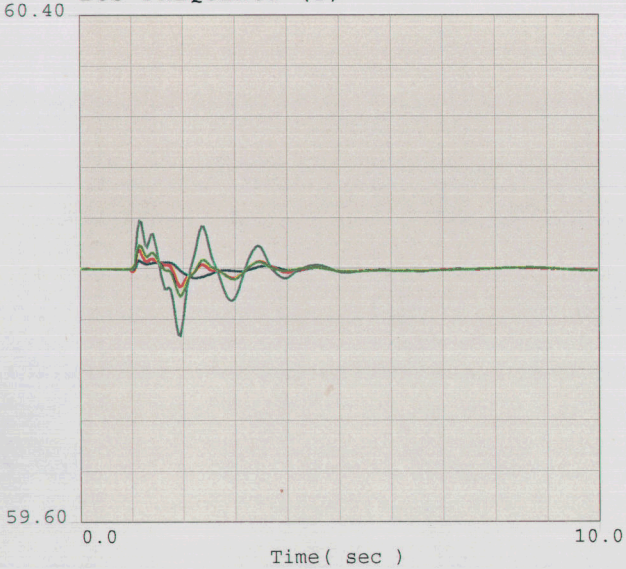

59.6	fbus	19038	MEAD	500.0	1	1	60.4
59.6	fbus	19037	MEAD	345.0	1	1	60.4
59.6	fbus	19315	PEACOCK	345.0	1	1	60.4
59.6	fbus	19053	LIBERTY	345.0	1	1	60.4

BUS FREQUENCY (2)

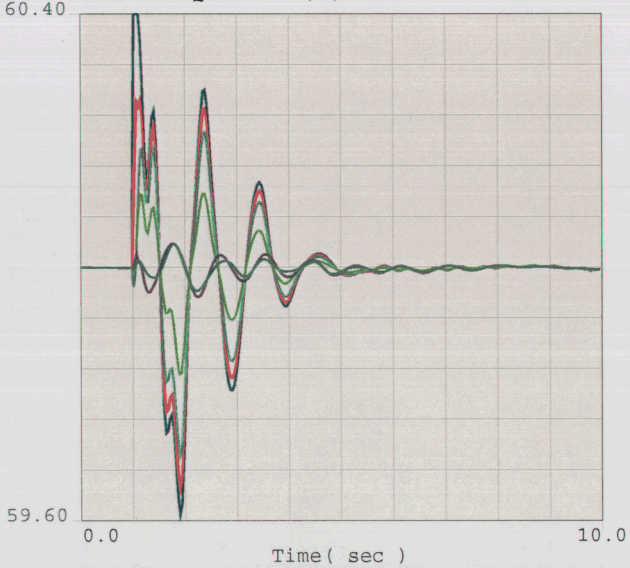

59.6	fbul	19310	GRIFFITH	230.0	1	1	60.4
59.6	fbul	19056	MCCONICO	230.0	1	1	60.4
59.6	fbul	19072	HILLTOP	230.0	1	1	60.4
59.6	fbus	19314	PEACOCK	230.0	1	1	60.4
59.6	fbul	19022	DAVIS	230.0	1	1	60.4
59.6	fbus	19042	PARKER	230.0	1	1	60.4

2008 HEAVY AUTUMN, NORTHERN ARIZONA ENERGY PROJECT, POST-PROJECT - UNS Load Increased
CASE: 08ha_pst_maxLD-LibBP-rev1.sav
EOR=9300MW, Maximum WAPA-DSW Generation Modeled.
Mohave Off-line, Liberty Phase-Shift Transformer By-passed.
Modeled Northern Arizona Energy Project - 180 MW Net

08hapst_maxLD-LibBP_GR-PK_McConnico-Davis-230-slo.chf

c:\upslf16\mypslf

Thu Jul 19 16:20:34 2007

NORTHERN ARIZONA ENERGY PROJECT - TRANSIENT STABILITY PLOTS - PAGE 2

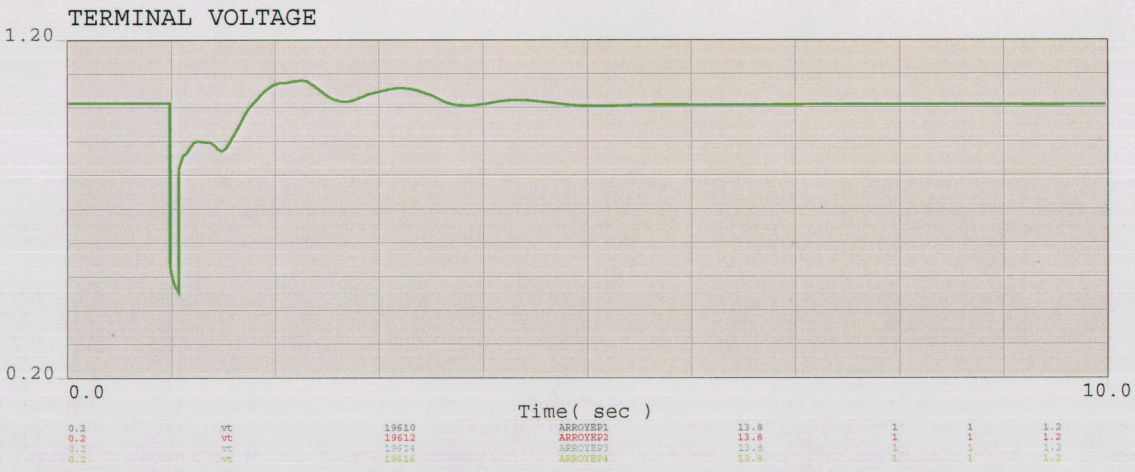

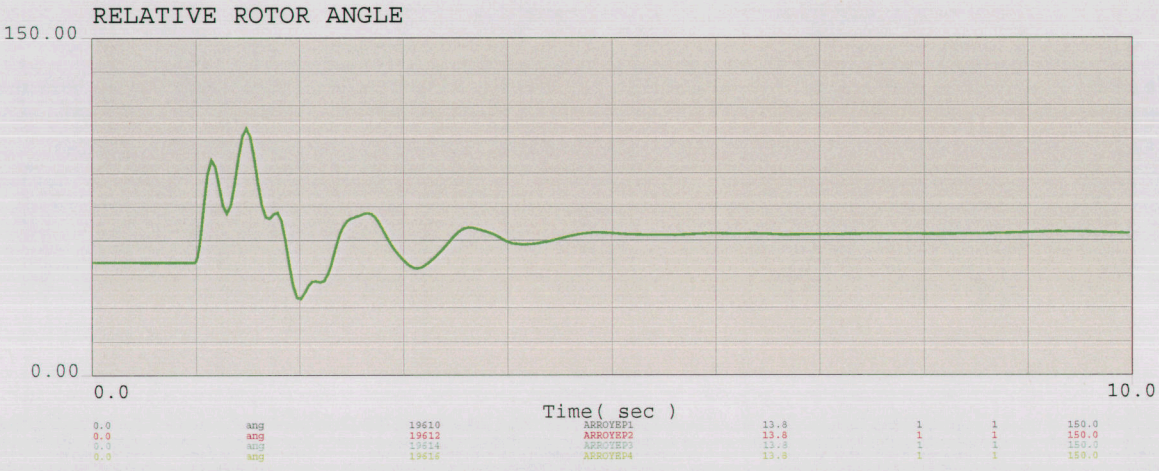

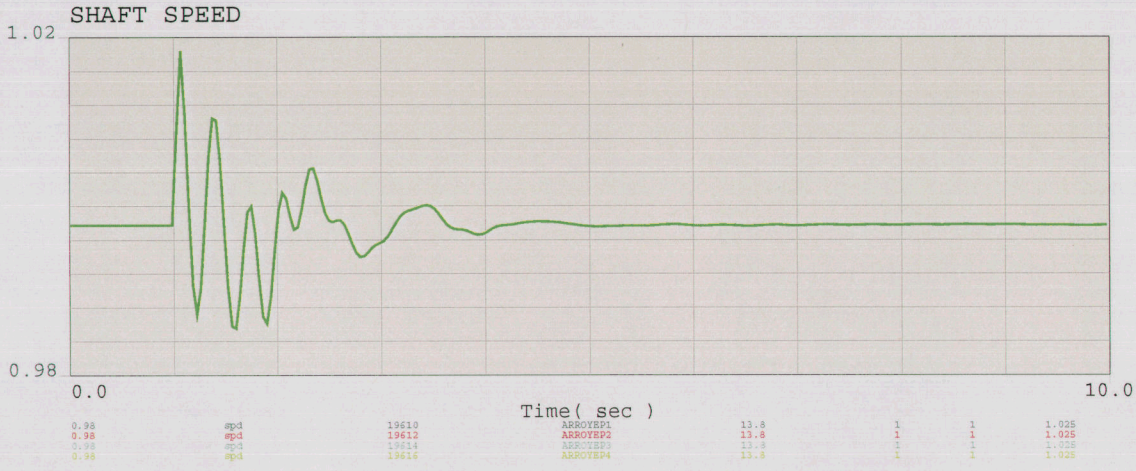

2008 HEAVY AUTUMN, NORTHERN ARIZONA ENERGY PROJECT, POST-PROJECT - UNS Load Increased
CASE: 08ha_pst_maxLD-LibBP-rev1.sav
EOR=9300MW, Maximum WAPA-DSW Generation Modeled.
Mohave Off-line, Liberty Phase-Shift Transformer By-passed.
Modeled Northern Arizona Energy Project - 180 MW Net

NORTHERN ARIZONA ENERGY PROJECT - TRANSIENT STABILITY PLOTS - PAGE 1

BUS VOLTAGE (1)

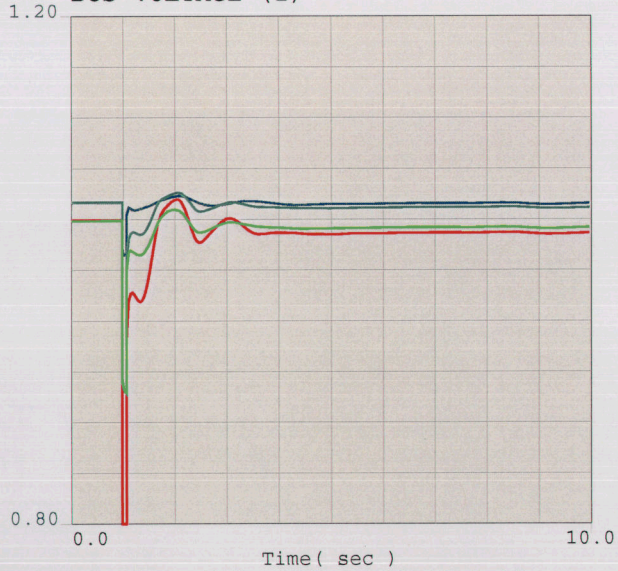

0.8	vbus	19038	MEAD	500.0	1	1	1.2
0.8	vbus	19315	PEACOCK	345.0	1	1	1.2
0.8	vbus	19053	LIBERTY	345.0	1	1	1.2
0.8	vbus	19037	MEAD	345.0	1	1	1.2

BUS VOLTAGE (2)

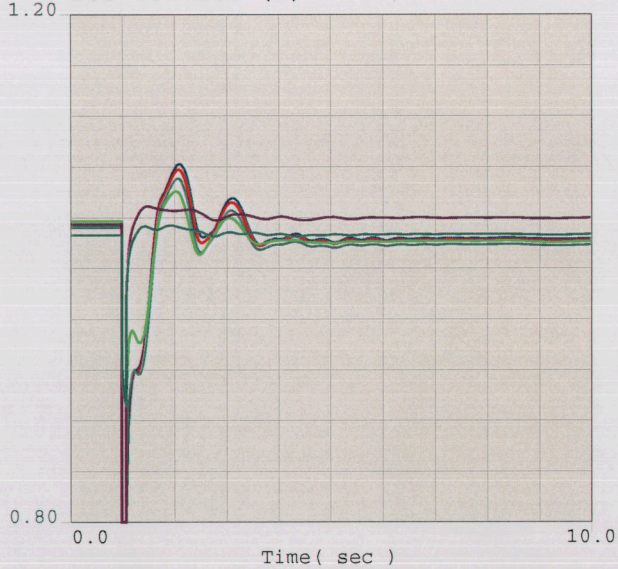

0.8	vbul	19310	GRIFFITH	230.0	1	1	1.2
0.8	vbul	19056	MCCONICO	230.0	1	1	1.2
0.8	vbul	19072	HILLTOP	230.0	1	1	1.2
0.8	vbus	19314	PEACOCK	230.0	1	1	1.2
0.8	vbul	19022	DAVIS	230.0	1	1	1.2
0.8	vbus	19042	PARKER	230.0	1	1	1.2

BUS FREQUENCY (1)

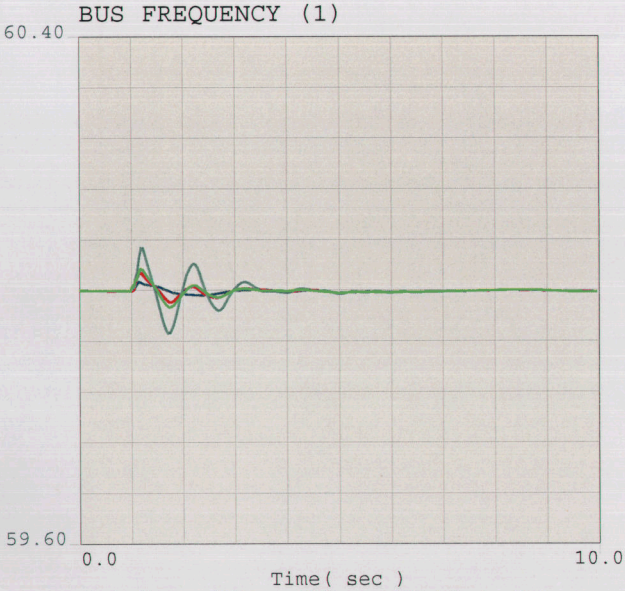

59.6	fbus	19038	MEAD	500.0	1	1	60.4
59.6	fbus	19037	MEAD	345.0	1	1	60.4
59.6	fbus	19315	PEACOCK	345.0	1	1	60.4
59.6	fbus	19053	LIBERTY	345.0	1	1	60.4

BUS FREQUENCY (2)

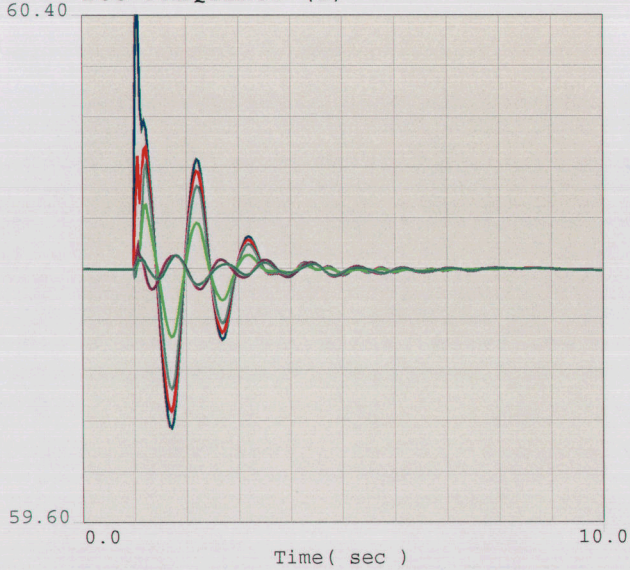

59.6	fbul	19310	GRIFFITH	230.0	1	1	60.4
59.6	fbul	19056	MCCONICO	230.0	1	1	60.4
59.6	fbul	19072	HILLTOP	230.0	1	1	60.4
59.6	fbus	19314	PEACOCK	230.0	1	1	60.4
59.6	fbul	19022	DAVIS	230.0	1	1	60.4
59.6	fbus	19042	PARKER	230.0	1	1	60.4

2008 HEAVY AUTUMN, NORTHERN ARIZONA ENERGY PROJECT, POST-PROJECT - UNS Load Increased
CASE: 08ha_pst_maxLD-LibBP-rev1.sav
EOR=9300MW, Maximum WAPA-DSW Generation Modeled.
Mohave Off-line, Liberty Phase-Shift Transformer By-passed.
Modeled Northern Arizona Energy Project - 180 MW Net

TERMINAL VOLTAGE

RELATIVE ROTOR ANGLE

SHAFT SPEED

2008 HEAVY AUTUMN, NORTHERN ARIZONA ENERGY PROJECT, POST-PROJECT - UNS Load Increased
CASE: 08ha_pst_maxLD-LibBP-rev1.sav
EOR=9300MW, Maximum WAPA-DSW Generation Modeled.
Mohave Off-line, Liberty Phase-Shift Transformer By-passed.
Modeled Northern Arizona Energy Project - 180 MW Net

Appendix F

Load Distribution and Generation Shift Factors

Load Distribution and Generation Shift factors have been calculated and are tabulated in **Tables F-1** and **F-2**. **Table F-1** is based on the Liberty PST in-service at 450 MW and **Table F-2** is based on the Liberty PST being by-passed.

For the N-1-1 contingencies, the load distribution factors were calculated based on "Contingency1" being out of service then "Contingency2". Therefore, there is a load factor based on the 1st element being out service and then a load factor based on the 1st and 2nd elements being out of service. These load factors are the amount of power that will flow onto the "Affected Element" for loss of that element

The "Calc Max Post-contingency Loading" column is the flow limit calculation based on the base case flow. This value exceeds the continuous rating of the element. However, from an operations perspective, the flow limit value should never exceed the continuous rating of the "Affected Element".

The "Gen Reduction Requirement" is the amount of NAEP/Griffith generation that needs to be reduced to achieve a post-contingency power flow less than the normal rating of the element.

Table F-1. 2008 Heavy Autumn – Liberty PST In-Service at 450 MW (s2n).

Contingency1	Contingency2	AFFECTED ELEMENT	Contingency1 %LODF	Contingency2 %LODF	Normal Rating (amps)	Calc Max Post-contingency Loading (amps)	Gen Shift Factor	Gen Reduction Rqmt (MW)
Griffith - Peacock 230 kV	Davis - Mc Connico 230 kV	Hilltop - Mc Connico 230 kV	0.7512	1.0000	1130	1,678	1.0000	218
Griffith - Peacock 230 kV	Hilltop - Peacock 230 kV	Davis - Mc Connico 230 kV	0.2488	1.0000	1130	1,678	1.0000	218
Griffith - Peacock 230 kV	Hilltop - Mc Connico 230 kV	Davis - Mc Connico 230 kV	0.2488	1.0000	1130	1,428	1.0000	119
Peacock 345/230 kV Xfmr	Davis - Mc Connico 230 kV	Prescott - Yavapai 230 kV	0.2357	0.7013	670	991	0.7120	91
Peacock 345/230 kV Xfmr	Davis - Mc Connico 230 kV	Round Valley - Peacock 230 kV	0.3427	1.0000	816	1,423	1.0000	242
Peacock 345/230 kV Xfmr	Davis - Mc Connico 230 kV	Round Valley - Prescott 230 kV	0.3427	1.0000	816	1,385	1.0000	227
Peacock 345/230 kV Xfmr	Griffith - Mc Connico 230 kV	Hilltop - Peacock 230 kV	0.3452	0.8722	1130	1,273	0.6186	35
South Point-Topock No.1 230 kV	S.Point-Topock No.2 230 kV	Davis - Mc Connico 230 kV	0.0000	0.1886	1130	1,698	0.4137	94
Mead 345/230 kV Xfmr	-	Davis - Mc Connico 230 kV	0.5283	-	1130	1,501	0.5057	75
Mead 345/230 kV Xfmr	Black Mesa - Topock 230 kV	Davis - Mc Connico 230 kV	0.5283	-0.1326	1130	1,425	0.4956	58
Mead 345/230 kV Xfmr	Davis - Mc Connico 230 kV	Round Valley - Peacock 230 kV	0.1595	0.3358	816	891	0.3411	10
Mead 345/230 kV Xfmr	Davis - Mc Cullough 230 kV	Davis - Mc Connico 230 kV	0.5283	-0.2679	1130	1,337	0.4569	38
Mead 345/230 kV Xfmr	Davis - Mead N 230 kV	Davis - Mc Connico 230 kV	0.5283	-0.2656	1130	1,347	0.4579	40
Mead 345/230 kV Xfmr	Davis - Topock No.2 230 kV	Davis - Mc Connico 230 kV	0.5283	0.0778	1130	1,495	0.4999	73
Mead 345/230 kV Xfmr	Davis - ZORB 230 kV	Davis - Mc Connico 230 kV	0.5283	-0.0745	1130	1,470	0.5004	68
Mead 345/230 kV Xfmr	Griffith - Mc Connico 230 kV	Hilltop - Peacock 230 kV	0.1791	0.7856	1130	1,446	0.3653	46
Mead 345/230 kV Xfmr	Griffith - Peacock 230 kV	Davis - Mc Connico 230 kV	0.5283	0.2144	1130	1,540	0.5797	95
Mead 345/230 kV Xfmr	Hilltop - Mc Connico 230 kV	Davis - Mc Connico 230 kV	0.5283	-0.2319	1130	1,475	0.5402	74
Mead 345/230 kV Xfmr	Hilltop - Peacock 230 kV	Davis - Mc Connico 230 kV	0.5283	-0.2319	1130	1,428	0.5402	64
Mead 345/230 kV Xfmr	Liberty - Westwing 230 kV	Davis - Mc Connico 230 kV	0.5283	0.0296	1130	1,494	0.5080	74
Mead 345/230 kV Xfmr	Mead S - Mead N No.1 230 kV	Davis - Mc Connico 230 kV	0.5283	0.0011	1130	1,492	0.5057	73
Mead 345/230 kV Xfmr	Mead S - Mead N No.2 230 kV	Davis - Mc Connico 230 kV	0.5283	0.0011	1130	1,492	0.5057	73
Mead 345/230 kV Xfmr	N.Havasu - Topock 230 kV	Davis - Mc Connico 230 kV	0.5283	-0.1242	1130	1,433	0.4972	60
Mead 345/230 kV Xfmr	South Point-Topock No.1 230 kV	Davis - Mc Connico 230 kV	0.5283	0.0000	1130	1,491	0.5057	73
Mead 345/230 kV Xfmr	South Point-Topock No.2 230 kV	Davis - Mc Connico 230 kV	0.5283	0.0000	1130	1,491	0.5057	73
Mead 345/230 kV Xfmr	Topock - ZORB 230 kV	Davis - Mc Connico 230 kV	0.5283	0.0745	1130	1,498	0.5004	73
Peacock - Mead 345 kV	-	Davis - Mc Connico 230 kV	0.5283	-	1130	1,501	0.5057	75
Peacock - White Hill 345 kV	Black Mesa - Topock 230 kV	Davis - Mc Connico 230 kV	0.5283	-0.1326	1130	1,425	0.4956	58
Peacock - White Hill 345 kV	Davis - Mc Connico 230 kV	Round Valley - Peacock 230 kV	0.1595	0.3358	816	891	0.3411	10
Peacock - White Hill 345 kV	Davis - Mc Cullough 230 kV	Davis - Mc Connico 230 kV	0.5283	-0.2679	1130	1,337	0.4569	38
Peacock - White Hill 345 kV	Davis - Mead N 230 kV	Davis - Mc Connico 230 kV	0.5283	-0.2656	1130	1,347	0.4579	40

Table F-1. (continued) 2008 Heavy Autumn – Liberty PST In-Service at 450 MW (s2n).

Contingency1	Contingency2	AFFECTED ELEMENT	Contingency1 %LODF	Contingency2 %LODF	Normal Rating (amps)	Calc Max Post-contingency Loading (amps)	Gen Shift Factor	Gen Reduction Rqmt (MW)
Peacock - White Hill 345 kV	Davis - Topock No.2 230 kV	Davis - Mc Connico 230 kV	0.5283	0.0778	1130	1,501	0.5057	75
Peacock - White Hill 345 kV	Davis - ZORB 230 kV	Davis - Mc Connico 230 kV	0.5283	-0.0745	1130	1,425	0.4956	58
Peacock - White Hill 345 kV	Griffith - Mc Connico 230 kV	Hilltop - Peacock 230 kV	0.1791	0.7856	816	891	0.3411	10
Peacock - White Hill 345 kV	Griffith - Peacock 230 kV	Davis - Mc Connico 230 kV	0.5283	0.2144	1130	1,337	0.4569	38
Peacock - White Hill 345 kV	Hilltop - Mc Connico 230 kV	Davis - Mc Connico 230 kV	0.5283	-0.2319	1130	1,347	0.4579	40
Peacock - White Hill 345 kV	Hilltop - Peacock 230 kV	Davis - Mc Connico 230 kV	0.5283	-0.2319	1130	1,495	0.4999	73
Peacock - White Hill 345 kV	Liberty - Westwing 230 kV	Davis - Mc Connico 230 kV	0.5283	0.0296	1130	1,470	0.5004	68
Peacock - White Hill 345 kV	Mead S - Mead N No.1 230 kV	Davis - Mc Connico 230 kV	0.5283	0.0011	1130	1,446	0.3653	46
Peacock - White Hill 345 kV	Mead S - Mead N No.2 230 kV	Davis - Mc Connico 230 kV	0.5283	0.0011	1130	1,540	0.5797	95
Peacock - White Hill 345 kV	N.Havasu - Topock 230 kV	Davis - Mc Connico 230 kV	0.5283	-0.1242	1130	1,475	0.5402	74
Peacock - White Hill 345 kV	S.Point - Topock No.1 230 kV	Davis - Mc Connico 230 kV	0.5283	0.0000	1130	1,428	0.5402	64
Peacock - White Hill 345 kV	S.Point - Topock No.2 230 kV	Davis - Mc Connico 230 kV	0.5283	0.0000	1130	1,494	0.5080	74
Peacock - White Hill 345 kV	Topock - ZORB 230 kV	Davis - Mc Connico 230 kV	0.5283	0.0745	1130	1,492	0.5057	73
REVERSE ELEMENT OUTAGE								
Black Mesa - Topock 230 kV	Peacock - White Hill 345 kV	Davis - Mc Connico 230 kV	-0.1459	0.5148	1130	1,427	0.4956	59
Black Mesa - Topock 230 kV	Mead 345/230 kV Xfmr	Davis - Mc Connico 230 kV	-0.1459	0.5148	1130	1,427	0.4956	59
Davis - Mc Connico 230 kV	Griffith - Peacock 230 kV	Hilltop - Mc Connico 230 kV	0.5251	1.0000	1130	1,698	1.0000	226
Davis - Mc Connico 230 kV	Mead 345/230 kV Xfmr	Round Valley - Peacock 230 kV	0.2122	0.4008	816	891	0.3411	10
Davis - Mc Connico 230 kV	Peacock - White Hill 345 kV	Round Valley - Peacock 230 kV	0.2122	0.4008	816	891	0.3411	10
Davis - Mc Connico 230 kV	Peacock 345/230 kV Xfmr	Prescott - Yavapai 230 kV	0.1524	0.6876	670	893	0.7120	63
Davis - Mc Connico 230 kV	Peacock 345/230 kV Xfmr	Round Valley - Peacock 230 kV	0.2122	1.0000	816	1,454	1.0000	254
Davis - Mc Connico 230 kV	Peacock 345/230 kV Xfmr	Round Valley - Prescott 230 kV	0.2122	1.0000	816	1,454	1.0000	254
Davis - Mc Cullough 230 kV	Mead 345/230 kV Xfmr	Davis - Mc Connico 230 kV	-0.3162	0.4726	1130	1,338	0.4569	38
Davis - Mc Cullough 230 kV	Peacock - White Hill 345 kV	Davis - Mc Connico 230 kV	-0.3162	0.4726	1130	1,338	0.4569	38
Davis - Mead N 230 kV	Mead 345/230 kV Xfmr	Davis - Mc Connico 230 kV	-0.3235	0.4605	1130	1,347	0.4579	40
Davis - Mead N 230 kV	Peacock - White Hill 345 kV	Davis - Mc Connico 230 kV	-0.3235	0.4605	1130	1,347	0.4579	40
Davis - Topock No.2 230 kV	Mead 345/230 kV Xfmr	Davis - Mc Connico 230 kV	0.0856	0.5198	1130	1,491	0.4999	72
Davis - Topock No.2 230 kV	Peacock - White Hill 345 kV	Davis - Mc Connico 230 kV	0.0856	0.5198	1130	1,491	0.4999	72
Davis - ZORB 230 kV	Mead 345/230 kV Xfmr	Davis - Mc Connico 230 kV	-0.0821	0.5203	1130	1,473	0.5004	68

Table F-1. (continued) 2008 Heavy Autumn – Liberty PST In-Service at 450 MW (s2n).

Contingency1	Contingency2	AFFECTED ELEMENT	Contingency1 %LODF	Contingency2 %LODF	Emergency Rating (amps)	Calc Max Post-contingency Loading (amps)	Gen Shift Factor	Gen Reduction Rqmt (MW)
Davis - ZORB 230 kV	Peacock - White Hill 345 kV	Davis - Mc Connico 230 kV	-0.0821	0.5203	1130	1,473	0.5004	68
Griffith - Mc Connico 230 kV	Mead 345/230 kV Xfmr	Hilltop - Peacock 230 kV	0.7512	0.4719	1130	1,452	0.3653	47
Griffith - Mc Connico 230 kV	Peacock - White Hill 345 kV	Hilltop - Peacock 230 kV	0.7512	0.4719	1130	1,452	0.3653	47
Griffith - Mc Connico 230 kV	Peacock 345/230 kV Xfmr	Hilltop - Peacock 230 kV	0.7512	0.6174	1130	1,284	0.6186	38
Griffith - Peacock 230 kV	Mead 345/230 kV Xfmr	Davis - Mc Connico 230 kV	0.2488	0.4719	1130	1,537	0.5797	94
Griffith - Peacock 230 kV	Peacock - White Hill 345 kV	Davis - Mc Connico 230 kV	0.2488	0.4719	1130	1,537	0.5797	94
Hilltop - Mc Connico 230 kV	Griffith - Peacock 230 kV	Davis - Mc Connico 230 kV	-0.2681	1.0000	1130	1,676	1.0000	217
Hilltop - Mc Connico 230 kV	Mead 345/230 kV Xfmr	Davis - Mc Connico 230 kV	-0.2681	0.4613	1130	1,493	0.5402	78
Hilltop - Mc Connico 230 kV	Peacock - White Hill 345 kV	Davis - Mc Connico 230 kV	-0.2681	0.4613	1130	1,493	0.5402	78
Hilltop - Peacock 230 kV	Griffith - Peacock 230 kV	Davis - Mc Connico 230 kV	-0.2681	1.0000	1130	1,426	1.0000	118
Hilltop - Peacock 230 kV	Mead 345/230 kV Xfmr	Davis - Mc Connico 230 kV	-0.2681	0.4613	1130	1,436	0.5402	66
Hilltop - Peacock 230 kV	Peacock - White Hill 345 kV	Davis - Mc Connico 230 kV	-0.2681	0.4613	1130	1,436	0.5402	66
Liberty - Westwing 230 kV	Mead 345/230 kV Xfmr	Davis - Mc Connico 230 kV	0.0130	0.5296	1130	1,493	0.5080	74
Liberty - Westwing 230 kV	Peacock - White Hill 345 kV	Davis - Mc Connico 230 kV	0.0130	0.5296	1130	1,493	0.5080	74
Mead 345/230 kV Xfmr	-	Davis - Mc Connico 230 kV	0.5283	-	1130	1,501	0.5057	75
Mead S - Mead N No.1 230 kV	Mead 345/230 kV Xfmr	Davis - Mc Connico 230 kV	0.0073	0.5248	1130	1,494	0.5057	73
Mead S - Mead N No.1 230 kV	Peacock - White Hill 345 kV	Davis - Mc Connico 230 kV	0.0073	0.5248	1130	1,494	0.5057	73
Mead S - Mead N No.2 230 kV	Mead 345/230 kV Xfmr	Davis - Mc Connico 230 kV	0.0073	0.5248	1130	1,494	0.5057	73
Mead S - Mead N No.2 230 kV	Peacock - White Hill 345 kV	Davis - Mc Connico 230 kV	0.0073	0.5248	1130	1,494	0.5057	73
N.Havasu - Topock 230 kV	Mead 345/230 kV Xfmr	Davis - Mc Connico 230 kV	-0.1367	0.5159	1130	1,434	0.4972	60
N.Havasu - Topock 230 kV	Peacock - White Hill 345 kV	Davis - Mc Connico 230 kV	-0.1367	0.5159	1130	1,434	0.4972	60
Peacock - Mead 345 kV	-	Davis - Mc Connico 230 kV	0.5283	-	1130	1,501	0.5057	75
South Point - Topock No.1 230 kV	Mead 345/230 kV Xfmr	Davis - Mc Connico 230 kV	0.0000	0.5239	1130	1,494	0.5057	73
South Point - Topock No.1 230 kV	Peacock - White Hill 345 kV	Davis - Mc Connico 230 kV	0.0000	0.5239	1130	1,494	0.5057	73
South Point - Topock No.2 230 kV	Mead 345/230 kV Xfmr	Davis - Mc Connico 230 kV	0.0000	0.5239	1130	1,494	0.5057	73
South Point - Topock No.2 230 kV	Peacock - White Hill 345 kV	Davis - Mc Connico 230 kV	0.0000	0.5239	1130	1,494	0.5057	73
South Point - Topock No.2 230 kV	South Point - Topock No.1 230 kV	Davis - Mc Connico 230 kV	0.0000	0.1886	1130	1,250	0.4137	20
Topock - ZORB 230 kV	Mead 345/230 kV Xfmr	Davis - Mc Connico 230 kV	0.0821	0.5208	1130	1,500	0.5004	74
Topock - ZORB 230 kV	Peacock - White Hill 345 kV	Davis - Mc Connico 230 kV	0.0821	0.5208	1130	1,500	0.5004	74

Table F-2. 2008 Heavy Autumn – Liberty PST By-Passed.

Contingency1	Contingency2	AFFECTED ELEMENT	Contingency1 %LODF	Contingency2 %LODF	Normal Rating (amps)	Calc Max Post-contingency Loading (amps)	Gen Shift Factor	Gen Reduction Rqmt (MW)
Griffith - Peacock 230 kV	Hilltop - Mc Connico 230 kV	Davis - Mc Connico 230 kV	0.2520	1.0000	1130	1,675	1.0000	217
Griffith - Peacock 230 kV	Hilltop - Peacock 230 kV	Davis - Mc Connico 230 kV	0.2520	1.0000	1130	1,430	1.0000	120
Griffith - Peacock 230 kV	Davis - Mc Connico 230 kV	Hilltop - Mc Connico 230 kV	0.7480	1.0000	1130	1,675	1.0000	217
Griffith - Peacock 230 kV	Davis - Mc Connico 230 kV	Hilltop - Peacock 230 kV	0.7480	1.0000	1130	1,430	1.0000	120
Peacock 345/230 kV Xfmr	Griffith - Mc Connico 230 kV	Hilltop - Peacock 230 kV	0.3447	0.8722	1130	1,288	0.6186	39
Peacock 345/230 kV Xfmr	Davis - Mc Connico 230 kV	Round Valley - Peacock 230 kV	0.3436	1.0000	816	1,425	1.0000	242
Peacock 345/230 kV Xfmr	Davis - Mc Connico 230 kV	Round Valley - Prescott 230 kV	0.3436	1.0000	816	1,387	1.0000	227
Peacock 345/230 kV Xfmr	Davis - Mc Connico 230 kV	Prescott - Yavapai 230 kV	0.2354	0.7012	670	998	0.7120	93
REVERSE ELEMENT OUTAGE								
Davis - Mc Connico 230 kV	Griffith - Peacock 230 kV	Hilltop - Mc Connico 230 kV	0.5251	1.0000	1130	1,686	1.0000	221
Davis - Mc Connico 230 kV	Griffith - Peacock 230 kV	Hilltop - Peacock 230 kV	0.5251	1.0000	1130	1,435	1.0000	122
Davis - Mc Connico 230 kV	Peacock 345/230 kV Xfmr	Round Valley - Peacock 230 kV	0.2007	1.0000	816	1,439	1.0000	248
Davis - Mc Connico 230 kV	Peacock 345/230 kV Xfmr	Round Valley - Prescott 230 kV	0.2007	1.0000	816	1,397	1.0000	231
Davis - Mc Connico 230 kV	Peacock 345/230 kV Xfmr	Prescott - Yavapai 230 kV	0.1451	0.6957	670	1,002	0.7120	94
Griffith - Mc Connico 230 kV	Peacock 345/230 kV Xfmr	Hilltop - Peacock 230 kV	0.7480	0.6166	1130	1,563	0.6186	107
Hilltop - Mc Connico 230 kV	Griffith - Peacock 230 kV	Davis - Mc Connico 230 kV	0.2714	1.0000	1130	1,675	1.0000	217
Hilltop - Peacock 230 kV	Griffith - Peacock 230 kV	Davis - Mc Connico 230 kV	0.2714	1.0000	1130	1,428	1.0000	119

Arizona Corporation Commission
DOCKETED

DEC 1 6 1998

DOCKETED BY

BEFORE THE ARIZONA POWER PLANT AND
TRANSMISSION LINE SITING COMMITTEE

In the matter of the Application of **Griffith Energy LLC** in conformance with the requirements of Arizona Revised Statutes 40-360.03 and 40-360.06 for a Certificate of Environmental Compatibility authorizing construction of a natural gas-fired, combined cycle generating facility in Mohave County, Arizona, southwest of Kingman, Arizona, a distance of about 9 miles.

CASE NO. 90
DOCKET NO. L-00000H-98-0090

DECISION NO. 61295

CERTIFICATE OF ENVIRONMENTAL COMPATIBILITY

Pursuant to notice given as provided by law, the Arizona Power Plant and Transmission Line Siting Committee (the "Committee") held a public hearing in the Mohave County Board of Supervisors Facilities, 809 E. Beale Street, Kingman, Arizona, on September 14, 1998, in conformance with the requirements of Arizona Revised Statutes § 40-360, *et seq.*, for the purpose of receiving evidence and deliberating on the Application of Griffith Energy LLC ("Griffith") for a Certificate of Environmental Compatibility in the above-captioned case.

The following members and designees of members of the Committee were present for the deliberations and vote on the Application at the September 14, 1998, hearing:

Charles S. Pierson	Chairman, Designee for Arizona Attorney General Grant Woods
Steve Olea	Arizona Corporation Commission
Dennis Sundie	Arizona Department of Water Resources
Doug Sawyer	Arizona Department of Environmental Quality
Jeff Maguire	Appointed Member
Arlo Lee	Appointed Member

The Applicant was represented by Jay Moyes of Meyer, Hendricks, Bivens & Moyes, P.A., Attorneys for Griffith. There was one intervenor, Robert K. Holsinger. Sixty letters of

ALL-STATE LEGAL®
EXHIBIT
S-6
admitted

support for the Project and two letters opposing the Project were received and have been placed in the docket.

At the conclusion of the hearing, the Committee, having received the Application, the appearance of Griffith, the evidence, testimony and exhibits presented by Griffith, and the testimony and evidence presented by the intervenor, and being advised of the legal requirements of Arizona Revised Statutes § § 40-360 to 40-360.13, upon motion duly made and seconded, voted unanimously to grant Griffith the following Certificate of Environmental Compatibility (Case No. 90):

Griffith Energy LLC is hereby granted a Certificate of Environmental Compatibility authorizing construction of a baseload 520 megawatt (MW) [650 MW peaking] natural gas-fired, combined cycle generating facility, together with the necessary and related infrastructure and appurtenances, such as roadways, gas and water pipelines, storage tanks, transmission interconnection switchyard, storm water and wastewater management facilities, warehouses and other buildings, which generating facility shall be located in the SW¼ of Section 6, T. 19 N., R. 17 W., in Mohave County, Arizona.

This Certificate is granted upon the following conditions:

1. The Applicant will comply with all existing applicable air and water pollution control standards and regulations, and with all existing applicable ordinances, master plans and regulations of the State of Arizona, the County of Mohave, the United States, and any other governmental entities having jurisdiction.

2. The source of water for operation of the Project shall be a new well field to be located in only that portion of the Sacramento Valley Basin lying south of the Kingman - Oatman Road and West of Interstate 40. Any alternative long-term supply of groundwater for the Project pumped from any different location must be pre-approved by the Arizona Corporation Commission.

3. Prior to construction of the Project, the proposed well field aquifer shall be tested by means of a new well to be drilled and pump tested, using a methodology proposed by Applicant's hydro-geologic consultant and approved by the Arizona Department of Water Resources ("ADWR") in accordance with generally accepted procedures, for a duration of at least 72 hours. The test results shall be made available, within a reasonable

time, to ADWR and Mohave County as a matter of public record.

4. During the operating life of the Project, the Project's water usage and the water table at the well field shall be metered and measured at six-month or shorter intervals and reported to ADWR annually; provided, however, that water table measurement may be reduced to annually, upon approval by ADWR, if the more frequent measurements reflect a consistent trend.

5. A procedure shall be established to annually monitor and report to ADWR any reasonably measurable land surface subsidence, using methodologies pre-approved in writing by ADWR in accordance with generally accepted procedures for measuring subsidence, for so long as the Project is using material quantities of groundwater.

6. This authorization to construct the Project will expire five (5) years from the date the Certificate is approved by the Arizona Corporation Commission unless construction is completed to the point that the plant is capable of operating at its rated capacity by that time; provided, however, that prior to such expiration the Project owner may request the Arizona Corporation Commission to extend this time limitation.

GRANTED this 18th day of November, 1998.

THE ARIZONA POWER PLANT AND
TRANSMISSION LINE SITING COMMITTEE

By _____
Charles S. Pierson, Chairman

. . .

APPROVED BY ORDER OF THE ARIZONA CORPORATION COMMISSION

Chairman Commissioner Commissioner

In Witness Hereof, I, Jack Rose, Executive Secretary of the Arizona Corporation Commission, set my hand and cause the official seal of this Commission to be affixed, this 16th day of Dec, 1998.

By _____
Jack Rose
Executive Secretary

Dissent: _____

23-401823.0000
GOLDEN VALLEY 5800

Arizona Department of Water Resources
OFFICE OF ASSURED AND ADEQUATE WATER SUPPLY
500 NORTH THIRD STREET
PHOENIX, ARIZONA 85004-3921
(602) 417-2460

RECEIVED
JUL 18 2005
OFFICE OF ASSURED WATER SUPPLY

APPLICATION FOR AN ANALYSIS OF WATER ADEQUACY

(Refer to application guidelines for assistance in completing this form)

PART A - GENERAL INFORMATION

1. Name of development: Golden Valley 5800

2. Location: 20N (Township) 18W (Range) 2,3,4,8,9,10,11,14,16 (Section(s)) Mohave (County)

2. Location: 21N (Township) 18W (Range) 34 (Section(s)) Mohave (County)

3. Owner Name: AMERICAN LAND MANAGEMENT LLC Phone: 702-873-5582 Address: 4730 South Fort Apache Road, Suite 300 - Las Vegas, NV 89147

4. Water Provider: Pioneer Valley water co. or new water company (undecided) Phone: _____ Address: _____

5. Consultant Name: Errol L. Montgomery and Associates, Inc. Phone: 48-948-7747
Address: 7949 East Acome Drive, Suite 100 Scottsdale, AZ. 85260

6. Primary Contact:
Name: Greg Wallace Phone: 602-818-2399
Address: 7949 East Acome Drive, Suite 100 Scottsdale, AZ. 85260

PART B - WATER DEMAND INFORMATION

1. Include a map of the proposed development, and reference as an attachment: Attatchment 1

2. Number of lots: 32,000 Size of lots: 7500 Total Acreage: 5,800

3. Total demand projected for development: 16,000 acre-feet (AF) per year
Projected water demand per residential lot: .58 gallons per day
Non-Residential demands: Golf course: 600 AF/year Parks: 230 AF/year Lakes: _____ AF/year
Other (specify): _____ _____ AF/year

4. Expected year of completion (build-out): 2015

AAWA 7/7/97
ALL-STATE LEGAL®
EXHIBIT
S-7
admitted

PART C- WATER SUPPLY INFORMATION

1. Please indicate source(s) of water to be used: X Groundwater __ Surface Water __ Effluent
(If the sources includes non-groundwater supplies, please complete "Supplement C.")

2. Provide a hydrologic study, and reference the attachment: #5

3. a. Method of water distribution: X central distribution system ___ dry lot subdivision (individual wells)

   b. If water is to be obtained from a water provider, include a "Notice of Intent to Serve" agreement and reference the attachment: _____

4. If any wells proposed to serve the development are within one mile of a Water Quality Assurance Revolving Fund or Superfund site (or any monitor wells associated with the site), or if the proposed water supply fails to meet safe drinking water quality standards, provide a study identifying and describing this water and reference the attachment: N/A

5. If a "Letter of Water Availability" has previously been issued for this provide a copy of the document and reference the attachment: n/a

PART D - FEES

The application fee for an Analysis of Water Adequacy is $ 1,000. The payment may be made by cash, check, or in some cases, by entry in an existing Department fee credit account. Checks should be made payable to the Department of Water Resources. **Failure to enclose the required fees will cause the application to be returned.**

Fee for Application for Analysis of Water Adequacy: $ 1000.00

I DO HEREBY certify that the information contained in this application and all information accompanying it is true and correct to the best of my knowledge and belief.

Charles Sakuma	Charles Sa C	6/9/05
Owner Name (Please type or print)	Signature	Date

LEGAL

BEFORE THE ARIZONA POWER PLANT

AND TRANSMISSION LINE SITING COMMITTEE

RECEIVED

2007 OCT -3 P 4:31

AZ CORP COMMISSION
DOCKET CONTROL

IN THE MATTER OF THE APPLICATION OF NORTHEN ARIZONA ENERGY, LLC FOR A CERTIFICATE OF CONVENIENCE AND NECESSITY AUTHORIZING CONSTRUCTION OF A 175 MW NATURAL GAS-FIRED SIMPLE CYCLE GENERATING FACILITY AND ASSOCIATED TRANSMISSION LINE TO THE WESTERN AREA POWER ADMINISTRATION ("WAPA") GRIFFITH SWITCHYARD.	CASE NO. 133 DOCKET NO. L-00000FF-07-0134-00133 **NOTICE OF FILING STAFF'S CERTIFICATE OF ENVIRONMENTAL COMPATIBILITY**

Staff of the Arizona Corporation Commission ("Staff") hereby files its draft CEC. The Staff and Applicant were unable to come to agreement on the provisions of the draft CEC before docketing today. However, the Staff and Applicant will continue to work on reaching agreement on the conditions of the proposed CEC before the hearing on October 15, 2007.

RESPECTFULLY SUBMITTED this 3rd day of October 2007.

Maureen A. Scott, Senior Staff Counsel
Legal Division
Arizona Corporation Commission
1200 West Washington Street
Phoenix, Arizona 85007
(602) 542-3402

RECEIVED

OCT 0 4 2007

LEGAL DIV.
ARIZ. CORPORATION COMMISSION

Original and Twenty-Eight (28) copies of the foregoing filed this 3rd day of October 2007 with:

Docket Control
Arizona Corporation Commission
1200 West Washington Street
Phoenix, Arizona 85007

EXHIBIT
S-8
Admitted

Copy of the foregoing mailed
this 3rd day of October 2007 to:

Greystone Arcadis
630 Plaza Drive
Highlands Ranch, Colorado 80129

Copies of the foregoing e-mailed
this 3rd day of October 2007 to:

Laurie Woodall, Chairman
Arizona Power Plant & Transmission
Line Siting Committee
1275 West Washington
Phoenix, Arizona 85007
Laurie.Woodall@azag.gov

Jay I. Moyes
Moyes Storey
Viad Corporate Center
1850 North Central Avenue
Suite 1100
Phoenix, Arizona 85004
jimoyes@lawms.com

Kenneth C. Sundlof, Jr.
Jennings, Strouss & Salmon, PLC
The Collier Center, 11th Floor
201 East Washington Street
Phoenix, Arizona 85004-2385
Sundlof@sslaw.com

Jack Ehrhardt
4105 N. Adams St.
Kingman, Arizona 86409
hualapaiplanning@citlink.net
cerbatnp@citlink.net

Monica A. Martinez

BEFORE THE ARIZONA POWER PLANT AND TRANSMISSION LINE SITING COMMITTEE

IN THE MATTER OF THE APPLICATION OF **NORTHERN ARIZONA ENERGY, LLC**, IN CONFORMANCE WITH THE REQUIREMENTS OF ARZIONA REVISED STATUTES 40-360.03 AND 40-360.06, FOR A CERTIFICATE OF ENVIRONMENTAL COMPATABILITY AUTHORIZING CONSTRUCTION OF A 175 MW NATURAL GAS-FIRED, SIMPLE CYCLE GENERATING FACILITY AND ASSOCIATED TRANSMISSION LINE INTERCONNECTING THE GENERATING FACILITY TO THE ADJACENT WESTERN AREA POWER ADMINISTRATION GRIFFITH SWITCHYARD, ALL LOCATED IN MOHAVE COUNTY, APPROXIMATELY 9 MILES SOUTHWEST OF KINGMAN, ARIZONA	Case No. L-00000FF-07-0134-00133 Decision No. _____

DECISION OF THE ARIZONA POWER PLANT AND TRANSMISSION LINE SITING COMMITTEE AND CERTIFICATE OF ENVIRONMENTAL COMPATIBILITY

Pursuant to notice given as provided by law, the Arizona Power Plant and Transmission Line Siting Committee ("Committee") held public hearings at The Hampton Inn, Kingman, Arizona, May 1 and 2, 2007, and at the Best Western Executive Suites, Phoenix, Arizona, on September 17 and 18, and October 15, 2007, in conformance with the requirements of Arizona Revised Statutes Section 40-360, *et seq.*, for the purpose of receiving public comment and evidence and deliberating on the Application of Northern Arizona Energy Project ("NAEP") by Northern Arizona Energy, LLC ("Applicant") for a Certificate of Environmental Compatibility ("Certificate") in the above-captioned case.

The following members or designees of members of the Committee were present for some or all of the hearings on the Application:

Laurie A. Woodall	Chairman, Designee for the Arizona Attorney General.
Paul W. Rasmussen	Designee for the Director of the Arizona Department of Environmental Quality
David Eberhart	Designee for the Arizona Corporation Commission
Jack Haenichen	Appointed Member, Energy Office, Arizona Department of Commerce

Jeff Maguire	Appointed Member, Agriculture
A. Wayne Smith	Appointed Member
Mike Whalen	Appointed Member, Cities
Mike Palmer	Appointed Member
Barry Wong	Appointed Member
Gregg Houtz	Designee for the Director of the Arizona Department of Water Resources
Joy Rich	Appointed Member, Counties

Jay Moyes of Moyes Storey Ltd. represented Applicant. Staff of the Arizona Corporation Commission ("Staff") noticed their intervention as a party, and was represented by Maureen Scott, Esq. Mohave County was granted intervener status and was represented by Kenneth C. Sundlof, Jr., Esq. of Jennings Strouss & Salmon, P.L.C. Mr. Jack Ehrhardt was granted intervention in his individual capacity. Applicant, Staff, Mohave County, and Mr. Ehrhardt presented testimony and exhibits during the hearings. Several persons presented public comments on the record. There were no other interventions or limited appearances.

At the conclusion of the hearings and deliberations, the Committee, (i) having received and considered the Application, the appearances of Applicant and each of the interveners; the evidence, testimony and exhibits presented by Applicant and the interveners, respectively; and the public comments; (ii) being advised of the legal requirements of Arizona Revised Statutes Sections 40-360 to 40-360.13; (iii) upon consideration of the factors identified in Arizona Revised Statutes Section 40-360.06; and (iv) in accordance with A.A.C. R14-3-213, upon motion duly made and seconded, voted to make the following findings and to grant Applicant the following Certificate of Environmental Compatibility:

The Committee finds that there is a need for an adequate, economical and reliable supply of electric power within the Western Electricity Coordinating Council (WECC) and the State of Arizona, and that Applicant's proposed Northern Arizona Energy Project would contribute towards satisfaction of such need without causing material adverse impact to the environment, as mitigated by compliance with the conditions attached to the issuance of the CEC.

Northern Arizona Energy, LLC, and its assignee(s), are hereby granted this Certificate of Environmental Compatibility authorizing construction of a nominal 175 MW natural gas-fired, simple cycle generating facility and associated transmission line interconnecting the generating facility to the adjacent Western Area Power Administration Griffith Switchyard (collectively the "Project"). The Project shall comprise no more than four (4) individual simple-cycle natural gas combustion turbine generator units, each having a nominal capacity of approximately 45 MW. As depicted on the attached Exhibit A, the Project shall be constructed wholly within the perimeter of the existing Griffith Energy project site, legally described as the Southwest Quarter of Section 6, Township 19 North, Range 17 West, Gila & Salt River Base & Meridian, Mohave County, Arizona, comprising approximately one hundred sixty (160) acres (the "160 Perimeter"). The Project generators and step-up transformers will be located within the North seven hundred (700) feet of the North One-half of the above-described parcel. The transmission line components of the Project will be constructed wholly within the 160 Perimeter so as to interconnect the Project generators to the existing Griffith Switchyard owned by Western Area Power Administration ("Western"), also located wholly within the 160 Perimeter, in a reasonably direct route to be determined by Western and Applicant taking into account appropriate clearances from other existing transmission facilities within the 160 Perimeter, and the most feasible point of access into, and the necessary minor expansion of the existing Griffith Switchyard as required to complete the interconnection. The transmission line shall not exceed approximately 3,000 feet in total length, and shall be constructed using tubular steel monopole tower structures of the type depicted on the attached Exhibit B, approximately 100 -120 feet in height, in total numbers and spacing to be determined in accordance with applicable Western interconnection standards and applicable safety and reliability standards.

This Certificate is granted upon the following conditions:

1. This authorization to construct the Project will expire five (5) years from the date this Certificate is approved by the Arizona Corporation Commission ("Commission") unless substantial construction activities have commenced; provided, however, that prior to such expiration Applicant or its assignee may request that the Commission extend this time limitation.

2. The Applicant will comply with all existing applicable air and water pollution control standards and regulations, and with all existing applicable ordinances, master plans and regulations of the State of Arizona, Mohave County, the United States, and any other governmental entities having jurisdiction, including but not limited to the following:

   a. all applicable land use regulations;

   b. all applicable zoning stipulations and conditions, including but not limited to landscaping and dust control requirements;

   c. all applicable air quality control standards and regulations, and permit conditions of the Arizona Department of Environmental Quality and/or Federal agencies having jurisdiction; and the Applicant shall install and operate selective catalytic reduction and oxidation catalyst emission control technologies on each of the four (4) Project units;

   d. all applicable water use, discharge and/or disposal requirements of the Arizona Department of Water Resources and the Arizona Department of Environmental Quality;

   e. all applicable noise control standards;

   f. all applicable regulations and permits governing storage and handling of chemicals and petroleum products;

   g. all other applicable federal and state regulations and standards.

3. Notwithstanding any conditions above, the NAEP project shall be required to meet the Lowest Achievable Emission Rate ("LAER") for Carbon Monoxide, Nitrogen Oxides, volatile Organic Compounds, and Particulate Matter less than ten microns in aerodynamic diameter (PM_{10}). The Applicant shall be required to submit an air quality permit application requesting this LAER to the Mohave County Environmental Services Department. LAER shall be determined by the Mohave County Environmental Services Department.

4. Applicant has provided to the Commission a copy of the System Impact Study performed by Western Area Power Administration ("Western"), which Commission Staff has analyzed. Applicant will also provide to the Commission copies of (i) the Facility Study Agreement

with Western and (ii) the Facility Study produced by Western, as soon as they are available but no later than 90 days prior to commercial operation of the Project.

5. Applicant will also provide to the Commission copies of the Project's executed interconnection agreement with Western, and the technical operating studies which will be performed by Western prior to actual physical interconnection of the Project to the Western transmission system.

6. Applicant will comply fully with all requirements of Western to interconnect the Project with the Western transmission system and to ensure compliance with all applicable WECC/NERC standards, without the implementation of an automated RAS to mitigate any N-1 contingencies. However, Applicant may rely upon a RAS to mitigate impacts of an outage of either (i) the Peacock – Mead 345 kV line or (ii) the Mead 345/230 kV transformer, coincident with an extremely low probability of operation of the Liberty Phase Shifter moving 450 MW (maximum) power in the Northbound direction. Staff does not consider this a variance from our standards because of the remoteness of the possibility of occurrence of the Liberty Phase Shifter operation at its maximum limit coincident with either of the two N-1 contingencies.

7. If Applicant enters into a control area services agreement with a third-party provider, Applicant will file with the Commission a copy of such agreement.

8. Applicant will not set any combustion turbine on its foundation until a Finding of No Significant Impact (FONSI) has been issued by Western (or, if an Environmental Impact Statement is required for the Project, a Federal Record of Decision has been issued) approving construction of the transmission facilities interconnecting the Project to Western's transmission system.

9. The Applicant will not operate the Project combustion turbine generator units more than 20,000 aggregate unit-hours per calendar year.

10. Applicant or its affiliate company will become a member of the Western Electricity Coordinating Council ("WECC") (or its successor), and will file with the Commission a copy of its executed WECC Reliability Management System ("RMS") Agreement.

11. In the event that the Griffith Energy project permanently ceases operation, Applicant, its successor(s) or assignee(s) shall comply with the requirement in Griffith Energy's CEC to measure and monitor (i) the Project's annual water use, (ii) annual changes in the groundwater table at the well field from which water is pumped for use by the Project, and (ii) annual changes in elevation of the existing soil subsidence monitoring monument near such well field, and to report all such information annually to the Arizona Department of Water Resources and Mohave County.

12. Applicant, its affiliates, successors and assignees may withdraw groundwater for electrical generation and related uses, as was determined in its agreement with Griffith Energy and according to the following conditions approved in Decision No. 61295:

> (i) The source of water for operation of the Project shall be a new well field to be located in only that portion of the Sacramento Valley Basin lying south of the Kingman – Oatman Road and West of Interstate 40. Any alternative long-term supply of groundwater for the Project pumped from any different location must be pre-approved by the Arizona Corporation Commission.
>
> (ii) During the operating life of the Project, the Project's water usage and the water table at the well field shall be metered and measured at six-month or shorter intervals and reported to ADWR annually; provided, however, that water table measurement may be reduced to annually, upon approval by ADWR, if the more frequent measurements reflect a consistent trend.
>
> (iii) A procedure shall be established to annually monitor and report to ADWR any reasonably measurable land surface subsidence, using methodologies pre-approved in writing by ADWR in accordance with generally accepted procedures for measuring subsidence, for so long as the Project is using material quantities of groundwater.

Additionally, when the NAEP facility first begins withdrawing groundwater in connection with the Project, Applicant's withdrawal in any given year shall not exceed 270 acre-feet.

13. Applicant will, in good faith upon reasonable notice, participate in a Commission sponsored workshop or other forum addressing the regional natural gas infrastructure and market.

...

14. Applicant shall pursue all necessary commercially reasonable steps to ensure a reliable supply and delivery of natural gas for the Project.

15. Subject to applicable Federal Energy Regulatory Commission regulations, Applicant or its power marketing affiliates will make commercially reasonable good faith efforts in the ordinary course of business to market wholesale power from the Project directly or indirectly to credit worthy utilities that serve Arizona loads; however, this condition shall not constitute any restraint against, nor shall it in any manner restrict, marketing efforts to or transactions with any other potential purchaser(s) of power from the Project.

16. In connection with the construction of the Project, Applicant shall use commercially reasonable efforts, where feasible, to give due consideration to use of qualified Arizona contractors.

17. Applicant shall prepare a plan for shutdown, decommissioning and cleanup of the plant site which shall be filed with the Commission's Docket Control section within one year of beginning construction. In that regard, the Committee recommends that Applicant work with Mohave County and/or any other local governing body with jurisdiction over the plant site to ensure that such plan is reasonable, and is followed or amended as needed.

18. Applicant shall participate in good faith in state and regional transmission study forums, such as Southwest Area Transmission Planning Group ("SWAT") and Central Arizona Transmission Study Group ("CATS") to identify and encourage expedient implementation of transmission enhancements, including transmission cost participation as appropriate, to reliably deliver power from the Project to its Regional Western grid in a reliable manner.

19. Within 30 days of the Commission decision authorizing construction of the Project, Applicant shall erect and maintain at the site a sign of not less than 4 feet by 8 feet dimensions, advising:

    A. that the site has been approved for the construction of an 175 megawatt generating facility;

    B. the expected date of completion of the Project; and

    C. phone number for public information regarding the Project.

20. In the event that Applicant requests and extension of the term of the Certificate prior to completion of the construction, Applicant shall use reasonable means to directly notify all landowners and residents within one-mile radius of the Project of the time and place of the proceeding in which the Commission shall consider such request for extension. Applicant shall also provide notice of such extension to the community of Kingman and Mohave County.

21. Applicants, its successor(s) or assignee(s) shall submit a self-certification letter annually, identifying which conditions contained in the CEC as amended, have been met. Each letter shall be submitted to the Utilities Division Director on August 1, beginning in 2008, describing conditions which have been met as of June 1. Attached to each certification letter shall be documentation explaining, in detail, how compliance with each condition was achieved. Copies of each letter, along with the corresponding documentation, shall also be submitted to the Arizona Attorney General and the Directors of the Arizona Department of Environmental Quality, Department of Water Resources, and Commerce Energy Office.

22. Before construction on this Project may commence, Applicant must file a construction mitigation and restoration plan with ACC Docket Control. Applicants shall, within one year of completion of the Project, rehabilitate to its original state any area disturbed by construction of the Project, except for any road that may be necessary to access the transmission lines for maintenance and repair.

The goals of the Plan will be to:

- Avoid impacts where practical;
- Where impacts are unavoidable minimize impacts; and
- Focus on site preparation to facilitate natural processes of revegetation.

Other key elements of the Plan are to:

- Emphasize final site preparation to encourage natural revegetation;
- Avoid (i.e., preserve), where practical, mature native trees;
- Stipulate a maximum construction corridor width;

- Reserve topsoil and native plant materials from right-of-way before grading, and respread over the right-of-way after construction is complete;
- Imprint the restored right-of-way to provide indentations to catch seed and water;
- Implement best management practices to protect the soil;
- Apply restoration methods that have been shown to work in the desert environment;
- Prevent the spread of noxious weed or other undesirable species; and
- Apply methods to discourage unauthorized off-highway-vehicle (OHV) use of right-of-way.

23. Applicant shall retain a qualified biologist to monitor all ground clearing/disturbing construction activities. The biological monitor will be responsible for ensuring proper actions are taken if a special status species is encountered.

24. Applicant shall salvage mesquite, ironwood, saguaro and palo verde trees removed during project construction activities consistent with Arizona's Native Plant Law and use the vegetation for reclamation in or near its original location.

25. Should cultural features and/or deposits be encountered during ground disturbing activities, Applicant shall comply with A.R.S. § 41-844, which requires that work cease in the immediate area of the discovery and that the Director of the Arizona State Museum be notified promptly.

26. If human remains or funerary objects are encountered during the course of any ground disturbing activities related to the development of the subject property, Applicant shall cease work and notify the Director of the Arizona State Museum in accordance with A.R.S. § 41-865.

...

...

...

...

...

27. If the Applicant, its successor(s) or assignee(s) after notice and hearing, is found to have failed to comply with any conditions herein, the Commission shall impose appropriate sanctions up to and including the revocation of the authority to construct facilities granted by the Commission decision, which would result in the CEC being rendered null and void in its entirety.

GRANTED this 15th day of October, 2007.

ARIZONA POWER PLANT AND
TRANSMISSION LINE SITING COMMITTEE

By _____
Laurie A. Woodall, Chairman

LEGAL

RECEIVED

2007 OCT -4 P 3:50

AZ CORP COMMISSION
DOCKET CONTROL

BEFORE THE ARIZONA POWER PLANT

AND TRANSMISSION LINE SITING COMMITTEE

IN THE MATTER OF THE APPLICATION OF NORTHEN ARIZONA ENERGY, LLC FOR A CERTIFICATE OF CONVENIENCE AND NECESSITY AUTHORIZING CONSTRUCTION OF A 175 MW NATURAL GAS-FIRED SIMPLE CYCLE GENERATING FACILITY AND ASSOCIATED TRANSMISSION LINE TO THE WESTERN AREA POWER ADMINISTRATION ("WAPA") GRIFFITH SWITCHYARD.	CASE NO. 133 DOCKET NO. L-00000FF-07-0134-00133 **NOTICE OF FILING ERRATA**

Staff of the Arizona Corporation Commission hereby files an Errata to Page 6, Paragraph 12 of the draft CEC, which was filed on October 3, 2007, to reflect the new agreements with Mohave County.

RESPECTFULLY SUBMITTED this 4th day of October 2007.

Maureen A. Scott, Senior Staff Counsel
Legal Division
Arizona Corporation Commission
1200 West Washington Street
Phoenix, Arizona 85007
(602) 542-3402

Original and Twenty-Eight (28) copies of the foregoing filed this 4th day of October 2007 with:

Docket Control
Arizona Corporation Commission
1200 West Washington Street
Phoenix, Arizona 85007

RECEIVED

OCT 0 4 2007

LEGAL DIV.
ARIZ. CORPORATION COMMISSION

Copy of the foregoing mailed this 4th day of October 2007 to:

Greystone Arcadis
630 Plaza Drive
Highlands Ranch, Colorado 80129

...

Copies of the foregoing e-mailed
this 4th day of October 2007 to:

Laurie Woodall, Chairman
Arizona Power Plant & Transmission
Line Siting Committee
1275 West Washington
Phoenix, Arizona 85007
Laurie.Woodall@azag.gov

Jay I. Moyes
Moyes Storey
Viad Corporate Center
1850 North Central Avenue
Suite 1100
Phoenix, Arizona 85004
jimoyes@lawms.com

Kenneth C. Sundlof, Jr.
Jennings, Strouss & Salmon, PLC
The Collier Center, 11th Floor
201 East Washington Street
Phoenix, Arizona 85004-2385
Sundlof@sslaw.com

Jack Ehrhardt
4105 N. Adams St.
Kingman, Arizona 86409
hualapaiplanning@citlink.net
cerbatnp@citlink.net

Monica A. Martinez

11. In the event that the Griffith Energy project permanently ceases operation, Applicant, its successor(s) or assignee(s) shall comply with the requirement in Griffith Energy's CEC to measure and monitor (i) the Project's annual water use, (ii) annual changes in the groundwater table at the well field from which water is pumped for use by the Project, and (ii) annual changes in elevation of the existing soil subsidence monitoring monument near such well field, and to report all such information annually to the Arizona Department of Water Resources and Mohave County.

12. Applicant, its affiliates, successors and assignees may withdraw groundwater for electrical generation and related uses, as was determined in the revised and restated agreement between Mohave County and Griffith Energy and in NAEP's recent agreement with Mohave County and according to the following conditions approved in Decision No. 61295:

> (i) The source of water for operation of the Project shall be a new well field to be located in only that portion of the Sacramento Valley Basin lying south of the Kingman – Oatman Road and West of Interstate 40. Any alternative long-term supply of groundwater for the Project pumped from any different location must be pre-approved by the Arizona Corporation Commission.
>
> (ii) During the operating life of the Project, the Project's water usage and the water table at the well field shall be metered and measured at six-month or shorter intervals and reported to ADWR annually; provided, however, that water table measurement may be reduced to annually, upon approval by ADWR, if the more frequent measurements reflect a consistent trend.
>
> (iii) A procedure shall be established to annually monitor and report to ADWR any reasonably measurable land surface subsidence, using methodologies pre-approved in writing by ADWR in accordance with generally accepted procedures for measuring subsidence, for so long as the Project is using material quantities of groundwater.

Additionally, when the NAEP facility first begins withdrawing groundwater in connection with the Project, Applicant's withdrawal in any given year shall not exceed 270 acre-feet.

13. Applicant will, in good faith upon reasonable notice, participate in a Commission sponsored workshop or other forum addressing the regional natural gas infrastructure and market.

Line Sitting Committee, May 1-07 Jack Ehrhardt

RE; Intervention Status request.

Chairman Woodall;

Per your request today, docket control has supplied a copy of a letter they sent me, letting me know that the docket # was wrong on my submittal to them-April 23 -07. I told them that they gave me the # that they say is wrong, but they wanted me to change it, and send it back, so I did. At that time I asked them was there anything else I should do and would this application still be ok- and they said this is all I had to do.

I am requesting you approve my request for intervention status.

First and for most is that the public access to our system is of utmost importance to our Democracy. I was never notified by Docket control that I was under a time line. When I received their letter I double-checked with them if all was well. They said yes. When I talked to them yesterday, they again said I was good to go.

I have also given you a copy of what I was given about the submittal time from the A.A.C. and it says 5 days prior. I did submit to docket control within that time line and sent to the applicant with in 5 days also

I was also not aware or told by anyone that I could only represent myself and I am changing my status to lone citizen of Mohave County. With some usual circumstances, I have met the intent of the filing and request your granting my request.

Respectfully submitted

Jack Ehrhardt.....Lone citizen

4105 n. Adams street

Kingman AZ. 86409

Jack Ehrhardt

January 1, 2007

Arizona Corporation Commission
Docket Control
1200 W Washington Street
Phoenix, AZ 85007

RE: MOTION TO INTERVENE in the Application of ABC Water Company for increase in its Rates and Charges for utility service.

DOCKET No. W-01234A-07-0567

My name, address and telephone number are listed below.

I wish to intervene in the application for increases in the Water Rates and Charges filed by ABC Water Company. I am a commercial / residential customer of the Utility and therefore have an interest in the ramifications of an additional increase in the water rates.

I hereby certify that a copy of this Notice of Intervention has been mailed to ABC Water Company, 123 Main Street, Anytown, AZ 85000.

Sincerely,

Sample

John & Jane Smith
123 Sample Street
Anytown, AZ 85000
Telephone (602) 123-1234

CC: Arizona Corporation Commission (13)
ABC Water Company (1)

S MPLE S MPLE S MPLE S MPLE S MPLE

INTERVENTION

Persons desiring to intervene must file a written Motion to Intervene with the Arizona Corporation Commission (original and thirteen copies), which Motion must also be served upon the Company or its counsel, and should, at the minimum, contain the following:

1. The name, address and telephone number of the proposed intervenor and of any party upon which service of documents is to be made if different than the intervenor.
2. A short statement of the proposed intervenors interest in these proceedings (e.g., a customer of the company, a shareholder of the Company, a Competitor, etc.)
3. A statement certifying that a copy of the Motion to Intervene has been mailed to the company or its counsel.

Motions to Intervene should be filed at least 5 days before the hearing. Failure to intervene will not preclude any customer from appearing at the hearing and making a statement on his own behalf.

NOTICE

Pursuant of rule R14-3-102: all formal documents and other papers filed with the Arizona Corporation Commission shall be limited in size to 8 ½ x 11 inches.

There will be **NO EXCEPTIONS** to the rule! All others will be returned.

An original and thirteen (13) copies of all documents **MUST** be filed along with a complete and signed Docket Control Cover Sheet.

Arizona Corporation Commission
Docket Control
1200 West Washington
Phoenix, Arizona 85007

Date: April 25, 2007

All filings must meet the following criteria:

a. Original document and 13 additional copies Plus two per additional docket number
b. 1 copy of a completed cover sheet (to accompany the original.)
c. The assigned docket number listed on the cover sheet, the first page of the original document AND all copies.

Enclosed are the documents you submitted for filing with Docket Control of the Arizona Corporation Commission.
Your filing is being returned because it does not have:

☐ The required number of copies.

☐ A completed cover sheet.

☒ The correct/assigned docket number written on the document.

☐ In accordance with Arizona Revised Statutes §39-101 *et seq.*, all documents filed are a matter of public record. Therefore, Docket Control cannot accept a filing that contains confidential materials. You may contact our Legal or Hearing Divisions to discuss procedures for submission of confidential material. Hearing: [602] 542-4250 Legal: [602] 542-3402.

☒ Other: The docket number listed is incorrect. Please resubmit your filing with the correct docket listed on the original and each copy. For the correct and complete docket numbers, please refer to eDocket which is located on our website, www.cc.state.az.us

Thank you for your cooperation in this matter and we apologize for any inconvenience.

Rachelle L DeWitt

Rachelle DeWitt Docket Control (602) 542-3477

Committee Ex 2

EXHIBIT
tabbies
Committee-2
Admitted

NEPA Process for the NAEP

- What is theWestern Area Power Administration?
- Western's Role in the Northern Arizona Energy Project
- NEPA Process – What have we done and where do we need to go

What is Western?

Western is a Federal power marketing agency under the U.S. Department of Energy.

"We market and deliver reliable, cost-based hydroelectric power and related services."

—Western's Strategic Plan, Sept. 2003

Service territory

- 15 western and central states
- Almost 17,000 miles of transmission lines
- Markets and transmits about10,000 MW of power from 56 hydropower plants and from the U.S. entitlement at Navajo Generating Station near Page, AZ

Western's Transmission System

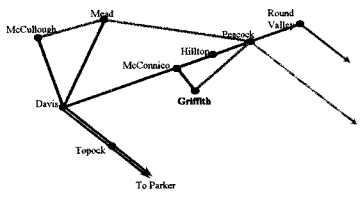

Parker-Davis Project
Central Arizona Project
Pacific NW/SW Intertie Project

Western's Agency Action

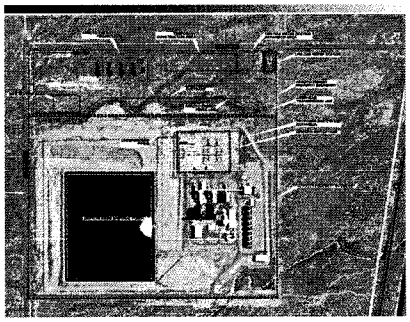

What we've done in NEPA Process

- Determination
  - EA determination approved 2/27/07 (see:)
  - Based on NAEP's proposal to limit output to 50 average MW or less
  - EA to support a Western determination on whether or not to prepare an EIS

What we've done in NEPA Process

- EA Notification and solicitation for input
  - Mailed March 10, 2007
  - Distributed to 216 parties, including surrounding landowners, agencies and Tribes
    - Posted on Western's website: http://www.wapa.gov/transmission/internaep.htm
  - Input requested by March 31, 2007, to help define scope for EA – constitutes Western's scoping process

What we've done in NEPA Process

- Invited agencies to participate in the NEPA Process
  - Mohave County accepted invitation
  - Response from Arizona Department of Water Resources pending

BEFORE THE ARIZONA CORPERATION COMMISSION SEPT. 13-07
Docket # 1-00000ff-07-0134-00133

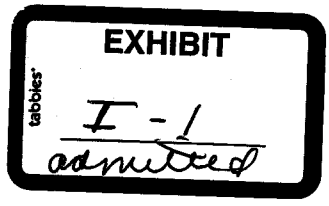

Commissioners and line sitting Committee Members,

Greetings, Herbert Guenther, Director of A.D.W.R. in his June 4-07 letter to the A.C.C. Commissioners states "we are reminded daily that the best future water supply is the one we don't use today; that is, every gallon of water we save through conservation is one we have for tomorrow".

It is the responsibility of the A.C.C. in the review process in issuing a certificate of Environmental compatibility to weigh the simple basic facts .Historically big business needed support from big government to flourish and make our economies strong. This paradigm has shifted as we look to using more sustainable practices in all aspects of community development. Growing Smarter is our adopted model. Climate change with ice shelf's melting around the world has made all people reconsider the influence of human activity and how it directly affects our life supporting Eco-System. If we had acted sooner we would not be in the alarming state we are in today. This goes for the water management decision we make today.

In the context of Director Guenther's letter on saving every gallon we are required to face the fact that the applicant of the Griffith power plant, Northern Energy project has refused to use the Best Available Current Technology in water conservation measures for their power plant. They simply want to take the water to increase their profit margin and forget the community, so they refuse to use viable dry cooling technology. Dry cooling technology is used in Boulder City Nevada and all over the world.

If the A.C.C. approves this power plant or any other wet cooled power plant in our desert state, then the term environmental compatibility means nothing and we are not executing mature leadership for our future generations. Wet cooled energy production simply does not belong in the arid, drought stricken desert. There are wet areas in the county where these power plants can go. If these types of applications are turned down , these corporations are not hurt, they simply chuckle and say to themselves; boy they were smart, and move on to somewhere else, probably where there is abundant water.

Reference 'Water and Power: inexorably tied to Arizona's growth" .Richard Rushforth.

You combine this simple concept with the fact that the Government and the citizens of Mohave County enacted in their General Plan that gas fired power plants should be dry cooled .What more needs to be stated. The current existing county Government does not feel compelled to defend the policy for its citizens, but the A.C.C. must or be in violation of the heart and intent of the process to determine Environmental Compatibility.

Please also reference the, North West Arizona Water Shed Council letter that explains the flawed A.D.W.R. report on the water supply evaluation.

The citizens of Arizona appreciate you honest and sincere consideration.

Respectfully ; Jack Ehrhardt Intervener,4105 North Adams St Kingman az,

Jack Ehrhardt

I-2

Jack Ehrhardt
9287574202

Power Plant Cooling Technology

Prepared for: Mohave County Public Land Use Committee,

June 18, 2002

EXHIBIT
tabbies
I-2
admitted

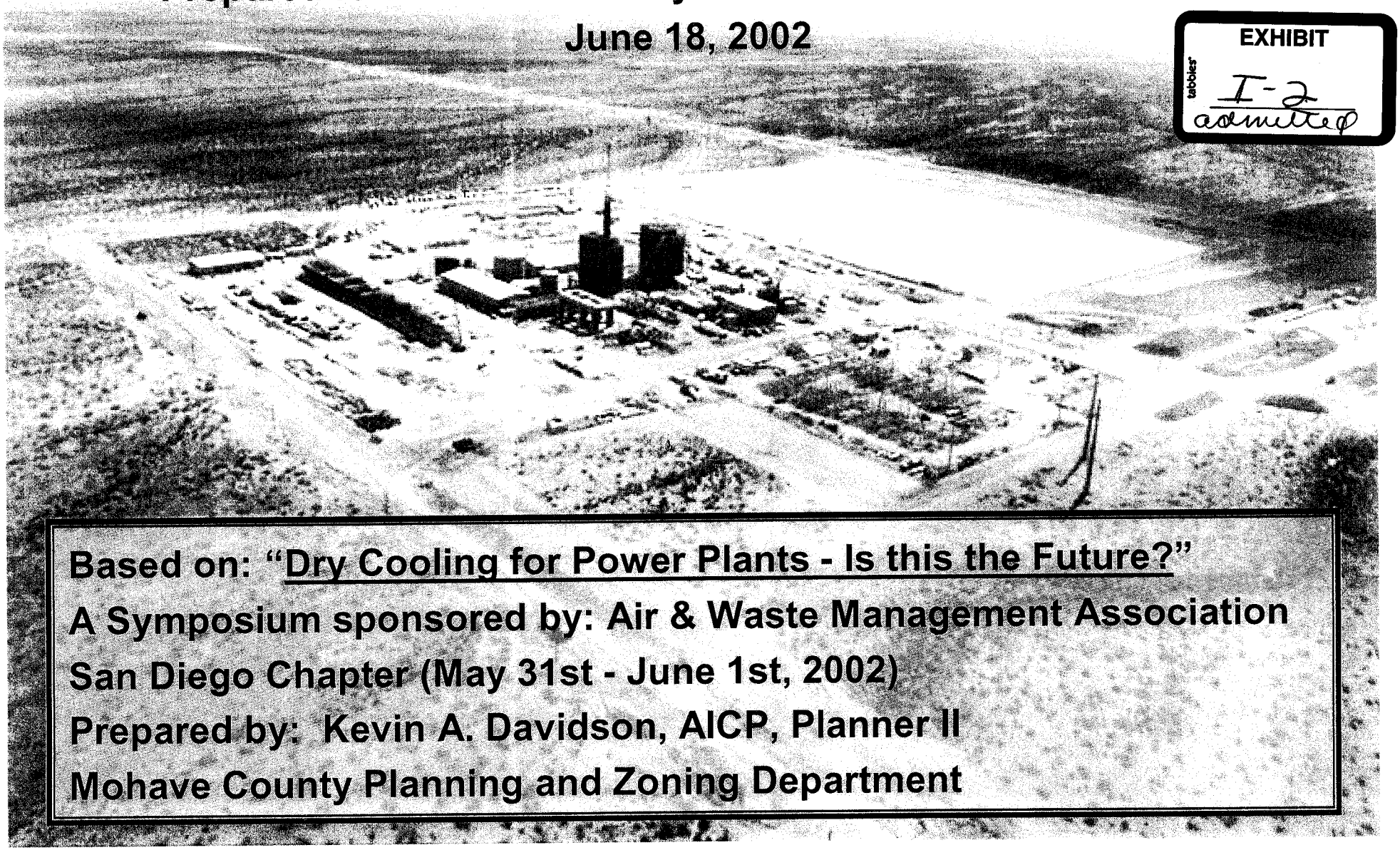

Based on: "Dry Cooling for Power Plants - Is this the Future?"

A Symposium sponsored by: Air & Waste Management Association

San Diego Chapter (May 31st - June 1st, 2002)

Prepared by: Kevin A. Davidson, AICP, Planner II

Mohave County Planning and Zoning Department

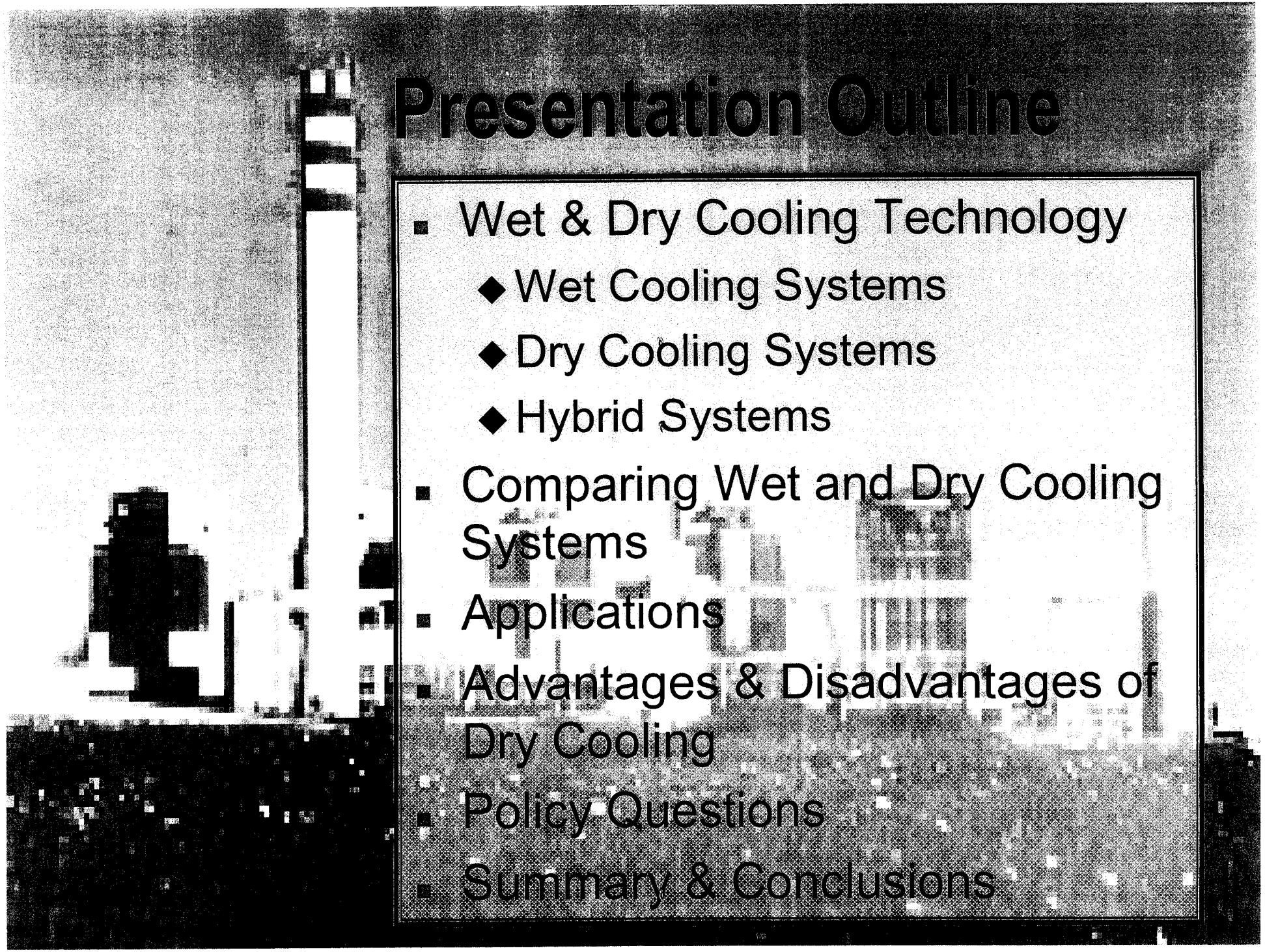

Presentation Outline

- Wet & Dry Cooling Technology
  - Wet Cooling Systems
  - Dry Cooling Systems
  - Hybrid Systems
- Comparing Wet and Dry Cooling Systems
- Applications
- Advantages & Disadvantages of Dry Cooling
- Policy Questions
- Summary & Conclusions

Wet Cooling Systems

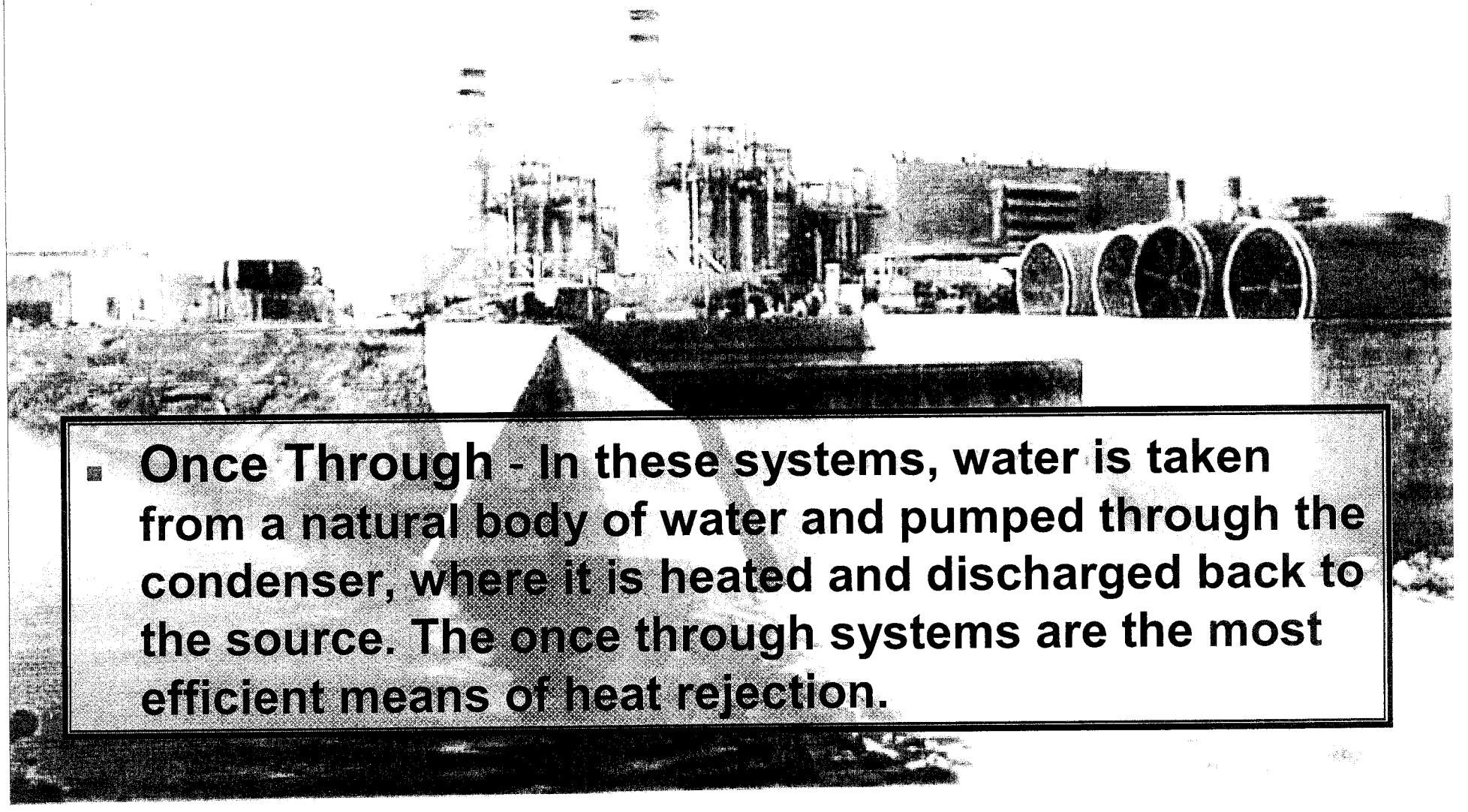

- **Once Through** - In these systems, water is taken from a natural body of water and pumped through the condenser, where it is heated and discharged back to the source. The once through systems are the most efficient means of heat rejection.

Wet Cooling Systems

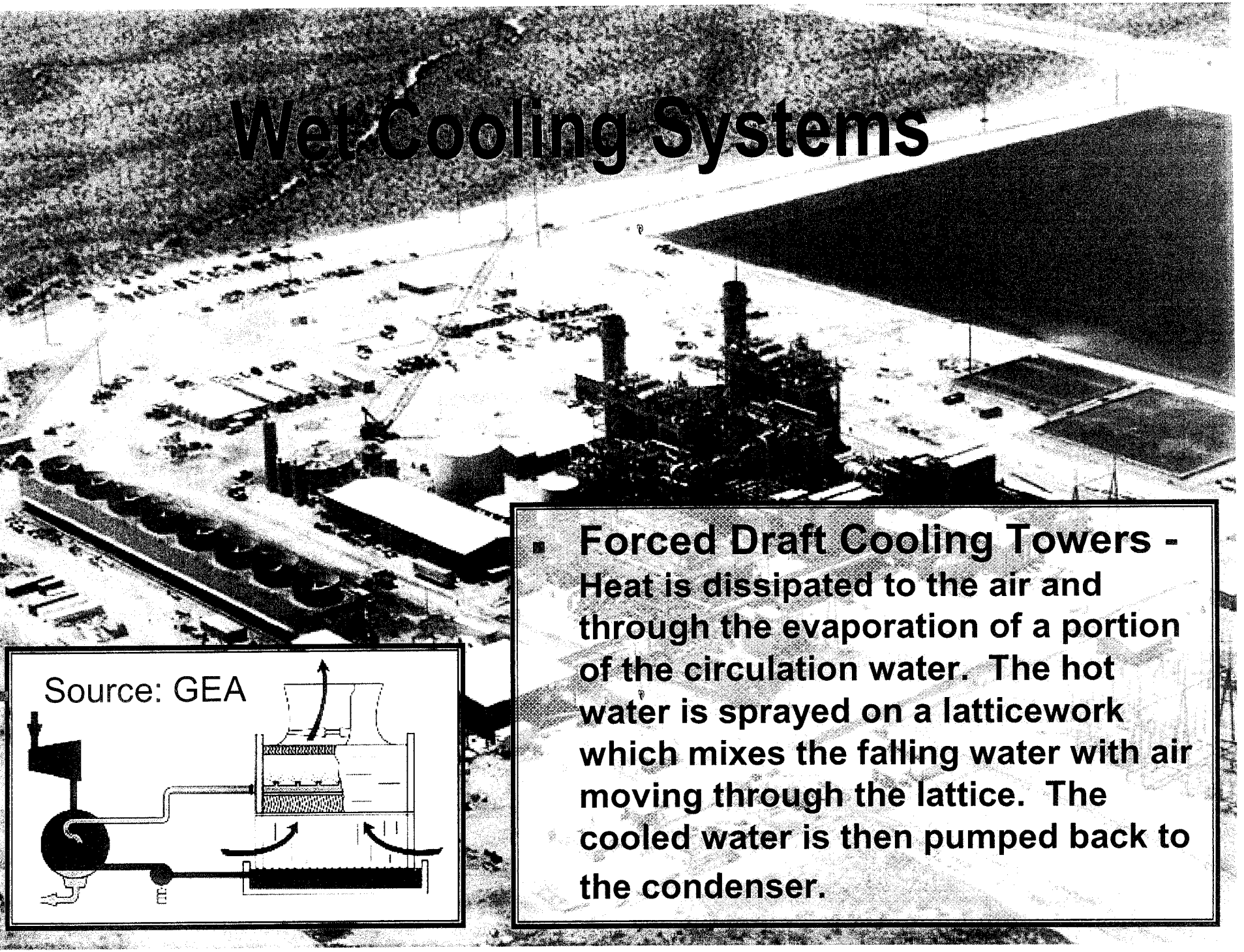

Source: GEA

- **Forced Draft Cooling Towers - Heat is dissipated to the air and through the evaporation of a portion of the circulation water. The hot water is sprayed on a latticework which mixes the falling water with air moving through the lattice. The cooled water is then pumped back to the condenser.**

Dry Cooling Systems

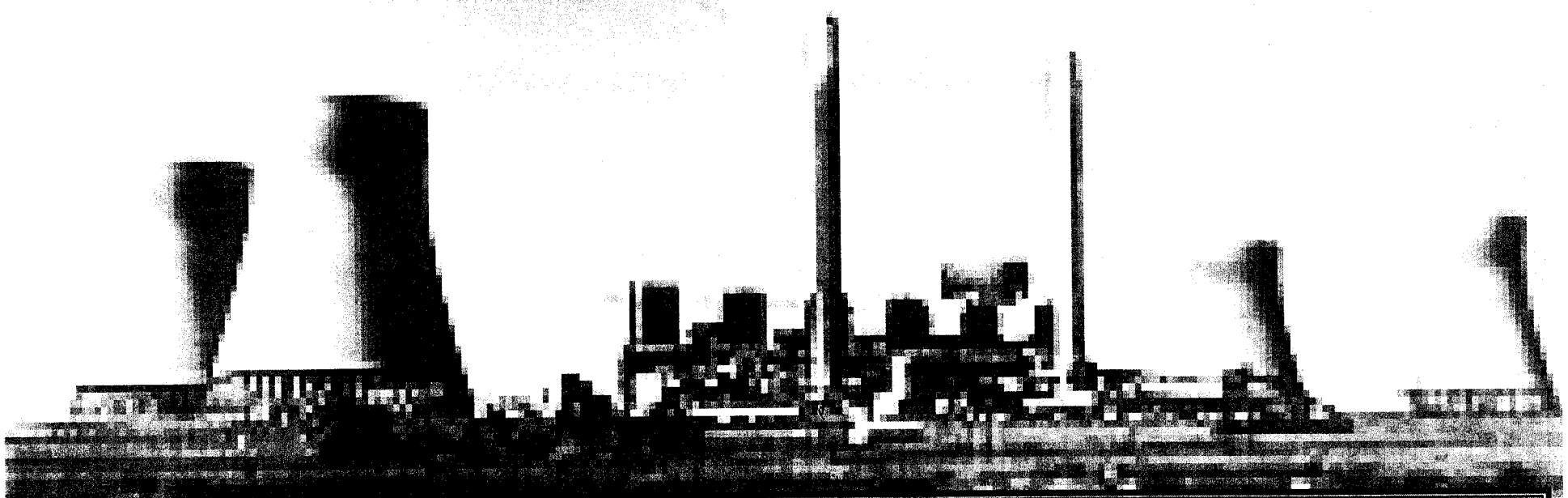

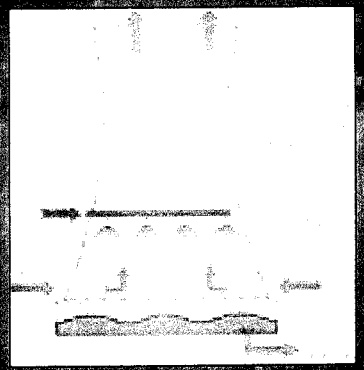

Source: BDT

- **Indirect -** via condensation of turbine exhaust steam with dry ambient air and secondary cooling water loop.
- This system is a desirable option for arid areas lacking in adequate water supply . . . In such circumstances, natural draft solutions are superior to those of forced draft because auxiliary power power consumption is substantially lower.

Dry Cooling systems

- **Direct** - This system combines the condenser with the tower. Turbine exhausted steam is admitted to a steam header through large ducts to minimize pressure drop and is condensed as it flows downward through a large number of finned tubes. The steam exhausted is cooled by atmospheric air, which is passed through a large number of finned tubes with the uses of a forced-draft fan. Finally the condensate flows by gravity to condensate receivers and is pumped back to the plant feedwater system by the condensate pump.

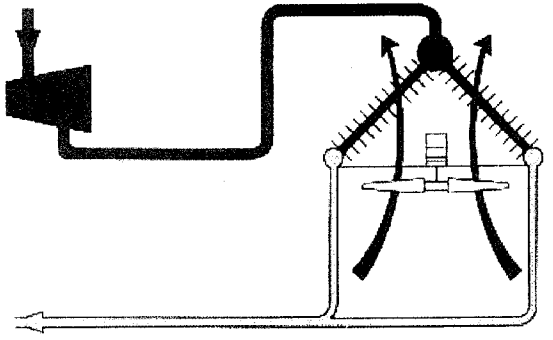

Source: GEA

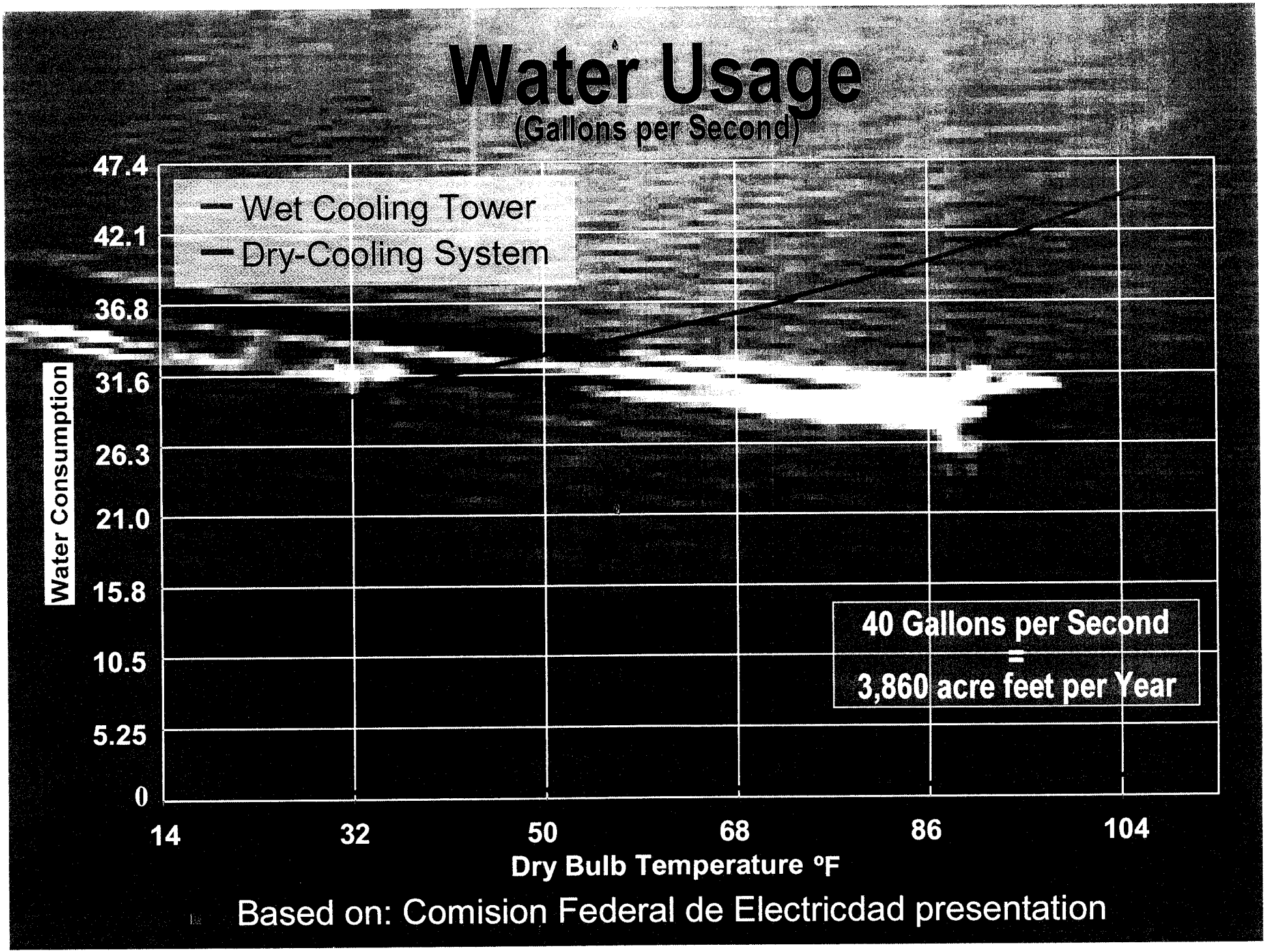
Water Usage
(Gallons per Second)
Wet Cooling Tower
Dry-Cooling System
Water Consumption
47.4
42.1
36.8
31.6
26.3
21.0
15.8
10.5
5.25
0
14
32
50
68
86
104
Dry Bulb Temperature °F
40 Gallons per Second
=
3,860 acre feet per Year
Based on: Comision Federal de Electricdad presentation

Water Usage for Parallel Cooling Systems

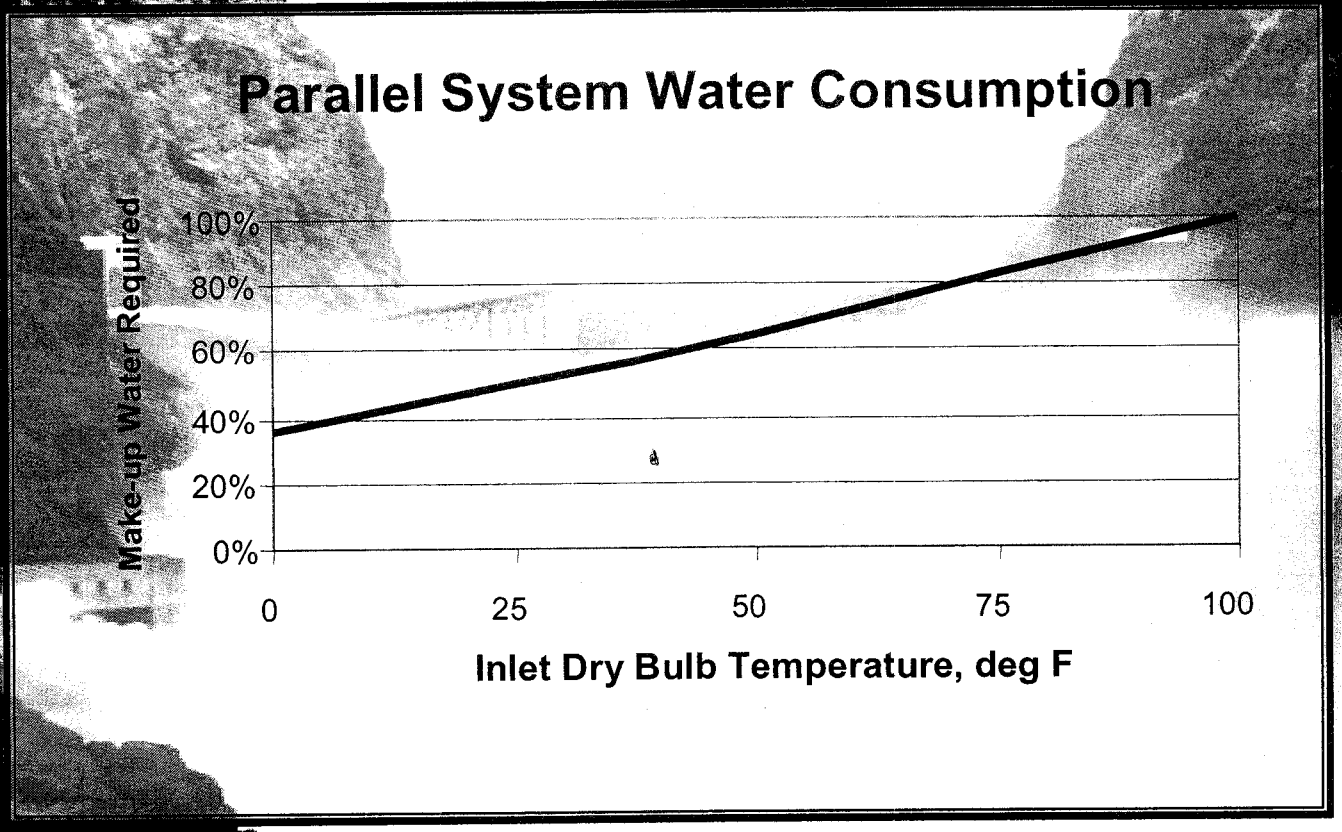

Source: GEA

Water Cost vs Incremental Cost of Operation due to Dry-Cooling System Use

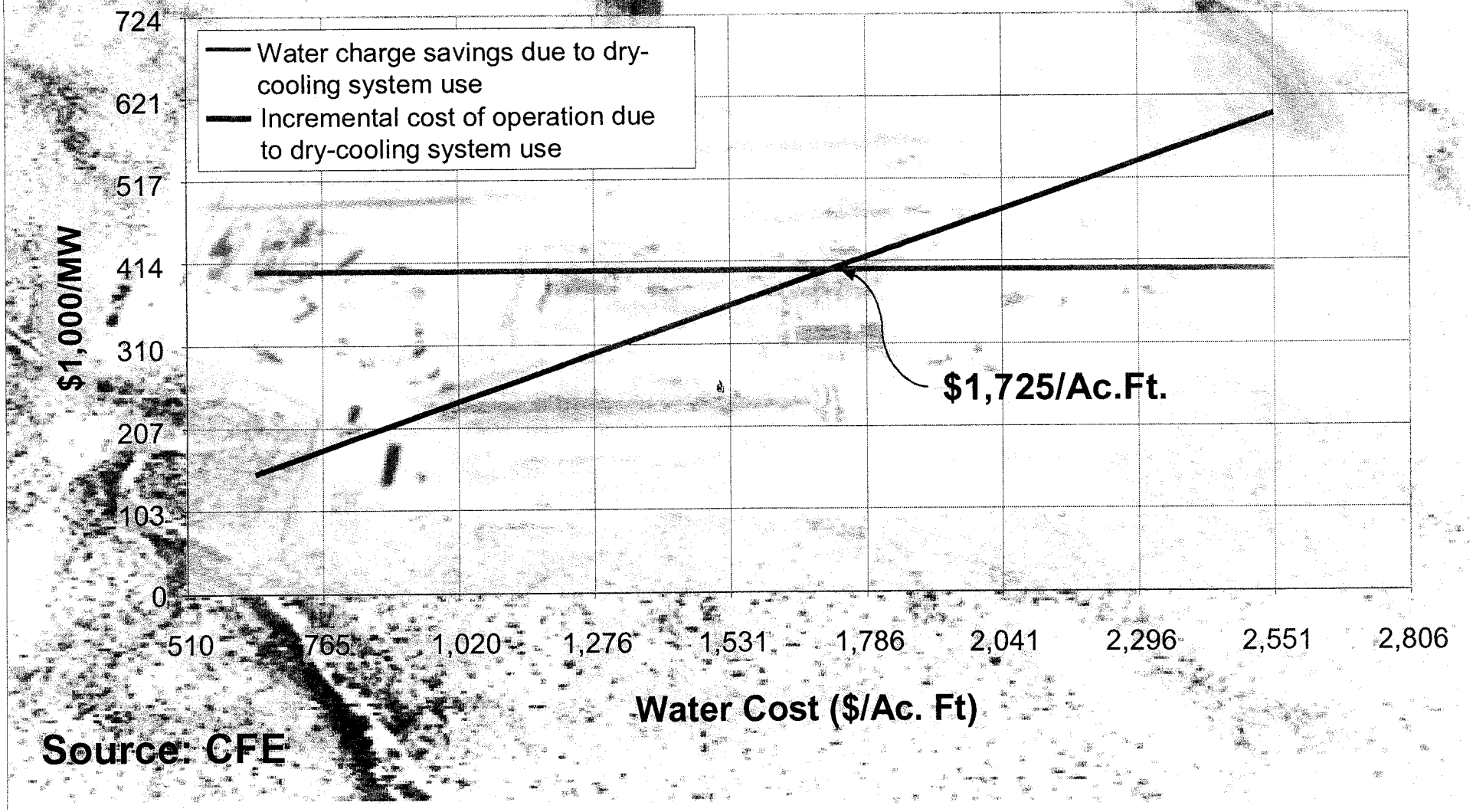

Source: CFE

Air Emissions

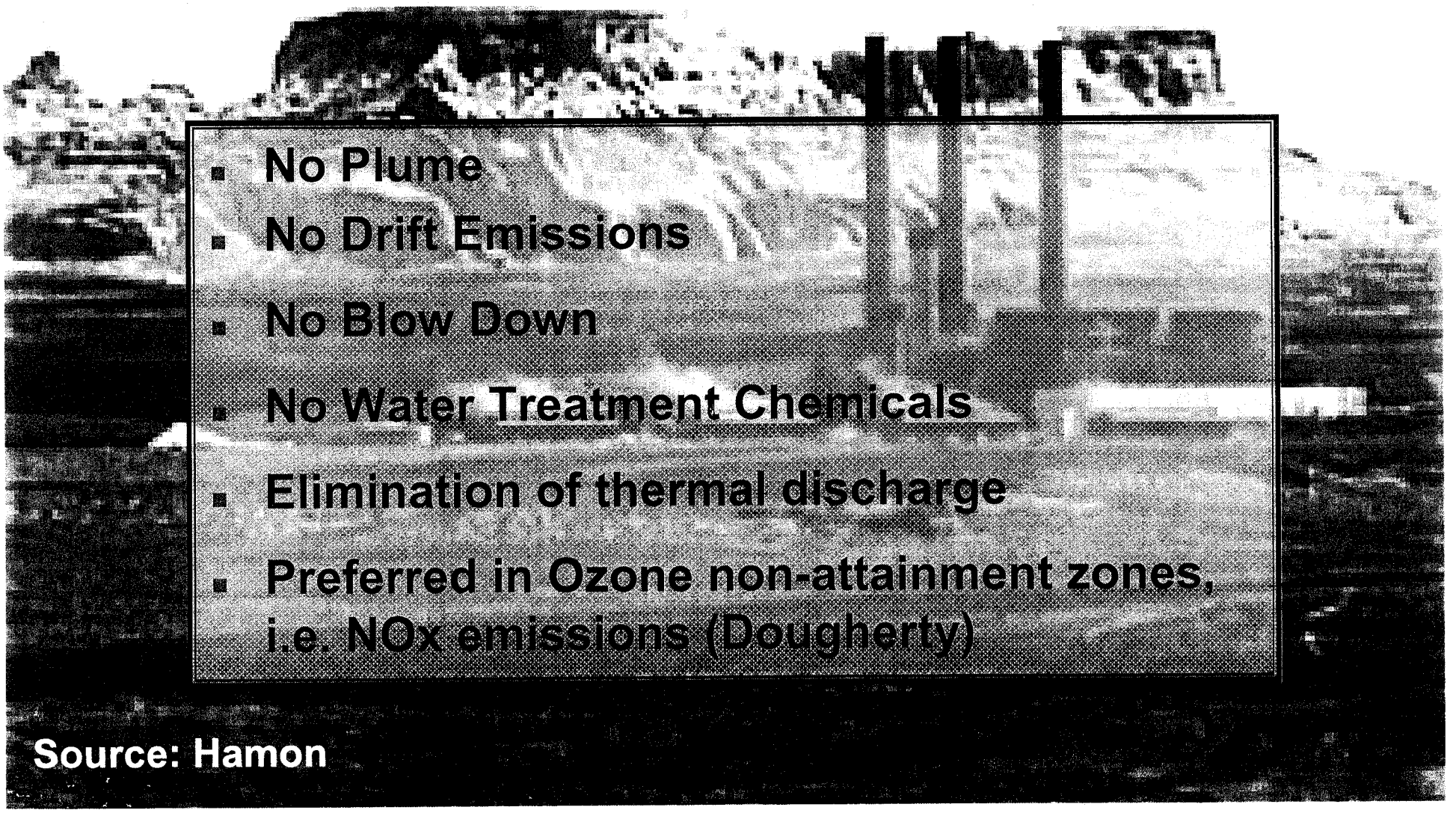

- No Plume
- No Drift Emissions
- No Blow Down
- No Water Treatment Chemicals
- Elimination of thermal discharge
- Preferred in Ozone non-attainment zones, i.e. NOx emissions (Dougherty)

Source: Hamon

Noise Abatement

Low Noise Air Cooled Condenser Trend

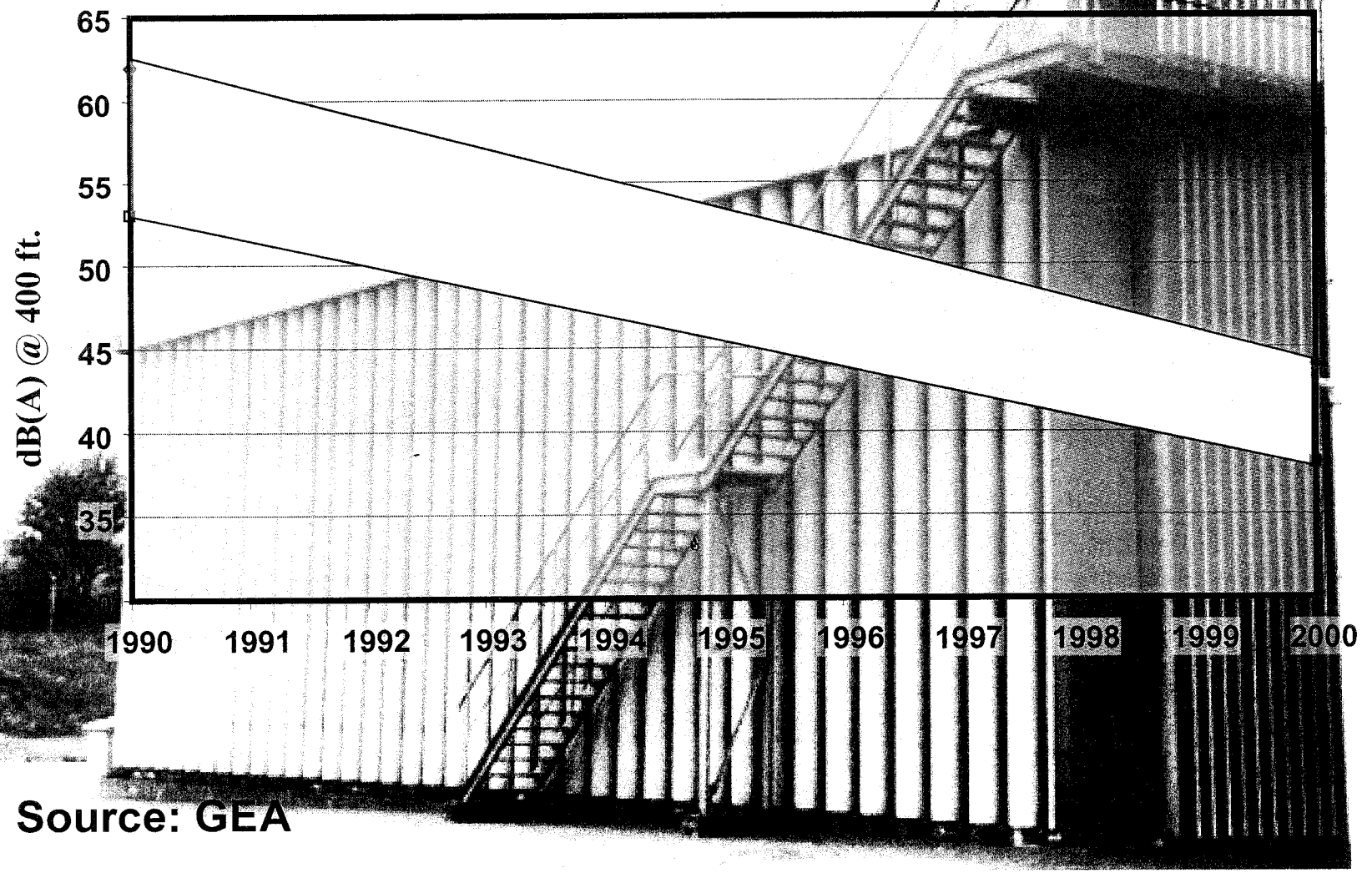

- Source: GEA

Power Output & Dry-Bulb Temperature

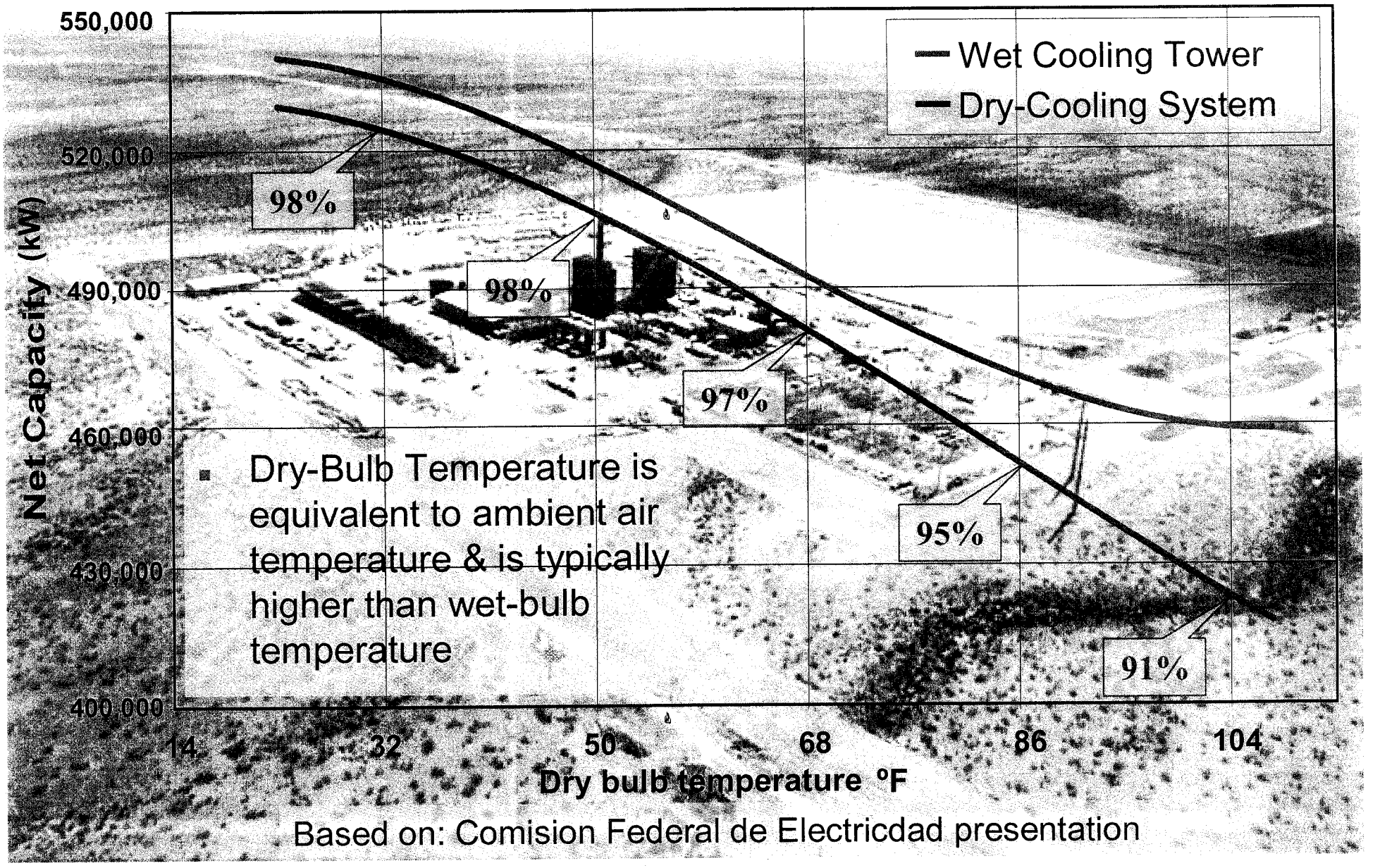

Based on: Comision Federal de Electricdad presentation

Up-front Capital & Annualized Costs

	Dry Cooling	Wet Cooling	Difference
500 MW Plant	**$278M**	**$259M**	**$19 M ($1.6 M/yr)**
Water Pipeline (1-2 miles)	$0.2M	$0.8M	<$0.6 M>
Water Supply	$0.2 M/yr	$2.7 M/yr	<$2.5 M/yr>
Water Pumping	-	$0.05 M/yr	<$0.05 M/yr>
Water Discharge and Treatment	-	$0.8 M/yr	<$0.8 M/yr>
Value of Power Loss	$3.2 M/yr	-	$3.2 M/yr
Total Annualized Cost	**$5.0 M/yr**	**$3.6 M/yr**	**$1.4 M/yr**

Cost effectiveness: $70,000 - $500,000/ton PM_{10}

(Costs based on ENSR estimates for a typical 500 MW plant using GT Pro software, 30-year plant life, $2 per Mgal of supply water and $3 per Mgal for water treatment, standard pipeline construction costs, and other factors)

- **Dry Cooled Condensers typically cost 50% to 150% more than Wet Cooled Towers to construct (Source: California Energy Commission).**

Long Term Operational Costs of Wet Cooling vs. Dry Cooling

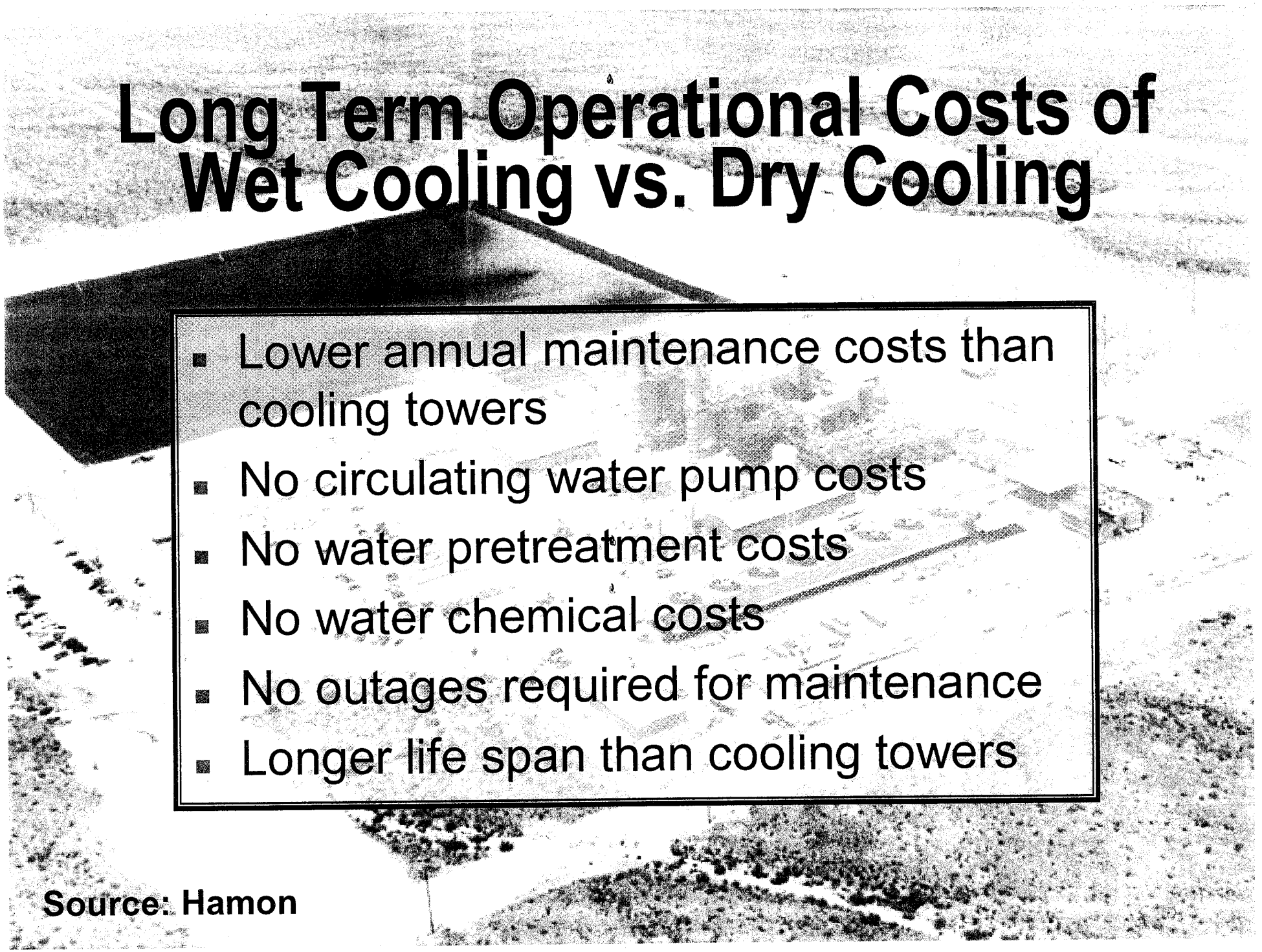

- Lower annual maintenance costs than cooling towers
- No circulating water pump costs
- No water pretreatment costs
- No water chemical costs
- No outages required for maintenance
- Longer life span than cooling towers

Source: Hamon

Applications

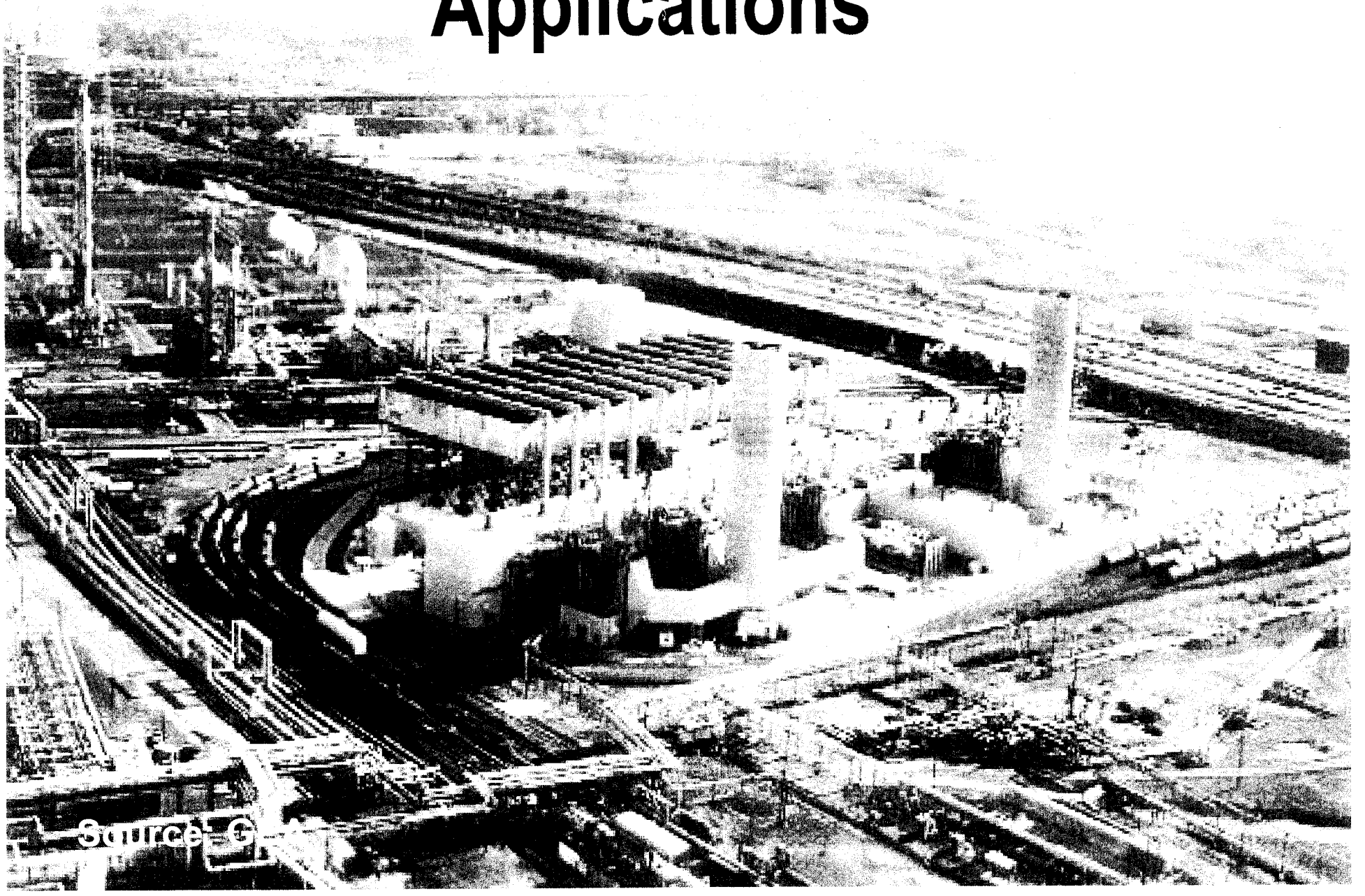

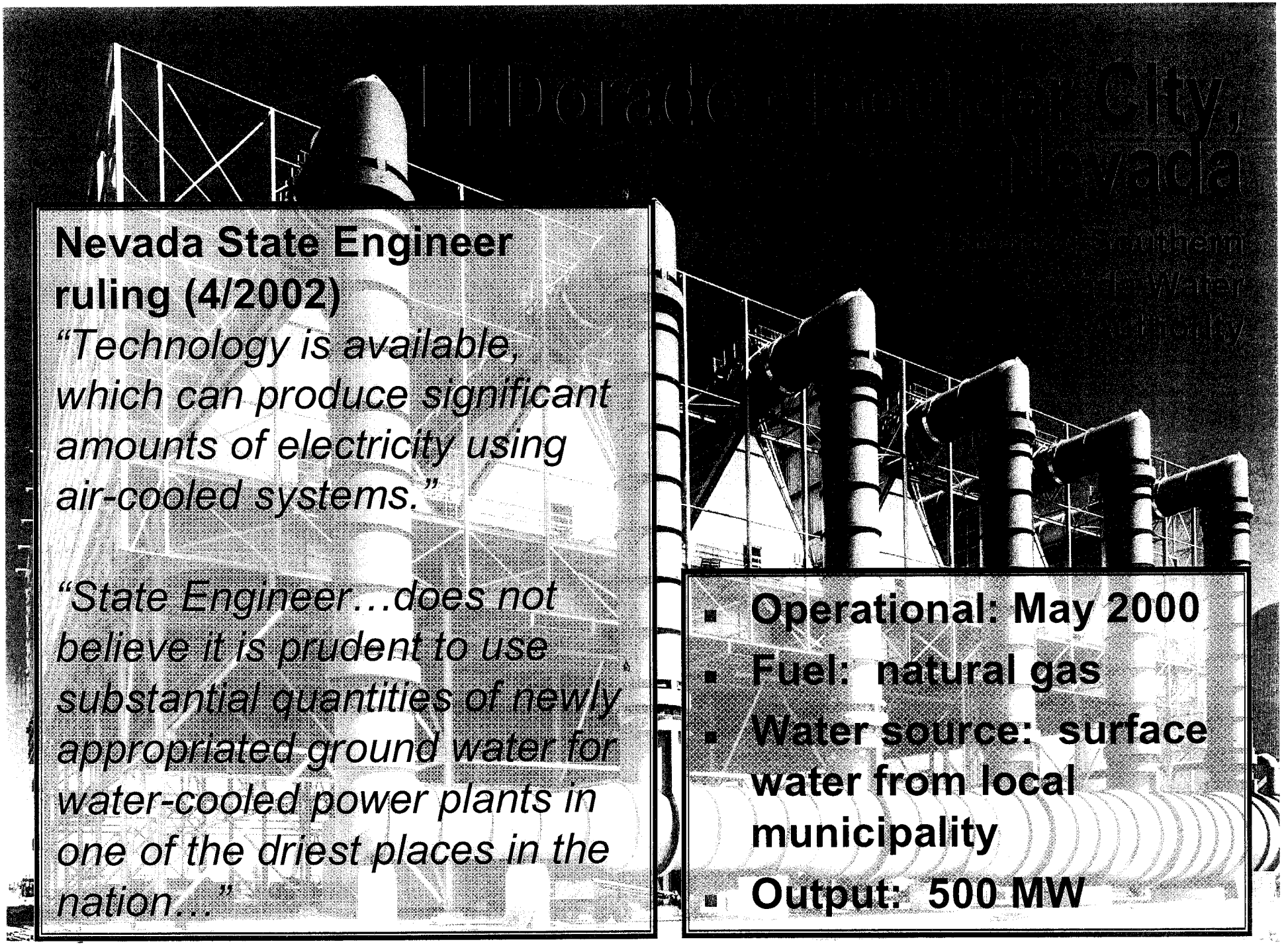

Boulder City, Nevada

Southern Nevada Water Authority

Nevada State Engineer ruling (4/2002)

"Technology is available, which can produce significant amounts of electricity using air-cooled systems."

"State Engineer…does not believe it is prudent to use substantial quantities of newly appropriated ground water for water-cooled power plants in one of the driest places in the nation…"

- **Operational: May 2000**
- **Fuel: natural gas**
- **Water source: surface water from local municipality**
- **Output: 500 MW**

Wyodak - Wyoming

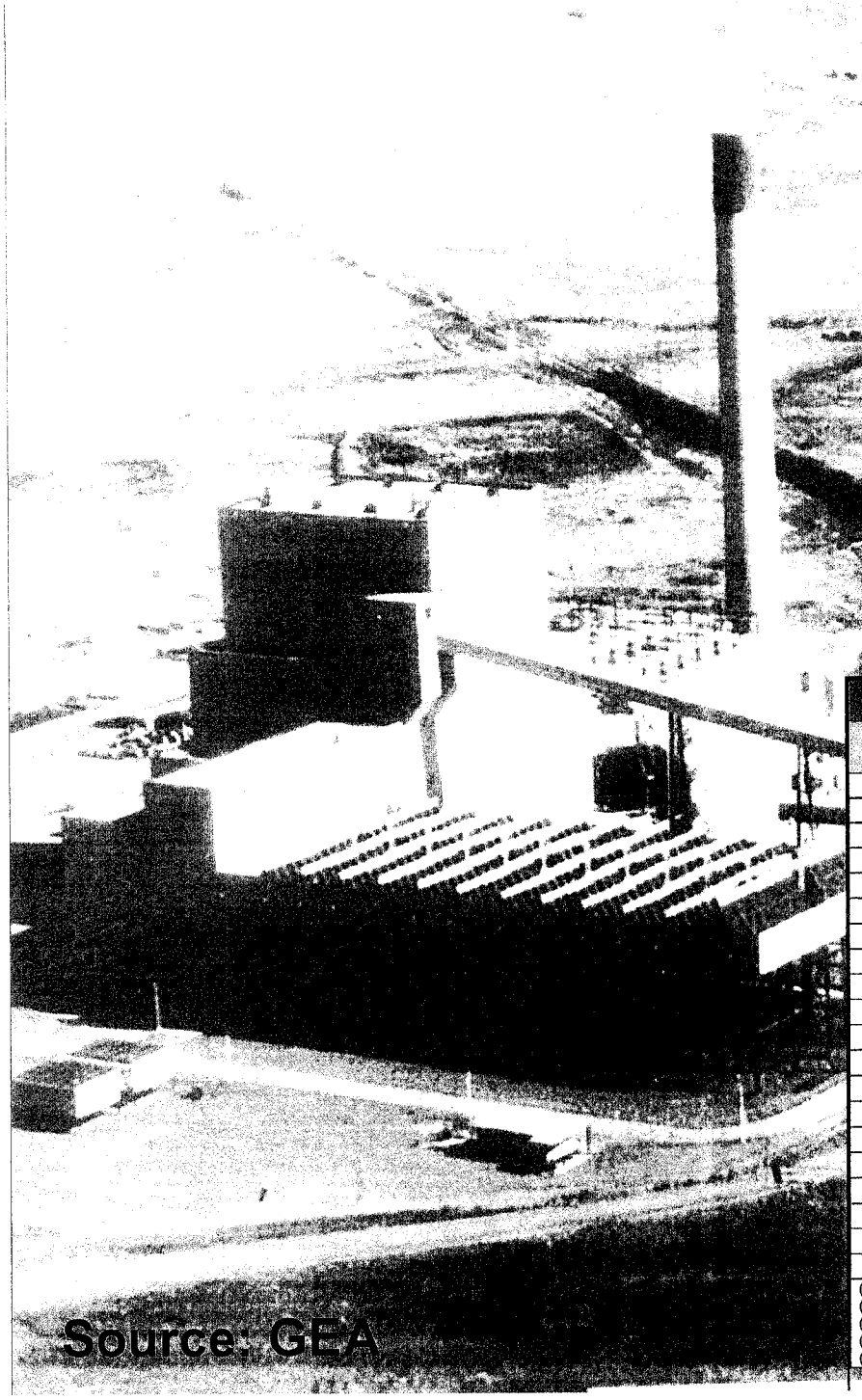

- Fuel: Coal
- Output: 330 MW
- Operational: 1977

WYODAK STATION OPERATING DATA

Year	# of Operating Hours	Availability Factor %	Power Generated (MWH)	Average Annual Output (MW)	Outage Forced by ACC (H)	Lowest Ambient Temp. (°F)	Highest Ambient Temp. (°F)	Wind Velocity Max. (MPH)
1997	8,552	97.3 (5)	2,869,916	335.6	0	[illegible]	-	-
1996	8,595	97.0 (5)	2,844,327	330.9	0	[illegible]	-	-
1995	7,911	85.9	2,504,477	316.6	0	[illegible]	101	81
1994	7,859	89.4	2,618,607	333.2	0	[illegible]	105	68
1993	8,689	98.8 (5)	2,857,533	328	0	[illegible]	97	60
1992	8,568	97.2 (5)	2,798,189	326	0	[illegible]	98	62
1991	7,365	83.8	2,386,596	324	0	[illegible]	102	67
1990	8,534	97.1 (5)	2,744,312	325	0	[illegible]	107	70
1989	5,984	68.3 (4)	1,935,790	323	0	[illegible]	103	64
1988	7,945	90.5	2,536,688	319	0	[illegible]	101	73
1987	8,213	93.0	2,685,570	327	0	[illegible]	100	59
1986	7,338	83.8 (3)	2,140,638	292	0	[illegible]	100	54
1985	8,032	91.7	2,889,390	360	0	[illegible]	103	39
1984	7,729	88.0 (2)	2,710,164	351	0	[illegible]	101	41
1983	7,816	89.2	2,089,310	267	0	[illegible]	104	38
1982	7,883	90.0	2,642,577	335	0	[illegible]	105	35
1981	7,809	89.1	2,688,253	344	0	[illegible]	104	36
1980	8,087	92.1	2,720,919	336	0	[illegible]	106	37
1979	7,324	84.0	2,396,837	327	0	[illegible]	100	32
1978	3,750	76.0	994,040	265	0	[illegible]	101	44

(1) Began commercial operation in June
(2) Major outage in 1984 was a five-week maintenance period.
(3) Low system demand extended maintenance outage to six weeks.
(4) Turbine dovetail cracking on L-1 caused a three-month extension of annual outage.
(5) No annual outage.

Source: GEA

Crockett - California

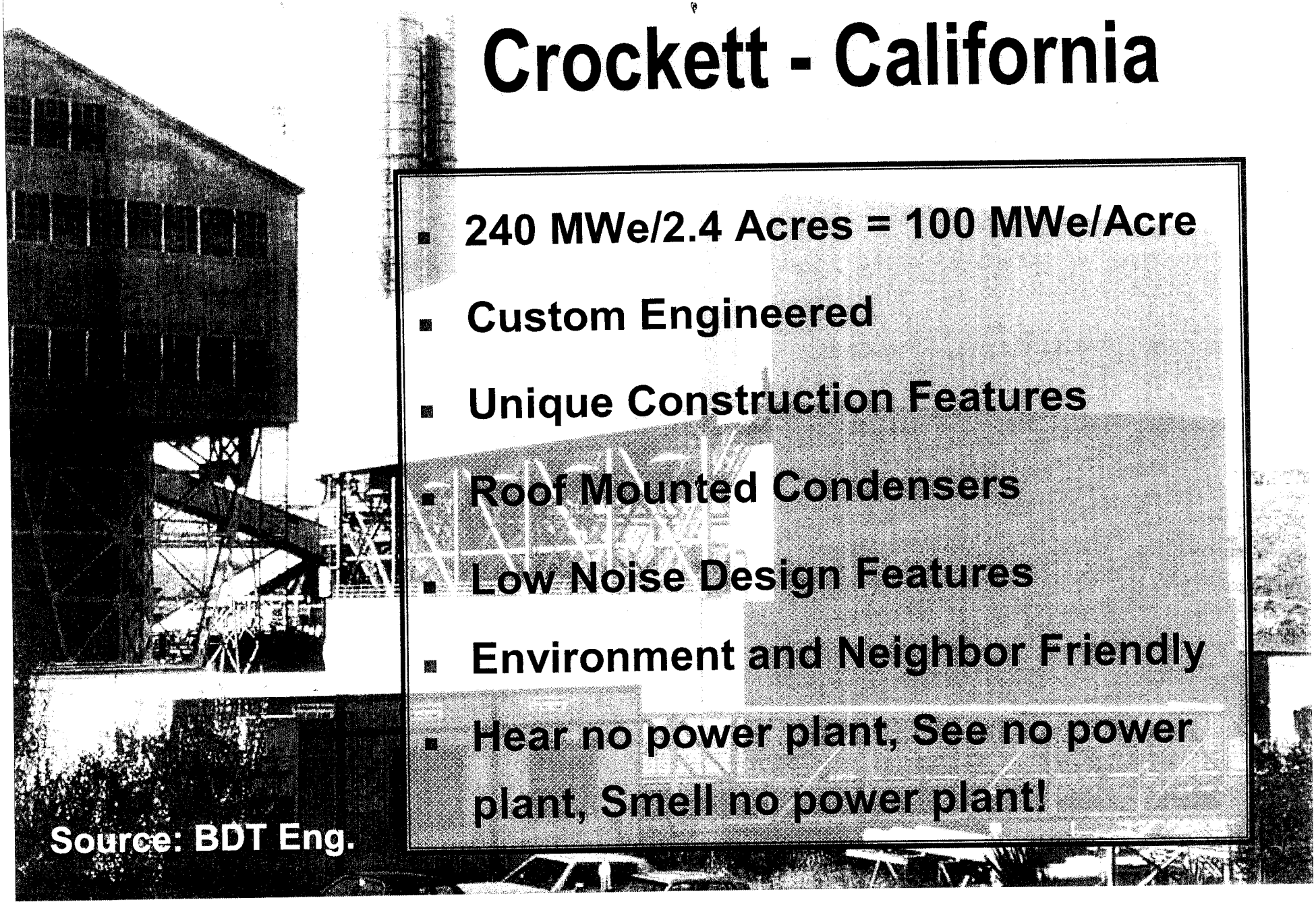

- 240 MWe/2.4 Acres = 100 MWe/Acre
- Custom Engineered
- Unique Construction Features
- Roof Mounted Condensers
- Low Noise Design Features
- Environment and Neighbor Friendly
- Hear no power plant, See no power plant, Smell no power plant!

Source: BDT Eng.

Samalayuca II, Mexico

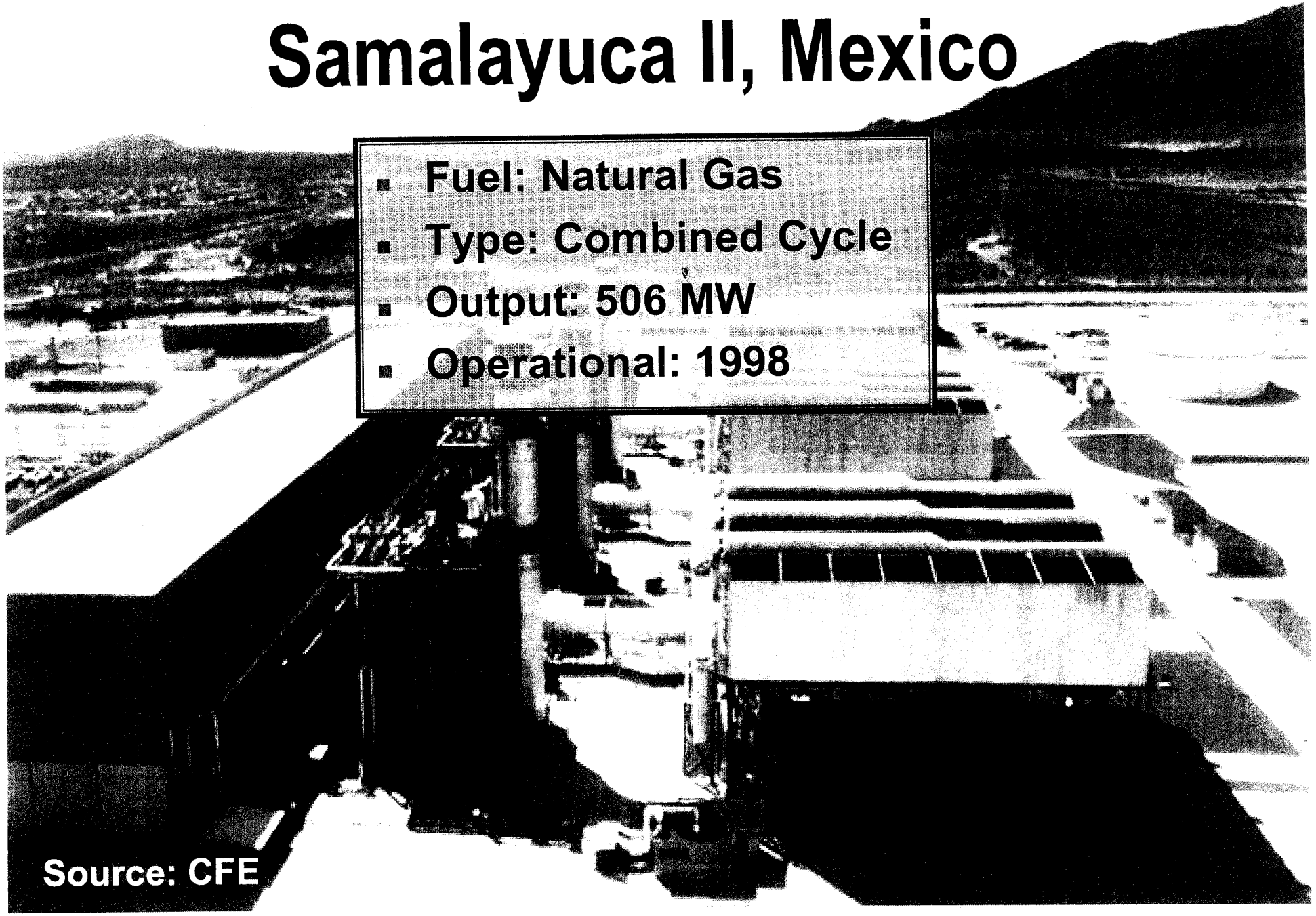

- Fuel: Natural Gas
- Type: Combined Cycle
- Output: 506 MW
- Operational: 1998

Source: CFE

Streeter - Iowa

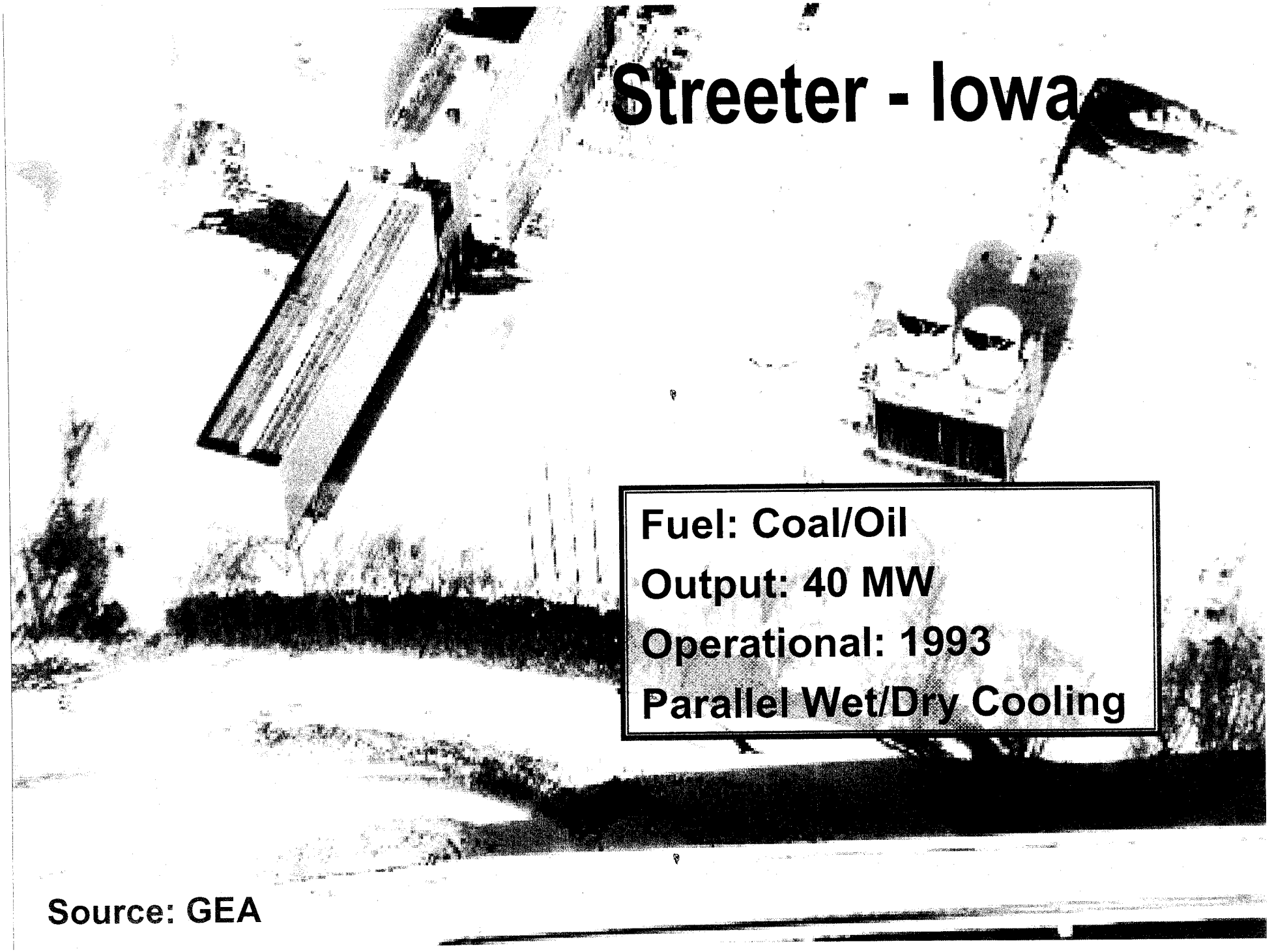

Fuel: Coal/Oil

Output: 40 MW

Operational: 1993

Parallel Wet/Dry Cooling

Source: GEA

Matimba, South Africa

- Fuel: Coal
- Output: 3.990 MW
- Operational: 1987
- Largest direct dry-cooled power plant in the world

Source: Eskom, SA

Advantages of Dry Cooling

- No Makeup Water for the cooling system.
- Less expensive to maintain.
- Do not require chemical additives or periodic cleaning.
- Lesser cycle makeup water supply.
- Conform with the environmental legislation on thermal pollution and Blow-down disposal.
- Good performance in cold weather.
- Permit power plants sitting near the fuel sources and the utility load-distribution center.
- The reduction of the total water consumption runs approx. 90%.

Disadvantages of Dry Cooling

- Lower power plant efficiency.
- Lower performance in hot weather.
- More expensive than wet towers.
- Possibility of hot air recirculation-reentering into the heat exchanger, decreasing the cooling performance.
- The warm air leaving the dry-cooling system may be mixed into the gas turbine intake air, greatly reducing the performance of the whole combined cycle.

Policy Questions

- Most beneficial use of water vs. other uses (agricultural and household)?
- Neighborhood impacts of water consumption, air and noise pollution, and job creation?
- Cost and availability of electricity?

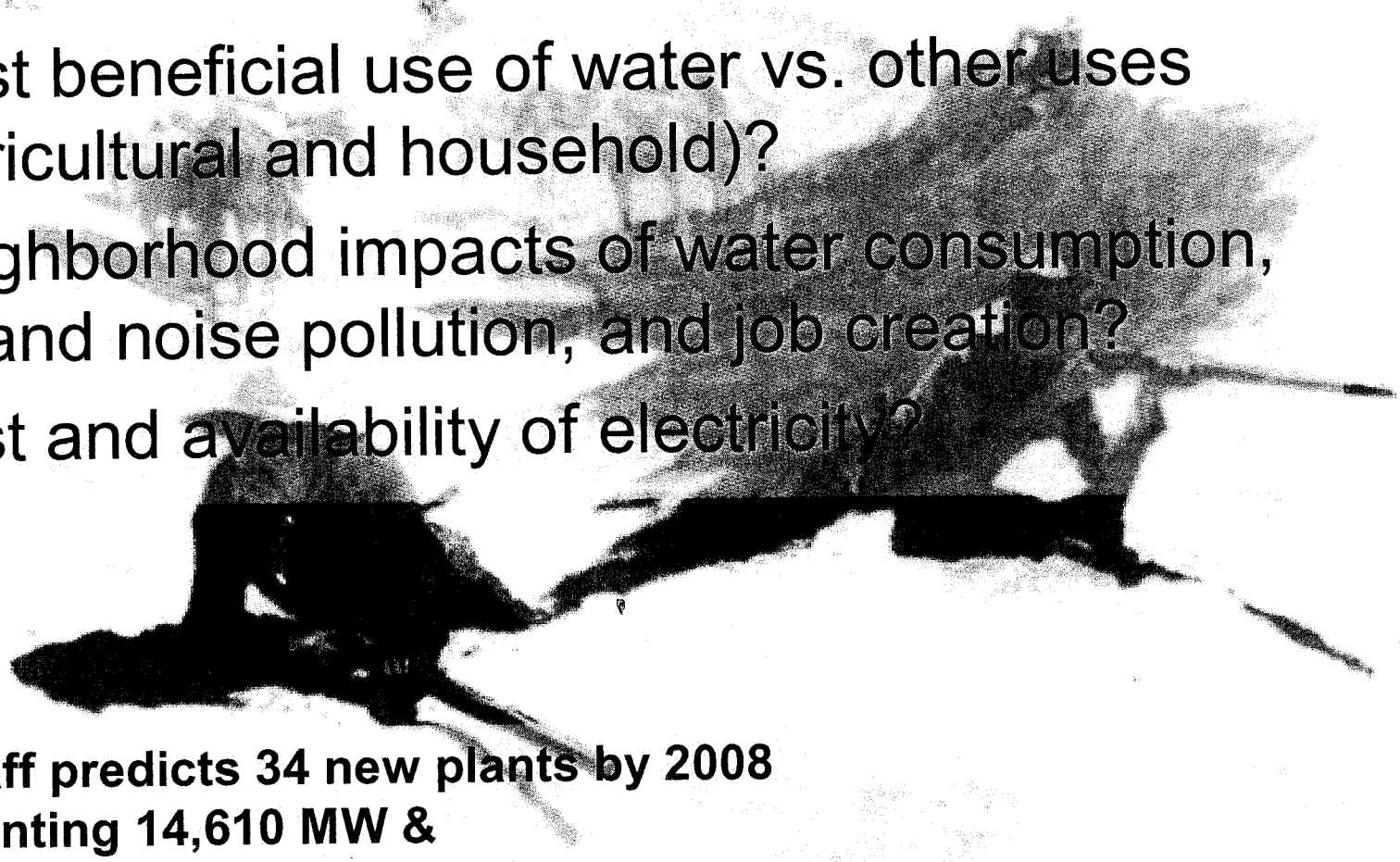

ACC Staff predicts 34 new plants by 2008
Representing 14,610 MW &
98,264 AF/Yr.

Summary & Conclusion

- Dry cooling technology is proven to work in hot, dry environments world-wide.
- Increased capital cost of a dry-cooling system makes it economical when water costs are high.
- Permitting path of least resistance
- Avoids delays and extra costs associated with permitting appeals process
- Suitable options available to mitigate environmental impacts from dry cooling

BEFORE THE ARIZONA POWER PLANT

AND TRANSMISSION LINE SITING COMMITTEE

IN THE MATTER OF THE APPLICATION OF NORTHERN ARIZONA ENERGY, LLC FOR A CERTIFICATE OF CONVENIENCE AND AND NECESSITY AUTHORIZING CONSTRUCTION OF A 175 MW NATURAL GAS-FIRED SIMPLY CYCLE GENERATING FACILITY AND ASSOCIATE TRANSMISSION LINE TO THE WESTERN AREA POWER ADMINISTRATION ("WAPA") GRIFFITH SWITCHYARD	DOCKET NO. L-00000FF-07-0134-0133

RECEIVED
2007 SEP 12 P 1:51
AZ CORP COMMISSION
DOCKET CONTROL

NOTICE OF FILING EXHIBITS

NOTICE IS HEREBY GIVEN that Mohave County ("Mohave") is filing the following exhibits with Docket Control:

Mohave-001	Map of well sites
Mohave-002	Zoning and subdivision map
Mohave-003	Water studies (USGS, Manera)
Mohave-004	ADWR/USGS presentation and agreement between Mohave County and ADWR related to the water study
Mohave-005	Mohave general plan
Mohave-006	ADWR agreement re water studies
Mohave-007	Griffith agreement dated April 26, 1999
Mohave-008	Griffith agreement dated September 4, 2007
Mohave-009	Recent map of the Sacramento Aquifer and lay out the boundaries of the GVID, other water companies
Mohave-010	Well field reports and test results

Mohave-011 ADWR Reports

Dated this 12th day of September, 2007.

JENNINGS, STROUSS & SALMON, P.L.C.

By _____
Kenneth C. Sundlof, Jr.
The Collier Center, 11th Floor
201 East Washington Street
Phoenix, Arizona 85004-2385
Attorneys for Mohave County

ORIGINAL AND 28 COPIES of the foregoing hand-delivered on this 12th day of September, 2007, to:

Docket Control
Arizona Corporation Commission
1200 West Washington Street
Phoenix, AZ 85007

COPY of the foregoing hand-delivered this 12th day of September, 2007, to:

Laurie Woodall, Chairman
ARIZONA POWER PLANT &
TRANSMISSION LINE SITING COMMITTEE
1275 West Washington Street
Phoenix, AZ 85007

Jay Moyes
MOYES STOREY
Viad Corporate Center
1850 North Central Avenue, Suite 1100
Phoenix, AZ 85004

Maureen A. Scott
Senior Staff Counsel
Legal Division
ARIZONA CORPORATION COMMISSION
1200 West Washington Street
Phoenix, AZ 85007

Ernest Johnson
Utilities Division
ARIZONA CORPORATION COMMISSION
1200 West Washington Street
Phoenix, AZ 85007

Lyn Farmer
Hearing Officer
ARIZONA CORPORATION COMMISSION
1200 West Washington Street
Phoenix, AZ 85007

Ed Ranger
1110 W. Washington Street
Phoenix, AZ 85007

Joy Rich
501 N. 44th Street
Suite 100
Phoenix, AZ 85008

Barry Wong
5025 N. Central Avenue, Suite 621
Phoenix, AZ 85012

Jack Haenichen
1700 W. Washington Street, Suite 600
Phoenix, AZ 85012-2105

Gregg Houtz
3550 N. Central Avenue, 4th Floor
Phoenix, AZ 85012

Wayne Smith
6106 South 32nd Street
Phoenix, AZ 85040

Honorable Mike Whalen
Mesa City Council
20 E. Main Street
Mesa, AZ 85211

David Eberhart
6801 W. Astor
Peoria, AZ 85372

Jeff McGuire
c/o Morgan McGuire
15806 N 59th Dr.
Glendale AZ 85306

COPY of the foregoing sent
via Federal Express this 12th day
of September, 2007, to:

Mike Palmer
604 Hovland
Bisbee, AZ 85603

Greystone Arcadis
630 Plaza Drive
Highlands Ranch, CO 80129

Jack Ehrhardt
4105 N. Adams Street
Kingman, AZ 86409

By Michele Sens

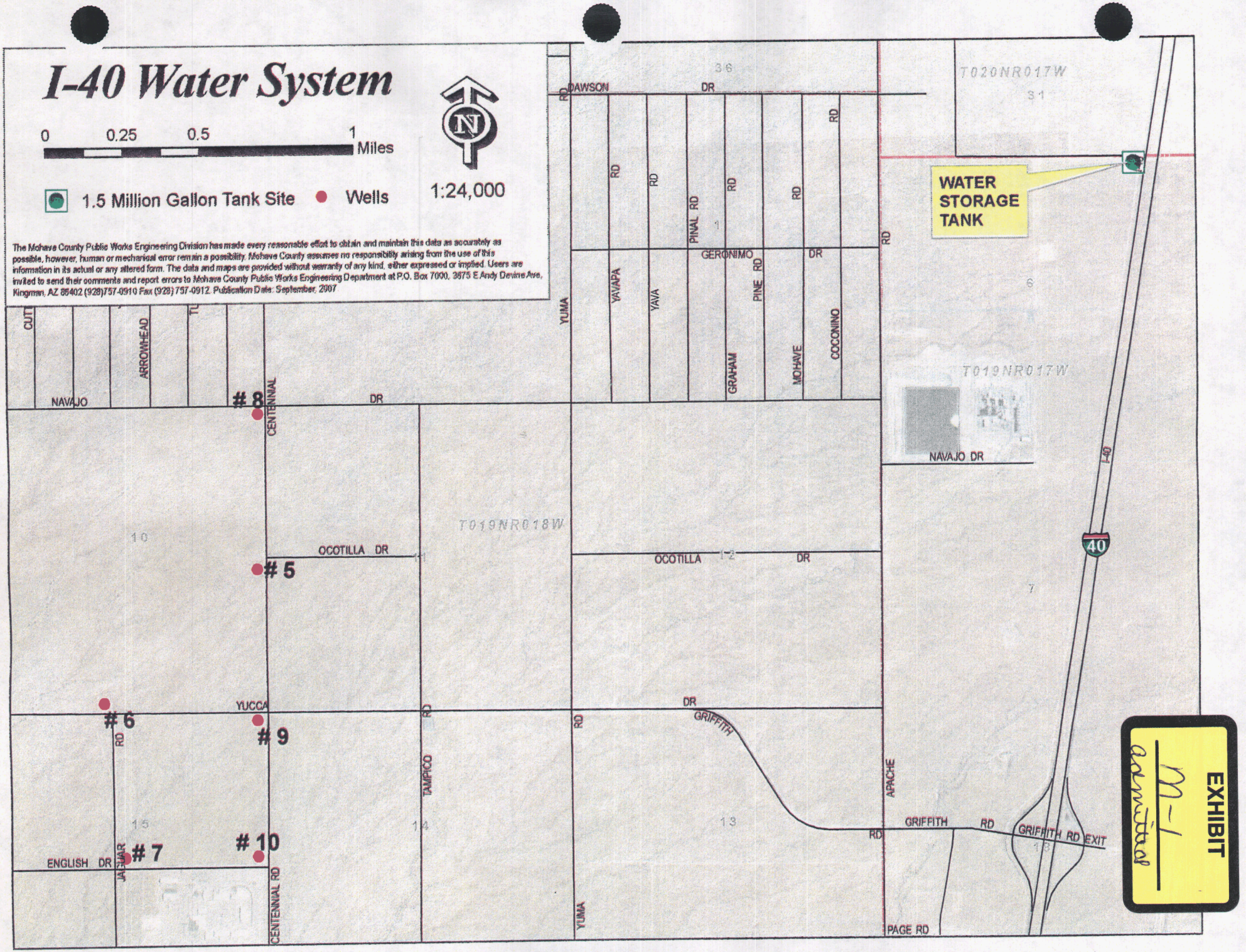
I-40 Water System
0 0.25 0.5 1 Miles
1.5 Million Gallon Tank Site
Wells
1:24,000
The Mohave County Public Works Engineering Division has made every reasonable effort to obtain and maintain this data as accurately as possible, however, human or mechanical error remain a possibility. Mohave County assumes no responsibility arising from the use of this information in its actual or any altered form. The data and maps are provided without warranty of any kind, either expressed or implied. Users are invited to send their comments and report errors to Mohave County Public Works Engineering Department at P.O. Box 7000, 3675 E Andy Devine Ave, Kingman, AZ 86402 (928)757-0910 Fax (928) 757-0912. Publication Date: September, 2007
WATER STORAGE TANK
5
6
7
8
9
10
DAWSON DR
NAVAJO
ARROWHEAD
CENTENNIAL
YUMA
YAVAPAI
YAVA
PINAL RD
GERONIMO DR
GRAHAM
PINE RD
MOHAVE
COCONINO
NAVAJO DR
OCOTILLA DR
YUCCA
ENGLISH DR
JAGUAR
CENTENNIAL RD
TAMPICO RD
GRIFFITH
APACHE
GRIFFITH RD
GRIFFITH RD EXIT
PAGE RD
I-40
T020NR017W
T019NR017W
T019NR018W
EXHIBIT
M-1
admitted

MOHAVE-001

Zoning Information

Arizona Corporation Commission
Siting Committee

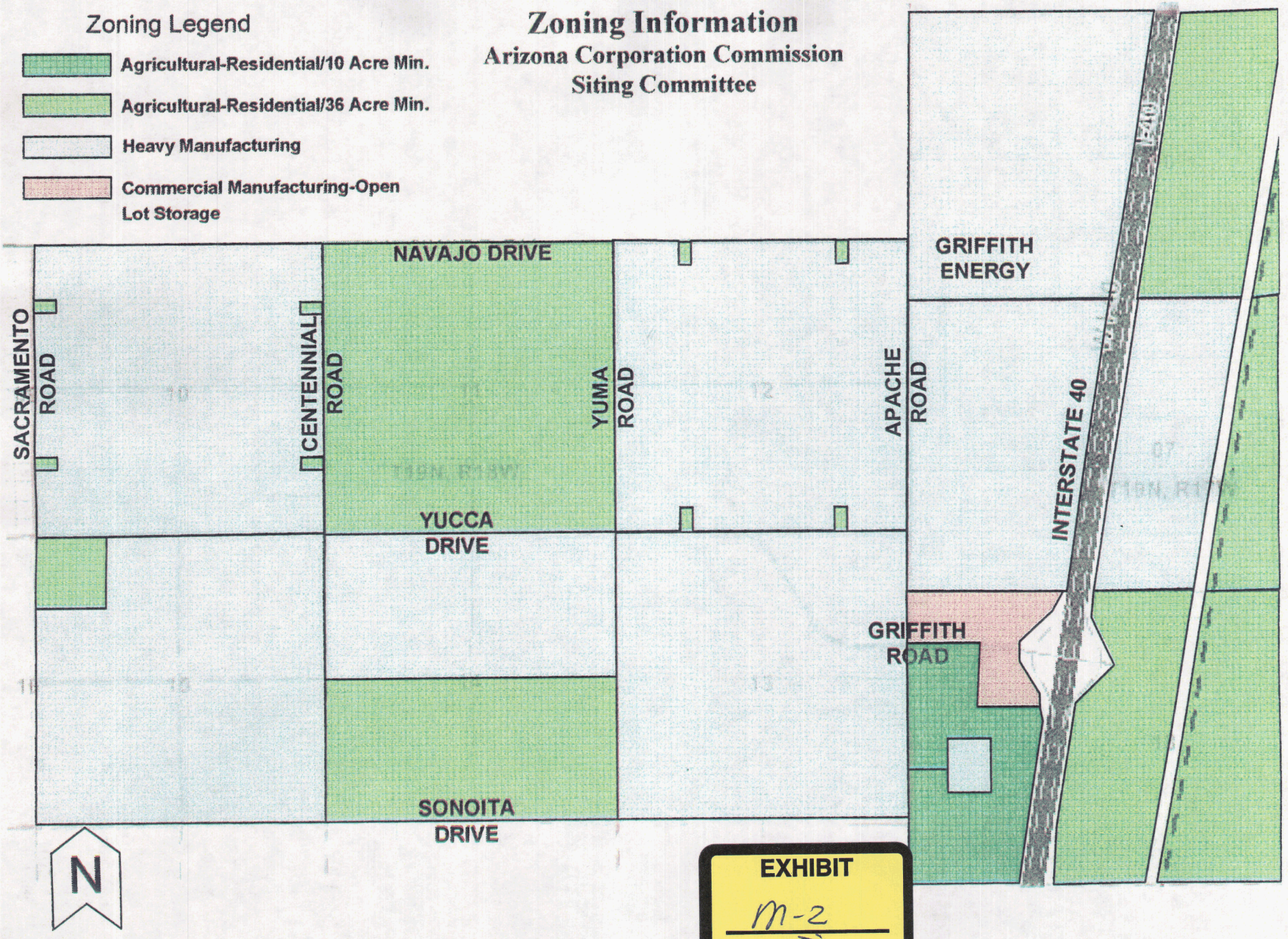

MOHAVE-002

Parcel Information

Arizona Corporation Commission
Siting Committee

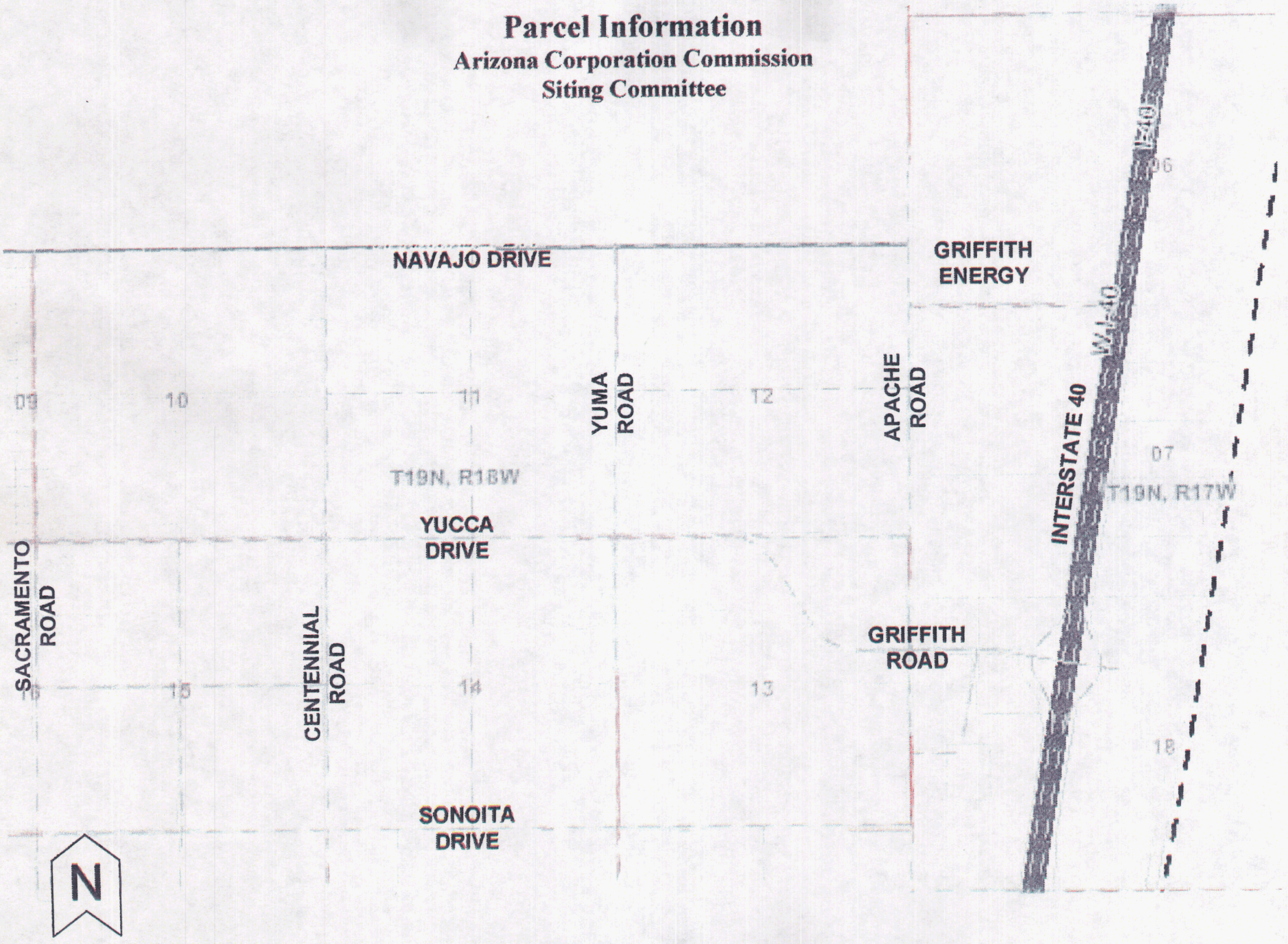

MOHAVE-002

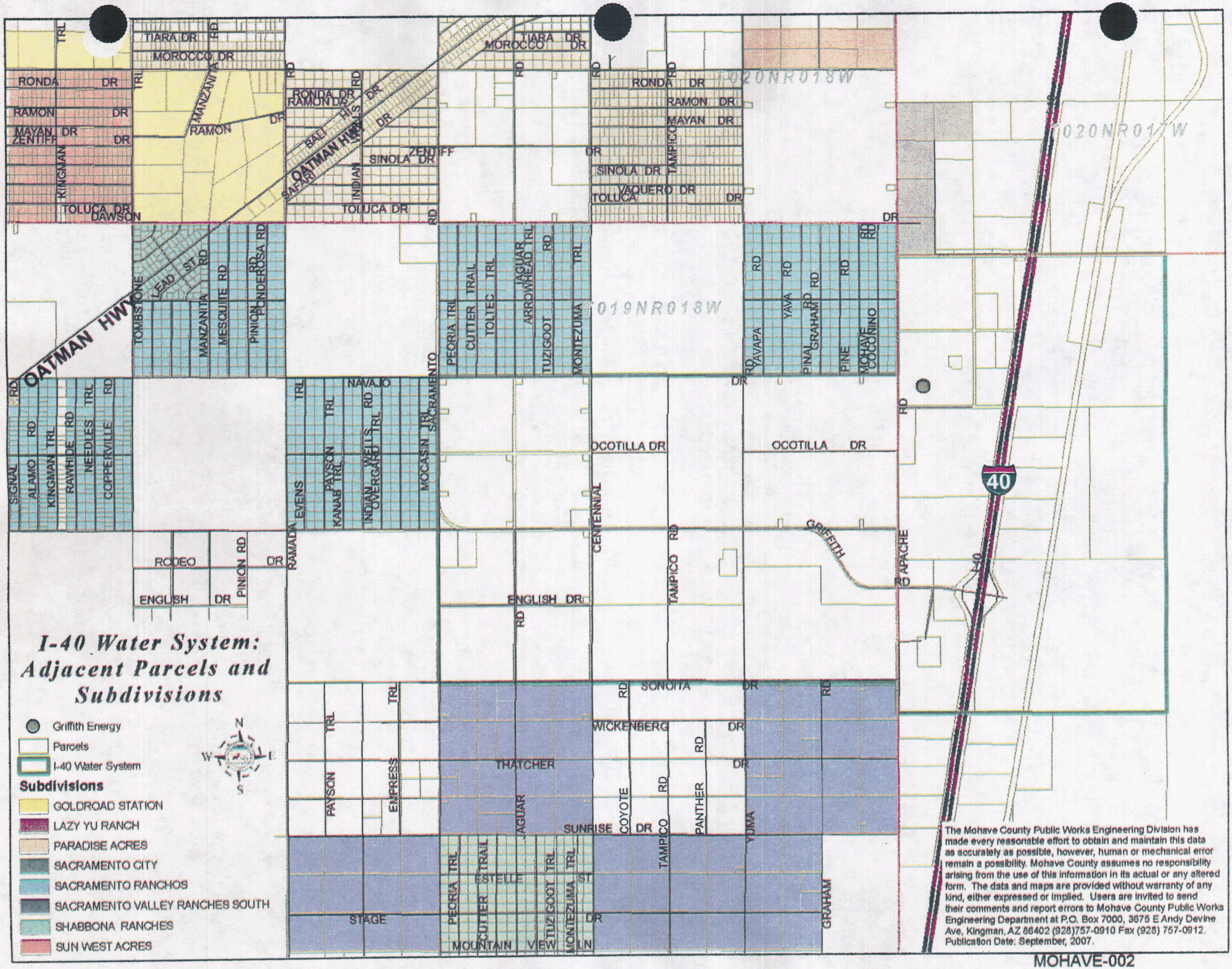

The Mohave County Public Works Engineering Division has made every reasonable effort to obtain and maintain this data as accurately as possible, however, human or mechanical error remain a possibility. Mohave County assumes no responsibility arising from the use of this information in its actual or any altered form. The data and maps are provided without warranty of any kind, either expressed or implied. Users are invited to send their comments and report errors to Mohave County Public Works Engineering Department at P.O. Box 7000, 3675 E Andy Devine Ave, Kingman, AZ 86402 (928)757-0910 Fax (928) 757-0912.
Publication Date: September, 2007.

MOHAVE-002

EXHIBIT
M-3
admitted

HYDROGEOLOGIC EVALUATION
Of
GOLDEN VALLEY
Mohave County, Arizona

FOR THE
MOHAVE COUNTY BOARD OF SUPERVISORS
GOLDEN VALLEY COUNTY IMPROVEMENT DISTRICT #1

by
Paul A. Manera
Manera, Inc.

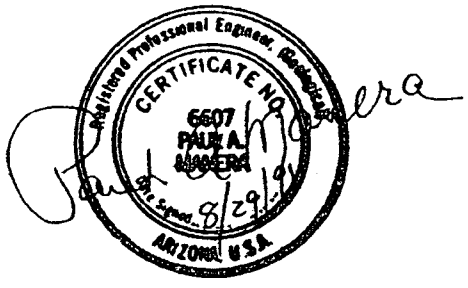

Revised August 29, 1991

MOHAVE-003

MANERA INC.

CONSULTANTS
IN WATER RESOURCES

August 29, 1991

Arizona Department of Water Resources
15 South 15th Avenue
Phoenix, AZ 85007

Attention: Mr. Steven Szyprowski

Re: Golden Valley County Improvement District #1

Gentlemen:

The Golden Valley County Improvement District #1 requests a review of the enclosed report to establish a letter of ground water availability for the projected 56,573 lots within the District.

As stated within the report, wells, transmission pipelines and storage facilities are already in place and in some cases the infrastructure to supply water to individual lots within some subdivisions is presently under construction. Therefore, applications for Certificates of Adequacy of the Water Supply should soon be filed with the Department.

Thank you for your immediate response.

Sincerely,

Paul A Manera

Paul A. Manera

cc: Mohave County Board of Supervisors

PAUL A. MANERA, P.E.
GEOLOGIST
GEOPHYSICIST

5251 N. 16TH STREET
SUITE 302 PHOENIX
ARIZONA 85016

(602) 263-0356

HYDROGEOLOGIC EVALUATION

OF

GOLDEN VALLEY

MOHAVE COUNTY, ARIZONA

for the

Mohave County Board of Supervisors

Golden Valley County Improvement District #1

by

Paul A. Manera

Manera, Inc.

Revised August 29, 1991

INTRODUCTION

The Sacramento Valley basin is located in Mohave County in northwestern Arizona and encompasses approximately 1,500 square miles. The basin is typical of the northwest-trending alluvial basins of the Basin and Range Province that consists of alluvium-filled basins separated by elongated fault-block mountain ranges (Rascona, 1991). The mountains bounding the basin are the Cerbat Mountains to the east and the Black Mountains on the west.

U.S. Highway 66, extending from Kingman to Oatman divides the Sacramento Valley. This report is primarily concerned with that portion of the basin north of U.S. Highway 66, which is locally referred to as Golden Valley. Golden Valley is further subdivided by Highway 68 into a northern third and southern two-thirds.

The Golden Valley County Improvement District #1 (GVCID #1) encompasses forty square miles located on the west side of Golden Valley, consisting of T. 21 N., R. 19 W. except for the six westernmost sections (Sections 6, 7, 18, 19, 30 and 31) and Sections 24 - 29 and 32 - 36 in T. 22 N., R. 19 W. as shown on Plate 1.

The Golden Valley County Improvement District #1 was organized in 1976. In late 1988, the District authorized the development of a master plan and implementation of water supply to satisfy the development of the GVCID #1. Sunrise Engineering, Inc. was selected as the Prime Engineer with Manera, Inc. to design and oversee the construction of the two water wells. The bonds to finance the construction of two wells, two storage tanks and the water distribution lines were sold in February, 1991.

The wells have been completed and tested, the storage tanks are in place and completion of construction and pressure testing of the pipeline is scheduled for November, 1991. Water delivery is scheduled to start in November, 1991.

DEMAND

Active Demand

At the time of authorization to proceed with the project, January 1991, there were approximately 450 homes in the District utilizing approximately 48 acre feet per year. With the exception of a few residents who had private wells, most of the homes were provided water through truck/trailer hauling operations.

Projected Number of Lots

Eight sections, Sections 4, 5, 8, 9, 16, 17, 20 and 32, T. 21 N., R. 19 W. are presently under the jurisdiction of the Bureau of Land Management (BLM) and one section, Section 32, T. 22 N., R. 19 W. is owned by the State of Arizona. The BLM expects to trade or sell all of these sections, with the exception of Section 32, T. 21 N., R. 19 W., within the next five (5) years and the State of Arizona expects to trade or sell Section 21, T. 22 N., R. 19 W. within the same time frame, therefore, thirty nine (39) of the forty (40) sections are considered in determining the demand of the GVCID #1

The thirty nine (39) sections are classified as:

	lots
15 fee sections with 2.5 acre lots which can be split once, 512 lots per section	7,680
14.65 fee sections with 3 lots per acre, 1920 lots per section	28,120
Valley Park Estates, single family	185
Shipp Estates, single family	279
Section 11, multifamily	595
Monte Carlo Village, mobile homes	185
Horizon Estates Tract 3030, multifamily	354
Liem Estates, multifamily	398
Crystal Springs	63
Crystal Springs II	123

Crystal Springs Estates III, single family	423
Villas de Estrella, multifamily	2,800
Projected lots, fee land	41,213
8.00 government sections with 3 lots per acre 1920 lots per section	15,360
Total projected lots	56,573

These projections includes the 3,963 lots previously awarded water adequacy (ADWR, December 11, 1987, Crystal Springs, Mohave County, Letter of Adequacy to Dept. of Real Estate).

Plate 1 illustrates the land classification and high density areas described above.

Projected Demand

The average daily demand utilized in these computations is 200 gallons per day per residential unit. The rationale for the use of this residential unit demand is:

1. the average daily demand per residential unit of the Dolan Springs Water Company ranges from 179 to 185 gallons (ADWR open files, Crystal Springs Water Co.;
2. The average daily demand established in Golden Valley Improvement District #1 is 96 gallons per residential unit (ADWR open files, Crystal Springs Water Co.;
3. ADWR estimated a daily demand of 200 gallons per residential unit in the Golden Valley area (ADWR open files, Memo, Szyprowski to Kleinman, 12/11/87, Crystal Springs Water Co.).
4. Allocation of 200 gallons per day per residential unit in the GVCID #1 Policy and Procedure Memorandum No. 90-1 (Appendix B)

Then the calculated demand is:

Fee land 200 (gpd/ru) X 41,213 (lots)/325,851
= 25.30 ac/ft/day

25.302 X 365 = 9,234.5 acre feet per year
(rounded to 9,235 acre feet per year)

Federal and State Land

200 (gpd/ru) X 15,360 (lots)/325,851
= 9.43 ac/ft/day

9.43 X 365 = 3,441.95 acre feet per year
(rounded to 3,442 acre feet per year)

For a total projected annual demand of:

9,235 + 3,442 = 12,673 acre feet

with a one hundred (100) year demand of:

12,673 X 100 = 1,267,300 acre feet.

SUPPLY

Wells

Two production wells were constructed within the GVCID #1 boundaries as the initial water supply for the GVCID #1. The locations of these wells are:

Well 1	SE¼,SE¼,SE¼ of Section 13, and;
Well 2	NE¼,NE¼,NE¼ of Section 25, T. 21 N., R. 19 W.

Storage Facilities

Two storage tanks were constructed to service the initial development of the GVCID #1. These storage facilities are:

Storage Tank "A"	750,000 gallon reservoir located in the SW¼,SE¼,SE¼ of Section 36, T. 22 N., R. 19 W.
Storage Tank "B"	300,000 gallon reservoir located in the SE¼,SE¼,SE¼ of Section 28, T. 21 N., R. 19 W.

Storage Tank "A" will initially supply Pressure Zone C-1 and later will supply other areas in the northern portion of the District. Storage Tank "B" is scheduled to supply those areas in the southernmost fifteen sections.

Pipelines

Twenty three and one half miles of transmission pipelines are under construction as the initial phase of development of the GVCID #1. More than twenty miles of these pipelines are presently in the ground and the remaining footage will be completed by the first of November. The transmission lines consist of:

8 inch diameter	4.25 miles
10 inch diameter	8.00
12 inch diameter	6.50
14 inch diameter	1.50
16 inch diameter	1.50
18 inch diameter	1.00
24 inch diameter	.75
Total Transmission Pipeline	23.50 miles

A number of distribution lines within the individual areas of development are being constructed by developers concurrently with the transmission pipeline construction.

The locations of the wells, storage reservoirs and transmission pipelines are illustrated on Plate 1.

HYDROGEOLOGY

Geology

The mountains bounding the Golden Valley portion of the Sacramento Valley consist of intrusive and metamorphosed PreCambrian igneous rocks in the Cerbat Mountains to the north and east. Cretaceous and Tertiary volcanic rocks are present in the Black Mountains to the west and the southern end of the Cerbat Mountains on the southeast. These volcanic rocks include basalt flows, basaltic andesite flows, rhyolite and rhyolite tuffs (Wilson and Moore, 1959).

The basin is bounded by step faulting on both the east, the basin - Cerbat Mountains boundary, and the west, the basin - Black Mountains boundary. The thickness of the alluvial fill in the middle of the Sacramento Valley, near the south end of Golden Valley, has been estimated to exceed 4,000 feet (Gillespie & Bentley, 1971, Plate 2).

The alluvial deposits in the basin have been divided into older, intermediate and younger units by Gillespie and Bentley (1971). These units are reflected in the Geologic Cross Section A-A', Figure 1. The younger unit is easily identified across the cross-section as is the intermediate unit. The contact between the intermediate unit and the older unit is evident on the northwestern end of the cross section near the mountains but becomes somewhat obscure toward the middle of the basin.

Review of the lithologic logs of wells in Golden Valley strongly suggests that the lateral variation in these units is great. An example of this lateral variation can be observed between Valley Pioneer Well 4 (NW¼,NE¼,NE¼ of Section 8, T. 21 N., R. 18 W.) in which the three units are present, but the materials represented in the drill cutting samples are all, but a few particles below 1,030 feet, granitic sands and gravels with clay while in the GVCID #1 wells in which the majority of the materials in the three units are volcanic sands, gravels and clays, although fine grained quartz sands are present. The reason for this variation can be explained by the source area of the sediments, with granitic and metamorphic materials eroded by the relatively high runoff of the Cerbat Mountains carried to the northern and eastern portions of the basin while the volcanic materials of the Black Mountains to the west and southern end of the Cerbat Mountains to the southeast of Golden Valley provides the source for the basin materials on the west side and south in the basin.

The lithologic logs for the two new production wells are included as Appendix C. The downhole logs of Well 1 are illustrated in Figure 2 and the downhole logs of Well 2 are included in the pocket with this report.

Well Characteristics

Two production wells were constructed and tested to supply water for the initial development of the Golden Valley County Improvement District #1. Additional wells will be drilled to maintain a demand-supply ratio which will allow growth to continue as housing demand occurs.

Well 1

SE¼, SE¼, SE¼ of Section 13, T. 21 N., R. 19 W.

Total Depth 1,335 feet.

Bore and Casing Diameter 26 inches x 16 inches.

Golden Valley County Improvement District No.1

GEOLOGIC CROSS-SECTION A-A'

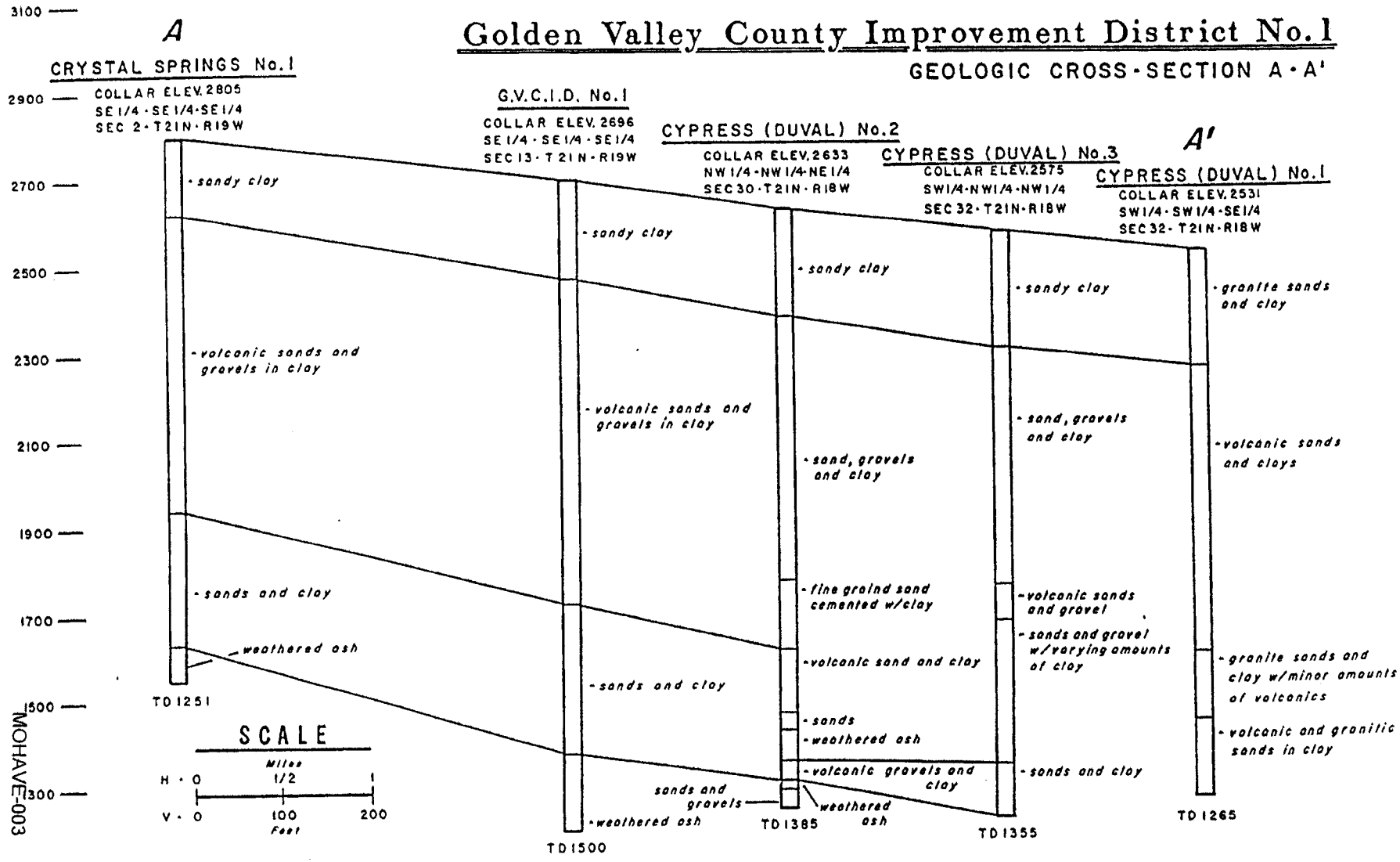

MANERA, INC.
Consultants in Water Resources
5251 N. 16th STREET, SUITE 302
PHOENIX, ARIZONA 85016-3215
TELEPHONE (602) 263-0356

FIGURE 1

FIGURE 2

DOWNHOLE LOG

by

CENTURY GEOPHYSICAL COMPANY

Wellname PROCESSED WELL NO. 1
Filename GVCIDFF
Location GVCID #1
Elevation 0 Reference

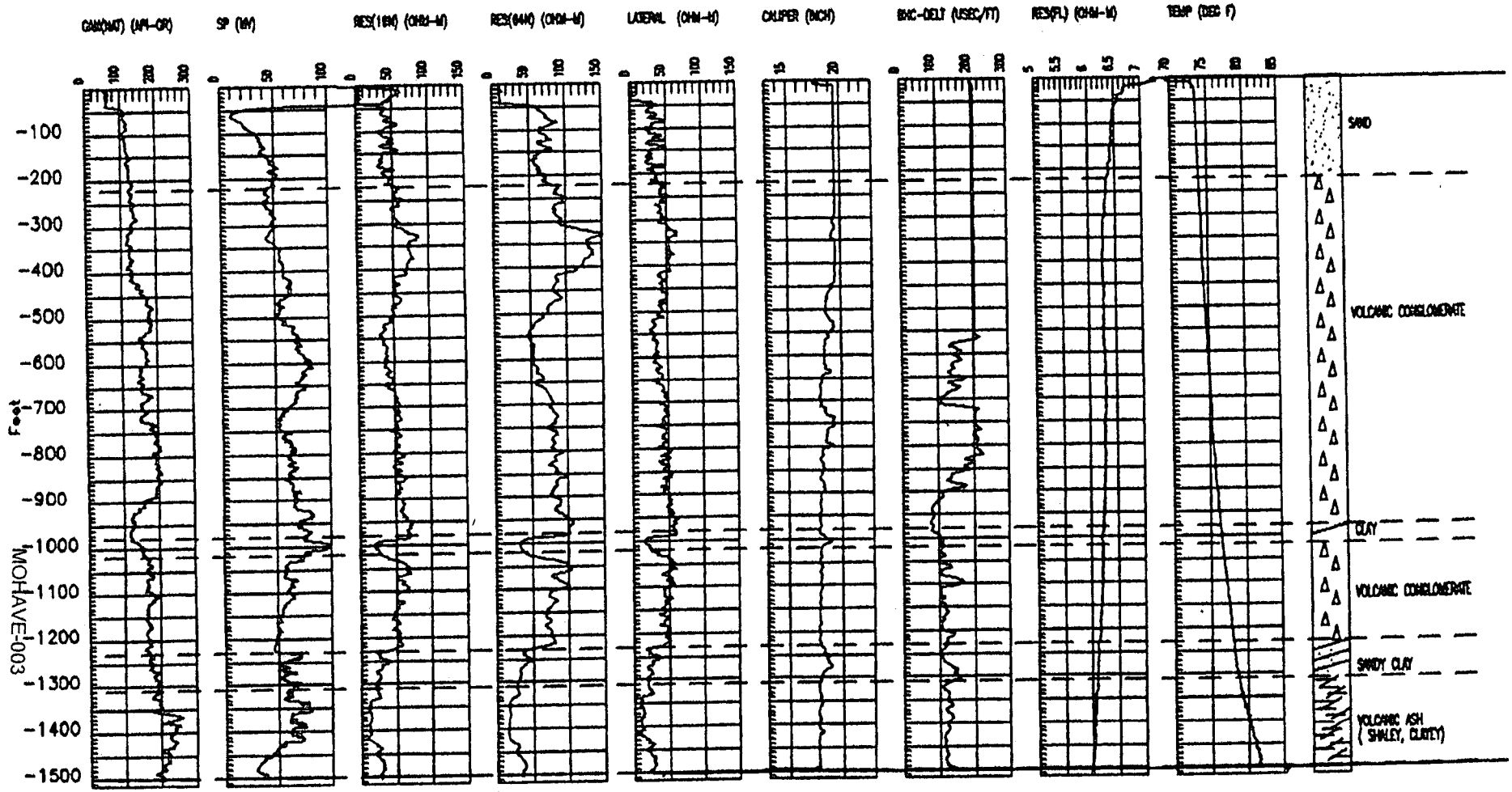

Perforated Area	2.5 x 1/8th inch cuts, 60 cuts per foot, 900 feet to 1,330 feet.
Static Water Level	921 feet.
Yield and Drawdown	689 gpm with 76 feet.
Water Temperature	39 degrees C.

Well 2

NE¼, NE¼, NE¼ of Section 25, T. 21 N., R. 19 W.

Total Depth 1,230 feet.

Bore and Casing Diameter 26 inches x 16 inches.

Perforated Area	2.5 x 1/8th inch cuts, 60 cuts. per foot, 875 feet to 1,225 feet.
Static Water Level	866 feet.
Yield and Drawdown	704 gpm with 38 feet.
Water Temperature	39 degrees C.

Withdrawal

Withdrawal from the Sacramento Valley ground water aquifer has been estimated at 119,000 acre feet during the period 1964 - 1990 (26 years) (Rascona, 1991). During the period, 1964 - 1980, 95 percent of the withdrawal of 96,000 acre feet or 91,200 acre feet was from the aquifer within the Golden Valley portion of the Sacramento Valley. The majority of this withdrawal was from the Cyprus (Duval) Well Field (withdrawal from the Cyprus (Duval) Well Field was 3,500 gpm for the 16 year period, 1964 - 1980, for a total 90,328 acre feet). During the last ten years it is estimated that approximately one quarter of the withdrawal of 22,000 acre feet from the Sacramento Valley was from the Golden Valley portion of the aquifer. Thus, approximately 96,700 acre feet of the total withdrawal of 119,000 acre feet from the Sacramento Valley aquifer occurred in the Golden Valley portion of the aquifer, during the 26 year period, 1964 - 1990.

Water Level Changes and Rates of Decline

The water levels measured in the deep wells in Golden Valley in 1964 and 1990 are given in Table 1 (ADWR Open Files). The average annual rates of decline were calculated for each of the wells in the basin (shown on Table 1). An average annual rate of decline for the basin was calculated by averaging the rate of decline of all the wells. In most cases the length of measurement was roughly 26 years. The range of the average annual rates of decline is 0.2277 feet to 1.1602 with one anomaly of 0.0882 in a relatively new well (6.8 years). Based on these rates of decline, the average annual rate of decline for the Golden Valley portion of the Sacramento Valley was calculated to be 0.6694 feet or if the anomaly is removed, 0.7525 feet. All further calculations will be based on the more conservative basinwide annual rate of decline of 0.7525 feet.

Rascona (1991) cites a decline of 26 feet in an 11 year period (1979-1990) giving an annual rate of decline of 2.37 feet in one public supply well north of Highway 68. The lithologic logs of wells in that area clearly demonstrate that the aquifer contains large amounts of clays and that the subsurface materials are moderately to strongly cemented in the area of this well. Further, as a public supply well, the pumping cycle has frequent on-off periods, thus, the cone of depression surrounding this well does not have an opportunity to completely recover to the true static water level. Consequently, it is believed that this well and the proported rapid rate of decline of the water level in this well is not characteristic of the basin as a whole. This conclusion appears reasonable as another of the Valley Pioneer Water Company wells, also a public supply well, north of Highway 68 (SE¼,NW¼,NW¼ of Section 9, T. 21 N., R. 18 W.) reflects an annual rate of decline of only 1.1647 feet for the 25.5 year period, 1964 -1990 and many other wells in the basin have even smaller rates of decline in the water level.

The fact that the withdrawal from the basin was much larger during the first sixteen (16) years of the period of withdrawal than the last nine (9) years is of little importance on the rate of decline. All aquifers are known to average the effect of withdrawal over time, therefore, the fact that the heavy withdrawal occurred in the early years and smaller volumes of withdrawal have occurred during the latter years has allowed the cone of depression of the well field to recover to reasonable equilibrium. Actually, this form of withdrawal probably gives a better rate of true decline than if the volumes of withdrawal were reversed.

Table 1

Water Levels in the Northern Portion of the Sacramento Valley (Golden Valley)

Data taken from the open files of the Arizona Department of Water Resources.

	Altitude of Land Surface (Feet)	Water Level (Feet)	Date Water Level Measured	Altitude of Water Surface (Feet)	Years of Measurement	Average Annual Rate of Decline (Feet)
T. 20 N., R. 18 W.						
NW, NW, NW Section 4 Cyprus (Duval) #5	2524.0	736.76	10/13/1964	1787.24		
		736.52	11/30/1964	1787.48		
		738.00	04/27/1965	1786.00		
		742.60	09/22/1965	1781.40		
		748.70	02/14/1968	1775.30		
		742.30	01/26/1971	1781.70		
		743.60	01/27/1971	1780.40		
		749.70	03/21/1990	1774.30	25.5	0.5075
SW, NE, NE Section 22	2495.0	738.31	05/04/1964	1756.69		
		737.57	12/31/1964	1757.43		
		737.54	11/29/1965	1757.46		
		737.70	03/31/1966	1757.30		
		737.25	02/16/1967	1757.75		
		738.69	02/14/1968	1756.31		
		740.68	01 21 1971	1754.32		
		740.67	0z/27/1972	1754.33		
		732.90	01/18/1973	1762.10		
		738.77	01/23/1974	1756.23		

Water Level Table
Sacramento (Golden) Valley
Page Two

		740.05	02/16/1977	1754.95		
		740.90	01/15/1976	1754.10		
		741.40	01/16/1977	1753.95		
		743.30	02/06/1979	1751.70		
		738.70	03/04/1980	1756.30		
		744.40	02/10/1982	1750.60		
		741.20	02/10/1983	1753.80		
		738.90	01/17/1984	1753.10		
		743.80	01/16/1985	1751.20		
		744.10	01/29/1986	1750.90		
		744.60	01/14/1987	1750.40		
		744.70	01/12/1988	1750.30		
		744.80	01/11/1989	1750.20		
		744.80	02/01/1990	1750.20		
		744.30	11/13/1990	1750.70		
		744.40	02/12/1991	1750.60	26.75	0.2277
T. 21 N., R. 18 W.						
NE, NE, NW Section 9 Valley Pioneer Water Company	2832	1025.10	04/27/1965	1806.90		
		1026.30	08/08/1966	1805.70		
		1026.00	02/16/1967	1806.00		
		1025.00	02/14/1968	1807.00		
		1026.80	01/30/1969	1805.20		
		1025.55	01/28/1970	1806.45		
		1025.75	01/28/1971	1806.25		
		1034.50	01/27/1972	1797.50		
		1025.50	01/19/1973	1806.50		
		1012.90	01/22/1974	1819.10		
		1036.90	01/23/1975	1795.10		
		1028.15	01/16/1976	1803.85		
		1028.60	03/05/1979	1803.40		

Water Level Table
Sacramento (Golden) Valley
Page Three

		1046.50	02/11/1982	1785.50		
		1045.00	02/11/1983	1787.00		
		1054.80	11/08/1990	1777.20	25.6	1.1602
NE, NE, SW	2663.0	870.18	10/13/1964	1792.82		
Section 20		885.40	02/16/1967	1777.60		
Cyprus (Duval) #4		888.70	01/22/1971	1774.30		
		893.80	03/20/1990	1769.20	25.4	0.9299
SW, SW, NW	2664.0	897.00	01/16/1984	1767.00		
Section 21		900.50	01/15/1985	1763.50		
		899.10	01/29/1986	1764.90		
		899.50	01/14/1987	1764.50		
		898.60	01/12/1988	1765.40		
		898.10	01/11/1989	1765.90		
		897.70	03/09/1990	1766.30		
		897.60	03/20/1990	1766.40		
		897.60	11/08/1990	1766.40	6.8	0.0882
NW, NW, NE	2633.0	845.60	10/13/1964	1787.40		
Section 18		857.20	01/28/1970	1775.80		
Cyrpus (Duval) #2		859.72	01/22/1971	1773.28		
		864.20	01/27/1972	1768.80		
		875.00	05/31/1990	1758.00	25.6	1.1487

Water Level Table
Sacramento (Golden) Valley
Page Four

NW,NW,NW Section 32 Cyprus (Duval) #3	2578.0	792.83	10/13/1964	1785.17		
		794.15	11/30/1964	1783.85		
		806.60	02/16/1967	1771.40		
		806.10	01/30/1969	1771.90		
		810.40	05/31/1990	1767.60	25.6	0.6863
SW, SW, SE Section 32 Cyprus (Duval) #1	2531.0	750.86	10/13/1964	1780.14		
		749.67	11/30/1964	1781.33		
		759.00	03/31/1966	1772.00		
		774.00	03/23/1972	1757.00		
		766.40	05/31/1990	1764.60	25.6	0.6070

Recharge

Rascona (1991) estimated that the ground water outflow of the basin is 1,000 acre feet per year. Normally, the recharge equals the outflow of the basin. Assuming this is true in the Sacramento Valley, the recharge to the basin is about 1,000 acre feet per year. Golden Valley constitutes approximately one third of the Sacramento Valley, therefore, the expected recharge in the Golden Valley area is one third of 1,000 acre feet or 333 acre feet per year.

Withdrawal From Storage

Subtracting the recharge, 8,658 acre feet (333 x 26), from the total withdrawal gives the volume of withdrawal from storage.

96,700 - 8,658 = 88,042 / 26 = 3,386 acre feet per year

Thus, withdrawal of 3,386 acre feet of water per year causes a rate of decline in the water level in the Golden Valley aquifer of 0.7525 feet per year.

Transmissivity (T)

The transmissivities of the aquifer penetrated by the vertical axes of the surface points of Wells 1 and 2 were calculated from the drawdown measurements collected during the 72 hour constant rate pumping test run on each well. Figures 3 and 4 show the calculations. The transmissivities calculated are 17,000 gpd/ft for Well 1 and 37,000 gpd/ft for Well 2. The pumping test field data is included as Appendix D.

Dividing the transmissivities by the specific capacity gives a constant for the Theis estimate of T of 1,800 for the Golden Valley portion of the Sacramento Valley. Utilizing this Theis estimate of T, the transmissivities of the Cyprus (Duval) wells were calculated and are shown on Table 2.

Toy (1987) estimated transmissivities of 27,000 gpd/ft in a well located in the NW¼, NW¼, NW¼ of Section 8, T. 21 N., R. 18 W. and 10,000 gpd/ft in a well located in the SE¼, NW¼, SE¼ of Section 5, T. 21 N., R. 18 W.

Thus it appears that the range of transmissivities in aquifer in the central portion of the Golden Valley basin ranges from approximately 8,000 gpd/ft to 37,000 gpd/ft.

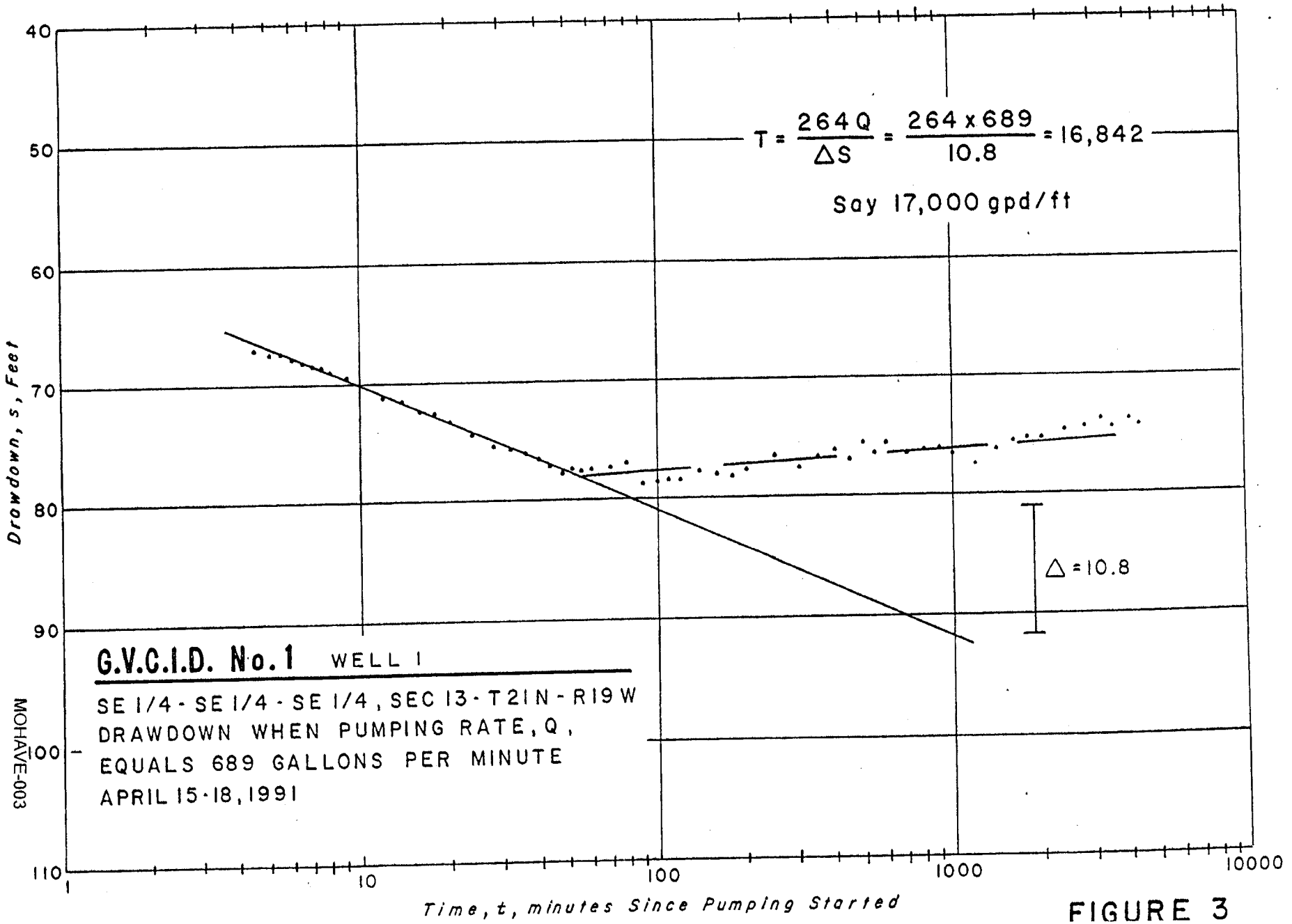
40
50
60
70
80
90
100
110
1
10
100
1000
10000
Drawdown, s, Feet
Time, t, minutes Since Pumping Started
$T = \frac{264Q}{\Delta S} = \frac{264 \times 689}{10.8} = 16,842$
Say 17,000 gpd/ft
Δ = 10.8
G.V.C.I.D. No. 1 WELL 1
SE 1/4 - SE 1/4 - SE 1/4, SEC 13 - T 21 N - R 19 W
DRAWDOWN WHEN PUMPING RATE, Q,
EQUALS 689 GALLONS PER MINUTE
APRIL 15-18, 1991
MOHAVE-003

FIGURE 3

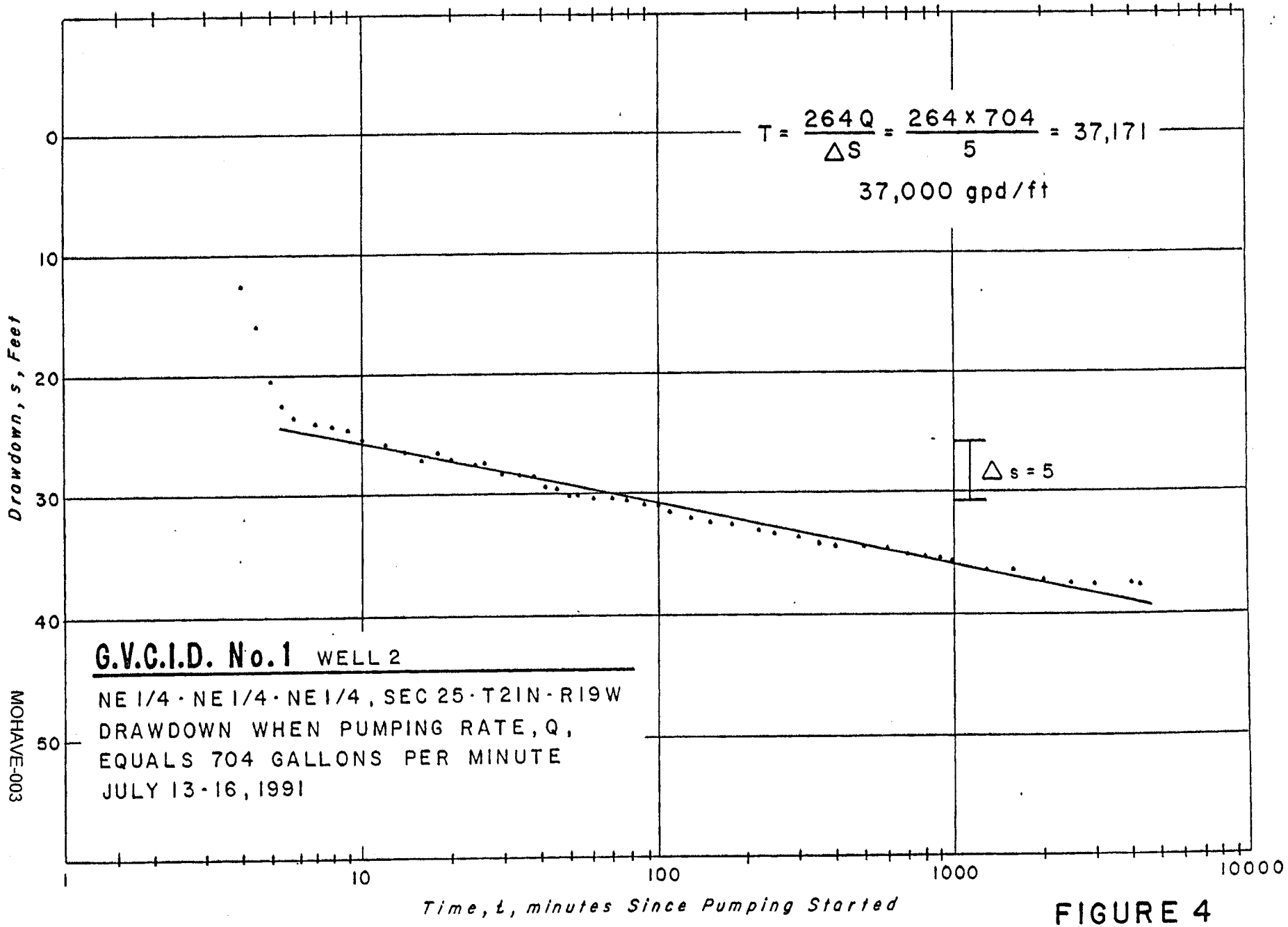
$T = \frac{264Q}{\Delta S} = \frac{264 \times 704}{5} = 37{,}171$
37,000 gpd/ft
Δs = 5
0
10
20
30
40
50
Drawdown, s, Feet
1
10
100
1000
10000
Time, t, minutes Since Pumping Started
G.V.C.I.D. No.1 WELL 2
NE 1/4 · NE 1/4 · NE 1/4, SEC 25 · T21N · R19W
DRAWDOWN WHEN PUMPING RATE, Q,
EQUALS 704 GALLONS PER MINUTE
JULY 13-16, 1991
MOHAVE-003

FIGURE 4

TABLE 2

Well Characteristics and Aquifer Parameters

in the Northern Half of the Sacramento Valley (Golden Valley)

Data taken from drillers' files and field tests.

Well	Perf	Q	SWL	DD	SC	EST	K	DATE
Duval 1	365	642	730	133	4.83	8742	23.95	3/66
Duval 2	270	720	860	152	4.74	8579	31.78	10/64
Duval 3	163	838	820	192	4.36	7892	48.41	2/67
Duval 4	170	910	910	56	16.25	29413	173.01	10/64
Duval 5	300	1300	725	64	20.31	36761	122.53	10/64
GV 1	409	689	921	74	9.31	15827	38.69	4/91
GV 2	350	712	866	35	20.34	37171	106.20	7.91

Where:

Perf. Area	Lineal feet of perforated casing in well
Q	Rate of Discharge
SWL	Static Water Level
DD	Drawdown of water level during pumping
SC	Specific capacity of well (Q/DD)
T	Trasnmissivity of aquifer at well
K	Permeability (T/Perf. Area)

Chemistry of the Ground Waters

The ground waters from both wells constructed to supply the demand for the Golden Valley County Improvement District #1 fall within the inorganic and radiometric parameters set by the Arizona Department of Environmental Quality (ADEQ) for human consumption. The analyses of these waters are included as Appendix E.

Available chemical analyses indicate that the total dissolved solids content of ground waters from wells in the Golden Valley portion of the Sacramento Valley aquifer range from 170 to 420 milligrams per liter (mg/l).

IMPACT

The average annual rate of withdrawal of 3,719 acre feet for the past 26 years has resulted in an average annual rate of decline of 0.7525 feet in the Golden Valley portion of the Sacramento Valley. Three hundred and thirty three (333) acre feet of that average annual withdrawal is replaced by recharge resulting in a withdrawal of 3,386 acre feet from storage.

The projected annual demand for the 41,213 units on the fee land within the Golden Valley County Improvement District #1 is 9,235 acre feet. Subtracting the recharge of 333 acre feet leaves 8,902 acre feet withdrawn from storage.

The projected annual demand for the 15,360 lots on the federal and state land within the GVCID #1 is 3,442 acre feet, giving a total projected additional annual withdrawal from the Golden Valley aquifer of:

8,902 + 3,442 = 12,344 acre feet

Dividing the annual demand withdrawn from storage by the present annual volume withdrawn from storage gives the ratio of impact on the aquifer. Thus:

Fee land	8,902 / 3,386 = 2.6291
Government land	3,442 / 3,386 = 1.0165
Total ratio of impact	3.6456

Present water usage within the GVCID #1 is overlapped by the projected use, then:

48 acre feet / 550 acre feet = .0873

or nine (9) percent of the projected rate of decline in the water level is accounted for by present withdrawal.

Thus, the impact of additional withdrawal is calculated as:

Fee land	2.6291 X 0.7525 =	1.9784 feet per year
Government land	1.0615 X 0.7525 =	0.7988 feet per year
Total projected additional impact		2.7772 feet per year
Adding the present rate of decline		0.7525 feet per year
Subtracting the overlap of 9 percent		0.0873 feet per year
Total projected annual decline		3.4424 feet per year

or 344 feet in the one hundred (100) year period giving a projected static water level of:

895 + 344 = 1,239 feet (between GVCID#1 Wells 1 and 2)

Considering that these projections are based on immediate buildout which will not be complete for a number of years, the actual one hundred (100) year impact on the aquifer will be less than projected herein.

CONCLUSIONS

The Golden Valley portion of the Sacramento Valley ground water reservoir is sufficiently large to supply the demand of 1,267,700 acre feet required for the development of the Golden Valley County Improvement District #1 during the next 100 years.

The range of transmissivities in the basin are sufficient to allow the water in the ground water reservoir to flow to the points of withdrawal within the boundaries of the GVCID #1.

The long term development time frame will automatically build in a safety factor as full buildout will not be in place for a period of ten or more years which will

reduce the projected withdrawal significantly in the early years of the development.

The chemical quality of the ground waters in the Golden Valley portion of the aquifer falls within the ADEQ parameters of waters useable for human consumption.

The construction of GVCID #1 Wells 1 and 2 has proven that the Golden Valley aquifer extends farther west than formerly thought. It is believed that the aquifer extends far enough westward to allow sufficient well sites within the District for the development of a well field capable of supplying the total demand of GVCID #1.

REFERENCES

ADWR, Crystal Springs Water Company, Open Files, Phoenix, Arizona.

ADWR, Water level measurement files, Phoenix, Arizona.

Dings. McClelland G., 1951, The Wallapai Mining District, Cerbat Mountains, Mohave County, Arizona. U. S. Geological Survey Bulletin 978-E, Washington, D. C.

Geo/Resource Consultants, Inc., 1982, Groundwater Resources and Water Quality of Detrital and Hualapai Basins, Mohave County, Arizona. U. S. Bureau of Land Management Report 263-1H/BLM, Denver, Colorado.

Gillespie, J. B. and C. B. Bentley, 1971, Geohydrology of Hualapai and Sacramento Valleys, Mohave County, Arizona. U. S. Geological Survey Water Supply Paper 1899-H, Washington, D. C.

Gillespie, J. B., C. B. Bentley and William Kam, 1966, Basic Hydrologic Data of the Hualapai, Sacramento and Big Sandy Valleys, Mohave County, Arizona. Arizona State Land Department Water Resources Report Number Twenty-Six, Phoenix, Arizona.

Lee, Willis T., 1908, Geologic Reconnaissance of a Part of Western Arizona. U. S. Geological Survey Bulletin 352, Washington, D. C.

Pfaff, C. L. and D. M. Clay, 1981, Map Showing Ground-Water Conditions in the Sacramento Valley Area, Mohave County, Arizona - 1979. U. S. Geological Survey Water-Resources Investigations Open-File Report 81-418, Tucson, Arizona.

Rascona, S. J., 1991, Map Showing Groundwater Conditions in the Sacramento Valley Basin, Mohave County, Arizona - 1991. Arizona Department of Water Resources Report Number 21, Phoenix, Arizona.

Schrader, F. C., 1909, Mineral deposits of the Cerbat Range, Black Mountains, and Grand Wash Cliffs, Mohave County, Arizona. U./ S Geological Survey Bulletin 397, Washington, D. C.

Syzprowski, Steven, December 11, 1987, Memorandum to Dr. Alan P. Kleinman, Crystal Springs Water Company files, ADWR, Phoenix, Arizona.

Toy, Doug, September 9, 1987, Memorandum to Dr. Alan P. Kleinman, ADWR, Phoenix, Arizona.

U. S. Department of Interior, Water and Power Resources Service, 1981, Ground Water Manual, Government Printing Office, Denver, Colorado.

Wallace, Greg., December 11, 1987, Crystal Springs, Mohave County, Letter of Adequacy to Dept. of Real Estate, Arizona Department of Water Resources, Phoenix, Arizona.

APPENDIX A

APPLICATION FOR A SUBDIVISION WATER ADEQUACY STATEMENT

DWRH-03-85

FOR DEPARTMENT USE ONLY
Registry No. _____
Date Received _____
Received By _____

Arizona Department of Water Resources
15 South 15th Avenue
Phoenix, Arizona 85007

APPLICATION FOR A SUBDIVISION WATER ADEQUACY STATEMENT

Part A

WATER SUPPLY INFORMATION

1. Name of Development Golden Valley County Improvement District # 1
2. Location See attached Page A2
   Township Range Section(s) County
3. Number of Lots 56,573 Size of Lots 1/3 to 5 acres Total Acreage 24,960
4. Proposed Use of Development:
   Residential X Recreation _____ Industrial _____ Minifarm _____ Other (specify): multifamily
5. Development (Parcel) Water Demand:
   Projected Water Demand per Lot 200 Gallons Per Day
   Total Projected for Development 12,673 Acre-Feet/Year
6. Additional Use of Water:
   Golf Courses _____ Lakes _____ Parks _____ Other: _____
   Projected Demand for Additional Use -0- Gallons Per Day
   -0- Acre-Feet/Year
7. Method of Providing Water:
   Water Company _____ Municipal System X Individual Well _____ Other: _____
8. Water Source:
   Groundwater X Surface Water _____ CAP Water _____
9. Water Source Location:
   Supply Well(s) (Reference Part C) Wells 1 and 2
   Surface Water Diversion Point(s) _____
10. Address Information:
    Municipality or Water Company:
    Golden Valley County Improvement District #1 % Mohave County Board of Supervisors
    Name Address Phone

    Developer:
    Mohave Co. Bd of Supervisors, 809 E. Beale St., Kingman, AZ 86402 (602) 753-0729
    Name Address Phone

    Technical Consultant:
    Manera, Inc. 5251 N. 16th St., Suite 302, Phoenix, AZ 85016 (602) 263-0356
    Name Address Phone
11. Attach subdivision plat.
12. Attach a copy of the service agreement or similar document if water is to be provided by a company or municipality and fill out Part B.
13. Provide evidence of contracts for delivery or rights to water as required.
14. If groundwater is the proposed source of supply, provide a copy of a hydrological study on the groundwater resources which demonstrates an adequate water supply.

2. Location

T. 21 N., R 19 W.

Sections 1 - 5, 8 - 17, 20 - 29, 33 - 36

T. 22 N., R. 19 W.

Sections 25 - 29 and 32 - 36

Shown on Plate 2

Part B

WATER COMPANY/MUNICIPAL SYSTEM WATER SUPPLY INFORMATION

1. Name of Water Company or Municipality: Golden Valley County Improvement District #1

2. Annual Water Company or Municipality Demands

Units: Acre feet

USE	Current	Committed	Projected	TOTAL
Municipal	48	839.83	11,785.17	12,673
Industrial				
Agriculture				
Golf Courses				
Lakes				
TOTALS	48	839.83	11,785.17	12,673

3. Supply:

Surface Water[1]: Water Right Amount _____

Critical Low Flow Amount _____

Mean Annual Flow _____

Groundwater: Provide individual well data on additional Well Survey Forms (Part C)

4. Availability:

Surface Water: Describe Availability of Flow _____

Groundwater: Depth to Water: Well 2 - 866 ft Well 1 - 921 ft

Current Rates of Decline: Basin Average 0.7525 ft/yr

Describe projected effects of total water demand on water levels:

Withdrawal of 12,673 acre feet per year for 100 years will cause a decline in the water level of 249.52 feet. Projected water levels near wells are 1,220 feet at the end of the 100 year period.

MOHAVE-003

[1]Provide evidence of legal right to use surface water.

Part C

WELL SURVEY INFORMATION
(Use separate sheet for each well)

Local Well Number B(21-19)25 aaa GRID #1 Well 2

Location (to nearest ten acres):

Section 25 Township 21 North Range 19 West

NE ¼, NE ¼, NE ¼.

Well Type:

Domestic _____ Irrigation _____ Industrial _____

Stock _____ Public Supply X Abandoned _____

Other (Specify): _____

Well Construction Data:

Date Drilled June-July 1991 Perforation Type Saw Cut

Well Depth 1,230 feet Perforation Size 2½ x 1/8

Original Water Level 866 feet Depth Perforated: from 875 feet

Casing Diameter 16 inches to 1,225 feet

Present Data:

Static Water Level 866 feet Pumping Rate 704 gpm

Pumping Level 904 feet Drawdown 38 feet

Quality[1]: TDS 280 mg/l Fluorides 1.4 mg/l Other _____

Historic Data for Last Five Years

Date (Month/Year)				
7/91				
Depth to Water (ft)				
866				

Year				
1991				
Annual Pumpage Amt. (Specify Units)				
-0-				

UNITS _____

MOHAVE-003

[1]Attach chemical analyses.

Part C

WELL SURVEY INFORMATION
(Use separate sheet for each well)

Local Well Number B(21-19)13ddd GVID #1 Well 1

Location (to nearest ten acres):

Section 13 Township 21 North Range 19 West

SE ¼, SE ¼, SE ¼.

Well Type:

Domestic ____ Irrigation ____ Industrial ____

Stock ____ Public Supply X Abandoned ____

Other (Specify): ____

Well Construction Data:

Date Drilled April 1991 Perforation Type Saw Cut

Well Depth 1,335 feet Perforation Size 2½ x 1/8 inches

Original Water Level 921 feet Depth Perforated: from 900 feet

Casing Diameter 16 inches to 1,330 feet

Present Data:

Static Water Level 921 feet Pumping Rate 689 gpm

Pumping Level 998 feet Drawdown 77 feet

Quality[1]: TDS 250 mg/l Fluorides 0.7 mg/l Other ____

Historic Data for Last Five Years

Date (Month/Year)				
4/91				
Depth to Water (ft)				
921				

Year				
1991				
Annual Pumpage Amt. (Specify Units)				
-0-				

UNITS ____

MOHAVE-003

[1]Attach chemical analyses.

Part D

FEE SCHEDULE FOR APPLICATION AND REVIEW

In evaluating applications for subdivision water adequacy statements, the Department of Water Resources is required to collect application and review fees in accordance with the fee schedule given below, pursuant to A.C.R.R. R12-15-151. Please fill out the table below in its entirety and include the total fees with your application. Payment may be made by cash, check or, in some cases, by entry in an existing Department fee credit account. Checks should be made payable to the Department of Water Resources. FAILURE TO ENCLOSE THE REQUIRED FEES WILL CAUSE THE APPLICATION TO BE RETURNED.

	Item		Rate	No. of Lots	Amount
APPLICATION FEE:	All Applications		$50.00/App	-	$50.00
REVIEW FEES:	First	20 lots	0.00/lot	20	0.00
	Next	80 lots	1.00/lot	80	80.00
	Next	900 lots	0.50/lot	900	450.00
	Next	9,000 lots	0.25/lot	9,000	2,250.00
	Over	10,000 lots	0.10/lot	42,610	4,261.00
	TOTAL			52,610	$7,091.00

56,573 - 3,963 = 52,610 new lot application

Example: A subdivision consisting of 200 lots would be assessed fees as follows:

	Item		Rate	No. of Lots	Amount
APPLICATION FEE:	All Applications		$50.00/App	-	$ 50.00
REVIEW FEES:	First	20 lots	0.00/lot	20	0.00
	Next	80 lots	1.00/lot	80	80.00
	Next	900 lots	0.50/lot	100	50.00
	Next	9,000 lots	0.25/lot	0	0.00
	Over	10,000 lots	0.10/lot	0	0.00
	TOTAL				$180.00

APPENDIX B

GVID #1

POLICY & PROCEDURE MEMORANDUM

NO. 90 - 1

GVID #1

POLICY & PROCEDURE MEMORANDUM
No. 90-1

Article 1 - Preamble

Section 1.1 The Golden Valley Improvement District through its Board of Directors establishes the following policies and procedures. They are intended to outline the intent of the Board with regard to the entire operation of the District. The Board realizes the wishes of the residents of the District may change from time to time and anticipates corresponding changes to these policies.

Section 1.2 The water utility the GVID has constructed will be operated in an efficient, economic and environmentally sound manner, in accordance with all Federal, State and Local rules and regulations. The District will provide safe drinking water in conformance with all the regulations of the USEPA, ADEQ and ADWR.

Section 1.3 The Districts water source, the aquifer underlying Sacramento Valley, will be protected to the fullest extent possible. At present we have tapped that aquifer and have sufficient water to serve approximately 5010 units. A unit is defined as a residential unit allocated 200 gallons of water per day (gpd). As the District grows it is anticipated the aquifer will be tapped to provide additional water.

The Board realizes water is a limited commodity and therefore encourages conservation. It has structured its water rates accordingly penalizing those who use larger quantities. The Board further recognizes the value of the aquifer and will take every step possible to oppose attempts to obtain, sell or transfer water from the District, or the Valley.

Article 2 - Expansion of Service

Section 2.1 Annexation to the District is possible. The Board, however, realizing the responsibility it has to serve the existing district will not actively seek out annexation. It will be District priority to provide water to the customers within its boundary as exists upon the adoption of this PPM. If annexation is approved a development fee equal to the tax computed from tax rates and assessed values in effect on the day of annexation times the number of years between 1976 and the annexation will be assessed. This development fee will be in addition to any assessments or enlargement fees necessary to enact to provide water to the area annexed. The development fee collected shall be deposited in the O & M account of the District.

Section 2.1.1 The Board of Directors placed a five-year moratorium on all annexations to the District and an option for five more, when adopting these policies on January 7, 1991.

Section 2.2 - Water Access Rights Initially each parcel of land within the District was equated to a certain number of service connections or water access rights in accordance with the following table:

Table 1

Parcel Gross Acreage	Service Connections
0 - 19	1
20 - 29	2
30 - 59	3
60 - 119	5
120 - 239	10
240 - 479	16
480 - 640	24

There were 4,989 total service connections when the original assessments were filed in December of 1990. It is the policy of the Board that each of those service connections equates to 200 gpd of water. Furthermore it is Board Policy that property owners may sell these connections to other property owners in the District provided each parcel maintains one service connection. Before any such transaction is official, documentation of said transaction, signed by both parties, must be presented to and approved by the Board. Any District charges including assessments that are outstanding shall be paid in full before any request for transfer is presented.

As additional sources of water are acquired the Board expects the water access rights to be allocated similarly.

Section 2.3 - Future Development As lands within the district develop, the existing system may not be adequate to supply the needed water for those developments. The District will look to the developer to pay the cost of increasing the capacity of the system to serve the proposed development. Depending on the size of those developments the cost may be that of drilling a new well or constructing a new storage tank or laying new water lines or all of the above. An engineering analysis will be made by the District engineer to determine the impact of each major development. In the event the District has an adequate water supply and distribution capacity and no system modification is necessary, the developer shall pay a water access rights fee equal to the initial well and backbone distribution assessment $474.72/residential unit.

Section 2.4 - Subdivisions, Lot Splits The supply of water to the District is limited. The number of service connections is directly related to that supply. Therefore, before subdivisions are approved water adequacy will have to be proved. The owner or developer wishing to split a lot or subdivide a parcel will either have to acquire water access rights in accordance with Section 2.2 or fund the system enlargement in accordance with Section 2.3. Arizona law allows a lot split but that in no way guarantees a water access right for any lot.

The developer shall then be responsible for the construction of the secondary tertiary and service connections within the development in accordance with the District's Standards.

Section 2.5 - Water Supply The District's water supply is expected to continue to be the Sacramento Valley aquifer. Future supplies will come from additional wells drilled into the aquifer.

Article 3 - Financial

Section 3.1 - Fees, Credits, & Charges To provide service to each lot in the District various fees, charges, and assessments may be imposed.

A. Water access rights may be traded, sold, see Section 2.2.
B. Development fees to fund oversizing may be required, see Sections 2.1 and 2.3.
C. Assessments, as authorized in accordance with the Arizona Revised Statutes, may be enacted for necessary improvements.
D. Property levies have been historically used for the operation and maintenance of the district. It is the intention of the Board to minimize the use of direct O & M levies relying more and more on the sale of water to finance such operations.

Section 3.2 - Purchase of Water

A. Water rates will be established by the Board and periodically adjusted to account for increases in cost to provide potable water to the various zones, areas, and standpipes throughout the District.

Any excess water may be available to non-district residents at the Districts standpipes only but at a surcharge above the rate paid by district residents. The surcharge will be 50%.

Residential Meter Monthly Rates

	CURRENT	PROPOSED
0 - 5,000 gal $15.00 min	$.4375/100 gal	$.4375/100 gal
5 - 10,000 gal	.2500/100 gal	.50/100 gal
10,000 gal	.5000/100 gal	.75/100 gal
Commercial & Residential Standpipes	.2500/100 gal	.35/100 gal

B. Meter Connection In order to obtain service through a connection, two deposits must be made with the District. The first is the Meter Connection Fee and represents the cost of connecting the unit to the District's lines. It is non-refundable. The second is a deposit to insure payment and is refundable when the service is disconnected.

The deposits are:

Meter Connection Fee	$ 110.00 *
Water Deposit	$ 45.00
Service connections if installed by District (in addition to meter connection)	$ 350.00

* Includes $25.00 refundable deposit

C. Standpipes The District's standpipes are computer operated and require a coded card to access. The card is available at the District office. A deposit of $ 45.00 will be imposed to insure proper payment of bills and will be returned with the return of the access card. Replacement cards are available at $ 10.00 .

D. Monthly Billing Service Connection and standpipe customers will be billed on a monthly basis for water used. Payment in full is due 10 days after receipt of the bill. Failure to pay will result in discontinuance of service.

E. Water Haulers will be accommodated at the commercial standpipes which are also computer operated. Access cards can be obtained at the District office after the payment of a deposit of $1,000. Billing will be monthly and will be subject to the same regulations as set forth in Section 3.2.D.

Water Haulers will be required to have the capability to dispense water through a metering device so their customers can determine the amount of water delivered. Proof of compliance with Health regulations dealing with the transportation of potable water will also be required.

The District will establish additional rules from time to time governing the number of haulers and the rates charged those haulers for water delivered inside and outside the District.

F. Deposits will be refunded at end of second year, in future bills or at end of service, whichever is first. Interest paid at 3% per annum.

Article 4 - Construction & Maintenance

Section 4.1 - Maintenance Responsibilities Responsibilities will be shared between the District and the individual. The District shall be responsible for the maintenance of the wells, pumps, storage and pressure tanks, standpipes, primary, secondary and tertiary water lines. The individual shall be responsible for the service tap, service connection, meter housing, yoke & meter as well as their own service line.

Section 4.2 - Construction Standards The District will adopt standards for all of the construction, maintenance material, equipment and techniques needed in the operation of the water system. The Director of Public Works of Mohave County will develop such standards and present to the Board for adoption. It is expected these standards will be amended from time to time.

Section 4.3 - Road Cuts Anyone wishing to excavate on the public right-of-way to construct or maintain a water line shall apply for the necessary permit at the District Engineer's office where the appropriate permit can be acquired and bond posted.

The permittee shall be responsible for notification of all pertinent utilities in accordance with the Arizona Revised Statutes.

Section 4.4 - As Built Drawings Each individual or developer who constructs a water line shall be responsible for filing as built drawings, prepared by an engineer registered in the State of Arizona, with the District. These record drawings shall be filed prior to receiving the Districts final approval.

Section 4.5 - Fire Hydrants The District shall require fire hydrants be constructed as part of every development within the District. The fire hydrants shall meet and be constructed in accordance with the applicable County Standard.

Article 5 - Operation

Section 5.1 Employees of the District shall be considered employees of Mohave County and shall be entitled to all rights, privileges, rules and regulations thereof.

Section 5.2 - Property The property acquired by the District shall be considered the private property of the District and shall be maintained and operated accordingly.

The property may be secured and access in non-business hours may be prohibited. When necessary, trespassers may be prosecuted.

Section 5.3 - Hours of Operation The District office shall be open five days a week during the hours of 8:00 A.M. to 5:00 P.M. An emergency number will be provided on a 24-hour a day, 7 day a week basis. Office hours may be modified after appropriate notification of the District's customers.

Section 5.4 - Private Wells It shall be the policy of the Board of Directors to oppose the construction of any private well in the District. Wells existing prior to the construction of the water system in 1991 may continue but shall not be allowed to be connected to the District's system.

APPENDIX C

LITHOLOGIC LOGS

Golden Valley County Improvement District #1

Mohave County, Arizona

Well 1

SE ¼, SE ¼, SE ¼ Section 13, T. 21N., R. 19W.

Lithologic Log

by:

Manera, Inc.

GVCID #1
Well 1

Depth	Max Size	Angularity	Color	
30-40	1/16	SA	Lt. Tan	Fine Grained Quartz Sand with Magnetite. Iron Staining of Quartz.
40-50	1/16	SA	Lt. Tan	Fine Grained Quartz Sand with Magnetite. Iron Staining of Quartz.
50-60	1/8	SA	Lt. Tan	Fine Grained Quartz Sand with Magnetite. Iron Staining of Quartz.
60-70	1/32	SA	Lt. Tan	Fine Grained Quartz Sand with Magnetite. Iron Staining of Quartz.
70-80	1/8	SA	Lt. Tan	Coarse to Fine Grained Quartz Sand with Magnetite. Iron Staining of Quartz.
80-90	1/8	SA	Lt. Tan	Coarse to Fine Grained Quartz Sand with Magnetite. Iron Staining of Quartz.
90-100	1/32	SA	Lt. Tan	Fine Grained Quartz Sand with Magnetite. Iron Staining of Quartz.
100-110	<1/32	SA	Lt. Tan	Very Fine Grained Quartz Sand with Magnetite. Iron Staining of Quartz. Some Silt.
110-120	1/16	SA	Lt. Tan	Fine Grained Quartz Sand with Magnetite. Iron Staining of Quartz.

120-130	1/16	SA	Lt. Tan	Very Fine to Coarse Grained Quartz Sand with Magnetite. Iron Staining of Quartz. Some Silt.
130-140	<1/32	SA	Lt. Tan	Silty to Very Fine Grained Quartz Sand with Magnetite. Iron Staining of Quartz.
140-150	1/8	SA	Lt. Tan	Coarse to Fine Grained Quartz Sand with Magnetite. Iron Staining of Quartz.
150-160	<1/32	SA	Lt. Tan	Very Fine Grained to Silty Quartz Sand with Magnetite. Iron Staining of Quartz.
160-170	<1/32	SA	Lt. Tan	Very Fine Grained to Silty Quartz Sand with Magnetite. Iron Staining of Quartz.
170-180	<1/32	SA	Lt. Tan	Silty very Fine Grained Quartz Sand with Magnetite. Iron Staining of Quartz.
180-190	1/16	SA	Lt. Tan	Coarse to Very Fine Grained Quartz Sand with Magnetite. Iron Staining of Quartz.
190-200	<1/16	SA	Lt. Tan	Silty to Coarse Quartz Sand with Magnetite. Iron Staining of Quartz.
200-210	1/8	SA	Lt. Tan	Very Fine to Coarse Quartz Sand with Magnetite. Iron Staining of Quartz.
210-220	1/8	SA	Lt. Tan	Fine to Coarse Quartz Sand with Magnetite. Iron Staining of Quartz. Few Particles of VolcanicMaterials.

220-230	1/8	SA-A	Gray-Tan (color chg)	Coarse Granitic Sand Iron Stained Quartz and Sharp Angular Particles of Volcanics (20%) Probably Volcanic Boulders.
230-240	1/4	SA-A	Gray-Tan	Coarse Granitic Sand iron Stained Quartz and Sharp Angular Particles of Volcanics (20%) Probably volcanic Boulders.
240-250	1/8	SA	Tan (color chg)	Coarse Granitic Sands.
250-260	<1/8	SA	Tan	Fine Grained Sands.
260-300	1/4	SA-A	Gray-Tan (color chg)	Coarse Granitic Sands. Angular Volcanic Particles (20-25%)
300-310	1/4	SA-A	Gray-Tan	Very Coarse Granitic Sands. 40 - 50% Volcanic. Some Light colored-Reddish Gray.
310-320	1/2	SA-A	Tan-Gray	Coarse Granitic Iron Stain Quartz Sand and Volcanic Chips (50%) Increasing Amounts of Volcanic Materials.
320-330	1/8	SA-A	Gray	Coarse Granitic and Volcanic Sand.
330-340	1/4	SA-A	Gray	Coarse Volcanic Sands.
340-350	1/16	SA-A	Gray	Fine Grained Volcanic Sands.
350-360	>1/4	SA-A	Tan-Gray	Coarse Rhyolitic Sands.
360-370	1/4	SA-A	Gray	Coarse Rhyolitic Sands.

370-380	1/4	SA-A	Gray (red-dish gray)	Coarse Rhyolitic Sands.
380-390	1/4	SA-A	Gray	Coarse Rhyolitic Sands.
390-400	1/8	SA-A	Gray	Coarse Rhyolitic Sands.
400-410	1/8	SA-A	Gray	Coarse Rhyolitic Sands.
410-420	1/16	SA-A	Gray	Coarse Rhyolitic Sands.
420-430	1/4	SA-A	Gray	Coarse Rhyolitic Sands.
430-440	1/8	SA-A	Gray	Coarse Rhyolitic Sands.
440-450	1/4	SA-A	Gray	Coarse Rhyolitic Sands.
450-460	1/8	SA-A	Gray	Coarse Rhyolitic Sands.
460-470	<1/16	SA-A	Gray	Fine Grained Volcanic Rhyolitic Sand.
470-550	1/4	SA-A	Gray	Andesitic to Rhyolitic Sands and Gravels.
550-560	1/8	SA-A	Gray	Fine to Coarse Grained Andesitic to Rhyolitic Sand.
560-700	1/4	SA-A	Gray	Fine to Coarse Sand and Gravel (Volcanics).
700-880 gray)	1/4 Coarse Volcanic	SA-A	Gray (red-	Fine Grained to Coarse Sands and Gravels - Probably Conglomerate.
880-900	1/4	SA-A	Brownish-Gray	Fine Grained to Coarse Volcanic Sands and Gravels - Lots of Chips.

900-980	1/4	SA-A	Reddish Brown-Gray	Fine Grained to Coarse Volcanic Sands and Gravel - Lots of Chips.
980-990	1/4	SA-A	Gray to Tan	Definitive Color Change.
990-1000	1/8	SA-A	Gray to Brown	Continuing Color Change.
1000-1010	<1/32	SA-A	Brown	Clay with volcanic Sands and Gravels (From Above).
1010-1020	1/4	SA-A	Brownish	Grading Back into
Gray	Sands and Gravels.			
1020-1030	1/4	SA-A	Brownish Gray	Coarse to Fine Grained Sand and Gravels (Volcanic)
1030-1060	1/4	SA-A	Gray	Coarse to Fine Grained Sand and Gravels(Volcanic).
1060-1070	1/4	SA-A	Gray - Blackish	Coarse to Fine Grained Sand and Gravels(Volcanic).
1070-1120	1/4	SA-A	Gray	Coarse to Fine Grained Sand and Gravels.
1120-1220	1/4	SA-A	Reddish Gray	Coarse to Fine Grained Sand and Gravels.
1220-1240	1/4	SA-A	Brownish Gray	Volcanic Sands and Clay.
1240-1250	1/16	SA-A	Brownish Gray	PredominantlyClay.
1250-1290	1/8	SA-A	Brownish Gray	Predominantly Clay with Volcanic Sands and Gravels.
1290-1300	1/4	SA-A	Brownish Gray	Predominantly Clay with Volcanic Sands and Gravels.

1300-1310	1/8	SA-A	Brownish Gray	Predominantly Clay with Volcanic Sands and Gravels.
1310-1470	1/8	SA-A	Light Tan	Volcanic Ash Clay.
1470-1500	1/8	SA-A	Whitish	Volcanic Ash Clay.

Golden Valley Improvement District #1

Mohave County, Arizona

Well 2

NE 1/4, NE 1/4, NE 1/4 of Section 25 T.21N., R.19 W.

July, 1991

Lithologic Log

Golden Valley Improvement District #1

Well 2

Depth	Size	Angularity	Color	Description
40-60	1/8	SA-A	Tan	Fine grained granitic sands with five percent volcanic particles.
70-80	1/8	SA-A	Brownish tan	Salt and pepper colored coarse sands consisting of 65 percent granitics and 35 percent volcanics with fine grained granitic sand.
80-100	1/16	SA	Tan	Predominantly fine grained granitic sands with five percent volcanics.
100-110	-	-	Tan	Clay with fine grained granitic sands.
110-210	1/8-1/4	SA	S/P	Alternating layers of sands varying from predominantly granitic materials to mixtures with varying amounts of granitic and volcanic materials.
210-260	1/4	SA	S/P	Volcanic and granitic sands and gravels.
260-330	1/4	SA	Tan	Sand and gravels of light colored volcanics with fine grained quartz sand.
330-450	1/4	SA	S/P	Same materials but the colors of the volcanics vary from light to dark.

GVIC#1
Well 2
Page two

450-470	1/8	SA	Light Lt.Brn.	Coarse volcanic sand and gravel with fine grained, iron stained quartz sand.
480-630	1/8	SA	Pinkish Tan	Light colored volcanic sands
630-690	1/16	SA	Br. Tan	Fine grained volcanic sands probably with clay and a few coarse volcanic particles.
690-750	1/8	SA	Tan	Volcanic sands and gravel and clay.
750-760	1/16	SA	Pink Tan	Very fine grained volcanic sands.
760-770	1/8	SA	Tan	Coarse and fine grained volcanic sand.
770-790	1/16	SA	Tan	Same as 750-760
790-870	1/8	SA	Tan	Fine grained volcanic sands with 15 percent coarse particles - probably clay.
870-880	1/16	SA	Brown	Iron stained, very fine grained quartz sand.
880-1140	1/8	SA	Tan	Alternating layers of clay and volcanic sands and gravel.
1140-1220	-	-	Tan	Clay
1220				Lost circulation - well completed.

Valley Pioneer Water Company

Mohave County, Arizona

Well 4

NW 1/4, NE 1/4, NE 1/4 of Section 8 T.21N., R.18 W.

July, 1991

Lithologic Log

MOHAVE-003

Valley Pioneer Water Company

Well 4

Depth	Size	Angularity	Color	Description
40-90	1/8	SA	Tan	Granitic sands
100-230	1/16	SA	Brownish tan	Clay and very fine grained granitic sands with one or more thin layers of quarter inch gravel.
230-270	-	-	Brown	Clay
270-730	1/16-1/8	SA	Dk. tan	Alternating layers of clay with layers of fine grained granitic sands and/or coarse granitic sands with some gravel.
730-1030	1/8	SA-SR	Dk. tan	Very fine grained to coarse granitic sands with layers of clay, probably cemented.
1030-1060	1/8	SA-SR	Tan	Cemented, fine grained to coarse granitic sands with a few volcanic (?) particles.
1060-1290	1/8	SA-SR	Tan	Conglomerate, fine grained to coarse granitic sands and clay. A few volcanic (?) particles. Increasing hardness with depth.

Only a few volcanic (?) particles were observed in the drill cutting samples collected during the drilling of this well. All volcanic (?) particles observed were in samples collected below 1,030 feet.

APPENDIX D

PUMPING TEST FIELD DATA

Golden Valley Improvement District #1

Well 1

SE¼, SE¼, SE¼ Section 13, T. 21 N., R. 19 W.

Pumping levels when Discharge, Q, equals 689 gallons per minute

Static Water Level 921 feet.

Test April 15-18, 1991

Time since pumping started, minutes	Drawdown feet	Time since pumping started, minutes	Drawdown feet
4.5	67.08	350.0	76.71
5.0	67.30	400.0	76.01
5.5	67.43	450.0	77.00
6.0	67.94	500.0	75.27
6.5	68.20	550.0	76.10
7.0	68.48	600.0	75.53
7.5	68.84	700.0	76.23
8.0	69.06	800.0	76.17
9.0	69.67	900.0	76.55
10.0	70.34	1000.0	76.55
12.0	71.11	1200.0	77.09
14.0	71.62	1400.0	76.07
16.0	72.33	1600.0	75.49
18.0	72.71	1800.0	75.14
20.0	73.38	2000.0	75.14
24.0	74.25	2400.0	74.73
28.0	75.27	2800.0	74.25
32.0	75.91	3200.0	73.83
36.0	76.07	3500.0	74.31
40.0	76.55	4000.0	73.86
44.0	77.09	4300.0	74.12
48.0	76.93		
52.0	77.64		
56.0	77.67		
60.0	77.61		
70.0	77.16		
80.0	77.00		
90.0	78.76		
100.0	78.69		
120.0	78.34		
140.0	77.86		
160.0	77.99		
180.0	78.05		
200.0	77.77		
250.0	76.58		
300.0	77.41		

Golden Valley Improvement District #1

Well 2

NE¼, NE¼, NE¼ Section 25, T. 21 N., R. 19 W.

Pumping levels when Discharge, Q, equals 704 gallons per minute

Static Water Level 866 feet.

Test July 8-11, 1991

Time since pumping started, minutes	Drawdown feet	Time since pumping started, minutes	Drawdown feet
4.0	12.48	500.0	34.38
4.5	15.94	600.0	34.70
5.0	20.39	700.0	35.08
6.0	23.27	800.0	35.21
7.0	24.10	900.0	35.37
8.0	24.39	1000.0	35.72
9.0	24.71	1300.0	36.30
10.0	25.32	1600.0	36.49
12.0	25.96	2000.0	37.10
14.0	26.47	2500.0	37.54
16.0	27.17	3000.0	37.64
18.0	26.76	4000.0	37.32
20.0	27.05	4300.0	37.80
24.0	27.59		
26.0	27.88		
30.0	28.29		
34.0	28.58		
38.0	28.87		
42.0	29.38		
46.0	29.77		
50.0	29.90		
54.0	30.15		
60.0	30.28		
70.0	30.41		
80.0	30.86		
90.0	30.98		
100.0	31.11		
110.0	31.62		
130.0	32.01		
150.0	32.36		
180.0	32.74		
220.0	33.03		
250.0	33.32		
300.0	33.77		
350.0	34.09		
400.0	34.38		

APPENDIX E

CHEMICAL ANALYSES REPORT FORMS

DRINKING WATER QUALITY

INORGANIC CHEMICAL ANALYSIS REPORTING FORM

91-103516 (SPECIMEN NO.)

Before completing, please read instructions on reverse side.

04/16/91 (DATE REC'D)

NOTE: WATER SYSTEM MUST COMPLETE ALL BLANKS INSIDE THIS BOX

PWS ID NO. (1-7): 0 4 0 8 0 8 1

LAB NAME AND ADDRESS — LAB ID NO (42-46): 0 0 0 0 2

Steven B. Hankins, Director
ARIZONA TESTING LABORATORIES
810 East Hammond Lane
Phoenix, Arizona 85034 (602) 254-6181

SAMPLE DATE (31-36): Mo. 04 Day 15 Yr. 91

SAMPLE: Type (37) R; Time (Hrs.) (38-41) 1400

WATER SYSTEM NAME: Mohave County Board of Supervisors
Golden Valley County Improvement Dist

SAMPLING POINT—WELL NO. OR EXACT LOCATION: Well 1, SE¼, SE¼, SE¼ Sec. 13,T.21N.,R.19W.

MAILING NAME AND ADDRESS:
Manera, Inc.
5251 N. 16th Street, Suite 302
Phoenix, AZ 85016-3215

SAMPLE APPEARANCE: [X] Clear [ ] Turbid [ ] Other (comment)

WATER SUPPLY SOURCE: [X] Well [ ] Surface

SAMPLE TYPE CODES
C - Check Sample
D - Regular Distribution Sample
P - Plant Tap Sample
R - Raw Water Sample
S - Special Sample

SAMPLER'S COMMENTS OR INSTRUCTIONS

CONTAMINANT CODE	ANALYSIS METHOD	CONTAMINANT NAME	(MCL)	ANALYSIS RESULTS (mg/l)	EXCEEDS
1005	101	Arsenic	(0.05)	< 0.01	
1010	101	Barium	(1.)	< 0.5	
1015	101	Cadmium	(0.010)	< 0.005	
1020	101	Chromium	(0.05)	< 0.01	
1025	107	Fluoride	(1.4-2.0)	0.7	
1030	101	Lead	(0.05)	0.0055	
1035	103	Mercury	(.002)	< 0.001	
1040	109	Nitrates (N)	(10.)	2.7	
1045	101	Selenium	(0.01)	< 0.005	
1050	101	Silver	(0.05)	< 0.02	
1927	149	Alkalinity		140.	
1016	101	Calcium		24.	
1017	149	Chloride		26.	
1022	101	Copper		< 0.05	
1915	141	Hardness		110.	
1028	101	Iron		< 0.1	
1031	101	Magnesium		11.	
1032	101	Manganese		< 0.05	
1925	135	pH		7.8	
1052	101	Sodium		43.	
1055	137	Sulfate		20.	
1930	139	TDS		250.	
1095	101	Zinc		< 0.05	

Pursuant to R9-6-223 check samples are REQUIRED for ANY and ALL contaminant(s) checked in the exceeds column.

LOCATION CODE (28-30):

< = less than the practical quantitation limit (PQL) given

COMMENTS

3 cc: ADEQ

Steven Hankins
ANALYST
Steven Hankins

ANALYSIS DATE: Mo. 05 Day 06 Yr. 91 (22-27)

MOHAVE-003

Controls for Environmental Pollution, Inc.
P.O. BOX 5351 • Santa Fe, New Mexico 87502
IN STATE 505/982-9841
OUT OF STATE 800/545-2188 • FAX - 505-982-9289

Controls for Environmental
Pollution, Inc.
P.O. Box 5351
Santa Fe, NM 87502
Attn:
Phone: (505) 982-9841/(800) 545-2188

Manera Inc.
5251 N. 16th Street Suite 302
Phoenix, AZ 85016

Attn: Paul Manera
Invoice Number:

Order #: 91-04-561
Date: 05/10/91 09:56
Work ID: Water (NR)
Date Received: 04/23/91
Date Completed: 05/10/91

Mohave County Board of Spvrs.
Golden Val. Imp. Dist. #1
P.O. Box 390
Kingman, AZ 86402

Well 1, SE1/4, SE1/4, SE 1/4 of
Sec. 13, T. 21 N., R. 19 W.

SAMPLE IDENTIFICATION

Sample Number	Sample Description	Sample Number	Sample Description
01	Well 1 Sys. 04-08-081		

Remainder of sample(s) for routine analysis will be disposed of three weeks from final report date. Sample(s) for bacteria analysis only, will be disposed of immediately after analysis. This is not applicable if other arrangements have been made.

Approved By

MOHAVE-003

Controls for Environmental Pollution, Inc.
P.O. BOX 5351 • Santa Fe, New Mexico 87502
IN STATE 505/982-9841
OUT OF STATE 800/545-2188 • FAX - 505-982-9289

TEST RESULTS BY SAMPLE

Sample: 01A Well 1 Sys. 04-08-081 Collected: 04/15/91 14:00

Test Description	Result	D.L.	Units	Analyzed	By
Gross Alpha	<2	2	pCi/liter		

MOHAVE-003

DRINKING WATER QUALITY

INORGANIC CHEMICAL ANALYSIS REPORTING FORM

91-105109
SPECIMEN NO.

Before completing, please read instructions on reverse side.

06/10/91
DATE REC'D

NOTE: WATER SYSTEM MUST COMPLETE ALL BLANKS INSIDE THIS BOX

PWS ID NO. (1-7)
0 4 0 8 0 8 1

LAB NAME AND ADDRESS

LAB ID NO. (42-46): 0 0 0 0 2

Steven B. Hankins, Director
ARIZONA TESTING LABORATORIES
810 East Hammond Lane
Phoenix, Arizona 85034 (602) 254-6181

SAMPLE DATE	Mo.	Day	Yr.
(31-36)	0 6	0 8	9 1

SAMPLE	Type (37)	Time (Hrs.) (38-41)
	R	1 4 0 0

WATER SYSTEM NAME: Mohave County Board of Supervisors GVCID #1

SAMPLING POINT—WELL NO. OR EXACT LOCATION: Well 2, NE¼, NE¼, NE¼ Sec. 25, T.21N, R.19W

MAILING NAME AND ADDRESS:
Manera, Inc.
5251 N. 16th Street, Suite 302
Phoenix, Arizona 85016-3215

SAMPLE APPEARANCE	
X	Clear
	Turbid
	Other (comment)

WATER SUPPLY SOURCE	
X	Well
	Surface

SAMPLE TYPE CODES
C - Check Sample
D - Regular Distribution Sample
P - Plant Tap Sample
R - Raw Water Sample
S - Special Sample

SAMPLER'S COMMENTS OR INSTRUCTIONS

CONTAMINANT CODE (11-13)	ANALYSIS METHOD (14-16)	CONTAMINANT NAME	(MCL)	ANALYSIS RESULTS (mg/l) (17-20)	EXCEEDS (21)
1005	101	Arsenic	(0.05)	0.012	
1010	101	Barium	(1.)	< 0.5	
1015	101	Cadmium	(0.010)	< 0.005	
1020	101	Chromium	(0.05)	< 0.01	
1025	107	Fluoride	(1.4-2.0)	1.4	
1030	101	Lead	(0.05)	< 0.002	
1035	103	Mercury	(.002)	< 0.001	
1040	109	Nitrates (N)	(10.)	2.1	
1045	101	Selenium	(0.01)	< 0.005	
1050	101	Silver	(0.05)	< 0.02	
1927	149	Alkalinity		150.	
1016	101	Calcium		17.	
1017	149	Chloride		30.	
1022	101	Copper		< 0.05	
1925	141	Hardness		70.	
1028	101	Iron		0.32	
1031	101	Magnesium		6.9	
1032	101	Manganese		< 0.05	
1925	135	pH		7.8	
1052	101	Sodium		62.	
1095	137	Sulfate		25.	
1930	139	TDS		280.	
1095	101	Zinc		< 0.05	

Pursuant to R9-8-223 check samples are REQUIRED for ANY and ALL contaminant(s) checked in the exceeds column.

LOCATION CODE (26-30)

< = less than the practical quantitation limit (PQL) given

COMMENTS

3 cc: ADEQ

Steven Hankins
ANALYST
Steven Hankins

ANALYSIS DATE	Mo.	Day	Yr.
(22-27)	0 7	1 0	9 1

MOHAVE 003

Controls for Environmental Pollution, Inc.
P.O. BOX 5351 • Santa Fe, New Mexico 87502 IN STATE 505/982-9841
OUT OF STATE 800/545-2188 • FAX - 505-982-9289

Controls for Environmental
Pollution, Inc.
P.O. Box 5351
Santa Fe, NM 87502
Attn:
Phone: (505) 982-9841/(800) 545-2188

Manera Inc.
5251 N. 16th Street Suite 302
Phoenix, AZ 85016

Attn: Paul Manera
Invoice Number:

Order #: 91-06-244
Date: 08/05/91 10:28
Work ID: Water (NR)
Date Received: 06/12/91
Date Completed: 08/05/91

NE1/4, NE1/4, NE1/4 Section 25, T. 21 N., R. 19 W. G & SR B&M
Temperature 40 degerees C.

SAMPLE IDENTIFICATION

Sample Number	Sample Description	Sample Number	Sample Description
01	GVCID #1 Well 2		

Remainder of sample(s) for routine analysis will be disposed of three weeks from final report date. Sample(s) for bacteria analysis only, will be disposed of immediately after analysis. This is not applicable if other arrangements have been made.

Approved By

MOHAVE-003

Controls for Environmental Pollution, Inc.
P.O. BOX 5351 • Santa Fe, New Mexico 87502
IN STATE 505/982-9841
OUT OF STATE 800/545-2188 • FAX - 505-982-9289

TEST RESULTS BY SAMPLE

Sample: 01A GVCID #1 Well 2 Collected: 06/08/91 14:00

Test Description	Result	D.L.	Units	Analyzed	By
Gross Alpha	<2	2	pCi/liter		

MOHAVE-003

Staff Report
on
Kingman Area
Water Supply and Demand

MOHAVE-003

Kingman Area Groundwater Basin Study
Arizona Department of Water Resources
March 24, 1994

I. Introduction

Purpose

This report presents the analysis and recommendations regarding the need to establish an AMA in the Sacramento or Hualapai groundwater basins.

Background

In a letter dated September 6, 1993, Noel H. Labonte, President of Valley Pioneers Water Company, Inc., of Golden Valley, Arizona, requested the Arizona Department of Water Resources (ADWR) to review and possibly designate Golden Valley as an Active Management Area. Golden Valley is a small part of the northern end of the Sacramento Valley Groundwater Basin. He requested that ADWR initiate a study of the demands on the groundwater within the Sacramento Valley basin in the area of Golden Valley for the purpose of assessing the long term water supply availability of the basin and that the Department meet with representatives of Mohave County, the City of Kingman, the Cyprus Mining Company and Valley Pioneer to discuss this issue. (Attached in Exhibit 1)

Mr. Tom Carr of ADWR responded to Mr. Labonte on October 21, 1993 and stated that the Department would conduct preliminary studies, meet with local officials and other parties and then contact Mr. Labonte with the results of the study. (Included in Exhibit 1.)

The Department then conducted a reconnaissance level hydrologic and economic investigation including an analysis of the impact of future water demand on the groundwater supplies.

An AMA can be designated only if any of the following conditions exist:

1. Active management practices are necessary to preserve the existing supply of groundwater for future needs.
2. Land subsidence or fissuring is endangering property or potential groundwater storage capacity.
3. Use of groundwater is resulting in actual or threatened water quality degradation.

On January 24, 1994 Departmental staff met with local governmental officials, representatives of private water companies and Cyprus Mining Company to confirm our assumptions about projected growth in the Kingman area. After this meeting, a final hydrologic analysis was completed.

Present and projected demands for water resources were based on population and industrial development trends. Groundwater supplies were estimated from hydrologic information contained within published reports and data sources within the ADWR. The analysis evaluates, in a preliminary way, whether there are sufficient groundwater resources for continued residential and industrial development in the Kingman area and in the Sacramento Valley groundwater basin in the general area of Golden Valley west of Kingman on Arizona Highway 68. Water has historically been withdrawn in the Golden Valley area for use at a copper mining operation in the Cerbat mountains. Withdrawal and use of water for this mine is projected to cease within fifteen years as the mineral deposit is exhausted.

A map of the region follows page 3.

Exhibits containing information were prepared for the analysis. These are attached in Exhibit 3 and include:

1. Kingman Area Groundwater Summary Sheet, showing water supplies and demands by basin for the years 1990 and 2040;

2. Hualapai Basin Groundwater Fact Sheet, a narrative explanation about groundwater supplies and projected water demands;
3. Sacramento Valley Basin Groundwater Fact Sheet, a narrative explanation about groundwater supplies and water demands; and,
4. Exhibits of cross-sectional data on the geology and groundwater of each of the basins showing current and projected depths to water.

Map:
Hualapai & Sacramento
Groundwater Basins
Mohave County

MOHAVE-003

HUALAPAI AND SACRAMENTO BASINS

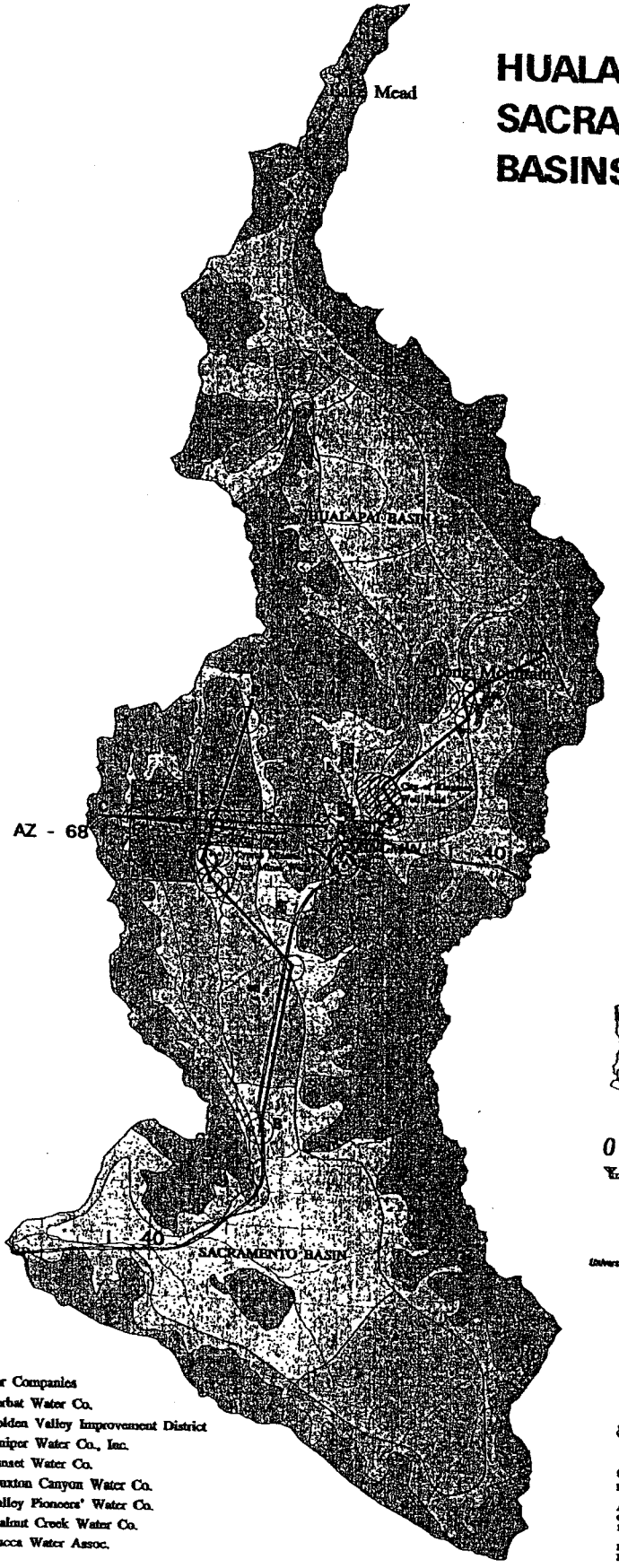

DEPTH TO WATER BELOW LAND SURFACE (in feet)

SOURCE: Base Map From: Arizona Dept. of Water Resources (1980, 1990)

- Less than 500
- 500 to 1000
- Greater Than 1000
- Wells In Area of Analysis
- Cross-sections
- Kingman Well Field
- Cities
- Bedrock
- Outside of Regional Aquifer Area
- Streams
- Freeways

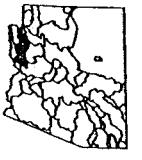

0 10

MILES

Scale 1:500000

Universal Transverse Mercator Projection

NORTH

Water Companies
1. Cerbat Water Co.
2. Golden Valley Improvement District
3. Juniper Water Co., Inc.
4. Sunset Water Co.
5. Truxton Canyon Water Co.
6. Valley Pioneers' Water Co.
7. Walnut Creek Water Co.
8. Yucca Water Assoc.

ARIZONA DEPARTMENT OF WATER RESOURCES

Geographic Information System
For more information about this map contact:

Arizona Department of Water Resources
Geographic Information System
15 South 15th Avenue, Phoenix, AZ 85007

Phone: (602) 542-1546
Fax: (602) 542-3343

II. Analysis

Population trends and projections: 1980 to 2040

The 1980 total population of the two basins was 18,768 persons, 13,319 living in the in Hualapai Valley and 5,449 in Sacramento Valley, primarily Golden Valley. By 1990, the basin population in the Kingman area has increased to 30,289 persons with 22,405 living in Hualapai Valley and 7,884 in Sacramento Valley. Projected population for the same area by the year 2040 is 87,218 with 66,220 projected for Hualapai Valley and 20,998 for Sacramento Valley. The projections are made using demographic assumptions and have not taken into account any effects of intensive industrial development that might occur. In this analysis, some additional industrial development is assumed to occur related to present efforts of the Mohave County Economic Development Authority.

Demand for water resources: 1990 to 2040

Using current reports on water use in the area of the study, it is estimated that in the 1992-1993 period about 7,072 acre-feet of water was used for municipal purposes annually. Of this, 6,137 acre-feet was taken from the Hualapai Valley basin and 935 acre-feet from Sacramento Valley. Of the water used in Sacramento Valley, 450 acre-feet of water was pumped by Kingman in 1991 and 372 acre-feet by Valley Pioneer in 1992.

The Cyprus Mineral Park used an estimated 323 acre-feet of water from its well field in the Sacramento Valley in 1993. However, use of groundwater by the mine has been offset by rainwater runoff trapped in one of the open pits in the mine. In normal times, groundwater pumping by the mine would be higher, approximately 800 acre-feet per year. Pumping by the mine from the basin has reached about 5,300 acre-feet per year during peak operations in the past. Due to the changeover from hard rock mining to a copper leaching operation, less than historic levels of water use are projected. The

operation of the Cyprus Mineral Park is projected to continue for about 15 years with annual demands for water not exceeding 800 to 900 acre-feet of groundwater annually. It is anticipated in this analysis that the Mineral Park will close with the termination of the leaching operation.

Using population projections for the year 2040 given above and information provided on water use from published reports in the area, municipal demands are projected to reach about 15,100 acre-feet, of which 12,832 acre-feet will occur in the Hualapai Basin and 2,240 acre-feet in Sacramento Valley.

In the Hualapai Valley basin, the two major population centers are the City of Kingman and the New Kingman/Butler subdivision. Both are served by the City of Kingman water department. Demands outside of the city's service area are projected to reach about 730 acre-feet per year, however, by that time some of these areas may already be annexed in to the City of Kingman service area. Total projected municipal demand for the basin is 12,832 acre-feet per year.

In Sacramento Valley, assuming demands by the City of Kingman and various small providers in the area are held constant, increases are projected for the Golden Valley Community Improvement District #1 (GVCID), and Valley Pioneer Water Company. The projected 2040 demand for both providers is estimated to be 827 acre-feet per year. The Department has issued water availability letters for a demand of 2,244 acre-feet per year (1,440 acre-feet per year for the GVCID and 844 acre-feet for the Valley Pioneer Water Company). Remaining demands of 898 acre-feet per year are projected for other parts of the basin outside of Golden Valley.

The City of Kingman and the Mohave County Economic Development Authority are promoting industrial development in the study area. To date, few major manufacturing companies have been reported interested in locating in the area. An estimate of water demand of 1,000 acre-feet per year is used in the 2040 projection but,

depending on development efforts of the entities involved, it is possible that much industrial activity could eventually be initiated in the area. Present industrial and commercial zoning in the Kingman Airpark and along highway I-40 and AZ 68 present the potential for greater industrial use of water resources which cannot be quantified at this time.

Groundwater supplies: total and annual average

Given the available information on the geology of the basins and groundwater pumping, ADWR has calculated a preliminary estimate of groundwater levels and the amounts stored in the aquifers of the two basins to a depth of 1,200 feet below the land surface. Combining this information with data from well logs, geology, and well sampling, an estimate of the potential annual available water supplies in the basins has been made as well. These estimates are meant to be used as a guide in evaluating the availability of water resources for future needs in the basins and may change with additional information.

Water stored in the Hualapai Valley basin to 1,200 feet below land surface is 5,000,000 acre-feet. Of this, 1.9 million acre-feet is practically available south of Long Mountain to depth of 1,000 feet and an additional 1.1 million acre-feet is stored north of Long Mountain. Within these aquifers, an annual water supply of 19,000 and 11,000 acre-feet would be available. It should be noted that no estimates of aquifer recharge are included in the estimates of water availability.

In Sacramento Valley, a total estimated 7,000,000 acre-feet of groundwater is stored in the basin. However, only an estimated 800,000 acre-feet is stored in the aquifer underlying the Golden Valley area, an area including 8 miles north and south along Highway 68. Extending from this area to Yucca is an estimated additional 1.5 million acre-feet of storage to 1,200 feet below land surface. The total available groundwater in storage to 1,200 feet, then is approximately 2.3 million acre-feet of the 7.0 million in the

basin. On an annual basis, about 4,000 acre-feet is available from the aquifer in the immediate area of Golden Valley with an additional 16,000 acre-feet per year from the aquifer underlying the area to Yucca. Given these estimates, then, an estimated 20,000 acre-feet per year is available in the 30 mile area of the valley from Golden Valley to Yucca.

Comparing Demand with Supply

Groundwater supply and demand by basin in acre-feet per year for the years 1990 through 2040 is detailed in the following table.

Kingman Area Groundwater Fact Sheet			
Groundwater Supply and Demand by Basin in acre-feet per year 1990 and 2040			
Basin:	Demand (acre-feet per year)		Supply (acre-feet per year)
	1990	2040	For 100 Years
Sacramento Valley Basin			
Golden Valley*	1,258	3,240	4,000
Remainder of Basin**	-unknown-	-unknown-	16,000
Hualapai Valley Basin			
Total Basin	6,137	12,832	30,000
Total Both Basins	7,395	16,072	50,000
* Area 8 miles north or south of Highway 68 across the entire Basin ** Includes area of Sacramento Valley groundwater basin south of Golden Valley			

In 1990, demand for water in the Golden Valley area of the Sacramento Valley groundwater basin was an estimated 1,258 acre-feet, including water used by the Cyprus Mineral Park. By 2040, demand will increase to an annual use of 3,240 acre-feet including an estimated 1,000 acre-feet to supply industrial needs. The steel recycling plant recently announced for the area may generate a host of steel fabrication

manufacturing companies and may increase the demand for water for industrial purposes in the future.

The Department estimates that there is an adequate supply of groundwater of about 4,000 acre-feet per year available in the Golden Valley area of the basin. This annual supply will allow development in the area for somewhat more than 50 years. However, the amount of available groundwater supply clearly shows the limits on future groundwater use in the area.

In the area of Sacramento Valley south between Golden Valley and the community of Yucca, much more groundwater is in storage and is estimated to yield about 16,000 acre-feet per year. Presently, there is no demand forecast other than Yucca for the area but the possibility of industrial development along interstate highway 40 could increase demand for water significantly.

Overall, adequate average annual groundwater supplies in the basin exceed projected annual demands although the immediate area of Golden Valley, eight miles north and south of state highway 68, could experience problems if actual growth is greater than that projected.

Demand for water in the Hualapai Valley, from the two aquifers lying north and south of Long Mountain, associated with the City of Kingman and New Kingman-Butler, was an estimated 6,137 acre-feet in 1990. Projected municipal and industrial demand for the same area through the year 2040 is 12,800 acre-feet.

The aquifer south of Long Mountain is capable of supplying a total of 30,000 acre-feet per year, from which current supplies are pumped. However, there are proven reserves north of Long Mountain and can be brought to the city through a pipeline.

The Department would conclude from this analysis that groundwater supplies available to the Kingman area are adequate and can accommodate the projected growth in population and industry. In areas where the aquifer may not have the capability of providing groundwater supplies much in excess of projected demands, transfers via pipeline from other parts of the basin or, for the City of Kingman, may from one basin to the other be used to meet those needs.

III. Conclusions

AMA Management Regulations and Practices

Departmental staff reviewed the types of protection that AMA practices might provide for the two basins. Since augmentation of the water supply from the Colorado River appears to be too expensive to be feasible at this time, long term growth is dependant on depletable groundwater supplies. Conservation practices would reduce the rate of increase in water demand, thereby extending the life of the basins. But if withdrawals of groundwater for mining activities increase, AMA practices cannot substantially protect Pioneer Water Company from the impact of water level declines caused by groundwater withdrawals for mining. Furthermore, AMA restrictions on service area expansions may not allow placement of wells outside of service areas. Such a restriction would take away one type of supply management which will be necessary to mitigate declining water levels in localized areas such as Golden Valley. It was concluded that AMA practices would not provide the best management practices to ensure the long term water supplies for future needs of the area at this time.

Hualapai Groundwater Basin Supplies

There appears to be sufficient groundwater to meet the projected 100 year demands of the Kingman area. The Department projects decline rates in the groundwater table of approximately 2.0 feet-per-year in the aquifer underlying the

city's well fields in the Hualapai Valley. Total decline is estimated to result in depths to water of 744 feet below land surface. The total projected demand for 2040 in the Hualapai groundwater basin near Kingman is 12,800 acre-feet per year, but approximately 19,000 acre-feet per year for one-hundred years can be withdrawn before depths to water reach 1200 feet below land surface. Another 11,000 acre-feet per year for one-hundred years could be withdrawn north of Long Mountain.

Sacramento Groundwater Basin Supplies

The Department projects decline rates in the groundwater table of approximately 1.5 feet-per-year in the aquifer underlying the Golden Valley area. Total demand in the Golden Valley area of Sacramento groundwater basin is projected to be 3,240 acre-feet per year by 2040, but approximately 4,000 acre-feet per year for one-hundred years can be withdrawn from the area before the depth of water exceeds 1200 feet below land surface. More water is available south of Golden Valley. The department estimates that approximately 1.5 million acre-feet is in storage, and that 16,000 acre-feet per year can be withdrawn for 100 years.

Pioneer Water Company

If the Pioneer Water Company continues pumping from its present wells in the Golden Valley area, water levels are projected to decline to approximately 1,200 feet below land surface within one hundred years.

Subsidence

At this time, there is no evidence that subsidence or fissuring is endangering property or groundwater storage capacity in either basin.

Water Quality

There is no evidence that the continuing use of groundwater is resulting in actual or threatened water quality degradation. Although, Kingman has reported the presence of natural chromium in its wells, the water supply currently conforms to national drinking water standards.

Public Review and Conclusions

On March 24, 1994, Departmental staff met with Mohave County officials, City of Kingman officials, Noel Labonte of the Pioneer Water Company and Cyprus Minerals Company officials to explain our analysis and receive further input. (Exhibit 2) Those persons at the meeting were asked if they thought an AMA would be appropriate at this time for either Sacramento or Hualapai groundwater basin. No one at the meeting recommended that an AMA be established. Both the City and the County officials responded that local management actions were being considered to ensure that long term water supplies will be available for growth. Management actions which were mentioned as possibilities included water supply studies; effluent reuse and other conservation measures; and development of a County Water Authority pursuant to S.B. 1078 which will facilitate the use of Colorado River water and make funding available for water supply development.

IV. Recommendations

Since the analyses of the water supplies and projected demands for the Sacramento Valley and Hualapai basins indicate that sufficient water supplies are available, and the local governments and other water suppliers do not want to use Active Management practices to address their water supply and demand problems, the departmental staff does not recommend that an AMA be established at this time for these two groundwater basins.

Exhibits:

1. Correspondence
2. Agenda for Meeting: March 24, 1994
   3/24/94 Kingman Meeting Attendance
3. Fact Sheets

Exhibit 1
Correspondence

VALLEY PIONEERS WATER CO, INC.
3155 North McNeal Road
Golden Valley, Arizona 86413
(602) 565-4663

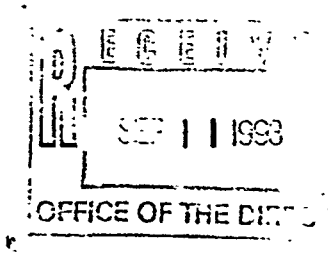

September 6, 1993

Arizona Department of Water Resources
15 South 15th Avenue
Phoenix, Arizona 85007

Attention: Elizabeth Ann Rieke, Director

Reference: Sacramento Valley, Mohave County, Arizona
Active Management Area, Request for Designation

Dear Ms. Rieke:

This letter is to formally request that the Sacramento Valley, and specifically the Mohave County approved franchise areas of GVID # 1 and our company, at this time considered for immediate review and possible designation as an Active Management Area.

The reason for this request is the proposed major industrial development to the immediate south of the two areas that currently provide water services to metered customers. The proposals do not take into account the water quality degradation and considerable investment by our company and the Golden Valley Improvement District # 1, operated by Mohave County. It is felt that the documented declining water table (reference your letter of October 18, 1991) and the proposed commercial development and water usage constitutes the necessary conditions to institute active management practices to preserve the existing supply of groundwater for future needs.

The reason for our specific concern is the presence of the five commercial wells that are located in the county approved franchise area of this company and outside our management control. We are aware of the previous degradation of the water table when these wells were operated at full capacity between 1965 and 1990. It is our opinion that unrestricted usage may potentially have a negative impact on previously released reports of adequacy of water supply issued by the Arizona Department of Water Resources. A meeting of representatives of Mohave County, this company, the parties involved, and your department appears to be in order, and is requested.

Sincerely yours,

Noel H. Labonte
President
V. P. W. Co., Inc.

azdwr01.wri

MOHAVE-003

ARIZONA DEPARTMENT OF WATER RESOURCES

15 South 15th Avenue, Phoenix, Arizona 85007
Telephone (602) 542-1553
Fax (602) 542-3383

FIFE SYMINGTON
Governor

RITA P. PEARSON
Director

October 21, 1993

Mr. Noel H. Labonte
Valley Pioneers Water Company, Inc.
3155 North McNeal Road
Golden Valley, Arizona 86413

Dear Mr. Labonte:

The department has received your letter of Sept. 6, 1993 requesting a review of the hydrologic conditions in the Sacramento Valley groundwater basin and a determination of whether the basin would qualify to be designated as an Active Management Area. Your request is under review at this time. After we have completed our preliminary studies we will contact you to discuss this matter further.

For your information, the following determinations and procedures are required by statute when an area is being considered for active management status. The director of the department may designate an active management area only if: 1) active management practices are necessary to preserve the existing supply of groundwater for future needs; 2) land subsidence or fissuring is endangering property or potential groundwater storage capacity; or, 3) the use of groundwater is resulting in actual or threatened water quality degradation. If the director proposes to designate an active management area, she must hold a public hearing to consider whether to issue an order to declare an active management area and the extent of the boundaries of the proposed area. An active management area may not be smaller than a groundwater basin. The director must give full consideration to public comment and to recommendations made by local political subdivisions.

An active management area can be created by local initiative if ten percent of the registered voters petition to form an area and the petition is approved in a subsequent election.

Before the department makes a decision regarding the formation of an active management area in the Sacramento Valley, we will prepare a hydrologic report and discuss the need for water management practices with local concerned parties and political subdivisions. After the Department has obtained more information, a decision whether to schedule a public hearing will be made.

At this time the Department expects that preliminary studies will be completed in ten to twelve weeks. If necessary, informal meetings will be scheduled to explain the Department's finding. Thank you for your letter of inquiry. Please contact me at the above address and phone number if you have additional questions.

Sincerely,

Thomas Carr
Assistant Deputy Director

TC:bdj

WATER MANAGEMENT
PROGRAM PLANNING & MANAGEMENT
15 S. 15TH AVENUE
PHOENIX, ARIZONA 85007
542-1546/FAX 542-3383

MEMORANDUM

TO: Stephen Szyprowski

FROM: Thomas Carr, Assistant Deputy Director

DATE: October 22, 1993

SUBJECT: Request for Hydrologic review for Sacramento Valley.

Please prepare a report on water supply and demand conditions in the Sacramento and Hualapai groundwater basins for the purposes of evaluating whether one or both basins should be declared an AMA. The report needs to include a description of historical groundwater depletions, subsidence and locations of groundwater declines. Please describe on maps the location of current points of withdrawals, transportation and use of groundwater. Note any water supply shortages or limits to the availability of groundwater for current of projected municipal and industrial water demands. Please include all relevant references.

Attached is the request from Pioneers Water Company, Inc. and my preliminary response. I have indicated to Mr. Labonte that we need ten to twelve weeks to complete our review. If you need any help from my staff with this work effort, please let me know.

MOHAVE COUNTY BOARD of SUPERVISORS

P.O. Box 7000 809 EAST BEALE KINGMAN, ARIZONA 86402-7000
Telephone (602) 753-0729 FAX (602) 753-0732 TDD (602) 753-0726

Dist. 1
Sam Standerfer

Dist. 2
Joan C. Ward

Dist. 3
Pat Holt

County Manager
David J. Grisez, P.E.

Clerk of the Board
Patsy A. "Pat"
Chastain

February 17, 1994

Mr. Steve Jenkins
AZ DEPARTMENT OF WATER RESOURCES
15 S 15th Avenue
Phoenix, AZ 85007

RE: Sacramento Valley Groundwater Basin

Dear Mr. Jenkins:

This letter will confirm a meeting scheduled for March 24, 1994 at 2:00 P.M. in the Board of Supervisors Conference Room located at 809 E. Beale Street, Kingman, AZ. The City of Kingman and Mohave County personnel have also been advised of the meeting.

If you have any questions, please call.

Yours truly,

David J. Grisez, P.E.
County Manager

DJG/yo

ARIZONA DEPARTMENT OF WATER RESOURCES

15 South 15th Avenue, Phoenix, Arizona 85007
Telephone (602) 542-1553
Fax (602) 542-3383

FIFE SYMINGTON
Governor

RITA P. PEARSON
Director

March 9, 1994

Veryl Morrell
Mohave County Planning and Zoning Dept.
3675 East Highway 66 Suite A
Kingman, AZ 86402-7000

Dear Mr. Morrell:

As you know, the Department of Water Resources is performing an assessment of the water availability and demand in the Sacramento Valley and Hualapai Valley groundwater basins in Mohave County. Our Hydrology Division is identifying ground-water supplies and we are assessing potential demands for this water.

We have developed municipal water demands from projections of population for the areas involved and have used available information to develop some projections of industrial water demands. However, we feel that some additional work could be done to project industrial water demands. Even through there is little available on the types of companies that could locate in the area, industrial and commercial zoning may indicate some possibilities.

Would you please help us by enumerating any commercial and industrial zoning currently in the area bounded by Sacramento Valley groundwater basin including that along I-40 and the railroad tracks from Kingman to Yucca, along the Oatman Road, and Highway 68 between Kingman and the Black Mountains.

This information will be very helpful in projecting industrial demands in the Sacramento Valley basin.

I look forward to meeting you on March 24.

Sincerely,

Stephen J. Jenkins

MOHAVE-003

ARIZONA DEPARTMENT OF WATER RESOURCES

HYDROLOGY DIVISION

M E M O R A N D U M

TO: **Tom Carr**

FROM: **Steven Szyprowski** S.S.

DATE: April 27, 1994

SUBJECT: Water Quality in Kingman

Groundwater quality in the city's well field area is comparable with other alluvial basins in Arizona. The only trace metal, which in some wells exceeds the 0.05 mg/l state maximum contaminant level, is chromium.

Chromium levels in Kingman's wells range from less than 0.01 to 0.098 mg/l. In 1992 EPA increased the national drinking water standard for chromium to 0.1 mg/l. After that the Arizona DEQ granted the City of Kingman an exclusion from the 0.05 mg/l requirement. The city conforms with the exclusion and is in compliance with the DEQ's monitoring requirements. Some consultants indicated that chromium levels may be increasing below the 1000-foot depth. There are no conclusive tests to support this

opinion. However, given that such a possibility may occur in an alluvial basin, our finding of adequacy was conservatively limited to groundwater resources above the 1000-foot depth. Our projections indicate that the one-hundred-year demand of the 2040 population equal to over 12,000 acre-feet per year will not lower the water level below 770 feet below land surface. In addition, if necessary, chromium content in drinking water can be lowered by over 90 percent by reversed osmosis. For the foreseeable future, blending will remain the practical solution.

Steven

Exhibit 2
Agenda, 3/24/94

KINGMAN AREA GROUNDWATER BASIN STUDY

ARIZONA DEPARTMENT OF WATER RESOURCES

BOARD OF SUPERVISORS CONFERENCE ROOM
809 EAST BEALE STREET
KINGMAN, ARIZONA

MARCH 24, 1994
2:00 PM

I. INTRODUCTION: SETTING, PURPOSE AND SCOPE OF THE STUDY

II. ANALYSIS

- A. POPULATION TRENDS AND PROJECTIONS: 1990 TO 2040
- B. DEMAND FOR WATER RESOURCES: 1990 TO 2040
- C. GROUNDWATER SUPPLIES: TOTAL AND ANNUAL AVERAGE
- D. COMPARING DEMAND WITH SUPPLY

III. CONCLUSIONS

3/24/94 Kingman meeting

Attendance:

Hon. Carol Henderson, Mayor of Kingman

Hon. Charles Orr, Kingman City Council

Hon Lester Byram, Kingman City Council

George Veach, Cyprus Mineral Park

Richard Skalicky, Mohave County Public Works Director

David Grisez, Mohave County Manager

Donald W. Van Brunt, Mohave County Economic Development Authority

Fred Eldean, Mohave County Economic Development Authority

N.J. Devlin, P.E., Civil Engineer and Land Surveyor

Noel H. Labonte, Valley Pioneer Water Company

Ed Covington, City of Kingman, Director of Public Works

Veryl Morrell, Mohave County Planning and Zoning Department

Dennis Roberts, City of Kingman, Community Development

Exhibit 3
Fact Sheets

Kingman Area Fact Sheet

MOHAVE-003

Kingman Area Groundwater Fact Sheet

Groundwater Supply and Demand by Basin in acre-feet per year
1990 and 2040

Basin:	Demand (acre-feet per year) 1990	Demand (acre-feet per year) 2040	Supply (acre-feet per year) For 100 Years
Sacramento Valley Basin			
Golden Valley*	1,258	3,240	4,000
Remainder of Basin**	-unknown-	-unknown-	16,000
Hualapai Valley Basin			
Total Basin	6,137	12,832	30,000
Total Both Basins	7,395	16,072	50,000

* Area 8 miles north or south of Highway 68 across the entire Basin
** Includes area of Sacramento Valley groundwater basin south of Golden Valley

MOHAVE-003

Kingman Area Groundwater Basin Fact Sheet			
GENERAL INFORMATION	Basins		
	Sacramento Valley	Hualapai Valley	Combined Basins
Area of Basin (square miles)	1,400	1,820	3,220
Aquifer Area (square miles)	500	350	850
Principal Aquifer	Older Alluvium	Older Alluvium	
Land Surface Elevation (feet above mean sea level)	500 to 8,917	1,300 to 7,150	
Main Drainage	Sacramento Valley	Truxton & Hualapai Washes	
1990 Population (1990 Census)			
City of Kingman	3,180	9,542	12,722
New Kingman-Butler		11,627	11,627
Golden Valley	2,619		2,619
Total Basin Population	7,884	22,405	30,289
2040 Population (DES Projection)*			
City of Kingman	9,280	27,839	37,119
New Kingman-Butler		34,479	34,479
Golden Valley	7,772		7,772
Total Basin Population	20,998	66,220	87,218
* ADWR projections based on DES/POPTAC 1993 adopted population projections			

MOHAVE-003

Kingman Area Groundwater Basin Fact Sheet			
GROUNDWATER DEMAND CURRENT DEMAND (acre-feet per year)	Basins		
	Sacramento Valley	Hualapai Valley	Combined Basins
Municipal Demand			
Cerbat Water Company (1992)		22	22
Cholride (1992)	10		10
City of Kingman/New Kingman-Butler (1991)**	450	6,050	6,500
GVCID #1 (1991)	48		48
Valley Pioneer (1992)	372		372
Walnut Creek (1992)	19		19
Yucca Water (1992)	36		36
Truxton Canyon Water Company (1992)		65	65
Total Municipal Demand	935	6,137	7,072
Industrial Demand			
Cyprus Mine (1993)	323		323
Total Industrial Demand	323	0	323
Total Municipal & Industrial	1,258	6,137	7,395
** New Kingman-Butler served by City of Kingman			

MOHAVE-003

Kingman Area Groundwater Basin Fact Sheet			
GROUNDWATER DEMAND Projected M & I Demand for year 2040 (acre-feet per year)	Basins		
	Sacramento Valley	Hualapai Valley	Combined Basins
Municipal Demand			
TOTAL***			
@ 2.1 Persons per Lot	2,240		2,240
@ 173 GPCD		12,832	12,832
Cerbat Water Company		22	22
Cholride	10		10
City of Kingman/New Kingman-Butler	450	12,076	12,526
GVCID #1 (committed by ADWR)	773		773
Valley Pioneer (committed by ADWR)	515		515
Walnut Creek	312		312
Yucca Water	36		36
Truxton Canyon Water Company		65	65
Sub-Total	1,342	12,163	13,505
Remaining Municipal Demand	898	669	1,567
Total Municipal	2,240	12,832	15,072
Industrial Demand			
Cyprus Mine (1993)	0		
Other Industrial	1,000		1,000
Total Industrial Demand	1,000		
Total Mining & Industry	3,240	12,832	16,072
*** Using population projections based on DES/POPTAC 1993 projections			

MOHAVE-003

Kingman Area Groundwater Basin Fact Sheet			
GROUNDWATER SUPPLY	Basins		
	Sacramento Valley	Hualapai Valley	Combined Basins
1. Groundwater stored in aquifer to 1,200 ft. bls (acre-feet)****			
Total	7,000,000	5,000,000	12,000,000
2. Groundwater Available in aquifer to 1,200 ft. bls for use in area (acre-feet)			
a) City of Kingman/Kingman North-Butler			
South of Long Mountain		1,900,000	1,900,000
North of Long Mountain		1,100,000	1,100,000
b) @ 8 miles North & South of Highway 68	800,000		800,000
c) Basin from Yucca extending North to @ 8 miles South of Highway 68	1,500,000		1,500,000
Total available storage to 1,200 ft. bls	2,300,000	3,000,000	5,300,000
3. Groundwater storage in aquifer to 1,200 ft. bls in balance of basin		65	65
Total	4,700,000	2,000,000	6,700,000
4. Projected annual groundwater withdrawal to 1,200 ft. bls			
a) City of Kingman/Kingman North-Butler			
South of Long Mountain		19,000	19,000
North of Long Mountain		11,000	11,000
b) @ 8 miles North & South of Highway 68	4,000		4,000
c) Basin from Yucca extending North to @ 8 miles South of Highway 68	16,000		16,000
Total annual withdrawal to 1,200 ft. bls	20,000	30,000	50,000
**** Below land surface			

MOHAVE-003

Hualapai Basin Fact Sheet

HUALAPAI BASIN GROUNDWATER FACT SHEET

General Basin Information

o	Area of Basin	1,820 square miles
o	Aquifer area	350 square miles
o	Principal aquifer	Older alluvium
o	Land surface elevations	1,300 to 7,150 feet above mean sea level
o	Main drainages	Truxton and Hualapai Washes (ephemeral)
o	Current Basin population	22,405 (DES, 1990)
o	Current greater City of Kingman population	12,722(DES, 1990)
o	2040 Basin population	66,220 (DES projections)
o	2040 greater City of Kingman population	62,318(DES projections)

A. Groundwater Demand

1. Current Demand (acre-feet/year)

o	City of Kingman	6050	(Cella Barr, 1990)
o	Truxton Canyon Water Company	65	(ACC, 1992 Annual Report)
o	Cerbat Water Company	22	(ACC, 1992 Annual Report)
	TOTAL	6137	

2. 2040 Projected Basin Demand (acre-feet) (based on 2040 DES population projections)

o 66,220 people x 173 gpcd = 12,832 acre-feet (173 gpcd by Willdan Associates, 1993)

3. 2040 Projected City of Kingman Demand (based on 2040 DES population projections)

o 62,318 people x 173 gpcd = 12,076 acre-feet

B. Groundwater Supply

1. Groundwater Supplies (acre-feet)

o	Total basin groundwater in storage	5,000,000	(to 1200 feet bls) (ADWR)
o	City of Kingman	1,900,000	(to 1000 feet bls or 19,000 AF/yr for 100 years) (ADWR)

- Only one City of Kingman well had a penetrated aquifer depth of 1200 feet bls. The average city well depth is 1000 feet bls which ADWR currently uses for groundwater in storage estimates.

- North of Long Mountain, the deepest penetrated depth of a well was 2300 feet bls (Technical Consultants, 1990). The Hafley Family Limited Partnership which contains 8,960 acres has estimated groundwater in storage of 1,145,160 acre-feet (Technical Consultants, 1990).

2. **Current Depth to water** (feet bls)

o	City of Kingman			
	Well #4	B(22-16) 34cbc	642	(ADWR, 1991)
	Well --	B(22-16) 28bad	538	(ADWR, 1991)
	Well #6	B(22-16) 17ddd	562	(ADWR, 1991)
	Long Mt., #6	B(22-16) 15ccc	520	(ADWR, 1991)
		Average	566	
o	Cerbat Water Company			
	Well #1	B(22-16) 7ca?	670	(Manera, 1978)

3. **Water Level Declines** (feet/year) ADWR

o	City of Kingman	Well #4	11 years	1.9
		Well B(22-16) 28bad	11 years	1.3
		Long Mt. #6	11 years	2.0
		Well B(22-16) 27ddd	5 years	1.1 (SE edge of airport)
		Well B(22-16) 3cbb	11 years	0.9 (2.5 miles N of Long Mt. #6 Well)
			Average	1.4

4. **Deepest Penetrated Depth of Aquifer** (feet bls) (ADWR Driller Logs)

o	City of Kingman	Well B(22-16) 17ddd	1200

5. **Average Saturated Thickness of Aquifer** (to a depth of 1000 feet bls.)

o	City of Kingman	434 feet

6. **Well Yield** (gallons per minute) (Schmidt & Associates, 1993)

o	City of Kingman	From 500 to over 2,000

7. **Quality of Groundwater** (Schmidt & Associates, 1993)

o	City of Kingman	Chromium levels exceeding MCLs in 5 city wells. Chromium levels apparently increase with depth.

C. Impact of Pumpage on Water Levels

1. Declines associated with current pumpage of about 6050 AF/year equal to an average of 1.4 feet per year or 140 feet in 100 years.

2. Additional declines associated with projected additional pumpage of 6026 AF/year equal to 60 feet in 100 years.

3. Cumulative declines at total projected pumpage of 12,076 AF/year equal to 200 feet in 100 years.

4. Average depth to water level after 100 years should equal 766 feet bls.

D. Conclusions

1. There is an adequate water supply for the 2040 projected population growth for 100 years.

2. There are groundwater supplies in excess of future groundwater demands for industrial needs.

Hualapai Cross Section

LEGEND

HUALAPAI and SACRAMENTO BASINS

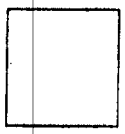

ALLUVIUM

Clay, Silt, Sand, Gravel

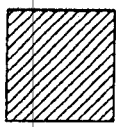

VOLCANICS

Basaltic Rocks

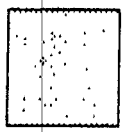

IGNEOUS & METAMORPHIC

Granitic Rocks

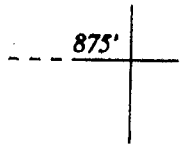

WATER LEVEL

in Feet Below Land Surface

Dashed Where Inferred

DEPTH OF WELL

Feet Below Land Surface

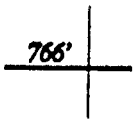

PROJECTED WATER LEVEL

After 100 Years of Pumping

BLOCK FAULT

MOHAVE-003

HUALAPAI VALLEY

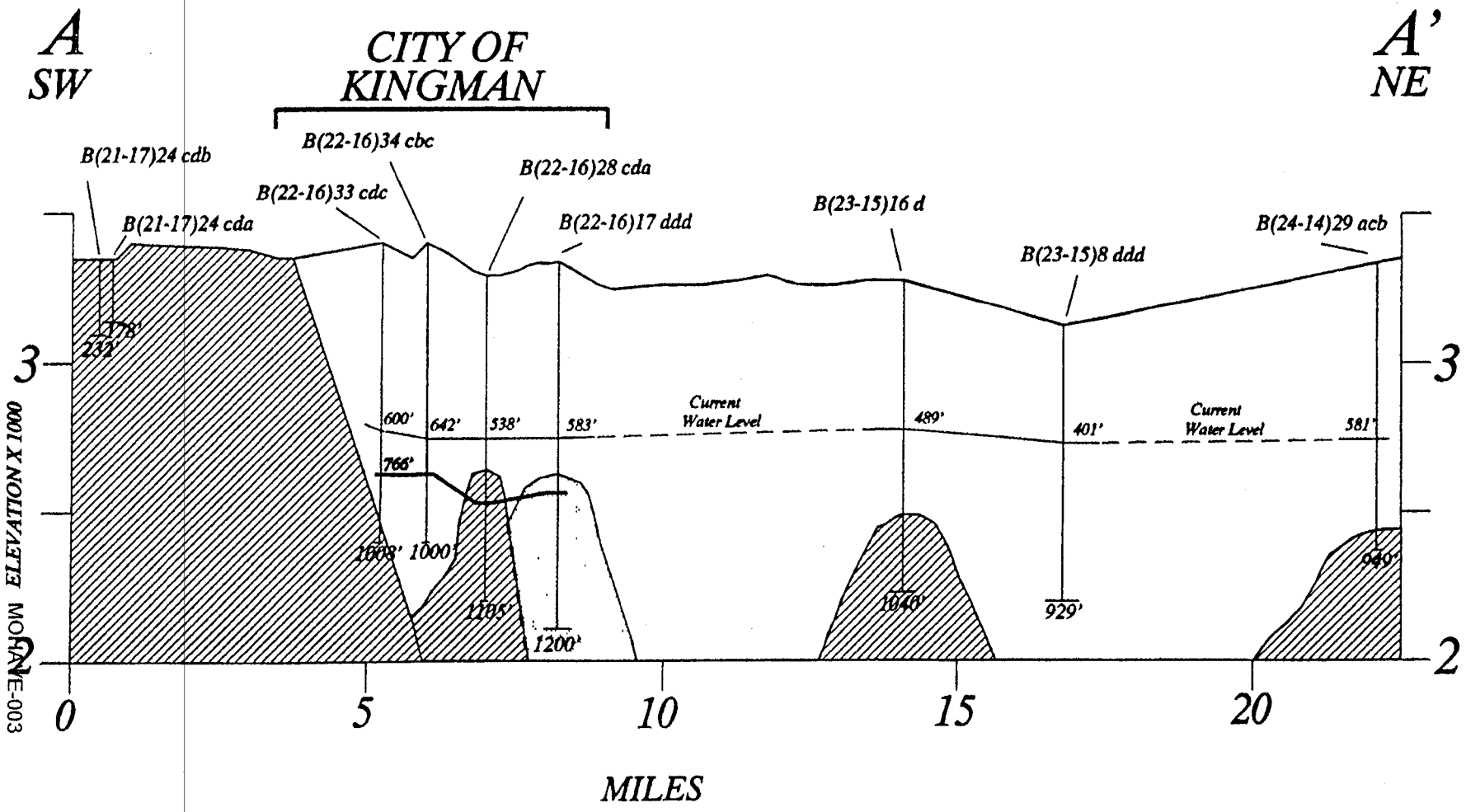

Sacramento Valley Fact Sheet

SACRAMENTO VALLEY BASIN GROUNDWATER FACT SHEET

General Basin Information

o	Area of basin	1,400 square miles
o	Aquifer area	500 square miles
o	Principal aquifer	Older alluvium
o	Land surface elevations	500 to 8,917 feet above mean sea level
o	Main drainage	Sacramento Wash (ephemeral)
o	Current basin population	7884 (1990 DES)
o	Current Golden Valley population	2619 (1990 DES)
o	2040 basin population	20,998 (DES)
o	2040 Golden Valley population	7,772 (DES)

A. Groundwater Demand

1. **Current Demand** (acre-feet)

o	GVCID #1	(1991)	48	(Manera, 1991)
o	Valley Pioneer	(1992)	372	(ACC annual records)
o	Cyprus Mineral Mine	(1993)	323	(George Veach, 1994)
o	Yucca Water	(1992)	36	(ACC annual records)
o	Walnut Creek	(1992)	19	(ACC annual records)
o	City of Kingman	(1991)	450	(ADWR, 1991/Sacramento Valley portion)
o	Chloride	(1992)	10	(ACC annual records)
		TOTAL	1258	

2. **Committed Demand** (acre-feet/year) (demand of existing recorded lots not yet served)

o	GVCID #1		773	(Manera, 1991)
o	Valley Pioneer		232	(Anderson-Nelson, 1991)
		TOTAL	1005	

3. **Projected Demand** (acre-feet/year) (based on build-out)

o	GVCID #1		11,579	(ADWR, 1994)
o	Valley Pioneer		240	(ADWR, 1994)
o	Cyprus Mineral Mine		800	(George Veach, 1994)
		TOTAL	12,619	

4. **2040 Projected Basin Demand** (acre-feet/year) (based on DES 2040 population projections)

   20,998 people x 95 gpcd* = 2240 AF/YR *gpcd based on 200 gal/day/lot (Manera, 1991) and 2.1 people per dwelling unit (census population density)

5. **2040 Golden Valley Area Projected Demand** (acre-feet/year) (based on 2040 DES population projections)

   7,772 x 95 gpcd = 827 AF/YR

Golden Valley Improvement District	515 AF/YR
Valley Pioneer Water Company	312 AF/YR

B. Groundwater Supply

1. **Groundwater Supplies to 1200 Feet Below Land Surface** (acre-feet)

   - Total basin groundwater in storage 7,000,000 (ADWR, 1988)
   - GVCID #1 (ADWR's water availability letter, 1991) 1400 acre-feet/year for 100 years
   - Valley Pioneer (ADWR's water availability letter, 1991) 844 acre-feet/year for 100 years.
   - Below 1000 feet, increasing amounts of clay, volcanic ash and lava decrease the aquifer's ability to transmit and store groundwater.

2. **Current Depth to Water** (feet bls)

o	Valley Pioneer	
	Well #1 B(21-18)9bba (ADWR)	1055 (year 1990)
	Well #2 B(21-18)5dbd (A.N.)	1061 (year 1990)
	Well #3 B(21-18)8bbb (A.N.)	1066 (year 1990)
	Well #4 B(21-18)8aab (A.N.)	1045 (year 1991)
	Average	1057
o	GVCID #1	
	B(21-19) 13ddd (Manera)	921 (year 1991)
	B(21-19) 25aaa (Manera) (Crystal Springs)	866 (year 1991)
	B(21-19) 2ddd (Stoval)	1017 (year 1987)
	Average	935
o	Cyprus	
	B(21-18) 30abb (ADWR)	875 (year 1990)
	B(20-18) 4bbb (ADWR)	750 (year 1990)
	B(21-18) 32bbb (ADWR)	810 (year 1990)
	B(20-18) 20caa (ADWR)	894 (year 1990)
	Average	832

3. **Water Level Declines** (feet/year) (ADWR)

- GVCID #1
  - Average area decline — 0.75 (Manera, 1991)
- Valley Pioneer
  - B(21-18) 9bba, 25 years — 1.2 (ADWR Hydrograph B)
- Cyprus

B(21-18) 30abb, 26 years	1.2 (ADWR Hydrograph C)
B(20-18) 4bbb, 26 years	0.5 (ADWR Hydrograph E)
B(21-18) 32bbb, 26 years	0.7 (GWSI files=USGS/ADWR)
B(20-18) 20caa, 26 years	0.9 (GWSI files=USGS/ADWR)
Average	0.8

4. **Deepest Penetrated Depth of Aquifer** (feet bls.) (ADWR records)

o	GVCID #1	in well B(21-19) 13ddd	1335
o	Valley Pioneer	in well B(21-18) 9bba	1518
o	Cyprus	in well B(21-18) 30abb	1385

5. **Saturated Thickness of Aquifer** (To a depth of 1200 feet bls.)

o	GVCID #1	Average of three wells, 265 feet
o	Valley Pioneer	Average of four wells, 143 feet
o	Cyprus	Average of four wells, 368 feet

6. **Well Yields** (gallons per minute)

o	GVCID #1	Up to 700 (Manera, 1991)
o	Valley Pioneer	100 to 200 (Anderson-Nelson, 1991)
o	Cyprus	Up to 850 (ADWR, 1991)

7. **Quality of Groundwater**

- Of acceptable drinking water standards (ADWR, 1991)

C. **Impacts of Pumpage on Water Levels**

1. Drawdown from future pumpage for 100 years (Cyprus for 15 years)

- GVCID #1: 75 feet current drawdown for 100 years (at 0.75 ft/yr)
  plus Theis drawdown of an additional 100 feet = Total 175 feet
  (48 AF present - 1352 AF future pumpage)
  Average water level in 100 years: 1110 feet bls.

- Valley Pioneer: 120 feet current drawdown for 100 years (at 1.2 ft/yr)
  plus Theis drawdown of an additional 70 feet = Total 190 feet
  (372 AF present - 472 AF future pumpage)
  Average water level in 100 years: 1247 feet bls.

- Cyprus: 90 feet current drawdown for 100 years (at 0.9 ft/yr)
  plus Theis drawdown of an additional
  80 feet = Total 150 feet
  (322 AF present - 800 AF future pumpage)
  Average water level in 100 years: 832 feet bls.

D. Conclusions

1. There is an adequate supply for all current and committed demands of the GVCID #1 and for at least an additional 795 dwelling units (see ADWR letter of water availability of March 29, 1993).

2. There is an adequate supply for all current and committed demands of the VPWC and for at least 330 additional dwelling units (see ADWR letter of availability of December 4, 1991).

3. There is an adequate supply for the projected demand of the Cyprus Mineral Mine at 800 af/yr for 15 years. This groundwater withdrawal is not subject to the adequacy of water supply law under A.R.S. §45-108 which applies to subdivisions only.

4. There is an adequate supply for the proposed North Star industrial plant of about 1000 af/yr which is also not regulated by the adequacy law.

Sacramento Cross Section

LEGEND

HUALAPAI and SACRAMENTO BASINS

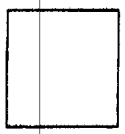

ALLUVIUM

Clay, Silt, Sand, Gravel

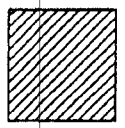

VOLCANICS

Basaltic Rocks

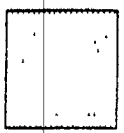

IGNEOUS & METAMORPHIC

Granitic Rocks

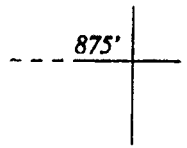

WATER LEVEL

in Feet Below Land Surface

Dashed Where Inferred

DEPTH OF WELL

Feet Below Land Surface

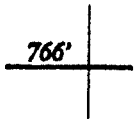

PROJECTED WATER LEVEL

After 100 Years of Pumping

BLOCK FAULT

MOHAVE-003

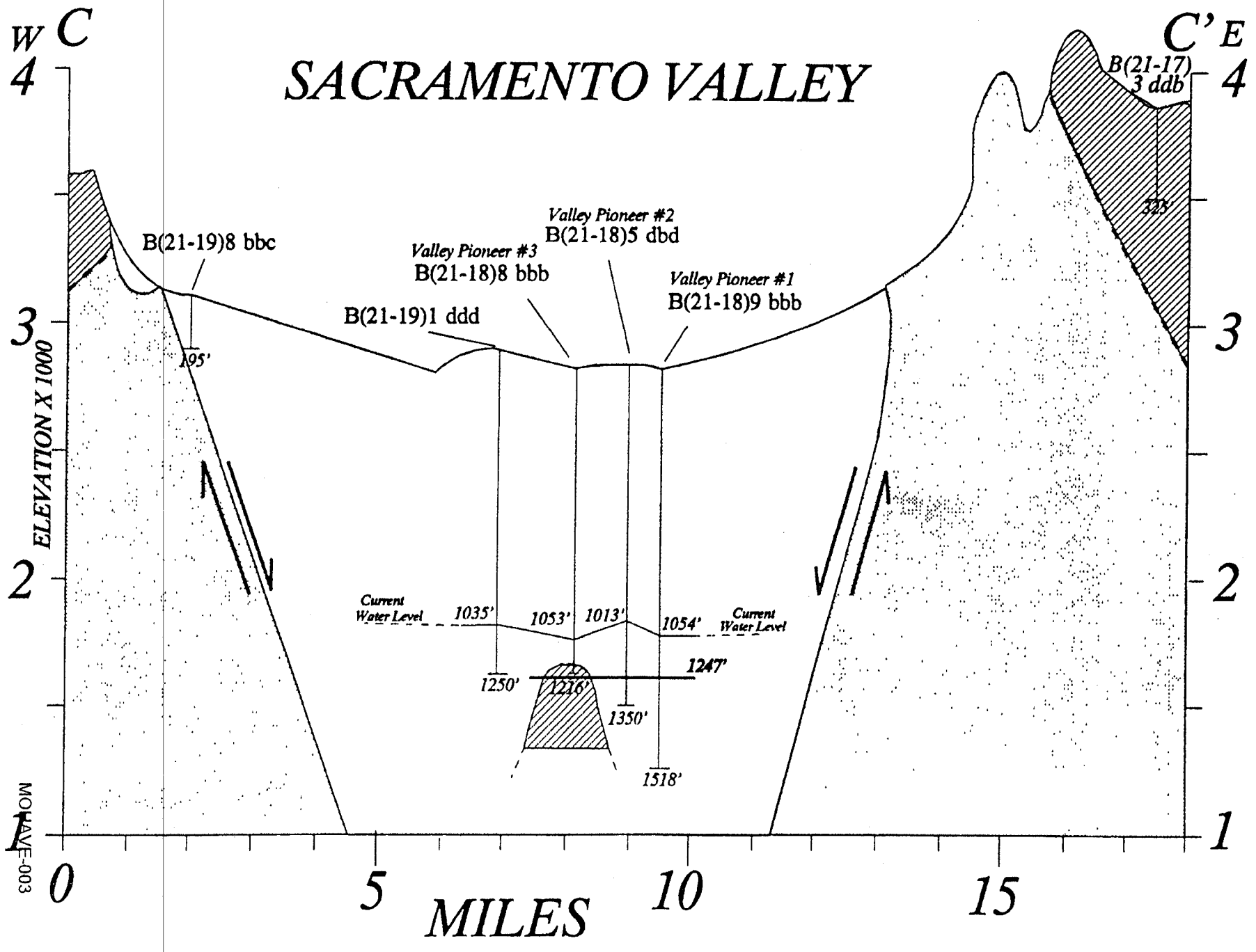
W
C
C'
E
SACRAMENTO VALLEY
B(21-19)8 bbc
Valley Pioneer #3
B(21-18)8 bbb
Valley Pioneer #2
B(21-18)5 dbd
Valley Pioneer #1
B(21-18)9 bbb
B(21-19)1 ddd
B(21-17)
3 ddb
195'
325'
ELEVATION X 1000
Current
Water Level
1035'
1053'
1013'
1054'
Current
Water Level
1247'
1250'
1216'
1350'
1518'
4
3
2
1
0
5
10
15
MILES
MOJAVE-003

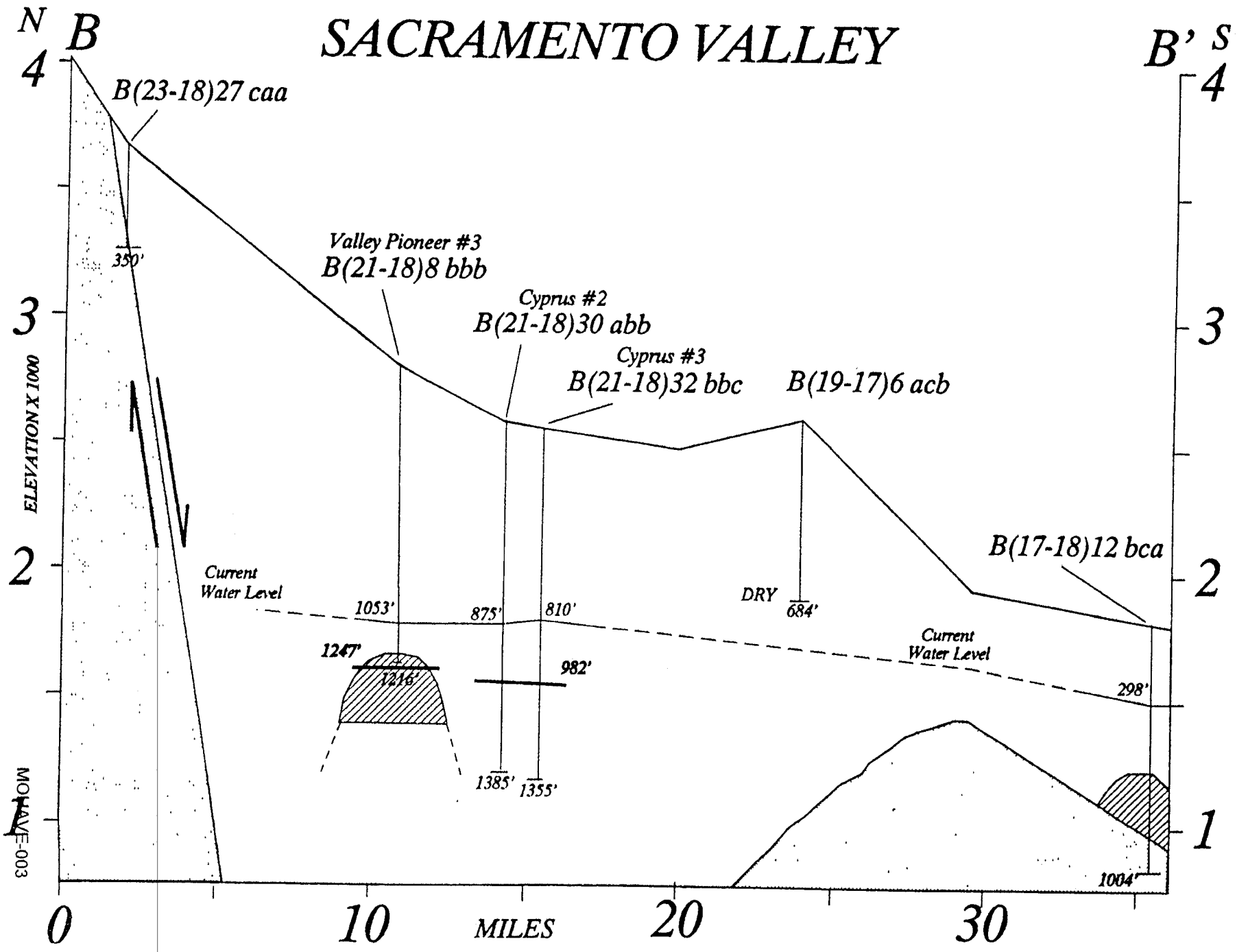
N
B
SACRAMENTO VALLEY
B'
S
4
3
2
1
ELEVATION X 1000
MOHAVE-003
B(23-18)27 caa
350'
Valley Pioneer #3
B(21-18)8 bbb
Cyprus #2
B(21-18)30 abb
Cyprus #3
B(21-18)32 bbc
B(19-17)6 acb
B(17-18)12 bca
Current
Water Level
1053'
875'
810'
DRY
684'
Current
Water Level
298'
1247'
1216'
982'
1385'
1355'
1004'
0
10
MILES
20
30

SPECIFICATIONS AND CONTRACT DOCUMENTS

FOR THE

CONSTRUCTION AND TESTING

OF

ONE (1) OR MORE WATER WELLS

GRIFFITH ENERGY, L.L.C.

MANERA, INC.
8316 NORTH 53RD STREET
PARADISE VALLEY, AZ 85253
Telephone (602) 948-9818
Fax (602) 596-8776

October 1, 1998

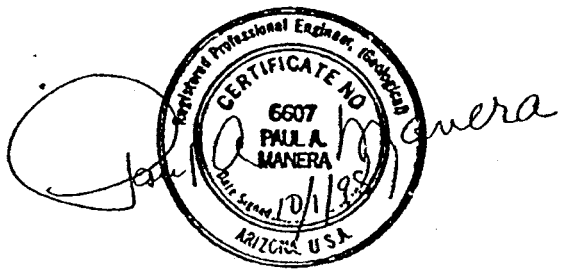

MOHAVE-003

TABLE OF CONTENTS

PART I . . BIDDING PROCESS

ADVERTISEMENT FOR BIDS 1-1

1.1 Parties to Contract 1-2

1.2 Preparation of Bids 1-3

1.3 Acknowledgement of Addenda 1-3

1.4 Submission of Bids 1-3

1.5 Allegations of Mistakes in Bids 1-4

1.6 Award of Contract 1-4

1.7 Notice to Proceed 1-4

1.8 Return of Bid Bond 1-4

PART II . . BID SUBMITTAL DOCUMENTS

Affidavit of Understanding 2-1

Proposal 2-2

Bid Schedule 2-5

PART III . . CONTRACT DOCUMENTS

Contract Agreement 3-1

Qualified Supervisor 3-4

Notice of Award 3-5

Notice to Proceed with Authorized Work 3-6

Change Order 3-7

Non - Compliance Notification 3-8

PART IV . . GENERAL CONDITIONS

4.1 Definitions 4-1

4.2 Additional Instructions and Detail Drawings 4-4

4.3 Schedules, Reports and Records 4-4

4.4 Drawings and Specifications 4-5

4.5 Shop Drawings 4-5

4.6 Materials, Services and Facilities 4-6

4.7 Inspection and Testing 4-6

4.8 Substitutions 4-7

4.9 Patents 4-8

4.10 Surveys, Permits and Regulations 4-8

4.11 Protection of Work, Property and Persons 4-8

4.12 Supervision by Contractor 4-9

4.13 Changes in Work 4-10

4.14 Changes in Contract Price 4.10

4.15 Time for Completion and Liquidated Damages 4.10

4.16 Correction of Work 4-11

4.17 Subsurface Conditions 4-11

4.18 Suspension of Work, Termination and Delay 4-12

4.19 Payments to Contractor 4.13

4.20 Acceptance of Final Payment as Release 4-14

4.21 Insurance 4-14

4.22 Contract Security 4-16

4.23 Assignments 4-16

4.24 Indemnification 4-16

4.25 Separate Contracts 4-17

4.26 Subcontracting 4-17

4.27 Geologist-Engineer's Authority 4-18

4.28 Land and Rights of Way 4-18

4.29 Guaranty 4-19

4.30 Arbitration 4-19

4.31 Taxes 4-19

PART V . . SUPPLEMENTAL GENERAL CONDITIONS

5.1 Scope of Work 5-1

5.2 Eligibility of Contractor 5-2

5.3 Proposal 5-2

5.4 Examination of Site and Specifications and Contract Documents 5-3

5.5 Execution of the Contract 5-3

5.6 Bid Bond 5-3

5.7 Performance and Payment Bonds 5-3

5.8 In Lieu of Bonding 5-4

5.9 Permits, Certificates, Laws and Ordinances 5-4

5.10 Competent Workmen 5-4

5.11 Alcohol and Drug Testing 5-4

5.12 Environmental Issues 5-5

5.13 Operating Time 5-5

5.14 Payment 5-5

5.15 Provisions Regarding Safety, Health and Sanitation 5-6

5.16 Final Cleanup and Grading 5-6

5.17 Change Orders and Extras 5-7

5.18 Records and Samples 5-7

5.19 Lost Circulation 5-8

5.20 Inability to Complete Well 5-8

5.21 Bedrock 5-9

5.22 Abandonment 5-10

PART VI . . SPECIAL CONDITIONS

6.1 Pre-Bid Conference 6-1

6.2 Equipment 6-1

6.3 Dust Control 6-2

6.4 Submittals 6-2

6.5 Time for Completion, Liquidated Damages and Forfeiture of Contract 6-2

6.6 Liquidated Damages for Non-Compliance with the Contract Documents 6-3

6.7 Liquidated Damages for Misuse of Geologist-Engineer 6-3

6.8 On Site Materials 6-4

PART VII . . TECHNICAL SPECIFICATIONS, DRILLING

7.1 Project Location 7-1

7.2 Method of Construction 7-1

7.3 Cleaning Well Rig 7-1

7.4 Ingress and Egress 7-1

7.5 Drilling Water 7-1

7.6 Mud Pits, Layout and Waste Control 7-2

7.7 Conductor Casing 7-2

7.8 Well Bore Diameter and Depth 7-2

7.9 Drilling Fluid 7-2

7.10 Downhole Logging Suite 7-3

7.11 Casing String and Diameter 7-3

7.12 Gravel Pack and Cement Seal 7-5

7.13 Development 7-6

7.14 Drilling Fluid Dispersion 7-7

7.15 Plumbness and Alignment 7-7

7.16 Downhole Television Scan 7-7

7.17 Reinforced Concrete Pump Foundation 7-7

7.18 Formation Water Testing 7.8

PART VIII . . TECHNICAL SPECIFICATIONS, PUMP TESTING

8.1 Equipment 8-1

8.2 Pump Setting 8-1

8.3 Procedure 8-1

8.4 Changes in Procedure 8-3

8.5 Waste Water 8-4

8.6 Records 8-4

PART IX . . FIGURES 1 - 4

PART X . . WELL SCHEDULES AND LOGS

PART I INFORMATION FOR BIDDERS AND THE BIDDING PROCESS

ADVERTISEMENT FOR BIDS

Griffith Energy, L.L.C.

Manera, Inc. (Geologist-Engineer)

Griffith Energy, L.L.C. proposes to construct a series of wells to withdraw water from the Sacramento Valley ground water aquifer. As the data in the specific area of the proposed well field is limited, it is proposed to drill the initial well as a test well. The pilot bore will be deeper than the expected completed well to determine the materials present in the aquifer, Formation water samples may be taken and other data collected during the drilling program. Following the completion of the initial well, additional production wells may drilled immediately or delayed for a period. The contract for the construction of the well(s) will be valid for one (1) year, thus, there may be one (1) continuous period of drilling of several wells, or there may be one (1) well drilled immediately, with the remaining wells drilled later. It is understood that in the case of the latter, more than one mobilization charge will occur.

Sealed bids for the drilling, construction, development and pump testing for one (1) or more industrial water supply wells will be received by Manera, Inc., 8316 North 53rd Street, Paradise Valley, Arizona 85253 until 1500 hours local time October 26, 1998. The bids will be privately opened. The results of bidding will be tabulated and faxed to all bidders.

The project is located ten (10) plus or minus miles southwest of Kingman, Mohave County, Arizona.

There is a mandatory pre-bid conference at 1100 hours, October 12, 1998. All proposed bidders are to be present at the offices of Mohave County Economic Development Authority, Inc., 3160 Shangri La Drive, Kingman, AZ 86401, at that time for a review of the Specifications and Contract Documents. Following the review of the bidding package, a tour of the drilling sites will be taken to allow the Bidders to see the sites, the work required to prepare the site and to review the area and method of wasting the discharge water from the drilling program and the test pumping. It is expected that it will require four (4) to six (6) hours to review the bidding package and tour the well sites.

Copies of the Specifications and Contract Documents may be obtained from the offices of Manera, Inc. 8316 North 53rd Street, Paradise Valley, AZ 85253, Telephone (602) 948-9818, Fax (602) 596-8776.

Griffith Energy, L. L. C. reserves the right to reject any or all bids for any reason, and to waive any informality in the bidding process in order to obtain the bid deemed most favorable to the Owner.

Advertising period: September 28, 1998 to October 19, 1998

1.1 PARTIES TO THE CONTRACT

1.1.1 Owner

Griffith Energy, L.L.C.
11350 Random Hills Road, Suite 400
Fairfax, Virginia 22030

Attention: Dana L. Diller

Telephone: (703) 293-2627
Fax (703) 293-2659

1.1.2 Project Officer

Mayes Construction Company
P. O. Box 1833
San Juan Capistrano, CA 92693

Attention: T. E. Mayes

Telephone: (714) 489-0849
Fax (714) 489-9161

1.1.3 Geologist-Engineer

Manera, Inc.
8316 North 53rd Street
Paradise Valley, AZ 85253-2512

Attention: Paul A. Manera, P.E.

Telephone: (602) 948-9818
Fax (602) 596-8776

1.1.4 Contractor

Successful Bidder

_____

_____

_____

Attention: _____

Telephone: _____

Fax _____

1.2 PREPARATION OF BIDS

1.2.1. Bids shall be submitted on the forms furnished and shall be manually signed. The entire bound set of the Contract Documents and Specifications, plus all addenda and any other documents pertaining to the bid shall be returned as part of the bid. Any erasures and/or changes in the bid figures must be initialed by the person signing the bid.

1.2.2. The bidder shall bid on all items. If there is no charge for an item, the bid should read zero (0) or N/A (not applicable). Failure to fill in all items on the bid form will be considered a no bid and the bid will be disqualified.

1.2.3. Alternate bids will not be considered.

1.3 ACKNOWLEDGEMENT OF ADDENDA

1.3.1 Bidders shall acknowledge receipt of any addenda to this set of Contract Documents and Specifications by including these addenda with this bid package and identifying the number and date of each Addendum:

Addendum Number	Date Received
_____	_____
_____	_____
_____	_____
_____	_____

1.4 SUBMISSION OF BIDS

1.4.1 Completed sealed Bids (two (2) original copies) must be received by:

Manera, Inc.
8316 North 53rd Street
Paradise Valley, AZ 85253

on or before 1500 hours, October 26, 1998

1.4.2 Each sealed envelope containing a Bid should be plainly marked on the outside as containing a Bid identifying the project name.

1.4.3 Any Bid package not received prior to the bid submittal closing time, for any reason, will be disqualified.

1.5 ALLEGATIONS OF MISTAKES IN BIDS

1.5.1 A Bid will be considered as stated. Any mistake contained in a bid shall be binding on its proponent.

1.6 AWARD OF CONTRACT

1.6.1 The Contract will be awarded within thirty (30) calendar days of the Bid Closing.

1.6.2 The party to whom the Contract is awarded, the "Contractor", shall complete the Contract, bonding, insurance and other requirements of the Contract Documents and submit the executed Contract Documents to Manera, Inc. within ten (10) calendar days from the date of the Award of Contract.

1.6.3 The Owner reserves the right to reject any or all bids and to waive any informality in the bid process to obtain the bid deemed most favorable to the Owner.

1.7 NOTICE TO PROCEED

1.7.1 A Notice to Proceed will be issued to the Contractor within ten (10) calendar days following completion of the requirements of paragraph 1.6.2 above satisfactory to the Owner.

1.8 RETURN OF BID BOND

1.8.1 All Bid Bonds except those of the three finalist Bidders will be returned at the Bid Closing. The remaining three Bid Bonds will be retained until the contract documents are signed with a successful Bidder, at which time the remaining Bid Bonds will be returned.

PART II BID SUBMITTAL DOCUMENTS

AFFIDAVIT OF UNDERSTANDING

The Undersigned certifies that he is the Contractor or an authorized agent of the Contractor and further certifies that:

1. he has thoroughly read, carefully examined and fully understands the Specifications and Contract Documents authorized by the Owner;

2. he thoroughly understands the scope of work to be completed;

3. he has personally inspected the site of work, the ingress and egress to the site, the water source and other field characteristics; and

4. he has thoroughly informed himself of the geologic and hydrologic characteristics of the area and has not relied solely on the geologic and hydrologic data given in the Specifications and Contract Documents.

By: _____

Contractor: _____

Title: _____

Date: _____

CORPORATE SEAL OR NOTARY PUBLIC:

PROPOSAL

Gentlemen:

The following Proposal is submitted for the drilling, constructing and testing of one (1) or more industrial water well(s) near Kingman, Mohave County, Arizona.

The following Proposal is made on behalf of _____ and no others. Evidence of authority to submit the Proposal is herewith furnished. The Proposal is in all respects fair and is made without collusion on the part of any person, firm, or corporation mentioned above, and no family member or employee of the Owner is personally or financially interested, directly or indirectly, in the Proposal, or in any purchase or sale of any materials or supplies for the work in which it relates, or in any portion of the profits thereof.

The Undersigned declares that the amount and nature of the work to be done is understood and that at no time will misunderstanding of the Specifications and Contract Documents or conditions to be overcome, be pleaded. On the basis of the Specifications and Contract Documents proposed for use, the Undersigned proposes to furnish all the necessary machinery, equipment, tools, apparatus, and other means of construction, to do all the work and to furnish within the time hereinafter proposed, and to accept, as full compensation therefor, the sum of various products obtained by multiplying each unit price, herein bid for the work or materials, by the quantity thereof actually incorporated in the complete project, as determined by the Geologist-Engineer.

The Undersigned understands that the quantities mentioned herein are approximate only and are subject to increase or decrease and hereby proposes to perform all quantities of work, as either increased or decreased, in accordance with the provisions of the Specifications and Contract Documents, at the unit price bid in the Bidding Schedule.

The Undersigned further proposes to perform all extra work that may be required on the basis provided in the Specifications and Contract Documents and to give such work personal attention and to secure economical performance.

The Undersigned further proposes to execute the Contract Agreement within ten (10) days from the date of award, time being of the essence. The Undersigned further proposes to begin work as specified in the Contract Documents attached hereto.

Contractor's Arizona License Number _____

Contractor's Arizona Department of Water Resources License Number _____

Proposed Time to Start Drilling Well _____

Proposed time for Completion of Drilling and Testing Program

_____

Date:_____, 19____.

If by a Corporation: Corporate Name _____

By: _____
Authorized Representative

Print: _____

Its: _____
Title

Address: _____

_____

Telephone: _____

The name of the State under which the laws of which the Corporation was chartered and names, titles and business addresses of the President, Secretary and Treasurer must be shown.

President: _____ Corporate Seal:

Address: _____

_____

Secretary: _____

Address: _____

_____

Treasurer: _____

Address: _____

_____

State of Incorporation: _____ If not an Arizona Corporation, proof of qualification to do business in the State of Arizona must be attached.

Date:_____, 19____.

If by an Individual:

By: _____

Print: _____

Address: _____

_____

Telephone: _____

If by a Firm or Partnership:

By: _____

Print: _____

Address: _____

_____

Telephone: _____

NOTARY PUBLIC:

GRIFFITH ENERGY L.L.C.

BID SCHEDULE

for

TEST WELL, B(19-18)10cdd

Item No.	Item	Unit Price	Total Price
1.	Mobilization and demobilization of drilling rig, including all tools and equipment, mileage, travel time and subsistence for crew, portal to portal, lump sum _____dollars _____cents		_____
2.	Move well to well, lump sum, _____dollars _____cents		_____
3.	Steam cleaning drilling rig and appurtenances, lump sum _____dollars _____cents		_____
4.	Construction of mud pits and layout, including all other costs for items not specifically stated in this Bid Schedule, lump sum _____dollars _____cents		_____
5.	Pumping and transporting water, lump sum _____dollars _____cents		_____

Item No.	Item	Unit Price	Total Price
6.	Drilling, furnishing, setting and cementing forty (40) feet of conductor casing, lump sum _____dollars _____cents		_____
7.	Drilling eighteen hundred (1,800) feet of seventeen and one half (17.5) inch diameter well bore, including drilling fluid, per lineal foot _____dollars _____cents	_____	_____
8.	Setting jetting tool, air lifting for water sample collection, removal of jetting tool, per hour _____dollars _____cents	_____	
9.	Reaming (opening) seventeen and one half (17.5) inch diameter hole to twenty eight (28) inch diameter bore, twelve hundred (1,200) feet, per lineal foot _____dollars _____cents	_____	_____
10.	Furnishing and installing seven hundred (700) feet of eighteen (18) inch diameter casing, including six (6) sets of spring steel centralizers, per lineal foot _____dollars _____cents	_____	_____

Item No.	Item	Unit Price	Total Price
11.	Furnishing and installing five hundred and (500) feet of eighteen (18) inch diameter wire wrapped well screen, per lineal foot _____ dollars _____ cents	_____	_____
12.	Furnishing and installing six hundred and twenty feet of four (4) inch ID gravel feed tube, per lineal foot _____ dollars _____ cents	_____	_____
13.	Furnishing and setting one (1) set landing clamps, lump sum _____ dollars _____ cents		_____
14. a.	Furnishing and installing by means of a Tremie pipe approximately fifty eight (58) cubic yards of gravel,		
14. b.	Furnishing and installing by pouring approximately fifty (58) cubic yards of gavel, Contractor's Selection a. b. per cubic yard [circle only one (1) choice] _____ dollars _____ cents	_____	_____
15.	Furnishing and installing approximately fifty seven (57) cubic yards of cement slurry seal, per cubic yard _____ dollars _____ cents	_____	_____

Item No.	Item	Unit Price	Total Price
16.	Furnishing and installing approximately fifty (50) gallons of commercial sodium hypochlorite solution, lump sum _____dollars _____cents		_____
17.	Jetting, twelve (12) hours, per hour _____dollars _____cents	_____	_____
18.	Furnishing downhole logging suite, lump sum _____dollars _____cents		_____
19.	Furnishing downhole television scan, lump sum _____dollars _____cents		_____
20.	Construction of reinforced concrete pump foundation, lump sum _____dollars _____cents		_____
21.	Furnishing, installing and removing test pump, lump sum _____dollars _____cents		_____
22.	Pump run time, per hour (120 hours) _____dollars _____cents	_____	_____

Item No.	Item	Unit Price	Total Price
23.	Standby time, per hour _____dollars _____cents		_____
24.	Rig operating time for lost circulation or water sample collecting and jetting, per hour _____dollars _____cents	_____	
25.	Bedrock drilling, per hour _____dollars _____cents	_____	
26.	Road grading, per lineal foot _____dollars _____cents	_____	

PART III CONTRACT DOCUMENTS

CONTRACT AGREEMENT

THIS AGREEMENT, made and entered into this_____day of_____, 1998, by and between Griffith Energy, L.L.C., hereinafter called the Owner, and _____

_____, hereinafter called the Contractor.

WITNESSETH: That the said Contractor, for and in consideration of the sum to be paid him by the Owner in the manner and at the times hereinafter provided, and of the other covenants and agreements herein contained, hereby agrees for himself, heirs, administrators, successors, and assigns as follows:

ARTICLE I - SCOPE OF WORK: The Contractor shall construct and complete all the work required by the Specifications and Contract Documents for the completion of one (1) or more industrial water well(s) (the "Wells") and furnish at his own cost and expense all necessary machinery, equipment, tools, apparatus, materials and labor (collectively the "Work") necessary for the completion of the Wells according to the Specifications and Contract Documents attached hereto.

ARTICLE II - WARRANTY: In addition to any applicable warranties by Vendors, the Contractor warrants to the Owner that all materials and equipment furnished under this Contract will be new unless otherwise specified, and that all work will be of good workmanlike quality, free from faults and defects and in conformance with the Specifications and Contract Documents. Any of the Work not conforming to these standards may be considered defective. Contractor guarantees against any and all such defects in materials and workmanship for a period of one (1) year after the date of acceptance set forth in the Certificate of Completion and Acceptance. Contractor shall immediately, after written notice thereof, repair to the satisfaction of Owner any such defects in material and workmanship which may develop during such guarantee period, and any damage to other work or property caused by such defects or the repairing of same, all at the Contractor's expense. The Owner may proceed directly against the Contractor notwithstanding any applicable warranties by Vendors; and the Contractor shall expressly assign in writing any and all rights under any warranties that the Contractor may have received or be entitled to from Vendors of the materials and equipment incorporated in the Work, to the extent such warranties extend beyond the period of Contractor's guarantee hereunder.

ARTICLE III - TIME OF COMPLETION: The Contractor further covenants and agrees that all the Work materials shall be furnished and delivered and all the Work labor shall be done and performed in every respect according to the Specifications and Contract Documents and that the Well shall be turned over to the Owner complete and ready for use on or before the time specified (the "Deadline"). The Work and the Wells shall be free and discharged of all claims and demands whatsoever for, or on account of any and all labor and materials used, or furnished to be used, in any way related to the Work or the Wells.

It is expressly understood and agreed that, in case of failure on the part of the Contractor, for any reason, except with the written consent of the Owner, to complete the Wells according to the Specifications and Contract Documents, before the Deadline, the Owner shall deduct from any money due, or which may become due the Contractor, or, if no money shall be due, the Owner shall have the right to recover from the Contractor an amount equal to the actual cost of maintaining Owner's engineering, inspection, and other necessary forces and equipment, for the time elapsing between the Deadline and the actual date of completion of the Wells in accordance with the terms of the Contract Documents, together with any other costs, fees, expenses or damages suffered by the Owner due to Contractor not completing the Wells within the time limit set forth herein; provided, however, that

upon receipt of written notice from the Contractor, of the existence of causes, as herein provided, over which said Contractor has no control and which must delay the completion of the Work or any delay occasioned by the Owner, the Owner may extend Deadline in accordance with the Specifications and Contract Documents and, in such case, the Contractor shall become liable for the above specified liquidated damages for delays commencing from the date said extension period shall expire.

After the Deadline plus any extension granted, pursuant to the immediately proceeding paragraph, no further payments shall be made the Contractor until all Work is completed and the Wells are accepted by the Owner in writing.

It is also agreed that the actual date of completion for all purposes of this Contract Agreement shall be that date upon which the Wells are accepted in writing by the Owner.

ARTICLE IV - CLAIMS FOR EXTRA WORK: It is expressly understood and agreed that no claim for extra work or materials, not specifically herein provided, done, or furnished by the Contractor, will be allowed by the Owner, nor shall the Contractor do any work or furnish any materials not covered by these Specifications and Contract Documents, unless such work is ordered in writing by the Owner. In no event shall the Owner incur any liability by reason of any verbal direction or instruction that the Contractor may be given by the Owner or his authorized representatives or others. It is the intent and meaning of this Article that all orders, directions, and instructions not contained in the Specifications and Contract Documents pertaining to the Wells and Work shall be in writing from the Owner or Owner's authorized representatives, and the Contractor hereby waives any claims for compensation for work done or materials furnished not in accordance therewith, regardless of benefit accruing to the Owner, if any, by virtue of such work or material.

ARTICLE V - MISUNDERSTANDING OR DECEPTION: The Contractor agrees that he has investigated the site of the Work and all conditions thereof and parts and appurtenances thereto and hereby waives any right to plead misunderstanding or deception as to location, site conditions, character of work or materials, estimates of quantities, or other conditions surrounding or being a part of the Work and understands that the quantities given in the Bidding Schedule are approximate only, and hereby agrees to accept the quantities as actually placed and finally determined upon the completion of the Work, in accordance with the Specifications and Contract Documents.

ARTICLE VI - PAYMENTS: For and in consideration of the faithful performance of the Work as set forth in the Specifications and Contract Documents and duly issued Addenda, the Owner agrees to pay the Contractor the amount earned, computed from the actual quantities of Work performed and materials furnished and the unit prices named in the attached Bidding Schedule. The Owner agrees to make such payments in the manner and at the times provided in the Specifications and Contract Documents hereto appended.

ARTICLE VII - SPECIFICATIONS AND CONTRACT DOCUMENTS: The Specifications and Contract Documents shall consist of the following, which are hereby incorporated in this Contract Agreement with the same force and effect as if fully set forth herein:

Request for Bids
Section 1, Information for Bidders
Section 2, Bid Documents, including the Bid Schedule, Proposal and Affidavit of Knowledge
Section 3, Contract Documents, including the Contract Agreement
Section 4, General Conditions
Section 5, Supplemental General Conditions
Section 6, Technical Specifications, Drilling

Section 7, Technical Specifications, Pump Development and Testing
Figure 1, Well Design Diagram
Figure 2, Well Alignment Specifications
Figure 3, Pump Pad Diagram
Addenda:

Addendum_____dated_____

Addendum_____dated_____

Addendum_____dated_____

Addendum_____dated_____

All future duly issued addenda and change orders shall be made a part of this Contract and shall have the same force and effect as though all the same were fully inserted herein.

WITNESS OUR HANDS AND SEALS this_____day of_____, 19____.

Owner: GRIFFITH ENERGY, L.L.C.

By: _____

Title: _____
Owner

_____
Notary Public

My Commission Expires:_____

Contractor: _____

By: _____

Title: _____
Contractor

_____
Notary Public

My Commission Expires:_____

QUALIFIED SUPERVISOR

The Contractor hereby appoints

_____

Telephone Number: _____

Cellular Telephone Number: _____

Pager Number: _____

as the Qualified Field Supervisor as defined in Item 4.12 of the Specifications and Contract Documents.

CONTRACTOR: _____

By: _____

Title: _____

Dated this _____ day of _____, 199__.

NOTICE OF AWARD OF CONTRACT

To: _____

_____

_____

Description: Drilling, Construction and Testing one (1) or more industrial water wells near Kingman, Mohave, Arizona.

The Owner has considered the Bid submitted by you for the above described Work.

You are hereby notified that your Bid has been accepted for the Work defined in the Specifications and Contract Documents for the project.

You are required by the Information for Bidders, Section 1 of the Specifications and Contract Documents, to execute the Contract Agreement and furnish the required Performance and Payment Bonds and the Certificates of Insurance within ten (10) calendar days from the date of this Notice of Award.

If you fail to execute the Contract Agreement and to furnish the Bonds and Certificates of Insurance within ten (10) days from the below specified date of this Notice, the Owner will be entitled to consider all your rights arising out of the Owners acceptance of your Bid as abandoned and as a forfeiture of your Bid Bond. The Owner will be entitled to such other rights as may be available under applicable law.

You are required to return an acknowledged copy of this Notice of Award to the Owner.

Dated this _____ day of _____, 199__.

GRIFFITH ENERGY, L.L.C.

By: _____

Title: _____

ACCEPTANCE OF NOTICE OF AWARD: Receipt of the above Notice of Award of Contract is hereby acknowledged this _____ day of _____, 199__.

CONTRACTOR: _____

By: _____

Title: _____

NOTICE TO PROCEED WITH AUTHORIZED WORK

To: _____

_____

_____

Description: Drilling, Construction and Testing of the well as specified herein, located in the

SE¼, SE¼, SW¼ of Section 10, T. 19 N., R. 18 W., G&SR B&M, near Kingman, Mohave County, Arizona.

You (the Contractor) are hereby notified to commence the Work in accordance with the Specifications and Contract Documents dated October 1, 1998, and you, the Contractor thereunder shall complete the Work within forty five (45) calendar days per Well from the date of this Notice, as defined in the Specifications and Contract Documents, Item 6.5. The Deadline for the completion of all Work is,

therefore, _____, 199___.

In the case of failure by the Contractor to initiate mobilization within ten (10) days of this Notice to Proceed, the Owner may, at its option, consider the Contractor in default and pursue any and all remedies available under applicable law and/or equity, including without limitation specific performance.

Dated this _____ day of _____, 199__.

GRIFFITH, L. L. C.

By: _____

Title: _____

ACCEPTANCE OF NOTICE OF PROCEED: Receipt of the above Notice to Proceed is hereby

acknowledged this _____ day of _____, 199__.

CONTRACTOR: _____

By: _____

Title: _____

GRIFFITH ENERGY L.L.C.

CHANGE ORDER

Date: _____, 199___

ItemNumber_____

Description _____

ChangeFrom_____

_____

_____

_____

_____

_____

ChangeTo_____

_____

_____

_____

_____

_____

_____

Change in Price $ _____

Authorized by _____
Griffith Energy L.L.C.

Title _____

Accepted by _____
Contractor

Title _____

GRIFFITH ENERGY L.L.C.

NON-COMPLIANCE NOTIFICATION

Date _____, 199____

Time _____

SpecificationItemNumber_____

Specification Description _____

Non - Compliance _____

_____

_____

_____

_____

_____

_____

_____

_____

_____

Field Inspector _____
Authorized Representative

Title _____

Accepted by _____
Contractor

Title _____

MOHAVE-003

PART IV GENERAL CONDITIONS

PART IV GENERAL CONDITIONS

4.1 DEFINITIONS

Wherever used in the Contract Documents, the following terms shall have the meanings indicated which shall be applicable to both the singular and plural thereof:

4.1.1 ADDENDA - Written or graphic instruments issued prior to the execution of the Contract Agreement which modify or interpret the Contract Documents, Drawings and Specifications, by additions, deletions, clarifications or corrections. All addenda become part of the Specifications and Contract Documents when such documents are executed by both the Owner and the Geologist-Engineer.

4.1.2 BID - The offer or proposal of the Bidder submitted on the prescribed form included in these Specifications and Contract Documents setting forth the prices for the work to be performed.

4.1.3 BID CLOSING - The time and date set for the receipt of the bids.

4.1.4 BIDDER - Any person, firm or corporation submitting a Bid for the Work.

4.1.5 BONDS - Bid, Performance, and Payment Bonds and/or other instruments of security, furnished by the Contractor and his surety in accordance with the Specifications and the Contract Documents.

4.1.6 CHANGE ORDER - A written order from the Geologist-Engineer to the Contractor authorizing an addition, deletion or revision in the work within the general scope of the Contract Documents, or authorizing an adjustment in the Contract Price or Contract Time. All change orders become part of the Specifications and Contract Documents when such documents are executed by the Owner and/or the Geologist-Engineer.

4.1.7 CONTRACT DOCUMENTS - All documents, including Advertisement For Bids, Agreement, Bid, Bid Bond, Drawings, Information For Bidders, Notice of Award, Notice to Proceed, Performance Bond, Payment Bond, Bid Submittal Documents, General Conditions, Supplemental General Conditions, Special Conditions, Technical Specifications, Forms, Appendices and all other information and materials when such items are included in the Specifications and Contract Documents booklet. In addition, all Addenda, Change Orders and Shop Drawings issued become part of the Contract Documents as though they were included in the Contract Documents booklet.

4.1.8 CONTRACT PRICE - The total monies payable to the Contractor under the terms and conditions of the Contract Documents.

4.1.9 CONTRACT TIME - The total number of calendar days stated in the Contract Documents for the completion of the Work prior to the Deadline.

4.1.10 CONTRACTOR - The person, firm or corporation with whom the Owner has executed the Contract Agreement designated in Item 1.1.4

4.1.11 DRAWINGS - The part of the Contract Documents issued in graphic form which show the characteristics and scope of the Work to be performed and which have been prepared and/or approved by the Geologist-Engineer.

4.1.12 GEOLOGIST-ENGINEER - This term when used in these documents refers to:

Manera, Inc.
8316 North 53rd Street
Paradise Valley, Arizona 85253-2512
Telephone (602) 948-9818
Fax (602) 596-8776
Pager (602) 683-8446

All communications by the Contractor regarding this Project shall be initiated between the Contractor and the Geologist-Engineer.

4.1.13 FIELD ORDER - A written order effecting a change in the Work not involving an adjustment in the Contract Price or an extension of the Contract Time, issued by the Geologist-Engineer to the Contractor during construction. The Field Order may be written in the Contractor's Daily Work Log or issued on a Field Order form.

4.1.14 NOTICE OF AWARD - The written notice of the acceptance of the Bid from the Owner to the successful Bidder, in the form provided at page 3-5.

4.1.15 NOTICE TO PROCEED - Written communication issued by the Owner to the Contractor authorizing him to proceed with the Work for the specific well stated therein and establishing the date of commencement of the Work. A separate notice will be issued for each well.

4.1.16 OWNER - This term refers to the entity designated in Item 1.1.1. The Geologist-Engineer is hereby designated the agent of the Owner for the purpose of issuing the various notices designated in these Contract Documents.

4.1.17 PROJECT - The entire undertaking to be performed by the Contractor as provided in the Contract Documents.

4.1.18 PROJECT OFFICER and RESIDENT PROJECT REPRESENTATIVE - refers to the authorized representative of the Owner designated in Item 1.1.2.

4.1.19 SHOP DRAWINGS (SUBMITTALS) - All drawings, diagrams, illustrations, brochures, schedules and other data which are prepared by the Contractor, a Subcontractor, Manufacturer, Supplier, or Distributor, which illustrate how specific portions of the Work shall be fabricated or installed. All shop drawings accepted by the Geologist-Engineer shall become part of the Contract Documents.

4.1.20 SPECIFICATIONS - Specifications - That part of the Contract Documents consisting of written descriptions of a technical nature of materials, equipment, construction systems, standards and workmanship to be included in the Work.

4.1.21 SUBSTANTIAL COMPLETION - Acceptance of the well by the Owner.

4.1.22 STANDBY TIME

4.1.22.1 All downtime requested by the Geologist-Engineer for:

4.1.22.1.1 the benefit of the Owner;

4.1.22.1.2 the purpose of resolution of technical problems arising from errors and omissions in the specifications, and;

4.1.22.1.3 unforeseen conditions in the Work environment excepting conditions arising from acts of "God", i.e. flood, fire, inclement weather, etc.

4.1.22.2 Standby time is in effect only when the Contractor's entire crew and all equipment is:

4.1.22.2.1 onsite;

4.1.22.2.2 available for Work, and;

4.1.22.2.3 on payroll and per diem.

4.1.22.3 Maintenance and repair of equipment may be completed during this downtime period.

4.1.22.4 The following conditions do not constitute standby time:

4.1.22.4.1 downtime instituted by the Contractor;

4.1.22.4.2 downtime waiting for materials, tools, special equipment or personnel previously specified or requested;

4.1.22.4.3 downtime waiting for specialty tools to rectify problems created by the Contractor, i.e. fishing tools, etc.;

4.1.22.4.4 downtime waiting for new materials, tools, personnel, etc. required by rejection of unacceptable materials, tools, personnel, etc.;

4.1.22.4.5 downtime when the full crew is not onsite and/or not on payroll and per diem;

4.1.22.4.6 downtime due to maintenance and repair including maintenance and repair in progress upon the termination of Owner instigated downtime.

4.1.22.5 Standby time originates and terminates by written order of the Geologist-Engineer in the "Daily Log Book".

4.1.23 SUBCONTRACTOR - An individual, firm or corporation having a direct contract with the Contractor or with any other Subcontractor for the performance of a part of the Work at the site. Each Subcontractor shall be considered a subdivision of the Contractor and subject to all the conditions of this contract.

4.1.24 SUBSTANTIAL COMPLETION - That date as certified by the Geologist-Engineer when the construction of the Project or a specified part thereof is sufficiently completed, in accordance with the Contract Documents, so that the Project or specified part can be utilized for the purposes for which it is intended.

4.1.25 SUPPLEMENTAL GENERAL CONDITIONS - Modifications or additions to the General Conditions for inclusion in the Contract Documents, or such requirements that may be applicable state laws.

4.1.26 SUPPLIER - Any person or organization who supplies materials or equipment for the Work, including that fabricated to a special design, but who does not perform labor at the site.

4.1.27 WORK - All labor necessary to produce the construction required by the Contract Documents, and all materials and equipment incorporated or to be incorporated in the Project.

4.1.28 WRITTEN NOTICE - Any notice to any party of the Contract Documents relative to any part of the Contract Documents shall be in writing and considered delivered and the service thereof completed, when posted by certified or registered mail to the said party at his last given address, or delivered in person to said party or his authorized representative designated pursuant to the Contract Documents. on the Work.

4.2 ADDITIONAL INSTRUCTIONS AND DETAIL DRAWINGS

4.2.1 The Contractor may be furnished additional instructions and detail drawings by the Geologist-Engineer, as necessary to carry out the Work required by the Contract Documents.

4.2.2 The additional drawings and instruction thus supplied will become a part of the Specifications and Contract Documents. The Contractor shall carry out the Work in accordance with the additional detail drawings and instructions.

4.3 SCHEDULES, REPORTS AND RECORDS

4.3.1 The Contractor shall submit to the Owner such schedule of quantities and costs, progress schedules, certified payrolls, reports, estimates, records and other data where applicable as are required by the Contract Documents for the Work to be performed.

4.3.2 After the Notice to Proceed and prior to the start of Work on the Project, the Contractor shall submit construction progress schedules showing the order in which he proposes to carry on the Work, including dates at which he will start the various parts of the Work, estimated date of completion of each part and, as applicable:

4.3.2.1 The dates at which special detail drawings will be required, and;

4.3.2.2 Respective dates for submission of Shop Drawings, the beginning of manufacture, the testing and the installation of materials, supplies and equipment.

4.3.3 The Contractor shall also submit a schedule of payments that he anticipates he will earn during the course of the Work.

4.3.4 Progress meetings shall be held to discuss the Work completed, the Work in progress and the projected Work until the next progress meeting. Written reports shall present the data discussed. The Contractor, the Project Officer (Owner), and the Geologist-Engineer or a representative of each shall be at each meeting.

4.4 DRAWINGS AND SPECIFICATIONS

4.4.1 The intent of the Drawings and Specifications is that the Contractor shall furnish all labor, materials, tools, equipment, and transportation necessary for the proper execution of the Work in accordance with the Contract Documents and all incidental Work necessary to complete the Project in an acceptable manner, ready for use and operation by the Owner.

4.4.2 In case of conflict between the Drawings and Specifications, the Specifications shall govern. Figure dimensions on Drawings shall govern over scale dimensions, and detailed drawings shall govern over general Drawings.

4.4.3 Any discrepancies found between the Drawings, the Specifications and/or the site conditions or any inconsistencies or ambiguities in the Drawings or Specifications shall be immediately reported to the Geologist-Engineer, in writing, who shall promptly correct such inconsistencies or ambiguities in writing. Work done by the Contractor after his discovery of such discrepancies, inconsistencies or ambiguities is subject to approval by the Geologist-Engineer and if performed prior to such approval is done at the Contractor's risk.

4.5 SHOP DRAWINGS

4.5.1 The Contractor shall provide Shop Drawings as may be necessary for the prosecution of the Work as required by the Contract Documents. The Geologist-Engineer shall promptly review all Shop Drawings. The Geologist-Engineer's approval of any Shop Drawing shall not release the Contractor from responsibility for deviations from the Contract Documents. The approval of any Shop Drawing which substantially deviates from the requirement of the Contract Documents shall be evidenced by a Change Order.

4.5.2 When submitted for the Geologist-Engineer's review, Shop Drawings shall bear the Contractor's certification that he has reviewed, checked and approved the Shop Drawings and that they are in conformance with the requirements of the Contract Documents.

4.5.3 Portions of the Work requiring a Shop Drawing or sample submission shall not begin until the Shop Drawing or submission has been approved by the Geologist-Engineer. A copy of each approved Shop Drawing and each approved sample shall be kept in good order by the Contractor at the site and shall be available to the Geologist-Engineer.

4.6 MATERIALS, SERVICES AND FACILITIES

4.6.1 It is understood that, except as otherwise specifically stated in the Contract Documents, the Contractor shall provide and pay for all materials, labor, tools, equipment, water, fuel, light, power, transportation, supervision, temporary construction of any nature, and all other services and facilities of any nature whatsoever necessary to execute, complete, and deliver the Work within the specified time (prior to the Deadline).

4.6.2 Materials and equipment shall be so stored as to insure the preservation of their quality and fitness for the Work. Stored materials and equipment to be incorporated in the Work shall be located so as to facilitate prompt inspection.

4.6.3 Manufactured articles, materials and equipment shall be applied, installed, connected, erected, used, cleaned and conditioned as directed by the manufacturer thereof.

4.6.4 Materials, supplies and equipment shall be in accordance with samples submitted by the Contractor and approved by the Geologist-Engineer and conform to the standards stated in the Contract Documents.

4.6.5 Materials, supplies or equipment to be incorporated into the Work shall not be purchased by the Contractor or the Subcontractor subject to a chattel mortgage or under a conditional sale contract or other agreement by which an interest is retained by the seller and shall be clear of all liens and encumbrances and appropriate lien waivers shall be provided by the Contractor.

4.7 INSPECTION AND TESTING

4.7.1 All materials and equipment used in the construction of the Project shall be subject to adequate inspection and testing in accordance with generally accepted standards, as required and defined in the Contract Documents.

4.7.2 The Owner shall provide all inspection and testing services not required by the Contract Documents.

4.7.3 The Contractor shall provide at his expense the testing and inspection services required by the Contract Documents.

4.7.4 If the Contract Documents, laws, ordinances, rules, regulations or orders of any public authority having jurisdiction require any Work to specifically be inspected, tested, or approved by someone other than the Geologist-Engineer, the Contractor will give the Geologist-Engineer timely notice of readiness for inspection so that the Geologist-Engineer may be present during the inspection. The Contractor will then furnish the Geologist-Engineer the required certificates of inspection, testing or approval.

4.7.5 Inspections, tests or approvals by the Geologist-Engineer or others shall not relieve the Contractor from his obligations to perform the Work in accordance with the requirements of the Contract Documents.

4.7.6 The Geologist-Engineer and his representatives will at all times have access to the Work. In addition, authorized representatives and agents of any participating or regulatory Federal or State agency shall be permitted to inspect all Work, materials, payrolls, record of personnel, invoices of materials, and other relevant data and records. The Contractor will provide proper facilities for such access and observation of the Work and also for any inspection, or testing thereof.

4.7.7 If any Work is covered prior to inspection as required by the Contract Documents and Specifications and/or contrary to the written instructions of the Geologist-Engineer, the Work must, if requested by the Geologist-Engineer, be uncovered for his observation and inspection and then recovered at the Contractor's expense.

4.7.8 If the Geologist-Engineer considers it necessary or advisable that covered Work be inspected or tested by others, the Contractor, at the Geologist-Engineer's request, will uncover, expose or otherwise make available for observation, inspection or testing as the Geologist-Engineer may require, that portion of the Work in question, furnishing all necessary labor, materials, tools, and equipment. If it is found that such Work is defective, the Contractor will bear all the expenses of such uncovering, exposure, observation, inspection and testing and of satisfactory reconstruction. If, however, such Work is not found to be defective, the Contractor will be allowed an increase in the Contract Price and/or an extension of the Contract Time, or both, directly attributable to such uncovering, exposure, observation, inspection, testing and reconstruction and an appropriate Change Order shall be issued.

4.8 SUBSTITUTIONS

4.8.1 Whenever a material, article or piece of equipment is identified on the Drawings or Specifications by reference to brand name or catalogue number, it shall be understood that this is referenced for the purpose of defining the performance or other salient requirements and that other products of equal capacities, quality and function shall be considered as provided hereinbelow. The Contractor may recommend the substitution of a material, article, or piece of equipment of equal substance and function for those referred to in the Contract Documents by reference to brand name or catalogue number, and if, in the opinion of the Geologist-Engineer, such material, article, or piece of equipment is of equal substance and function to that specified, the Geologist-Engineer may approve its substitution and use by the Contractor. Any cost differential shall be added or deducted from the Contract Price and the Contract Documents shall be appropriately modified by Change Order. The Contractor warrants that if substitutes are approved, no major changes in the function or general design of the Project will result. Incidental changes or extra component parts required to accommodate the substitute will be made by the Contractor without a change in the Contract Price or Contract Time.

4.9 PATENTS

4.9.1 The Contractor shall pay all applicable royalties and license fees. He shall defend all suits or claims for infringement of any patent rights and save the Owner and the Geologist-Engineer harmless from loss on account thereof, except that the Owner shall be responsible for any such loss when a particular process, design, or the product of a particular manufacturer or manufacturers is specified; however, if the Contractor has reason to believe that the design, process or product so specified would constitute an infringement of a patent, he shall be responsible for such loss unless he promptly gives such information to the Geologist-Engineer in advance of the use thereof.

4.10 SURVEYS, PERMITS AND REGULATIONS

4.10.1 The Owner shall furnish all boundary surveys and establish all base lines for locating the principal component parts of the Work together with a suitable number of bench marks adjacent to the Work as shown in the Contract Documents. From the information provided by the Owner, unless otherwise specified in the Contract Documents, the Contractor shall develop and make all detail surveys needed for construction such as slope stakes, batter boards, stakes for pile locations and other Working points, lines, elevations and cut sheets.

4.10.2 The Contractor shall carefully preserve bench marks, reference points and stakes and, in case of willful or careless destruction, he shall be charged with the resulting expense and shall be responsible for any mistakes that may be caused by their unnecessary loss or disturbance. The cost of replacing the survey points and rectifying mistakes caused by the loss of the survey points shall be deducted from monies owed the Contractor by the Owner.

4.10.3 Permits and licenses of a temporary nature necessary for the prosecution of the Work shall be secured and paid for by the Contractor unless otherwise stated in the Supplemental Conditions. Permits, licenses and easements for permanent structures or permanent changes in existing facilities shall be secured and paid for by the Owner, unless otherwise specified. The Contractor shall give all notices and comply with all laws, ordinances, rules and regulations bearing on the conduct of the Work as drawn and specified. If the Contractor observes that the Contract Documents are at variance therewith, he shall promptly notify the Geologist-Engineer in writing, and any necessary changes shall be adjusted as provided in Section 4.13, Changes In The Work.

4.10.4 The Contractor shall call for blue staking and shall be responsible for interference with or damage to underground facilities in the area of the Work site.

4.11 PROTECTION OF WORK, PROPERTY AND PERSONS

4.11.1 The Contractor will be responsible for initiating, maintaining and supervising all safety precautions and programs in connection with the Work. He will take all necessary precautions for the safety of, and will provide the necessary protection to prevent damage, injury or loss to all employees on the Work and other persons who

may be affected thereby, and all the Work and all materials or equipment to be incorporated therein, whether in storage on or off the site, and other property at the site or adjacent thereto, including trees, shrubs, lawns, walks, pavements, roadways, structures and utilities not designated for removal, relocation or replacement in the course of the Work.

4.11.2 The Contractor will comply with all applicable laws, ordinances, rules, regulations and orders of any public body having jurisdiction. He will erect and maintain, as required by the conditions and progress of the Work, all necessary safeguards for safety and protection. He will notify owners of adjacent utilities when prosecution of the Work may affect them. The Contractor will remedy all damage, injury or loss to any property, caused, directly or indirectly, in whole or in part, by the Contractor, any Subcontractor or anyone directly or indirectly employed by any of them or anyone for whose acts any of them be liable, except damage or loss attributable to the fault of the Contract Documents or to the acts or omissions of the Owner or the Geologist-Engineer or anyone employed by either of them or anyone for whose acts either of them may be liable, and not attributable, directly or indirectly, in whole or in part, to the fault or negligence of the Contractor.

4.11.3 In emergencies affecting the safety of persons or the Work or property at the site or adjacent thereto, the Contractor, without special instruction or authorization from the Geologist-Engineer or Owner, shall act to prevent threatened damage, injury or loss. He will give the Geologist-Engineer prompt Written Notice of any significant changes in the Work or deviations from the Contract Documents caused thereby, and a Change Order shall thereupon be issued covering the changes and deviations involved.

4.11.4 The Contractor shall post all local emergency telephone numbers for Police, Fire Department, Hospitals, etc. in the doghouse.

4.12 SUPERVISION BY CONTRACTOR

4.12.1 The Contractor will supervise and direct the Work. He will be solely responsible for the means, methods, techniques, sequences and procedures of construction. The Contractor will employ and maintain on the Work a qualified supervisor or superintendent who shall have been designated in writing by the Contractor as the Contractor's representative at the site. The supervisor shall have full authority to act on behalf of the Contractor and all communications given to the supervisor shall be as binding as if given to the Contractor. The supervisor shall be present on the site at all times as required to perform adequate supervision and coordination of the Work.

4.12.2 The qualified supervisor must be available for notification at all times and must be at the job site within four (4) hours of notification. All responses by the Contractor within this four (4) hour period shall be considered immediate response. The qualified supervisor must be able to make project decisions for the Contractor involving up to $250,000.00. In the event that the Contractor's supervisor is unavailable within the four (4) hour period, the Geologist-Engineer will shut down the Work as a Contractor instigated downtime until all decisions have been properly made by the Contractor or his representative.

4.12.3 All downtime required to wait for the qualified supervisor, including the four (4) hour response period shall be considered as Contractor instigated downtime.

4.13 CHANGES IN THE WORK

4.13.1 The Owner may at any time, as the need arises, order changes within the scope of the Work without invalidating the Agreement. If such changes increase or decrease the amount due under the Contract Documents, or in the time required for performance of the Work, an equitable adjustment shall be authorized by Change Order.

4.13.2 The Geologist-Engineer also, may at any time, by issuing a Field Order, make changes in the details of the Work. The Contractor shall proceed with the performance of any changes in the Work so ordered by the Geologist-Engineer. If the Contractor believes that such Field Order entitles him to a change in Contract Price or Time, or both, he shall immediately give the Geologist-Engineer Written Notice thereof. Thereafter, the Contractor shall document the basis for the change in Contract Price or Time within twenty four (24) hours and submit the document to the Geologist-Engineer. Following review of the documented information the Geologist-Engineer shall determine the validity of the request for a change order and the amount of change in the Contract Price or Time.

4.14 CHANGES IN CONTRACT PRICE

4.14.1 The Contract Price may be changed only by a Change Order. The value of any Work covered by a Change Order or of any claim for increase or decrease in the Contract Price shall be determined by one or more of the following methods in the order of precedence listed below:

1.14.1.1 Unit prices previously approved.

1.14.1.2 An agreed lump sum.

1.14.1.3 The actual cost for labor, direct overhead, materials, supplies, equipment, and other services necessary to complete the Work. In addition there shall be added an amount to be agreed upon but not to exceed fifteen percent (15%) of the actual cost of the Work to cover the cost of general overhead and profit.

4.15 TIME FOR COMPLETION AND LIQUIDATED DAMAGES

4.15.1 The date of beginning and the time for completion of the Work are essential conditions of the Contract Documents and the Work embraced shall be commenced on a date specified in the Notice To Proceed.

4.15.2 The Contractor will proceed with the Work at such rate of progress to insure full completion within the Contract Time. It is expressly understood and agreed, by and between the Contractor and the Owner, that the Contract Time for the completion

of the Work described herein is a reasonable time, taking into consideration the average climatic and economic conditions and other factors prevailing in the locality of the Work.

4.15.3 If the Contractor shall fail to complete the Work within the Contract Time, or extension of time granted by the Owner, then the Contractor will pay to the Owner the amount for liquidated damages as specified in the Bid for each calendar day that the Contractor shall be in default after the time stipulated in the Contract Documents. The method of payment shall be a reduction in the amount of monies owed to the Contractor for the Work performed.

4.15.4 The Contractor shall not be charged with liquidated damages or any excess cost when the delay in completion of the Work is due to the following and the Contractor has promptly given Written Notice of such delay to the Owner or Geologist-Engineer:

4.15.4.1 to any preference, priority or allocation order duly issued by the Owner;

4.15.4.2 to unforeseeable causes beyond the control and without the fault or negligence of the Contractor, including but not restricted to, acts of "God", or of the public enemy, acts of the Owner, acts of another Contractor in the performance of a contract with the Owner, fires, floods, epidemics, quarantine restrictions, strikes, freight embargoes, and abnormal and unforeseeable weather, and;

4.15.4.3 to any delays of Subcontractors occasioned by any of the causes specified in paragraphs 4.15.4.1 and 4.15.4.2 of this article.

4.16 CORRECTION OF WORK

4.16.1 The Contractor shall promptly remove from the premises all Work or supplies rejected by the Geologist-Engineer for failure to comply with the Contract Documents, whether incorporated in the construction or not, and the Contractor shall promptly replace and re-execute the Work in accordance with the Contract Documents and without expense to the Owner and shall bear the expense of making good all Work of other Contractors destroyed or damaged by such removal or replacement.

4.16.2 All removal and replacement Work shall be done at the Contractor's expense. If the Contractor does not take action to remove such rejected Work and/or materials within twenty four (24) hours after receipt of Written Notice, the Owner may remove such Work and /or materials and store the materials at the expense of the Contractor.

4.17 SUBSURFACE CONDITIONS

4.17.1 The Geologist-Engineer shall detail the known and available subsurface conditions, however, this does not imply that all the subsurface conditions or data are known by the Geologist-Engineer. Therefore, the Contractor must investigate the site(s) of

drilling and satisfy himself of the conditions which might be encountered. Further, unknown subsurface conditions are normal in drilling projects and the Contractor accepts these unknown conditions as part of the Project.

4.18 SUSPENSION OF WORK, TERMINATION AND DELAY

4.18.1 The Owner may suspend the Work or any portion thereof for a period of not more than ninety (90) days or such further time as agreed upon by the Contractor, by Written Notice to the Contractor and the Geologist-Engineer which notice shall fix the date on which Work shall be resumed. The Contractor will resume that Work on the date so fixed. The Contractor will be allowed an increase in the Contract Price or an extension of the Contract Time, or both, directly attributable to any suspension.

4.18.2 If the Contractor is adjudged bankrupt or insolvent, or if he makes a general assignment for the benefit of his creditors, or if a trustee or receiver is appointed for the Contractor or for any of his property, or if he files a petition to take advantage of any debtor's act, or to reorganize under the bankruptcy or applicable laws, or if he repeatedly fails to supply sufficient skilled workmen or suitable materials or equipment, or if he repeatedly fails to make prompt payments to Subcontractors or for labor, materials or equipment or if he disregards laws, ordinances, rules, regulations or orders of any public body having jurisdiction of the Work or if he disregards the authority of the Geologist-Engineer, or if he otherwise violates any provision of the Contract Documents, then the Owner may, without prejudice to any other right or remedy and after giving the Contractor and his surety a minimum of ten (10) days from delivery of a Written Notice, terminate the services of the Contractor and take possession of the Project and of all materials, equipment, tools, construction equipment and machinery thereon owned by the Contractor, and finish the Work by whatever method he may deem expedient. In such case the Contractor shall not be entitled to receive any further payment until the Work is finished. If the unpaid balance of the Contract Price exceeds the direct and indirect costs of completing the Project, including compensation for additional professional services, such excess shall be paid to the Contractor. If such costs exceed such unpaid balance, the Contractor will pay the difference to the Owner. Such costs incurred by the Owner will be determined by the Geologist-Engineer and incorporated in a Change Order.

4.18.3 Where the Contractor's services have been so terminated by the Owner, said termination shall not affect any right of the Owner against the Contractor then existing or which may thereafter accrue. Any retention or payment of monies by the Owner due the Contractor will not release the Contractor from compliance with the Contract Documents.

4.18.4 After ten (10) days from delivery of a Written Notice to the Contractor and the Geologist-Engineer, the Owner may, without cause and without prejudice to any other right or remedy, elect to abandon the Project and terminate the Contract. In such case, the Contractor shall be paid for all Work executed and any expense sustained plus fifteen (15) percent as reasonable profit.

4.18.5 If, through no act or fault of the Contractor, the Work is suspended for a period of more than ninety (90) days by the Owner or under an order of court or other public authority, or the Geologist-Engineer fails to act on any request for payment within thirty (30) days after it is submitted, or the Owner fails to pay the Contractor substantially the sum approved by the Geologist-Engineer or awarded by arbitrators within thirty (30) days of its approval and presentation, then the Contractor may, after then (10) days from delivery of a Written Notice to the Owner and the Geologist-Engineer, terminate the Contract and recover from the Owner payment for all Work executed and all expenses sustained. In addition and in lieu of terminating the Contract, if the Geologist-Engineer has failed to act on a request for payment or if the Owner has failed to make any payment as aforesaid, the Contractor may upon ten (10) days Written Notice to the Owner and the Geologist-Engineer stop the Work until he has been paid all amounts then due, in which event and upon resumption of the Work, Change Orders shall be issued for adjusting the Contract Price or extending the Contract Time, or both, to compensate for the costs and delays attributable to the stoppage of the Work.

4.18.6 If the performance of all or any portion of the Work is suspended, delayed, or interrupted as a result of a failure of the Owner or Geologist-Engineer to act within the time specified in the Contract Documents, or if no time is specified, within a reasonable time, an adjustment in the Contract Price or an extension of the Contract Time, or both, shall be made by Change Order to compensate the Contractor for the costs and delays necessarily caused by the failure of the Owner or Geologist-Engineer.

4.19 PAYMENTS TO CONTRACTOR

4.19.1 The Contractor shall submit to the Geologist-Engineer, the total billing for each well upon completion of all Work on each well including any and all tests. Payment shall constitute evidence that the Work on the paid well has been accepted by the Owner under the conditions of the Contract Documents.

4.19.2 The Owner shall have the right to enter the premises for the purpose of doing Work not covered by the Contract Documents. This provision shall not be construed as relieving the Contractor of the sole responsibility for the cost and protection of the Work, or the restoration of any damaged Work except such as may be caused by agents or employees of the Owner.

4.19.3 The Contractor will indemnify and save the Owner or the Owner's agents harmless from all claims growing out of the lawful demands of subcontractors, laborers, workmen, mechanics, materialmen, and suppliers of machinery and parts thereof, equipment, tools, and all supplies, incurred in the furtherance of the performance of the Work. The Contractor shall furnish satisfactory lien waivers as evidence that all obligations of the nature designated above have been paid, discharged, or waived. If the Contractor fails to do so the Owner may, after, having notified the Contractor, either pay unpaid bills or withhold from the Contractor's unpaid compensation a sum of money deemed reasonably sufficient to pay any and all such lawful claims until satisfactory evidence is furnished that all liabilities have been fully discharged whereupon payment to the Contractor shall be resumed, in accordance with the terms of the Contract Documents, but in no event shall the provisions of this

sentence be construed to impose any obligations upon the Owner to either the Contractor, his Surety, or any third party. In paying any unpaid bills of the Contractor, any payment so made by the Owner shall be considered as a payment made under the Contract Documents by the Owner to the Contractor and the Owner shall not be liable to the Contractor for any such payments made in good faith.

4.20 ACCEPTANCE OF FINAL PAYMENT AS RELEASE

4.20.1 The acceptance by the Contractor of final payment for authorized Work shall be and shall operate as a release to the Owner of all claims and all liability to the Contractor other than claims in stated amounts as may be specifically expected by the Contractor for all things done or furnished in connection with this Work and for every act and neglect of the Owner and others relating to or arising out of this Work. Any payment, however, final or otherwise, shall not release the Contractor or his sureties from any obligations under the Contract Documents or the Performance Bond and Payment Bonds.

4.21 INSURANCE

4.21.1 The Contractor shall purchase and maintain such insurance as will protect him, the Owner and the Geologist-Engineer from claims set forth below which may arise out of or result from the Contractor's execution of the Work, whether such execution be by himself or by any Subcontractor or by anyone directly or indirectly employed by any of them, or by anyone for whose acts any of them may be liable:

4.21.1.1 Claims under workmen's compensation, disability benefit and other similar employee benefit acts;

4.21.1.2 Claims for damages because of bodily injury, occupational sickness or disease, or death of his employees;

4.21.1.3 Claims for damages because of bodily injury, sickness or disease, or death of any person other than his employees;

4.21.1.4 Claims for damages insured by usual personal injury liability coverage which are sustained (1) by any person as a result of an offense directly or indirectly related to the employment of such person by the Contractor, or (2) by any other person; and

4.21.1.5 Claims for damages because of injury to or destruction of tangible property, including loss of use resulting therefrom.

4.21.2 Certificates of Insurance acceptable to the Owner shall be filed with the Owner prior to commencement of the Work. These Certificates shall contain a provision that coverage afforded under the policies will not be cancelled unless at least fifteen (15) days prior Written Notice has been given to the Owner.

4.21.3 The Contractor shall procure and maintain, at his own expense, during the Contract Time. liability insurance as hereinafter specified:

4.21.3.1 Contractor's General Public Liability and Property Damage Insurance including vehicle coverage issued to the Contractor and protecting him from all claims for personal injury, including death, and all claims for destruction of or damage to property, arising out of or in connection with any operations under the Contract Documents, whether such operations be by himself or by any Subcontractor under him, or anyone directly or indirectly employed by the Contractor or by a Subcontractor under him. Insurance shall be written with a limit of liability of not less than $2,000,000.00 (two million dollars) for all damages arising out of bodily injury, including death, at any time resulting therefrom, sustained by any one person in any one accident; and a limit of liability of not less than $4,000,000.00 (four million dollars) aggregate for any such damages sustained by two or more persons in any one accident. Insurance shall be written with a limit of liability of not less than $1,000,000.00 (one million dollars) for all property damage sustained by any one person in any one accident; and a limit of liability of not less than $1,000,000.00 (one million dollars) aggregate for any such damage sustained by two or more persons in any one accident. The Owner and the Geologist-Engineer shall be named as additional insured.

4.21.3.2 The Contractor shall acquire and maintain, if applicable, Fire and Extended Coverage insurance upon the Project to the full insurable value thereof for the benefit of the Owner, the Contractor, and Subcontractors as their interest may appear. This provision shall in no way release the Contractor or Contractor's surety from obligations under the Contract Documents to fully complete the Project.

4.21.4 The Contractor shall procure and maintain, at his own expense, during the Contract Time, in accordance with the provisions of the laws of the State in which the Work is performed, Workmen's Compensation Insurance, including occupational disease provisions, for all of his employees at the site of the Project and in case any Work is sublet, the Contractor shall require such Subcontractor similarly to provide Workmen's Compensation Insurance, including occupational disease provisions for all of the latter's employees unless such employees are covered by the protection afforded by the Contractor. In case any class of employees engaged in hazardous Work under this contract at the site of the Project is not protected under Workmen's Compensation statute the Contractor shall provide, and shall cause each Subcontractor to provide, adequate and suitable insurance for the protection of his employees not otherwise protected.

4.21.5 The Contractor shall secure, if applicable, "All Risk" type Builder's Risk Insurance for Work to be performed. Unless specifically authorized by the Owner, the amount of such insurance shall not be less than the Contract Price totaled in the Bid. The policy shall cover not less than the losses due to fire, explosion, hail, lightning,

vandalism, malicious mischief, wind, collapse, riot, aircraft, and smoke during the Contract Time, and until the Work is accepted by the Owner. The policy shall name as the insured the Contractor, the Geologist-Engineer, and the Owner.

4.21.6 Should any policy lapse, or should the proper insurance not be supplied, the Geologist-Engineer will immediately shut down the project, without compensation to the Contractor. The Contractor will be given a Return To Work order when all insurance is again current. In the event the insurance is not reinstated within ten (10) days, the contract becomes null and void. Should the contract be forfeited in this manner, all monies not paid the Contractor for Work completed, shall be retained by the Owner as liquidated damages.

4.22 CONTRACT SECURITY

4.22.1 The Contractor shall within ten (10) days after the receipt of the Notice of Award furnish the Owner with a Performance Bond and a Payment Bond in penal sums equal to the amount of the Contract Price, conditioned upon the performance by the Contractor of all undertakings, covenants, terms, conditions, and upon the prompt payment by the Contractor to all persons supplying labor and materials in the prosecution of the Work provided by the Contract Documents. Such Bonds shall be executed by the Contractor and a corporate bonding company licensed to transact such business in the State in which the Work is to be performed and acceptable to the Owner. The expense of these Bonds shall be borne by the Contractor. If at any time a surety on any such Bond is declared a bankrupt or loses its right to do business in the State in which the Work is to be performed, Contractor shall within ten (10) days after notice from the Owner to do so, substitute an acceptable Bond (or Bonds) in such form and sum and signed by such other surety or sureties as may be satisfactory to the Owner. The premiums on such Bond shall be paid by the Contractor. No further payments shall be deemed due nor shall be made until the new surety or sureties shall have furnished an acceptable Bond to the Owner.

4.22.2 In lieu of the Performance Bond and Payment Bond the Owner and Contractor may agree and elect to have the Owner hold all monies due and payable on the Work until the authorized Work is completed. Payment in full would then be made within thirty (30) days following acceptance of the completed Work.

4.23 ASSIGNMENTS

4.23.1 Neither the Contractor nor the Owner shall sell, transfer, assign or otherwise dispose of the Contract or any portion thereof, or of his right, title or interest therein, or his obligations thereunder, without written consent of the other party.

4.24 INDEMNIFICATION

4.24.1 The Contractor will indemnify and hold harmless the Owner and the Geologist-Engineer and their agents and employees from and against all claims, damages, losses and expenses including attorney's fees arising out of or resulting from the performance of the Work, provided that any such claims, damage, loss or expense

is attributable to bodily injury, sickness, disease or death, or to injury to or destruction of tangible property including the loss of use resulting therefrom; and is caused in whole or in part by any negligent or willful act or omission of the Contractor, and his Subcontractors, anyone directly or indirectly employed by any of them or anyone for whose acts any of them may be liable.

4.24.2 In any and all claims against the Owner or the Geologist-Engineer, or any of their agents or employees, by any employee of the Contractor, any Subcontractor, anyone directly or indirectly employed by any of them, or anyone for whose acts any of them may be liable, the indemnification obligation shall not be limited in any way by any limitation on the amount or type of damages, compensation or benefits payable by or for the Contractor or any Subcontractor under workmen's compensation acts, disability benefit acts or other employee benefits acts.

4.24.3 The obligation of the Contractor under this paragraph shall not extend to the liability of the Geologist-Engineer, his agents or employees arising out of the preparation or approval of maps, Drawings, opinions, reports, surveys, Change Orders, designs, or Specifications.

4.25 SEPARATE CONTRACTS

4.25.1 The Owner reserves the right to let other contracts in connection with this Project. The Contractor shall afford other Contractors reasonable opportunity for the introduction and storage of their materials and the execution of their Work, and shall properly connect and coordinate his Work and theirs. If the proper execution or results of any part of the Contractor's Work depends upon the Work of any other Contractor, the Contractor shall inspect and promptly report to the Geologist-Engineer any defects in such Work that render it unsuitable for such proper execution and results.

4.25.2 The Owner may perform additional Work related to the Project, or he may let other contracts containing provisions similar to these. The Contractor will afford the other Contractors who are parties to such Contracts (or the Owner, if he is performing the additional Work himself), reasonable opportunity for the introduction and storage of materials and equipment and the execution of Work, and shall properly connect and coordinate his Work with theirs.

4.25.3 If the performance of additional Work by other Contractors or the Owner is not noted in the Contract Documents prior to the execution of the Contract, written notice thereof shall be given to the Contractor prior to starting any such additional Work. If the Contractor believes that the performance of such additional Work by the Owner or others involves him in additional expense or entitles him to an extension of the Contract Time, he may make a claim therefor as provided in Sections 4.14 and 4.15.

4.26 SUBCONTRACTING

4.26.1 The Contractor may utilize the service of specialty Subcontractors on those parts of the Work which, under normal contracting practices, are performed by specialty Subcontractors.

4.26.2 The Contractor shall not award Work to Subcontractor(s), in excess of thirty percent (30%) of the Contract Price, without prior written approval of the Owner.

4.26.3 The Contractor shall be fully responsible to the Owner for the acts and omissions of his Subcontractors, and of persons either directly or indirectly employed by them, as he is for the acts and omissions of persons directly employed by him.

4.26.4 All contracts between the prime Contractor and the Subcontractors shall incorporate all provisions covered in the prime contract.

4.26.5 The Contractor shall cause appropriate provisions to be inserted in all subcontracts relative to the Work to bind Subcontractors to the Contractor by the terms of the Contract Documents insofar as applicable to the Work of Subcontractors and to give the Contractor the same power as regards terminating any subcontract that the Owner may exercise over the Contractor under any provision of the Contract Documents.

4.26.5 Nothing contained in this Contract shall create any contractual relation between any Subcontractor and the Owner.

4.27 GEOLOGIST-ENGINEER'S AUTHORITY

4.27.1 The Geologist-Engineer shall act as the Owner's representative during the construction period. He shall decide questions which may arise as to quality and acceptability of materials furnished and Work performed. He shall interpret the intent of the Contract Documents in a fair and unbiased manner. The Geologist-Engineer will make visits to the site and determine if the Work is proceeding in accordance with the Contract Documents.

4.27.2 The Contractor and all Subcontractors will be held strictly to the intent of the Contract Documents in regard to the quality of materials, workmanship and execution of the Work. Inspections may be made at the factory or fabrication plant of the source of material supply.

4.27.3 The Geologist-Engineer will specify the methods and types of construction, however, the Geologist-Engineer is not responsible for the construction means, controls, techniques, sequences, procedures, or construction safety. The Geologist-Engineer may shut down the project as a Contractor instigated downtime if the Contractor is in violation of the specifications regarding the construction methods and if, in the opinion of the Geologist-Engineer, construction safety is compromised.

4.27.4 The Geologist-Engineer shall promptly make decisions relative to interpretation of the Contract Documents.

4.28 LAND AND RIGHTS-OF-WAY

4.28.1 Prior to issuance of Notice to Proceed, the Owner shall obtain all land and rights-of-way necessary for carrying out and for the completion of the Work to be performed pursuant to the Contract Documents, unless otherwise mutually agreed.

4.28.2 The Owner shall provide to the Contractor information which delineates and describes the lands owned and rights-of-way acquired.

4.28.3 The Contractor shall provide at his own expense and without liability to the Owner any additional land and access thereto that the Contractor may desire for temporary construction facilities, or for storage of materials.

4.29 GUARANTY

4.29.1 The Contractor shall guarantee all materials and equipment furnished and Work performed for a period of one (1) year from the date of Substantial Completion of the authorized Work. The Contractor warrants and guarantees for a period of one (1) year from the date of substantial completion of the system that the completed system is free from all defects due to faulty materials or workmanship and the Contractor shall promptly make such corrections as may be necessary by reason of such defects including the repairs of any damage to other parts of the system resulting from such defects. The Owner will give notice of observed defects with reasonable promptness. In the event that the Contractor should fail to make such repairs, adjustments, or other Work that may be made necessary by such defects, in a timely fashion, the Owner may do so and charge the Contractor the cost thereby incurred.

4.30 ARBITRATION

4.30.1 All claims, disputes and other matters in question arising out of, or relating to, the Contract Documents or the breach thereof, except for claims which have been waived by the making and acceptance of final payment as provided by Section 4.20, shall be decided by arbitration in accordance with the Construction Industry Arbitration Rules of the American Arbitration Association. This agreement to arbitrate shall be specifically enforceable under the prevailing arbitration law. The award rendered by the arbitrators shall be final, and judgment may be entered upon it in any court having jurisdiction thereof.

4.30.2 Notice of the demand for arbitration shall be filed in writing with the other party to the Contract Documents and with the American Arbitration Association, and a copy shall be filed with the Geologist-Engineer. Demand for arbitration shall in no event be made on any claim, dispute or other matter in question which would be barred by the applicable statute of limitations.

4.30.3 The Contractor will carry on the Work and maintain the progress schedule during any arbitration proceedings, unless otherwise mutually agreed in writing.

4.31 TAXES

4.31.1 The Contractor will pay all federal, state, and local sales, consumer, use and other similar taxes required by the law of the place where the Work is performed, i.e. all taxes are included in the bid prices.

PART V SUPPLEMENTAL GENERAL CONDITIONS

PART V SUPPLEMENTAL GENERAL CONDITIONS

5.1 SCOPE OF WORK

5.1.1 The Work to be done by the Contractor under these specifications includes:

5.1.1.1 furnishing of all labor, transportation, tools, supplies, plant equipment and appurtenances, unless hereinafter specifically excepted, necessary for the complete and satisfactory construction of and supplying all the materials, screen and casing for the Well(s) as described herein.

5.1.1.2 furnishing of all labor, test pump, transportation, tools, supplies, plant equipment and appurtenances for the satisfactory completion of the test pumping program as described herein;

5.1.1.3 furnishing of all labor, materials, tools and supplies to complete any and all incidental Work on the Well(s) and Well site required for the completion of the Well(s) whether or not described herein;

5.1.2 All materials shall be new, unless otherwise specified, and of the specified quality. All workmanship shall be first class in every respect and according to the best approved methods employed by skilled workers. No payment or certificate of acceptance, final or otherwise, shall be construed as relieving the Contractor from his obligation to make good any defects or consequences thereof, discovered in his Work or materials used therein after completion and acceptance of same or as a waiver of any specific obligation the Contractor may have assumed as to the durability of his Work. If the Work or any portion thereof shall be damaged in any way, except by acts of the Owner or if defects not readily detected by inspection shall develop within one (1) year of the completion and acceptance of the Work, the Contractor shall immediately remedy at its own expense such damage or defects.

5.1.3 The Contractor shall furnish for approval samples of materials or articles when so directed by the Geologist-Engineer. The Work shall be in accordance with approved samples where submitted.

5.1.4 At all times during the performance of the Work the closest cooperation between the Contractor and the Geologist-Engineer shall be maintained to facilitate completion of the Work, and to protect all persons and property. Contractor agrees to abide by all the Geologist-Engineer's safety rules and regulations when on the project site. The Geologist-Engineer and duly authorized public officials desiring to inspect the Work shall have free access to the premises. Upon request the Contractor shall furnish complete information concerning the progress of the Work to the Geologist-Engineer.

5.2 ELIGIBILITY OF CONTRACTOR

A Contractor to be eligible to submit a bid shall:

5.2.1 Be duly licensed as a Drilling Contractor in the State of Arizona by the Arizona Department of Water Resources for performing the type of Work defined in the Specifications and Contract Documents;

5.2.2 Be duly registered with the Registrar of Contractors as holding an A, A-4 or A-16 registration;

5.2.3 Have five (5) years experience as a Drilling Contractor utilizing the drilling method required in the Specifications for the completion of the Project and have completed at least twenty (20) wells with a minimum diameter casing of twelve (12) inches. utilizing this drilling method.

5.3 PROPOSAL

5.3.1 Bids to receive consideration shall be made in accordance with the following instructions.

5.3.2 Prior to submitting a bid, each bidder shall:

5.3.2.1 Carefully read these Specifications and Contract Documents;

5.3.2.2 Review the well data and geologic data included herein;

5.3.2.3 Attend the mandatory pre-bid conference;

5.3.2.4 Visit the site of the proposed Project, and;

5.3.2.5 Fully inform himself as to all existing geologic and other conditions and/or limitations to construction of the Work.

5.3.3 The inclusion of geologic and hydrologic data herein may not constitute the entire complement of data available and such is not warranted by the Geologist-Engineer. Thus, the inclusion of geologic and hydrologic data does not excuse the bidder from being fully informed of the existing conditions.

5.3.4 Bids shall be properly executed upon the Bid Schedule and Proposal form attached to and made part of the Specifications and Contract Documents. Numbers shall be stated both in writing and in figures, and the signatures of all persons signing shall be in longhand. The completed forms shall be without interlineation, alterations or erasures. In case of a difference in the written words and figures in the Bid Schedule and Proposal, the amount stated in the written words shall govern. The sums on the Bidding Schedule shall constitute the total costs of the Work included in these Specifications and Contract Documents.

5.3.5 Bids shall not contain any recapitulations of the Work to be done. Alternative proposals will not be considered unless expressly called for. No oral, telegraphic, telephonic or modified proposals will be considered. All changes made to the Specifications and Contract Documents prior to the Bid date shall be by a duly issued, written Addenda.

5.4 EXAMINATION OF SITE AND SPECIFICATIONS AND CONTRACT DOCUMENTS

5.4.1 The Contractor shall visit the site of the Project and shall become fully acquainted with all the conditions as they exist, as necessary to fully understand the facility, difficulties and restrictions attending the execution of the Work.

5.4.2 By submitting a proposal, the Contractor represents that the Contractor has examined the site, the Specifications and Contract Documents, and has made all necessary evaluation of the geologic and hydrologic characteristics of the area and accepts, without recourse, all existing site conditions and all conditions stipulated in the proposed Specifications and Contract Documents.

5.4.3 By submitting a proposal, the Contractor acknowledges that he has thoroughly and carefully read and understands the Specifications and Contract Documents and has no basis to plead misunderstanding of any provisions thereof.

5.5 EXECUTION OF THE CONTRACT

5.5.1 The bidder to whom the award is made shall execute a written contract with the Owner on the Contract Agreement form provided, and shall secure all bonds and insurance required under the Specifications and Contract Documents within ten (10) days from the date of the award, submitting proof of said insurance with the signed contract. Failure or refusal to enter into a contract as herein provided, or to conform to any of the stipulated requirements in connection therewith shall be just cause for the annulment of the award and forfeiture of the award of contract.

5.6 BID BOND

5.6.1 A bid bond or cashier's check equal to five percent (5%) of the to the total bid price of the project shall be submitted as a part of the bid. The bid bond shall not be qualified. A qualified bid bond will constitute a no bid.

5.6.2 The bid bond or cashier's check of non-successful bidders will be released upon formal completion of the Contract Documents with the successful bidder.

5.7 PERFORMANCE AND PAYMENT BONDS

5.7.1 Simultaneously with the execution of the Contract Documents, the successful bidder will be required to furnish a bond for labor, material and performance of contract, and a payment bond, each in an amount equal to the total bid price of the completed Work.

5.7.2 The Performance and Payment Bonds will be released upon completion and acceptance of the Work and the Well(s) and submittal of lien waivers and releases for all labor and materials.

5.8 IN LIEU OF BONDING

5.8.1 The Owner, at its sole option, and in agreement with the successful bidder, may elect to delete the requirement for Bid, Performance and Payment Bonds. In lieu of bonding, the Owner will retain all monies due under the Contract Documents until the Work is completed.

5.8.2 Upon completion of the authorized Work, satisfaction of all conditions of the Contract Documents and submittal of lien waivers and releases for all labor and materials used in this project, the Owner will pay the Contractor the full amount of the Contract within thirty (30) days of submittal of the required documents.

5.9 PERMITS, CERTIFICATES, LAWS AND ORDINANCES

5.9.1 The Contractor shall, at its own expense, procure all Federal, State and Local permits, certificates and licenses required by law for the execution of the Work. The Contractor shall comply with all Federal, State and Local laws, ordinances, rules and regulations relating to the performance of the Work. No Work is to start until all permits, certificates and licenses required of the Contractor are obtained and properly displayed by the Contractor.

5.9.2 The Owner will obtain the Drilling Permits from the Arizona Department of Water Resources.

5.10 COMPETENT WORKMEN

5.10.1 The Contractor shall employ only competent workmen for the execution of the Work and all such Work shall be performed under the direct supervision of an experienced well driller satisfactory to the Geologist-Engineer.

5.10.2 Resumes of all key personnel shall be submitted to the Geologist-Engineer by the successful Bidder within ten (10) days following the award of contract.

5.10.3 All personnel supplied by the Contractor are subject to the approval of the Geologist-Engineer. The Contractor agrees that the Geologist-Engineer has the right to reject any employee of the Contractor and may request the removal of any employee from the Project for any reason.

5.11 ALCOHOL AND DRUG TESTING

5.11.1 Alcohol and drug testing is mandatory upon the request of the Geologist-Engineer as a safety rule on the operation of heavy equipment. The Contractor shall have the means and ability to conduct such testing available on request.

5.12 ENVIRONMENTAL ISSUES

5.12.1 The Contractor shall lay plastic under all equipment to contain all hydrocarbons and other waste products with the intent to preclude all foreign materials from reaching the soil.

5.12.2 The Contractor shall give written notification of any spill of any material other than biodegradable or non-toxic chemicals of five (5) gallons or more to the Project Officer and to the Geologist-Engineer within three (3) hours of the time of spill.

5.12.3 The Contractor will be considered responsible for the spill of any material other than the biodegradable or non-toxic chemicals utilized in the drilling fluid. Should such a spill occur, the Contractor shall immediately clean up the material spilled so as to meet the environmental standards described in the EPA specifications for the material spilled.

5.13 OPERATING TIME

5.13.1 The drilling rig shall operate twenty-four (24) hours per day, seven (7) days per week during the drilling and construction cycle of the program. A ten to twelve (10-12) hour day may be utilized for the mobilization and rigging cycle of the program.

5.13.2 Installation and removal of the test pump may be conducted on a ten to twelve (10-12) hour day with pump run time conducted on a twenty-four (24) hour, seven (7) day a week basis.

5.13.3 Personnel off time can be scheduled whenever the drilling rig is not in the drilling or construction mode and the test pump is not in the running cycle. During the personnel off time the drilling rig or the test pump rig may be inactive for a maximum period of four (4) days.

5.14 PAYMENT

5.14.1 A payment schedule acceptable to both the Owner and the Contractor shall be developed provided that performance and payment bonds are in place. In the case of "in lieu" of bonding, payment will be made within thirty (30) days from the final acceptance of the well by the Geologist-Engineer and the Owner.

5.14.2 Payment for lump sum items will be the lump sum bid. Payment for items with a unit bid will be based on the number of units of each item incorporated in the well. The cost of drilling bits is to be incorporated in the bid price for drilling the well with the exception of "Bedrock" drilling as defined in Item 5.21.

5.14.3 Payment for testing procedures and periods which cannot be specified in detail herein but which fall under the purview of the Specifications and Contract Documents will be made on the following basis. Payment for rented tools, packer and appurtenances required for special procedures not included in the Bid Schedule, will be made to the Contractor at the invoice price of the supplier. Payment for testing procedures, equipment and periods will be made at the hourly rate bid on the Bid Schedule based on number of hours required for each test.

5.14.4 Measurement of standby time will be made only for inactive periods resulting from requirements of the Contract over which the Contractor has no control as defined in Item 4.1.21 Standby Time.

5.14.5 Measurement of development time will be made on the basis of time the tools and equipment are being operated.

5.14.6 The bid price shall incorporate ALL Federal, state and local taxes and the cost of all permits, certificates and required operating fees. No payment will be made other than the unit prices quoted on the Bid Schedule.

5.15 PROVISIONS REGARDING SAFETY, HEALTH AND SANITATION

5.15.1 The Contractor shall at all times fully comply with ALL applicable Federal, State and Local laws and regulations governing safety, health and sanitation.

5.15.2 The Contractor shall provide all safeguards, safety devices and protective equipment and take any other needed actions, on his own responsibility, to protect the life and health of employees on the job and the safety of the public, and to protect property in connection with the performance of the Work covered by the Contract.

5.15.3 In the event that the Contractor fails to meet the standards of safety as defined by the rules and regulations stated above, the Geologist-Engineer shall issue a field order stopping all Work, as a Contractor instigated downtime, until all the safety regulations are in effect on the project.

5.16 FINAL CLEANUP AND GRADING

5.16.1 The Contractor shall be required to do such grading as is incidental to the Work. After completion of all Work, the Contractor shall remove all debris, all temporary structures, and fill any excavations or pits, including the removal of soil and debris resulting from the Work operations, leaving the site clean and neat. At all times the Contractor shall govern his Work so as to retain the natural character (existing vegetation, rock and topography) of the site and to preserve the existing natural character of surrounding land.

5.16.2 The Contractor shall clean and grade all staging areas as though these areas were a part of the drilling site.

5.16.3 Supplemental grading to float soil under fences or to form barriers on the site shall be considered part of the final site clean up and grading.

5.16.4 The Contractor shall repair and/or replace any man made item or vegetation destroyed by the Contractor during the drilling, construction and testing of the Well(s).

5.17 CHANGE ORDERS AND EXTRAS

5.17.1 There shall be no extra Work at added cost to the contract price unless such Work and price change is issued by a written Change Order signed by the Geologist-Engineer. To maintain a flexible Work schedule, changes to these Specifications and Contract Documents which do not include a price change may be made by the Geologist-Engineer by written entry into the Driller's Daily Work Log or issued as a field order.

5.18 RECORDS AND SAMPLES

5.18.1 Drilling Log: During the drilling the Contractor shall keep an accurate record of progress on the well and materials encountered in drilling, together with the depths at which they occur. The Drilling Log shall also record the viscosity and weight of the drilling fluid at least once during each tower from initiation of drilling until completion of the jetting portion of the construction of the Well(s). In addition, the Drilling Log shall record the type of bit utilized and the depths each bit was used. Upon completion of the Work, a complete log of the well shall be furnished the Owner in duplicate.

5.18.2 Drill Cuttings: Unwashed samples of the drill cuttings shall be taken at 10-foot intervals by the Contractor and preserved in suitable containers labeled to indicate the well number, legal description and the depth at which taken (depth below surface of ground in feet).

5.18.3 Downhole Log Suite: Downhole logs shall be run when called for in the Technical Specifications. Upon completion of the logging program, the Logging Contractor shall deliver to the Geologist-Engineer the original and all copies of the logs run. The Geologist-Engineer retains the sole right of distribution of said logs.

5.18.4 Casing Log: The Contractor shall keep an accurate record as assembled of the order, number, size and lengths of the individual pieces of pipe installed in each well and the areas of perforations and all other cuts or holes in the casing with accurate depths to each. This log will also show the locations of all packer, plugs, seals, screens and reductions.

5.18.5 Samples: All additional samples not requiring additional Work or specialized equipment requested by the Geologist-Engineer, such as water samples, etc., shall be obtained by the Contractor, placed in suitable containers, labeled and given to the Geologist-Engineer.

5.18.6 In addition to supplying the preceding logs and samples, all information shall be entered, in a timely fashion, on IADC API Official Daily Drilling Report Form 2T-4.

5.18.7 All records shall be open to the inspection of the Owner and the Geologist-Engineer at all times.

5.18.8 The Contractor shall file all such reports as required by all governmental agencies.

5.18.9 Upon completion of each well, the Contractor shall submit to the Geologist-Engineer, one (1) copy of each log, all samples collected and records kept during the drilling and testing program.

5.19 LOST CIRCULATION

5.19.1 At the pre-construction conference, the Contractor shall supply a list of EPA acceptable Lost Circulation Materials that will be onsite.

5.19.2 Immediately upon loss of circulation, defined herein as the loss of drilling fluid in excess of five hundred (500) gallons per minute, the Contractor shall notify and thereafter keep in constant contact with the Geologist-Engineer. All procedures for recovery of circulation are to be discussed prior to implementation.

5.19.3 In the event that circulation is lost and cannot be re-established within two (2) hours, this clause shall take effect.

5.19.4 The payment schedule shall change from footage basis to hourly basis until circulation is re-established and maintained for two (2) hours, following which the payment schedule shall revert to the footage basis in the Bid Schedule.

5.19.5 The Owner shall pay the invoice price plus fifteen (15) percent of all materials utilized in the drilling fluid during the lost circulation period retroactive to the time of lost circulation until circulation is re-established.

5.20 INABILITY TO COMPLETE WELL

5.20.1 In the event of the inability of the Contractor to complete the Well(s) in accordance with the terms and conditions stated in these Specifications and Contract Documents for the following reasons:

5.20.1.1 Encountering hydrologic bedrock, which shall be defined by the Geologist-Engineer;

5.20.1.2 Request of termination of the drilling program by the Owner;

5.20.1.3 Acts of God, such as earthquakes, floods or fires;

5.20.1.4 Destruction of the Well(s) by others beyond the control of the Contractor;

5.20.1.5 Acts of the government or political subdivisions thereof;

then the Contractor shall remove all casing, if possible, and fill the hole in accordance with Item 5.22 Abandonment, as directed by the Geologist-Engineer. In this case, the Owner shall compensate the Contractor in accordance with the bid prices listed herein. The salvaged material becomes the property of the Owner.

5.20.2 In the event of the inability of the Contractor to complete a well in accordance with the terms and conditions stated in these Specifications and Contract Documents for any cause other than stated in Item 5.20.1, such as lost tools in the hole, collapsed casing or collapsed well bore, or should the Contractor abandon the hole voluntarily for any cause, the Contractor shall, at its own expense, as directed by the Geologist-Engineer, fill the abandoned hole in accordance with Item 5.22 Abandonment. Salvaged material furnished by the Contractor shall remain the Contractor's property for re-use in completing the contract, providing the material is undamaged and usable. The Contractor shall immediately commence drilling a new well at a point to be designated in writing and located by the Geologist-Engineer, which new well shall be completed in accordance with all terms and conditions provided herein. The Contractor shall carry the new well to the depth at which the preceding well was lost free of any additional cost to the Owner.

5.21 BEDROCK

5.21.1 In the event that bedrock of a granitic (igneous intrusive) or metamorphic nature is encountered and penetrated a minimum distance of fifty (50) feet, to determine that the rock encountered is not a boulder, the well may be:

5.21.1.1 Completed to the total depth of penetration;

5.21.1.2 Deepened by continued drilling, or;

5.21.1.3 Abandoned in accordance with Item 5.22 Abandonment, as directed by the Geologist-Engineer.

whichever is determined by the Owner.

5.21.2 At that point in time when the Contractor believes the drill has penetrated a minimum thickness of fifty (50) feet of bedrock, the Contractor shall request a conference with the Geologist-Engineer to initiate the process of determining the presence or absence of bedrock and to present the evidence to substantiate the Contractor's opinion.

5.21.3 The Geologist-Engineer shall determine the presence or absence of bedrock utilizing the following criteria, shape and size of drill cuttings, single or multiple mineral or rock type, degree of rounding of rock grains, acid reaction on drill cuttings, penetration rate, weight on drill bit, rate of rotation, downhole logging suite and other available data.

5.21.4 In the event that the Contractor disagrees with the assessment of the Geologist/ Engineer pertaining to the presence or absence of bedrock, the Contractor, at his expense, may conduct the following procedure.

5.21.4.1 Replace the bit with a new or unused rebuilt bit of the diameter of the hole being drilled and drill for a period of eight (8) hours with a bit weight of 2,700 pounds per diameter inch of the bit at a rotation rate of 35 rpm. If the average drilling rate for the eight (8)

hours of active drilling is less than three and one half (3.5) feet per hour then the subsurface materials being penetrated shall be considered bedrock.

5.21.4.1.1 In the event that bedrock is determined by this process, the Contractor shall be compensated for the eight (8) hours of drilling plus six (6) hours at the hourly rate bid for bedrock drilling to compensate the Contractor for the trip time.

5.21.4.1.2 In the event that the materials are determined not to be bedrock, the Contractor shall be compensated for the lineal footage drilled during this test period at the unit rate bid for the drilling of the well bore.

5.21.5 In the event that the formation being drilled is judged to be bedrock and the Owner elects to deepen the hole by continued drilling, the cost of drilling the bedrock after the minimum fifty (50) feet of penetration shall change from the unit price to the hourly rate stated in the Bid Schedule. In addition, the Owner shall pay the pro-rata portion of wear on the bit(s) utilized in drilling during the hourly rate pay period which means that if fifteen percent (15%) of the bit life is utilized in this well, the Owner will pay fifteen percent (15%) of the wholesale cost of the bit. The bit cost shall be established by the bit manufacturer's invoice. The Contractor shall submit the cost of the bit(s) to the Geologist-Engineer at a conference initiating the bedrock presence or absence determination.

5.21.6 Layers of sedimentary or volcanic (igneous extrusive) rocks are not considered bedrock. Conglomerate is not considered bedrock unless it is metamorphosed, i.e. sandstone to quartzite or sedimentary rocks to schist.

5.21.7 All decisions made under this item shall be added to the Contract by means of a written Field Order if negative and a duly issued written Change Order if bedrock is encountered.

5.22 ABANDONMENT

5.22.1 Should it be necessary to abandon any well, the well bore shall be filled from the bottom to fifty (50) feet below the surface with cement or a mixture of bentonite mud, gravel and/or drill cuttings and lost circulation materials. The viscosity of the bentonite shall exceed seventy-five (75) seconds per liter. The lost circulation materials shall be an inert material such as cellophane, or mica. After the viscosity and lost circulation materials have been developed and added, the gravel and/or drill cuttings shall be added to the slurry. The final slurry shall be tremie piped (drill pipe if selected) into the well bore.

5.22.2 The well bore from the ten (10) feet to fifty (50) feet shall be filled with a concrete mixture consisting of equal parts of cement and sharp mortar sand.

5.22.3 The top ten (10) feet of the well bore shall be filled with topsoil.

5.22.4 The selection of the materials to be utilized in the abandonment procedure will be made by the Geologist-Engineer.

5.22.5 This specification satisfies Arizona Administrative Rules and Regulations Title 12 Chapter 15 Article 8, specifically R12-15-816 Abandonment.

PART VI SPECIAL CONDITIONS

PART VI SPECIAL CONDITIONS

6.1 PRE-BID CONFERENCE

6.1.1 Attendance of the Pre-Bid Conference is a mandatory condition of bidding this Project.

6.1.2 The Pre-Bid Conference will consist of a discussion of the Specifications and Contract Documents and to answer questions pertaining to the Specifications and Contract Documents followed by a tour of the drill and/or construction site(s).

6.1.3 The Pre-Bid Conference will be held at the offices of the Mohave County Economic Development Authority, Inc., 3160 Shrangri La Drive, Kingman, AZ 86401. Telephone 520-692-6970.

6.2 EQUIPMENT

6.2.1 The Contractor shall supply the following operational drilling equipment to each drill site:

6.2.1.1 A reverse rotary drilling rig capable of drilling to a depth of two thousand (2,000) feet with six (6) inch inside diameter drill pipe throughout and a rated hook load of one hundred thousand (100,000) pounds;

6.2.1.2 An air compressor capable of delivering at least a continuous seven hundred and fifty (750) cubic feet per minute at a constant pressure of three hundred (300) pounds per square inch;

6.2.1.3 A geolograph;

6.2.1.4 A drill string weight indicator;

6.2.1.5 A complete set of mud analysis equipment, and;

6.2.1.6 All other pertinent equipment and tools required for operation of the drilling rig.

6.2.2 The Contractor shall supply the following test pump equipment:

6.2.2.1 A self propelled pump service rig with a minimum pulling capacity of thirty five (35) tons;

6.2.3 The Contractor shall supply the following supplemental equipment which are to be present and operative at all times:

6.2.3.1 All rigs shall be equipped with cellular telephones fitted with an exterior optical signal visible to the operating personnel on the drill floor, the test pump area and/or the surrounding area;

6.2.3.2 All supervisory personnel shall be equipped with a cellular telephone and pager;

6.2.2.3 A portable toilet and hand washing equipment shall be on site at all times during the drilling and testing program;

6.2.2.4 A complete set of the Specifications and the Contract Documents without bid prices shall be on each drill rig or test rig at all times during the period of the Project;

6.2.2.5 Other equipment as required.

6.2.3 Two way radios are not acceptable replacement equipment for cellular telephones.

6.2.4 All equipment supplied for the Project shall be approved by the Geologist-Engineer. Any equipment which does not meet the approval of the Geologist-Engineer must be removed from the Project area at the Geologist-Engineer's request and replaced with approved equipment.

6.2.5 All equipment supplied by the Contractor shall be adequate for the performance of the required duty and fully functional throughout the entire period of the contract.

6.3 DUST CONTROL

6.3.1 The Contractor shall maintain a dust control program to reduce and/or eliminate dust formation on the ingress and Work site during the entire period of the drilling and testing procedures.

6.4 SUBMITTALS

6.4.1 Upon the Award of Contract and prior to the Letter to Proceed, the Contractor will submit to the Geologist-Engineer:

6.4.1.1 A PERT or Critical Path flow diagram illustrating the Work flow;

6.4.2.2 Shop drawings of all materials, fabrications and/or equipment to be installed in the Project as stated in Item 4.5 SHOP DRAWINGS.

6.4.2 The Contractor shall submit a weekly progress report detailing the Work completed, the Work in progress, a revised Critical Path flow diagram and the projected completion date at the stated weekly meeting of the Contractor, the Project Officer (Owner's Representative) and the Geologist-Engineer.

6.5 TIME FOR COMPLETION, LIQUIDATED DAMAGES AND FORFEITURE OF CONTRACT

6.5.1 The Project shall be initiated ten (10) days following the Notice to Proceed. Drilling, construction, development and testing of each well shall be completed within fifty five (55) calendar days per well from the date of initiation of that specific well.

6.5.2 Should the Owner elect to drill additional wells without interruption, the Contractor shall have ten (10) calendar days for maintenance and moving the rig from site to site. The forty (45) day period for the drilling and testing of the following well shall commence upon the expiration of the ten (10) day moving period.

6.5.3 The Contractor shall pay to the Owner, seven hundred and fifty dollars ($750.00) as liquidated damages for each and every day required beyond the time allotted for the Project.

6.5.4 Once the Work has been initiated the Contractor shall remain active on the Project on a continuous basis until the Project is completed. Should the Contractor allow the Project to become inactive, the Owner has the right, in addition to and not in lieu of all other rights and remedies provided under the Contract Documents, to consider the contract forfeited by the Contractor. In the event of such election of forfeiture all monies owed the Contractor are also forfeited by the Contractor.

6.5.5 All liquidated damages shall be deducted from the contract price.

6.6 LIQUIDATED DAMAGES FOR NON-COMPLIANCE WITH THE CONTRACT DOCUMENTS

6.6.1 Non-compliance with the Contract Documents is defined as willful misinterpretation of the intent of the Contract Documents. Some examples of non-compliance with the Contract Documents are:

6.6.1.1 Required equipment not on site;

6.6.1.2 Equipment on site not meeting the requirements specified;

6.6.1.3 Required equipment on site but inoperative;

6.6.1.4 Specified methods or techniques not followed.

6.6.2 The Geologist-Engineer will notify the Contractor of non-compliance of each item in writing on the Non-Compliance Notification Form. The Contractor shall correct the deficiency within twenty four (24) hours.

6.6.3 Non-compliance with any item in the Specifications and Contract Documents following written notification by the Geologist-Engineer and the twenty four (24) hour correction period shall be subject to liquidated damages of two hundred and fifty (250) dollars per day per item.

6.6.4 All liquidated damages shall be deducted from the contract price.

6.7 LIQUIDATED DAMAGES FOR MISUSE OF GEOLOGIST-ENGINEER

6.7.1 The Geologist-Engineer is required to be present for the purpose of field inspection of the construction process and to inspect specific construction. It is the responsibility of the Contractor to notify the Geologist-Engineer of the timing of the Work. Should said notification be significantly incorrect, the Geologist-Engineer will

expend time of no value to the Owner or will not be present at required times for inspection. Blatant exploitation of the Geologist-Engineer by misleading notification of events will be documented in writing with one (1) copy given to the Contractor.

6.7.1.1 Should this misuse of the Geologist-Engineer occur, liquidated damages equal to the non-productive hours of the Geologist-Engineer times the hourly rate charged to the Owner, mileage, subsistence and expenses will be back charged to the Contractor.

6.7.2 Failure to return telephone calls from the rig, the field supervisor or other entities of the Contractor, to the Geologist-Engineer within one (1) hour constitutes misuse of the Geologist-Engineer;

6.7.2.1 Should this misuse of the Geologist-Engineer occur, liquidated damages of one hundred and fifty (150) dollars per non-returned telephone call will be back charged to the Contractor.

6.7.3 Written documentation of any misuse of the Geologist-Engineer will be delivered to the Contractor within twenty four (24) hours of the infraction.

6.8 ON SITE MATERIALS

6.8.1 At the pre-construction meeting, the Contractor shall present to the Geologist-Engineer a manifest listing the items and amount of all expendables stored on site, i.e. bentonite, biodegradable polymer, lost circulation materials, etc. This manifest is to be updated at each delivery of materials to the site and at each meeting of the Contractor, Owner and Geologist-Engineer. Any materials not on the manifest shall be removed by the Contractor at the request of the Geologist-Engineer.

PART VII TECHNICAL SPECIFICATIONS, DRILLING

PART VII TECHNICAL SPECIFICATIONS, DRILLING

7.1 PROJECT LOCATION

7.1.1 The location of the initial well to be constructed is:

7.1.1.1 SE¼, SE¼, SW¼ of Section 10, T. 19 N., R. 18 W.

7.1.2 The locations of all future wells will be selected in Sections 10 and 15 following the completion of testing of the initial well.

7.1.3 The initial well site is illustrated on Figure 1.

7.2 METHOD OF CONSTRUCTION

7.2.1 The well(s) shall be drilled by the reverse rotary drilling method.

7.3 CLEANING DRILL RIG

7.3.1 Prior to the initiation of drilling on each well, all bits, drill tubing and appurtenances extending into the well bore shall be steam cleaned for the purpose of eliminating contamination of iron bacteria.

7.3.2 The cleaning may be conducted in the shop or in the field.

7.4 INGRESS AND EGRESS

7.4.1 The Contractor shall grade the road(s) to the well site(s).

7.5 DRILLING WATER

7.5.1 Drilling water may be pumped from the well located at the NE¼, NE¼, NW¼ of Section 14, T. 19 N., R. 18 W.

7.5.2 The Contractor shall install a submersible pump and lay the necessary pipeline(s) to transport the water to the drill site(s).

7.5.3 The well has an eight (8) inch diameter casing installed to a depth of six hundred and forty four (644) feet. Although not reported, it is believed that the casing diameter may have reduced to six (6) inches below six hundred and forty four (644) feet to the total depth of the well, 1,010 feet. The static water level is reported to be six hundred and four (604) feet. It is suggested that the Contractor run a television scan of the well prior to the installation of a pump.

7.5.4 The Contractor shall inspect the property and determine the location of the pipeline.

7.6 MUD PITS, LAYOUT AND WASTE CONTROL

7.6.1 The Contractor shall construct all mud pits, layout and rigging required for the drilling program.

7.6.2 All drilling fluids, waste and drill cuttings shall be contained during the drilling program within the drill site area.

7.6.3 Upon completion of the drilling program the Contractor shall fill the mud pits and level the area in conformance with Item 5.16.

7.7 CONDUCTOR CASING

7.7.1 A thirty six (36) inch diameter or larger, 0.312 (5/16) inch or thicker wall thickness conductor pipe shall be emplaced and cemented to a depth of forty (40) feet (or deeper at the Contractor's option).

7.7.2 The conductor casing shall be installed in a forty six (46) inch or larger diameter bore hole.

7.7.3 The conductor pipe shall extend six (6) inches (or more) above the surface of the ground.

7.8 WELL BORE DIAMETER AND DEPTH

7.8.1 The well bore shall be drilled in two passes, a seventeen and one half (17.5) inch diameter pilot hole shall be drilled to the total target depth then reamed (opened) to a twenty eight (28) inch diameter bore.

7.8.2 The seventeen and one half (17.5) inch diameter pilot hole shall be drilled to a total depth of eighteen hundred (1,800) feet.

7.8.3 Following the analysis of the pilot hole data, the well bore shall be opened (reamed) to a diameter of twenty-eight (28) inches from forty (40) feet to the determined final depth. For bidding purposes, the total depth of the finished well will be twelve hundred (1,200) feet. The total depth of the well may be reduced or increased based upon the formations and materials encountered.

7.9 DRILLING FLUID

7.9.1 The drilling fluid system shall be clear water mixed with biodegradable, synthetic polymer (NL Industries E-Z Mud or equivalent). In respect to the synthetic polymer fluid system:

7.9.1.1 No other additives are to be added to the drilling fluid without the approval of the Geologist-Engineer. Such approval shall be written into the Driller's Daily Log and signed by the Geologist-Engineer;

7.9.1.2 The viscosity of the drilling fluid shall be maintained between 30 and 35 seconds per liter;

7.9.1.3 Should the drilling fluid parameters deviate from these specifications, drilling will be stopped, without compensation to the Contractor, until the drilling fluid conditions meet these specifications;

7.9.1.4 The viscosity and mud weight plus any other parameters tested shall be entered in the Driller's Daily Log once per tower or more often if measured;

7.9.1.5 These parameters may be adjusted upon approval of the Geologist-Engineer during the drilling program.

7.9.2 The drilling fluid shall be monitored by the Field Representative of the mud supplier when requested by the Geologist-Engineer.

7.10 DOWNHOLE LOGGING SUITE

7.10.1 Upon completion of the drilling of the pilot hole to the total target depth, the pilot hole shall be downhole logged with the following suite of logs.

7.10.1.1 self potential, 16 inch/64 inch normal and six (6) foot or longer lateral log;
7.10.1.2 caliper log;
7.10.1.3 sonic or velocity log;
7.10.1.4 USNRC Exempt log;
7.10.1.5 natural gamma log;
7.10.1.6 temperature log;
7.10.1.7 deviation log.

7.10.2 The Contractor shall order the downhole logging suite so as to properly coordinate the logging process; however, the Owner retains the right of distribution of the logs.

7.10.3 The Owner retains the right to eliminate the downhole logging suite at any time during the drilling program prior to the ordering of the service.

7.10.4 All logs are to be submitted to the Geologist-Engineer who will distribute the logs.

7.11 CASING STRING AND DIAMETER

7.11.1 The casing string shall consist of blank steel pipe and wire wrap well screen.

7.11.2 Blank steel pipe

7.11.2.1 The blank pipe shall be prime domestic or imported steel pipe conforming to or exceeding ASTM A-252 Grade II standards.

7.11.2.2 The casing diameter shall be eighteen (18) inch O.D. with a wall thickness of 0.312 (5/16) inch or heavier.

7.11.2.3 The ends of the casing shall be machined perpendicular to the longitudinal axis of the pipe.

7.11.2.4 The blank pipe shall extend from two (2) feet above ground surface to seven hundred (700) feet below the ground surface.

7.11.3 Wire wrapped well screen

7.11.3.1 The wire wrapped well screen shall be Roscoe Moss Well Screen or approved equal, with the following characteristics:

7.11.3.1.1 low carbon steel;

7.11.3.1.2 the wrap wire shall be triangular wire with a width of two hundred and fifteen thousandths (0.215) inches and an altitude of three hundred and twenty five thousandths (0.325) inches keystoned to the vertical rods;

7.11.3.1.3 there shall be seventy two (72) rods and each rod shall have a diameter of two hundred and eighty thousandths (0.280) inches for a total rod area of four and forty three hundreds (4.43) square inches;

7.11.3.1.3 the slot size shall be thirty thousandths (0.030) inches;

7.11.3.1.4 the tensile strength shall exceed one hundred and eighteen thousand six hundred and eighteen (118,618) pounds with a two (2) to one (1) safety factor of fifty four thousand three hundred and nine (54,309) pounds;

7.11.3.1.5 the collapse strength shall exceed one hundred sixteen and three tenths (116.3) pounds per square inch;

7.11.3.1.6 the screens shall be fitted with eight (8) inch by four (4) inch weld rings;

7.11.3.1.7 the screen shall be eighteen (18) inches in outside diameter.

7.11.3.2 The screen shall extend from seven hundred (700) feet to eleven hundred and eighty (1,180) feet below the ground surface.

7.11.4 The bottom of the casing string shall consist of twenty (20) feet of blank casing fitted with a bull nose cap extending the casing string to twelve hundred (1,200) feet.

7.11.5 The screen may be replaced with perforated casing at the option of the Owner, based upon the formations encountered in the drilling of the pilot hole.

7.11.6 The casing shall be centered in the well bore by use of spring steel centralizers located at two hundred (200) foot intervals with the uppermost centralizer located at a depth of one hundred (100) feet. This will require a minimum of six (6) sets of centralizers.

7.11.7 The casing shall be round and straight. Casing which is out of round and/or not straight shall be rejected and shall be replaced at the expense of the Contractor.

7.11.8 The casing shall be joined by welding performed by Certified Welders.

7.12 GRAVEL PACK AND CEMENT

7.12.1 The annulus shall be filled with Colorado Silica sand, a bentonite seal and cement.

7.12.2 Colorado Silica.

7.12.2.1 The silica sand shall be well rounded sand, size eight (8) - twelve (12).

7.12.2.2 The Contractor shall bring a sample of the gravel to the pre-construction conference.

7.12.2.3 The gravel shall fill the annulus from the bottom of the well bore to six hundred (600) feet below the ground surface.

7.12.2.4 The calculated volume of gravel to be installed in the annulus between the casing and the well bore is nine and sixty six hundreds (9.66) cubic yards per one hundred (100) lineal feet for a total of fifty seven and ninety six hundredths (57.96) cubic yards to fill the annulus from twelve hundred (1,200) feet to six hundred (600) feet.

7.12.2.5 Additional gravel is to be installed until the gravel is tagged at six hundred (600) feet.

7.12.2.6 The gravel shall be emplaced into the annular space between the casing and the surface casing by means of a positive action tremie pipe. The drill stem shall extend to the bottom of the casing and clear water shall be circulated at all times during the installation of the gravel pack. The tremie pipe is to be removed in twenty (20) foot sections as the annulus is filled.

7.12.2.7 At the Contractor's discretion, the Contractor may pour the gravel in the top. Should the Contractor take this election, the drill stem shall extend to the bottom of the casing and clear water shall be circulated at all times during the installation of the gravel pack. The gravel shall be tagged at fifty (50) foot intervals. In the event that the top of the gravel is above six hundred (600) feet and the minimum amount of fifty eight (58) cubic feet of gravel has not been installed, the well shall be considered defective and will not be accepted.

7.12.2.8 The gravel shall be on site and available for inspection by the Geologist prior to the spud-in of the well. Should the gravel delivered to the well site not conform to the specifications contained herein, it will be rejected. Should rejection occur, the Contractor is responsible for all lost time and the condition of the hole from rejection until gravel meeting the specifications is delivered to the well site.

7.12.3 Bentonite Seal

7.12.3.1 One (1) cubic yards of Bentonite pellets shall be installed to place a ten (10) foot seal from six hundred (600) feet to five hundred and ninety (590) feet.

7.12.4 Cement

7.12.4.1 The cement shall consist of twenty eight hundred (2,800) psi with additives for plasticity. The cement shall arrive with a slump of eight (8) inches. Water shall not be added at the delivery site.

7.12.4.2 The cement shall be installed through a tremie pipe by means of a positive action cement pump.

7.12.4.3 The tremie pipe shall initially extend to a minimum depth of five hundred seventy (570) feet. As the annulus is filled the tremie pipe will be removed in twenty (20) foot or less increments so that the bottom of the tremie pipe will be less than twenty (20) feet above the cement in the annulus at all times.

7.12.4.4 A minimum volume of fifty seven (57) yards of API Class A or B cement shall be installed in the annulus. Additional cement shall be added to bring the level of the cement in the annulus up to the ground surface.

7.12.4.5 During the installation of the cement:

7.12.4.5.1 the well bore and casing shall be kept full of drilling fluid.

7.12.4.5.2 the cement shall be emplaced in lifts of twenty (20) yards of concrete with a minimum setting time of six (6) hours between lifts.

7.13 DEVELOPMENT

7.13.1 Development of the well shall be by means of a jetting tool. The Geologist-Engineer shall approve the jetting tool before its use will be permitted.

7.13.2 Jetting shall be started at the bottom of the well and shall proceed upward.

7.13.3 The well shall be cleared of mud, sand and sediment when necessary during the development and shall be free of sediment to the full depth of the casing upon completion of the development. The total number of feet of sediment removed from the well shall be recorded in the log.

7.13.4 Jetting will continue for a minimum period of twelve (12) hours

7.14 DRILLING FLUID DISPERSION

7.14.1 Prior to development, Item 7.13, fifty (50) gallons of undiluted commercial sodium hypochlorite shall be introduced into the drilling fluid as it flows into the well bore to disperse the synthetic polymer.

7.15 PLUMBNESS AND ALIGNMENT

7.15.1 The well shall be plumb and straight.

7.15.2 The maximum variation of the longitudinal axis of the well from the vertical shall not exceed six (6) inches per one hundred (100) feet from the surface to the total depth of the well.

7.15.3 The longitudinal axis of the well shall be a minimum distance of three (3) inches from the casing wall at all points from the surface to the total depth of the well.

7.15.4 The sketch, Well Alignment Specifications, Figure 3, illustrates these requirements.

7.15.5 To test the plumbness and alignment, the Contractor in the presence of the Geologist-Engineer shall lower a forty (40) foot dummy with an outside diameter of seventeen (17) inches to the total depth of the well. Should this dummy not move freely to the total depth of the well, the limits of plumbness and alignment shall not have been met.

7.16 DOWNHOLE TELEVISION SCAN

7.16.1 Upon completion of the pump testing program, the well shall be scanned by means of a television camera.

7.17 REINFORCED CONCRETE PUMP FOUNDATION

7.17.1 The reinforced concrete pump foundation shall be constructed following completion of the development and pump testing program.

7.17.2 The surface casing shall be trimmed to three (3) inches below the ground surface with the landing clamps attached to the well casing resting on the surface casing.

7.17.3 The well casing shall extend eighteen (18) inches above the ground surface.

7.17.4 A four (4) inch diameter gravel tube shall extend down the annulus to a depth of six hundred and twenty (620) feet to allow additional gravel to be added to the gravel pack. This gravel feed tube should be installed prior to filling the annulus with cement.

7.17.5 The gravel tube should extend three (3) inches above the top of the finished reinforced concrete pump foundation. The top of the gravel tube shall be threaded and have a screw-type cap.

7.17.6 A two (2) inch diameter galvanized pipe with a tee and plug shall penetrate and be welded to the eighteen (18) inch diameter well casing at an acute angle to act as an air vent. The downward facing portion of the tee shall be screened with 16-mesh bronze screen. The tee shall be at least twenty-four (24) inches above the ground surface.

7.17.7 The area around the casing shall be excavated to a depth of six (6) inches below grade. Forms shall be constructed for a square pump foundation, seventy two (72) inches on a side and twelve (12) inches high (six (6) inches above grade).

7.17.8 The reinforced concrete pump foundation shall be centered on the centerline of the well casing and square with the property lines. Eight (8) pieces of one-half (½) inch diameter re-bar, seventy six (76) inches long, shall have six (6) inches at each end bent ninety (90) degrees so as to form legs. The re-bar shall be installed with two (2) pieces on each side of the casing and wired together at the cross points. The re-bar frame should stand six (6) inches above the bottom of excavation per Figure 4.

7.17.9 A pedestal extending six (6) inches above the top of the pump foundation footing shall be constructed around the well casing. The pedestal shall be thirty (30) inches on a side centered on the centerline of the well casing.

7.17.10 The cement shall be a 2,800 psi test mixture monolithically poured. Test cylinders may be requested. A minimum thickness of three (3) inches of cement shall cover all steel appurtenances. The cement shall be broom (rough) finished.

7.17.11 The Geologist-Engineer shall be informed so as to allow him to inspect the forms and appurtenances prior to the pouring of the cement.

7.17.12 Figure 4 illustrates the pump foundation.

7.18 FORMATION WATER TESTING

7.18.1 Formation water samples may be requested by the Geologist-Engineer during the drilling of the pilot hole.

7.18.2 Twenty (20) lineal feet of the bottom of the pilot bore hole shall be isolated by inserting a jetting tool on the end of the drill string, covering the jetting tool with twenty (20) feet of gravel followed by ten (10) feet of bentonite pellets.

7.18.3 The isolated formation shall then be jetted until the water becomes clear or at least satisfactory for a water sample to be collected.

7.18.4 The Geologist-Engineer shall be present during the jetting program, adjust the program as needed and to collect the water sample.

PART VIII TECHNICAL SPECIFICATIONS, TEST PUMPING

PART VIII PUMP TEST SPECIFICATIONS

8.1 EQUIPMENT

8.1.1 The Contractor shall furnish all the materials, equipment and labor necessary to conduct the test pumping in accordance with best practices.

8.1.1.1 The test pump shall be a deep well turbine with a variable speed power source capable of delivering from four hundred (400) to fifteen hundred (1,500) gallons per minute from a pumping level of eight (800) feet, or supplying the equivalent horsepower.

8.1.1.2 The pumping unit must have a clutch to allow surging the well.

8.1.1.3 The discharge assembly shall consist of:

8.1.1.3.1 twenty (20) or more feet of discharge pipe;

8.1.1.3.2 a gate valve to allow the application of back pressure, if required;

8.1.1.3.3 an orifice section and manometer tube capable of measuring from three hundred fifty (350) to sixteen hundred (1,600) or more gallons per minute (gpm);

8.1.1.3.4 a hose bib and a Rossen sand testing unit;

8.1.1.4 The Contractor shall install two (2) one (1) inch diameter pipe to be utilized as a sounder tube or airline and shall have immediately available two sounders and all required gauges, regulators, hoses, fittings, gas and tables to allow measurement of the water level. The gas utilized for pressurization shall be nitrogen.

8.1.1.5 It is the Contractor's responsibility to maintain water level measurement capability throughout the testing program.

8.2 PUMP SETTING

8.2.1 The pump shall be set at eight hundred and sixty (860) feet. The static water level is expected to be approximately six hundred (600) feet. The exact pump setting may be adjusted depending upon the exact static water level.

8.3 PROCEDURE

8.3.1 The well shall be developed and cleaned with the pump. This is expected to require a minimum of twenty four (24) hours.

8.3.1.1 Initially, the pump will be started at the minimum rate of discharge that the pump will allow. Pumping will alternate with periods of surging. When the discharge is relatively clean, the rate of discharge will be increased and the procedure will be repeated. There will be a series of steps to the maximum capacity of the pump and/or the well.

8.3.1.2 The time of development is dependent upon the rate of development and how clear the water from the discharge becomes.

8.3.1.3 The Geologist-Engineer will be present and direct the development.

8.3.2 The pump will then be shut down to allow the water level to return to the apparent static level. This is expected to require a minimum of twenty four (24) hours.

8.3.3 The well shall be pumped in a step test configuration. This is expected to require twenty four (24) hours. The procedure for the step test is:

8.3.3.1 Measure the static water level at one (1) hour prior to the start of pumping and just prior to the start of pumping. This will be done by the Geologist-Engineer.

8.3.3.2 Initiate the pumping at a discharge rate of four hundred (400) or less gpm.

8.3.3.3 Measure the pumping levels at the following intervals:

8.3.3.3.1 one (1) minute intervals for ten (10) minutes;

8.3.3.3.2 two (2) minute intervals for ten (10) minutes;

8.3.3.3.3 five (5) minute intervals for twenty (20) minutes;

8.3.3.3.4 ten (10) minute intervals for sixty (60) minutes;

8.3.3.3.5 thirty (30) minute intervals until the end of each step.

8.3.3.4 Increase the production in steps and repeat Item 8.3.3.3 for each step. The number of steps will be determined in the field by the Geologist-Engineer.

8.3.4 The pump will then be shut down to allow the water level to return to the static water level. This is expected to take approximately twenty four (24) hours.

8.3.5 The well shall be pumped in a constant discharge rate configuration for a period of at least seventy two (72) hours. The discharge rate for the constant discharge rate portion of the testing program will be determined based on the results of the step test data.

8.3.5.1 The procedure for the constant rate discharge test is:

8.3.5.1.1 Measure the static water level at one (1) hour prior to the start of pumping and just prior to the start of pumping. This will be done by the Geologist-Engineer;

8.3.5.1.2 Initiate the pumping at the selected discharge rate;

8.3.5.1.3 Measure the pumping levels at the following intervals:

8.3.5.1.3.1 one (1) minute intervals for ten (10) minutes;

8.3.5.1.3.2 two (2) minute intervals for ten (10) minutes;

8.3.5.1.3.3 five (5) minute intervals for twenty (20) minutes;

8.3.5.1.3.4 ten (10) minute intervals for sixty (60) minutes;

8.3.5.1.3.5 thirty (30) minute intervals for two hundred and forty (240) minutes;

8.3.5.1.3.6 one (1) hour intervals for twenty (20) hours;

8.3.5.1.3.7 two (2) hour intervals until the end of pumping.

8.3.6 Measurements of the recovery of the water level shall be made following the cessation of pumping. The recovery measurements will be taken by the Geologist-Engineer.

8.3.6.1 Measurement of the water levels during the recovery period shall be taken at the following intervals:

8.3.6.1.1 one (1) minute intervals for ten (10) minutes;

8.3.6.1.2 two (2) minute intervals for ten (10) minutes;

8.3.6.1.3 five (5) minute intervals for twenty (20) minutes;

8.3.6.1.4 ten (10) minute intervals for sixty (60) minutes;

8.3.6.1.5 thirty (30) minute intervals for two hundred and forty (240) minutes;

8.3.6.1.6 one (1) hour intervals to the end of recovery measurements.

8.3.6.2 The Geologist-Engineer shall determine the end of the measurement period of the recovery of the water level based on the decrease in the rate of recovery.

8.4 CHANGES IN PROCEDURE

8.4.1 The Geologist-Engineer will direct the test, making changes in the procedure as required by the conditions encountered during the test. The required changes are to be written by the Geologist-Engineer into the Contractor's log book. The length of run time for development and testing may vary. The exact length of each step or portion of the test will be determined by the Geologist-Engineer during the testing program.

8.4.2 The length of steps or portion of the test will be based on the change in pumping level over time, the trend of the pumping level and the constancy of rate of decline.

8.5 WASTE WATER

8.5.1 The discharge from the well testing program will be wasted into naturally occurring drainage washes on the property.

8.5.2 The Contractor should review the drainage areas during his field inspection of the site.

8.6 RECORDS

8.6.1 The Contractor shall keep a log of the pumping test, including:

8.6.1.1. the static water level;

8.6.1.2. thirty (30) minute readings of the

8.6.1.2.1 rate of production,

8.6.1.2.2 pumping levels;

8.6.1.3. time of

8.6.1.3.1 starting pump;

8.6.1.3.2 stopping pump;

8.6.1.3.3 any periods of down time.

PART IX FIGURES 1 - 4

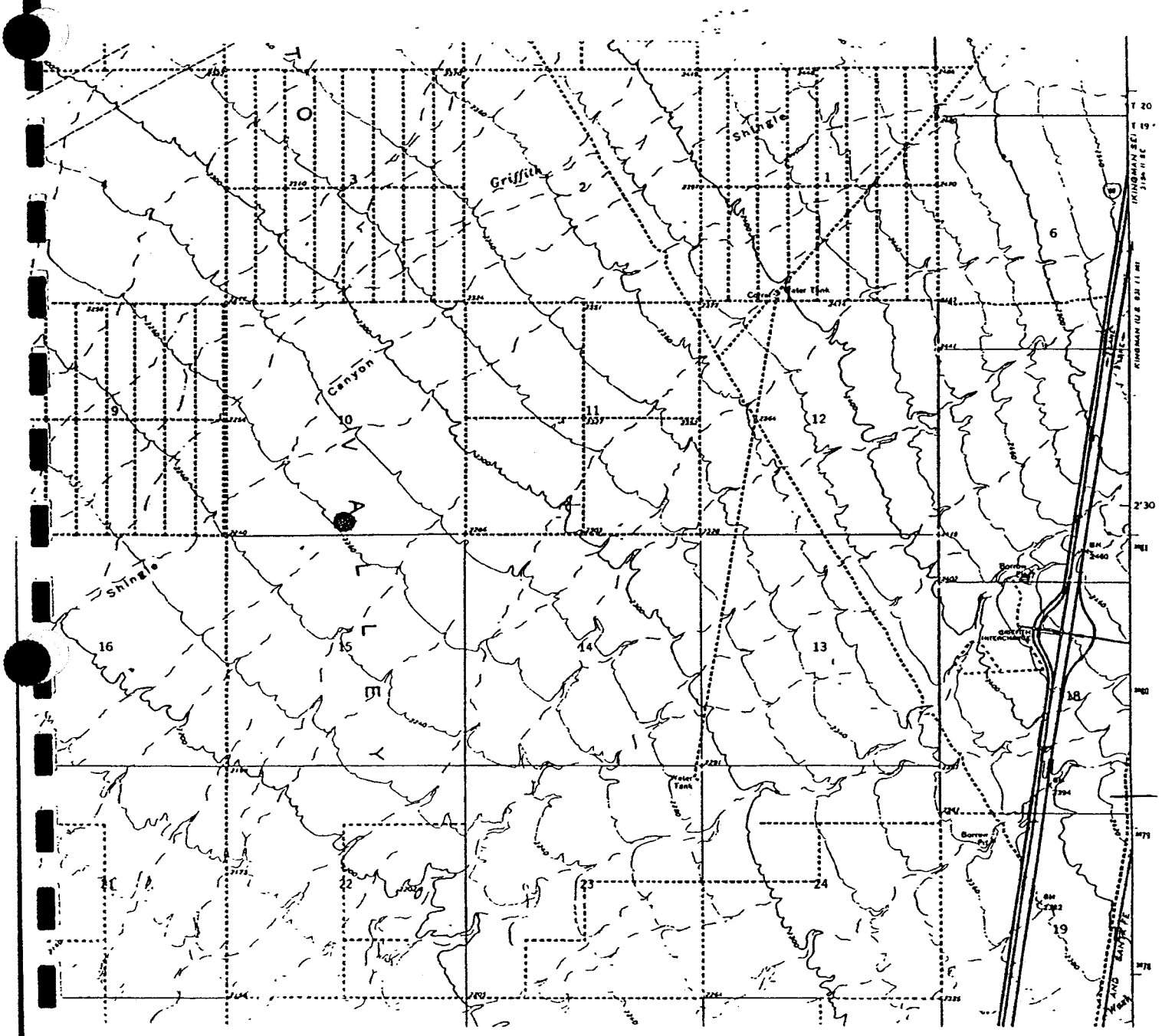

GRIFFITH ENERGY, L.L.C.

LOCATION OF WELL SITE

T. 19 N., R. 18 W.

FIGURE 1

MOHAVE-003

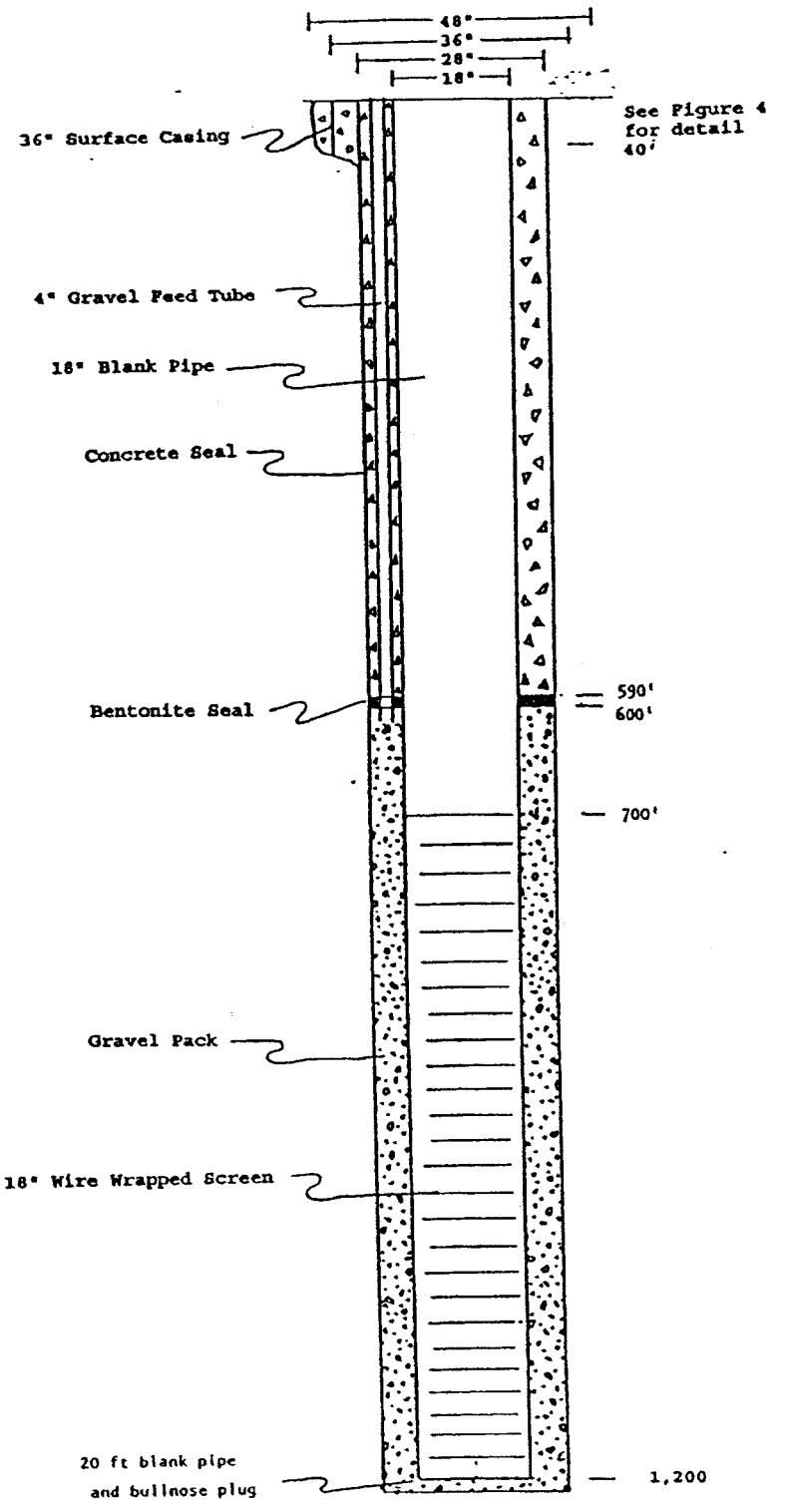

GRIFFITH ENERGY, L.L.C.

GENERALIZED WELL SCHEMATIC

FIGURE 2

MOHAVE-003

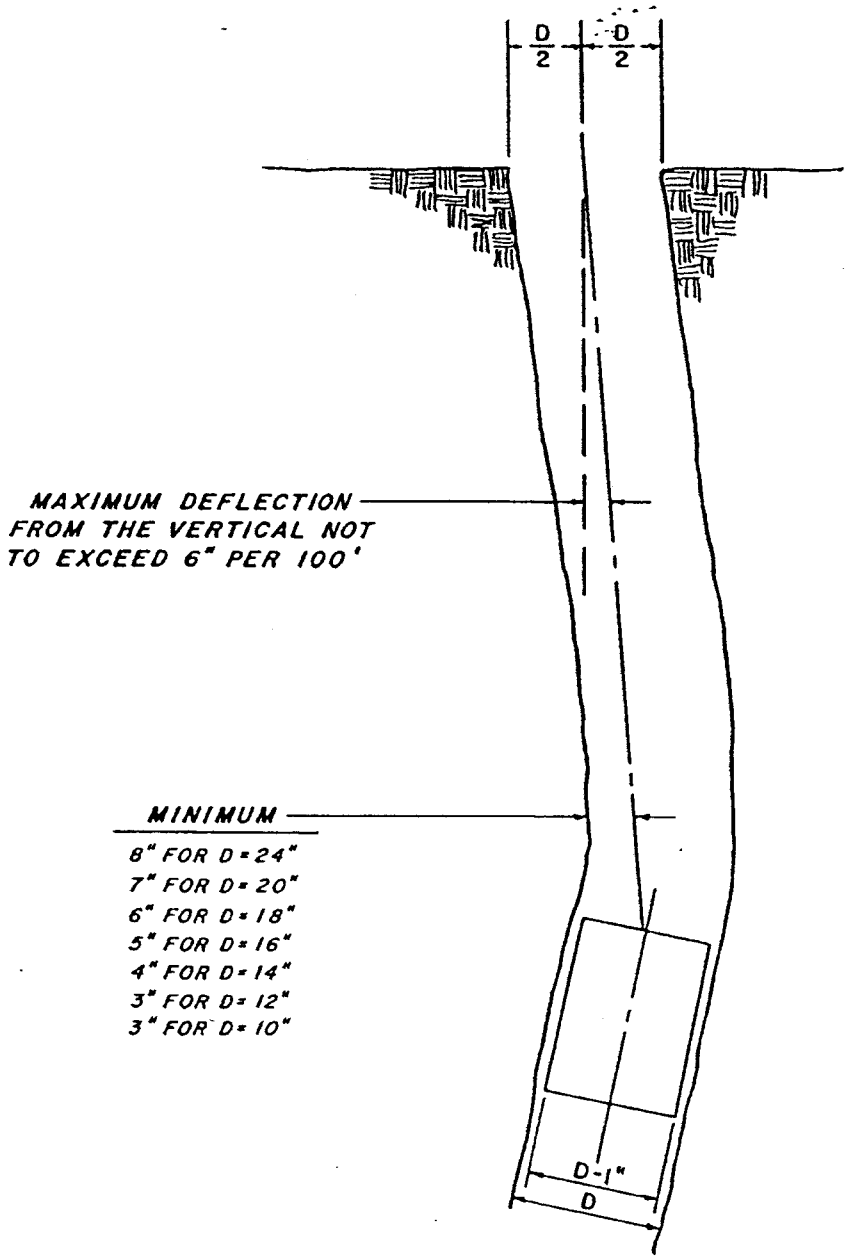

WELL ALIGNMENT SPECIFICATIONS

No Scale

MANERA, INC.

CERTIFICATE NO 6607 PHIL A. MANERA

MOHAVE COUNTY

FIGURE 3

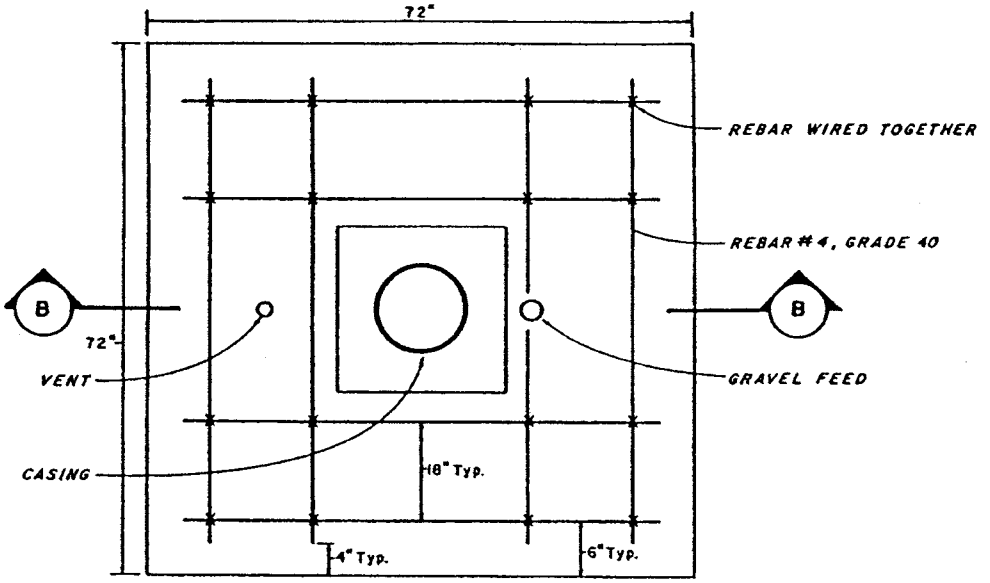

A TOP VIEW

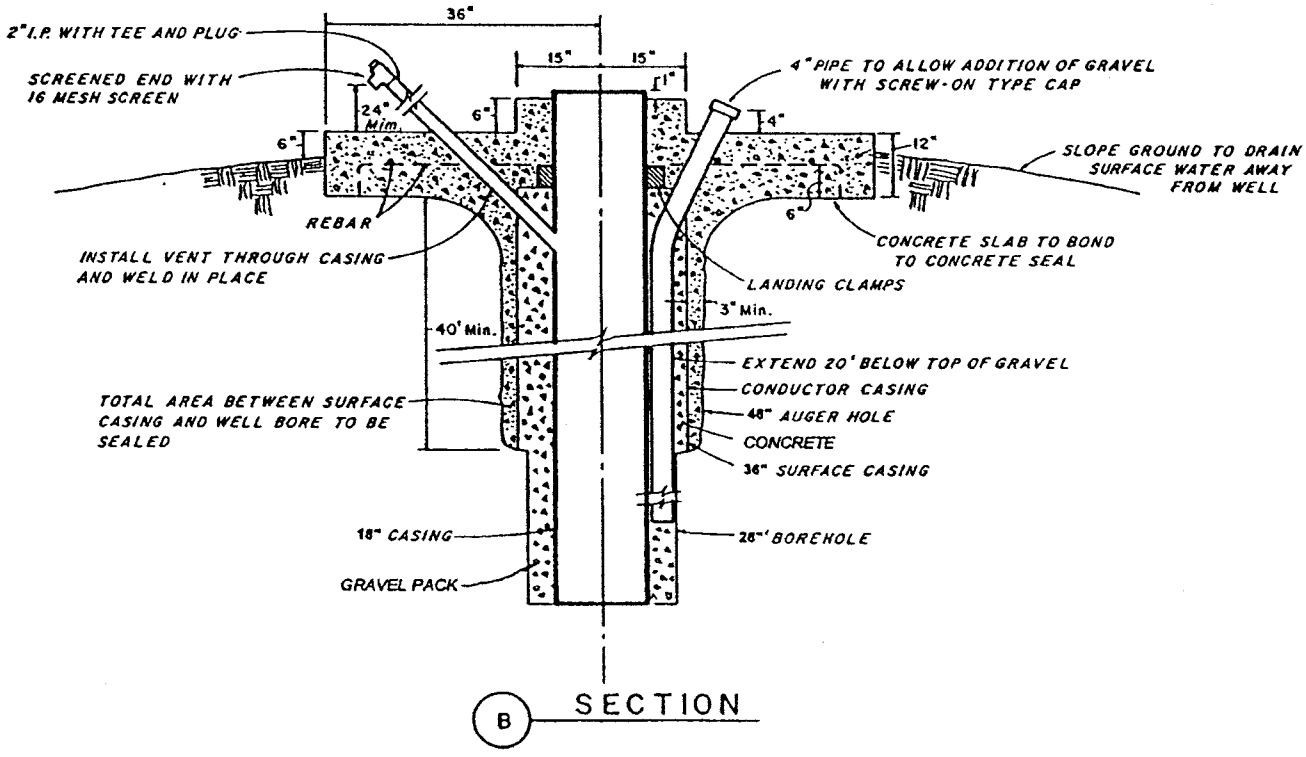

B SECTION

PUMP PAD DETAIL
GRAVEL PACKED WELL

NOT TO SCALE

MANERA, INC.

FIGURE 4

PART X WELL SCHEDULES AND LOGS

STATE OF ARIZONA
DEPARTMENT OF WATER RESOURCES
15 South 15th Avenue
Phoenix, Arizona 85007

WELL DRILLER REPORT

This report should be prepared by the driller in all detail and filed with the Department within 30 days following completion of the well.

1. Owner JOHN A. GIST
   Name
   5804 OATMAN ST. RT. KINGMAN, AZ. 86401
   Mailing Address
2. Driller PENROD DRILLING CO.
   Name
   3020 JAGERSON AVE. KINGMAN, AZ. 86401
   Mailing Address
3. Location of well: 19 N 18 W 5 NE/SE/NW
4. Permit No. 55 - 529616
   (If issued)

DESCRIPTION OF WELL

5. Total depth of hole 625 ft.
6. Type of casing STEEL
7. Diameter and length of casing 6 in. from 0 to 625. ____ in from ____ to ____.
8. Method of sealing at reduction points ____
9. Perforated from 545 to 615. from ____ to ____. from ____ to ____.
10. Size of cuts 1/8 X4 Number of cuts per foot 4
11. If screen was installed: Length ____ ft. Diam ____ in. Type ____
12. Method of construction DRILLED
    drilled, dug, driven, bored, jetted, etc
13. Date started 10 (Month) 1 (Day) 90 (Year)
14. Date completed 11 (Month) 15 (Day) 90 (Year)
15. Depth to water 513 ft. (If flowing well, so state)
16. Describe point from which depth measurements were made, and give sea-level elevation if available GROUND LEVEL
17. If flowing well, state method of flow regulation: ____
18. Remarks: ____

DO NOT WRITE

REG. No. 55-529616
B(19-18)5 BDA
File No. \
Entered ENTERED By

DWR-55-55-2/89

MOHAVE-003

LOG OF WELL

Indicate depth at which water was first encountered, and the depth and thickness of water bearing beds. If water is artesian, indicate depth at which encountered, and depth to which it rose in well.

From (feet)	To (feet)	Description of formation material
0	6	TOP SOIL
6	15	SAND, GRAVEL, SM. BOULDERS
15	24	SAND, GRAVEL, CLAY
24	30	SAND, GRAVEL
30	126	SILTY CLAY SM. GRAVEL
126	203	SILTY CLAY
203	220	SAND, GRAVEL CLAY
220	290	SILTY CLAY
290	301	SAND GRAVEL - SM BOULDERS
301	390	SILTY CLAY
390	445	SAND, GRAVEL, CLAY
445	513	GRAVEL, TOUGH CLAY
513	530	SAND - GRAVEL (WATER)
530	595	SMALL GRAVEL - TOUGH CLAY
595	625	SILTY CLAY - SMALL GRAVEL

I hereby certify that this well was drilled by me (or under my supervision), and that each and all statements herein contained are true to the best of my knowledge and belief.

Driller: PENROD DRILLING CO.
Name

3020 JAGERSON AVE
Address

KINGMAN, AZ. 86401
City State Zip

Date 12 - 5 1990

MOHAVE-003

STATE OF ARIZONA
DEPARTMENT OF WATER RESOURCES
99 EAST VIRGINIA AVENUE
PHOENIX, ARIZONA 85004

WELL DRILLER REPORT

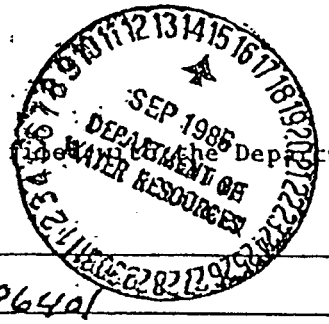

This report should be prepared by the driller in all detail and filed with the Department within 30 days following completion of the well.

1. Owner E R ELDEAN
Name
704 OAK ST. KINGMAN, ARIZ. 86401
Mailing Address

2. Driller PENROD Drilling Co. KINGMAN, ARIZ. 86401
Name

Mailing Address

3. Location of well: Twp 19N RGE 18W SEC 10 SE1/4 SE1/4 SE1/4

4. Permit No. (if issued) 55-513382

DESCRIPTION OF WELL

5. Total depth of hole 800 ft.

6. Type of casing STEEL

7. Diameter and length of casing 8 in. from 0 to 800, ____ in from ____ to ____.

8. Method of sealing at reduction points ____

9. Perforated from 630 to 790, from ____ to ____, from ____ to ____.

10. Size of cuts 3/16 Number of cuts per foot 6

11. If screen was installed: Length ____ ft. Diam ____ in. Type ____

12. Method of construction DRILLED
drilled, dug, driven, bored, jetted, etc.

13. Date started 3 / 86
Month Day Year

14. Date completed 3 23 86
Month Day Year

15. Depth to water 597 ft. (If flowing well, so state.)

16. Describe point from which depth measurements were made, and give sea-level elevation if available GROUND LEVEL

17. If flowing well, state method of flow regulation: ____

18. Remarks: ____

DO NOT WRITE IN THIS SPACE
OFFICE RECORD
Registration No. 55-513382
Received ____ By ____
Entered ____ By ____
File No. B(19-18)10 ddd

MOHAVE-003

DWR-55-6-Rev. 8/85

ENTERED SEP 22 1985

LOG OF WELL

Indicate depth at which water was first encountered, and the depth and thickness of water bearing beds. If water is artesian, indicate depth at which encountered, and depth to which it rose in well.

From (feet)	To (feet)	Description of formation material
0	8	TOP SOIL
8	12	CONGLOMERATE
12	68	CLAY GRAVEL & BOULDERS
68	121	SILTY CLAY
121	165	SAND GRAVEL & CLAY
165	257	SILTY CLAY COURCE SAND & GRAVEL
257	422	SILTY CLAY SMALL GRAVEL MIXED
422	435	SAND COURCE GRAVEL CLAY MIXED
435	442	SILTY CLAY
442	535	SAND COURSE GRAVEL & SOME CLAY
535	585	FINE SAND SMALL GRAVEL SOME CLAY
585	607	SAND & GRAVEL (WATER)
607	662	SAND GRAVEL & CLAY MIXED
662	698	WHITE BENTONITE
698	703	SAND GRAVEL CLAY MIXED
703	760	STICKY CLAY SMALL GRAVEL MIXED
760	800	SAND GRAVEL CLAY MIXED

I hereby certify that this well was drilled by me (or under my supervision), and that each and all of the statements herein contained are true to the best of my knowledge and belief.

Driller Pennel Drilling Co
Name

3020 Jagerson Ave.
Address

Kingman AZ 86401
City State Zip

Date 4-8-86

MOHAVE-003

ARIZONA DEPARTMENT OF WATER RESOURCES
500 North Third Street
Phoenix, Arizona 85004

WELL DRILLER REPORT

This report should be prepared by the driller in all detail and filed with the Department within 30 days following completion of the well.

RECEIVED
FEB 2 19

HOWARD PUMP, INC
PO BOX 1249
BARSTOW, CA 92312-1249

1. Owner Name: Citizens Utility
Address: P.O. box 20395 (Street) Bullhead City (City) AZ (State) 86439 (Zip)

3. Location: 19 (Township) N/S 18 (Range) E/W 14 (Section) ¼ ____ (10-acre) ¼ ____ (40-acre) ¼ ____ (160-acre)

4. Well Registration No. 55- 552633 (Required)

5. Permit No. ____ (If issued)

DESCRIPTION OF WELL

6. Total depth of hole 1010 ft.
7. Type of casing steel
8. Diameter and length of casing 8 1/16 in. from 0 to 644, in from 665 to 685
9. Method of sealing at reduction points 0 to 20. 8 sack cement
10. Perforated from 644 to 665, from 685 to 1007 from ____ to ____
11. Size of cuts .080 Number of cuts per foot 12
12. If screen was installed: Length 343 ft. Diam 8 in. Type milslot
13. Method of construction Direct Rotery (drilled, dug, driven, bored, jetted, etc)
14. Date started 10/29/95 (Month / Day / Year)
15. Date completed 10/30/95 (Month / Day / Year)
16. Depth to water 605 ft. (If flowing well, so state)
17. Describe point from which depth measurements were made, and give sea-level elevation if available
TOC
18. If flowing well, state method of flow regulation: ____
19. Remarks: ____

DO NOT WRITE IN THIS SPACE
OFFICE RECORD

Registration No. 55-552633
File No. B(19-18)14 BBC
Received ____ By ____
Entered ENTERED FEB By 1936 MOHAVE-003

WR-55-55-7/95 (Rev.)

LOG OF WELL

Indicate depth at which water was first encountered, and the depth and thickness of water bearing beds. If water is artesian, indicate depth at which encountered, and depth to which it rose in well.

From (feet)	To (feet)	Description of formation material
0	30	COBBLES, COURSE GRAVEL W/ FINE SAND
30	170	SILTY SAND & FINE, COBBLES , GRAVEL
170	635	RED ROCK CHIPS AND COBBLES. SILTY SAND, FINE SAND, GRAVEL, BLACK ROCK CHIPS
635	650	WHITE CLAY, W/GRVEL COURSE, SANDS, BLACK & RED ROCK CHIPS
650	701	TAN SILTY SANDS, GRAVEL 1/16, 1/8, BLAC ROCK CHIPS, FINE SAND
701	1010	RED & BLACK ROCK CHIPS, GRAVEL, FINE SANDS, W/ 60% SILTY SAND

I hereby certify that this well was drilled by me(or under my supervision), and that each and all statements herein contained are true to the best of my knowledge and belief.

Driller Name: Norm V.Howard

34550 Outer Highway 15
Street

Yermo, Ca. 92398 (619)254-3351
City State Zip Phone No.

Signature of Driller Date

MOHAVE-003

PRELIMINARY HYDROLOGIC EVALUATION

GRIFFITH ENERGY WELL FIELD

SACRAMENTO VALLEY, MOHAVE COUNTY, ARIZONA

MANERA INC.
8316 N. 53rd Street
Paradise Valley, AZ 85253

MOHAVE-003

INTRODUCTION

Location of the Griffith Energy Project

The proposed Griffith Energy Project (the "Project")is a natural gas-fired combined cycle electric generating facility to be located ten miles south of the City of Kingman, Mohave County, Arizona, approximately two miles north of the Interstate 40 Griffith interchange.

The proposed site is located on a 160 acre parcel of land (SW¼ of Section 6, T. 19 N., R. 17 W.) within the designated Mohave County I-40 Industrial Corridor. The Industrial Corridor is undeveloped in the vicinity of the Griffith Interchange with the exception of the Praxair industrial complex.

Scope and Purpose of the Study

The scope of this study is to evaluate the available geohydrological data for the purpose of generating a preliminary professional opinion outlining the ground water resources available for development in the area of study. This evaluation entailed determining:

- the hydrological characteristics of the aquifer;
- the movement of the ground water in the aquifer;
- the volume of ground water available in the area around Griffith, and;
- the probable impact of withdrawing ground water at a peak flow rate of 3,300 gpm and an annual average cumulative withdrawal of 3,060 acre feet per annum for consumption throughout the 40-year projected life of the Project.

Area of Study

The proposed location of the well field to withdraw ground water for the I -40 Industrial Corridor industrial complex, with specific emphasis on the development of a water supply for the Griffith Energy Project, comprises Sections 10, 11, 14 and 15, T. 19 N., R. 18 W., as shown on Figure 1.

To properly evaluate the area of the proposed well field, the area of investigation encompassed the northern portion of the Sacramento Valley, with the primary emphasis extending from the Project Site on the east to the Sacramento Wash on the west, and

from the Kingman -Oatman Road (Old Route 66) on the north to approximately six (6) miles south of Griffith on the south. These relationships can be seen on Figure 1.

Existing Wells

Two eight (8) inch diameter wells are present in the proposed well field:

- the MCEDA/Praxair well in the southeast corner of Section 10, drilled to a total depth of 800 feet, with a static water level below ground surface ("SWL") of 597 feet;

- the Citizens Utilities Company well in the NE Corner of NW 1/4 of section 14, T. 19 N. R. 18 W., drilled to a total depth of 1,010 feet, with SWL of 605 feet.

Both wells encountered water, and neither well penetrated the total thickness of the alluvial fill, proving the thickness of the alluvium exceeds 1,000 feet in the proposed well field area.

Neither well has been tested; however, the Praxair well is fitted with a pump which will deliver 160 gallons per minute. The Citizens Utilities well has not been equipped.

GEOHYDROLOGY

Geophysical Surveys

Seismic surveys (Gillespie and Bentley, 1971) and a number of electrical resistivity soundings (Turner, 1958, 1966; Manera, 1964, 1967) were made in the Sacramento Valley to measure the thickness of the alluvial deposits.

The seismic surveys conducted by the U. S. Geological Survey utilized conventional refraction methods.

The results of the seismic profile, depicted in Figure 2, run east - west approximately four miles north of the proposed Project well field area, as illustrated on Figure 1, and indicate that the alluvial basin near Griffith is approximately 32,000 feet wide and 4,400 feet deep. The seismic profile implies a sloped bottom to the basin rather than the step faulting that would more commonly be expected to occur.

Layers V_1 and V_2 are both considered to be alluvial fill, with layer V_1 inferred to be the dry portion of the alluvium and layer V_2 the saturated portion of the sediments. It is

believed that the water saturating the sediments causes the difference in the seismic velocity readings.

The electrical resistivity soundings indicate that the thickness of the saturated alluvial fill extends below the depth range limitations of the soundings, two thousand (2,000) feet, confirming the fact that the alluvial basins are relatively deep.

These surveys strongly suggest that the saturated thickness of the aquifer is well in excess of one thousand (1,000) feet. The limited drilling, however, has only penetrated the upper four hundred (400) feet of that saturated thickness at the north end of the basin, six hundred (600) feet in the Yucca area, and four hundred (400) feet under the proposed well field, where, in each case, adequate water for the needs of those respective wells was encountered without the need to drill deeper.

Geological Setting

The Sacramento Valley is a fault controlled, intermontane basin of the Basin and Range type of Fenneman (1931), located in the southwestern portion of Mohave County, Arizona. The basin is surrounded by adjacent block faulted mountains consisting of igneous and metamorphic rocks. The mountains forming the boundaries of the basin are the Cerbat Mountains to the northeast, the Hualapai Mountains to the southeast and the Black Mountains to the west.

The Sacramento Valley basin has historically been addressed by reference to three topographic portions, all hydrologically connected: the *northern portion*, locally called Golden Valley, extending from twelve (12) miles north of Highway 68 at the north to six (6) miles north of Yucca on the south; the *middle portion* extending from six (6) miles north of Yucca to the opening between the Black Mountains and Buck Mountain; and the *southern portion*, called Dutch Flat, extending twenty five (25) miles southeast from the opening between the Black Mountains and Buck Mountain; and. The outlet from the basin is through the opening between Buck Mountain and the Black Mountains, through the Franconia narrows extending west from the opening between the Black Mountains and an extension of the Mohave Mountains. These relationships can be seen on Figure 1.

The Sacramento Valley basin was formed in a period of faulting during which blocks of rocks were uplifted and tilted, leaving intervening basins. The blocks between the predominantly northwest - southeast trending faults were not all uplifted an equal amount, thus the basin bottoms and sides are probably a series of stair-step fault blocks. Secondary, northeast - southwest, trending faulting and uplift during this period of movement further complicated the structure of the basins by the formation of deeper to shallower sub-basins within the major basin, causing the width of the basin to vary along the length of the basin. Following and during the structural deformation, erosion from

the uplifted blocks and the extrusion of volcanic materials filled the basins with alluvial fill consisting of sands, clays and gravels of sedimentary origin, and tuffs, clays and rocks of volcanic origin.

The geological interpretation of the seismic profiles and electrical resistivity soundings completed in the basin, coupled with the data from Driller's logs of wells drilled in the basin, indicate that the basin is sub-divided into a broad, deep sub-basin (4,400 feet) under the Golden Valley (northern) portion of the basin and a broad, deep sub-basin (greater than 2,000 feet) under the Dutch Flat (southeastern) extension of the basin, separated by a narrower throat at Yucca where the basin is partially filled with a ridge of volcanic rocks appearing, based on limited data at this time, to be non-water-bearing, but covered by layers of alluvial fill ranging in thickness from six hundred (600) feet to more than one thousand (1,000) feet.

The estimated width of the basin aquifer, based on the various data sets available, appears to be:

Golden Valley	- 9 miles or 47,500 feet
Griffith Area	- 6 miles or 32,000 feet
Yucca Area	- 4 miles or 20,000 feet
Dutch Flat	- 8 miles or 42,000 feet
Franconia area	- 2.65 miles or 14,000 feet

The proposed well field would be located in the southern half of the northern (Golden Valley) sub-basin.

Withdrawal from the Aquifer

Prior to 1965, ground water withdrawals from the Sacramento Valley were limited to a few acre feet per year from relatively shallow private wells. In the early 1960's the Duval Copper Company developed the well field now owned and operated by the Cyprus Company for use at the Mineral Park Mine. During the period from 1964 to 1980, an average of 5,645 acre feet per year of water was withdrawn from the Golden Valley portion of the basin aquifer. In 1981, because of scaled back mining operations and consequent reduced water demand, the volume of withdrawal was reduced to 1,935 acre feet per year; and in 1986 the rate of withdrawal was further reduced to five hundred (500) to seven hundred (700) acre feet per year, still primarily for use in the Mineral Park Mine operation (Rascona, 1991).

Currently, withdrawals from the aquifer of the Sacramento Valley are concentrated in two (2) general areas:

- The Golden Valley area had a demand of twelve hundred fifty eight (1,258) acre feet per year in 1990 and is projected to grow to a demand of thirty two hundred forty (3,240) acre feet per year in 2040 (Arizona Department of Water Resources [ADWR], Staff Report, 1994). In addition, ADWR projects that the Cyprus Mineral Park withdrawal, within the Golden Valley portion of the basin, will approach eight hundred (800) acre feet per year for the period 1994 - 2009. This projected volume of withdrawal by Cyprus has not been met during the period 1994 -1998, however. After 2009, the Cyprus Mineral Park operation and ground water withdrawal is expected to be terminated.

- The Yucca area, including the Ford Proving Ground facility and related uses in Yucca, has an estimated withdrawal of one hundred fifty (150) acre feet per year (Miller, 1969).

Little additional withdrawal from the ground water aquifer has been initiated since 1994.

Aquifer Characteristics

The two aquifer characteristics of importance are:

- the specific yield (SY) which is the volume of water that will drain from a unit of a water table aquifer under the force of gravity, stated as a percent of the total volume of the unit; and,

- the transmissivity (T), a measure of the ability of the aquifer to transmit water, expressed in gallons per foot per day.

The specific yield (SY) is an elusive parameter that can only be estimated from observable data, such as the type and shape of the drill cuttings, the homogeneity of the materials in the cuttings, etc. As a result of the conservative nature of most consultants in the field of hydrology, published estimates of specific yield are almost always smaller than the actual field parameters. The transmissivity, on the other hand, can be calculated from the data collected during a properly conducted pumping test or estimated from pumping data; therefore, this value more nearly approaches the actual field value. Although both parameters are not exact, the values are useful in approximating the reaction of the aquifer to the stress of withdrawal.

Transmissivity

Transmissivity (T), the hydrologic conductivity of a unit cross-sectional area of the aquifer, is calculated from properly formatted pumping test data. In the event that the pumping test data is insufficient to calculate the T, or if no test data are available, the value of T can be estimated by multiplying the specific capacity of a well (yield divided

by the drawdown) by a coefficient determined from wells for which both specific capacity and transmissivity data were available. This coefficient of proportionality for the Sacramento Valley has been calculated to be 4,400 (Gillespie and Bentley, 1971).

T values ranging from 29,000 gallons per day per foot (gpd/ft) to 37,000 gpd/ft have been calculated or estimated in three wells in the northern portion of the Sacramento Valley (Golden Valley Well No.1, and Cyprus Well No.s 4 and 5). Although there are wells with lower values of T in the northernmost part of the aquifer near the mountain fronts, it can be fairly estimated that typical wells in the center of this portion of the basin will have similar aquifer transmissivity characteristics to those stated above. Therefore, using an average T value of 35,000 gpd/ft for the northern portion of the basin appears reasonable for this report.

A deep well and a moderately deep well are present in the middle portion of the basin in the Yucca area. Neither Driller's log indicated that the well penetrated the complete thickness of the aquifer. The deep well (1000 feet) has an estimated value of T of 120,000 gpd/ft while the moderately deep well (600 feet) has an estimated T value of 26,000 gpd/ft. A T value of 40,000 gpd/ft appears to be a reasonable value for the middle portion of the basin.

Well data is not available for the Dutch Flat portion of the basin.

Based on the present data, it appears that the value of T increases from 35,000 gpd/ft in the northern part of the basin to more than 40,000 gpd/ft in the middle part of the basin.

Using an average value of T = 35,000 gpd/ft for further calculations is believed to be conservative, and would produce computations falling within or below the range of conditions actually occurring in the aquifer throughout the northern and middle portions of the basin. It is expected that the actual field transmissivity will be greater than 35,000 gpd/ft, consequently the actual drawdown impacts that would occur in the aquifer due to the proposed Project, will be less than the projected impacts set forth in this study.

Specific Yield

The specific yield has been estimated as ten (10) percent (Gillespie and Bentley, 1971) and fifteen (15) percent (Turner, 1966). Todd (1980) states that the specific yield of materials range from eight (8) percent for silt up to twenty eight (28) percent for fine grained sand. As the estimate of ten (10) percent by Gillespie and Bentley (1971) falls near the lower end of the range described by Todd (1980), it is believed to be conservative and would produce computations falling within or below the range of conditions actually occurring in the aquifer of the basin.

Water Levels and Slope of the Water Level

Three historical water level maps have been published, 1971 (Gillespie and Bentley), 1979 (Pfaff and Clay) and 1991 (Rascona). Comparison of these three sets of data illustrates three significant conclusions:

- there are virtually no changes in the water levels or the slope of the water levels south of the Kingman - Oatman Road (the proposed area of withdrawal) during the period of recorded data, 1971 -1990;

- a cone of depression was established in the Golden Valley (northern) portion of the aquifer by the withdrawal of 102,000 acre feet of water from the Mineral Park Mine well field during the period 1971 -1994; and,

- the Mineral Park cone of depression is rapidly recovering and has shrunk significantly during the period 1981 - 1998 as a result of the substantial reduction in the rate of withdrawal from the Mineral Park Mine well field, even though other withdrawals have been initiated in the Golden Valley area.

Subsurface Flow and Outflow From the Basin

The subsurface flow of ground water in the aquifer can be calculated by the formula v = TiL, where:

v = volume of flow in gallons per day
T = transmissivity in gpd/ft
i = slope of the water table in feet/foot
L = length of the cross - sectional area of flow in feet;

then the flow of ground water from the northern portion of the basin through the Yucca narrows area when:

i = 250 / 63,360 = .0039 feet per foot

T = 35,000 gpd/ft

L = 20,000 feet

is:

v = 35,000 x .0039 x 20,000 = 2,730,000 gpd

2,730,000 / 325,851 = 8.378 acre feet per day

8.378 x 365 = 3,058 acre feet per year.

And using the water level contours of Rascona (1991), Plate 1, the total subsurface outflow of both the northern part of the basin (Golden Valley) and the southern part of the basin (Dutch Flat) through Franconia narrows is calculated to be:

i = 250 / 55,000 = .0091 feet per foot;
(1,300 foot contour to 800 foot contour)

T = 35,000 gpd/ft;

L = 14,000 feet;

then:

v = 35,000 x .0091 x 14,000 = 3,882,000 gpd/ft

3,882,000 / 325,851 = 11.73 acre feet per day

11.73 x 365 = 4,281 acre feet per year.

The calculated outflow of 4,281 acre feet per year based on Rascona's data essentially agrees with the estimated outflow of 4,000 acre feet using the data and calculations of Gillespie and Bentley (1971).

Storage

Gillespie and Bentley (1971) calculated a minimum of 6.5 million acre feet of ground water in storage in the Sacramento Valley aquifer *above 1,500 feet below the surface* and implied that the volume might be twice this minimum amount, or 13 million acre feet.

The Arizona Department of Water Resources (ADWR Staff Report, 1994) estimates the volume of water in storage in the aquifer north of Yucca, *above 1,200 feet below the land surface*, to be 2.3 million acre feet. Considering that ADWR used roughly only seventy five (75) percent of the lateral extent of the saturated aquifer (i.e., only the Golden Valley portion of the aquifer) and only one half the thickness of the aquifer utilized by Gillespie and Bentley, the *minimum* estimates of storage of Gillespie and Bentley and that of the ADWR are remarkably close; however, the actual volume of

storage is significantly higher than these estimates if Gillespie and Bentley's *higher* estimate of 13 million acre feet is correct.

Impact of Withdrawal from the Ground Water Aquifer

Griffith Energy LLC/Mayes (1998) stated that the peak flow demand for water for all uses at the Griffith Energy Project would be approximately 3,300 gallons per minute. The year-round expected operating profile projected for the Plant, accounting for projected percentages of base-load operating hours (normal flow demand), maximum output operating hours (peak flow demand), and maintenance and other non-operating hours (minimal flow demand), adjusted for monthly differentials of ambient air temperature and humidity, indicates an actual aggregate annual water requirement of approximately 3,060 acre feet per annum. (Griffith Energy Operations Profile, 1998).

The impact of the proposed withdrawal for a period of forty (40) years was calculated using the simulation model THWells, version 4.01 (van der Heijde, 1996). The calculations of total drawdown are based on the Theis equation for non - steady state flow in an isotropic, homogeneous confined aquifer of infinite extent. The model can be reliably used for water table aquifers, provided the calculated drawdowns are less than half the thickness of the saturated aquifer and a correction factor is applied. In this case, boundary conditions located four and one half (4.5) miles on either side of the well field were simulated using image wells.

For the most conservative analysis, we have assumed a *worst case hypothetical* of maximum peak flow continuously, year-round, which would pump 5323 acre feet.

Simulating a well field of six (6) wells, three (3) wells by two (2) wells, with a spacing of two thousand (2,000) feet between wells, with a continuous withdrawal of 792,000 gallons per day per well for a period of forty (40) years, and including boundary conditions (reflecting the worst case scenario of lateral aquifer extent and continuous peak pumping) gave a calculated maximum drawdown of one hundred and nine and one half (109.5) feet in the pumped wells and a drawdown of less than eighty (80) feet at a radius of one thousand (1,000) feet from the well field.

This projected volume of withdrawal, *which assumes the maximum peak flow demand were pumped continuously for forty (40) years,* would remove 213,000 acre feet from the minimum estimate of 2.3 million acre feet (ADWR, 1994) in storage. This is without considering any of the significant natural recharge to the aquifer that is clearly evidenced by the near-static condition of wells under current withdrawals and the recovery of the Mineral Park Mine cone of depression.

The more realistic projection, however, using the same model and calculations, but with demand figures from the projected actual operating profile and resulting reduced aggregate annual water demand of 3,060 acre feet, but still using assumed worst case

boundary conditions, gave a calculated most-likely-case drawdown of 70 feet at the well field, and 40 feet at a radius of one thousand (1,000) feet from the well field. Figures 3, 4, 5 and 6 reflect these two cases, respectively.

Water Quality and Temperature

The results of inorganic chemical analyses of water from Golden Valley Wells 1 and 2, in the northern end of the basin, show a total dissolved solids content of 250 and 280 milligrams per liter (mg/l) respectively. Similar analyses of waters collected at depths of seven hundred (700) feet and nine hundred (900) feet during the drilling program of a test well at Yucca, in the middle portion of the basin, show a total dissolved solids content of 300 mg/l. The results of partial chemical analysis of the Praxair well fall within these parameters. Thus, it appears that the ground waters withdrawn in the proposed well field will fall within the range of 250 mg/l to 300 mg/l.

There have been reports of a more highly mineralized water in the northeastern portion of the basin near the areas being mined in the Cerbat Mountains.

The temperature of the waters from wells in the northern portion of the Sacramento Valley basin were measured at 102 degrees F. in 1991. Reported temperature of the waters from the Praxair well in the southeast corner of Section 10, T. 19 N., R. 18 W. was greater than 102 degrees F. (Lindstrom, 1998) It appears that the waters in the aquifer are above normal temperature for the depths of the aquifer. Thus, it is expected that waters withdrawn from the aquifer in the proposed well field will fall in the temperature range of 102 degrees F. to 105 degrees F.

CONCLUSIONS

The conclusions reached on the basis of the available data are:

- The probability of developing wells capable of yielding between five hundred (500) and eight hundred (800) gallons per minute within the proposed well field (Sections 10 and 15, T. 19 N., R. 18 W.) approaches the ninety eight (98) percent confidence level.

- The capability of withdrawing 5,323 acre feet per year (worst case hypothetical demand) from the ground water reservoir under the proposed well field for a period of forty (40) years appears almost certain; and the projected *actual* demand of 3,060 acre feet per year, virtually certain.

- The probable impact of the *worst case hypothetical* volume of withdrawal for the period of forty (40) years would result in an increase in the pumping depth of one hundred and ten (110) feet in the well field for the Project (approximately a seven hundred foot pumping level) and an eighty (80) foot lowering of the water level one thousand (1,000) feet from the well field. Such a forty (40) year cumulative withdrawal of 213,000 acre feet would constitute nine and one fourth (9.25) percent of the minimum estimate of the 2.3 million acre feet of water in storage in the Golden Valley portion of the Sacramento Valley.

- The probable impact of the *most likely case* volume of cumulative withdrawal for the period of forty (40) years would result in an increase in the pumping depth of sixty (60) feet at the well field for the Project, and a forty-five (45) feet lowering of the water level one thousand (1,000) feet from the well field. And the corresponding forty (40) year withdrawal of 122,400 acre feet would be 5.32% of the minimum aquifer storage estimate.

- The probable water temperature of the water drawn from the ground water reservoir will be in the neighborhood of 102 degrees F.

- The probable total dissolved solids content of the water drawn from the ground water reservoir will approach 300 milligram per liter.

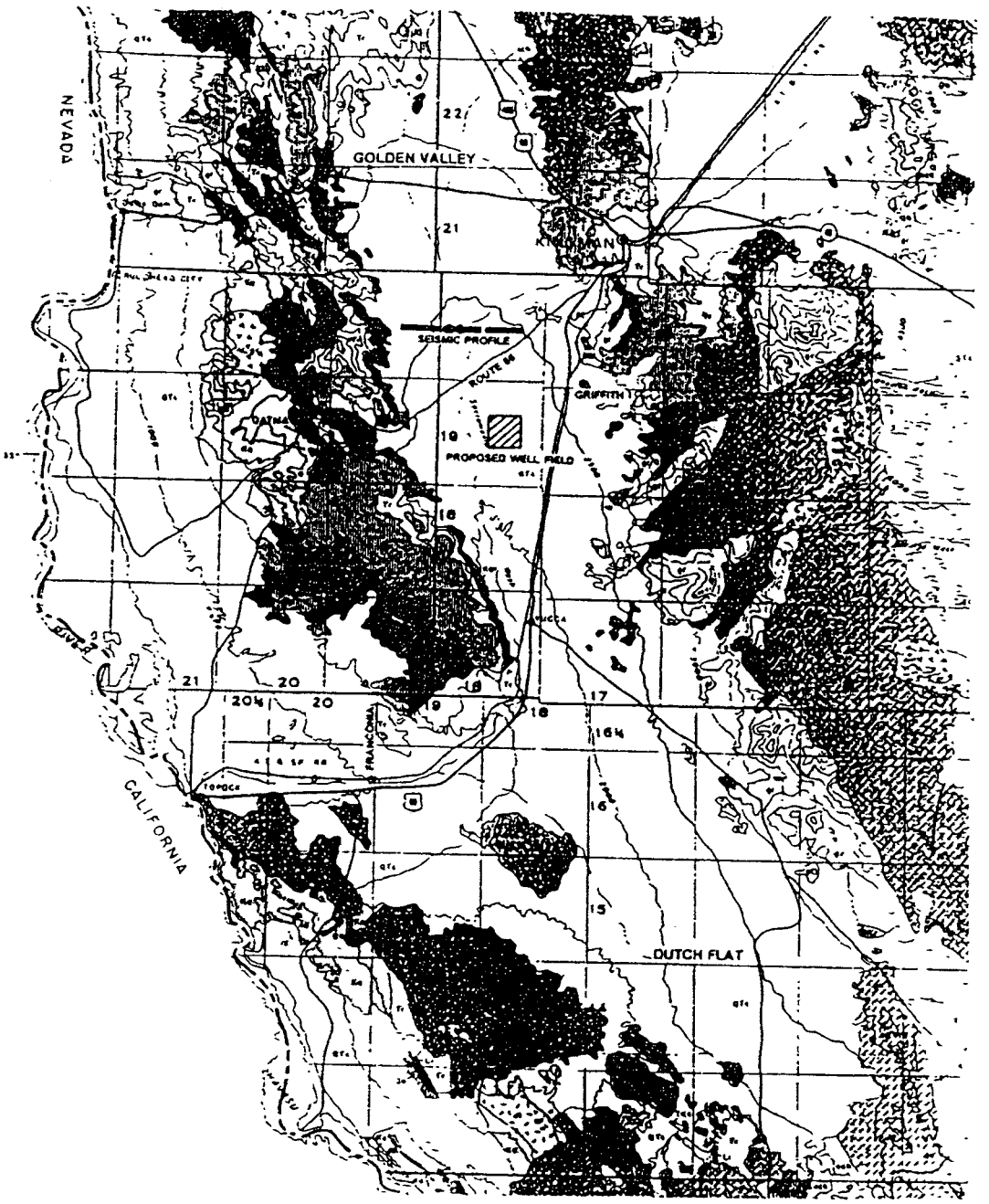

GRIFFITH ENERGY PROJECT

MAP SHOWING THE

SACRAMENTO VALLEY AND SUBDIVISIONS,

PROPOSED WELL FIELD

AND SEISMIC PROFILE LOCATION

Taken from
Mohave County Geologic Map

FIGURE 1
MOHAVE-003

MOHAVE-003

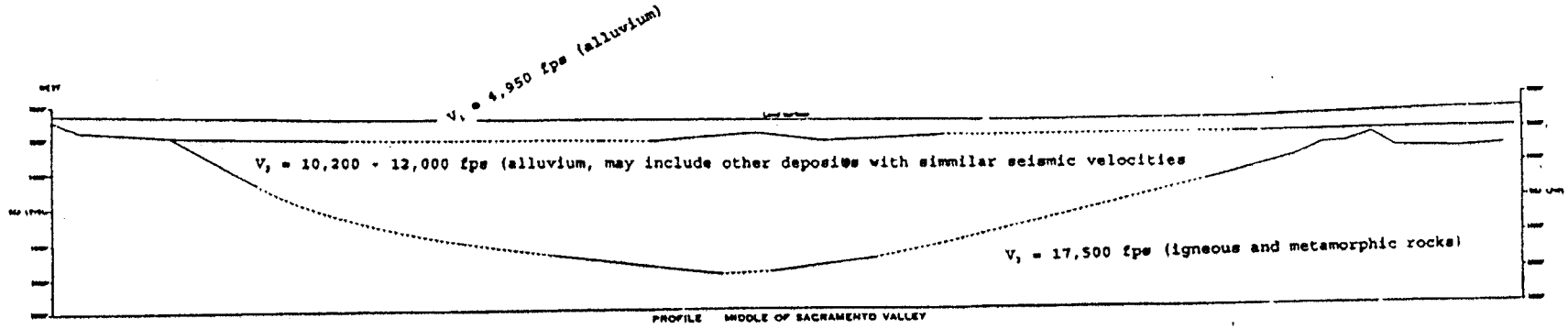

ANALYSIS OF SEISMIC PROFILE ACROSS SACRAMENTO VALLEY, FOUR MILES NORTH OF GRIFFITH, MOHAVE COUNTY, ARIZONA

Taken from USGS Water Supply Paper 1899-H

Seismology modified from R. H. Godson, Branch of Astrogeology, USGS, 1966

FIGURE 2

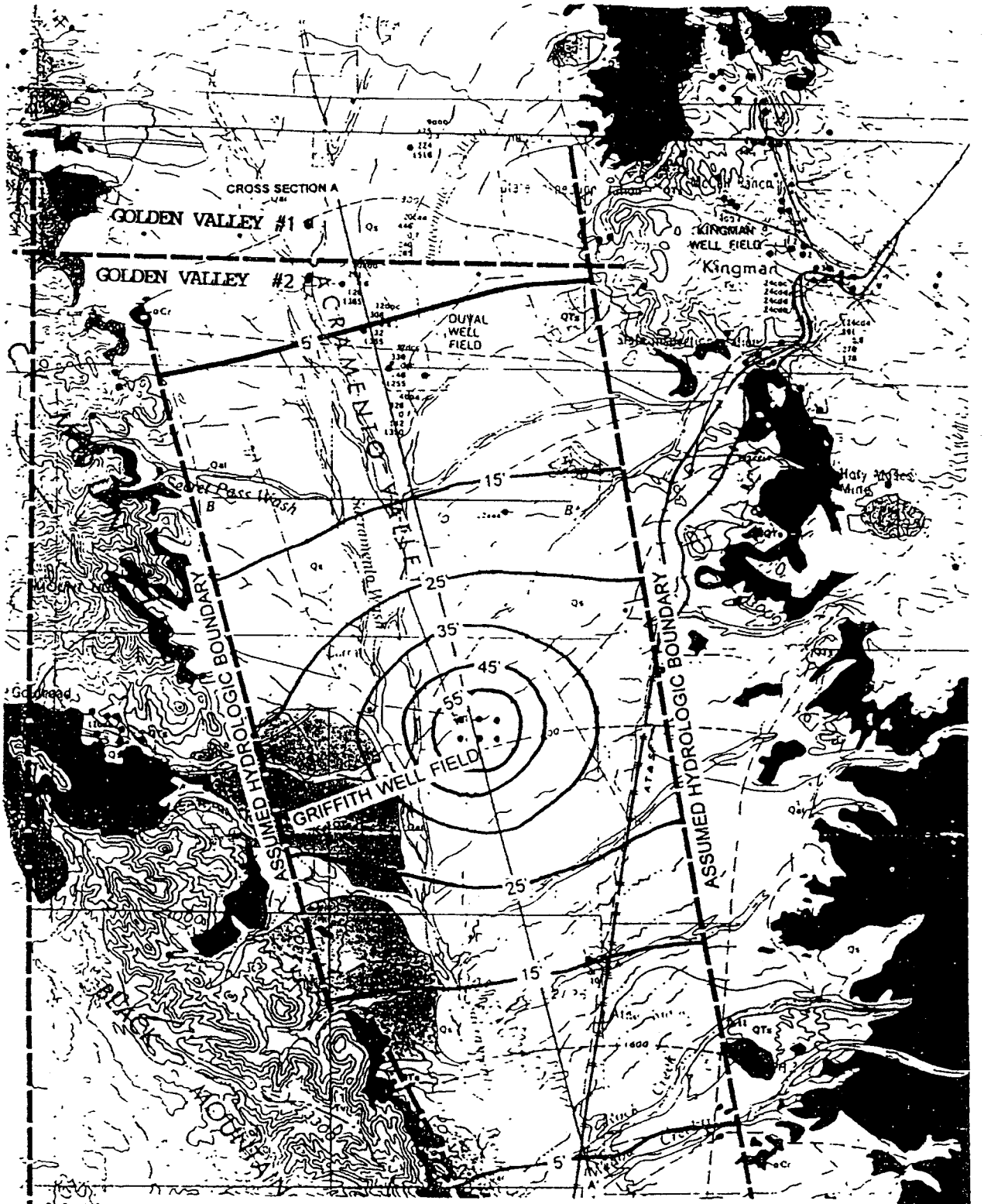

GRIFFITH ENERGY

PROJECTED WATER LEVEL DECLINES AFTER

FORTY (40) YEARS OF WITHDRAWAL

AT THE RATE OF 792,000 GPD PER WELL, SIX (6) WELLS

BASED ON ESTIMATED AQUIFER PARAMETERS

MOHAVE-003
Figure 3

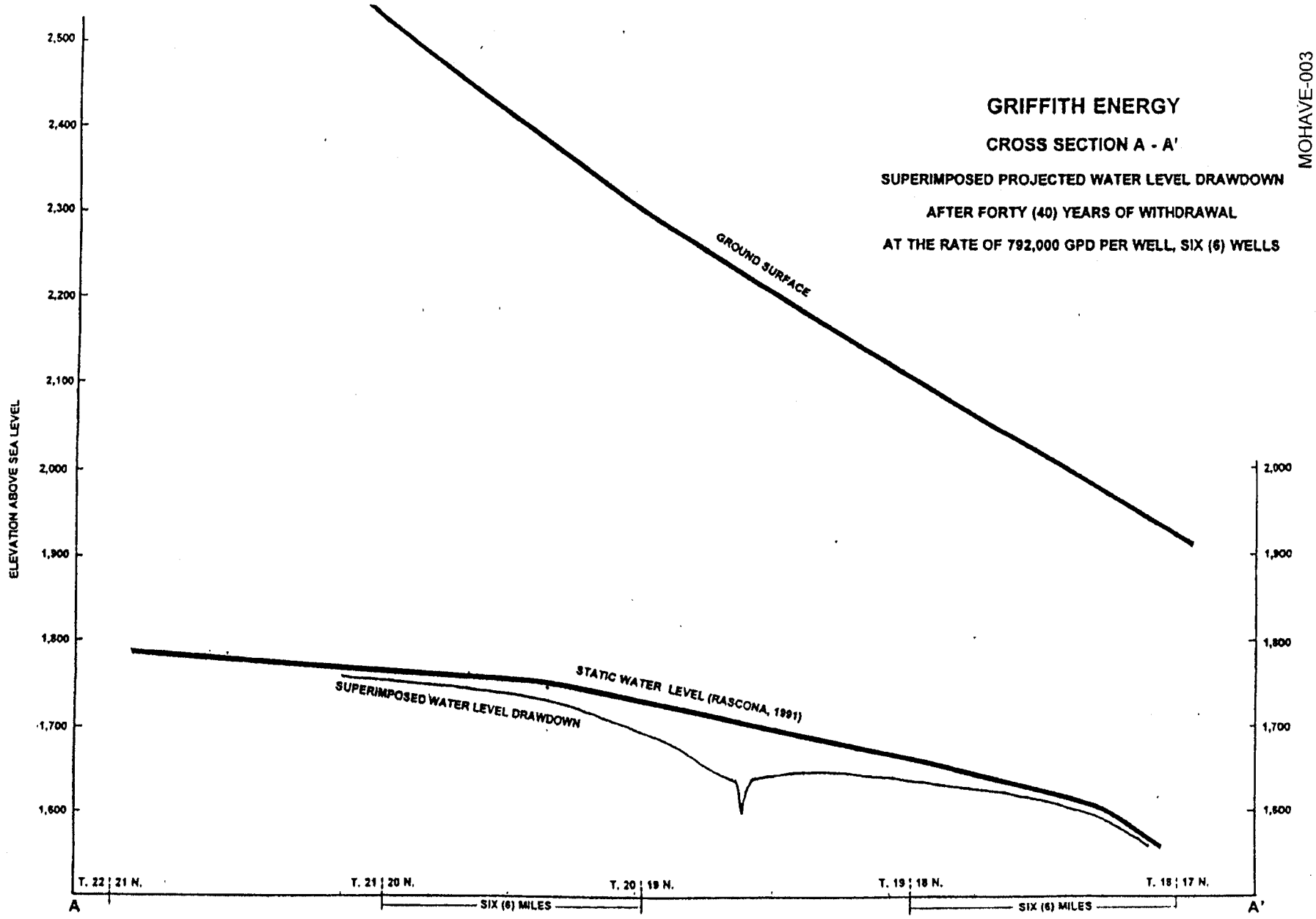
GRIFFITH ENERGY
CROSS SECTION A - A'
SUPERIMPOSED PROJECTED WATER LEVEL DRAWDOWN
AFTER FORTY (40) YEARS OF WITHDRAWAL
AT THE RATE OF 792,000 GPD PER WELL, SIX (6) WELLS
MOHAVE-003
ELEVATION ABOVE SEA LEVEL
2,500
2,400
2,300
2,200
2,100
2,000
1,900
1,800
1,700
1,600
GROUND SURFACE
STATIC WATER LEVEL (RASCONA, 1991)
SUPERIMPOSED WATER LEVEL DRAWDOWN
T. 22 | 21 N.
T. 21 | 20 N.
T. 20 | 19 N.
T. 19 | 18 N.
T. 18 | 17 N.
SIX (6) MILES
SIX (6) MILES
A
A'

Figure 4

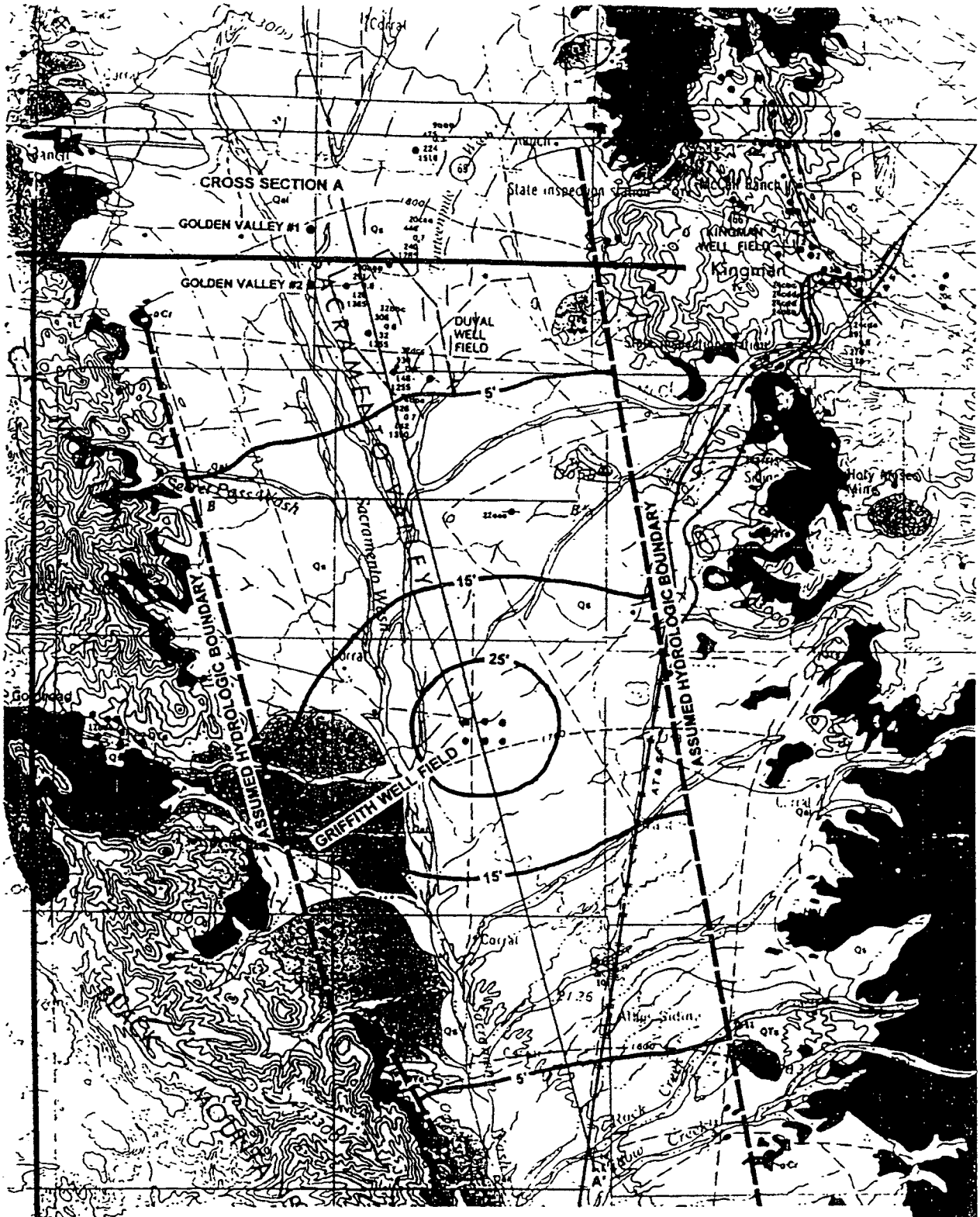

GRIFFITH ENERGY

PROJECTED WATER LEVEL DECLINES AFTER

FORTY (40) YEARS OF WITHDRAWAL

AT THE RATE OF 455,150 GPD PER WELL, SIX (6) WELLS

BASED ON ESTIMATED AQUIFER PARAMETERS

MOHAVE-003
Figure 5

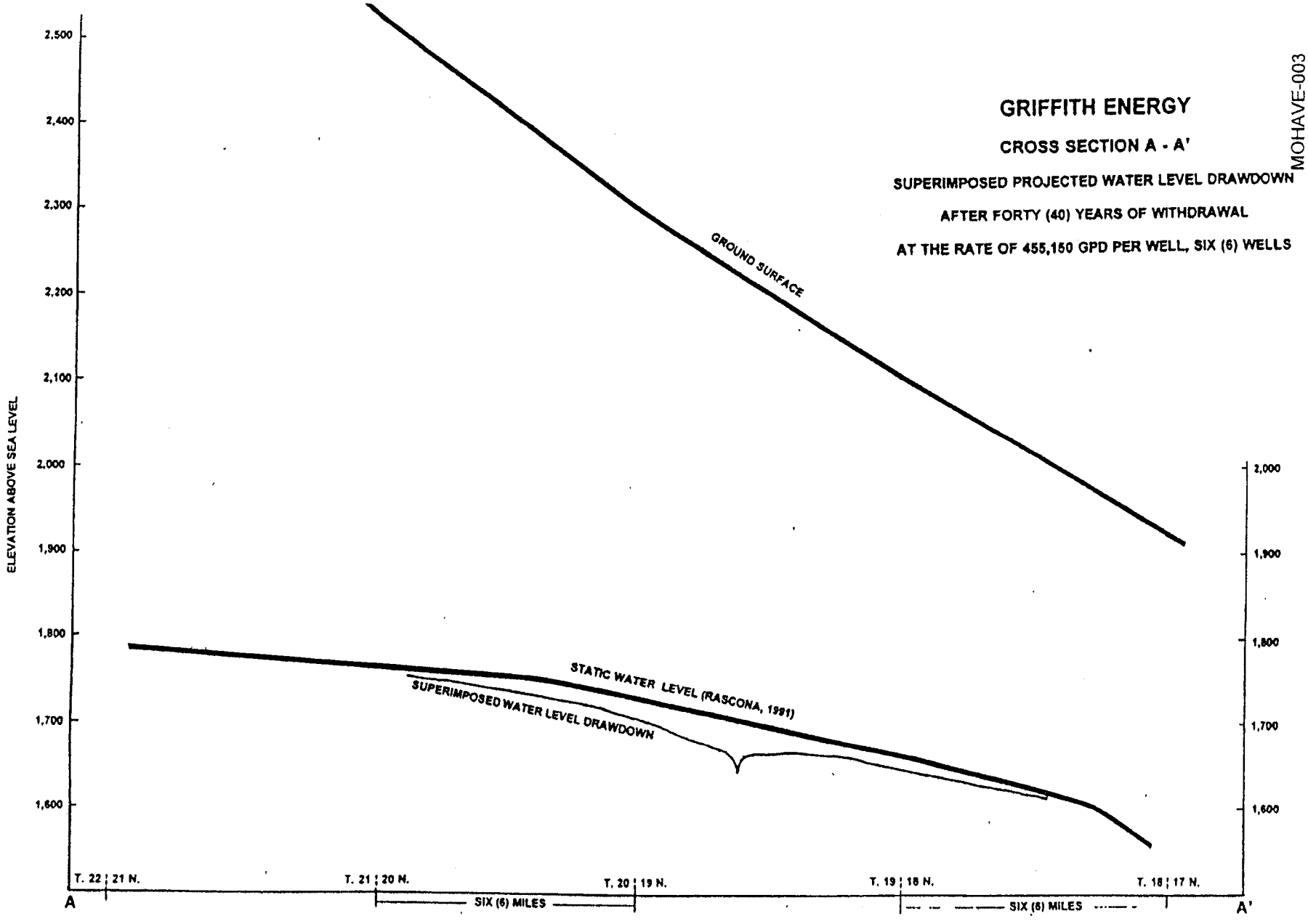
GRIFFITH ENERGY
CROSS SECTION A - A'
SUPERIMPOSED PROJECTED WATER LEVEL DRAWDOWN
AFTER FORTY (40) YEARS OF WITHDRAWAL
AT THE RATE OF 455,150 GPD PER WELL, SIX (6) WELLS
MOHAVE-003
ELEVATION ABOVE SEA LEVEL
2,500
2,400
2,300
2,200
2,100
2,000
1,900
1,800
1,700
1,600
GROUND SURFACE
STATIC WATER LEVEL (RASCONA, 1991)
SUPERIMPOSED WATER LEVEL DRAWDOWN
T. 22 | 21 N.
T. 21 | 20 N.
T. 20 | 19 N.
T. 19 | 18 N.
T. 18 | 17 N.
A
A'
SIX (6) MILES
SIX (6) MILES

Figure 6

SELECTED REFERENCES

Arizona Department of Water Resources, 1994, Staff Report on the Kingman Area Water Supply and Demand, A. D. W. R. Unpublished Report, Phoenix, Arizona.

Fenneman, Nevin M., 1931, Physiography of the Western United States, McGraw Hill Book Company, Inc., New York, N.Y.

Gillespie, J. B., and Bentley, C. B., 1971, Geohydrology of Hualapai and Sacramento Valleys, Mohave County, Arizona, U. S. Geological Survey Water Supply Paper 1899-H, Washington, D.C.

Gillespie, J. B., Bentley, C. B. and Kam, William, 1966, Basic Hydrologic Data of the Hualapai, Sacramento and Big Sandy Valleys, Mohave County, Arizona. Arizona State Land Department Water Resources Report Number 26, Phoenix, Arizona.

Harshbarger, John W., 1968, Progress and Review of Ground Water Development for Antler Project, Yucca, Arizona, unpublished Consultant's Report, Tucson, Arizona.

Lindstrom, W., 1998, Plant Manager, Praxair, Inc. Personal Communication, Kingman, Arizona.

Manera, Paul A., 1964, Electrical Resisitivity Survey of Sections 1 and 12, T. 18 N., R. 18 W., Mohave County, Arizona, Unpublished Consultant's Report, Phoenix, Arizona.

Manera, Paul A., 1967, Geologic Investigation and Electrical Resistivity Geophysical) Survey of Section 7, T. 15 N., R. 19 W., Mohave County, Arizona, Unpublished Consultant's Report, Phoenix, Arizona.

Manera, Paul A., 1994, Hydrologic Evaluation of the Impact of Withdrawal at the Scott Paper Company Facility, Yucca, Mohave County, Arizona, Unpublished Consultant's Report, Phoenix, Arizona.

Manera, Paul A., 1991, Hydrogeologic Evaluation of the Golden Valley (County Impovement District #1), Mohave County, Arizona, Unpublished Consultant's Report, Phoenix, Arizona.

Mayes, T. E., 1998, President, MCC Engineers Constructors Technical Services, Personal Communication, San Juan Capistrano, California.

Miller, Marion, 1969, Pumping Test Data and Analysis, Ford Proving Ground, Yucca, Arizona, Unpublished Data, Hanson's Pump Company, Phoenix, Arizona.

Pfaff, C. L., and Clay, D. M. 1979, Map Showing Ground Water Conditions in the Sacramento Valley Area, Mohave County, Arizona - 1979, U. S. Geological Service Water Resources Investigations Open File Report 81-418, Washington, D.C.

Rascona, S. J., 1991, Map Showing Groundwater Conditions in the Sacramento Valley Basin, Mohave County, Arizona - 1991, Arizona Department of Water Resources Hydrologic Map Series Report Number 21, Phoenix, Arizona.

Todd, David Keith, 1980, Groundwater Hydrology, 2nd ed, John Wiley and Sons, New York, N.Y.

Turner, Samual F., 1958, Electrical Resistivity Survey of Sections 11 and 14, T. 16., R 16 W., Mohave County, Arizona, Unpublished Consultant's Report, Phoenix, Arizona.

Turner, Samuel F., 1966, Water Supply Availability in the Dutch Flats Area, Sacramento Valley, Mohave County, Arizona, Unpublished Consultant's Report, Phoenix, Arizona.

van Brunt, Don, 1994, Director, Mohave County Department of Economic Development, Personal Communication, Kingman, Arizona.

Wilson, E. D. and Moore, R. T., 1959, Geologic Map of Mohave County, Arizona, Arizona Bureau of Mines, Tucson, Arizona.

HYDROLOGIC EVALUATION

SACRAMENTO VALLEY

MOHAVE COUNTY, ARIZONA

GOLDEN VALLEY COUNTY IMPROVEMENT DISTRICT No. 1

REPORT

MANERA, INC.
8316 North 53rd Street
Paradise Valley, AZ 85253
480-948-9818

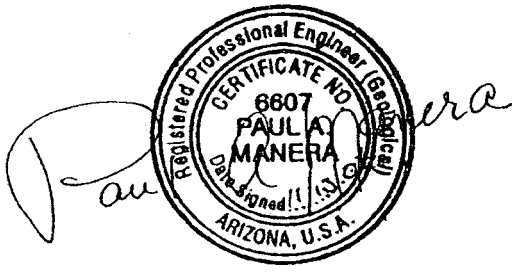

November 13, 2006

MOHAVE-003

TABLE OF CONTENTS

INTRODUCTION
- Location 1
- Purpose and Scope 2
- Previous Investigations 1

HYDROGEOLOGY
- Rock Types 2
- Basin Limits 3
- Thickness of Alluvial Fill 4
- Water Levels 4
- Thickness of Saturated Aquifer 5
- Water Quality 5
- Recharge to the Sacramento Valley 5

Aquifer Parameters
- Transmissivity 6
- Specific Yield 7

SIMULATION MODELING
- Method of Calculating Drawdown 7
- Calculation - Description of Withdrawal 8
- Simulated Withdrawal from Basin 9
- Model Design 10
- Model Runs and Results 11

CONCLUSIONS 13

REFERENCES

TABLE 1 . . . . . Following Page 10

FIGURES . . . . . 1 - 7

PLATES . . . . . 1 - 8

APPENDICES . . . . . Volume 2

INTRODUCTION

The Golden Valley County Improvement District No. 1 (GVID) was formed by the Mohave County Board of Supervisors in January 1976. Prior to 1987 no community water sources or facilities were available within the District. An agreement with the Crystal Springs Utility Company in 1987 established a storage - standpipe facility which could deliver approximately 30 gallons per minute. A long range plan for water development and distribution within the District in Phases 1 - 4 was initiated in the late 1980's. Engineering is now in progress on Phases 5 and beyond.

Two wells were drilled to supply the District. Following an evaluation of the ground water availability, the ADWR issued a letter determining that 1,400 acre feet of water would be available in the District (December 4, 1991). The letter stated that the 1,400 acre feet of water would be sufficient for about 6,200 lots at 200 gpd/lot and that 5,405 of those lots were already assigned.

Recent requests for service by multiple developers of property within the District far exceeds the 795 lots remaining, therefore, the District desires to increase the volume of water availability to satisfy these requests. Rather than attempt to determine the exact number of lots requesting service, as in many cases, the preliminary plats will not be started until it is known that water service is available, the District is applying for a designation increase of an additional 6,000 acre feet per year.

The ADWR in a letter dated August 14, 2006, the Department stated that it had determined that 9,000 acre feet per year will be physically and legally available to Golden Valley 5800, per the Department's Analysis of Adequate Water Supply (DWR #23-401823.0000) subject to review of specific restrictions upon the submission of each plat within the project. In effect, the volumes of waters allotted to the GVID (1,400 acre feet per year), Valley Pioneer Water Company (2,810 acre feet per year), the Mine Call (3,000 acre feet per year) and the Golden Valley 5800 (9,000 acre feet per year) and other undocumented demands in the northern portion of the Sacramento Valley, virtually eliminate the possibility of proving additional ground water availability for the GVID under the District.

Consequently, the District has elected to prove that additional ground water is available to the south in the Sacramento Valley approximately six miles south of Griffith and six miles north of Yucca to be moved to the District to satisfy the desired demand of 6,000 acre feet per year.

Location

The Sacramento Valley is a north - south trending basin, approximately twelve miles wide, located west of Kingman between the Cerbat - Hualapai Mountain complex on the east and the Black Mountains on the west in west central Mohave County, Arizona. The valley extends from Chloride on the southern end of the Cerbat Mountains south to the southern end of the Black Mountains four miles south of Yucca. The Sacramento Wash flows southward from the northern end of the valley around the south end of the Black Mountains then turning westward to flow into the Colorado River at Topock. The alluvial portion of the basin is exposed over approximately 360 square miles of the basin. These relationships are illustrated on Figure 1.

The Golden Valley County Improvement District No. 1 encompasses Sections 25 through 29 and 31 through 36, T. 22 N., R. 19 W. and Sections 1 through 5, Sections 8 through 17, Sections 20 through 29 and Sections 31 through 36, T. 21 N., R. 19 W. as illustrated on Figure 6.

Purpose and Scope

The Initial purpose of this study was to determine the quantity of ground water available to support the development of land within the GVID. As it became apparent that additional ground water availability was not present within the District boundaries, the focus of the study changed to determining whether the water availability to the south in the basin was sufficient to satisfy the projected demand of 6,000 acre feet per year

The study was to be completed based upon data available through public sources, i.e. literature, open files of the governmental agencies, private consultant reports available to the public, etc. No additional field work was authorized for this study.

Previous Investigations

Prior to 1960, numerous investigations in the Kingman area were conducted, primarily by personnel of the United States Geological Survey, however, none of these specifically pertained to the ground water conditions in the Sacramento Valley. The first major work concerning ground water in the basin was conducted by Gillespie and Bentley (1971). After 1971, a number of site specific investigations were conducted by Consultants for the development of individual wells. Most of these reports or letters of opinion are not available to the general public. Manera (1991) evaluated the ground water available to the Golden Valley Improvement District and later, the development of the Griffith Energy well field (2000). Montgomery, Errol L. and Associates, Inc., (2005) conducted an investigation of the ground water supply available for the development of Golden Valley 5800.

HYDROGEOLOGY

Rock Types

The rock types present consist of:

various types of volcanic rock which appear to be non-water-bearing in the Black Mountains which form the western edge of the Sacramento basin. The core of the Black Mountain range, consisting of Paleozoic sedimentary and intrusive rocks, are visible only on the western side of the mountains;

primarily granite and metamorphic rock forming the Cerbat - Hualapai Mountains with a small area of Quaternary and Tertiary volcanics in the saddle between the two ranges in the Kingman area. The granitic - metamorphic complex is relatively non-water-bearing. The younger volcanic rocks have proven to be water-bearing and have been exploited to some degree in the Kingman well field, and;

the alluvial fill of the basin between the two mountain ranges which has been divided by ADWR, in the review of the Golden Valley 5800 application, into two portions:

> interbedded alluvium and volcanic rocks along the western front of the Cerbat - Hualapai Mountain complex. This area is water bearing, although the water levels indicate that in some areas the flooded portion of the formation rests upon non-water-bearing rock types at depth, and;
>
> alluvial fill extending to depths exceeding 1,800 feet, which form the primary aquifer of the basin. The total thickness of the alluvial fill has not yet been fully determined by the drill. The alluvium of Quaternary and Tertiary age have been divided into three major units (Gillespie and Bentley, (1971), older, intermediate and younger alluvium of which the older unit is the major aquifer as both the intermediate and younger alluvium are primarily above the water level in the basin. This may not be true in the southern portion of the basin where the water level is 300 feet or less.
>
> The Arizona Department of Water Resources Well Report giving the well characteristics for wells in the Sacramento Valley is included as Appendix A . Representative Drillers' logs of the alluvial fill portion illustrating the types of materials encountered in the subsurface of the basin are included as Appendix B.

Basin Limits

The extent of the exposure of the alluvial fill in the Sacramento Valley is illustrated on Figure 1, a portion of the geologic map of Mohave County. The Arizona Department of Water Resources sub-divided the alluvial basin into two portions;

> the alluvial fill portion of the basin was considered to be the western six mile wide strip along the eastern front of the Black Mountains extending from Highway 68 south to south of Yucca. This portion of the alluvial fill section was defined as that portion of the basin in which the drill cutting logs indicated that the primary subsurface materials were sand, gravel and clay in various forms, i.e. unconsolidated, mildly, moderately or hard consolidation in the form of conglomerate, which the Department considered to be the sole aquifer for the basin, and;
>
> the three mile plus or minus strip along the western front of the Hualapai Mountains was considered to be that portion of the exposed alluvial fill underlain by interbedded layers of alluvium and volcanic rocks of various forms. It was considered that the interbedded formations were not part of the aquifer.

The delineation of the alluvial aquifer, the interbedded alluvial fill and volcanic rocks and the hydrologic boundaries enclosing the aquifer are illustrated on Figure 1. The dividing line between these two divisions of the alluvial fill was considered by ADWR to be the eastern hydrologic boundary in the review of the Golden Valley 5800 study.

Although it is believed that the alluvial aquifer is slightly larger than that delimited by ADWR, the limits set by ADWR will be followed in this study.

Thickness of the Alluvial Fill

Gilllespie and Bentley (1971) estimated the thickness of the 4,400 feet across the middle of the Sacramento Valley, based on geophysical (conventional refractive seismic) evidence.

Although it is expected that the alluvial - bedrock contact is not a smooth curve across the basin, many deep wells were terminated in the alluvial fill, i.e.:

Owner	Well	Total Depth, feet
Standard Metals Corp.	B(17-17)30ddd	1,000 feet;
Mohave County	B(19-18)10daa	1,525 feet;
GVID	B(21-19)13ddd	1,505 feet.

and the Geologic Cross-Section A - A', Figure 2, extending from B(21-19)2ddd to B(21-18)32dcc illustrate that the thickness of the alluvial fill exceeds 1,500 feet in various parts of the basin. The location of Geologic Cross-Section A - A' is shown on Figure 6.

Water Levels

The water levels are relatively flat in the northern end of the basin, ranging from an elevation of 1775 feet north of Highway 68 to 1746 feet twelve miles south at the southern boundary of T. 20 N., R. 18 W. The water level then slopes rapidly south to Yucca where the water level elevation is 1480 feet, a slope of 17.73 feet per mile.

Water levels in the Sacramento Valley basin appear to be in equilibrium at the present time. The fact that the water levels of 2006 are almost identical to those measured by Rascona (1991) and Pfaff and Clay (1981) and is similar to those reported by Gillespie and Bentley (1971) show that few, if any, gross changes have occurred in the past thirty five years. The pumping of the mine wells in T. 21 N., R. 18 W. in the 1960's and 70's generated a limited cone of depression which has virtually disappeared since withdrawal for mining purposes ceased in around 1980.

The water levels in the alluvial center of the basin are illustrated on Figure 3 and the depth to water are illustrated on Figure 4. The trend of the water level in the hydrograph of well B(20-18)22aac, Figure 5, shows a decline of approximately eight feet during the period 1964 - 2004 illustrating that the water levels in the northern portion of the alluvial basin of the Sacramento Valley have remained relatively constant for the last forty years.

Thickness of the Saturated Aquifer

The minimum saturated thickness of the aquifer was calculated by subtracting the total depths of the wells, usually but not always, terminating in the alluvium, from the water level.

The aquifer in the Golden Valley portion of the Sacramento Valley has a saturated thickness ranging from 443 feet, in a well that terminated in bedrock, to more than 575 feet in wells that terminated in alluvial fill. Further south, in the Griffith area, the thickness of the aquifer exceeds 1,000 feet.

Figure 6 illustrates the locations of the calculated thickness.

Water Quality

In general, the water quality from the aquifer(s) within the Sacramento Valley meets the current drinking water standards. Both GVID and the Valley Pioneer Water Company are in compliance with the Department of Environmental Quality as a water providers.

Laboratory analysis of the waters from the Golden Valley 5800 Well GV-1 [B(21-18)3dba] show that the chemical quality of the composite sample taken from the well head during the pumping test meets all the requirements for a "New Source" public water supply (Errol L. Montgomery & Associates, 2005).

No recorded WQARF Superfund sites have been designated in the area of study.

Recharge to the Sacramento Valley

The majority of the recharge to the Sacramento Valley occurs as runoff of the Hualapai Mountains on the eastern side of the basin infiltrating into the alluvial deposits of the valley floor. The flow is then towards the central portion of the basin and southward.

The estimates of the outflow of the basin, and consequently the recharge when the basin is in equilibrium, was calculated at 4,000 acre feet per year (Gillespie and Bentley, 1971, p. H27, Manera, 1994) and 1,000 acre feet per year by Rascona (1991). However, Rascona does not describe the method used to calculate the outflow. Using the slope of the water levels determined by Rascona on his map, 300 feet in seven miles, a width of the outlet measured at 3.4 miles on the surface, constricted to 2 miles in the subsurface and a transmissivity value of 46,000 gpd/ft then:

Transmissivity x slope of water level x width in feet x 365 (year) / 325,851 (gallons per acre foot) = acre feet per year.

$$46{,}000 \times \frac{300}{36{,}960} \times 10{,}560 \times 365 / 325{,}851 = 4{,}416 \text{ ac/ft/yr}$$

which matches the calculations of Gillespie and Bentley (1971) and Manera (1994) of approximately 4,000 ac/ft/yr

Aquifer Parameters

Transmissivity

The values of transmissivity, calculated from pumping tests were taken from various reports, calculated by Manera, Inc. from pumping tests, or in one case estimated from the specific capacity of a well (Theis, and others, pages 331 - 341, in Bentall, 1963), in the Sacramento Basin are:

Well	Pumping T gpd/ft	Recovery T gpd/ft
B(17-17)9cdd[1]	63,000	
B(17-17)32bcb[2]	52,000	
B(19-18)10aaa	61,983	63,360
B(19-18)10cdd	76,344	
B(19-18)10daa	69,375	42,818
B(19-18)15acc	66,000	44,968
B(19-18)15add	29,106	35,280
B(20-18)4bba[2]	46,000	
B(21-18)32dcc[2]	35,000	
B(21-19)13ddd	17,000	
B(21-19)25aaa	37,000	

[1] calculated from specific capacity
[2] taken from Gillespie and Bentley (1971)

The pumping test and recovery data indicate that the portion of the basin including and south of T. 20 N. have values of T greater than 43,000 gpd/ft with a majority of the values exceeding 50,000 gpd/ft. There is one exception to this range and the recovery data indicates a value of 35,000 gpd/ft.

Two of the three wells in T. 21 N., R. 19 W., which have test reports available, have values of T of 35,000 gpd/ft and 37,000 gpd/ft. In the remaining well, B(21-19)13ddd (GVID Well 1), the value of T = 17,000 gpd/ft was calculated from the first seventy minutes of the pumping test i.e. the early T_E. The pumping levels during the latter fourteen (1,400 minutes) of the test, Figure 7, indicate that value of T_L is much larger than the calculated T_E of 17,000 gpd/ft.

The average of the pumping T value is 50,255, say 50,000 gpd/ft and the average of the recovery T values is 46,606 gpd/ft. Thus, the average value of T = 46,000 gpd/ft used in the model appears reasonable.

The value of T = 46,000 gpd/ft is higher than the T value used in the ADWR review of the Golden Valley 5800 model, however, it is believed the data supports the use of this higher value.

Specific Yield

All of the wells used in the model penetrate primarily alluvial materials containing a high percentage of sand and gravels and moderate to minor amounts of clay. Therefore, it is believed that a specific yield of nine (9) percent is reasonable. Model runs using a specific yield of seven (7) percent will be made to project a worst case scenario.

There are at several factors which makes the use of the nine (9) percent value for the specific yield viable:

the recharge to the basin was not included in the calculations of drawdown in the simulation model;

the eastern hydrologic boundary was established on the basis that wells east of the hydrologic boundary penetrate interbedded layers of alluvial fill and volcanics or only the younger volcanics. Regardless of the source rocks, these wells yield various amounts of water;

consequently, the eastern hydrologic boundary has to be a leaky boundary which will allow both the recharge and water draining from aquifers of the various rock types to the east to flow into the "alluvial basin as delimited" of the Sacramento Wash as the water level in the Sacramento alluvial basin declines due to withdrawal, and;

the exact location of the eastern hydrologic boundary was determined by the location of wells containing subsurface volcanics in the drill cutting logs. The separation of the wells does not allow an exact delineation of the hydrologic boundary, therefore, It is possible that the alluvial basin could be slightly wider than stated, allowing a larger storage area than delimited. It is unlikely that the delimited alluvial basin would be smaller.

SIMULATION MODELING

Method of Calculating Drawdown

The simulation model utilized for this study was THWells, ver. 4.01 (van der Heijde, 1996). The program THWells calculates the drawdown of piezometric head due to the combined effect of up to 100 discharge wells in a confined, leaky-confined or unconfined aquifer. The calculations of the total drawdown, in this case, are based on the Theis equation for non-steady state flow in an isotropic, homogeneous confined aquifers with a correction applied for water table aquifers. Boundary effects can be included through the use of image well theory.

In this case, the number of wells was 19 discharge points within the alluvial aquifer with 19 image well discharge points west of the alluvial basin and 19 image well discharge points east of the alluvial basin for a total of 57 discharge points to simulate the two hydrologic boundaries of the alluvial basin.

It is understood that there are inherent weaknesses in the model as designed, including the fact that the aquifer had to be considered a isotropic, homogeneous formation, however, the model is as good or better than a more sophisticated model design considering the limited volume of data available to establish the aquifer characteristics.

Although this is a relatively simple model, the field data is sufficient to generate "good" results.

Calculation - Description of Withdrawal

The volume of withdrawal was based on the volume of the designation of the Water Company or the approved volume of ground water allotted to a proposed subdivision or the projected industrial use of the I-40 (Griffith) Industrial Corridor. The volume allotted to the designated areas are:

Golden Valley Improvement District	1,400 acre feet per year
Valley Pioneer Water Company,	
8,300 lots at 0,32 ac/ft/lot	2,656 acre feet per year
Non-residential parcels	155 acre feet per year
Mine call	3,000 acre feet per year
Golden Valley 5800	9,000 acre feet per year
I-40 Corridor	
Praxair	20 acre feet per year
MTC Prison	200 acre feet per year
Wal-Mart	180 acre feet per year
Griffith Energy, 2,396.96 ac/ft/yr/35 years	839 acre feet per year

The GVID, the Valley Pioneer Water Company, the Mine call and Golden Valley 5800 have fixed amounts of water allotted to the entity

The I-40 Corridor water demands were determined in the following manner:

The Praxair, the MTC Prison and Wal Mart water demands were the values given by the entity

The Griffith Energy facility has a projected life of 40 years. The plant has been in operation for a period of five years. The present owners of the Griffith Energy Plant calculated the use of 2,396.96 acre feet per year for the next 35 years based on:

100 million gallons per day for the months of June, July, August and September;

75 million gallons per day for the months of October, November, December April and May, and;

It is understood that there are inherent weaknesses in the model as designed, including the fact that the aquifer had to be considered a isotropic, homogeneous formation, however, the model is as good or better than a more sophisticated model design considering the limited volume of data available to establish the aquifer characteristics.

Although this is a relatively simple model, the field data is sufficient to generate "good" results.

Calculation - Description of Withdrawal

The volume of withdrawal was based on the volume of the designation of the Water Company or the approved volume of ground water allotted to a proposed subdivision or the projected industrial use of the I-40 (Griffith) Industrial Corridor. The volume allotted to the designated areas are:

Golden Valley Improvement District	1,400 acre feet per year
Valley Pioneer Water Company,	
8,300 lots at 0,32 ac/ft/lot	2,656 acre feet per year
Non-residential parcels	155 acre feet per year
Mine call	3,000 acre feet per year
Golden Valley 5800	9,000 acre feet per year
I-40 Corridor	
Praxair	20 acre feet per year
MTC Prison	200 acre feet per year
Wal-Mart	180 acre feet per year
Griffith Energy, 2,396.96 ac/ft/yr/35 years	839 acre feet per year

The GVID, the Valley Pioneer Water Company, the Mine call and Golden Valley 5800 have fixed amounts of water allotted to the entity

The I-40 Corridor water demands were determined in the following manner:

The Praxair, the MTC Prison and Wal Mart water demands were the values given by the entity

The Griffith Energy facility has a projected life of 40 years. The plant has been in operation for a period of five years. The present owners of the Griffith Energy Plant calculated the use of 2,396.96 acre feet per year for the next 35 years based on:

100 million gallons per day for the months of June, July, August and September;

75 million gallons per day for the months of October, November, December April and May, and;

2 million gallons per day for January, February and March.

The 35 year usage of 83,894 acre feet was then spread over the 100 year period of the simulated withdrawal yielding 839 ac/ft/yr.

The total I-40 Corridor well field then had a projected withdrawal of 1,239 acre feet per year.

The total volume of withdrawal was then apportioned to the number of wells operated in each entity.

Simulated Withdrawal from Basin

Withdrawal of ground water from the alluvial basin, used in the simulation model, was based on the complete build out as of January 1, 2007. The volume of withdrawal was the volume allocated by some form of an adequate water supply designation by the ADWR, plus the projected demand of the I-40 Industrial Corridor near Griffith and the 6,000 acre feet per year requested by virtue of this report and application.

The location of wells, ADWR I.D. Number and the committed volume of withdrawal, as of October 2006, from each well used in model are:

Present Designations or Demands:

Golden Valley Improvement District		1,400 ac/ft/yr
B(21-19)13ddd	55-530666	624,960 gpd
B(21-19)25aaa	55-530665	624,960 gpd
Valley Pioneer Water Company, including the Mine call		5,810 ac/ft/yr
B(21-18)20dbb	55-623084	1,296,631 gpd
B(21-18)30bba	55-623082	1,296,631 gpd
B(21-18)32bbb	55-623083	1,296,631 gpd
B(21-18)32dcc	55-623081	1,296,631 gpd
I-40 Industrial Corridor	(100 year basis)	1,239 ac/ft/yr
B(19-18)15acc	55-574436	276,527 gpd
B(19-18)10cdd	55-571367	276,527 gpd
B(19-18)10aaa	55-580149	276,527 gpd
B(19-18)10daa	55-574434	276,527 gpd
Golden Valley 5800		9,000 ac/ft/yr
B(20-18)4aaa		1,339,114 gpd
B(20-18)8bbb		1,339,114 gpd
B(20-18)8ccc		1,339,114 gpd

B(21-18)9bbb	1,339,114 gpd
B(20-18)15ccc	1,339,114 gpd
B(20-18)15ddd	1,339,114 gpd

Application to be Filed

Proposed Yucca Well Field:	6,000 ac/ft/yr
B(18-18)11baa	1,785,485 gpd
B(18-18)12bcd	1,785,485 gpd
B(18-18)13bdd	1,785,485 gpd

Model Design

The model utilized for the analysis of the drawdown in water levels was THWells, ver. 4.01. The origin of the model grid was located at the northwest corner of T. 21 N., R. 20 W. G&SR B&M. Townships 17 through 21 North., Ranges 17 through 20 West were included in the grid so as to include the alluvial portion of the Sacramento Valley extending from Highway 68 south to Yucca and the areas of the image wells.

The model design was:

grid interval	5280 feet in both the x and the y directions;
transmissivity	46,000 gallons per day per foot;
specific yield	7 percent (.07) and 9 percent (.09)
aquifer thickness	500 feet
well locations:	
production	given in Table 1
image	given in Table 1
volume of withdrawal:	
GVID	1,400 acre feet per year
Valley Pioneer Water Co.	2,810 acre feet per year
Mine call	3,000 acre feet per year
I-40 Industrial Corridor	1,239 acre feet per year
Golden Valley 5800	9,000 acre feet per year
Yucca Well Field	4,000 and 6,000 acre feet per year

The Golden Valley Improvement District wells, the Valley Pioneer Water Company wells and the I-40 Corridor wells used in the model are presently in place. Not all of the existing wells owned by those entities were utilized in the model, however, the total projected production for each entity was divided among the wells used.

The wells used in the model for withdrawal by the Golden Valley 5800 project and the proposed Yucca Well Field for Golden Valley Improvement District are theoretical wells. These well locations are approximate and the location of the wells may be moved based on land acquisition.

TABLE 1

GOLDEN VALLEY IMPROVEMENT DISTRICT

SACRAMENTO VALLEY BASIN WELLS AND IMAGE WELL LOCATIONS

Well Location	x	y	*Model I.D.*	x	y	*Model I.D.*	x	y	*Model I.D.*
GVID									
B(21-19)13aaa	62,832	15,840	*1*	25,608	31,680	*3*	80,784	7,920	*5*
B(21-19)25aaa	62,832	21,120	*2*	29,832	35,376	*4*	84,480	12,408	*6*
VALLEY PIONEER									
B(21-18)20dbb	71,280	18,744	*7*	21,648	39,864	*11*	76,560	16,632	*15*
B(21-18)30bba	66,792	21,648	*8*	26,928	38,280	*12*	82,368	15,048	*16*
B(21-18)32bbb	69,696	26,928	*9*	25,872	44,088	*13*	84,480	20,592	*17*
B(21-18)32dcc	71,808	31,416	*10*	30,888	48,840	*14*	86,064	25,344	*18*
RHODES Theoretical									
B(20-18)4bbb	77,352	32,208	*19*	27,984	53,856	*25*	83,424	30,096	*31*
B(20-18)8bbb	71,808	38,016	*20*	35,376	53,856	*26*	91,344	28,512	*32*
B(20-18)8ccc	71,808	42,504	*21*	38,016	56,496	*27*	93,456	32,736	*33*
B(20-18)9bbb	77,088	38,544	*22*	31,416	57,288	*28*	87,120	33,792	*34*
B(20-18)9ccc	77,088	42,240	*23*	35,112	60,456	*29*	90,816	36,960	*35*
B(20-18)16ccc	77,088	47,520	*24*	38,280	63,888	*30*	94,512	39,600	*36*

TABLE 1, Page 2

Well Location	x	y	*Model I.D.*	x	y	*Model I.D.*	x	y	*Model I.D.*
I-40 CORRIDOR									
B(19-18)10aaa	86,064	69,168	*37*	47,520	86,064	*41*	104,808	61,512	*45*
B(19-18)10cdd	83,952	74,448	*38*	51,744	87,648	*42*	108,768	63,360	*46*
B(19-18)10daa	86,064	71,808	*39*	49,104	87,648	*43*	105,600	63,360	*47*
B(19-18)15acc	84,480	77,088	*40*	53,328	89,760	*44*	110,880	65,736	*48*
YUCCA									
B(18-18)11baa	88,176	105,072	*49*	69,696	112,464	*52*	117,744	101,376	*55*
B(18-18)12bcd	94,512	102,960	*50*	64,416	115,632	*53*	111,408	100,840	*56*
B18-18)13bdd	94,512	109,824	*51*	68,640	120,384	*54*	112,464	107,712	*57*

Model Runs and Results

Eight model runs were completed with the THWells results included as Appendices C through J and plotted as Plates 1 through 8. Each run was for 100 years starting in the year 2007 and ending in 2107. Each run assumed complete build out with its attendant demand as of January 1, 2007.

Although not a committed or requested demand for residential use, the I-40 Industrial Corridor projected use of 1,239 acre feet per year was included in all runs.

The eight runs were subdivided into four scenarios (cases) with a specific yield of seven (7) percent and nine percent (9) in each scenario.

Case 1 existing conditions or designations

Plate 1 Water Level Declines in 100 Years When T = 46,000 gpd/ft and SY = .07 for the committed demand of GVID = 1,400 ac/ft/yr, Valley Pioneer Water Company = 2,811 ac/ft/yr and the Mine Call = 3,000 ac/ft/yr.

Plate 2 Water Level Declines in 100 Years When T = 46,000 gpd/ft and SY = .09 for the committed demand of GVID = 1,400 ac/ft/yr, Valley Pioneer Water Company = 2,811 ac/ft/yr and the Mine Call = 3,000 ac/ft/yr.

Result in Case 1 (Plates 1 and 2)

the drawdown caused by the withdrawal of a total of 7,211 acre feet per year from the wells of the Golden Valley Improvement District and the Valley Pioneer wells in the northern end of the basin and 1,239 acre feet per year at Griffith (I-40 Industrial Corridor) would result in a decline in the water level of approximately one and one half foot per year in the extreme northern end of the basin around the wells in the southwest portion of T. 21 N., R. 18 W. and one half foot per year in the Griffith area. The difference caused by the difference in specific yield is relatively small in this case.

Case 2 the existing conditions of Case 1 plus the additional withdrawal of 9,000 acre feet per year for Golden Valley 5800.

Plate 3 Water Level Declines in 100 Years When T = 46,000 gpd/ft and SY = .07 for the committed demand of GVID = 1,400 ac/ft/yr, Valley Pioneer Water Company = 2,811 ac/ft/yr and the Mine Call = 3,000 ac/ft/yr and the Requested Demand for Golden Valley 5800 = 9,000 ac/ft/yr.

Plate 4 Water Level Declines in 100 Years When T = 46,000 gpd/ft and SY = .09 for the committed demand of GVID = 1,400

ac/ft/yr, Valley Pioneer Water Company = 2,811 ac/ft/yr and the Mine Call = 3,000 ac/ft/yr and the Requested Demand for Golden Valley 5800 = 9,000 ac/ft/yr.

Result In Case 2 (Plates 3 and 4) the decline caused by 16,211 acre feet in the northern end of the basin and the 1,239 acre feet per year at Griffith (I-40 Industrial Corridor) would result in a decline in the water level:

ranging up to 4 feet per year in the concentrated well field in the northern end of the basin and 1.5 feet per year at Griffith when the specific yield was .07;

slightly more than 3 feet per year in the concentrated well field in the northern end of the basin and 1 foot per year at Griffith when the specific yield was .09, and;

Case 3 the conditions of Case 2 plus an additional withdrawal of 4,000 acre feet per year at the proposed Yucca Well Field in T. 18 N., R. 18 W.

Plate 5 Water Level Declines in 100 Years When T = 46,000 gpd/ft and SY = .07 for the committed demand of GVID = 1,400 ac/ft/yr, Valley Pioneer Water Company = 2,811 ac/ft/yr and the Mine Call = 3,000 ac/ft/yr and the Requested Demand for Golden Valley 5800 = 9,000 ac/ft/yr and the Proposed Yucca Well Field = 4,000 ac/ft/yr.

Plate 6 Water Level Declines in 100 Years When T = 46,000 gpd/ft and SY = .09 for the committed demand of GVID = 1,400 ac/ft/yr, Valley Pioneer Water Company = 2,811 ac/ft/yr and the Mine Call = 3,000 ac/ft/yr and the Requested Demand for Golden Valley 5800 = 9,000 ac/ft/yr and the Proposed Yucca Well Field = 4,000 ac/ft/yr.

Result In Case 3 (Plates 5 and 6) the decline caused by 16,211 acre feet in the northern end of the basin, 1,239 acre feet per year at Griffith (I-40 Industrial Corridor) and 4,000 acre feet per year at the proposed Yucca Well Field would result in a decline in the water level:

ranging from 2 feet up to 5 feet per year around one well near the eastern hydrologic boundary in the concentrated well field in the northern end of the basin, 1.75 feet per year at Griffith and 1.25 feet per year at the Yucca Well Field when the specific yield was .07;

ranging from 2 feet up to slightly more than 3.5 feet per year around one well near the eastern hydrologic boundary in the concentrated well field in the northern end of the basin, one foot per year at Griffith and 1.2 feet per year at the Yucca Well Field when the specific yield was .09;

Case 4 the conditions of Case 2 plus an additional withdrawal of 6,000 acre feet per year at the proposed Yucca Well Field in T. 18 N., R. 18 W.

Plate 7 Water Level Declines in 100 Years When T = 46,000 gpd/ft and SY = .07 for the committed demand of GVID = 1,400 ac/ft/yr, Valley Pioneer Water Company = 2,811 ac/ft/yr and the Mine Call = 3,000 ac/ft/yr and the Requested Demand for Golden Valley 5800 = 9,000 ac/ft/yr and the Proposed Yucca Well Field = 6,000 ac/ft/yr.

Plate 8 Water Level Declines in 100 Years When T = 46,000 gpd/ft and SY = .09 for the committed demand of GVID = 1,400 ac/ft/yr, Valley Pioneer Water Company = 2,811 ac/ft/yr and the Mine Call = 3,000 ac/ft/yr and the Requested Demand for Golden Valley 5800 = 9,000 ac/ft/yr and the Proposed Yucca Well Field = 6,000 ac/ft/yr.

Result In Case 4 (Plates 7 and 8) the decline caused by 16,211 acre feet in the northern end of the basin, 1,239 acre feet per year at Griffith (I-40 Industrial Corridor) and 6,000 acre feet per year at the proposed Yucca Well Field would result in a decline in the water level:

ranging from 2 feet up to 5 feet per year around one well near the eastern hydrologic boundary in the concentrated well field in the northern end of the basin, 2 feet per year at Griffith and 1.6 feet per year at the Yucca Well Field when the specific yield was .07;

ranging from 2 feet up to slightly more than 3.5 feet per year around two wells near the eastern hydrologic boundary in the concentrated well field in the northern end of the basin, 1.75 foot per year at Griffith and 1.6 feet per year at the Yucca Well Field when the specific yield was .09;

CONCLUSIONS

The Sacramento Valley basin is capable of yielding:

the 1,400 acre feet per year committed to the Golden Valley Improvement District;

the 2,810 acre feet per year committed to the Valley Pioneer Water Company;

the 3,000 acre feet per year for the Mine Call;

the 1,239 acre feet per year demand of the I-40 Industrial Corridor;

the 9,000 acre feet per year application for Golden Valley 5800, and;

the 6,000 acre feet per year requested in this application, to be transported to the GVID area in the northern portion of the basin;

for the next 100 years based on a value of transmissivity of 46,000 gallons per day per foot and a specific yield of either seven percent or nine percent.

The thickness of the saturated aquifer in the northern end of the basin, that portion called Golden Valley, ranges from 443 feet to more than 575 feet, thus the drawdown does not exceed the saturated thickness. Further, although the model indicates that the water level will decline 500 feet around one well in the concentrated well field in the northern portion of the basin, there are a number of mitigating circumstances which will restrict the water level from declining to that depth during the 100 year period defined for this study:

1. the model runs were all based on complete build out on January 1, 2007, whereas at this time:

    a. the Golden Valley Improvement District has an allotment for 6,200 lots but is serving only 1,380 meter connections for a withdrawal of 317 acre feet per year;
    b. Valley Pioneer Water Company has an allotment for 8,300 lots but is serving only 2,072 meter connections with a withdrawal of 537 acre feet per year;
    c. Golden Valley 5800 has not yet started ground water withdrawal, but may be approved for approximately 20,000 lots, and;
    d. the I-40 Industrial Corridor will not be at full withdrawal for another two years.

    As it is unlikely that complete build out will be complete for at least 25 plus years, the volume of withdrawal will be significantly less than stated in the model;

2. the recharge of approximately 4,000 acre feet per was not included in the model which will add 400,000 acre feet of water to the aquifer over the next 100 years;

3. there are numerous producing wells east of the eastern hydrologic boundary of the defined alluvial aquifer, indicating a minor aquifer in the alluvial - volcanic inter-bedded formation to the east of the defined alluvial aquifer. As the water level in the defined alluvial basin decline, ground water from the minor aquifer to the east will flow through the delimited hydrologic boundary into the defined alluvial basin, increasing the recharge rate to the alluvial aquifer, and;

4. finally, as the mine call is dependent on the economics of copper, the mine call may not be a continuous withdrawal of the 3,000 acre feet per year for the next 100 years. In the past 60 years withdrawal from the ground water reservoir for the mine was in effect only 26 years.

REFERENCES

ADWR, 1994, Staff Report on Kingman Area Water Supply and Demand, (Regarding need to establish an AMA in the Sacramento or Hualapai Basins). Phoenix, Arizona

Bentall, R., 1963, Shortcuts and Special Problems in Aquifer Tests, U. S. Geological Survey Water Supply Paper 1545-C, U. S. Government Printing Office, Washington, D.C.

Bentall, R., 1963, Methods of Determining Permeability, Transmissibility and Drawdown, U. S. Geological Survey Water Supply Paper 1536-I, U. S. Government Printing Office, Washington, D.C.

Gillespie, J. B., Bentley, C. B. and Kam, W., 1966, Basic Hydrologic Data of the Hualapai, Sacramento and Big Sandy Valleys, Mohave County, Arizona, Arizona State Land Department Water Resources Report Number Twenty One, Phoenix, AZ.

Gillespie, J. B. and Bentley, C. B., 1971, Geohydrology of Hualapai and Sacramento Valleys, Mohave County, Arizona, U. S. Geological Survey Water Supply Paper 1899-H, U. S. Government Printing Office, Washington, D.C.

Manera, P. A., 1991, Hydrogeologic E valuation o f G olden V alley, M ohave County, Arizona, Consultant Report, Phoenix, AZ 85253

1994, Hydrologic Evaluation of the Impact of Withdrawal at the Scott Paper Company, Yucca, Mohave County, Arizona, Consultant Report, Phoenix, AZ 85253.

2000, Hydrologic Evaluation and Well Data, Griffith Energy, Inc. Mohave County, Arizona,, Consultant Report, Phoenix, AZ 85253.

Montgomery, Errol L. and Associates, Inc., 2005, Regional Hydrogeology, Source of Water Supply, and projected 100-Year Drawdown Impacts in the Vacinity of the Golden Valley South Master Planned Community, Mohave County, Arizona. Consultants R eport, Tucson, Arizona.

Pfaff, C. L. and Clay, D. M., 1981, Map Showing Ground-Water Conditions in the Sacramento Valley Area, Mohave County, Arizona - 1979, U. S. Geological Survey Water-Resources Investigations Open-File Report 81-418

Rascona, S. J., 1991, Map Showing Groundwater Conditions in the Sacramento Valley, Basin, Mohave County, Arizona, Arizona Department of Water Resources Hydrologic Map Series Report Number 21, Phoenix, Arizona.

van der Heijde, P. K. M., 1996, THWells, Flow in an Confined, Leaky Confined or Unconfined Aquifer with Regional Uniform Flow and Multiple Wells, International Ground Water Modeling Center, Colorado School of Mines, Golden, CO.

Wilson, E. D. and Moore, R. T. et al., 1959, Geologic Map of Mohave County, Arizona, Arizona Bureau of Mines, University of Arizona, Tucson, Arizona

FIGURES 1 - 7

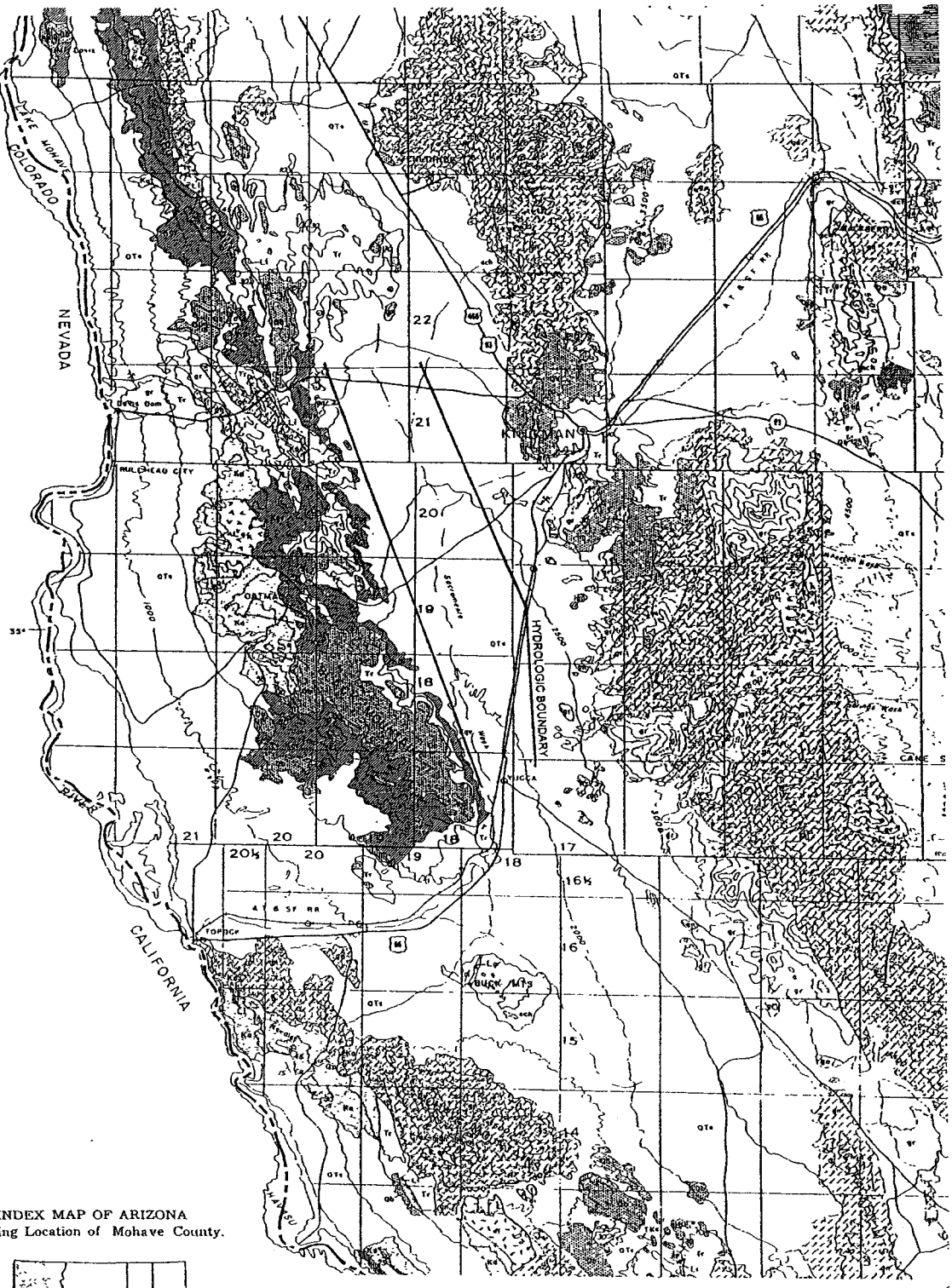

INDEX MAP OF ARIZONA
Showing Location of Mohave County.

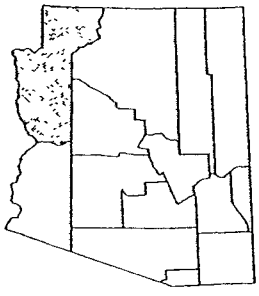

GEOLOGIC MAP OF THE SOUTHWESTERN PORTION OF MOHAVE COUNTY

SHOWING THE HYDROLOGIC BOUNDARIES OF THE ALLUVIAL BASIN OF THE SACRAMENTO VALLEY AS ESTABLISHED BY ADWR

SCALE: 1 inch = 6 miles

Taken from The Geologic Map of Mohave County, Arizona
Wilson, E. D. et al., 1959

FIGURE 1

Golden Valley County Improvement District No. 1

GEOLOGIC CROSS-SECTION A - A'

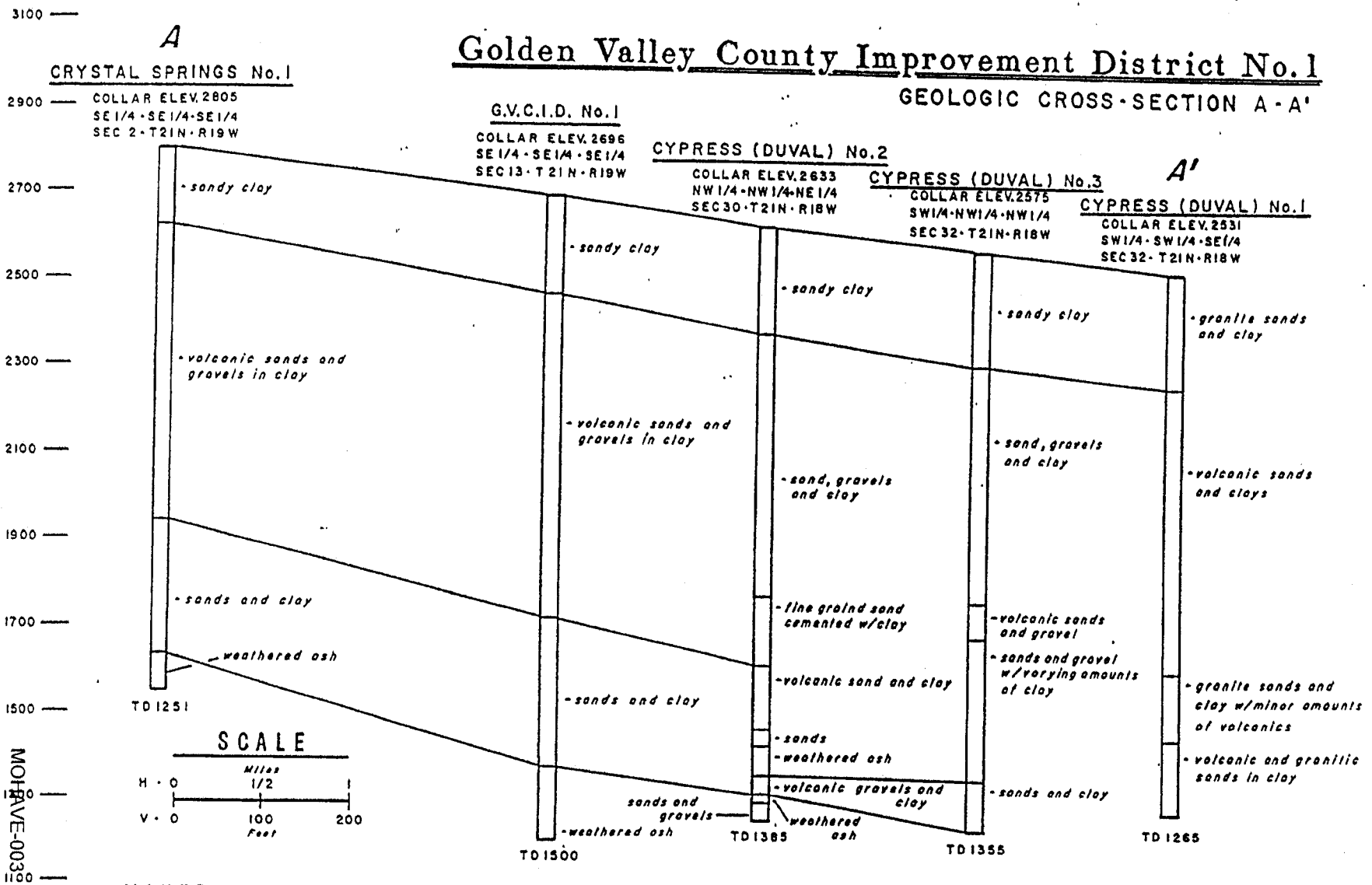

MOHAVE-0033

MANERA, INC.
Consultants in Water Resources

FIGURE 2

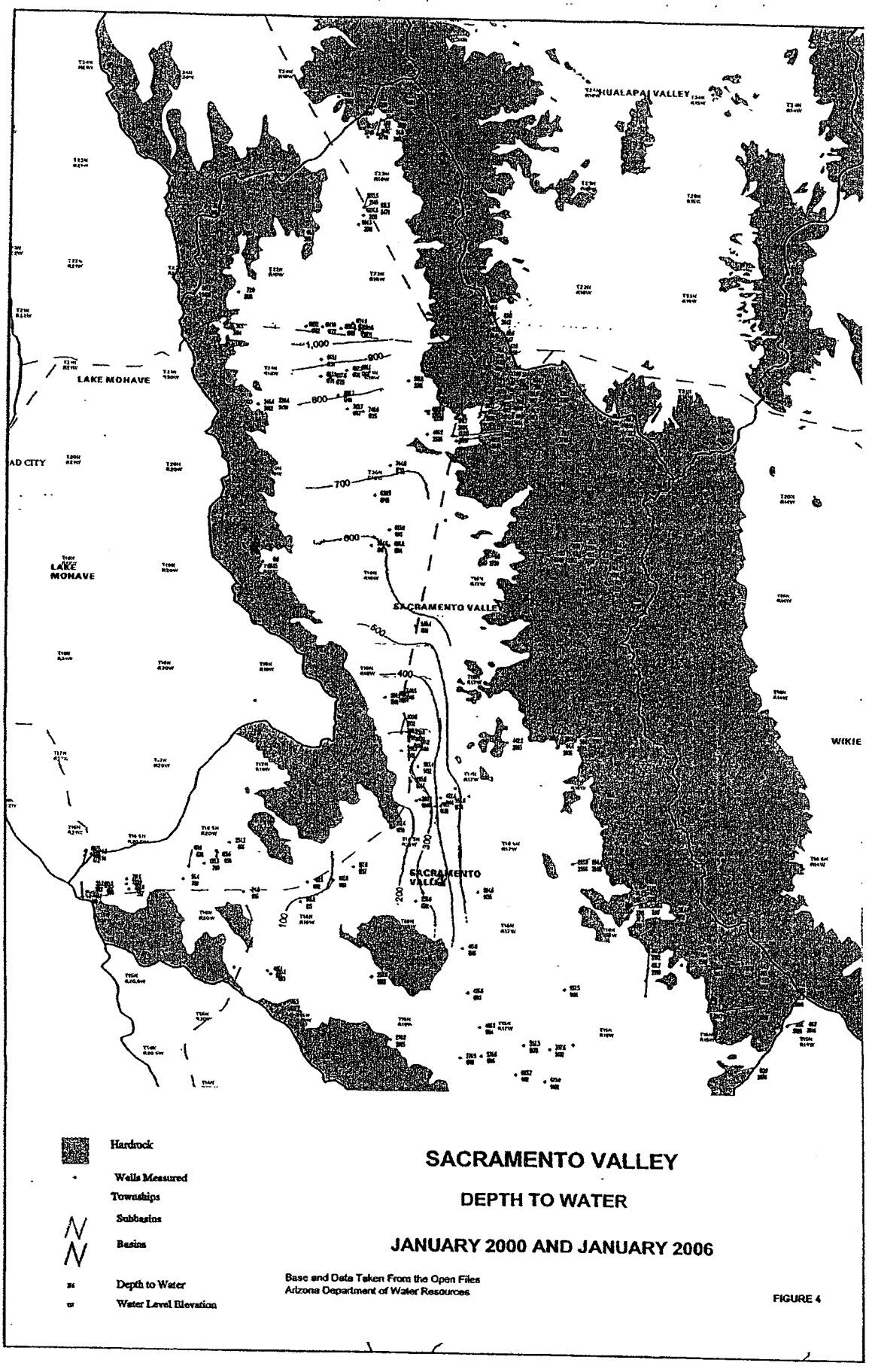
HUALAPAI VALLEY
LAKE MOHAVE
AD CITY
LAKE MOHAVE
SACRAMENTO VALLEY
WIKIE
SACRAMENTO VALLEY
1,000
800
800
700
600
600
400
300
200
100
Hardrock
Wells Measured
Townships
Subbasins
Basins
Depth to Water
Water Level Elevation
SACRAMENTO VALLEY
DEPTH TO WATER
JANUARY 2000 AND JANUARY 2006
Base and Data Taken From the Open Files
Arizona Department of Water Resources
FIGURE 4

GWSI Well Report and Hydrograph

AZ Dept of Water Resources

Local ID	Site ID	ADWR Reg. No.	Latitude	Longitude	Water Uses	Well Depth	Drill Date	Case Dia.	Latest WL Date	Depth to Water	WL Alt. above Mean Sea Level	Times Meas.
B-20-18 22AAC	350633114103701		35° 6' 33.59"	114° 10' 36.29"	UNUSED	779			5/11/2004	743.75	1751.25	95

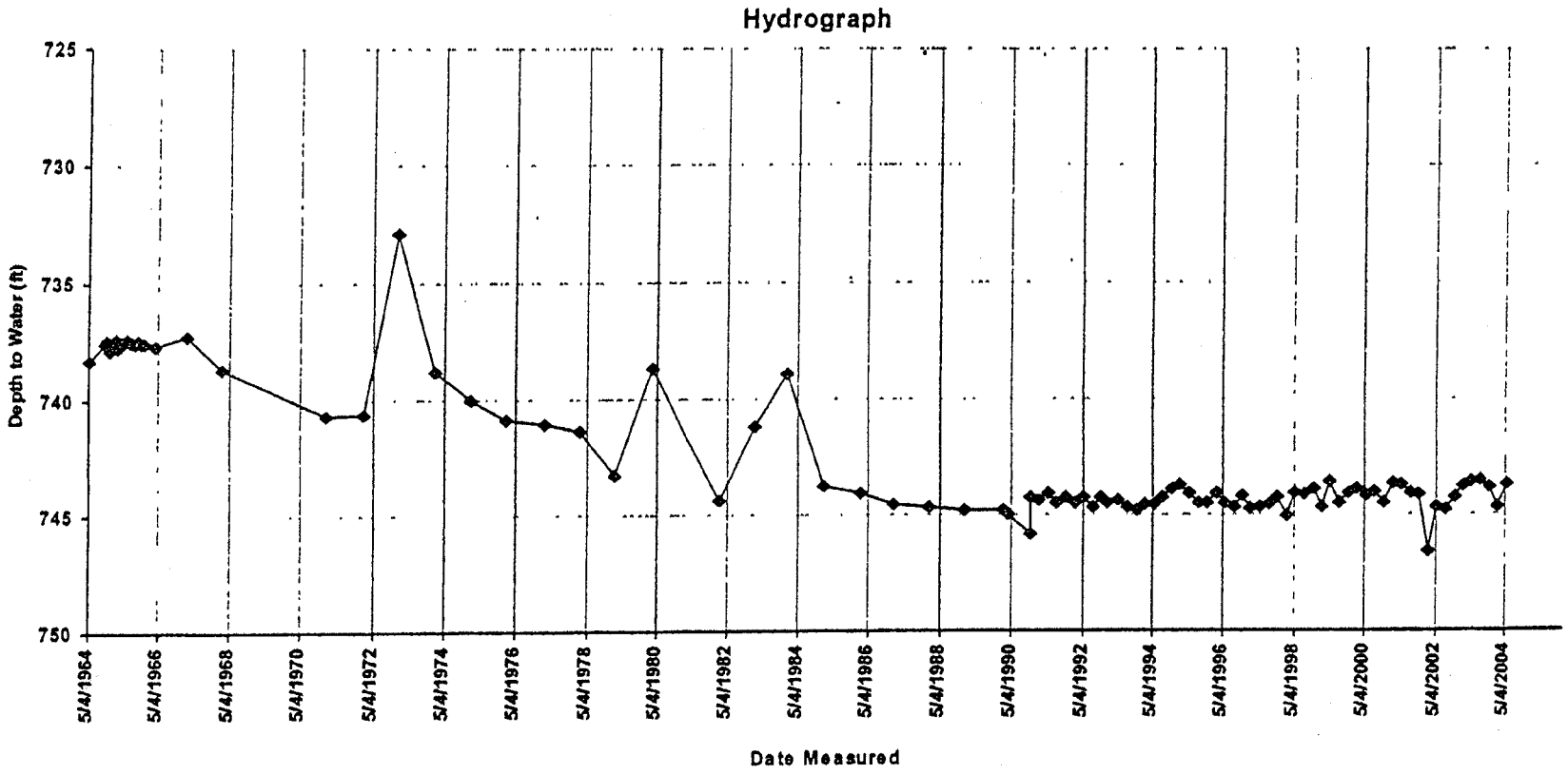

MOHAVE-BD

GWSI is ADWR's technical database of well locations, construction data, and water levels.

Thursday, October 26, 2006

FIGURE 5

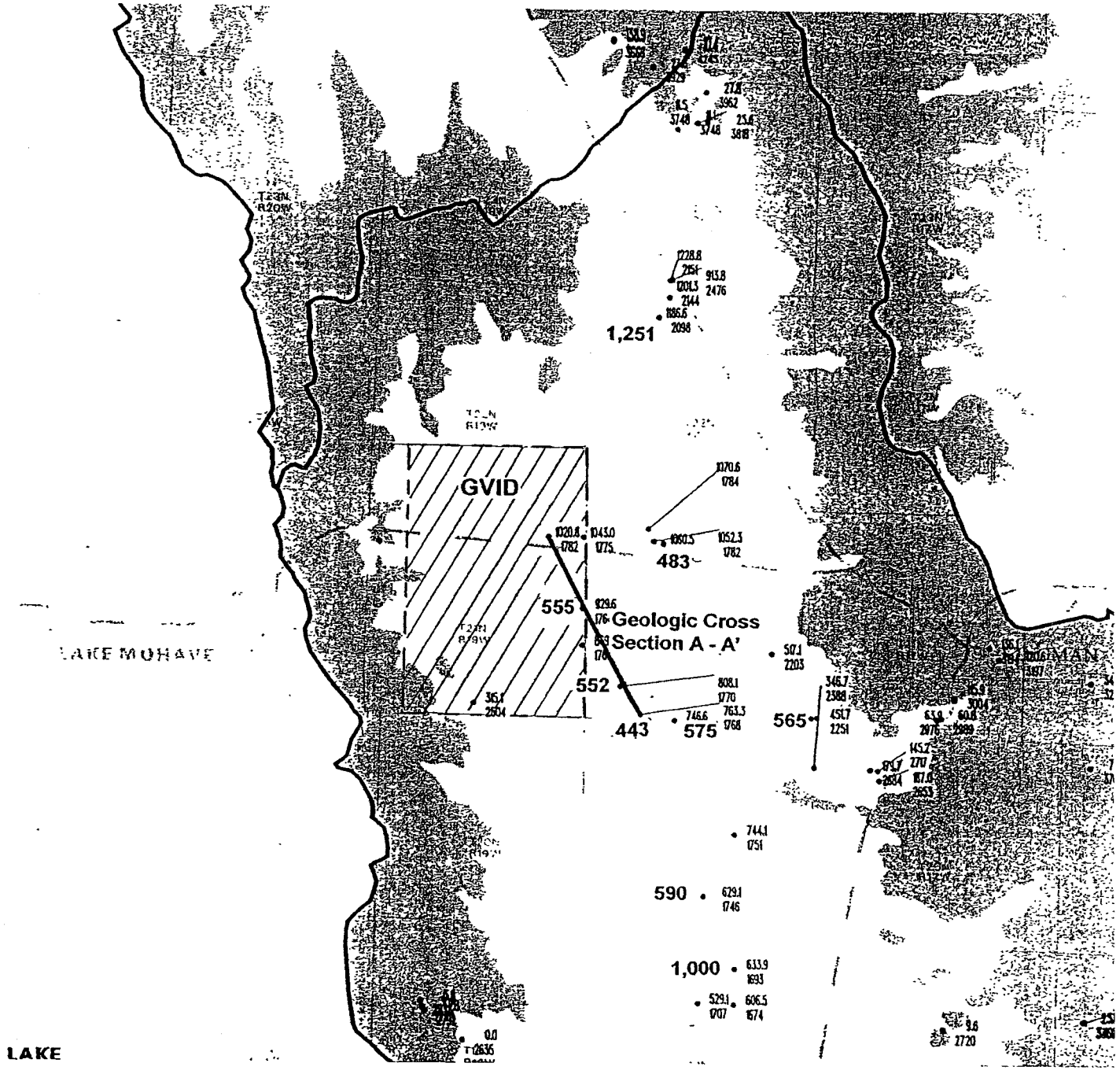

NORTHERN SACRAMENTO VALLEY

SHOWING MINIMUM THICKNESS OF SATURATED ALLUVIAL FILL

MINIMUM THICKNESS BECAUSE MANY WELL LOGS TERMINATE IN ALLUVIUM INDICATING GREATER THICKNESSES

443 Known Thickness
of saturated alluvial fill
In feet

Taken from ADWR
Open File Data

MOHAVE06

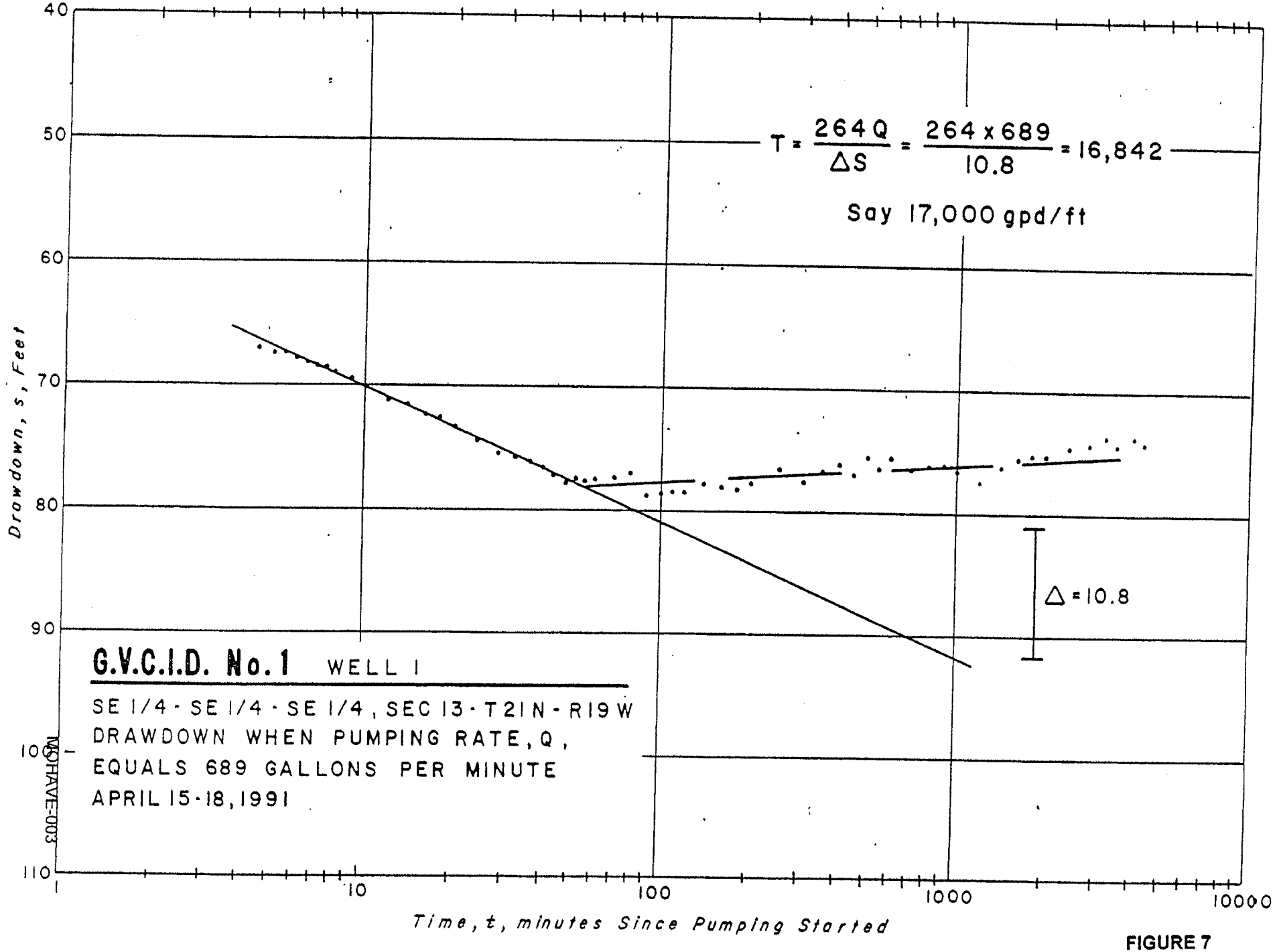
40
50
60
70
80
90
100
110
Drawdown, s, Feet
1
10
100
1000
10000
Time, t, minutes Since Pumping Started
$T = \frac{264Q}{\Delta S} = \frac{264 \times 689}{10.8} = 16,842$
Say 17,000 gpd/ft
Δ = 10.8
G.V.C.I.D. No. 1 WELL 1
SE 1/4 - SE 1/4 - SE 1/4, SEC 13 - T 21 N - R 19 W
DRAWDOWN WHEN PUMPING RATE, Q,
EQUALS 689 GALLONS PER MINUTE
APRIL 15-18, 1991
MOHAVE-003

FIGURE 7

PLATES 1 - 8

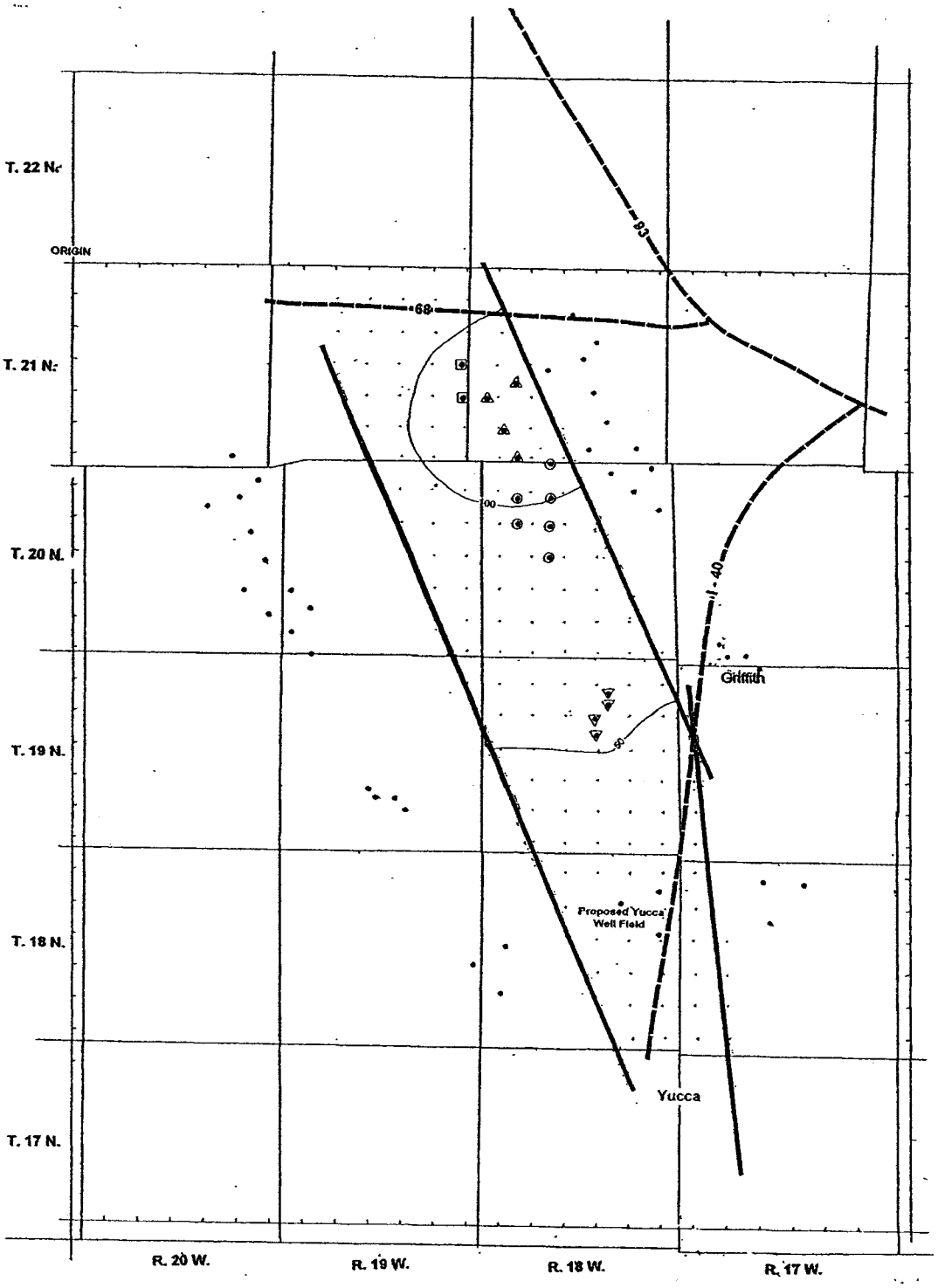

GOLDEN VALLEY IMPROVEMENT DISTRICT

WATER LEVEL DECLINES IN 100 YEARS

WHEN T = 46,000 gpd/ft and SY = .07

COMMITTED DEMAND:

GVID (1,400 ac/ft)
VALLEY PIONEER WATER COMPANY (2,811 ac/ft)
MINE CALL (3,000 ac/ft)

2007 - 2107

PLATE 1

MOHAVE-003

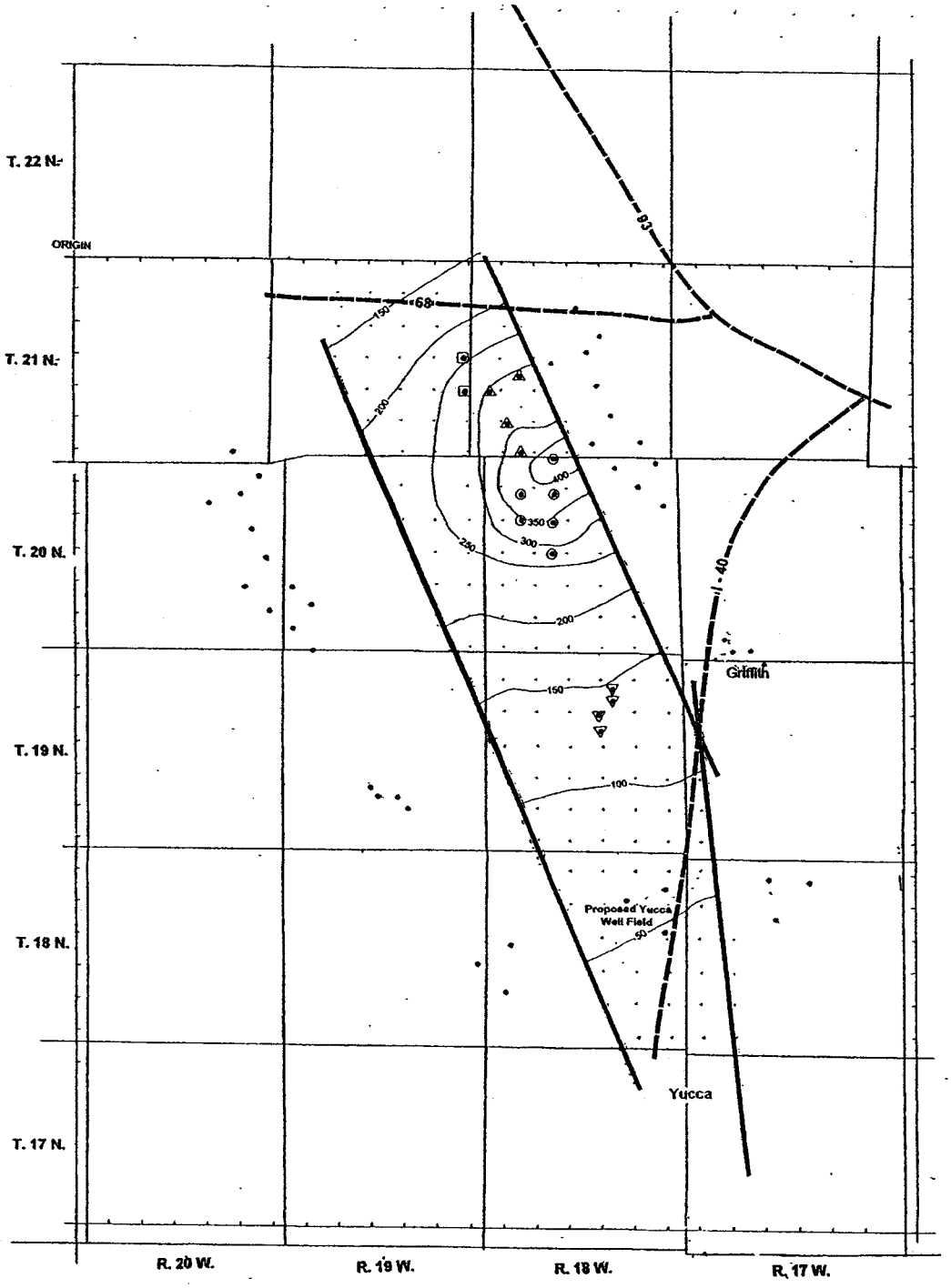

GOLDEN VALLEY IMPROVEMENT DISTRICT

WATER LEVEL DECLINES IN 100 YEARS

WHEN T = 46,000 gpd/ft and SY = .07

COMMITTED DEMAND:

GVID (1,400 ac/ft)
VALLEY PIONEER WATER COMPANY (2,811 ac/ft)
MINE CALL (3,000 ac/ft)

REQUESTED DEMAND:

RHODES GOLDEN VALLEY SOUTH (9,000 ac/ft),

2007 - 2107

PLATE 3

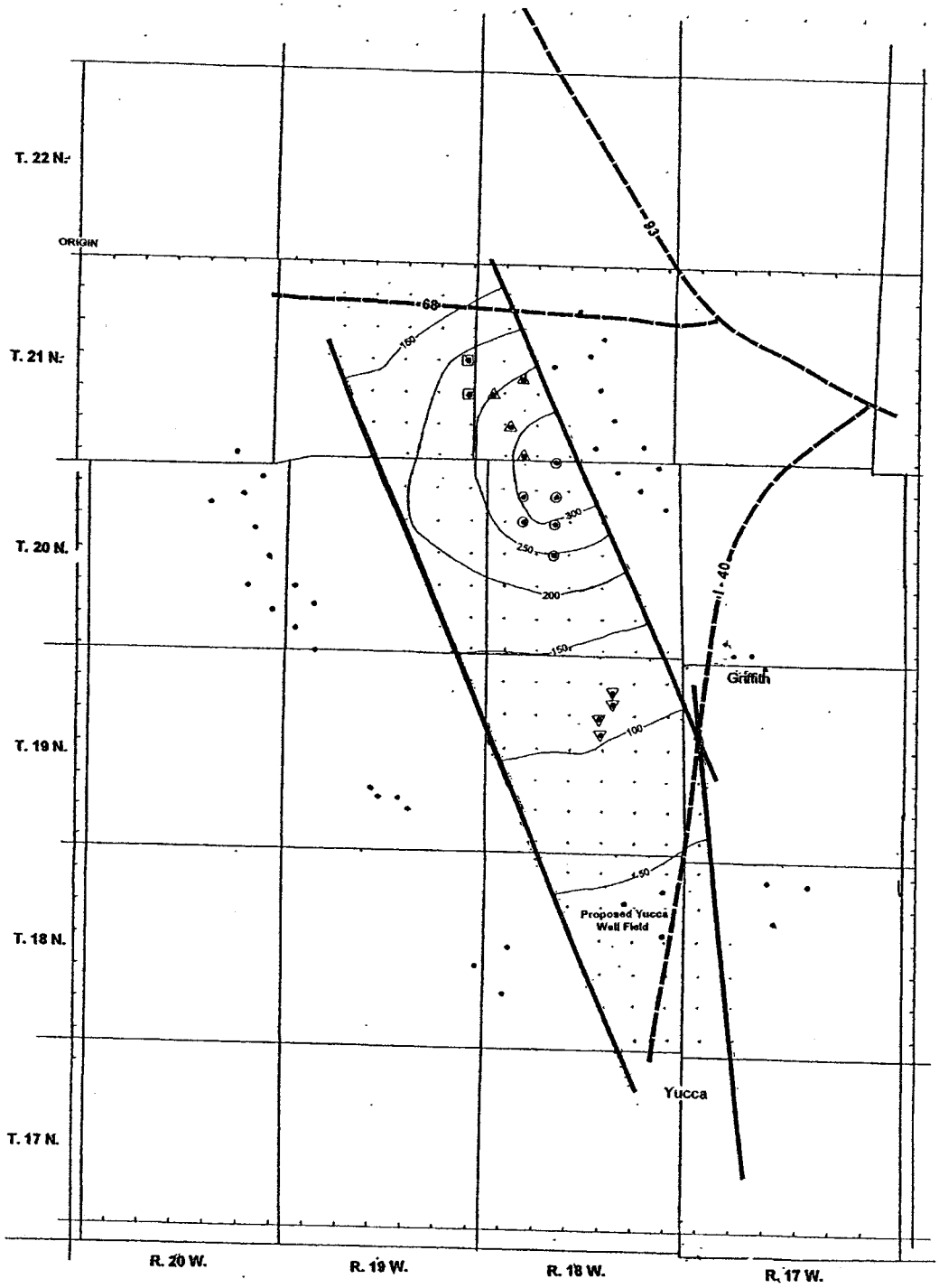

Legend

- G.V.I.D. Wells
- Valley Pioneer Water Company Wells
- Rhodes Golden Valley South Wells
- I - 40 Corridor Wells
- Yucca (theoretical) Wells
- Hydrologic (Model) Boundaries
- Highways

N

0 1 2 3 4
Scale, miles

GOLDEN VALLEY IMPROVEMENT DISTRICT

WATER LEVEL DECLINES IN 100 YEARS

WHEN T = 46,000 gpd/ft and SY = .09

COMMITTED DEMAND:

GVID (1,400 ac/ft)
VALLEY PIONEER WATER COMPANY (2,811 ac/ft)
MINE CALL (3,000 ac/ft)

REQUESTED DEMAND:

RHODES GOLDEN VALLEY SOUTH (9,000 ac/ft),

2007 - 2107

PLATE 4

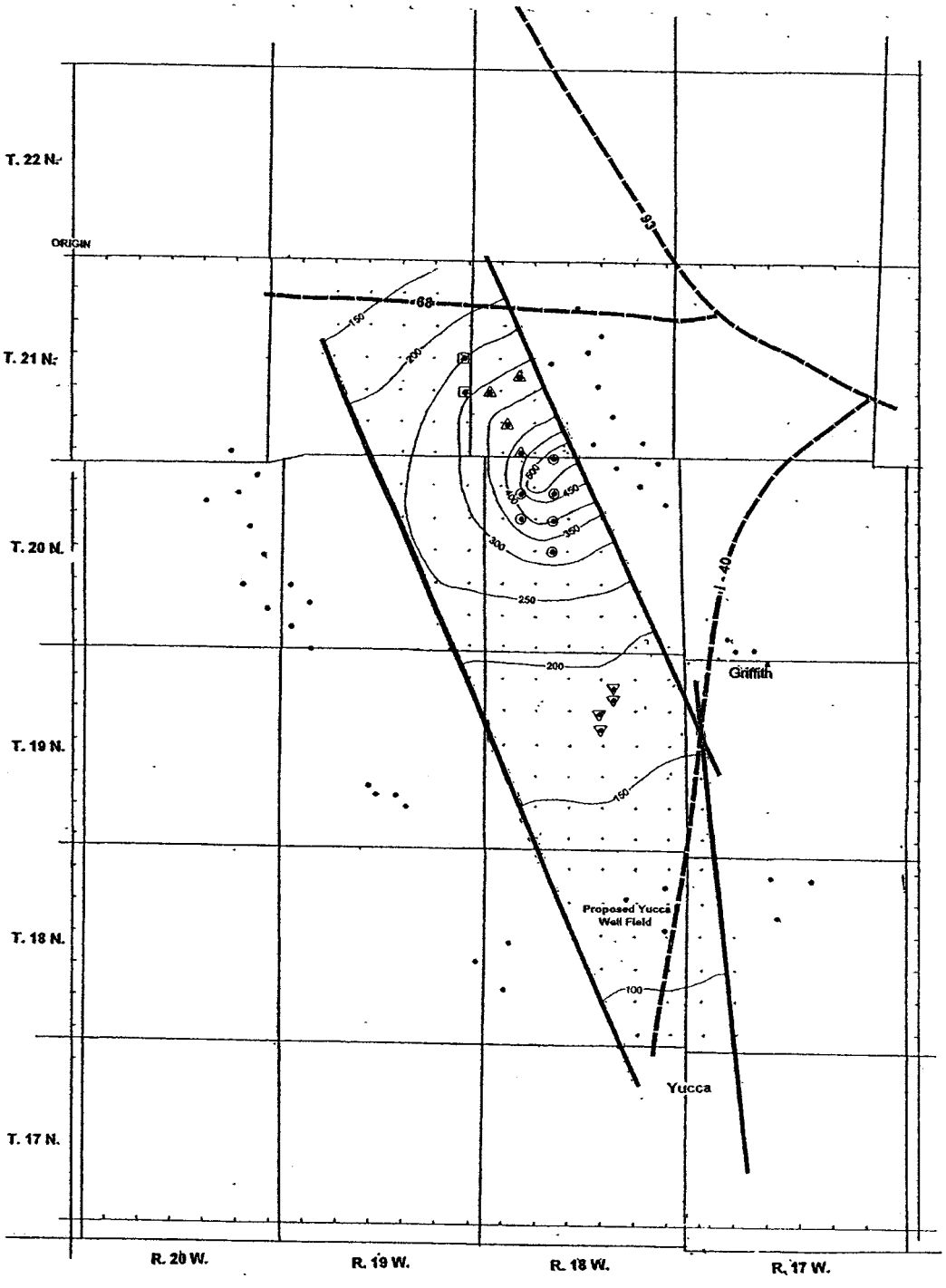

Legend

- G.V.I.D. Wells
- Valley Pioneer Water Company Wells
- Rhodes Golden Valley South Wells
- I - 40 Corridor Wells
- Yucca (theoretical) Wells
- Hydrologic (Model) Boundaries
- Highways

N

0 1 2 3 4

Scale, miles

GOLDEN VALLEY IMPROVEMENT DISTRICT

WATER LEVEL DECLINES IN 100 YEARS

WHEN T = 46,000 gpd/ft and SY = .07

COMMITTED DEMAND:

GVID (1,400 ac/ft)
VALLEY PIONEER WATER COMPANY (2,811 ac/ft)
MINE CALL (3,000 ac/ft)

REQUESTED DEMAND:

RHODES GOLDEN VALLEY SOUTH (9,000 ac/ft),
YUCCA [GVID] (4000 ac/ft)

2007 - 2107

PLATE 5

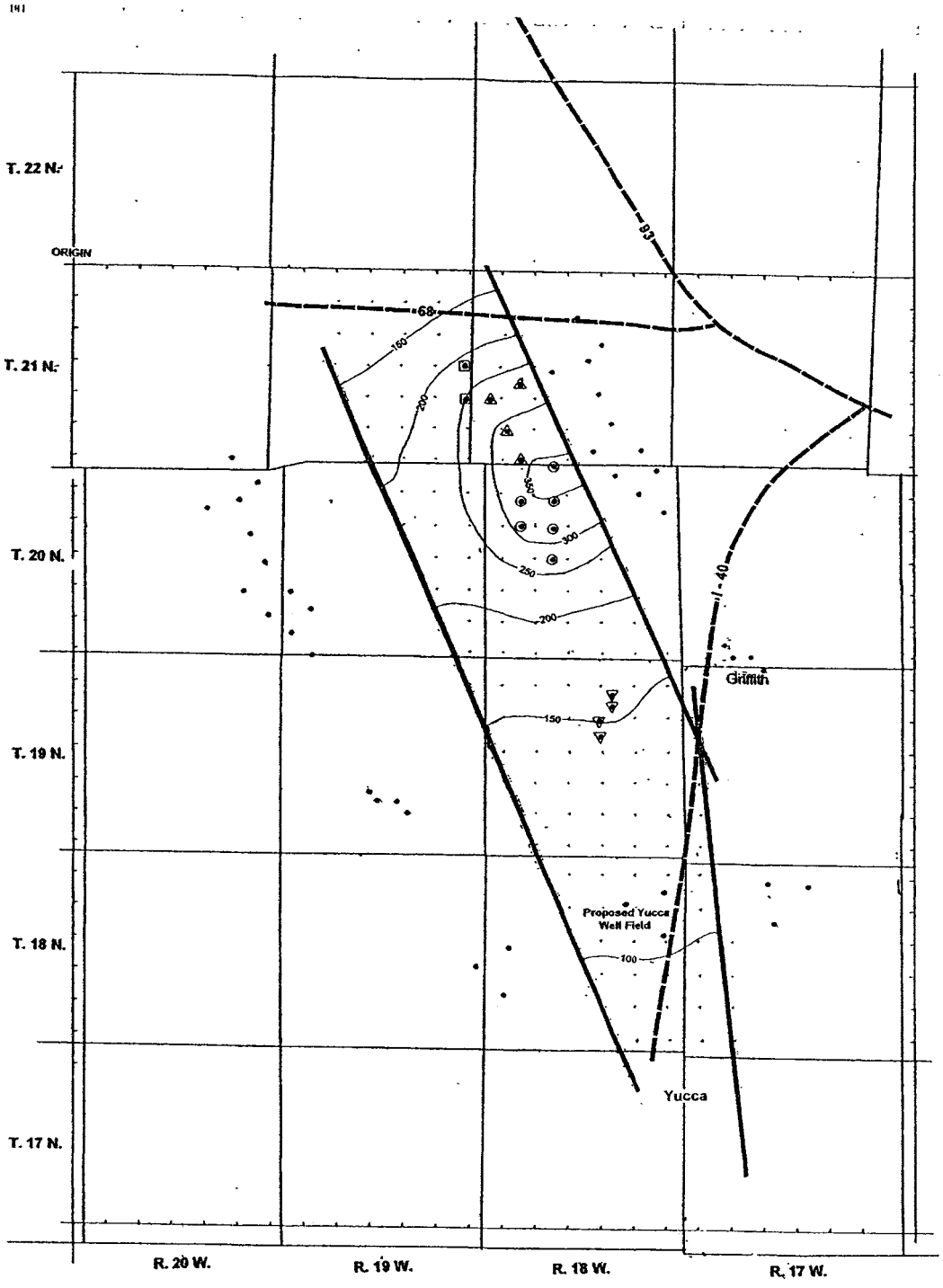

Legend

- G.V.I.D. Wells
- Valley Pioneer Water Company Wells
- Rhodes Golden Valley South Wells
- I - 40 Corridor Wells
- Yucca (theoretical) Wells
- Hydrologic (Model) Boundaries
- Highways

N

0 1 2 3 4

Scale, miles

GOLDEN VALLEY IMPROVEMENT DISTRICT

WATER LEVEL DECLINES IN 100 YEARS

WHEN T = 46,000 gpd/ft and SY = .09

COMMITTED DEMAND:

GVID (1,400 ac/ft)
VALLEY PIONEER WATER COMPANY (2,811 ac/ft)
MINE CALL (3,000 ac/ft)

REQUESTED DEMAND:

RHODES GOLDEN VALLEY SOUTH (9,000 ac/ft),
YUCCA [GVID] (4000 ac/ft)

2007 - 2107

PLATE 6

MOHAVE-003

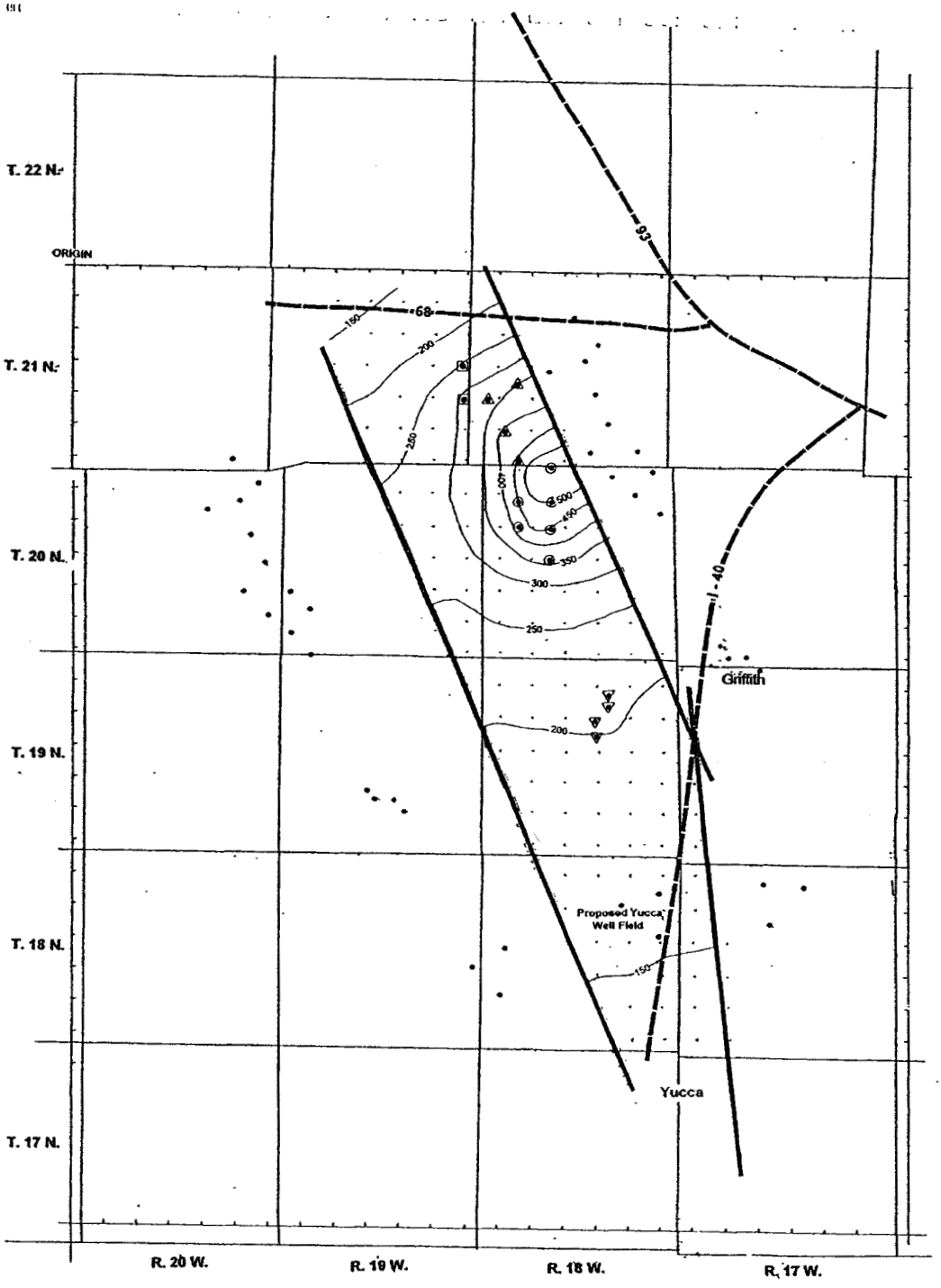

GOLDEN VALLEY IMPROVEMENT DISTRICT

WATER LEVEL DECLINES IN 100 YEARS

WHEN T = 46,000 gpd/ft and SY = .07

COMMITTED DEMAND:

GVID (1,400 ac/ft)
VALLEY PIONEER WATER COMPANY (2,811 ac/ft)
MINE CALL (3,000 ac/ft)

REQUESTED DEMAND:

RHODES GOLDEN VALLEY SOUTH (9,000 ac/ft),
YUCCA [GVID] (6000 ac/ft)

2007 - 2107

PLATE 7

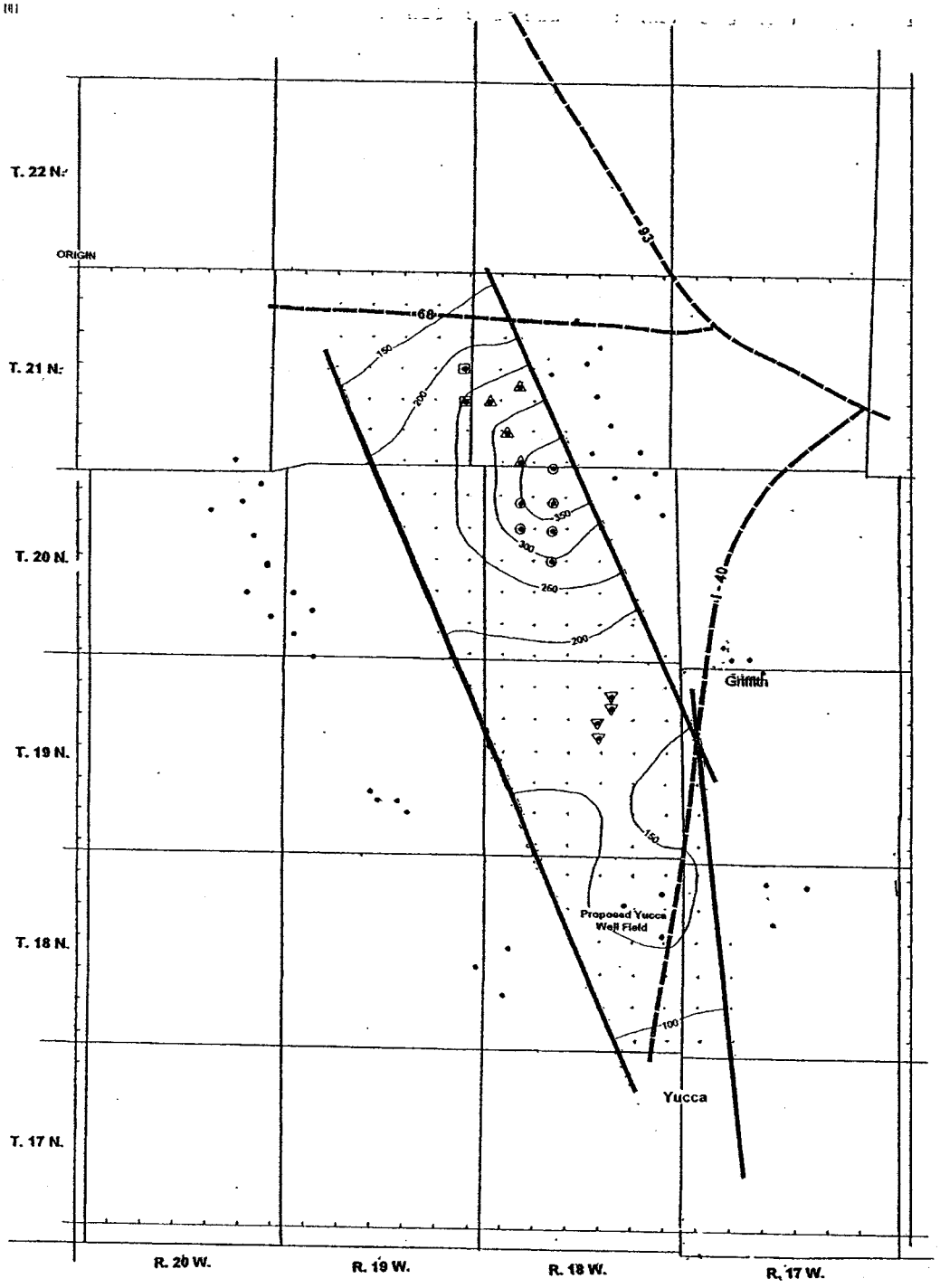

GOLDEN VALLEY IMPROVEMENT DISTRICT

WATER LEVEL DECLINES IN 100 YEARS

WHEN T = 46,000 gpd/ft and SY = .09

COMMITTED DEMAND:

GVID (1,400 ac/ft)
VALLEY PIONEER WATER COMPANY (2,811 ac/ft)
MINE CALL (3,000 ac/ft)

REQUESTED DEMAND:

RHODES GOLDEN VALLEY SOUTH (9,000 ac/ft),
YUCCA [GVID] (6000 ac/ft)

2007 - 2107

PLATE 8

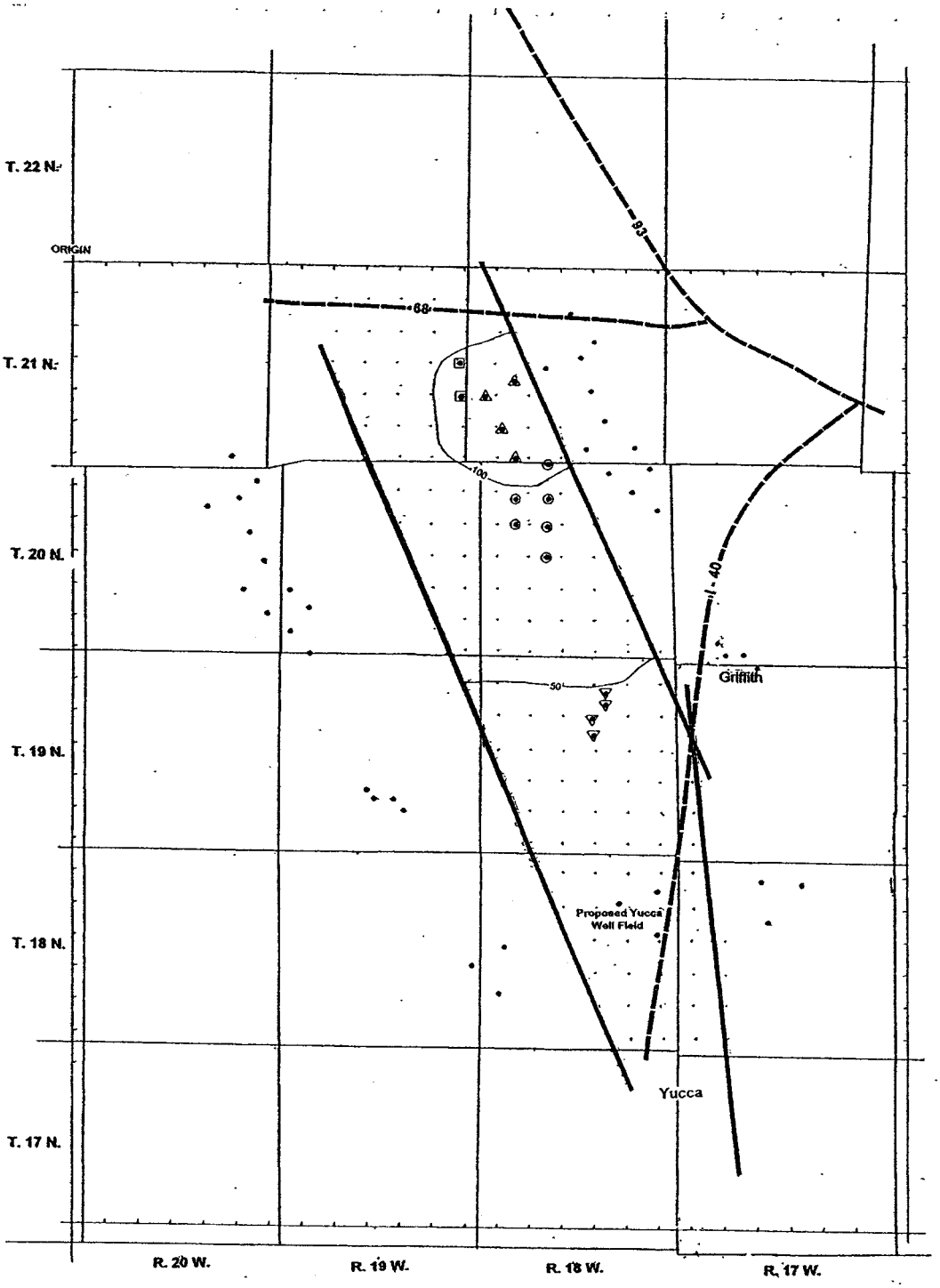

GOLDEN VALLEY IMPROVEMENT DISTRICT

WATER LEVEL DECLINES IN 100 YEARS

WHEN T = 46,000 gpd/ft and SY = .09

COMMITTED DEMAND:

GVID (1,400 ac/ft)
VALLEY PIONEER WATER COMPANY (2,811 ac/ft)
MINE CALL (3,000 ac/ft)

2007 - 2107

PLATE 2

REFERENCES:

References of available and relatively recent engineering and/or hydrogeologic studies of the Sacramento Valley Groundwater Basin, Mohave County, Arizona

Manera, P. A., 2006, Hydrologic Evaluation, Sacramento Valley, Golden valley County improvement district No. 1, dated November 23, 2006

Manera, P. A., 1998, Preliminary Hydrogeologic Evaluation, Griffith Energy Well Field, dated August 3, 1998

ADWR, 1994, Arizona Department of Water resources, Staff Report on Kingman Area Water Supply and Demand, dated Marc 24, 1994

Manera, P. A., 1991, Hydrogeologic Evaluation of Golden Valley, revised report dated August 29, 1991

It is to be noted that a comprehensive study of the Groundwater Basin is being performed by the USGS, which will provide much more accurate information based on actual field tests and measurements.

SOME OF THE SIGNIFICANT FINDINGS OF THE ABOVE REFERENCED REPORTS

Manera, P. A., 2006:

Manera's most recent report is based on available data and assumptions to assess the hydrologic/hydrogeologic conditions of the Sacramento Valley Basin aquifer. The input data and assumptions used by Manera are consistent with his referenced earlier reports.

As a result of commercial and residential developments in the past decade, the groundwater withdrawal rates and predictions have significantly changed in the region since the earlier reports.

The report concludes that the Sacramento Valley Basin is capable of yielding the following total quantities of water:

- 1,400 ac-ft/yr Golden Valley Improvement District
- 2,810 ac-ft/yr Valley Pioneer Water Company
- 3,000 ac-ft/yr Mine Call (Copper Mine at Mineral Park Road)
- 1,239 ac-ft/yr I-40 Industrial Corridor
- 9,000 ac-ft/yr Golden Valley 5800
- 6,000 ac-ft/yr Golden Valley Improvement District, pending application at ADWR

Total of 23,449 ac-ft/yr

ADWR, 1994

The ADWR evaluated the hydrologic data available in 1994 and established the available groundwater supply and withdrawal demand. According to the report, the available groundwater in the Sacramento Valley aquifer is as follows:

- 4,000 ac-ft/yr in the Golden Valley, defined as an area 8 Miles north and south of SR 86 across the entire basin.
- 16,000 ac-ft/yr in the area extending from 8 miles south of SR68 to Yucca.

Total of 20,000 ac-ft/year

NOTES:

The referenced existing studies appear to present the best available information on the Sacramento Valley groundwater aquifer to date. Due to the lack of adequate data to conclusively define the aquifer conditions, the reports had to rely on some assumptions as stated therein.

Some of the significant assumptions of the referenced reports are listed below, which may have an impact on the findings.

- Manera assumed approximately 4,000 acre feet per year outflow from the Basin based on very limited available data.
- Manera further assumed that the Basin is in equilibrium, and the recharge equals the outflow from the Basin.
- Based on the above two assumptions, the recharge of the basin is estimated as approximately 4,000 acre feet per year.
- Manera stated that the majority of the basin's recharge occurs as a runoff of the Hualapai Mountains. This may have only a limited effect on the northern portion of the Sacramento Valley Basin, which is located cross-gradient and up-gradient from the Hualapai Mountains. The effect of this recharge on the area around SR 68 and the I-40 Water System has not been evaluated in detail.
- The Mine at Mineral Park Road has a current agreement to use 3,000 acre feet per year, which is reflected in Manera, P. A., 2006. However, a consultants report by Morrison –Maierle, Inc., dated September 2006, indicated the Mine making a request of Valley Pioneers Water Company to provide them with 10,000 acre feet per year for the next 33 years.

Northwest Arizona Rural Watershed Initiative Program: Progress & Products

EXHIBIT
M-4
admitted

In cooperation with ADWR and Mohave County

USGS

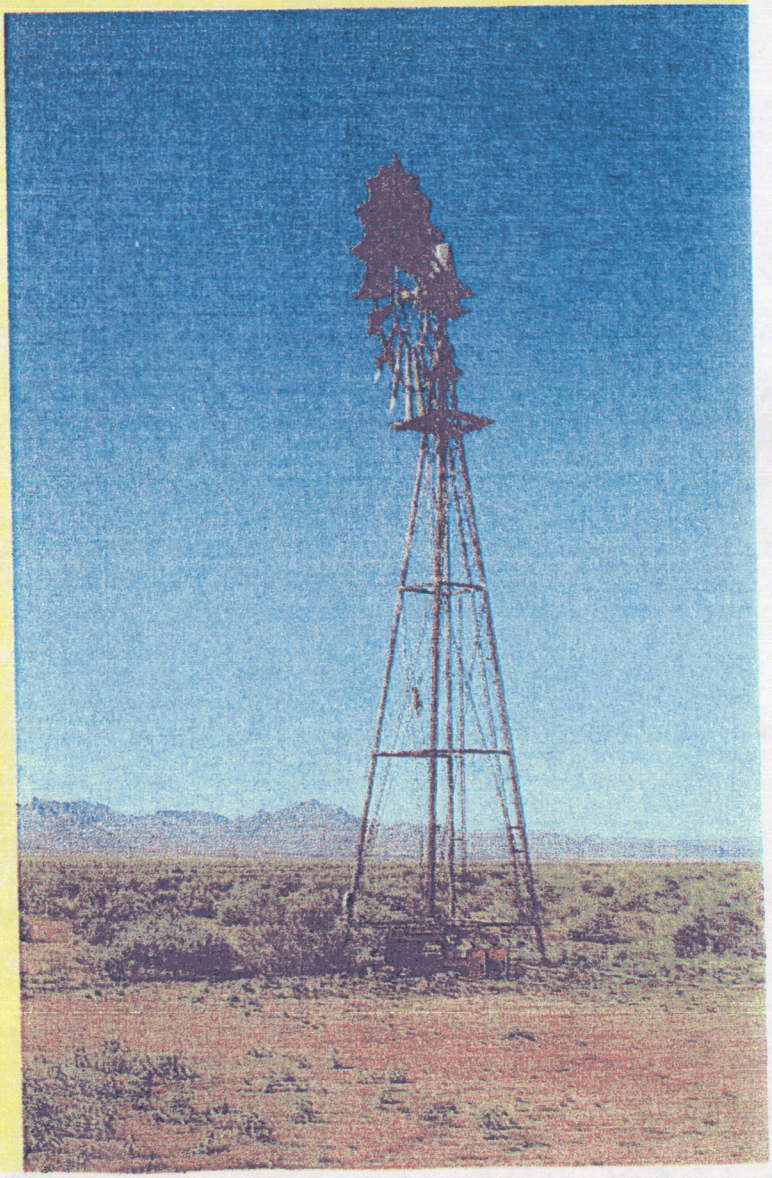

Presented by David Anning at the Mohave County Board of Supervisors Meeting
April 16, 2007

Study Area

USGS

MOHAVE-004

Project Objectives

- Improve the understanding of the ground-water system in Detrital, Hualapai, and Sacramento Valleys:
  - Hydrogeologic framework
  - Ground-water occurrence and movement
  - Ground-water budget and storage estimates

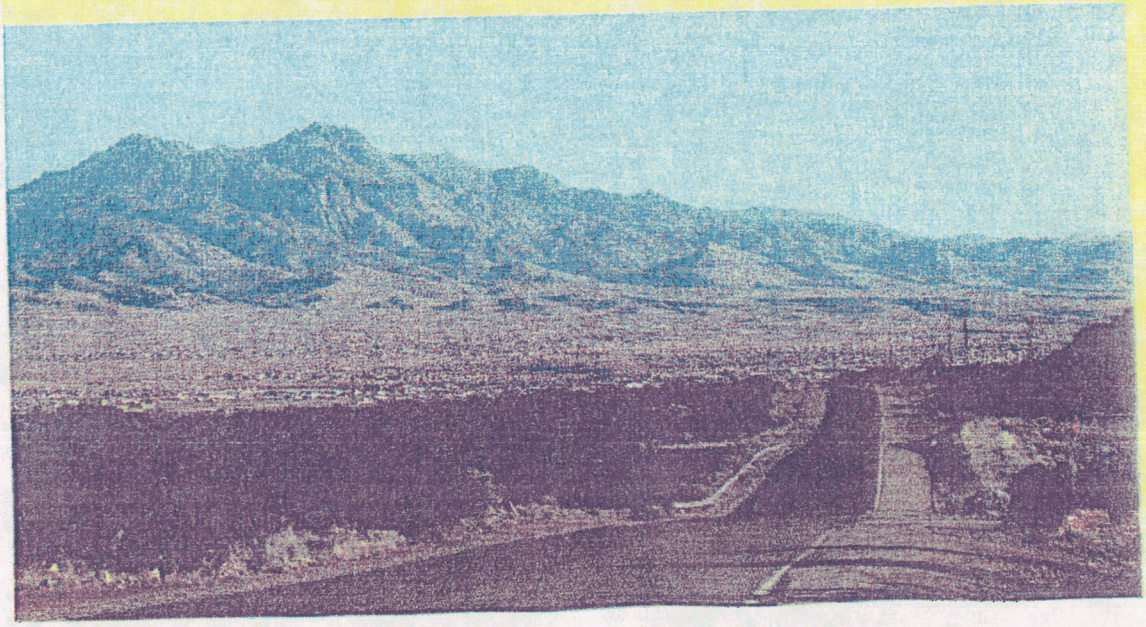

USGS

Knowledge gained in this project about the ground-water system will help:

- Water adequacy certificates (100-year water supply)
- Water-project designing
- Basin-scale water-supply planning
- Ground-water models

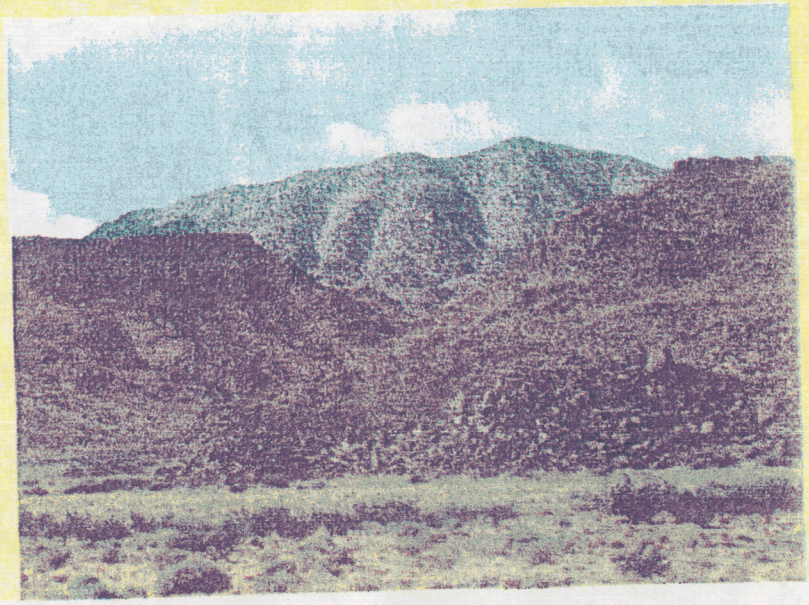

USGS

Hydrogeologic Framework

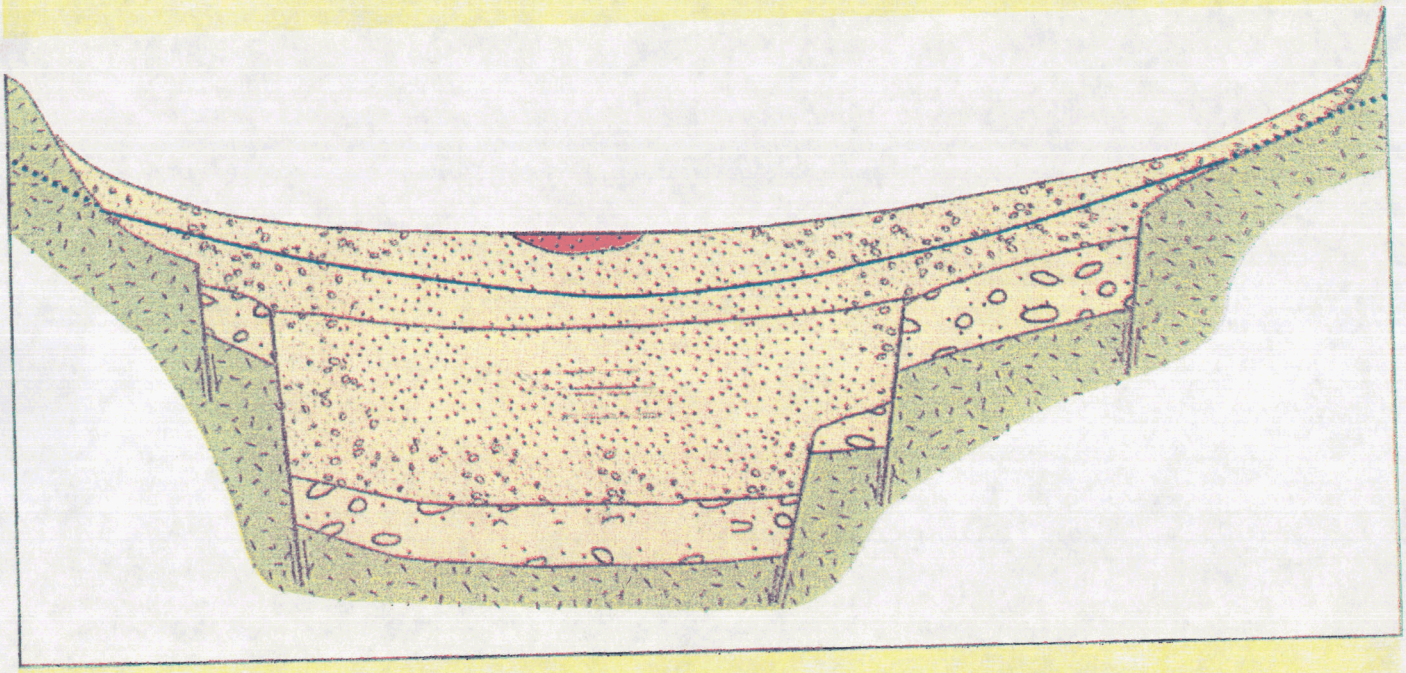

Information sources:

- Driller's logs
- Time-domain electromagnetic (TEM) surveys
- Gravity surveys

USGS

Drillers Logs

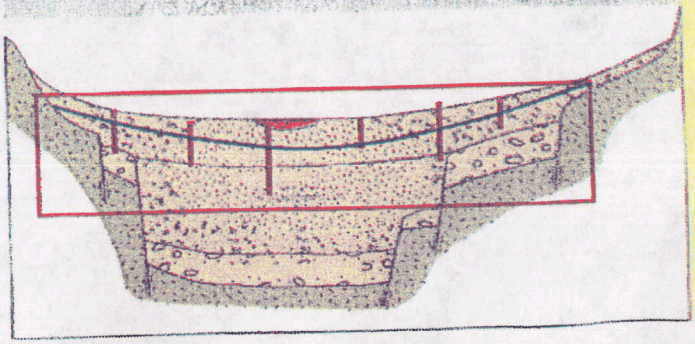

Depth below land surface

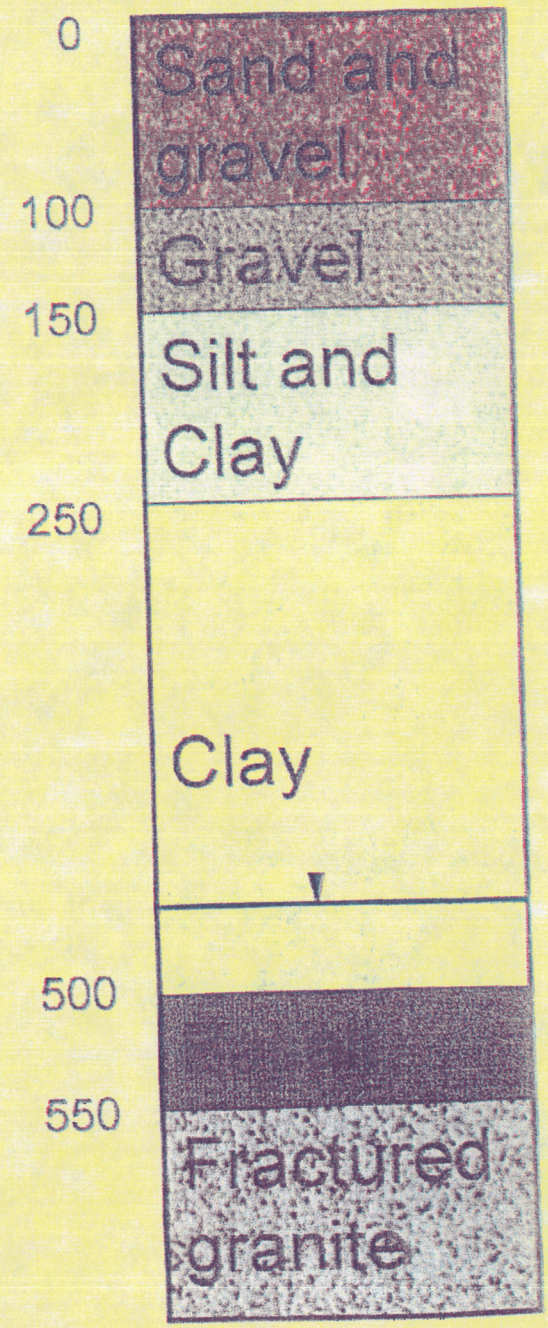

USGS

MOHAVE-004

Airborne TEM Surveys

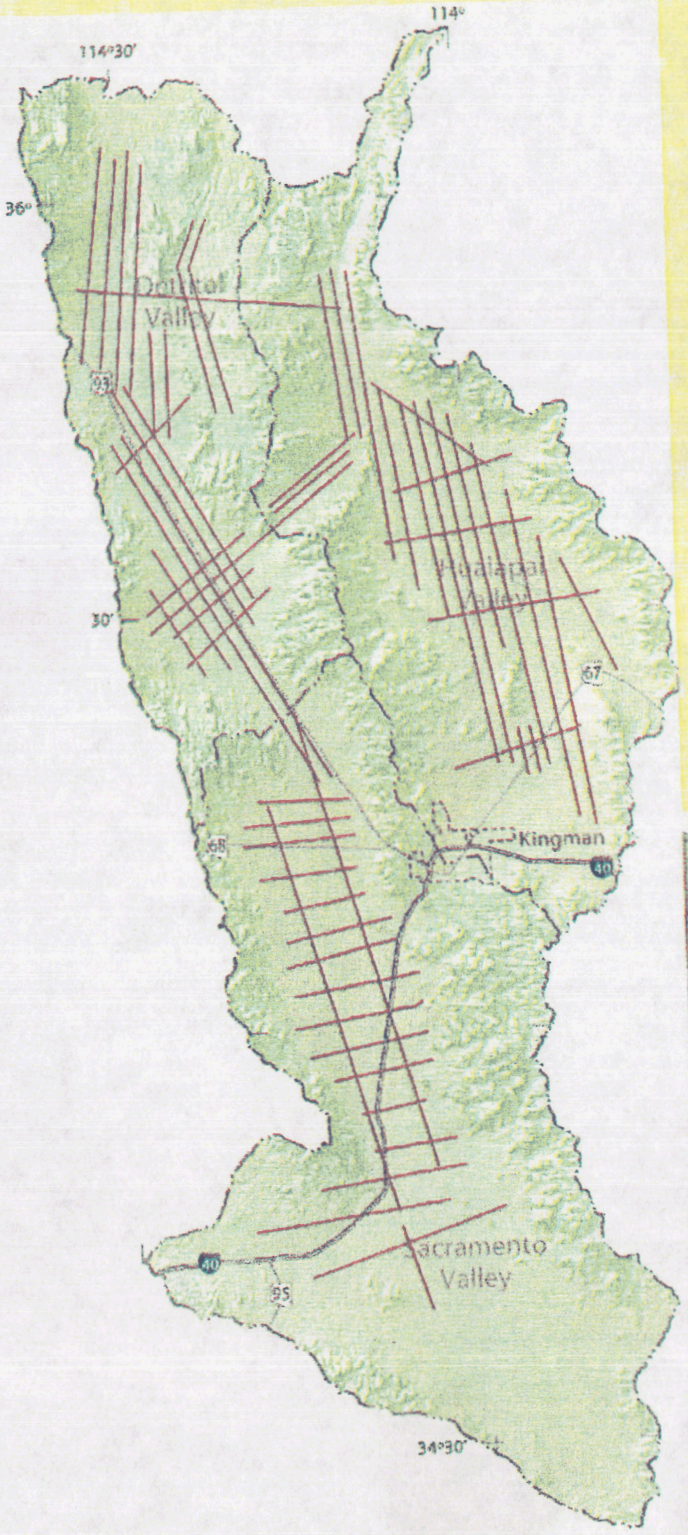

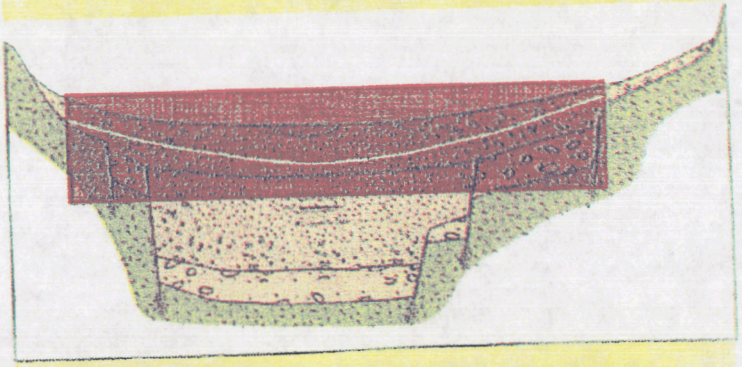

USGS

MOHAVE-004

Airborne TEM Surveys

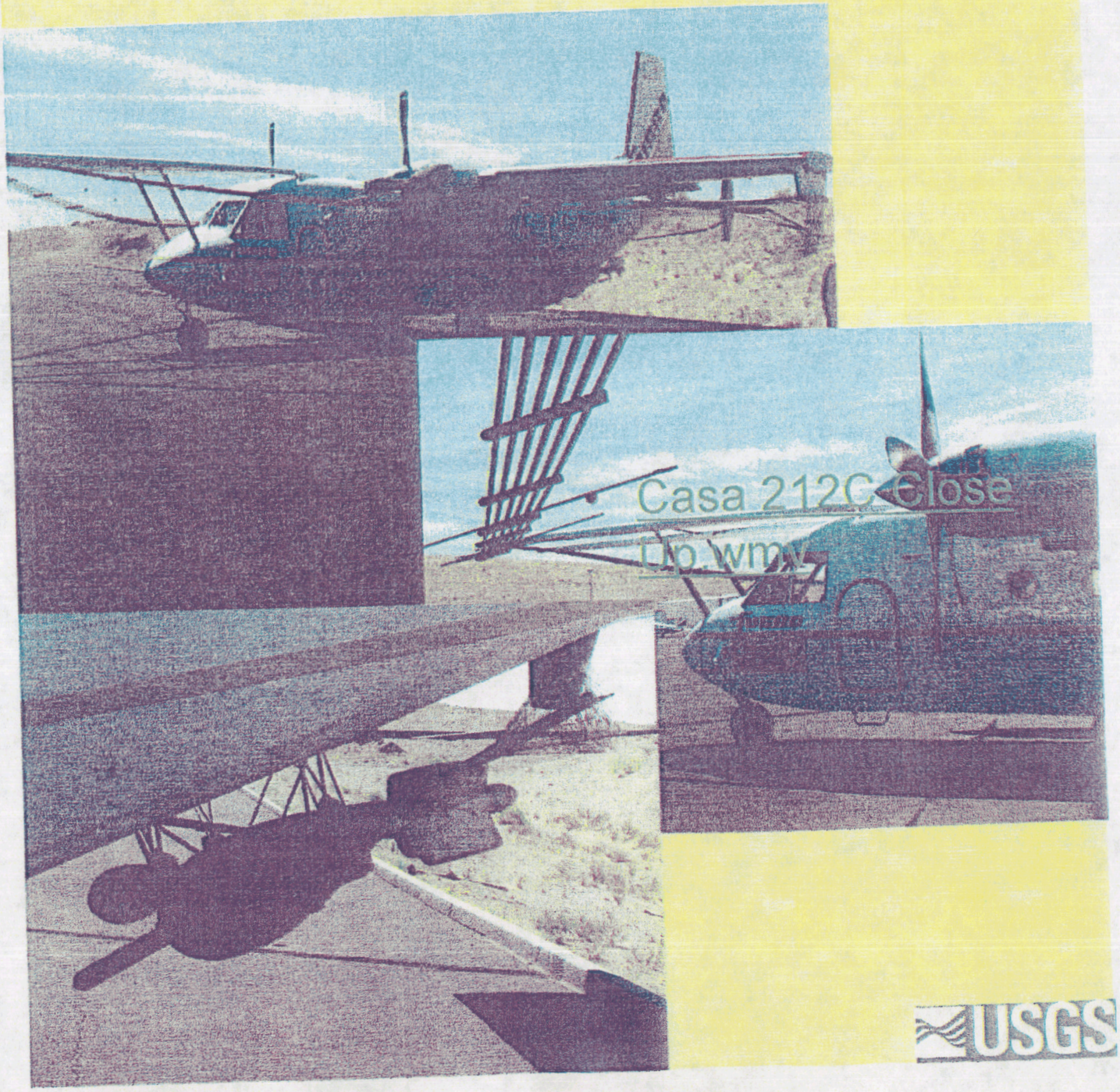

USGS

MOHAVE-004

Hualapai Valley–Preliminary

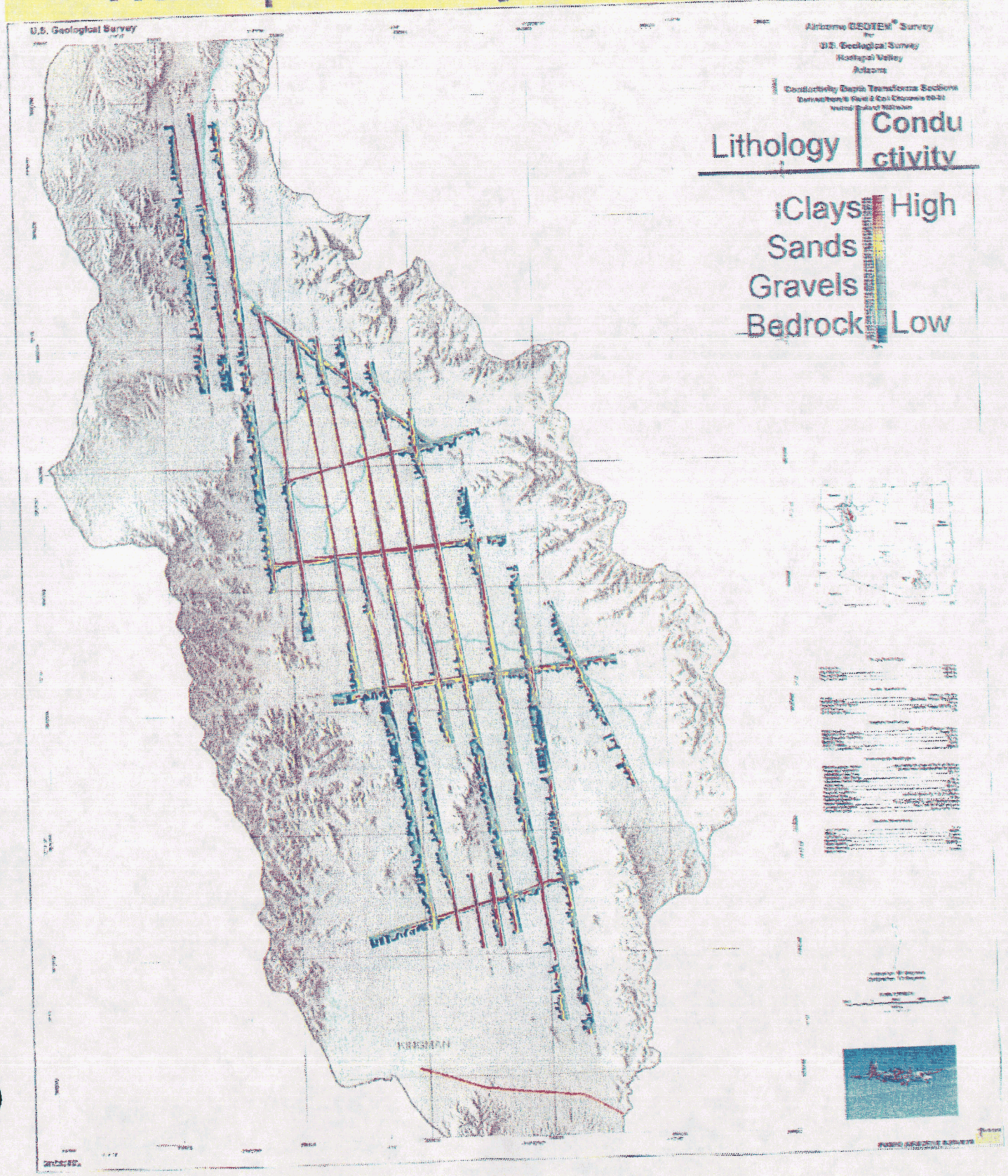

MOHAVE-004

Ground-Based TEM Surveys

- Deep surveys
- Locations unable to fly

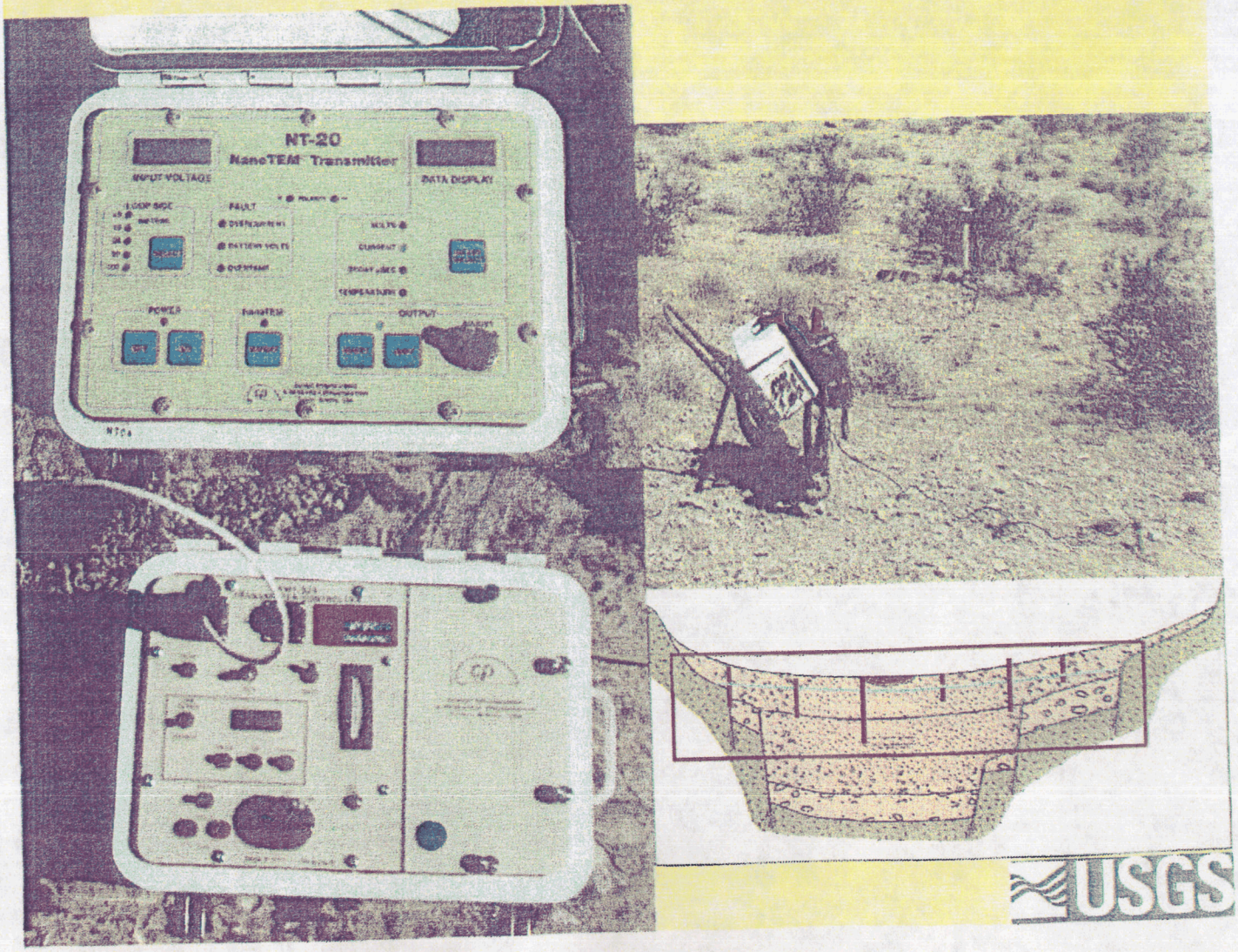

USGS

Gravity Surveys

- Model basin-fill thickness

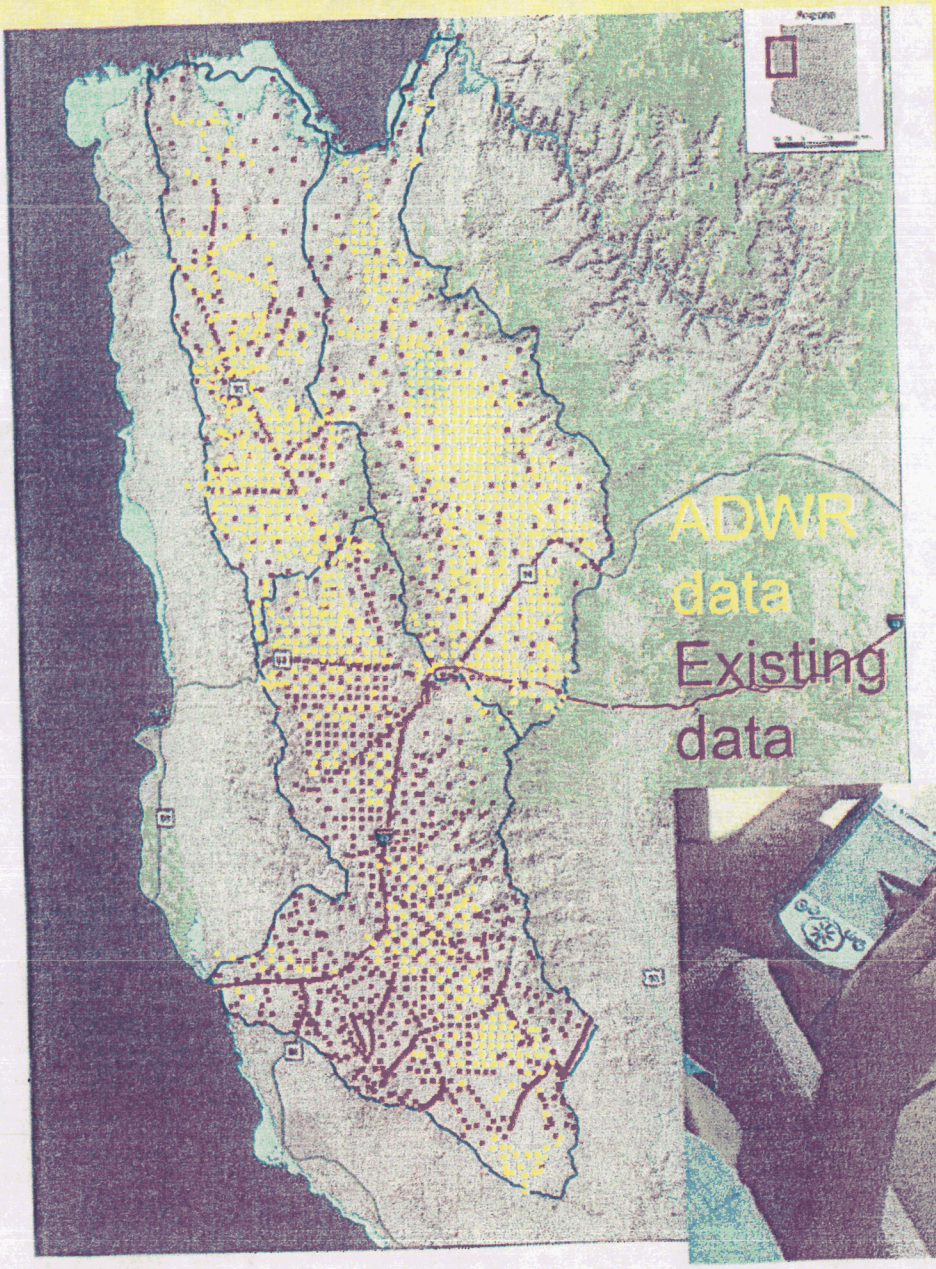

1:500,000

USGS

MOHAVE-004

Gravity Surveys

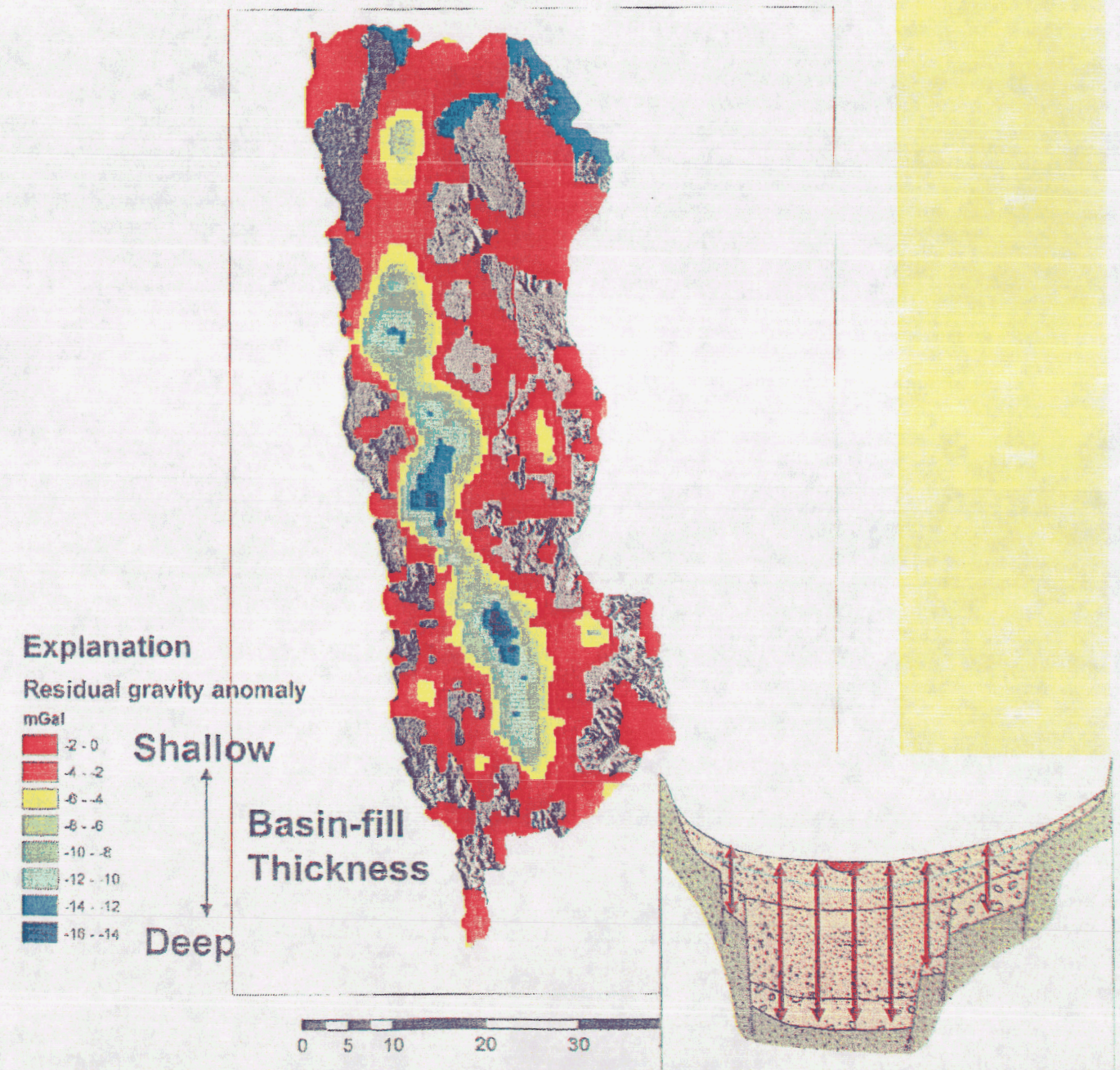

Residual Bouguer Gravity Anomaly for Detrital Basin

USGS

MOHAVE-004

Hydrogeologic Framework Model

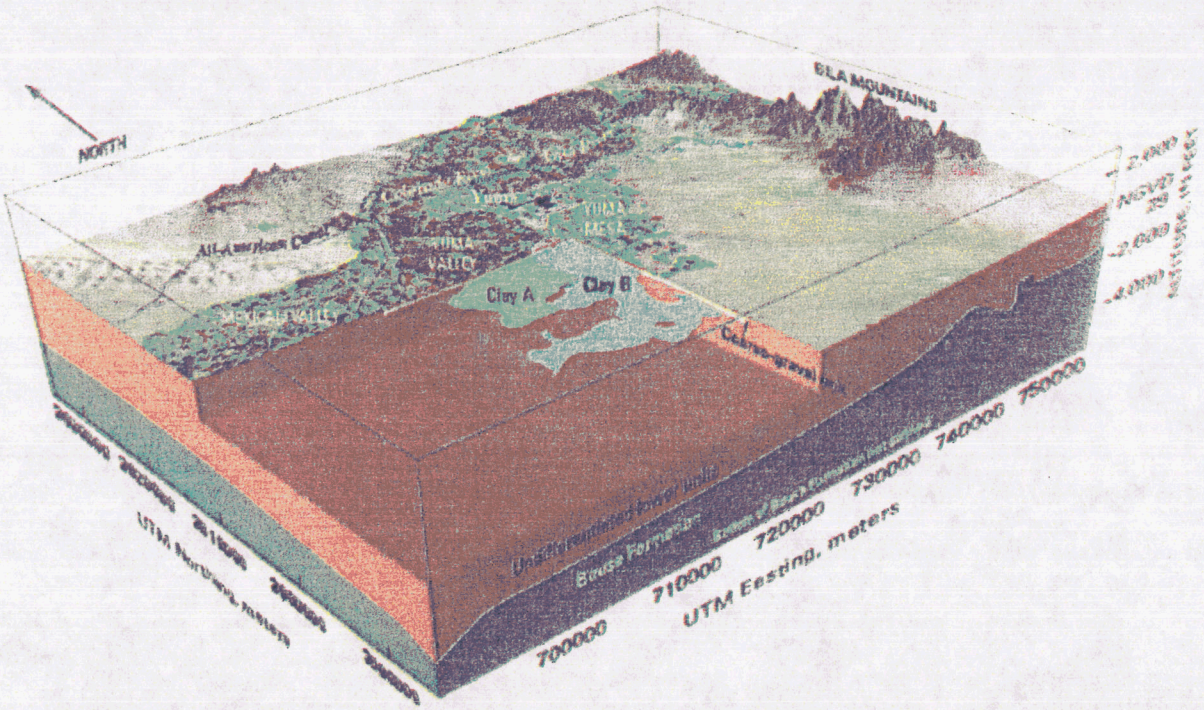

USGS

MOHAVE-004

Ground-Water Occurrence and Movement

- Ground-water levels
- Ground-water age estimates
- Ground-water quality

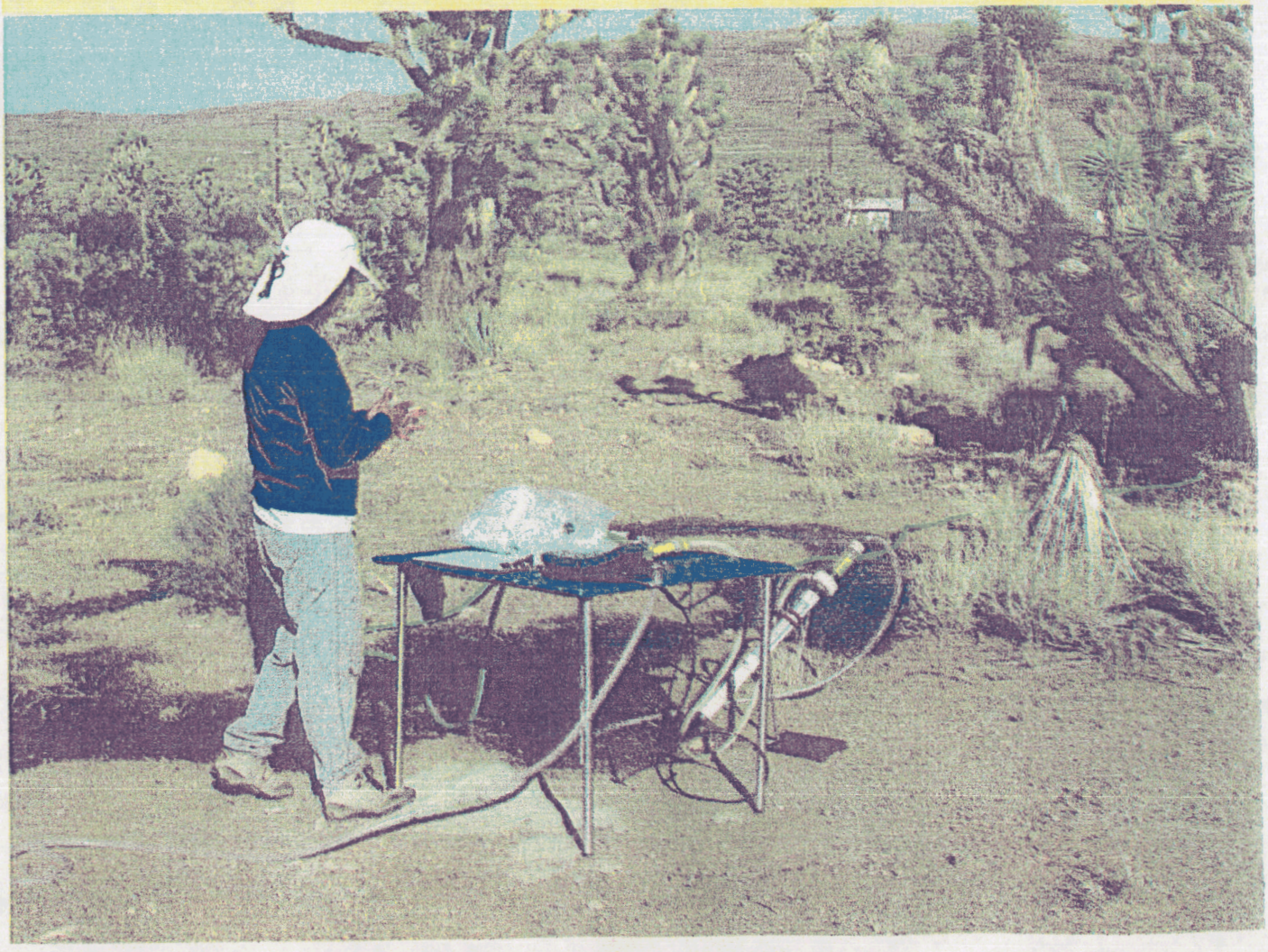

MOHAVE-004

Water Levels 2006

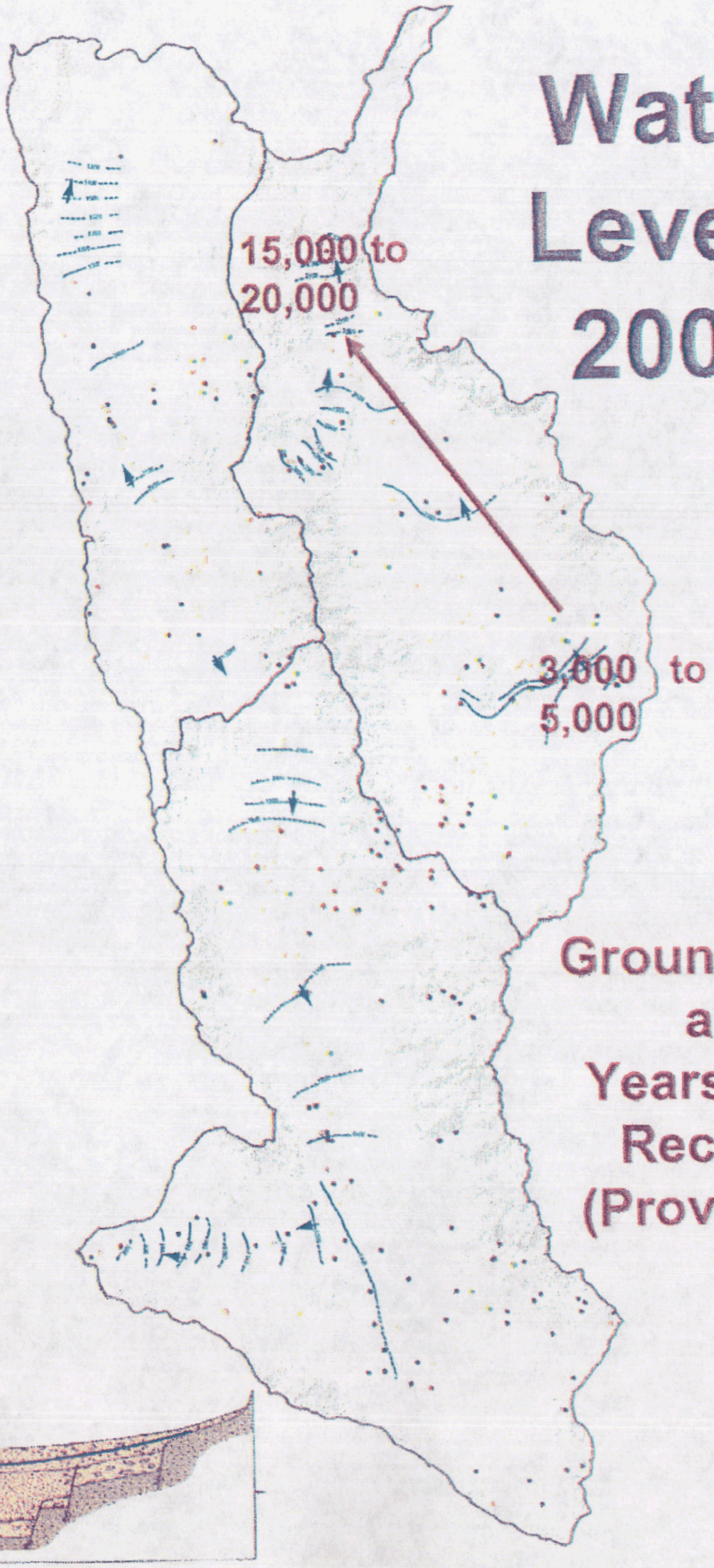

Ground-water age: Years since Recharge (Provisional)

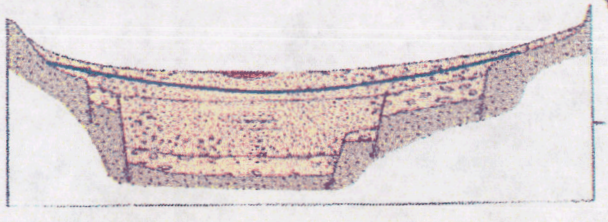

MOHAVE-004

Ground-Water Hydrographs 1940-2006

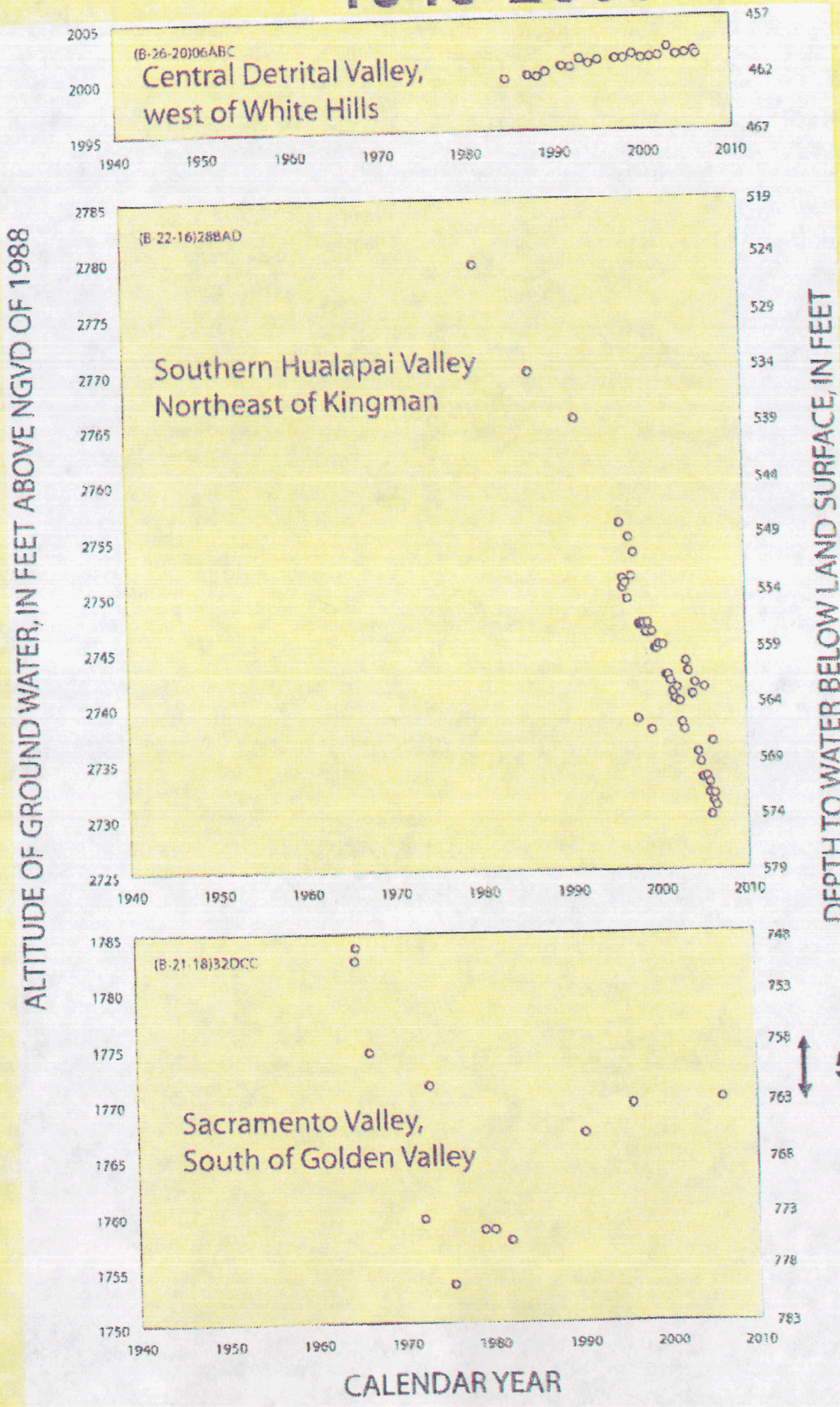

USGS

MOHAVE-004

Ground-Water Quality

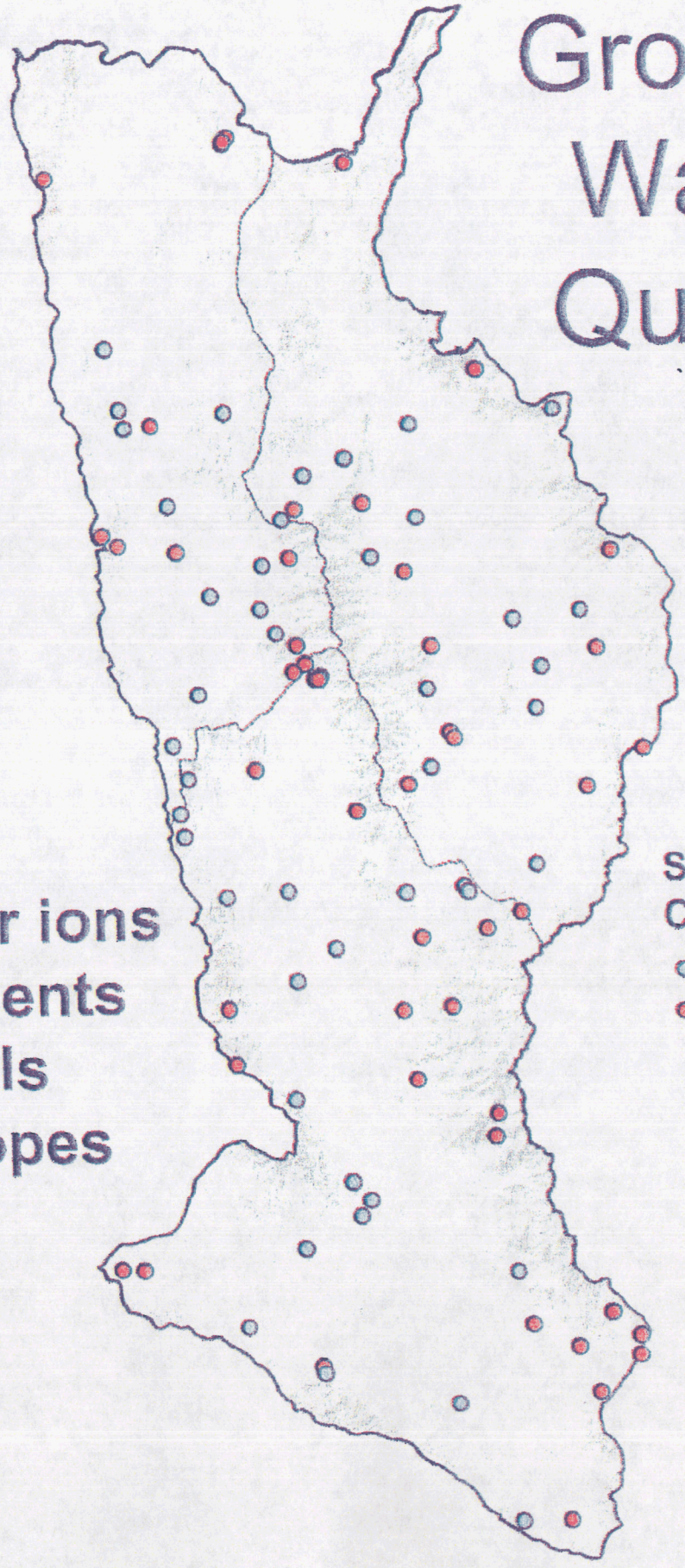

- Major ions
- Nutrients
- Metals
- Isotopes

MOHAVE-004

Upcoming work...

- Recharge & Discharge
- Storage & change in storage over time
- Relies & builds on:
  - Hydrogeologic framework
  - Ground-water occurrence and movement

USGS

Planned reports for Detrital, Hualapai, and Sacramento Valley Basins

1. Study description (fact sheet)	Completed
2. Ground-water occurrence and movement, 2006, and water-level changes	In progress
3. Ground-water quality conditions	In progress
4. Depth to bedrock and gravity map	In progress
5. Hydrogeologic Framework	Planned
6. Ground-water recharge, discharge, and storage, and aquifer properties	Planned

USGS

MOHAVE-004

For more information:

David Anning

dwanning@usgs.gov

(928) 556-7139

http://az.water.usgs.gov/projects/C9Z00.html

Thank-you

USGS

MOHAVE-004

Water-Level Change, 1996 to 2006

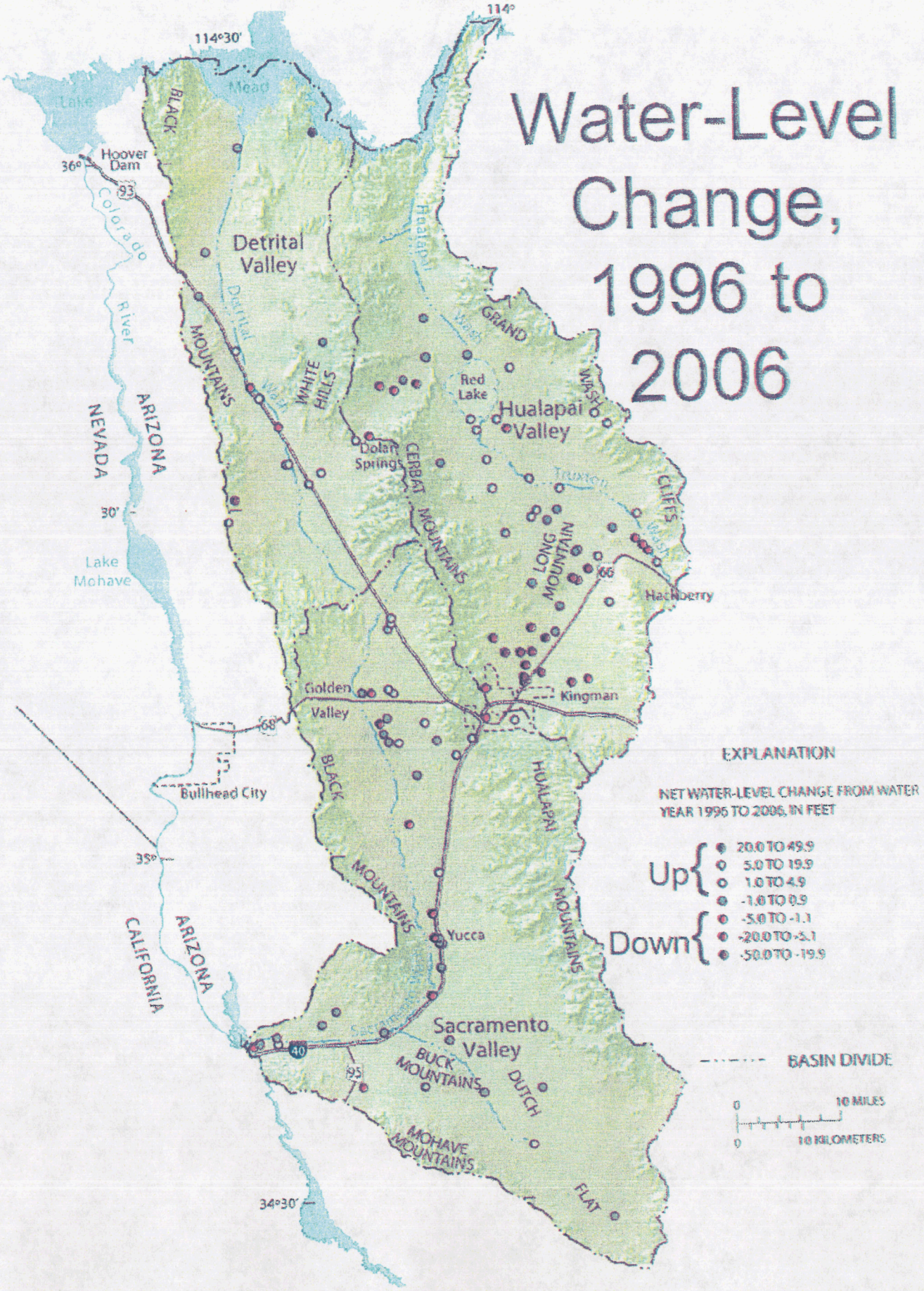

MOHAVE-004

Change in Ground-Water Storage

- Set up monitoring network using gravity and water levels
- Repeat measurements allow for computation of storage changes over time

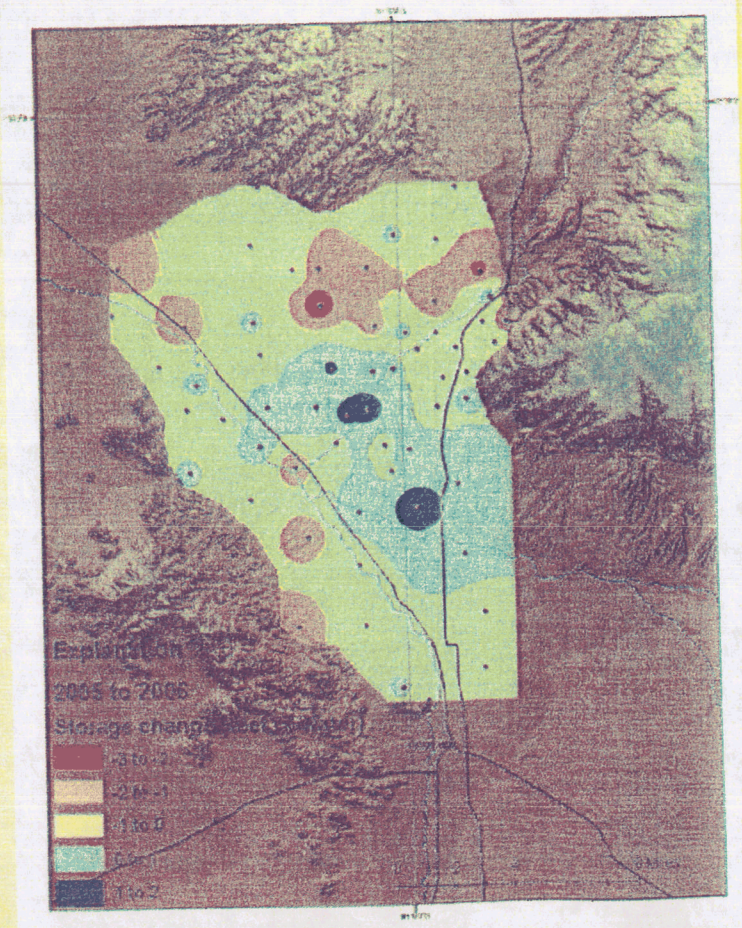

Example: storage change for northwest Tucson

USGS

Hydrogeologic Information Sources

	Drillers Logs	TEM airborne	TEM ground	Gravity
Infor-mation	Lithology with depth	Gross lithology with depth	Gross lithology with depth	Basin-fill thickness
Dimen-sions	Point	Lines	Point	Areal
Cost	Low	Moderate if done in quantity	High	Moderate
Data consis-tency	Poor	Good	Good	Good

USGS

Ground TEM surveys

USGS

MOHAVE COUNTY PLANNING & ZONING DEPARTMENT

P.O. Box 7000 ◆ Kingman, Arizona 86402-7000
3675 E. Highway 66, Suite A ◆ (928) 757-0903 ◆ FAX 757-3577
1130 East Hancock Road ◆ Bullhead City, Arizona 86442 ◆ (928) 758-0707 ◆ FAX 763-0870

CHRISTINE BALLARD
DIRECTOR

MEMORANDUM

EXHIBIT
M-5
admitted

TO: Ron Walker, County Manager

FROM: Christine Ballard, Director CB

DATE: September 10, 2007

RE: General Plan Policies Regarding Griffith Energy and Proposed Peaking Plant

The General Plan contains several policies that give guidance to the County regarding the proposed "peaking" plant adjacent to Griffith Energy. The Plan encourages industrial development in the Interstate 40 Corridor as well as other areas, and then clarifies that Mohave County expects industrial developments to employ responsible techniques that respect the County's natural resources.

- Goal 21 states that the County should identify particular areas in Mohave County for commercial and industrial development, consistent with the County's economic development goals.
  - Policy 21.4 notes that Mohave County should encourage design of commercial and industrial projects that incorporate natural features of the site, that use native vegetation and design themes, recycle gray-water and/or harvest rainwater, and that support the use of alternative energy sources, as set forth in the Development Regulations.
  - Policy 21.6 states that Mohave County should promote increased industrial development in the vicinity of the airports in Kingman, Lake Havasu City, Bullhead City and Colorado City as well as the Interstate 40 Industrial Corridor.

- Goal 36 notes that the County should support environmentally responsible commercial and industrial development which promotes a diverse and stable County economy.
  - Policy 36.2 states that the County should encourage the establishment and/or relocation of diverse industrial and commercial developments in identified areas of the County consistent with these uses.
  - Policy 36.6 states that the County should encourage non-residential development projects that may lead to significant long-term increases in County employment.
  - Policy 36.12 notes that the County should pursue and support industries that have smaller environmental footprints as measured by their use of less water and energy resources as well as their creation of fewer emissions when compared to traditional industry.

Expanding on the natural resource issues, the Plan includes the following:

- Goal 3 notes that the County should preserve the quantity and quality of water resources, in perpetuity, through out the County.
  - Policy 3.5 states that Mohave County will only approve power plants using "dry cooling" technology when the aquifer is threatened by depletion or subsidence.

This summary should explain the General Plan goals and policies that should influence any decision making with regard to power plants or power "peaking" plants.

Policy 20.9 Mohave County should plan for services to UDA's at established urban service levels. These service levels are defined in the Public Infrastructure and Facilities Elements of this General Plan, in the adopted Area Plan for a particular urban community, and in the County's development regulations.

Goal 21: To identify particular areas in Mohave County for commercial and industrial development, consistent with the County's economic development goals.

Policy 21.1 Mohave County shall encourage the design of new commercial developments as integrated centers, or compatible infill, rather than as small individual strip development projects.

Policy 21.2 Mohave County shall use design standards and guidelines to ensure that neighborhood commercial centers, which are located adjacent to residential land, include appropriate setbacks, parking and loading facilities, screening and landscaping to minimize impacts on the surrounding neighborhood, as set forth in the Development Regulations.

Policy 21.3 Mohave County shall use design standards and guidelines to ensure that commercial centers, located adjacent to residential land, take access from collectors, arterials or expressways, not local residential streets, as set forth in the Development Regulations. Development along expressways and limited access highways will be in accordance with the adopted access management plan, as occurs.

Policy 21.4 Mohave County should encourage design of commercial and industrial projects that incorporate natural features of the site, that use native vegetation and design themes, recycle gray-water and/or harvest rainwater, and that support use of alternative energy sources, as set forth in the Development Regulations.

Policy 21.5 Mohave County shall establish design standards and guidelines for development in areas planned for Neighborhood Commercial, General Commercial and Light Industrial uses, to ensure that these areas develop with high quality, compatible design. Standards and guidelines should address elements including, but not limited to, minimum lot sizes, building scale, setbacks, lighting, landscaping, screening and fencing, signage, internal circulation and building materials, as set forth in the Development Regulations.

Policy 21.6 Mohave County should promote increased industrial development in the vicinity of the airports in Kingman, Lake Havasu City, Bullhead City and Colorado City as well the Interstate 40 Industrial Corridor.

Policy 21.7 Mohave County shall use design standards and guidelines for development in areas planned for Heavy Industrial use, to ensure compatibility with surrounding uses and to provide effective circulation and service provision within industrial areas, as set forth in the Development Regulations.

Policy 21.8 Mohave County shall protect industrially-designated areas from encroachment by incompatible uses and from the effects of incompatible uses in adjacent areas.

Policy 21.9 The County shall discourage strip commercial development and shall encourage a pattern of alternating land uses along major arterials with "nodes"

of commercial development separated by other uses such as residential, institutional or office.

Urban Area Plans

Goal 22: To recognize the distinct character of individual communities and encourage land uses consistent with a community's own objectives.

Policy 22.1 Mohave County shall use Area Plans to establish the special goals and policies necessary to reflect and enhance the character of specific areas. Area Plans may be prepared for identified Urban Development Areas, or portions of identified UDA's. These Area Plans shall be part of the Mohave County General Plan.

Policy 22.2 The policies in approved Area Plans shall apply in addition to the policies contained in other sections of the General Plan. The more specific policies shall apply.

Policy 22.3 The General Land Use Diagram contained in the General Plan establishes the range of land use categories appropriate within an urban Area Plan. The Detailed Land Use Diagram contained in the Area Plan shall be consistent with this General Land Use Diagram, and shall be interpreted according to the policies set forth in this Land Use Element.

Policy 22.4 Mohave County shall adopt or modify an urban Area Plan with the participation of the residents and property owners of the affected area and with the involvement of other community organizations or interest groups the County finds to be affected by the Area Plan.

Urban Facility Provision

Goal 23: To provide for organized planning for coordinating funding, construction and maintenance of urban infrastructure, at locations consistent with planned land uses and with capacities that are adequate to meet the needs of these planned land uses.

Policy 23.1 Mohave County shall require that adequate levels of service are provided to serve planned urban development. These service levels are defined in the Public Infrastructure and Facilities Elements of this General Plan, in adopted Area Plans, and in the County's Development Regulations.

Policy 23.2 Mohave County should coordinate with utility providers when amending General Plan Land Use Diagrams, when updating its CIP, and when reviewing development proposals.

A recent report on the economic contribution of water-based users to Bullhead/Laughlin economy, prepared by the University of Nevada and the University of Arizona, noted that over 5,300 jobs are attributed to this non-gaming form of recreation. About 30 percent of these jobs are within Mohave County. The annual impact of 4.8 million visitor days provides an approximately $442,000,000 stimulus to the Laughlin/Bullhead economy.

Provision of Jobs for the Resident Labor Force. Economic development efforts benefit companies seeking locations in Mohave County and provides revenues to the public sector. They also directly benefit the County's residents by providing them a greater number and variety of job opportunities close to home. For this reason, one of the County's economic development goals is to provide more opportunities for jobs for County residents with a variety of skills.

Economic Development Goals and Policies

Goal 36: To support environmentally responsible commercial and industrial development which promotes a diverse and stable County economy.

Policy 36.1 Mohave County should support the retention and expansion of existing County businesses through cooperative programs with other public, private and quasi-public organizations.

Policy 36.2 Mohave County should encourage the establishment and/or relocation of diverse industrial and commercial developments in identified areas of the County consistent with these uses.

Policy 36.3 The County should cooperate with private and quasi-public entities, such as the Chambers of Commerce, in preparing and conducting marketing and advertising campaigns to attract new employers to the North River Economic Region.

Policy 36.4 Mohave County should participate in economic development efforts aimed at attracting a broad range of tourism activities, including tourism oriented to outdoor recreation and historic sites.

Policy 36.5 Mohave County should support economic growth that keeps pace with population growth and provides opportunities for the County's resident workers to work in the County. As one indication of this balance, the County should plan for non-residential land uses to balance the number of jobs in the County with the number of people in the labor force.

Policy 36.6 Mohave County should encourage non-residential development projects that may lead to significant long-term increases in County employment.

Policy 36.7 Mohave County's Economic Development Coordinator will participate with various economic development agencies to attract business to the North River Economic Region and act as the initial welcoming agent. The Coordinator shall assist industries by providing information, identifying potential sites and serving as an ombudsman to public and private entities.

Policy 36.8 Mohave County should support the location or relocation of businesses in

Mohave County through the simplification of the development review process.

Policy 36.9 The County should cooperate with private and quasi-public entities, such as the Arizona Department of Commerce's North River Economic Region coordinator, the Chambers of Commerce and other economic development organizations to develop and update information on current and projected economic trends, labor force, land availability, development processes or other issues relevant to economic development efforts.

Policy 36.10 Mohave County should participate in efforts to obtain funding for economic development programs from State, Federal and other sources.

Policy 36.11 Mohave County should provide information and assistance to economic development projects interested in participating in State, Federal or other economic development programs.

Policy 36.12 Mohave County should pursue and support industries that have smaller environmental footprints as measured by their use of less water and energy resources as well as their creation of fewer emissions when compared to traditional industry.

Goal 37: To encourage economic development at appropriate locations throughout Mohave County and the North River Economic Development Region.

Policy 37.1 The Land Use Element and Area Plans should identify areas designated for future commercial and industrial development, including sites for renewable energy development. The Area Plans may include additional policies defining the appropriate types of non-residential development.

Policy 37.2 Development and redevelopment proposals in historic areas should further the preservation of these distinctive areas.

Policy 37.3 Mohave County should encourage the private sector to promote areas identified in the Land Use Element and Area Plans as primary locations for new industrial development. New locations for economic development activities should be considered once a need can be demonstrated. As a prerequisite, new locations must be able to be supported by existing or developer-provided infrastructure.

Policy 37.4 Capital improvement planning and funding by Mohave County should consider economic development benefits as a criteria in reviewing improvement projects and in setting funding priorities.

Goal 38: To support economic development which provides employment opportunities for County residents at a variety of skill levels.

Policy 38.1 The County should support job training programs designed to improve employment opportunities for Mohave County residents, including programs provided by private businesses and trade schools that match skills with existing and desired industries.

Policy 38.2 The County should cooperate with its school districts to encourage job training

Key Water Issues

Colorado River Water. The quality of water in Lakes Mead, Mohave and Havasu must be maintained to continue attracting tourists to the County. While many other jurisdictions have an impact on the Colorado River, Mohave County's economy and water supplies are so directly linked to the lakes and river that the County has a vital interest in preventing their contamination.

Groundwater Quality. To ensure the viability of its continued use, the quality of area groundwater should be monitored regularly. Key recharge areas in the mountains and bajadas should be protected from development activities that degrade water quality. The effects of urban runoff and septic systems effluent on groundwater quality should be minimized. Mohave County's updated Areawide Water Quality Management Plan ("208" Plan) is a tool to maintain watershed health.

Water Availability. Information on the use and availability of water should be monitored. While there appears to be enough water to meet anticipated demands in the rapidly urbanizing parts of the County for the next 40 to 50 years, long term water planning throughout the County will require better information than is currently available. Development of a Countywide water budget that identifies water supplies and demands for identified groundwater basin subareas will enable the County to use its water resources most efficiently.

Water Quantity and Quality Goals and Policies

Goal 3: To preserve the quantity and quality of water resources, in perpetuity, through out the County.

Policy 3.1 Mohave County should cooperate with ADEQ, local water suppliers, and other agencies to maintain a water budget that inventories the quantity and quality of the County's water resources, identifies how those resources are being used, and monitors commitments for future water use.

Policy 3.2 The County should support programs to monitor groundwater quality and well levels.

Policy 3.3 Mohave County should encourage the efficient use of water resources through educational efforts.

Policy 3.4 New water intensive uses such as golf courses and man-made lakes shall require the use of treated effluent where and when available.

Policy 3.5 Mohave County will only approve power plants using "dry cooling" technology when the aquifer is threatened by depletion or subsidence.

Implementation Measures - Water Quantity/Quality (WQ)

WQ1: Support efforts by utility providers, ADEQ, ADWR, USGS, and USBOR to prepare and maintain a water budget for Mohave County and for individual drainage basins. This water budget should provide information on groundwater yields, contracts, and demands and changes in ground water levels. Mohave County's role should include provision of information available to the County and assistance in coordinating reports.

WQ2: When Area Plans or the General Plan are scheduled for review and update, the latter conducted at least every ten years, a water budget shall be developed, with the aid of the Arizona Department of Water Resources, to prevent the mining or, in some cases, further mining of groundwater.

3. Natural Resources

Mohave County's vast public and private lands are rich in natural resources that contribute to the County's environmental health, economic welfare and less tangible elements of the quality of life. The County's general topography, including the mountains and cliffs in the plateau region of the County, are shown in Exhibit V.3.

Panoramic views of pristine mountains can be seen throughout the County. These views, the Colorado River, its tributaries and wetlands scattered throughout the County are resources that attract tourists throughout the year. In addition to attracting people, the County's unique environments provide habitat for a variety of species, including the species of special status listed in Exhibit V.4. Continuing growth in Mohave County will benefit from actions to maintain the attractiveness of the County's natural environment.

The hillsides of Mohave County serve important aesthetic and environmental roles. Their aesthetic appeal contributes to the quality of life that entices people to live in or visit the County. Hillsides also provide habitat for a wealth of plant and animal species, some of which are rare, threatened or endangered. The mountains receive most of the County's precipitation. Runoff from this precipitation is absorbed by the alluvial soils in the washes leading out of the mountains, providing most of the groundwater for the County's interior groundwater basins. The interface between mountain slope and valley floor provides prime recharge areas Inappropriate development of hillsides could result in erosion and siltation that could pose safety hazards, disturb recharge zones or destroy sensitive habitats.

In spite of the arid climate of Mohave County, there are wetland areas that are subject to Federal protection. These wetlands play important roles in providing habitat, filtering surface water and recharging groundwater. The County does not currently have an inventory of wetlands. Known wetlands include Topock Marsh, some areas adjacent to the County's rivers and miles of ephemeral washes that have been identified in the BLM's Resource Management Plans. Development in wetlands is regulated by the U.S. Corps of Engineers and EPA.

Because the County is home to several endangered species, their habitat is subject to the provisions of the Federal Endangered Species Act. Jurisdictions nationwide have initiated habitat conservation plans to clearly identify land that must be set aside for species preservation and land that may be developed under the Act. In the absence of such a plan, the U.S. Fish & Wildlife Service can review development proposals on a site-specific basis to determine if they are subject to the Endangered Species Act.

When recorded return to:
Board of Supervisors
700 W. Beale Street
Kingman, AZ 86401

INTERGOVERNMENTAL AGREEMENT
BETWEEN
MOHAVE COUNTY
AND
ARIZONA DEPARTMENT OF WATER RESOURCES

This Intergovernmental Agreement is entered into this _____ day of _____, 200_, between Mohave County, a political subdivision of the State of Arizona, and the State of Arizona Department of Water Resources (ADWR) for the purpose of accelerating certain hydrological studies in the three (3) ground water basins located in Mohave County. The request is authorized by A.R.S. § 11-952.

RECITALS

The ADWR initiated a study in October, 2005, to evaluate the three (3) water sheds located in Mohave County: the Sacramento, Detrital, and Hualapai Basins. The study was to be conducted and completed within a five (5) year period. The reference for the Scope of Work and USGS contract is: U.S. Department of Interior U.S. Geological Survey Joint Funding Agreement #06W4AZ03100 and attached Scope of Work for USGS proposal for Rural Watershed Initiative, "Area 2 – Detrital, Hualapai, and Sacramento Valleys, Northwestern, Arizona" Pages 35-49, (attached hereto).

The ADWR, in response to the amount of proposed development in Mohave County, desires to accelerate the study and achieve a completion date of approximately October, 2008.

Because funds are budgeted and allocated for a five (5) year study, it is necessary to acquire additional resources to expedite the study and the ADWR has asked for Mohave County's assistance.

The Mohave County Board of Supervisors believes it is in the best interest of the residents of the County to facilitate the management and protection of our water resources by contributing an amount of One Hundred Thousand Dollars ($100,000.00) to expedite the ADWR study.

///

AGREEMENT

In consideration of the mutual convents contained herein, Mohave County and ADWR agree as follows:

1. The duration of this Agreement shall be until October, 2008, or at such time the study is completed by ADWR.
2. Upon execution of this Agreement, Mohave County agrees to provide an amount of One Hundred Thousand Dollars ($100,000.00) for the purpose of assisting in the funding of the expedited study.
3. The ADWR agrees to use these monies to facilitate the completion of the study in three (3) years rather than five (5) years and will provide written status reports on the progress of the study at least every six (6) months during the term of the Agreement.
4. ADWR agrees to provide Mohave County with a general accounting of how these funds are actually used and that any unused funds will be returned to the County.
5. No additional costs will be assessed to the County.
6. Upon completion of the study, a copy will be immediately provided to Mohave County for their use and for public dissemination.
7. This Agreement is subject to termination pursuant to A.R.S. §38-511.

///

MOHAVE COUNTY

Pete Byers

Pete Byers, Chairman of the Board Date

ARIZONA DEPARTMENT OF WATER RESOURCES

11-7-06

ADWR Director Date

DEPUTY

ATTEST:

Barbara Bracken

Barbara Bracken, Clerk of the Board

BOARD OF SUPERVISORS MOHAVE CO. ARIZONA

ATTORNEY(S) OF RECORD:

I have reviewed the foregoing Intergovernmental Agreement and find it to be in proper form and within the powers and authority granted under the laws of this State.

11-16-06

Special Deputy County Attorney Date
Attorney for Mohave County

11/07/06

Attorney Date
Attorney for ADWR

2007-2640IGA

USGS Information:
CC: 9671
TIN: 53-0196958
DUNS: 137882127
ALC: 14-08-0001

U.S. Department of the Interior
U.S. Geological Survey
Joint Funding Agreement
FOR
WATER RESOURCES INVESTIGATIONS

Customer #: AZ004
Agreement #: 06W4AZ03100
Project #: 9671C9Z
TIN #: 86-6004791
DUNS: 804883924
Fixed Cost Agreement = Yes

THIS AGREEMENT is entered into as of the day provided in 2(c) below pursuant to 43, U.S.C.36c, 43 U.S.C. 50 and 43 U.S.C. 50b, by the U.S. GEOLOGICAL SURVEY, UNITED STATES DEPARTMENT OF THE INTERIOR, party of the first part, and by the ARIZONA DEPARTMENT OF WATER RESOURCES, party of the second part.

1. The parties hereto agree that subject to the availability of appropriations and in accordance with their respective authorities there shall be maintained in cooperation for the regional groundwater flow modeling, some ongoing monitoring of the Upper and Middle Verde River Watershed area and Coconino areas as described in the attached workplans, hereinafter called the program.

2. The following amounts shall be contributed to cover all of the cost of the necessary field and analytical work directly related to this program.

(a) $ 215,642.00 by the party of the first part during the period starting on the effective date provided in 2 (c) below to June 30, 2007

(b) $1,144,000.00 by the party of the second part during the period starting on the effective date provided in 2 (c) below to June 30, 2007

(c) This agreement will not become effective until filed with the Secretary of State.

3. The costs of this program may be paid by either party in conformity with the laws and regulation respectively governing each party.

4. The field and analytical work pertaining to this program shall be under the direction of or subject to periodic review by an authorized representative of the party of the first part.

5. The areas to be included in the program shall be determined by mutual agreement between the parties hereto or their authorized representatives. The methods employed in the field and office shall be those adopted by the party of the first part to insure the required standards of accuracy subject to modification by mutual agreement.

6. During the course of this program, all field and analytical work of either party pertaining to this program shall be open to the inspection of the other party, and if the work is not being carried on in a mutually satisfactory manner, either party may terminate this agreement upon 60 days written notice to the other party.

7. The original records resulting from this program will be deposited in the office of origin of those records. Upon request, copies of the original records will be provided to the office of the other party.

8. The maps, records or reports resulting from this program shall be made available to the public as promptly as possible. The maps, records or reports normally will be published by the party of the first part. However, the party of the second part reserves the right to publish the results of this program and, if already published by the party of the first part shall, upon request, be furnished by the party of the first part, at cost, impressions suitable for purpose of reproduction similar to that for which the original copy was prepared. The maps, records or reports published by either party shall contain a statement of the cooperative relations between the parties.

9. Billing for this agreement will be rendered quarterly. Payments of bills are due within 60 days after the billing date. If not paid by the due date, interest will be charged at the current Treasury rate for each 30 day period, or portion thereof, that the payment is delayed beyond the due date. (31 USC 3717; Comptroller General File B-212222, August 23, 1983.).

ARIZONA DEPARTMENT OF WATER RESOURCES

By _____ Director

By _____
(Signature and Title)

By _____
Nick B. Melcher, Director

By _____
(Signature and Title)

(USE REVERSE SIDE IF ADDITIONAL SIGNATURES ARE REQUIRED) MOHAVE-006

MOHAVE COUNTY REQUEST FOR BOARD ACTION FORM

From: Pete Byers, Supervisor District 1 PB/cil

FORMAL ACTION ☐
CONSENT ☐
RESOLUTION ☐
OTHER ■
INFORMATION ONLY ☐

Date: **April 4, 2007**

BOS Meeting Date: April 16, 2007

SUMMARIZE THE ISSUE & DESIRED ACTION CLEARLY/ATTACH BACKUP MATERIAL:

Presentation by the Arizona Department of Water Resources (ADWR) on the status of the groundwater study in the three basins, focusing on the AeroTEM and gravity surveys, and the water quality and isotopic data collected to date.

Recommended Motion:

Reviewed and Approved By:

County Attorney ☐ Personnel ☐ Finance ☐ County Manager ■

Board Action Taken:

Approved as Requested ☐ No Action Taken ☐ Disapproved ☐

Continued to _____ ☐ Approved with the following changes:

Acknowledged receipt and referred to_____

Filing Information and Retrieval

Filed Bid_____ Filed Agreement_____
BOS Resolution_____ Filed Yearly Correspondence_____
Filed Petition_____ Filed Dedication_____
Filed Land Sold_____ Filed Land Acquired _____
Filed Franchise_____ I.D. Resolution _____
Filed Improvement District_____ Filed Other_____

Date Routed: Additional Information:

XC:

You are reminded that items for the agenda, along with complete backup, must be in the County Manager.. s Office 10 days prior to Board Meeting.

Item No. _____

Presentation 2

WATER INTERCONNECTION AND SUPPLY AGREEMENT

(Mohave County / Griffith Energy LLC)

This Water Interconnection and Supply Agreement (the "Agreement") is entered into by and between Griffith Energy LLC, a Delaware limited liability company ("Griffith"), and the County of Mohave, a political subdivision of the State of Arizona (the "County"), as of the 26th day of April, 1999.

The parties agree as follows:

Section 1. Detailed Contract. This Agreement is one of the Detailed Contracts referred to in that certain Memorandum of Understanding dated as of November 3, 1998, by and between Griffith and the County (the "MOU").

Section 2. Term. The term of this Agreement shall commence on the date first written above and shall expire on the 50th anniversary of the Interconnection Date as defined in Section 4 below, unless sooner terminated as set forth herein. Griffith may terminate this Agreement at any time by giving notice of termination to the County, if Griffith decides to abandon the construction and operation of the Plant as defined below or to permanently discontinue the operation of the Plant, and all of both parties' respective obligations hereunder shall thereupon end except as specifically provided in Section 22 below. Griffith shall give the County notice of any such abandonment at least 5 days prior to any public notification or announcement of any decision by Griffith not to proceed with the construction and operation of the Plant. For any termination related to the permanent shutdown of the Plant, Griffith shall endeavor to make arrangements with the local retail electric provider or other appropriate party(ies) so that electrical power from the Griffith Switchyard shall continue to be made available to serve the Water System as defined below, and Griffith shall give the County at least 60 days prior notice of the permanent shutdown.

Section 3. Notice of interconnection. Interconnection of Griffith's nominal 650 MW electric generating plant to be located near the Griffith Interchange at I-40 in the County (the "Plant") to the water supply system provided by the County from the Sacramento Valley Aquifer (the "Water System Aquifer") pursuant to Section 11 of the Infrastructure Development Agreement of even date herewith between the County and Griffith (such agreement, the "Infrastructure Agreement," and such water supply system, as modified and expanded from time to time, the "Water System") shall be accomplished in accordance with Griffith's construction schedule for the Plant. Griffith shall at all times keep the County informed of the likely time frame within which Griffith needs the Plant connected to the Water System. Griffith shall give the County an interconnection notice (the "Interconnection

Notice") at least 90 days prior to the date by which Griffith needs to have the Plant connected to the Water System. The County shall be obligated to have the Water System ready for the connection of the Plant to the Water System and delivery of water to the Plant Site property boundary no later than the Interconnection Date as defined in Section 4 below, provided, however, that the Interconnection Date cannot be earlier than the Guaranteed Completion Date as defined in the Infrastructure Agreement. Griffith shall be responsible for connecting the Plant to the Water System.

Section 4. Purchase of water by Griffith. The County agrees to provide Griffith, and Griffith agrees to purchase from the County, all water required for the Plant, up to the amount specified in Section 8(a) below, for 50 years from the date the Water System first is connected to and delivers water to the Plant Site (the "Interconnection Date"); provided, however, that in the event of an emergency during which insufficient water is available from the Water System, Griffith may use other water supplies to satisfy all or part of the Plant's needs at Griffith's sole expense.

Section 5. Price and billings for water.

a. Invoices and amounts. Commencing at the Interconnection Date, the County shall invoice Griffith, and Griffith shall pay the County, for the Plant's water usage on a monthly basis in amounts determined as set forth in this Section. Payment of each invoice shall be due within thirty (30) days after receipt of the invoice by Griffith. Griffith shall pay the County Griffith's share of the costs of operation and maintenance of the Water System and capital reserves, with Griffith's share of such costs calculated as 4,800 gallons per minute ("gpm") divided by the Developed Capacity. The Developed Capacity consists, from time to time, of the actual water output capacity of all wells then actually a part of, interconnected with and used or useful in connection with the Water System or the physical capacity of the main transmission pipelines to convey water, whichever is smaller. The initial Developed Capacity is approximately 5,000 gpm, but the parties acknowledge that it may increase as additional water users are connected to the Water System. The County shall include in the monthly invoices and Griffith shall pay to the County all State of Arizona water use, sales, transaction privilege, use and other such water supply taxes associated with the County's sale to Griffith and Griffith's purchase from the County of the water for the Plant as may be in effect from time to time during the term of this Agreement (collectively "Water Taxes") In addition, if in the future the County adopts an excise tax or other such tax of general applicability, it shall apply to water sales to Griffith under this Agreement.

b. Procedure for determining amount. The operation and maintenance cost shall be reasonably estimated in advance by agreement of the County and Griffith for the first year or partial year of operation. For each succeeding fiscal year of the County, it shall be based on the prior fiscal year's actual costs plus or minus any reasonably anticipated differences in operation, maintenance and reserve costs, and including an adjustment to reflect any

overpayments or underpayments by Griffith as compared to the actual cost during the previous fiscal year. Griffith's share of the County's costs shall be determined simultaneously with the preparation of the annual budget of the County or of any improvement district that is responsible for the Water System, and shall be charged to Griffith in 12 equal monthly installments during the fiscal year, regardless of actual water usage by the Plant during any particular month.

c. "Operation and maintenance" defined. "Operation and maintenance" costs chargeable to Griffith consist of the costs of personnel, subcontractors, power, supplies, replacement and spare parts, insurance, all other costs traditionally considered to be operation and maintenance costs, and costs incurred to monitor the Water System Aquifer in accordance with the requirements of Section 8 below, which monitoring costs shall include the costs associated with drilling and providing the monitoring well in accordance with Section 11 of the Infrastructure Agreement.

d. "Capital reserves" defined. "Capital reserves" chargeable to Griffith consist of all reasonably prudent reserves necessary to provide for the repair and replacement of major components of the Water System.

Section 6. Connection and other fees.

a. Griffith fees. The parties acknowledge that the water supply situation with respect to Griffith is unique as compared to that of other existing and future water users. Among other things, Griffith is developing substantial electric transmission infrastructure which is making possible the development of the Water System and further economic development throughout the Industrial Corridor and Mohave County. Griffith therefore shall not be required to pay a connection fee or other fees related to the water supply for the Plant (except the Water System usage fees and Water Taxes described in Section 5 above and except pursuant to Section 8 below).

b. Connection fees from other users. The parties acknowledge that Griffith has made substantial contribution to the development of the Water System pursuant to Section 11© of the Infrastructure Agreement. The County shall, therefore, within sixty days after receipt of any connection fee from a user of the Water System, pay to Griffith a proportionate share of the connection fees paid by such new user, which proportionate share shall be based upon the contribution towards the cost of the Water System made by each party to this Agreement. If the County does not charge a new user a connection fee or if the County charges a new user less than the County should have charged such user pursuant to a reasonable cost sharing formula to be agreed upon in advance by the County and Griffith, after giving due consideration to the connection fees charged by municipal or other governmental water systems in the area, then the County shall nevertheless pay Griffith in accordance with such formula as if the County had charged the new user the full appropriate connection fee. The

County's obligations to pay Griffith under this Subsection shall continue until all of the excess capacity of the initial Water System is allocated to new users and shall thereupon terminate. For purposes of this Section, excess capacity means that portion of the initial capacity of the Water System above 4,000 gpm.

Section 7. Expansion of Water System. Griffith shall not be responsible or liable under any circumstances or any provision of this Agreement for any or all capital costs related to expansion of or improvements to the Water System related to service to other water users.

Section 8. First priority water rights.

a. Water supply assurance. For a period of 50 years commencing on the Interconnection Date, the County shall be responsible for supplying 4,800 gpm of water to the Plant on a first priority water usage rights basis and hereby assures that sufficient water for the needs of the Plant up to a maximum amount of 4,800 gpm will be available to Griffith on such basis from the then Developed Capacity of the Water System at all times subject to those provisions set forth in Section 8(c) below. This priority obligation of the County exists even if there are other users of water from the Water System prior to the Interconnection Date. This priority obligation is a contractual obligation, not a grant of water rights, and if there is at any time insufficient water to supply all users of the Water System, Griffith's right to receive water shall be superior to all other users.

b. Amount of assurance. The Griffith priority of 4,800 gpm includes the anticipated Griffith peak demand plus the Griffith reserve. The parties acknowledge that the actual water usage of the Plant on an average annual basis may be significantly less than set forth in this Section but that Griffith needs to assure itself of having sufficient water reserve available at all times should the Plant operate at levels exceeding Griffith's projections or in the event the Water System is not capable of operating at expected levels.

c. Water assurance and provision limitations. Griffith acknowledges that the County's assurance under this Section and the County's obligations under Section 4 of this Agreement extend solely to water available from the Water System Aquifer, as delivered to the Plant through the Water System, and that the County is not responsible for a failure to meet this assurance or the County's obligations under Section 4 of this Agreement if its failure is due to insufficient water being available in the Water System Aquifer, as delivered through the Water System.

d. County to protect Water System Aquifer. The parties acknowledge that all hydrological studies of the Sacramento Valley Aquifer, including the 1994 Arizona Department of Water Resources study, indicate that the aquifer can adequately supply Griffith's use of water and water for significant additional development of the area. However, the parties also acknowledge that it is critical to Griffith's decision to site the Plant

in the Mohave County I-40 Industrial Corridor (the "Industrial Corridor") that Griffith is assured of a reliable, economic water supply throughout the expected life of the Plant, and that the siting of the Plant in the Industrial Corridor can be expected to stimulate growth and development of additional uses of water from the aquifer by others. The County therefore agrees to take such reasonable measures as it has the power to take under applicable laws in effect from time to time during the term of this Agreement to ensure that there is at all times sufficient water for Griffith's use, up to a maximum amount of water of 4,800 gpm, in the Water System Aquifer from the Water System. Such measures may include, but are not limited to, any or all of the following to the extent permitted by law and with respect to the portion of the Water System Aquifer within Mohave County: (i) maintaining an ongoing planning effort to monitor the projected development of water use from the Water System Aquifer and the status of the Water System Aquifer with the use of one or more monitoring wells, with the participation of Griffith and other interested parties, so that appropriate strategies for protection of the water supply can be devised over time as circumstances change; (ii) cooperating with state and local jurisdictions to protect the water supply; and (iii) requiring newly developed industrial and commercial properties within the geographic area served by the Water System to connect to the Water System. The County agrees to meet its priority assurance obligation to Griffith by whatever means the County may from time to time choose to employ, and nothing in this Section requires the County to exercise any of its governmental powers in any particular fashion in any particular situation. Moreover, anything to the contrary in this Agreement notwithstanding, the County's liability and Griffith's remedy for any default by the County of the County's obligations under this Subsection 8(d) shall be limited to the remedies set forth in Subsection 8(e) below, and Griffith shall not be entitled to recover any incidental, consequential, or other damages from the County for such a default.

e. **Shortage of water.** Should there be insufficient water in the Water System Aquifer, as delivered through the Water System, for the Plant's purposes at any time, Griffith and the County shall cooperate to resolve the shortage. If Griffith wants to continue having water supplied by the County to Griffith for future use for the Plant (which determination may be based on the cost of the new water supply and other relevant factors), then Griffith shall give notice thereof to the County, the County shall develop or connect the Plant and/or the Water System to additional water supplies, all of each parties' respective obligations under this Agreement shall continue and shall automatically extend to such additional water supplies, and the provisions set forth below in this Subsection shall apply. Such additional water supplies shall be from the Water System Aquifer; provided, however, that if additional water from the Water System Aquifer is not available or if one or more alternative sources of water are available and are more cost effective for Plant purposes than is water from the Water System Aquifer, then such alternative source(s) may be utilized. If the shortage is not caused by the County's failure to meet its obligations hereunder, then it is not a default of the County under this Agreement and Griffith shall pay, proportionately with all other users who may benefit therefrom, a fair share of the capital cost of developing or connecting the

Plant or the Water System to additional water supplies. To the extent the shortage is caused by the County's failure to meet any of its obligations hereunder, it is a default of the County under this Agreement and the County shall bear the direct costs of developing or connecting the Plant or the Water System to such additional water supplies at pressure and quality comparable to historical deliveries to the Plant.

Section 9. Operation and maintenance of Water System. The County shall at all times operate and maintain the Water System in a manner that meets all County obligations under this Agreement. The County shall give Griffith access to all wells that are a part of the Water System and any other County owned and operated wells in the Water System Aquifer, including any monitoring wells, so that Griffith can perform, at Griffith's sole expense, the aquifer and subsidence monitoring and reporting required of Griffith in the Arizona Corporation Commission's Certificate of Environmental Compatibility with respect to Griffith, and shall promptly provide Griffith with all data obtained by the County that is relevant to such monitoring and reporting.

Section 10. Water pressure and quality. The County shall design, operate and maintain the Water System to provide at all times a sufficient minimum pressure to deliver 30 pounds per square inch gauge of water at the interconnection point at the property boundary of the Plant Site depicted in Exhibit B attached hereto at a flow rate of 4,000 gpm, referenced to an elevation of 2,490 feet. Without limiting the foregoing water pressure obligation, the County shall give Griffith at least 90 days prior notice of any change in the Water System of which the County has knowledge that would or may affect the water pressure or water quality at the Plant Site, provided, however, that if the County cannot reasonably give Griffith such 90 days advance notice due to the unexpected nature of any such change, the County, nonetheless, shall give Griffith as many days prior notice of the change as reasonably possible.

Section 11. Use of improvement district(s) by County. The parties acknowledge that the Plant Site is located within the Golden Valley Improvement District No. 2. Griffith shall not object to the creation of one or more other improvement districts, nor the inclusion of the Plant Site therein, if desired by the County in connection with the operation and maintenance of the Water System. Griffith's Plant Site shall be a member of any such improvement district, except that the Plant Site shall not be subject to any improvement district taxes, assessments, or other fees or charges that adversely affect the economic terms or effect of this Agreement for Griffith; without limiting the generality of the foregoing, no such district shall impose on Griffith or the Plant Site any cost that this Agreement contemplates shall be borne by the County or others, but a district may be used to collect obligations of Griffith under this Agreement. The County shall require all such districts to join in all of the relevant obligations hereunder in writing and all such districts shall be jointly and severally responsible along with the County to carry out such obligations, subject to any election or other conditions precedent required by applicable law. Any utilization of a district shall not

in any way relieve the County of any of its obligations hereunder, nor change the economic terms or effect of this Agreement. Griffith shall be entitled to approve, in advance, the instrument by which any such district joins in the County's obligations under this Agreement, such approval not to be unreasonably withheld or delayed.

Section 12. Defaults and Remedies.

a. Remedies of the County for Griffith default. If Griffith is at any time in default of any of its payment obligations hereunder, it shall be subject to an action for damages, including incidental and consequential damages related thereto. In addition, if the payment default exists with respect to the County's monthly invoices to Griffith for water service to the Plant, the County may disconnect water service to the Plant in accordance with the County's standard rules, if any, relating to such water service disconnections; provided, however, that no disconnection may be made sooner than 30 days after Griffith's receipt of a notice of disconnection from the County or such longer notice as is required by any standard rule of the County and only if Griffith fails to pay the overdue amount in full within the notice period, including the County's standard interest and penalties for water service.

b. Remedies of Griffith for County default. If either party believes in good faith, at any time, that the County is in default of any of its obligations hereunder, then such party shall immediately notify the other party and the parties shall, as soon as possible, discuss possible solutions and the County shall promptly commence and diligently pursue an appropriate cure to completion within the shortest reasonable time frame possible. If the County is at any time in default of any of its obligations hereunder with respect to delivery of water to the Plant and such default does or may imminently result in insufficient water being made available to the Plant, then Griffith shall have the right, following discussions with the County and upon at least five days prior written notice to the County, to immediately remedy any and all such defaults in any manner deemed reasonable by Griffith, provided, however, that all such determinations by Griffith shall be made in accordance with Prudent Water Utility Practices as set forth below. Griffith's right to cure shall continue until the County has fully cured all such defaults. In such circumstances, Griffith shall have all rights and powers needed to restore and assure the delivery of adequate water to the Plant and Griffith and the County shall cooperate in the exercise of same. The County shall reimburse Griffith for all reasonable actual costs thereby incurred by Griffith within 60 days of receipt of Griffith's periodic invoices therefor, and if there is a dispute about the amount of any such invoice, the County shall nevertheless timely pay the full amount of such invoice to Griffith and may then seek reimbursement through the dispute resolution procedures set forth in this Agreement. Except as otherwise specifically set forth in this Agreement, with respect to any default of the County under this Agreement, Griffith shall also be entitled to do any one or more of the following: (i) seek alternative water supplies; (ii) seek damages from the County, including incidental and consequential damages; and (iii) obtain specific enforcement of any or all of the County's obligations hereunder. It shall not be deemed a

default of the County if the Water System becomes temporarily disabled due to an event of Force Majeure as defined in Section 25 below; provided that the County promptly commences and diligently pursues appropriate repairs to completion within the shortest reasonable time frame possible; and provided further that, among other things, it shall be deemed the fault of the County if a temporary disabling of the Water System is caused by or relates to a failure of the County to properly operate or maintain the Water System.

c. Prudent Water Utility Practices defined. "Prudent Water Utility Practices" means the practices, methods, and acts engaged in or approved by a significant portion of the water utility industry in the State of Arizona during the relevant time period, or the practices, methods, and acts that, in the exercise of reasonable judgment in the light of the facts known at the time the decision was or is to be made, could have been expected to accomplish the desired result at a reasonable cost, reliability, safety, and expedition. Prudent Water Utility Practices does not require the use of the optimum practice, method or act, but only requires the use of acceptable and reasonable practices, methods or acts generally accepted in the State of Arizona.

d. Additional remedies of both parties. Except as otherwise set forth in this Agreement, in addition to their respective rights and remedies under the above provisions of this Section, each party shall also have all such additional rights and remedies as may be available to such party under this Agreement or applicable law. All remedies shall be cumulative and not exclusive.

Section 13. Applicable law. This Agreement shall be governed by and interpreted in accordance with the laws of the State of Arizona. Any disputes hereunder shall be resolved in accordance with Exhibit A, Dispute Resolution.

Section 14. No public utility. Nothing in this Agreement shall make Griffith a public service corporation or other entity subject to the jurisdiction of the Arizona Corporation Commission (the "ACC"). In the event that Griffith is adjudicated to be a public service corporation or other entity subject to the jurisdiction of the ACC, the parties agree to renegotiate the terms of this Agreement in good faith so as to preserve to the maximum extent possible the economic effect of this Agreement while preventing Griffith from being an entity regulated by the ACC.

Section 15. Confidentiality. The County agrees to protect, to the extent permitted by law, the confidentiality of any proprietary information, trade secrets, other sensitive materials or confidential information of Griffith made available to the County prior to or during the term of this Agreement, provided that Griffith has clearly identified any such item as being confidential and not subject to release and so advised the County in writing of such confidentiality prior to any release of such item by the County. The County shall not issue

any press releases or any other public relations materials about Griffith's or the Plant's business related matters without the prior written approval of Griffith.

Section 16. Attorney's fees. In the event any legal proceedings, including arbitration, are instituted with respect to this Agreement, the substantially prevailing party shall be entitled, among other remedies, to recover reimbursement for their reasonable attorney's fees, court costs and other related expenses incurred in connection therewith.

Section 17. Agreement of parties. This Agreement, together with the Property Tax Legislation Agreement of even date herewith between the parties (the "Tax Agreement") and the Infrastructure Agreement, constitutes the entire agreement of the parties with respect to the subject matter hereof and supersedes all provisions of the MOU with respect to the same subject matter. This Agreement may not be modified or rescinded except in writing signed by both parties, and any attempted oral modification shall be void.

Section 18. No third party beneficiaries. There are no third party beneficiaries of this Agreement, and no third party shall be entitled to claim any right or interest under or by reason of this Agreement or to enforce any provision of this Agreement.

Section 19. Notices. All notices under this Agreement shall be in writing or by facsimile and shall be effective on the earlier of (i) the date when delivered in care of the address of such party set forth in this Agreement or the facsimile number so set forth or (ii) the date which is 3 days after mailing, postage prepaid, by certified or registered mail, return receipt requested, to such address. Each party may change their address or facsimile number by giving notice to the other party.

Section 20. Additional acts. Each party shall do all such things and execute and deliver such other documents and instruments as may be reasonably necessary to effectuate this Agreement.

Section 21. Assignments; binding nature. This Agreement shall be binding upon and inure to the benefit of the parties hereto and their respective permitted successors in interest and assigns, but in no event shall a party be relieved of its obligations hereunder without the express written consent of the other party. Griffith may freely assign its rights and interests under this Agreement, but only as part of a transfer of an interest in Griffith's electrical generating station project or for financing purposes in any way related to such project. Griffith shall notify the County a reasonable time in advance of any contemplated assignment and shall provide the County a copy of the assignment instrument within 10 days after any such assignment. The County shall not assign any of its rights and interests herein except as specifically permitted with respect to joinder of an improvement district in certain of the provisions of this Agreement. Except as specifically permitted herein, any purported

assignment or transfer of all or any part of either party's rights in or interest under this Agreement shall be void.

Section 22. Survival. The provisions of Sections 2, 15 and this Section shall survive the expiration or termination, for any reason, of this Agreement.

Section 23. Severability. In the event any provision of this Agreement is declared to be unenforceable by a court of competent jurisdiction, the remaining provisions of this Agreement shall remain in full force and effect and the parties shall renegotiate the terms of this Agreement in good faith so as to preserve to the maximum extent possible the benefits and burdens intended to be accorded each party under this Agreement.

Section 24. Expenses of Negotiation. Each party agrees to bear its own expenses incurred in connection with negotiating and executing this Agreement.

Section 25. Force majeure. Neither party shall be liable for failure to carry out any of its obligations under this Agreement if such failure is caused by Force Majeure. A party rendered unable to fulfill any obligation under this Agreement by Force Majeure must make reasonable efforts to remove the inability in the shortest reasonable time consistent with commercial practicability, and shall notify the other party in writing of such inability and the cause thereof within forty-eight (48) hours of the commencement thereof, of all efforts made to remove the inability, and of the time when the inability is removed. The time for completion of each delayed obligation shall be adjusted as necessary and agreed upon between the parties.

"Force Majeure" means any cause beyond the control of the party affected, and which the party affected is unable to overcome by reasonable efforts, including without limitation, acts of God, fire, flood, landslide, lightning, earthquake, hurricane, tornado, storm, freeze, volcanic eruption, blight, famine, epidemic or quarantine, casualty, war, invasion, civil disturbance, explosion, or acts of public enemies.

Section 26. Additional Detailed Contracts. The parties agree that they will from time to time negotiate in good faith such additional Detailed Contracts as may be or become necessary or desirable to implement the intent of this Agreement, the Infrastructure Agreement or the Tax Agreement.

Section 27. Conditions to County's water interconnection and supply obligations. The County's obligations set forth in this Agreement are expressly conditioned upon and subject to all federal, state and local permits, consents, certificates and other authorizations ("County Permits"). The County agrees that it will make all reasonable efforts to timely obtain the County Permits.

Section 28. Authorization. This Agreement becomes effective only after approval by the Board of Supervisors of the County and the board of managers of Griffith, and after being duly executed on behalf of each of the parties. Each party represents and warrants to the other party that this Agreement has been duly authorized, executed and delivered, that the person signing this Agreement on behalf of such party has full authority and power to do so, and that this Agreement is binding on such party in accordance with its terms. Each party further represents and warrants to the other party that such party has the full power and authority to enter into this Agreement and to perform all of such party's obligations hereunder pursuant to applicable laws in effect as of the date of this Agreement. Among other provisions of law, the Board of Supervisors of the County has authority to engage in economic development activities such as those contemplated herein pursuant to A.R.S. Sections 11-251 et seq., 11-254 and 11-254.04.

Section 29. A.R.S. Section 38-511. This Agreement is subject to the provisions of A.R.S. Section 38-511.

IN WITNESS WHEREOF, and intending to be bound hereby, the parties have executed this Water Interconnection and Supply Agreement as of the date first written above.

GRIFFITH ENERGY LLC,
a Delaware limited liability company

By: _____
Its: Vice President

Address for notices:

Griffith Energy LLC
11350 Random Hills Rd., Suite 400
Fairfax, Virginia 22030
Attn: Executive Director

telephone 703-293-2600
facsimile 703-293-2659

COUNTY OF MOHAVE,
a political subdivision of the State of Arizona

By: _____
Its: _____

Address for notices:

Mohave County Manager
809 East Beale
Kingman, Arizona 86402-7000

telephone 520-753-0729
facsimile 520-753-0732

EXHIBIT A
DISPUTE RESOLUTION PROCEDURE

A. In the event of any disputes between the parties under this Agreement, such disputes shall be settled if possible by friendly negotiation. If settlement cannot be reached by negotiation through senior representatives of the parties, then the dispute shall be finally settled by arbitration.

Each party shall have the right by giving notice to the other party to refer the dispute or controversy to arbitration at any time without recourse to common or commercial courts.

The notice shall identify the name and the address of the arbitrator appointed by the party giving notice and the points of dispute. Within thirty (30) days after receipt of such notice, the other party shall give notice to the first party of the appointment and name and address of the second arbitrator. The two arbitrators so appointed shall appoint a third arbitrator within sixty (60) days after the appointment of the second arbitrator. If the other party fails to appoint the second arbitrator within thirty (30) days after receipt of notice of the appointment of the first arbitrator, or if the two arbitrators appointed by the parties fail to appoint a third arbitrator within sixty (60) days after the appointment of the second arbitrator, the American Arbitration Association (AAA) shall have the power, on request of any party, to make the appointments which have not been made. The seat of arbitration shall be in Phoenix, Arizona, U.S.A. The arbitration shall be conducted in accordance with the Commercial Rules of the AAA in effect at that time, except that in the event of any conflict between those Commercial Rules and this Exhibit, the provisions of this Agreement shall govern. In arriving at their decision, the arbitrators shall consider the pertinent facts and circumstances and be guided by the terms and conditions of this Agreement, and if a solution is not found in the terms of this Agreement, the arbitrators shall apply the provisions of the law of the State of Arizona, U.S.A., excluding its conflict of law rules. The written decision of the arbitrators shall be made by majority vote, shall contain the reasons for the decision and shall be final and binding upon the parties.

Neither party shall seek recourse to a court of law or other authority to appeal for review of the arbitration decision, unless fraud is involved in such decision. Reasonable expenses of the arbitration shall be paid as the arbitrators determine. All claims which the parties have against each other under this Agreement at the time of the demand for arbitration shall be consolidated and tried in the same proceeding on the demand of either party, if the arbitrators agree that such consolidation is feasible. For all purposes an arbitration award shall be considered to be legally binding when it has been issued pursuant to the procedure set forth in this Exhibit. The arbitral award, if any, shall be enforceable in any court of competent jurisdiction. When the arbitral award is in settlement of a disputed item concerning which costs has been shared proportionally or paid by one party per this Agreement, the parties shall be entitled to claim, and the arbitrators shall award, interest on such costs required to be reimbursed by one party to the other party from the date payments (by the party ultimately found

to be not responsible therefore) for the specific items were made to the date the payment of reimbursement therefor is made to such initially paying party. Interest on these costs shall accrue at a fluctuating rate per annum equal to the prime rate of the Wells Fargo Bank (or its successor) which is in effect during the time in question plus two percent (2%). The substantially prevailing party in any arbitration proceeding shall be awarded their reasonable attorneys' fees, arbitration costs and other related expenses incurred in connection therewith.

B. If a dispute also involves a third party, the parties agree to use their best efforts to cause the third party to abide by the arbitration provisions set forth herein.

EXHIBIT
M-8
admitted

REVISED AND RESTATED

WATER INTERCONNECTION AND SUPPLY AGREEMENT

(Mohave County / Griffith Energy LLC)

This Revised and Restated Water Interconnection and Supply Agreement (the "Agreement") is entered into by and between Griffith Energy LLC, a Delaware limited liability company ("Griffith"), and the County of Mohave, a political subdivision of the State of Arizona (the "County"), as of the 4th day of September, 2007 (the "Effective Date").

Recitals

A. On April 26, 1999 the parties entered into a Water Interconnection and Supply Agreement ("Agreement") under which, among other things, the County agreed to supply certain quantities of water to Griffith's nominal 600 MW electric generating plant located near the Griffith Interchange at I-40, in Mohave County (the "Plant")

B. Pursuant to the Agreement, the County operates an existing County-owned water system that currently serves the water needs of the Plant as well as other water customers of the County.

C. Griffith wishes to use a portion of the water available under the Agreement to provide water to a new electric generating plant located adjacent to the Plant and owned by Northern Arizona Energy, LLC, a Delaware Limited Liability Company ("NAE"). The new electric generating plant, the Northern Arizona Energy Project ("NAEP") will consist of four (4) simple cycle combustion turbine generators having a combined generating capacity of 175 megawatts.

D. Griffith and the County therefore have agreed to amend and restate this Agreement in its entirety to reflect modified water supply terms and conditions for the Plant; and coincident with execution of this Agreement, the County has agreed to execute a separate water supply agreement for the benefit of NAEP (the "NAE Agreement") attached hereto as Exhibit B.

E. Pursuant to this Agreement, Griffith has agreed to reduce its contract capacity entitlement to 4,350 gallons per minute (gpm), thereby making available to the County 150 gpm of presently uncontracted capacity for the benefit of other potential future water customers. Griffith's 4,350 gpm contract capacity represents a 450 gpm reduction from the original Griffith contract capacity of 4,800 gpm. When the County and NAE execute the water delivery agreement for NAEP, the Addendum attached hereto as Exhibit C (the "NAEP Addendum") will be executed by the County and Griffith whereby Griffith will further reduce its contract capacity to 3900 gpm, thereby making available 450 gpm to NAE for the water requirement of the NAEP. Griffith has also agreed to bear the financial obligations set forth in Section 6.1.1 of this Agreement as allocable to (i) the 150 gpm of presently uncontracted capacity unless and until such capacity is requested for contracting by the County, and (ii) the 750 gpm of capacity being retained in the system to ensure reliable water delivery services to all of the water customers.

F. Given the benefit to the County of (i) the limitation of County liability under this Agreement, (ii) the reduced water capacity allocation to the two generating plants and (iii) the resulting

availability of an additional 150 gpm of capacity for use by potential new water customers, the County will cooperate with Griffith and NAE and will not oppose NAE in the permitting and regulatory processes for the NAEP as further provided in Section 28.

Section 1. Definitions.

1.1 Available Water System Production Capacity shall mean the gallons per minute of actual production capacity of the Water System.

1.2 Capital Reserves/ Replacement Account shall mean the cash reserves reasonably necessary to provide for the repair and replacement costs of major components of the Water System, including but not limited to spare parts and modifications to Water System components, but expressly excludes any reimbursement of prior County capital expenditures for the Water System.

1.3 Griffith Maximum Contract Capacity shall mean four thousand, three hundred and fifty gallons per minute (4,350 gpm), subject to reduction to 3,900 gpm pursuant to the NAEP Addendum.

1.4 Operation and Maintenance Costs shall mean the direct costs of personnel, administration, engineering, testing, tools, equipment, labor, materials, subcontractors, electric power, supplies, replacement, spare parts, insurance and all other direct costs and expenses required and incurred to operate and maintain the Water System, but shall not include any allocation of County general administrative overhead costs or any reimbursement of prior County capital expenditures for the Water System.

1.5 Prudent Water Utility Practices shall mean the practices, methods, and acts engaged in or approved by a significant portion of the water utility industry in the State of Arizona during the relevant time period, or the practices, methods, and acts that, in the exercise of reasonable judgment in the light of the facts known at the time the decision was or is to be made, could have been expected to accomplish the desired result of managing, operating, and maintaining the Water System at a reasonable cost, reliability, safety, and expedition. Prudent Water Utility Practices does not require the use of the optimum practice, method or act, but only requires the use of acceptable and reasonable practices, methods or acts generally accepted in the State of Arizona.

1.6 Water System shall mean, collectively, the existing six (6) developed operating wells, the monitoring well, the water delivery system and the storage system owned and operated by the County in the Sacramento Valley, all as further described on Exhibit A.

1.7 Water System Aquifer shall mean the Sacramento Valley aquifer accessible south of Oatman Road.

1.8 Water System Capacity shall mean the total production capacity of the Water System, nominally rated at five thousand, seven hundred and fifty (5,750) gallons per minute for purposes of this Agreement.

Section 2. Term. The term of this Agreement shall commence on the Effective Date and shall expire on December 31, 2049. Griffith may terminate this Agreement at any time by giving

at least six (6) months written notice of termination to the County. The parties agree to negotiate in good faith any water supply requirements of the Plant after the expiration of this Agreement.

Section 3. Water Supply. For the term of this Agreement, the County agrees to use its best efforts to deliver from the Water System to Griffith, all pursuant to the other terms set forth in this Agreement, the full water requirement of the Plant up to the Griffith Maximum Contract Capacity on a first priority basis as against all other customers on the Water System. At any time, Griffith may, at Griffith's sole expense, develop and use other water supplies and water delivery services, including the development of new production wells in the Water System Aquifer, if necessary to satisfy all or part of the Plant's needs; provided however, that this sentence shall not be construed to diminish Griffith's payment obligations, the County's delivery obligation or other obligations under this Agreement with respect to the Water System.

Section 4. Insufficient Available Water System Production Capacity.

4.1. Curtailment Priority. In the event that for any reason the production capacity of the Water System is less than the total customer demand on the Water System from time to time, then (except as otherwise provided with respect to NAEP in the NAE Agreement) the water supply from the Water System to the other non-Griffith customers shall be reduced until the Available Water System Capacity and the Water System customer demand are in balance. In no event shall the supply to the Griffith Plant be interrupted or curtailed until all other customer demand being served from the Available Water System Production Capacity has been curtailed or eliminated as necessary to fulfill Griffith's full priority requirement.

4.2. Emergency Water Supply. In the event that for any reason the Available Water System Production Capacity is less than the full water requirement of the Plant, then under such emergency conditions the County shall use reasonable efforts, consistent with the County's other contractual service obligations to other water users, to supply Griffith any such shortfall of water from any other well(s) or water delivery system(s) that may be owned or operated by the County, if any, until the Water System is restored to its full capacity. Griffith shall reimburse the County for all costs incurred to provide such emergency water supply. Reciprocally, any excess Available Water System Production Capacity not required for Griffith, NAEP or other Water System customers may be utilized by the County to provide temporary emergency water service to other County water customers, if any, on the same terms and conditions as applied to emergency service for Griffith, including cost reimbursement obligations.

Section 5. Water System Capacity

5.1. Confirming Water System Capacity For purposes of this Agreement, the Water System Capacity has been established to be 5750 gallons per minute. However, given the limited operating hours to date on the sixth well, which was developed by the County on well site number 9 (the "Sixth Well"), and the lack of any history of sustained concurrent pumping of all of the Water System wells, it is agreed that within 90 days of the Effective Date of this Agreement, the County will perform a pump test on the Sixth Well to confirm that it can reliably produce a minimum of 750 gpm and to determine any improvements that may be required to ensure such minimum pumping capacity. If the need for capital improvements to the Sixth Well is indicated by such testing, then the required improvements shall be undertaken by the County using funds from the Capital Reserves/Replacement Account. .

5.2. Limitation on Water System Capacity Commitments The County agrees that through the term of this Agreement any new or additional contract capacity commitments from the Water System to third party water users (other than NAE) will be strictly limited to 150 gpm in the aggregate, which is the amount released by Griffith to be held as uncontracted capacity in the Water System until the County requests it for contracting. The parties acknowledge that this express limitation and the release of such capacity from Griffith for the benefit of the County and third parties are partial consideration for this Agreement and the NAEP Agreement.

5.3. Additional Production The Parties acknowledge and agree that the County is under no obligation to develop additional production wells or expand the production capability of the Water System, other than if mutually agreed upon in order to maintain the existing Water System Capacity. If, however, independent of this Agreement, the County develops or assumes from third parties the ownership and/or operation of additional well(s) and production capacity, then in order to ensure the integrity of the Water System and the County's ability to perform its obligations under this Agreement, the following shall apply: (1) If such additional well(s) are drilled within two miles of the Water System's existing wells, then the County shall integrate such additional well(s) with the Water System in accordance with Prudent Water Utility Practice, if (i) the County believes in its reasonable discretion that interconnection is feasible and will be beneficial to the operation of the Water System and the additional well(s), and (ii) the integration is acceptable to any third parties having rights to the additional well(s); and (2) If such additional well(s) are drilled beyond two miles of the Water System's existing wells, then the County may, at the County's discretion, integrate such well(s) with the Water System. In no event shall the rights of Griffith extend beyond the Water System as defined herein, except as may be provided in other provisions of this Agreement or in subsequent reciprocity agreements.

Section 6. Invoices, Payments and Reporting

6.1. Invoices. The County shall invoice Griffith, and Griffith shall pay the County, for the Plant's water usage on a monthly basis in amounts determined as set forth in this Section. Payment of each invoice shall be due within thirty (30) days after receipt of the invoice by Griffith.

6.1.1 Griffith's share of the Operation and Maintenance Cost of the Water System and obligation to replenish the Capital Reserves/Replacement Account shall be calculated as follows:

Griffith Maximum Contract Capacity + Water System uncontracted capacity* /
Water System Capacity

Example:

Month 1 Operation and Maintenance Cost = $10,000
Month 1 Capital Reserves/Replacement Account replenishment = $700

Griffith Maximum Contract Capacity =	4,350
Water System uncontracted capacity* =	900*
Total capacity charged to Griffith =	5,250

Water System Capacity = 5,750

5250 / 5750 = 0.913 (91.3%)

Griffith's share of Operation and Maintenance Cost would be 91.3% of $10,000 or $9,130; and Griffith's share of the Capital Reserves/Replacement Account replenishment obligation would be 91.3% of $700, or $639

*If, when and to the extent that the County enters into contract(s) for any of the 150 gpm of capacity released by Griffith and available for future County contracting, then Griffith's payment obligation attributable to Water System uncontracted capacity shall be reduced accordingly, pro rata.

6.1.2 The County shall include in the monthly invoices and Griffith shall pay to the County all State of Arizona water use, sales, transaction privilege, use and other such water supply taxes associated with the County's provision of water delivery services for the Plant as may be actually assessed to the County by, and paid by the County to, the Arizona Department of Revenue or other duly authorized taxing authority on account of such services under laws and regulations in effect from time to time during the term of this Agreement. In addition, if in the future the Count adopts an excise tax or other such tax of general applicability to such services, it shall apply to water delivery to Griffith under this Agreement. When accounting for and invoicing Griffith for taxes due, the County shall not apply a tax charge to Griffith greater than the tax liability actually owed and paid by the County to the taxing authorities.

6.1.3 The County will invoice Griffith annually no later than March 1 for payment due on April 1st in accordance with the following schedule:

April 1, 2008	$10,000
April 1, 2009	50,000
April 1, 2010	40,000
April 1, 2011	40,000

This provision does not create a new obligation of Griffith to the County, but is embodied in this Agreement solely to affirm Griffith's continuing obligation to make such payments to the County, notwithstanding that the First Revised Implementation Agreement dated October 16, 2000, between the Parties, on which such obligation is based, is integrated in and superseded by this Agreement.

6.2. Procedure for Determining Amount.

6.2.1 Budgets and Payments The Operation and Maintenance Cost and Capital Reserve/Replacement Cost Budget for the Water System (the "Budgets") for fiscal year July 1, 2007 to June 30, 2008 are included as **Appendix 1**. For each succeeding year, the annual Budgets shall be established in accordance with the budget process set forth in Section 6.2.2 and shall be based on the prior year's actual costs plus or minus any reasonably anticipated differences in Operation and Maintenance Costs and Capital Reserve/Replacement, and including adjustments to reconcile any overpayments or underpayments by Griffith as compared to the actual cash expenditures during the previous fiscal year. Griffith's share of the Approved Budgets shall be

charged to Griffith in 12 equal monthly installments during the following year, regardless of actual water usage by the Plant during any particular month. Any adjustment from the prior fiscal year reconciliation shall be applied to the monthly invoices beginning with the month after the County has closed the prior year's accounting books (typically the end of August) and will be applied in equal installments for the remaining months of that fiscal year.

6.2.2 Budget Consultation No later than May 1 of each year, the County shall provide the Budgets to Griffith and shall hold a Budget consultation meeting with Griffith representatives within 30 days of issuance of the Budgets. The Parties will in good faith, jointly review and examine all components of the Budgets, and the County will give due consideration to the integration of Griffith's comments and recommendations into the final Budgets to be submitted to the Mohave County Board of Supervisors for approval by August of each year.

6.3. Reporting. The County and Griffith mutually agree to promptly provide upon request by the other party, all data, engineering evaluations and reports specific to the Water System obtained by the County and/or Griffith during Water System operations and groundwater monitoring. In addition, the County shall provide to Griffith a quarterly report that will include, at a minimum, the following information:

6.3.1 An executive summary of the operations and maintenance of the Water System during the prior quarter;

6.3.2 A description of all maintenance activities that were performed on the Water System during the prior quarter;

6.3.3 A description of the performance of each well and any outages that were experienced during the prior quarter, including cause, outage duration and remedy;

6.3.4 A cash flow statement for each of the accounts used to manage the cash activities for Operations and Maintenance Costs and the Capital Reserve/Replacement Account for the Water System, including beginning balance, payments from customers, expenditures on the Water System and ending balance for the quarter. The cash balance as of June 30, 2007 of each account is presented in **Appendix 2**.

6.4. Water System Funds Management.

6.4.1 Cash Management Cash for the Operations and Maintenance account and the Capital Reserve/Replacement account shall be managed in separate fund accounts and shall not be commingled with any other County cash accounts. Interest earned on such fund accounts shall accrue to the benefit the system and shall serve to offset future Budgets.

6.4.2 Capital Reserve/Replacement Account Management, Cap, and Emergency Supplement. The Capital Reserve/Replacement Account balance as of June 30, 2007 was $726,000 (Appendix 2). The Parties agree that no additional invoices seeking payments to the Capital Reserve/Replacement Account will be issued by the County until such time as that balance falls below Five Hundred Thousand ($500,000.00), and that thereafter the Capital Reserve/Replacement Account shall at no time exceed Five Hundred Thousand ($500,000.00) (the "Reserves Cap"). At any time when the Capital Reserve/Replacement Account balance equals or exceeds the Reserves Cap, the County shall suspend monthly Capital Reserve/Replacement charges until such time as that balance falls below the Reserves Cap. In the event of an emergency requiring capital expenditures for the Water System exceeding the Capital Reserve/Replacement Account balance, and after written notice from the County to Griffith setting forth the details of the emergency and the proposed excess capital expenditures, the County shall issue an emergency supplemental budget invoice to the customers of the Water System. The supplemental budget invoice shall include a description of any Water System failures or pending failures, the recommended emergency repairs or other remedies, and a detailed estimate of the cost to perform the work. Within five (5) days of receipt of the supplemental budget invoice from the County, Griffith shall pay its allocable share of such funding request. The parties acknowledge that the County cannot obligate County general funds and does not have access to any other financing sources; and, therefore, the County can only advance and perform such emergency repair work to the extent that the funds are available in the Capital Reserves/Replacement Account or are received from the Water System customers pursuant to the supplemental budget invoice.

6.4.3 Separation of Accounting The County shall account for all Operation and Maintenance Cost and Capital Reserves/Replacement Account activity separately as incurred for the Water System and any future expansion of production wells and/or distribution system, and shall maintain books and records in accordance with generally accepted accounting principles so as to provide Griffith and other customers with documented verification of the appropriate attributions and allocations of costs.

6.4.4 Audits Griffith shall have the right, at Griffith's sole expense, to audit all accounts and funds, and all related accounting, operations, maintenance and other books and records, in any manner reasonably related to the Water System and/or its management, operation or maintenance. The County shall fully cooperate with such audits, and Griffith shall reimburse the County upon presentation of an invoice and explanation for any material costs incurred by the County in cooperating with such audits.

Section 7. Expansion to Serve New Customers. Griffith shall not be responsible or liable under any circumstances or any provision of this Agreement for any capital costs related to any expansion of or improvements to the Water System or any future water-related County-owned facilities made for the purpose of providing new water service to other water users.

Section 8. Shortage of Water Should there be, at any time and for whatever reason, insufficient water in the Water System Aquifer to supply Griffith's water requirements through the Water System after implementation of Prudent Water Utility Practices and appropriate capital expenditures, *e.g.*, lowering of pump depth settings, deepening of wells, addition of new wells, etc., and after application of the priority and curtailment provisions of this Agreement, then

Griffith and the County shall cooperate to address reasonable measures intended to resolve the shortage and access additional water supplies at the expense of Griffith and all other users who may elect to benefit from such measures.

Section 9. Operation and Maintenance of Water System. The County shall at all times operate and maintain the Water System in accordance with Prudent Water Utility Practices in order to deliver sufficient water from the Water System to satisfy the water supply obligations of this Agreement. The County shall give Griffith access to all wells and other components of the Water System and any other County owned and operated wells in the Water System Aquifer, including any monitoring wells, so that Griffith can perform, in its sole discretion and at its sole expense, (i) inspections of the physical Water System, and (ii) the aquifer and subsidence monitoring and reporting required of Griffith in the Arizona Corporation Commission's Certificate of Environmental Compatibility with respect to Griffith. Griffith shall provide the County (i) a copy of any water related compliance reports issued to State or Federal agencies in accordance with Griffith's permits to operate and (ii) other studies or reports conducted or authorized by Griffith related to the Water System or the Water System Aquifer.

Section 10. Water Pressure and Quality. The County shall operate and maintain the Water System to provide at all times a sufficient minimum pressure to deliver 30 pounds per square inch gauge of water at the interconnection point at the property boundary of the Griffith Plant site referenced to an elevation of 2,490 feet, at a flow rate equal to the Griffith Maximum Contract Capacity. Without limiting the foregoing water pressure obligation, the County shall give Griffith at least 90 days prior notice of any change in the Water System of which the County has knowledge that would or may affect the water pressure or water quality at the Plant site, provided, however, that if the County cannot reasonably give Griffith such 90 days advance notice due to the unexpected nature of any such change, the County, nonetheless, shall give Griffith as many days prior notice of the change as reasonably possible.

Section 11. Use of Improvement District(s) by County. The parties acknowledge that the Plant site and the Water System are located within the boundaries of the Golden Valley Improvement District No. 2 ("GVID 2"), although such district is currently not functioning. The County agrees that if GVID 2 or any other such applicable special taxing district ever begins actively functioning, the County will take reasonable actions consistent with its legal obligations with respect to the formation and/or approval or expansion of such district(s) and any taxes or assessments assessed with respect thereto in order to prohibit the Water System from being included within, assigned to, or in any other manner made subject to GVID 2 or any other such district in any respect that could alter net economic effect of this Agreement to Griffith, except to the extent hereafter approved in writing by Griffith at Griffith's sole discretion prior to such action.

Section 12. Defaults and Remedies.

12.1. Remedies of the County for Griffith Default. If Griffith is at any time in default of any of its payment obligations hereunder, it shall be subject to a claim for damages. In addition, if the payment default exists with respect to the County's monthly invoices to Griffith for water service to the Plant, the County may disconnect water service to the Plant in accordance with the County's standard rules, if any, relating to such water service disconnections; provided, however, that no disconnection may be made sooner than 60 days after Griffith's receipt of a

separate notice of disconnection from the County or such longer notice as is required by any standard rule of the County and only if Griffith fails to pay the overdue amount in full within the notice period, including the County's standard interest and penalties for water service, if any.

12.2. Remedies of Griffith for County default. If Griffith believes in good faith, at any time, that the County is in default of any of its obligations hereunder, including but not limited to, failure of the County to properly operate or maintain the Water System in accordance with Prudent Water Utility Practices, then Griffith shall immediately notify the County and the parties shall, as soon as possible, discuss possible solutions and the County shall promptly commence and diligently pursue an appropriate cure to completion within the shortest reasonable time frame possible. If Griffith believes in good faith and upon substantial evidence that the County is in default of any of its obligations hereunder, and such default does or may imminently result in insufficient water being available to the Plant, then Griffith shall have the right, following discussions with the County and upon at least two (2) days prior written notice to the County during which period the County fails to cure such default so as to eliminate the threat of insufficient water being available to the Plant, to immediately remedy any and all such defaults in any manner deemed reasonable by Griffith, provided, however, that all such determinations by Griffith shall be made in accordance with Prudent Water Utility Practices. Griffith's right to cure shall continue until the County has fully cured all such defaults. In such circumstances, Griffith shall have all rights and powers needed to restore and assure the delivery of adequate water to the Plant and Griffith and the County shall cooperate in the exercise of same. Except as otherwise specifically set forth in this Agreement, with respect to any default of the County under this Agreement, Griffith shall also be entitled to do any one or more of the following: (i) seek alternative water supplies and (ii) obtain specific performance of any or all of the County's obligations hereunder. It shall not be deemed a default of the County if the Water System becomes temporarily disabled due to an event of Force Majeure as defined in Section 25 below, provided that the County promptly commences and diligently pursues appropriate repairs to completion within the shortest reasonable time frame possible.

12.3. Limitation of Liability. All remedies shall be cumulative and not exclusive except to the extent expressly provided below in this paragraph. In addition to their respective rights and remedies under the above provisions of this Section, each party shall also have all such additional rights and remedies as may be available to such party under this Agreement or applicable law, except as follows: (i) The County shall have no liability for consequential damages or lost profits of Griffith; (ii) the County's liability for damages to Griffith and NAEP is expressly and cumulatively limited to an annual cap of five hundred thousand dollars ($500,000) plus any funds in the Capital Reserve/Replacement Account.

12.4. Indemnity. Griffith agrees to hold harmless, defend and indemnify the County, and its officers, employees attorneys and agents, from and against any and all third party claims, suits, actions, debts, damages (including foreseeable and unforeseeable consequential damages), costs, losses, obligations, judgments, charges, and expenses (including attorneys' fees), that arise from provision of electricity from the Griffith Plant, provided that Griffith shall have the right to select and manage defense counsel. This indemnity in no way limits Griffith's remedies for County default under Sections 12.2 and 12.3

Section 13. Applicable Law. This Agreement shall be governed by and interpreted in accordance with the laws of the State of Arizona. The parties agree to stipulate that exclusive

venue for any action brought by either party to enforce this Agreement shall be in Maricopa County Superior Court, Phoenix, Arizona.

Section 14. Confidentiality. The County agrees to protect, to the extent permitted by law, the confidentiality of any proprietary information, trade secrets, other sensitive materials or confidential information of Griffith made available to the County prior to or during the term of this Agreement, provided that Griffith has clearly identified any such item as being confidential and not subject to release and so advised the County in writing of such confidentiality prior to any release of such item by the County.

Section 15. Attorney's Fees. In the event any legal proceedings, including arbitration, are instituted with respect to this Agreement, the substantially prevailing party shall be entitled, among other remedies, to recover reimbursement for their reasonable attorney's fees, court costs and other related expenses incurred in connection therewith.

Section 16. Entire Agreement of Parties. This Agreement constitutes the entire agreement of the Parties with respect to the specific subject matter hereof, and amends and supersedes in their entirety the Water Interconnection and Supply Agreement dated April 26, 1999, and the Connection Fee Agreement (Amendment No. 1 to the Water Interconnection and Supply Agreement) dated October 10, 2000. This Agreement may not be modified or rescinded except in writing signed by both Parties, and any attempted oral modification shall be void.

Section 17. No Third-party Beneficiaries. Except for those limited benefits specified for Northern Arizona Energy, LLC, there are no third party beneficiaries of this Agreement, and no third party shall be entitled to claim any right or interest under or by reason of this Agreement or to enforce any provision of this Agreement.

Section 18. Notices. All notices under this Agreement shall be in writing or by facsimile and shall be effective on the earlier of (i) the date when delivered in care of the address of such party set forth in this Agreement or the facsimile number so set forth or (ii) the date which is 3 days after mailing, postage prepaid, by certified or registered mail, return receipt requested, to such address. Each party may change their address or facsimile number by giving notice to the other party.

Section 19. Additional Acts. Each party shall do all such things and execute and deliver such other documents and instruments as may be reasonably necessary to effectuate this Agreement.

Section 20. Assignments; Binding Nature. This Agreement shall be binding upon and inure to the benefit of the parties hereto and their respective permitted successors in interest and assigns, but in no event shall a party be relieved of its obligations hereunder without the express written consent of the other party. Griffith may freely assign its rights and interests under this Agreement upon thirty (30) days prior written notice to the County. Griffith shall provide the County a copy of the assignment instrument within 10 days after any such assignment. The County shall not assign any of its rights and interests herein unless approved in writing by Griffith prior to such assignment. Except as specifically permitted herein, any purported assignment or transfer of all or any part of either Party's rights in or interest under this Agreement shall be void.

Section 21. Exhibits. The lettered Exhibits and Appendices referred to in this Agreement and attached hereto are hereby incorporated as part of this Agreement as if each were set forth in its entirety in the text of this Agreement.

Section 22. Severability. In the event any provision of this Agreement is declared to be unenforceable by a court of competent jurisdiction, the remaining provisions of this Agreement shall remain in full force and effect and the parties shall renegotiate the terms of this Agreement in good faith so as to preserve to the maximum extent possible the benefits and burdens intended to be accorded each party under this Agreement.

Section 23. Expenses of Negotiation. Upon execution of this Agreement by both Parties, the County shall invoice Griffith for, and within 30 days after receipt of such invoice Griffith shall reimburse the County for, up to Sixty Thousand Dollars ($60,000.00) of attorneys' fees actually incurred by the County in connection with this Agreement and/or the ongoing NAEP permitting proceedings; and, except for such reimbursement, each party agrees to bear its own expenses incurred in connection with negotiating and executing this Agreement.

Section 24. Force Majeure. Neither party shall be liable for failure to carry out any of its obligations under this Agreement if such failure is caused by Force Majeure. A party rendered unable to fulfill any obligation under this Agreement by Force Majeure must make reasonable efforts to remove the inability in the shortest reasonable time consistent with commercial practicability, and shall notify the other party in writing of such inability and the cause thereof within forty-eight (48) hours of the commencement thereof, of all efforts made to remove the inability, and of the time when the inability is removed. The time for completion of each delayed obligation shall be adjusted as necessary and agreed upon between the parties.

"Force Majeure" means any cause beyond the control of the party affected, and which the party affected is unable to overcome by reasonable efforts, including without limitation, acts of God, fire, flood, drought, landslide, lightning, earthquake, hurricane, tornado, storm, freeze, volcanic eruption, blight, famine, epidemic or quarantine, casualty, war, invasion, civil disturbance, explosion, or acts of public enemies and land subsidence.

Section 25. Conditions to County's Obligations. The County's obligations set forth in this Agreement are expressly conditioned upon and subject to all federal, state and local permits, consents, certificates and other authorizations, if any, and the County agrees that it will make all reasonable efforts to timely obtain, and thereafter comply with the terms and conditions of, such permits, consents, certificates and other authorizations.

Section 26. Authorization. This Agreement becomes effective only after approval by the Board of Supervisors of the County and the Manager(s) of Griffith Energy LLC, and after being duly executed on behalf of each of the parties. Each party represents and warrants to the other party that this Agreement has been duly authorized, executed and delivered, that the person signing this Agreement on behalf of such party has full authority and power to do so, and that this Agreement is binding on such party in accordance with its terms. Each party further represents and warrants to the other party that such party has the full power and authority to enter into this Agreement and to perform all of such party's obligations hereunder pursuant to applicable laws in effect as of the date of this Agreement. Among other provisions of law, the Board of Supervisors of the County has authority to engage in economic development activities such as those

contemplated herein pursuant to A.R.S. Sections 11-251 et seq., 11-254 and 11-254.04.

Section 27. NAEP Agreement. This Agreement is expressly conditioned upon the County's concurrent execution of the NAE Agreement and this Agreement. However, the NAE Agreement will not become effective unless and until (i) Griffith and the County sign the NAEP Addendum and (ii) NAE signs the NAE Agreement.

Section 28. County Cooperation. The County covenants that it will cooperate with and will not oppose NAE's efforts to develop the NAEP and obtain all permits, including but not limited to, the Certificate of Environmental Compatibility from the Arizona Corporation Commission and an affirmative decision by Western Area Power Administration of no significant environmental impacts in accordance with the National Environmental Policy Act process. Further, the County and Griffith agree to discuss the mutual feasibility of a transfer of a portion of Water System to Griffith.

Section 29. A.R.S. Section 38-511. This Agreement is subject to the provisions of A.R.S. Section 38-511.

IN WITNESS WHEREOF, and intending to be bound hereby, the parties have executed this Revised and Restated Water Interconnection and Supply Agreement as of the date first written above.

GRIFFITH ENERGY LLC,
a Delaware limited liability company

By:_____
Its: _____

Address for notices:

Griffith Energy LLC
P. O. Box 3519
Kingman, AZ 86402-3519

Telephone 928-718-0102

COUNTY OF MOHAVE,
a political subdivision of the State of Arizona

By:_____
Its:_____

Address for notices:

Mohave County Manager
P. O. Box 7000
Kingman, Arizona 86402-7000

telephone 928-753-0729
facsimile 928-753-0732

APPROVED AS TO FORM:

_____
Robert A. Taylor
Chief Civil Deputy County Attorney

Appendix 1
2007/2008 Fiscal Year Water System Budgets

Referenced in Section 6.2.1 – To be provided by the County

850 - I-40 WATER CORRIDOR PROJECT	2006-2007 Budget	2006-2007 Actual	2007-2008 Adopted Budget
85094950 - I-40 IND DEV WATER OPERATIONS			
Revenues			
34000 - COST SHARING REVENUE	-1,319,779	-424,438	-944,037
34170 - FEES	-4,000	0	0
39425 - WATER SALES	-150,000	-118,345	0
39100 - INTEREST EARNINGS	-20,000	-32,726	0
39200 - RENTS FROM LAND BUILDINGS	-1,680	-1,120	-1,680
39510 - PRIVATE INDUSTRY CONTRIBUTIONS	0	-106,836	0
39000 - MISCELLANEOUS REVENUES	-383,400	-1,207	0
39920 - OPERATING TRANSFERS IN	0	0	-104,893
Total Revenues	-1,878,859	-684,671	-1,050,610
Expenditures			
40110 - SALARIES/WAGES	181,514	139,361	187,491
40120 - OVERTIME	8,000	6,335	8,000
40210 - EMPLOYEE BENEFIT FICA	14,486	10,913	14,343
40230 - COUNTY HEALTH INSURANCE	37,387	25,998	40,249
40240 - WORKERS COMP	6,049	2,004	6,233
40260 - STATE RETIREMENT	16,518	13,264	17,999
Total Salaries and Benefits	263,954	197,874	274,315
41100 - OFFICE SUPPLIES	500	540	500
41130 - TECHNICAL SERVICES SUPPLIES	3,000	734	1,000
41260 - FUEL OIL AND LUBRICANTS	3,000	4,462	4,500
41290 - MISCELLANY OPERATING SUPPLIES	200	689	200
41360 - MOTOR VEHICLE REPAIR MATERIALS	300	549	500
41400 - TOOLS & EQUIPMENT UNDER $1000	1,000	476	500
Total Supplies	8,000	7,449	7,200
43120 - DATA PROCESSING SERVICES	2,832	2,832	2,699
43175 - TESTING COSTS	15,000	1,166	1,500
43180 - TRAINING COSTS	1,000	104	1,000
43190 - OTHER OUTSIDE SERVICES	70,000	5,596	70,000
43210 - TELEPHONE	4,500	4,419	4,964
43215 - TELEPHONE COMPUTER DATA	83	83	128
43230 - POSTAGE	200	1	50
43310 - TRAVEL EXPENSES	500	0	0
43530 - COPIER CONTRACT	300	477	300
43650 - LIABILITY INSURANCE	82,500	105,470	56,500
43710 - ELECTRICITY EXPENSE	807,649	418,862	600,000
43810 - LEASE COMPUTER (IT ONLY)	1,580	1,580	500
43860 - BUILDING LEASES	1,680	1,680	1,680
43910 - R&M AUTOMOTIVE	1,000	1,710	1,000
43940 - R&M COMMUNICATION	500	0	500
43945 - R&M COMPUTER EQUIP	500	0	500
43948 - R&M SOFTWARE	5,000	3,130	3,000
44002 - DEPRE - IMPROV.OTHER THAN BLDG	447,410	0	447,410
44003 - DEPRECIATION-EQUIPMENT	5,471	0	5,471
44060 - CENTRAL SERVICE CHARGES	20,909	20,909	10,363
47930 - MEMBERSHIP DUES SUBSCRIPTIONS	500	151	500
Total Other Services and Charges	1,469,114	568,170	1,208,065
45120 - OPERATING TRANSFERS OUT	0	0	977,155
Debt Service	0	0	977,155
48499 - IMPROVEMENTS-OTHER INFRASTRUCT	300,000	MOHAVE-008	0
48595 - SECURITY EQUIPMENT	34,777	36,208	0

850 - I-40 WATER CORRIDOR PROJECT	2006-2007 Budget	2006-2007 Actual	2007-2008 Adopted Budget
85094950 - I-40 IND DEV WATER OPERATIONS			
Expenditures			
Total Capital	334,777	36,208	0
Total Expenditures	2,075,845	809,701	2,466,735
Net total for 85094950 - I-40 IND DEV WATER OPERATIONS	196,986	125,030	1,416,125

Appendix 2
Operation and Maintenance Account and Capital Reserve Replacement Account Balances as of June 30,2007

Referenced in Section 6.3.4 - to be provided by the County

DEP DATE	Paid out	Received		
	BALANCE FORWARD		**$631,418.71**	
			90%	**10%**
07/06/2006		Prime South	$13,171.50	$1,463.50
08/04/2006		Prime South	$13,171.50	$1,463.50
09/08/2006		Prime South	$13,171.50	$1,463.50
10/06/2006		Prime South	$13,171.50	$1,463.50
11/17/2006		Prime South	$13,171.50	$1,463.50
12/08/2006		Prime South	$13,171.50	$1,463.50
01/12/2007		Prime South	$13,171.50	$1,463.50
01/31/2007		Prime South	$13,171.50	$1,463.50
03/07/2007		Prime South	$13,171.50	$1,463.50
04/10/2007		Prime South	$13,171.50	$1,463.50
04/19/2007	Security Equip		-$34,777.00	
06/29/2007	Well No. 5		-$31,401.40	
05/23/2007		Southwest Power Partners	$13,171.50	$1,463.50
			$710,126.81	**$16,098.60**
		Balance	**$726,225.41**	

EXHIBIT A

Water System

The Water System consists of the existing six (6) water production wells, the monitoring well, the water delivery system and the storage system presently owned and operated by Mohave County.

The water production well sites are currently numbered as Well Numbers 5, 6, 7, 8, 9 and 10.

The water delivery system consists of the existing pipelines, 12 inches, 16 inches, 18 inches and 20 inches in diameters, connecting the wells sites to the steel storage tank, which has a storage capacity of approximately 1.5 million gallons.

EXHIBIT B
NAE AGREEMENT

WATER INTERCONNECTION AND SUPPLY AGREEMENT

(Mohave County / Northern Arizona Energy, LLC)

This Water Interconnection and Supply Agreement (the "Agreement") is entered into by and between Northern Arizona Energy, LLC, a Delaware limited liability company ("NAE"), and the County of Mohave, a political subdivision of the State of Arizona (the "County"), as of date that NAE signs this Agreement (the "Effective Date").

Recitals

A. The County operates a water system consisting of the six (6) production wells, a monitoring well, a water delivery system and a storage system, all of which are further described on Exhibit A and are collectively defined for purposes of this Agreement as the "Water System".

B. On _____, the County and Griffith Energy, LLC ("Griffith") executed that certain NAEP Addendum (the "Addendum") to the Revised and Restated Water Interconnection and Supply Agreement dated September 4, 2007 ("The Griffith Agreement"). Pursuant to the Addendum, the County and Griffith agreed to reduce the County's capacity commitment under the Griffith Agreement to supply water to Griffith's nominal 600 MW electric generating plant located near the Griffith Interchange at I-40, in Mohave County (the "Griffith Facility"), and to make available to NAE, 450 gallons per minute ("gpm") of capacity from the Water System to meet the water requirements of NAE's new electric generating plant, the Northern Arizona Energy Project ("NAEP or "Plant"), which will consist of four (4) simple cycle combustion turbine generators having a combined nominal generating capacity of 175 megawatts.

C. Therefore, NAE and the County are entering into this Agreement to set forth the water supply terms and conditions for the Plant as a separate agreement from the Griffith Agreement.

Section 1. Definitions.

1.1 Available Water System Production Capacity shall mean the gallons per minute of actual production capacity of the Water System.

1.2 Capital Reserves/ Replacement Account shall mean the cash reserves reasonably necessary to provide for the repair and replacement costs of major components of the Water System, including but not limited to spare parts and modifications to Water System components, but expressly excludes any reimbursement of prior County capital expenditures for the Water System.

1.3 NAEP Maximum Contract Capacity shall mean four hundred fifty gallons per minute (450 gpm).

1.4 Operation and Maintenance Costs shall mean the direct costs of personnel, administration, engineering, testing, tools, equipment, labor, materials, subcontractors, electric power, supplies, replacement, spare parts, insurance and all other direct costs and expenses required and incurred to operate and maintain the Water System, but shall not include any

allocation of County general administrative overhead costs or any reimbursement of prior County capital expenditures for the Water System.

1.5 Prudent Water Utility Practices shall mean the practices, methods, and acts engaged in or approved by a significant portion of the water utility industry in the State of Arizona during the relevant time period, or the practices, methods, and acts that, in the exercise of reasonable judgment in the light of the facts known at the time the decision was or is to be made, could have been expected to accomplish the desired result of managing, operating, and maintaining the Water System at a reasonable cost, reliability, safety, and expedition. Prudent Water Utility Practices does not require the use of the optimum practice, method or act, but only requires the use of acceptable and reasonable practices, methods or acts generally accepted in the State of Arizona.

1.6 Water System shall mean, collectively, the existing six (6) developed operating wells, the monitoring well, the water delivery system and the storage system owned and operated by the County in the Sacramento Valley, all as further described on Exhibit A.

1.7 Water System Aquifer shall mean the Sacramento Valley aquifer accessible south of Oatman Road.

1.8 Water System Capacity shall mean the total production capacity of the Water System, nominally rated at five thousand, seven hundred and fifty (5,750) gallons per minute for purposes of this Agreement.

Section 2. Term. The term of this Agreement shall commence on the Effective Date and shall expire fifty years thereafter. NAE may terminate this Agreement at any time by giving at least six (6) months written notice of termination to the County. The parties agree to negotiate in good faith any water supply requirements of the Plant after the expiration of this Agreement.

Section 3. Water Supply. For the term of this Agreement, the County agrees to use its best efforts to deliver from the Water System to NAE, all pursuant to the other terms set forth in this Agreement, the full water requirement of the Plant up to the NAEP Maximum Contract Capacity on a first priority basis as against all other customers on the Water System. At any time, Griffith and/or NAE may, at it's/their sole expense, develop and use other water supplies and water delivery services, including the development of new production wells in the Water System Aquifer, if necessary to satisfy all or part of the Plant's needs; provided however, that this sentence shall not be construed to diminish NAE's payment obligations, the County's delivery obligation or other obligations under this Agreement with respect to the Water System.

Section 4. Insufficient Available Water System Production Capacity.

4.1. Curtailment Priority. In the event that for any reason the production capacity of the Water System is less than the total customer demand on the Water System from time to time, then the water supply from the Water System to the other non-Griffith customers shall be reduced until the Available Water System Capacity and the Water System customer demand are in balance. With the exception of supply to the Griffith Facility, in no event shall the supply to the Plant be interrupted or curtailed until all other non-Griffith customer demand being served from the Available Water System Production Capacity has been curtailed or eliminated as necessary to fulfill NAE's requirement.

4.2. Emergency Water Supply. In the event that for any reason the Available Water System Production Capacity is less than the combined full water requirement of the Griffith Plant and the NAEP, then under such emergency conditions the County shall use reasonable efforts, consistent with the County's other contractual service obligations to other water users, to supply Griffith and NAE any such shortfall of water from any other well(s) or water delivery system(s) that may be owned or operated by the County, if any, until the Water System is restored to its full capacity. NAE shall reimburse the County for all costs incurred to provide such emergency water supply. Reciprocally, any excess Available Water System Production Capacity not required for NAEP, Griffith or other Water System customers may be utilized by the County to provide temporary emergency water service to other County water customers, if any, on the same terms and conditions as applied to emergency service for NAE, including cost reimbursement obligations.

Section 5. Water System Capacity

5.1. Water System Capacity. For purposes of this Agreement, the Water System Capacity has been established to be 5,750 gallons per minute.

5.2. Additional Production. The Parties acknowledge and agree that the County is under no obligation to develop additional production wells or expand the production capability of the Water System, other than if mutually agreed upon in order to maintain the existing Water System Capacity. If, however, independent of this Agreement, the County develops or assumes from third parties the ownership and/or operation of additional well(s) and production capacity, then in order to ensure the integrity of the Water System and the County's ability to perform its obligations under this Agreement, the following shall apply: (1) if such additional well(s) are drilled within two miles of the Water System's existing wells, then the County shall integrate such additional well(s) with the Water System in accordance with Prudent Water Utility Practice if (i) the County believes in its reasonable discretion that interconnection is feasible and will be beneficial to the operation of the Water System and the additional well(s), and (ii) the integration is acceptable to any third parties having rights to the additional well(s); and (2) if such additional well(s) are drilled beyond two miles of the Water System's existing wells, then the County may, at the County's discretion, integrate such well(s) with the Water System. In no event shall the rights of Griffith extend beyond the Water System as defined herein, except as may be provided in other provisions in this Agreement or in subsequent reciprocity agreements.

Section 6. Invoices, Payments and Reporting

6.1. Invoices. The County shall invoice NAE, and NAE shall pay the County, for the Plant's water usage on a monthly basis in amounts determined as set forth in this Section. Payment of each invoice shall be due within thirty (30) days after receipt of the invoice by NAE.

6.1.1 NAE's share of the Operation and Maintenance Cost of the Water System and obligation to replenish the Capital Reserves/Replacement Account shall be calculated as follows:

NAEP Maximum Contract Capacity + Water System uncontracted capacity* / Water System Capacity

Example:

Month 1 Operation and Maintenance Cost = $10,000
Month 1 Capital Reserves/Replacement Account replenishment = $700

Total capacity charged to NAE = 450

Water System Capacity = 5,750

450/5750 = 0.0783 (7.83%)

NAE's share of Operation and Maintenance Cost would be 7.83% of $10,000 or $783; and NAE's share of the Capital Reserves/Replacement Account replenishment obligation would be 7.8% of $700, or $54.78.

6.1.2 The County shall include in the monthly invoices and NAE shall pay to the County all State of Arizona water use, sales, transaction privilege, use and other such water supply taxes associated with the County's provision of water delivery services for the Plant as may be actually assessed to the County by, and paid by the County to, the Arizona Department of Revenue or other duly authorized taxing authority on account of such services under laws and regulations in effect from time to time during the term of this Agreement. In addition, if in the future the Count adopts an excise tax or other such tax of general applicability to such services, it shall apply to water delivery to NAE under this Agreement. When accounting for and invoicing NAE for taxes due, the County shall not apply a tax charge to NAE greater than the tax liability actually owed and paid by the County to the taxing authorities.

6.2. Procedure for Determining Amount.

6.2.1 Budgets and Payments. The Operation and Maintenance Cost and Capital Reserve/Replacement Cost Budget for the Water System (the "Budgets") for fiscal year July 1, 2007 to June 30, 2008 are included as **Appendix 1**. For each succeeding year, the annual Budgets shall be established in accordance with the budget process set forth in Section 6.2.2 and shall be based on the prior year's actual costs plus or minus any reasonably anticipated differences in Operation and Maintenance Costs and Capital Reserve/Replacement, and including adjustments to reconcile any overpayments or underpayments by NAE as compared to the actual cash expenditures during the previous fiscal year. NAE's share of the Approved Budgets shall be charged to NAE in 12 equal monthly installments during the following year, regardless of actual water usage by the Plant during any particular month. Any adjustment from the prior fiscal year reconciliation shall be applied to the monthly invoices beginning with the month after the County has closed the prior year's accounting books (typically the end of August) and will be applied in equal installments for the remaining months of that fiscal year.

6.2.2 Budget Consultation. No later than May 1 of each year, the County shall provide the Budgets to NAE and shall hold a Budget consultation meeting with NAE representatives, in conjunction with Griffith representatives, within 30 days of issuance of the Budgets. The Parties will in good faith, jointly review and examine all components of the Budgets, and the County will give due consideration to the integration of NAE's comments and recommendations into the final Budgets to be submitted to the Mohave County Board of Supervisors for approval by August of

each year.

6.3. Reporting. The County and NAE mutually agree to promptly provide upon request by the other party, all data, engineering evaluations and reports specific to the Water System obtained by the County and/or NAE during Water System operations and groundwater monitoring. In addition, the County shall provide to NAE a quarterly report that will include, at a minimum, the following information:

6.3.1 An executive summary of the operations and maintenance of the Water System during the prior quarter;

6.3.2 A description of all maintenance activities that were performed on the Water System during the prior quarter;

6.3.3 A description of the performance of each well and any outages that were experienced during the prior quarter, including cause, outage duration and remedy;

6.3.4 A cash flow statement for each of the accounts used to manage the cash activities for Operations and Maintenance Costs and the Capital Reserve/Replacement Account for the Water System, including beginning balance, payments from customers, expenditures on the Water System and ending balance for the quarter. The cash balance as of June 30, 2007 of each account is presented in **Appendix 2**.

6.4. Water System Funds Management.

6.4.1 Cash Management Cash for the Operations and Maintenance account and the Capital Reserve/Replacement Account shall be managed in separate fund accounts and shall not be commingled with any other County cash accounts. Interest earned on such fund accounts shall accrue to the benefit the system and shall serve to offset future Budgets.

6.4.2 Capital Reserve/Replacement Account Management, Cap, and Emergency Supplement. The Parties agree that the Capital Reserve/Replacement Account shall at no time exceed Five Hundred Thousand ($500,000.00) (the "Reserves Cap"). At any time when the Capital Reserve/Replacement Account balance equals or exceeds the Reserves Cap, the County shall suspend monthly Capital Reserve/Replacement charges until such time as that balance falls below the Reserves Cap. In the event of an emergency requiring capital expenditures for the Water System exceeding the Capital Reserve/Replacement Account balance, and after written notice from the County to NAE setting forth the details of the emergency and the proposed excess capital expenditures, the County shall issue an emergency supplemental budget invoice to the customers of the Water System. The supplemental budget invoice shall include a description of any Water System failures or pending failures, the recommended emergency repairs or other remedies, and a detailed estimate of the cost to perform the work. Within five (5) days of receipt of the supplemental budget invoice from the County, NAE shall pay its allocable share of such funding request. The parties acknowledge that the County cannot obligate County general funds and does not have access to any other financing sources; and, therefore, the County can only advance and perform such emergency repair work to the extent that the funds are available in the Capital Reserves/Replacement Account or are received from the Water System customers pursuant to the supplemental budget invoice.

6.4.3 Separation of Accounting The County shall account for all Operation and Maintenance Cost and Capital Reserves/Replacement Account activity separately as incurred for the Water System and any future expansion of production wells and/or distribution system, and shall maintain books and records in accordance with generally accepted accounting principles so as to provide NAE and other customers with documented verification of the appropriate attributions and allocations of costs.

6.4.4 Audits NAE shall have the right, at NAE's sole expense, to audit all accounts and funds, and all related accounting, operations, maintenance and other books and records, in any manner reasonably related to the Water System and/or its management, operation or maintenance. The County shall fully cooperate with such audits, and NAE shall reimburse the County upon presentation of an invoice and explanation for any material costs incurred by the County in cooperating with such audits.

Section 7. Expansion to Serve New Customers. NAE shall not be responsible or liable under any circumstances or any provision of this Agreement for any capital costs related to any expansion of or improvements to the Water System or any future water-related County-owned facilities made for the purpose of providing new water service to other water users.

Section 8. Shortage of Water Should there be, at any time and for whatever reason, insufficient water in the Water System Aquifer to supply NAE's water requirements through the Water System after implementation of Prudent Water Utility Practices and appropriate capital expenditures, *e.g.,* lowering of pump depth settings, deepening of wells, addition of new wells, etc., and after application of the priority and curtailment provisions of this Agreement, then NAE and the County shall cooperate to address reasonable measures intended to resolve the shortage and access additional water supplies at the expense of NAE and all other users who may elect to benefit from such measures.

Section 9. Operation and Maintenance of Water System. The County shall at all times operate and maintain the Water System in accordance with Prudent Water Utility Practices in order to deliver sufficient water from the Water System to satisfy the water supply obligations of this Agreement. The County shall give NAE access to all wells and other components of the Water System and any other County owned and operated wells in the Water System Aquifer, including any monitoring wells, so that NAE can perform, in its sole discretion and at its sole expense, inspections of the physical Water System.. NAE shall provide the County (i) a copy of any water related compliance reports issued to State or Federal agencies in accordance with NAE's permits to operate and (ii) other studies or reports conducted or authorized by NAE related to the Water System or the Water System Aquifer.

Section 10. Water Pressure and Quality. The County shall operate and maintain the Water System to provide at all times a sufficient minimum pressure to deliver 30 pounds per square inch gauge of water at the interconnection point at the property boundary of the Griffith Facility site referenced to an elevation of 2,490 feet, at a flow rate equal to the sum of the Griffith Maximum Contract Capacity and the NAEP Maximum Contract Capacity. Without limiting the foregoing water pressure obligation, the County shall give NAE at least 90 days prior notice of any change in the Water System of which the County has knowledge that would or may affect the water pressure or water quality at the Griffith Facility site, provided, however, that if the County cannot

reasonably give NAE such 90 days advance notice due to the unexpected nature of any such change, the County, nonetheless, shall give NAE as many days prior notice of the change as reasonably possible.

Section 11. **Use of Improvement District(s) by County**. The parties acknowledge that the Plant site and the Water System are located within the boundaries of the Golden Valley Improvement District No. 2 ("GVID 2"), although such district is currently not functioning. The County agrees that if GVID 2 or any other such applicable special taxing district ever begins actively functioning, the County will take reasonable actions consistent with its legal obligations with respect to the formation and/or approval or expansion of such district(s) and any taxes or assessments assessed with respect thereto in order to prohibit the Water System from being included within, assigned to, or in any other manner made subject to GVID 2 or any other such district in any respect that could alter net economic effect of this Agreement to NAE, except to the extent hereafter approved in writing by NAE at NAE's sole discretion prior to such action.

Section 12. **Defaults and Remedies.**

12.1. Remedies of the County for NAE Default. If NAE is at any time in default of any of its payment obligations hereunder, it shall be subject to a claim for damages. In addition, if the payment default exists with respect to the County's monthly invoices to NAE for water service to the Plant, the County may disconnect water service to the Plant in accordance with the County's standard rules, if any, relating to such water service disconnections; provided, however, that no disconnection may be made sooner than 60 days after NAE's receipt of a separate notice of disconnection from the County or such longer notice as is required by any standard rule of the County and only if NAE fails to pay the overdue amount in full within the notice period, including the County's standard interest and penalties for water service, if any.

12.2. Remedies of NAE for County default. If NAE believes in good faith, at any time, that the County is in default of any of its obligations hereunder, including but not limited to, failure of the County to properly operate or maintain the Water System in accordance with Prudent Water Utility Practices, then NAE shall immediately notify the County and the parties shall, as soon as possible, discuss possible solutions and the County shall promptly commence and diligently pursue an appropriate cure to completion within the shortest reasonable time frame possible. If NAE believes in good faith and upon substantial evidence that the County is in default of any of its obligations hereunder, and such default does or may imminently result in insufficient water being available to the Plant, then NAE shall have the right, following discussions with the County and upon at least two (2) days prior written notice to the County during which period the County fails to cure such default so as to eliminate the threat of insufficient water being available to the Plant, to immediately remedy any and all such defaults in any manner deemed reasonable by NAE, provided, however, that all such determinations by NAE shall be made in accordance with Prudent Water Utility Practices. NAE's right to cure shall continue until the County has fully cured all such defaults. In such circumstances, NAE shall have all rights and powers needed to restore and assure the delivery of adequate water to the Plant and NAE and the County shall cooperate in the exercise of same. Except as otherwise specifically set forth in this Agreement, with respect to any default of the County under this Agreement, NAE shall also be entitled to do any one or more of the following: (i) seek alternative water supplies and (ii) obtain specific performance of any or all of the County's obligations hereunder. It shall not be deemed a default of the County if the Water System becomes

temporarily disabled due to an event of Force Majeure as defined in Section 23 below, provided that the County promptly commences and diligently pursues appropriate repairs to completion within the shortest reasonable time frame possible.

12.3. Limitation of Liability. All remedies shall be cumulative and not exclusive except to the extent expressly provided below in this paragraph. In addition to their respective rights and remedies under the above provisions of this Section, each party shall also have all such additional rights and remedies as may be available to such party under this Agreement or applicable law, except as follows: (i) The County shall have no liability for consequential damages or lost profits of NAEP; (ii) the County's liability for damages to Griffith and NAEP is expressly and cumulatively limited to an annual cap of five hundred thousand dollars ($500,000) plus any funds in the Capital Reserve/Replacement Account.

12.4. Indemnity. NAE agrees to hold harmless, defend and indemnify the County, and its officers, employees attorneys and agents, from and against any and all third party claims, suits, actions, debts, damages (including foreseeable and unforeseeable consequential damages), costs, losses, obligations, judgments, charges, and expenses (including attorneys' fees), that arise from provision of electricity from the Plant, provided that NAE shall have the right to select and manage defense counsel. This indemnity in no way limits NAE's remedies for County default under Sections 12.2 and 12.3.

Section 13. Applicable Law. This Agreement shall be governed by and interpreted in accordance with the laws of the State of Arizona. The parties agree to stipulate that exclusive venue for any action brought by either party to enforce this Agreement shall be in Maricopa County Superior Court, Phoenix, Arizona.

Section 14. Confidentiality. The County agrees to protect, to the extent permitted by law, the confidentiality of any proprietary information, trade secrets, other sensitive materials or confidential information of NAE made available to the County prior to or during the term of this Agreement, provided that NAE has clearly identified any such item as being confidential and not subject to release and so advised the County in writing of such confidentiality prior to any release of such item by the County.

Section 15. Attorney's Fees. In the event any legal proceedings, including arbitration, are instituted with respect to this Agreement, the substantially prevailing party shall be entitled, among other remedies, to recover reimbursement for their reasonable attorney's fees, court costs and other related expenses incurred in connection therewith.

Section 16. Entire Agreement of Parties. This Agreement constitutes the entire agreement of the Parties with respect to the specific subject matter hereof. This Agreement may not be modified or rescinded except in writing signed by both Parties, and any attempted oral modification shall be void.

Section 17. No Third-party Beneficiaries. Except for those limited benefits specified for Griffith Energy, LLC, there are no third party beneficiaries of this Agreement, and no third party shall be entitled to claim any right or interest under or by reason of this Agreement or to enforce any provision of this Agreement.

Section 18. Notices. All notices under this Agreement shall be in writing or by facsimile and shall be effective on the earlier of (i) the date when delivered in care of the address of such party set forth in this Agreement or the facsimile number so set forth or (ii) the date which is 3 days after mailing, postage prepaid, by certified or registered mail, return receipt requested, to such address. Each party may change their address or facsimile number by giving notice to the other party.

Section 19. Additional Acts. Each party shall do all such things and execute and deliver such other documents and instruments as may be reasonably necessary to effectuate this Agreement.

Section 20. Assignments; Binding Nature. This Agreement shall be binding upon and inure to the benefit of the parties hereto and their respective permitted successors in interest and assigns, but in no event shall a party be relieved of its obligations hereunder without the express written consent of the other party. NAE may freely assign its rights and interests under this Agreement upon thirty (30) days prior written notice to the County. NAE shall provide the County a copy of the assignment instrument within 10 days after any such assignment. The County shall not assign any of its rights and interests herein unless approved in writing by NAE prior to such assignment. Except as specifically permitted herein, any purported assignment or transfer of all or any part of either Party's rights in or interest under this Agreement shall be void.

Section 21. Exhibits. The lettered Exhibits and Appendices referred to in this Agreement and attached hereto are hereby incorporated as part of this Agreement as if each were set forth in its entirety in the text of this Agreement.

Section 22. Severability. In the event any provision of this Agreement is declared to be unenforceable by a court of competent jurisdiction, the remaining provisions of this Agreement shall remain in full force and effect and the parties shall renegotiate the terms of this Agreement in good faith so as to preserve to the maximum extent possible the benefits and burdens intended to be accorded each party under this Agreement.

Section 23. Force Majeure. Neither party shall be liable for failure to carry out any of its obligations under this Agreement if such failure is caused by Force Majeure. A party rendered unable to fulfill any obligation under this Agreement by Force Majeure must make reasonable efforts to remove the inability in the shortest reasonable time consistent with commercial practicability, and shall notify the other party in writing of such inability and the cause thereof within forty-eight (48) hours of the commencement thereof, of all efforts made to remove the inability, and of the time when the inability is removed. The time for completion of each delayed obligation shall be adjusted as necessary and agreed upon between the parties.

"Force Majeure" means any cause beyond the control of the party affected, and which the party affected is unable to overcome by reasonable efforts, including without limitation, acts of God, fire, flood, drought, landslide, lightning, earthquake, hurricane, tornado, storm, freeze, volcanic eruption, blight, famine, epidemic or quarantine, casualty, war, invasion, civil disturbance, explosion, or acts of public enemies and land subsidence.

Section 24. Conditions to County's Obligations. The County's obligations set forth in this Agreement are expressly conditioned upon and subject to-all federal, state and local permits,

consents, certificates and other authorizations, if any, and the County agrees that it will make all reasonable efforts to timely obtain, and thereafter comply with the terms and conditions of, such permits, consents, certificates and other authorizations.

Section 25. Authorization. This Agreement becomes effective only after approval by the Board of Supervisors of the County and the Manager(s) of Northern Arizona Energy LLC, and after being duly executed on behalf of each of the parties. Each party represents and warrants to the other party that this Agreement has been duly authorized, executed and delivered, that the person signing this Agreement on behalf of such party has full authority and power to do so, and that this Agreement is binding on such party in accordance with its terms. Each party further represents and warrants to the other party that such party has the full power and authority to enter into this Agreement and to perform all of such party's obligations hereunder pursuant to applicable laws in effect as of the date of this Agreement. Among other provisions of law, the Board of Supervisors of the County has authority to engage in economic development activities such as those contemplated herein pursuant to A.R.S. Sections 11-251 et seq., 11-254 and 11-254.04.

Section 26. NAEP Addendum. This Agreement is expressly conditioned upon Griffith's concurrent execution of the NAEP Addendum to the Griffith Agreement.

Section 27. A.R.S. Section 38-511. This Agreement is subject to the provisions of A.R.S. Section 38-511.

IN WITNESS WHEREOF, and intending to be bound hereby, the parties have executed this Water Interconnection and Supply Agreement as of the date first written above.

NORTHERN ARIZONA ENERGY, LLC, a Delaware limited liability company	COUNTY OF MOHAVE, a political subdivision of the State of Arizona
By:_____ **Its:** _____	**By:**_____ **Its:**_____
Address for notices:	Address for notices:
Northern Arizona Energy, LLC 1735 Technology Drive, Suite 820 San Jose, CA 95110	Mohave County Manager P. O. Box 7000 Kingman, Arizona 86402-7000
Telephone 408-572-1300	telephone 928-753-0729 facsimile 928-753-0732

APPROVED AS TO FORM:

_____
Robert A. Taylor
Chief Civil Deputy County Attorney

EXHIBIT C
NAEP ADDEUNDUM

NAEP ADDENDUM
To
REVISED AND RESTATED WATER INTERCONNECTION AND SUPPLY AGREEMENT
Mohave County / Griffith Energy LLC

This Addendum is attached to and incorporated in that certain Revised and Restated Water Interconnection and Supply Agreement between Mohave County ("County") and Griffith Energy LLC ("Griffith") dated _____, 2007 (the "Griffith Agreement"). The Griffith Agreement provides for water delivery services from the County-owned water system therein described (the "Water System") to Griffith's existing 600 MW electric generating facility (the "Griffith Plant").

1. In consideration of Griffith's execution of the Griffith Agreement, the County has, coincident with the County's execution of the Griffith Agreement, also executed:
   (a) this Addendum, and
   (b) a separate Water Interconnection and Supply Agreement between Mohave County and Northern Arizona Energy, LLC ("NAE") (the "NAE Agreement") providing for water delivery services from the same Water System to meet the water requirements of a planned new nominal 175 MW electric generating facility to be constructed by NAE (the "NAEP Plant") adjacent to the Griffith Plant.

2. Upon the execution of this Addendum by Griffith and the execution of the NAEP Agreement by NAE, then the Griffith Maximum Contract Capacity entitlement to water production from the Water System under the Griffith Agreement is hereby reduced from 4350 gpm to 3900 gpm.

3. This Addendum shall become effective only upon its execution by Griffith, as of the date indicated next to Griffith's signature below. Griffith shall be obligated to execute this Addendum only if and when NAE executes the NAE Agreement.

COUNTY OF MOHAVE
A political subdivision of the State of Arizona

By: _____

Its _____

GRIFFITH ENERGY LLC
A Delaware limited liability company

By: _____

Its _____

Effective Date: _____

APPROVED AS TO FORM:

_____
Robert A. Taylor
Chief Civil Deputy County Attorney

EXHIBIT
M-9
admitted

Sacramento Valley Ground Water Basin

N W E S

0 2.5 5 10 Miles

1:200,000

Depth to Water Below Surface (in feet)

- Less than 500
- 500 to 1000
- Greater than 1000

- Outside of Regional Aquifer Area
- Bedrock
- Water Companies
- I-40 Water System Wells

Source: Kingman Area Groundwater Basin Study by Arizona Department of Water Resources, March 24, 1994

T023NR020W T023NR019W T023NR018W T022NR020W T022NR019W T022NR018W T021NR020W T021NR019W T021NR018W T021NR017W T021NR016W T021NR015W T020NR020W T020NR019W T020NR018W T020NR017W T020NR016W T020NR015W T019NR019W T019NR018W T019NR017W T019NR016W T019NR015W T018NR019W T018NR018W T018NR017W T018NR016W T018NR015W T017NR020W T017NR019W T017NR018W T017NR017W T017NR016W T017NR015W T016 1/2NR020W T016 1/2NR019W T016 1/2NR018W T016 1/2NR017W T016 1/2NR016W T016 1/2NR015W T016NR020W T016NR019W

MINERAL PARK RD
93
68
GVID I
Valley Pioneers Water Company
STOCKTON
HUALAPAI MOUNTAIN RD
DW RANCH RD
OLD HWY 93
HWY
OATMAN
40
FLAG
YUCCA AREA
BORIANA MINE RD
ALAMO RD

The Mohave County Public Works Engineering Division has made every reasonable effort to obtain and maintain this data as accurately as possible, however, human or mechanical error remain a possibility. Mohave County assumes no responsibility arising from the use of this information in its actual or any altered form. The data and maps are provided without warranty of any kind, either expressed or implied. Users are invited to send their comments and report errors to Mohave County Public Works Engineering Department at P.O. Box 7000, 3675 E Andy Devine Ave, Kingman, AZ 86402 (928)757-0910 Fax (928) 757-0912. Publication Date: September, 2007.

I-40 WATER SYSTEM

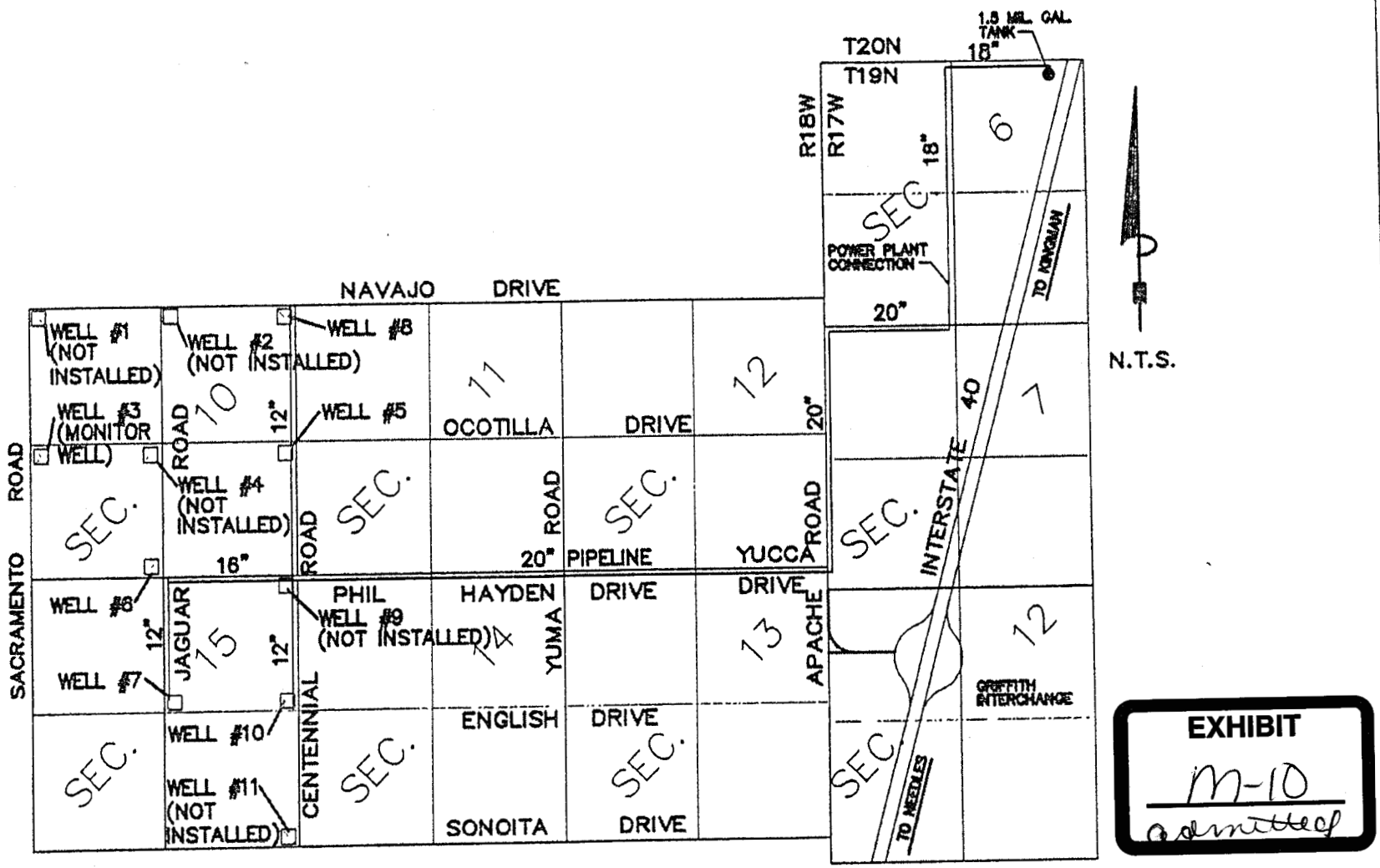

EXHIBIT
M-10
admitted

VICINITY MAP

98–108

MOHAVE-010

EXHIBIT B – 1

I–40 WATER DISTRICT

WITH WELL SITES AND LINE LOCATIONS

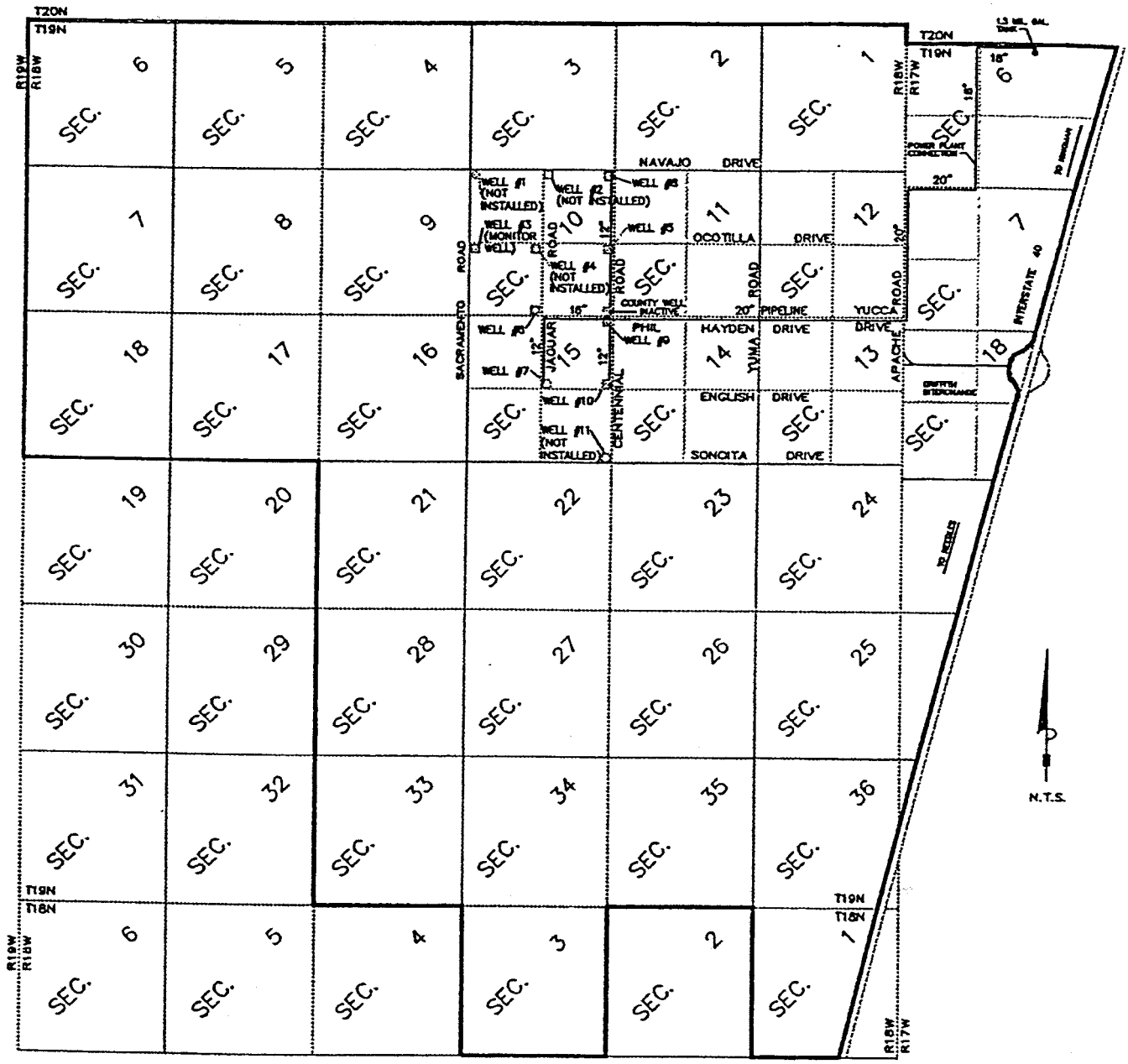

RECEIVED
DEC 0 9 2002
M. C. PUBLIC WORKS

MOHAVE-010

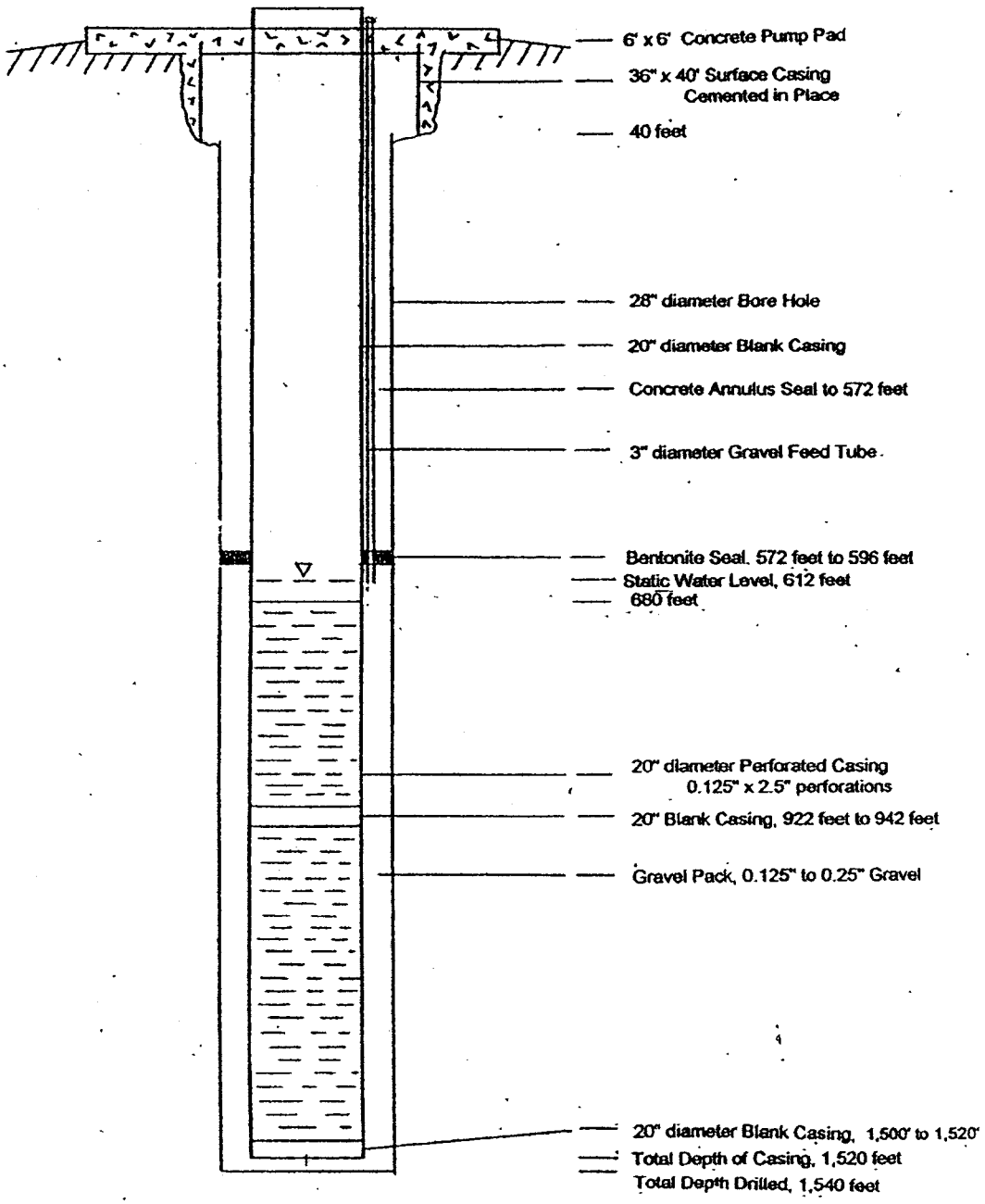

GRIFFITH ENERGY, L.L.C.

SCHEMATIC "AS BUILT" DIAGRAM OF PRODUCTION WELL 5

NE1/4, NE1/4, SE1/4 of Section 10, T. 19 N., R. 18 W.

December 1999

NOT TO SCALE

FIGURE 2

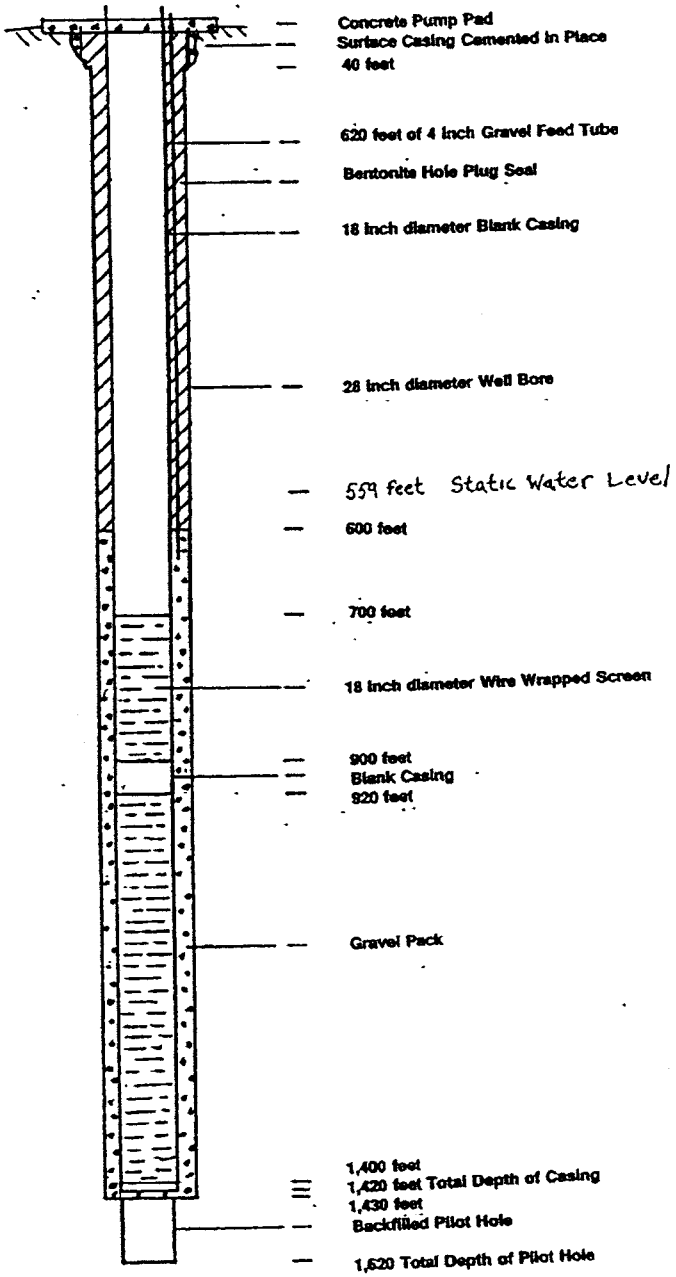

GRIFFITH ENERGY, L.L.C.

SCHEMATIC "AS BUILT" DIGARAM OF PRODUCTION WELL 6

SE¼, SE¼, SW¼ of Section 10, T. 19 N., R. 18 W.

March 1999

NOT TO SCALE

FIGURE 2

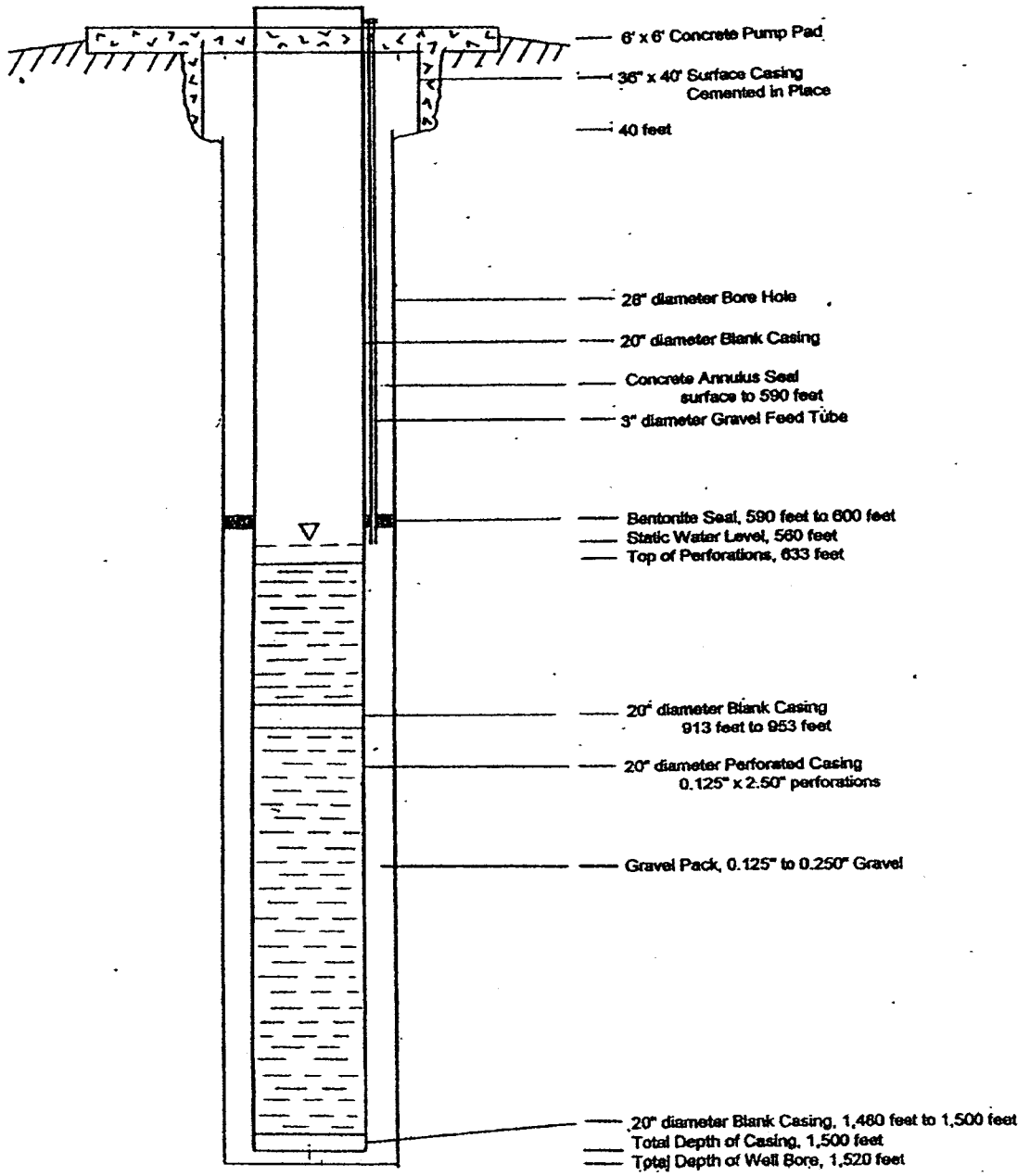

GRIFFITH ENERGY, L.L.C.

SCHEMATIC "AS BUILT" DIAGRAM OF PRODUCTION WELL 7

SW1/4, SW1/4, NE1/4 of Section 15, T. 19 N., R. 18 W.

March 2000

NOT TO SCALE

FIGURE 2

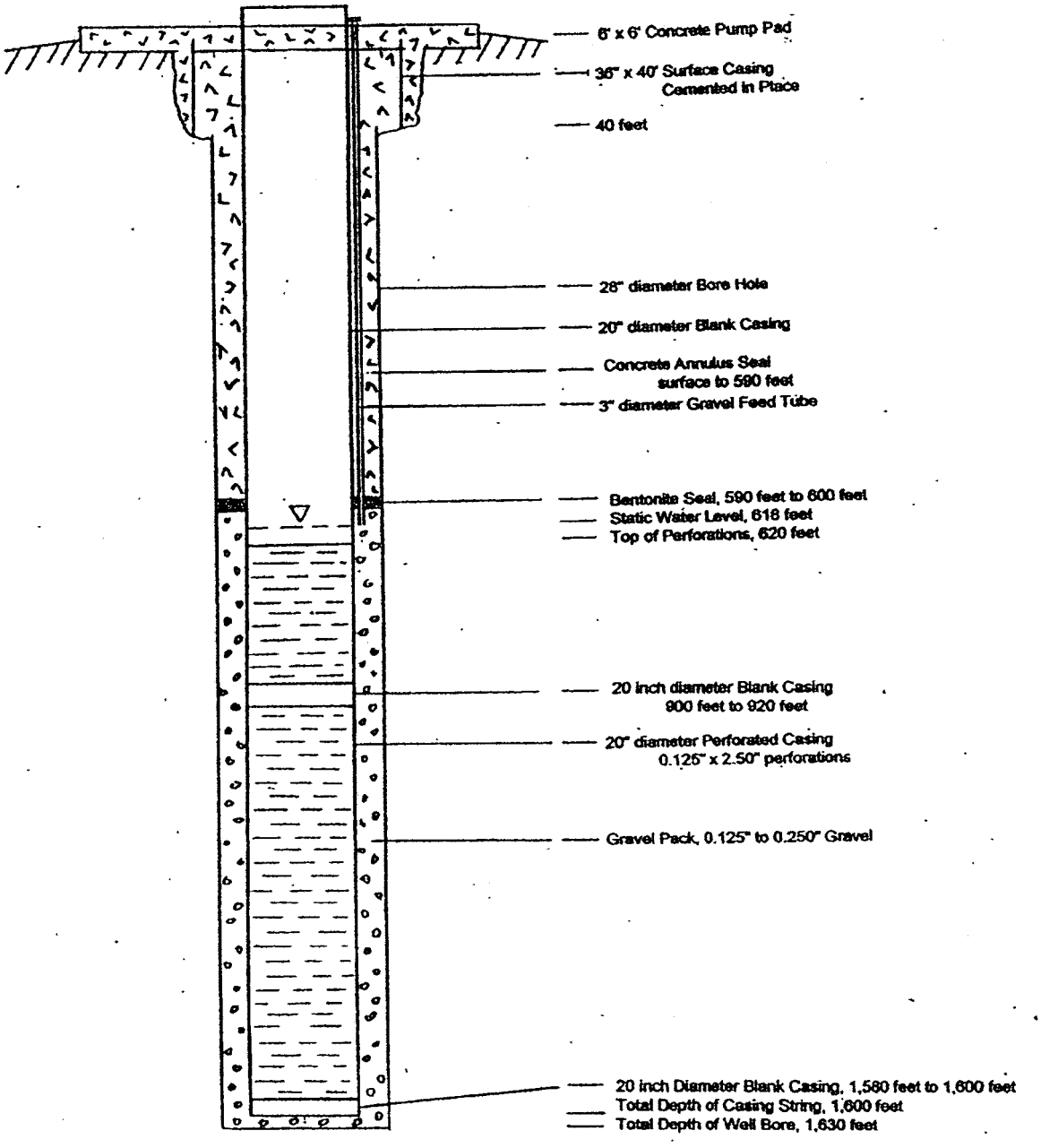

GRIFFITH ENERGY, L.L.C.

SCHEMATIC "AS BUILT" DIAGRAM OF PRODUCTION WELL 8

NE1/4, NE1/4, NE1/4 of Section 10, T. 19 N., R. 18 W.

May 2000

NOT TO SCALE

FIGURE 2

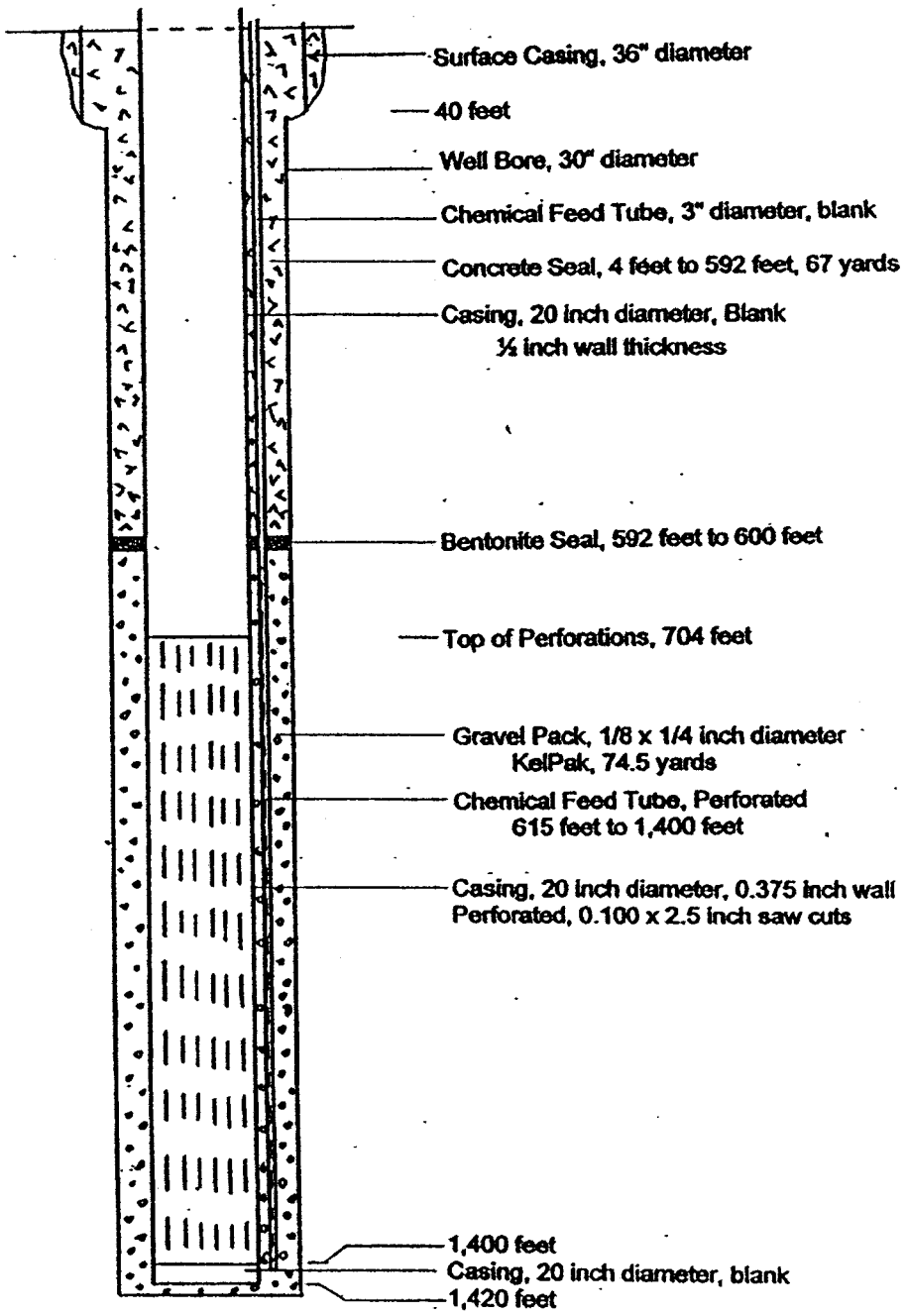

Registered Professional Engineer, Geological
CERTIFICATE NO
6607
PAUL A.
MANERA
7/3/01
ARIZONA USA

Paul A. Manera

MOHAVE COUNTY

Department of Public Works

GRIFFITH WELL 9

NE1/4, NE1/4, NE1/4 of Section 15, T. 19 N., R. 1 E.

SCHEMATIC "AS BUILT"

NOT TO SCALE
June 2001

MANERA, INC.

MOHAVE-010

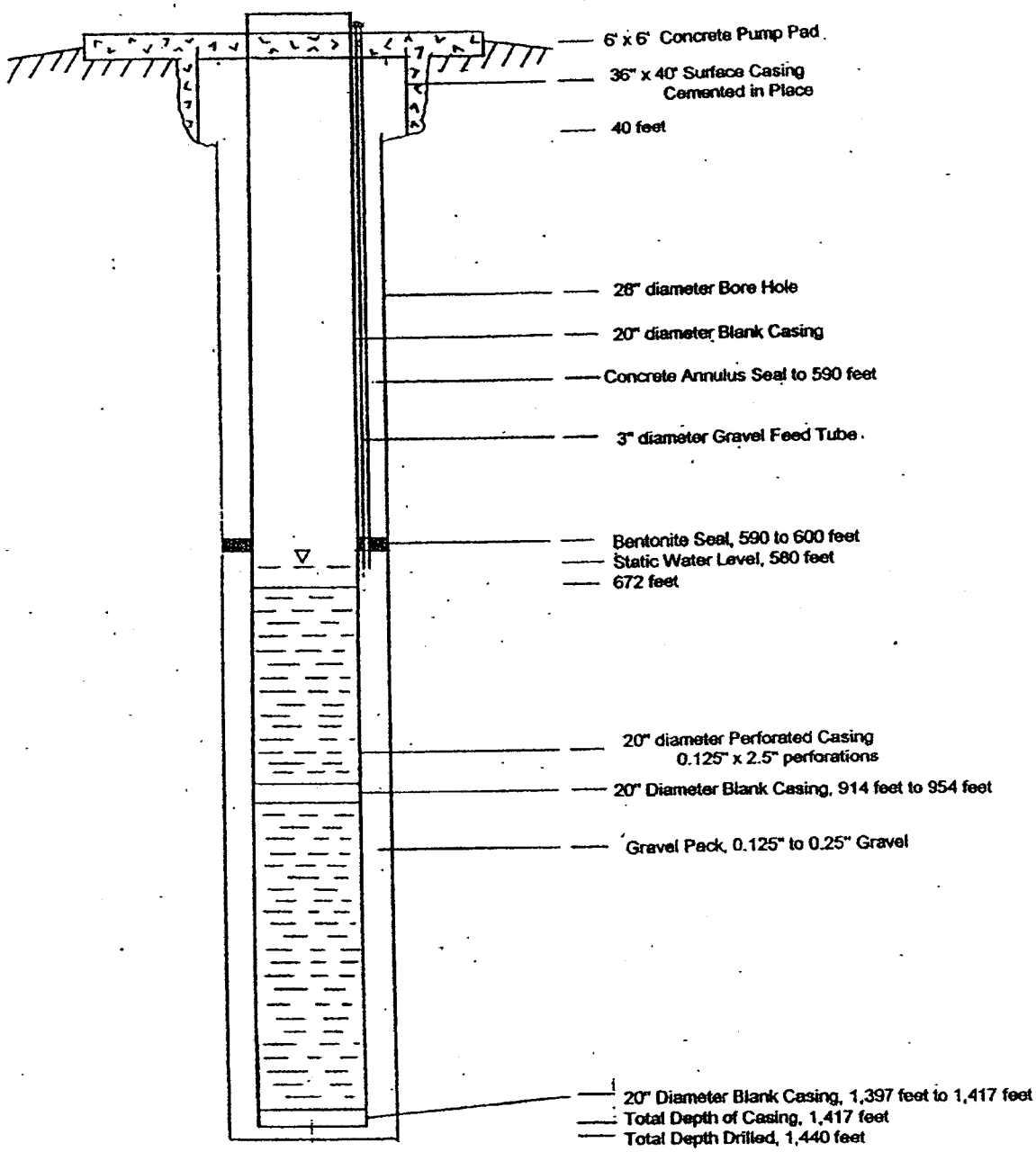

GRIFFITH ENERGY, L.L.C.

SCHEMATIC "AS BUILT" DIAGRAM OF PRODUCTION WELL 10

SE1/4, SE1/4, NE1/4 of Section 15, T. 19 N., R. 18 W.

February 2000

NOT TO SCALE

FIGURE 2

I-40 REPLACEMENT COSTS AND TIMELINE

	FISCAL 2006-07	FISCAL 2007-08	FISCAL 2008-09	FISCAL 2009-10	FISCAL 2010-11	FISCAL 2011-12	
WELL # 5 Re-installed 2003			-$181,035.00				
WELL # 6 Re-installed 2006					-$141,447.00		
WELL # 7 Re-installed 2002	-$158,123.00					-$151,348.00	
WELL # 8 Re-installed 2005				-$132,193.00			
WELL # 9	-$90,838.00						
WELL # 10		-$169,192.00					
SPARE EQUIPMENT							
TRUCK		-$40,000					
SCADA, TANK, WATER LINES	-$50,000	-$50,000	-$50,000	-$50,000	-$50,000	-$50,000	
TOTALS	-$298,961	-$259,192	-$231,035	-$182,193	-$191,447	-$201,348	-$1,364,176

C:\DOCUME~1\hontn\LOCALS~1\Temp\I-40 REPLACEMNT COSTS

404-080-56

GRIFFITH ENERGY

Administrative Office:
3003 N. Central Avenue
Suite 1250
Phoenix, AZ 85012
602-604-2136
fax: 602-604-2188

Site Office:
3375 W. Navajo Drive
P.O. Box 3519
Kingman, AZ 86401
928-718-0102
fax: 928-718-0727

April 17, 2002

EXHIBIT
M-11
admitted

Arizona Department of Water Resources
Attn: Mr. Greg Wallace, Chief Hydrologist
500 North Third Street
Phoenix, AZ 85004

Subject: Griffith Energy Project Report in Compliance with Certificate of Environmental Compatibility Issued by the Arizona Corporation Commission

Gentlemen:

As required under conditions 4 and 5 of Griffith Energy LLC's Certificate of Environmental Compatibility, enclosed are the following: (1) Subsidence Monitoring Report; and (2) a graph depicting the real time readouts of 2001 changes in depth to water below ground level in the monitor well at the Mohave County Griffith Well field.

As the certified engineer's report states, there has been no subsidence of the benchmark monument since installed in November of 1998.

The aquifer water level at the well field monitoring well dropped from approximately 581.5 feet in March, 2001 to the 585.5 foot level in January 2002.

Finally, Peter Kaleta, P.E., Engineering Manager, Mohave County Water Division reports that the total Griffith Project water use for 2001 was just under 370 million gallons (369,667,000) or slightly over one million gallons per day, average.

If you have any questions, please call Chet Vasey at (928) 718-0102 ext. 227, or Jay Moyes at (602) 604-2106.

Sincerely,

Chet Vasey

Chet Vasey
Environmental Safety Manager
Griffith Energy Project

cc: Bill Alkema
Jay Moyes

MOHAVE ENGINEERING ASSOCIATES, INC.

- CONSULTING CIVIL ENGINEERS & LAND SURVEYORS -

Robert L. Schuetz, P.E.
Vice President / Engineering Mgr.

John A. Proffit, P.E.
President

Thomas R. Christopher, R.L.S.
Vice President / Surveying Manager

March 25, 2002

Mr. Chet Vasey,
Environmental Safety Manager
Griffith Energy, L.L.C.
P.O. Box 3519
Kingman, Arizona 86402

Dear Mr. Vasey,

I, Thomas R. Christopher, Land Surveyor in the State of Arizona, Registration No. 24514 hereby state the following:

That during the period ending March 15, 2002, Mohave Engineering Associates, Inc., under my direct supervision, completed a differential level run from the National Geodetic Survey Bench Mark designated as S 484, located in the Northwest quarter of Section 18, Township 19 North, Range 17 West to the Subsidence Benchmark set by Mohave Engineering Associates, Inc. in November, 1998, located in the Southeast quarter of the Southwest quarter of Section 10, Township 19 North, Range 18 West of the Gila and Salt River Meridian, Mohave County, Arizona.

The results of this differential level circuit indicate that there has been no subsidence or elevation change at the Subsidence Monument from the time the original level circuit was performed on November 20, 1998 and the current level circuit completed on March 15, 2002.

Respectfully,

Thomas R Christopher

Thomas R. Christopher, R.L.S. 24514

REGISTERED LAND SURVEYOR
CERTIFICATE NO.
24514
THOMAS R.
CHRISTOPHER
Date Signed 3/25/2002
ARIZONA U.S.A.

405 E. Beale St. • Kingman, AZ 86401 • Ph. 928-753-2627 • FAX 928-753-9118

Griffith#1

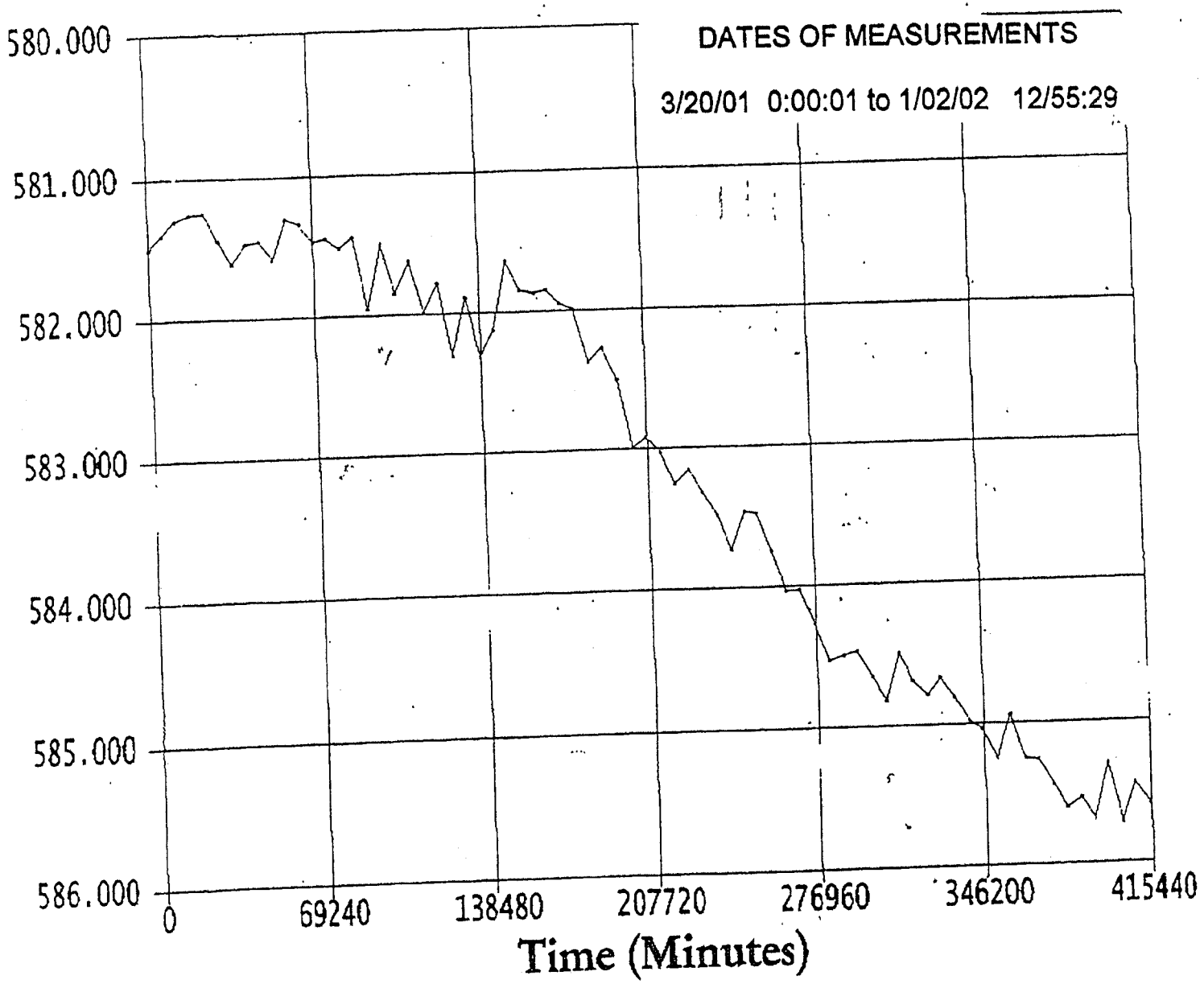

[1] - OnBoard Pressure

PRIMESOUTH
GRIFFITH ENERGY
A SCANA COMPANY

TRANSMITTAL SHEET

TO: Peter Coleta	FROM: Clet Vasy
COMPANY:	DATE:
FAX NUMBER:	TOTAL NO. OF PAGES INCLUDING COVER: pages 4
PHONE NUMBER:	PHONE 928-718-0102
RE:	FAX 928-718-0727

☐ URGENT ☐ FOR REVIEW ☐ PLEASE COMMENT ☐ PLEASE REPLY ☐ PLEASE RECYCLE

NOTES/COMMENTS:

Environmental Compatability Report

3375 W NAVAJO DRIVE, KINGMAN, AZ 86401
REMIT TO: P.O. BOX 3819, KINGMAN, AZ 86402

* * * Transmission Result Report(MemoryTX) (Aug.12. 2002 11:58AM) * * *

1)
2)

Date/Time: Aug.12. 2002 11:56AM

File No.	Mode	Destination	Pg(s)	Result	Page Not Sent
9290	Memory TX	5652850	P. 4	OK	

Reason for error
E.1) Hang up or line fail
E.2) Busy
E.3) No answer
E.4) No facsimile connection

PRIMESOUTH
GRIFFITH ENERGY
A SCANA COMPANY

TRANSMITTAL SHEET

TO: Peter Colta
FROM: Art Vasey
COMPANY:
DATE:
FAX NUMBER:
TOTAL NO. OF PAGES INCLUDING COVER: pages 4
PHONE NUMBER:
PHONE: 928-718-0102
RE:
FAX: 928-718-0727

☐ URGENT ☐ FOR REVIEW ☐ PLEASE COMMENT ☐ PLEASE REPLY ☐ PLEASE RECYCLE

NOTES/COMMENTS:

Environmental Compatibility
Report

3573 W NAVAJO DRIVE, KINGMAN AZ 86401
MAILING P.O. BOX 3549 KINGMAN AZ 86402

* * * Transmission Result Report (MemoryTX) (Apr.17. 2002 5:55PM) * * *

1)
2)

Date/Time: Apr.17. 2002 5:54PM

File No.	Mode	Destination	Pg(s)	Result	Page Not Sent
7306	Memory TX	16022749135	P. 3	OK	

Reason for error
E.1) Hang up or line fail
E.2) Busy
E.3) No answer
E.4) No facsimile connection

PRIMESOUTH
GRIFFITH ENERGY
A SCANA COMPANY

TRANSMITTAL SHEET

TO: LuAnn
COMPANY:
FROM: Chet
DATE:
FAX NUMBER:
TOTAL NO. OF PAGES INCLUDING COVER: pages 5
PHONE NUMBER:
PHONE 928-718-0102
RE:
FAX 928-718-0773

☐ URGENT ☐ FOR REVIEW ☐ PLEASE COMMENT ☐ PLEASE REPLY ☐ PLEASE RECYCLE

NOTES/COMMENTS:

Attachments for ADWR Letter

Good Luck !!

Chet

P.S. Please give me a copy of the final signed letter for my files! Letter was emailed! Thanks

3370 W NAVAJO DRIVE, KINGMAN, AZ 86401
REMIT TO P O BOX 1319 KINGMAN AZ 86402

MOHAVE-011

404 - 080 - 56

File Env. GEP
Land Subsidence
Monitoring

April 17, 2002

Arizona Department of Environmental Quality
Water Quality Compliance, 5th Floor
3033 North Central Avenue
Phoenix, AZ 85102

Subject: Griffith Energy Project Conditions For the Certificate of Environmental Compatibility Required By the Arizona Corporation Commission

Dear ,

As required under conditions 4 and 5 of our Certificate of Environmental Compatibility, enclosed is the subsidence monument reading report, a graph showing the cone of depression surrounding the well being monitored for aquifer water levels and an annual water usage for the calendar year 2001.

As the information clearly indicates, there has been little or no effect on the aquifer as a result of plant operation.

As the subsidence report states, there has been no subsidence of the benchmark monument since installed in November of 1998.

The aquifer water level shows a five foot cone of depression around the well (water level dropped from approximately 581.5 feet in March, 2001 down to the 585.5 foot level in January 2002. It is anticipated that the cone of depression will reach an operating equilibrium in conjunction with seasinal fluctuations.

Peter Kaleta, P.E., Engineering Manager Mohave County Water Division, supplied the total estimated water use for 2001. The total for the year was just under 370 million gallons (369,667,000) or slightly over one million gallons per day.

As you are aware, all of the water on site is eventually evaporated back into the environment. If you have any questions, please call Chet Vasey ar (928)-718-0102 ext. 227.

Sincerely,

MOHAVE-011

AUG-29-2003 10:32 FROM:PRIMESOUTH 8052176853 10:32 AM 08/29 P.2/2

404-00054

PRIMESOUTH SM
A SCANA COMPANY

PALMARK SM
A PRIMESOUTH COMPANY

P.O. Box 3519
Kingman, AZ 86402
(928) 718-0102
Fax (928) 718-0727

January 31, 2003

Arizona Department of Water Resources
Attn: Mr. Greg Wallace, Chief Hydrologist
500 North Third Street
Phoenix, AZ 85004

Subject: Griffith Energy Project Report in Compliance with Certificate of Environmental Compatibility Issued by the Arizona Corporation Commission

Gentlemen:

As required under conditions 4 and 5 of Griffith Energy LLC's Certificate of Environmental Compatibility, enclosed are the following: (1) Subsidence Monitoring Report; and (2) a graph depicting the real time readouts of 2002 changes in depth to water below ground level in monitor well no. 3 at the Mohave County Griffith Well field.

As the certified engineer's report states, there has been no subsidence of the benchmark monument since installed in November of 1998.

The aquifer water level at the well field monitoring well maintained from approximately 585.7 feet on January 2, 2002 to the 586 foot level on December 31, 2002.

Finally, Peter Kaleta, P.E., Engineering Manager, Mohave County Water Division reports that the total Griffith Project water use for 2002 was just under 523 million gallons for our first full year of operation (522,962,000).

If you have any questions, please call Chet Vasey at (928) 718-0102 ext. 227, or myself at ext. 222.

Sincerely,

Rex LaMew

Rex LaMew
Plant Manager
Griffith Energy Project

bcc: Jim Parker
Brenda Long
Darren Stephens
David S. Miller
Jay Moyes
~~Title 404-080-56~~

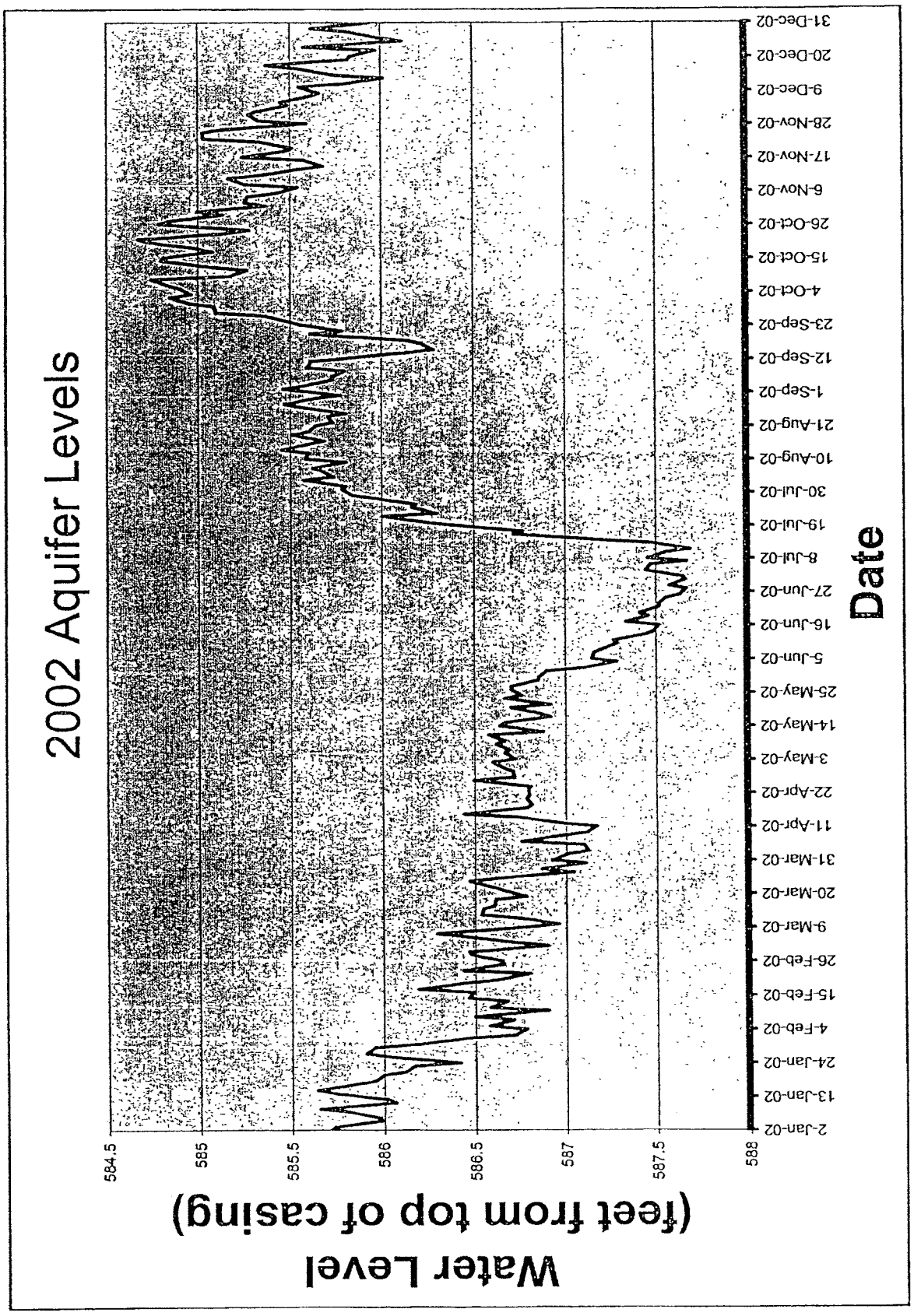
2002 Aquifer Levels
Water Level
(feet from top of casing)
584.5
585
585.5
586
586.5
587
587.5
588
Date
2-Jan-02
13-Jan-02
24-Jan-02
4-Feb-02
15-Feb-02
26-Feb-02
9-Mar-02
20-Mar-02
31-Mar-02
11-Apr-02
22-Apr-02
3-May-02
14-May-02
25-May-02
5-Jun-02
16-Jun-02
27-Jun-02
8-Jul-02
19-Jul-02
30-Jul-02
10-Aug-02
21-Aug-02
1-Sep-02
12-Sep-02
23-Sep-02
4-Oct-02
15-Oct-02
26-Oct-02
6-Nov-02
17-Nov-02
28-Nov-02
9-Dec-02
20-Dec-02
31-Dec-02

MOHAVE-011

MOHAVE ENGINEERING ASSOCIATES, INC.

- CONSULTING CIVIL ENGINEERS & LAND SURVEYORS -

Robert L. Schuetz, P.E.
Vice President / Engineering Mgr.

John A. Proffit, P.E.
President

Thomas R. Christopher, R.L.S.
Vice President / Surveying Manager

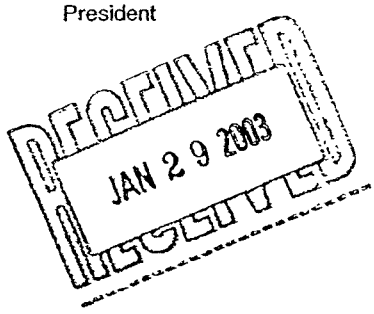

January 23, 2003

Mr. Chet Vasey,
Environmental Safety Manager
Griffith Energy, L.L.C.
P.O. Box 3519
Kingman, Arizona 86402

Dear Mr. Vasey,

I, Craig T. Micek, Land Surveyor in the State of Arizona, Registration No. 31600 hereby state the following:

That during the period from January 15 to January 20, 2003, Mohave Engineering Associates, Inc., under my direct supervision, completed a differential level run from the National Geodetic Survey Bench Mark designated as S 484, located in the Northwest quarter of Section 18, Township 19 North, Range 17 West to the Subsidence Benchmark set by Mohave Engineering Associates, Inc. in November, 1998, located in the Southeast quarter of the Southwest quarter of Section 10, Township 19 North, Range 18 West of the Gila and Salt River Meridian, Mohave County, Arizona.

The results of this differential level circuit indicate that there has been no subsidence or elevation change at the Subsidence Monument from the time the original level circuit was performed on November 20, 1998 and the current level circuit completed on January 20, 2003.

Respectfully,

Craig T. Micek, R.L.S. 31600

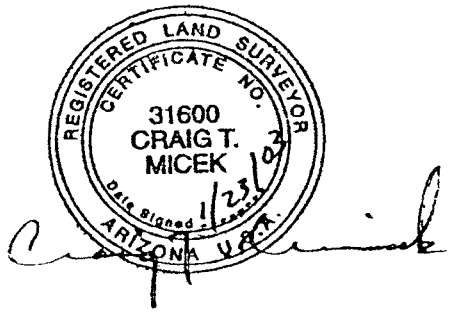

* * * Transmission Result Report(MemoryTX) (Jun. 5. 2003 10:50AM) * * *

1) Griffith Energy
2) Primesouth. Inc.

Date/Time: Jun. 5. 2003 10:47AM

File No.	Mode	Destination	Pg(s)	Result	Page Not Sent
1446	Memory TX	Pat Themig, PPL	P. 4	OK	

Reason for error
E.1) Hang up or line fail
E.2) Busy
E.3) No answer
E.4) No facsimile connection

PRIMESOUTH
GRIFFITH ENERGY
A SCANA COMPANY

TRANSMITTAL SHEET

TO: Pat Themig
FROM:
COMPANY:
DATE:
FAX NUMBER:
TOTAL NO. OF PAGES INCLUDING COVER: pages
PHONE NUMBER:
PHONE: 928-718-0102
RE:
FAX: 928-718-0727

☐ URGENT ☐ FOR REVIEW ☐ PLEASE COMMENT ☐ PLEASE REPLY ☐ PLEASE RECYCLE

NOTES/COMMENTS:

Sent 1/31/03

Chet

3535 W. NAVAJO DRIVE, KINGMAN, AZ 86401
REMIT TO: P.O. BOX 3514, KINGMAN, AZ 86402

* * * Transmission Result Report(MemoryTX) (Jun. 5. 2003 10:53AM) * * *

1) Griffith Energy
2) Primesouth. Inc.

Date/Time: Jun. 5. 2003 10:50AM

File No.	Mode	Destination	Pg(s)	Result	Page Not Sent
1447	Memory TX	16022749135	P. 4	OK	

FAX TO:

PPL

PAT THEMIG

JAY MOYES - ATTORNEY

Jay Moyes

602-274-9135

E.2) Busy
E.4) No facsimile connection

PRIMESOUTH
GRIFFITH ENERGY
A SCANA COMPANY

TRANSMITTAL SHEET

TO: Jay Moyes	FROM:
COMPANY:	DATE:
FAX NUMBER:	TOTAL NO. OF PAGES INCLUDING COVER: pages
SENDER'S REFERENCE NUMBER:	PHONE: 928-718-0102
RE:	FAX: 928-718-0727

☐ URGENT ☐ FOR REVIEW ☐ PLEASE COMMENT ☐ PLEASE REPLY ☐ PLEASE RECYCLE

NOTES/COMMENTS:

Jay,

This was sent in January to the ADWR.

Chet

3515 W NAVAJO DRIVE, KINGMAN, AZ 86401
MAIL TO: P O BOX 2519, KINGMAN AZ 86402

In-Situ Inc. MiniTroll Std P

Report generat 12/31/2002 14:11:46
Report from file C:\Win-Situ\Data\SN03258 2002-01-02 125727 Test 2002.bin
DataMgr Versic 3.68

Serial number: 3258
Firmware Versi 2.08
Unit name: Griffith #3

Test name: Test 2002

Test started on 1/2/2002 12:57:27
Test stopped o 12/31/2002 13:47:36
Test extracted on: N/A

Data gathered using Linear testing
Time betwee Minutes.
Number of da 364

TOTAL DATA : 364

Channel number [1]
Measurement Pressure
Channel nam OnBoard Pressure
Sensor Range 100 PSI.
Specific gravit 1
Mode: TOC
User-defined 0 Feet H2O
Referenced o test start
Pressure hea 196.873 Feet H2O

Date	Time	ET (min)	Chan[1] Feet H2O	Aquifer Level
37258	12:57	0	0	196.873
37259	12:57	1440	0.015	196.858
37261	12:57	4320	0.271	196.602
37262	12:57	5760	0.264	196.609
37264	12:57	8640	0.097	196.776
37265	12:57	10080	-0.061	196.934
37267	12:57	12960	0.346	196.527
37268	12:57	14400	0.31	196.563
37270	12:57	17280	0.013	196.86
37271	12:57	18720	-0.077	196.95
37273	12:57	21600	0.131	196.742
37274	12:57	23040	0.235	196.638
37276	12:57	25920	0.284	196.589

37277	12:57	27360	0.399	196.474
37279	12:57	30240	0.453	196.42
37280	12:57	31680	0.697	196.176
37282	12:57	34560	0.31	196.563
37283	12:57	36000	0.193	196.68
37285	12:57	38880	0.241	196.632
37286	12:57	40320	0.46	196.413
37288	12:57	43200	0.73	196.143
37289	12:57	44640	1.004	195.869
37291	12:57	47520	1.066	195.807
37292	12:57	48960	0.865	196.008
37294	12:57	51840	0.998	195.875
37295	12:57	53280	0.783	196.09
37297	12:57	56160	1.186	195.687
37298	12:57	57600	0.868	196.005
37300	12:57	60480	0.961	195.912
37301	12:57	61920	0.748	196.125
37303	12:57	64800	0.776	196.097
37304	12:57	66240	0.479	196.394
37306	12:57	69120	0.722	196.151
37307	12:57	70560	0.908	195.965
37309	12:57	73440	1.087	195.786
37310	12:57	74880	0.719	196.154
37312	12:57	77760	0.942	195.931
37313	12:57	79200	0.935	195.938
37315	12:57	82080	0.768	196.105
37316	12:57	83520	0.755	196.118
37318	12:57	86400	1.185	195.688
37319	12:57	87840	1.018	195.855
37321	12:57	90720	0.73	196.143
37322	12:57	92160	0.577	196.296
37324	12:57	95040	1.068	195.805
37325	12:57	96480	1.245	195.628
37327	12:57	99360	1.031	195.842
37328	12:57	100800	0.824	196.049
37330	12:57	103680	0.832	196.041
37331	12:57	105120	0.893	195.98
37333	12:57	108000	0.9	195.973
37334	12:57	109440	1.068	195.805
37336	12:57	112320	0.95	195.923
37337	12:57	113760	0.888	195.985
37339	12:57	116640	0.757	196.116
37340	12:57	118080	0.909	195.964
37342	12:57	120960	1.327	195.546
37343	12:57	122400	1.155	195.718
37345	12:57	125280	1.388	195.485
37346	12:57	126720	1.21	195.663
37348	12:57	129600	1.298	195.575
37349	12:57	131040	1.409	195.464
37351	12:57	133920	1.382	195.491
37352	12:57	135360	1.044	195.829
37355	12:57	139680	1.397	195.476

37356	12:57	141120	1.431	195.442
37358	12:57	144000	1.259	195.614
37359	12:57	145440	1.279	195.594
37361	12:57	148320	0.728	196.145
37362	12:57	149760	0.977	195.896
37364	12:57	152640	1.1	195.773
37365	12:57	154080	1.086	195.787
37367	12:57	156960	1.087	195.786
37368	12:57	158400	1.163	195.71
37370	12:57	161280	1.095	195.778
37371	12:57	162720	1.032	195.841
37373	12:57	165600	1.005	195.868
37374	12:57	167040	1.101	195.772
37376	12:57	169920	0.949	195.924
37377	12:57	171360	0.859	196.014
37379	12:57	174240	1.011	195.862
37380	12:57	175680	0.998	195.875
37382	12:57	178560	0.977	195.896
37383	12:57	180000	0.818	196.055
37385	12:57	182880	0.955	195.918
37386	12:57	184320	0.824	196.049
37388	12:57	187200	1.164	195.709
37389	12:57	188640	1.06	195.813
37391	12:57	191520	0.955	195.918
37392	12:57	192960	1.1	195.773
37394	12:57	195840	1.154	195.719
37395	12:57	197280	0.968	195.905
37397	12:57	200160	1.203	195.67
37398	12:57	201600	1.051	195.822
37400	12:57	204480	1.045	195.828
37401	12:57	205920	1.038	195.835
37404	12:57	210240	1.024	195.849
37405	12:57	211680	1.135	195.738
37406	12:57	213120	1.141	195.732
37408	12:57	216000	1.181	195.692
37409	12:57	217440	1.386	195.487
37411	12:57	220320	1.566	195.307
37412	12:57	221760	1.429	195.444
37414	12:57	224640	1.442	195.431
37415	12:57	226080	1.482	195.391
37417	12:57	228960	1.572	195.301
37418	12:57	230400	1.553	195.32
37420	12:57	233280	1.732	195.141
37421	12:57	234720	1.773	195.1
37423	12:57	237600	1.801	195.072
37424	12:57	239040	1.622	195.251
37426	12:57	241920	1.744	195.129
37427	12:57	243360	1.698	195.175
37429	12:57	246240	1.801	195.072
37430	12:57	247680	1.801	195.072
37432	12:57	250560	1.843	195.03
37433	12:57	252000	1.918	194.955

37435	12:57	254880	1.951	194.922
37436	12:57	256320	1.863	195.01
37438	12:57	259200	1.946	194.927
37439	12:57	260640	1.933	194.94
37441	12:57	263520	1.731	195.142
37442	12:57	264960	1.883	194.99
37444	12:57	267840	1.951	194.922
37445	12:57	269280	1.745	195.128
37447	12:57	272160	1.842	195.031
37448	12:57	273600	1.972	194.901
37450	12:57	276480	1.772	195.101
37451	12:57	277920	1.494	195.379
37453	12:57	280800	1.004	195.869
37454	12:57	282240	1.053	195.82
37456	12:57	285120	0.693	196.18
37457	12:57	286560	0.521	196.352
37459	12:57	289440	0.293	196.58
37460	12:57	290880	0.581	196.292
37462	12:57	293760	0.451	196.422
37463	12:57	295200	0.471	196.402
37465	12:57	298080	0.25	196.623
37466	12:57	299520	0.126	196.747
37468	12:57	302400	0.071	196.802
37469	12:57	303840	0.091	196.782
37471	12:57	306720	-0.143	197.016
37472	12:57	308160	0.022	196.851
37474	12:57	311040	-0.04	196.913
37475	12:57	312480	-0.089	196.962
37477	12:57	315360	0.09	196.783
37478	12:57	316800	-0.13	197.003
37480	12:57	319680	-0.111	196.984
37481	12:57	321120	-0.262	197.135
37483	12:57	324000	-0.111	196.984
37484	12:57	325440	-0.028	196.901
37486	12:57	328320	-0.206	197.079
37487	12:57	329760	-0.111	196.984
37489	12:57	332640	-0.076	196.949
37490	12:57	334080	0.021	196.852
37492	12:57	336960	-0.007	196.88
37493	12:57	338400	0.089	196.784
37495	12:57	341280	-0.159	197.032
37496	12:57	342720	-0.248	197.121
37498	12:57	345600	-0.084	196.957
37499	12:57	347040	0.062	196.811
37501	12:57	349920	-0.254	197.127
37502	12:57	351360	-0.144	197.017
37504	12:57	354240	0.021	196.852
37505	12:57	355680	0.014	196.859
37507	12:57	358560	0.082	196.791
37508	12:57	360000	-0.123	196.996
37510	12:57	362880	-0.097	196.97
37511	12:57	364320	0.069	196.804

37513	12:57	367200	0.414	196.459
37514	12:57	368640	0.567	196.306
37516	12:57	371520	0.504	196.369
37517	12:57	372960	0.436	196.437
37519	12:57	375840	-0.103	196.976
37520	12:57	377280	0.069	196.804
37522	12:57	380160	-0.145	197.018
37523	12:57	381600	-0.214	197.087
37525	12:57	384480	-0.353	197.226
37526	12:57	385920	-0.615	197.488
37528	12:57	388800	-0.628	197.501
37529	12:57	390240	-0.759	197.632
37531	12:57	393120	-0.87	197.743
37532	12:57	394560	-0.75	197.623
37534	12:57	397440	-0.813	197.686
37535	12:57	398880	-0.875	197.748
37537	12:57	401760	-0.972	197.845
37538	12:57	403200	-0.545	197.418
37540	12:57	406080	-0.45	197.323
37541	12:57	407520	-0.634	197.507
37543	12:57	410400	-0.917	197.79
37544	12:57	411840	-0.903	197.776
37546	12:57	414720	-0.636	197.509
37547	12:57	416160	-0.718	197.591
37549	12:57	419040	-0.979	197.852
37550	12:57	420480	-1.042	197.915
37552	12:57	423360	-0.566	197.439
37553	12:57	424800	-0.443	197.316
37555	12:57	427680	-0.932	197.805
37556	12:57	429120	-0.876	197.749
37558	12:57	432000	-0.58	197.453
37559	12:57	433440	-0.717	197.59
37561	12:57	436320	-0.353	197.226
37562	12:57	437760	-0.462	197.335
37564	12:57	440640	-0.444	197.317
37565	12:57	442080	-0.304	197.177
37567	12:57	444960	-0.173	197.046
37568	12:57	446400	-0.462	197.335
37570	12:57	449280	-0.551	197.424
37571	12:57	450720	-0.378	197.251
37573	12:57	453600	-0.172	197.045
37574	12:57	455040	-0.034	196.907
37576	12:57	457920	-0.136	197.009
37577	12:57	459360	-0.474	197.347
37579	12:57	462240	-0.247	197.12
37580	12:57	463680	-0.205	197.078
37582	12:57	466560	-0.378	197.251
37583	12:57	468000	-0.683	197.556
37585	12:57	470880	-0.689	197.562
37586	12:57	472320	-0.591	197.464
37588	12:57	475200	-0.123	196.996
37589	12:57	476640	-0.385	197.258

37591	12:57	479520	-0.44	197.313
37592	12:57	480960	-0.398	197.271
37594	12:57	483840	-0.232	197.105
37595	12:57	485280	-0.267	197.14
37597	12:57	488160	-0.104	196.977
37598	12:57	489600	-0.054	196.927
37600	12:57	492480	-0.164	197.037
37601	12:57	493920	0.069	196.804
37603	12:57	496800	0.298	196.575
37604	12:57	498240	0.015	196.858
37606	12:57	501120	-0.178	197.051
37607	12:57	502560	-0.345	197.218
37609	12:57	505440	0.106	196.767
37610	12:57	506880	0.119	196.754
37611	12:57	508320	0.216	196.657
37613	12:57	511200	-0.137	197.01
37614	12:57	512640	0.085	196.788
37615	12:57	514080	0.402	196.471
37617	12:57	516960	0.617	196.256
37618	12:57	518400	0.119	196.754
37620	12:57	521280	0.107	196.766
37621	12:57	522720	0.229	196.644

"Peter Kaleta"
<Peter.Kaleta@co.mohave.az.us>

To: <ckvasey@griffithenergyproject.com>
cc:
Subject: Monthly Water Usage

01/16/2003 03:40 PM

Attached is a spreadsheet with the monthly water usage for Griffith.

Can you send me a copy of the monitoring well data for 2002?

2002-monthly water usage-griffith.xls

Monthly water usage - Griffith Power Plant

Month	Gallons
Jan-02	21,574,000
Feb-02	45,932,000
Mar-02	36,848,000
Apr-02	30,323,000
May-02	22,615,000
Jun-02	71,475,000
Jul-02	78,456,000
Aug-02	75,958,000
Sep-02	56,920,000
Oct-02	26,193,000
Nov-02	27,897,000
Dec-02	28,771,000
	522,962,000

MOHAVE ENGINEERING ASSOCIATES, INC.
Consulting Civil Engineers & Land Surveyors
405 E. Beale Street
Kingman, Arizona 86401
Phone: 928-753-2627 Ext: 220 FAX: 928-753-9118

CONTRACT FOR PROFESSIONAL SERVICES

Date: January 14, 2003

To: Mr. Chet Vasey
Griffith Energy, LLC
P. O. Box 3519
Kingman, Arizona 86402

Telephone: (928) 718-0102

FAX: (928) 718-0727

This **"letter of acceptance and authorization to proceed"** is a contractual agreement between Mohave Engineering Associates, Inc. and you, indicating your acceptance of the terms as provided herein, and authorization for Mohave Engineering Associates, Inc. to proceed with the service (s) as follows:

Scope of Services: Conduct a 3-wire level loop for +/- 6 miles (total run) from reference benchmark to subsidence monument, and prepare a report of field findings.

and you hereby agree to a fee **Not to exceed $ $2460.00**

Additional costs will require client approval and will be charged at Mohave Engineering Associates, Inc. current rate schedule. By accepting this proposal, you agree that you will pay any legal fees required for collection.

Retainer requested and enclosed: **Waived**

Company Policy Terms: Invoices are to be paid within fifteen (15) days of receipt unless other provisions are made.
Estimated Completion Date: **Open**

Please sign this acknowledgment and return it via FAX , mail, or hand delivery to our office. We shall commence the services agreed upon when we received the signed Proposal ,or we and can arrange a convenient time for both parties to meet at our office prior to the survey commencing.

We appreciate your business and please do not hesitate to contact our office if you have questions or need additional information. **Thank you for choosing Mohave Engineering Associates, Inc. for this very important project.**

John A. Burkhardt Mohave Engineering Associates, Inc,
(Authorized signature)

AUTHORIZATION AND NOTICE TO PROCEED

I,_____representing_____**(Please print)** hereby state that I agree to the terms as given above and authorize Mohave Engineering Associates, Inc. to proceed with the Scope of Services as ordered.

_____ Date:_____, 2003
(Authorized signature)

PRIMESOUTH
A SCANA COMPANY

PALMARK
A PRIMESOUTH COMPANY

P.O. Box 3519
Kingman, AZ 86402
(928) 718-0102
Fax (928) 718-0727

February 10, 2003

Arizona Department of Water Resources
Attn: Mr. Greg Wallace, Chief Hydrologist
500 North Third Street
Phoenix, AZ 85004

Subject: Graph Correction

Gentlemen:

Attached to Griffith Energy's Environmental Compatibility Report dated January 31, 2003 is a mislabeled chart. The X-axis shows the year as 2000, when, in reality, it is 2002.

The data gathered started on January 2, 2002 and was retrieved on December 31, 2002 with a measurement taken every day. A corrected graph is attached. Please replace the original with this corrected one.

If you have any questions, please call me at (928) 718-0102 ext. 227.

Sincerely,

Chet Vasey
Environmental/Safety Manager
Griffith Energy Project

bcc: Jim Parker
Brenda Long
Darren Stephens
David S. Miller
Jay Moyes
File: 404-080-56

2002 Aquifer Levels
Water Level
(feet from top of casing)
584.5
585
585.5
586
586.5
587
587.5
588
2-Jan-02
13-Jan-02
24-Jan-02
4-Feb-02
15-Feb-02
26-Feb-02
9-Mar-02
20-Mar-02
31-Mar-02
11-Apr-02
22-Apr-02
3-May-02
14-May-02
25-May-02
5-Jun-02
16-Jun-02
27-Jun-02
8-Jul-02
19-Jul-02
30-Jul-02
10-Aug-02
21-Aug-02
1-Sep-02
12-Sep-02
23-Sep-02
4-Oct-02
15-Oct-02
26-Oct-02
6-Nov-02
17-Nov-02
28-Nov-02
9-Dec-02
20-Dec-02
31-Dec-02
Date

MOHAVE-011

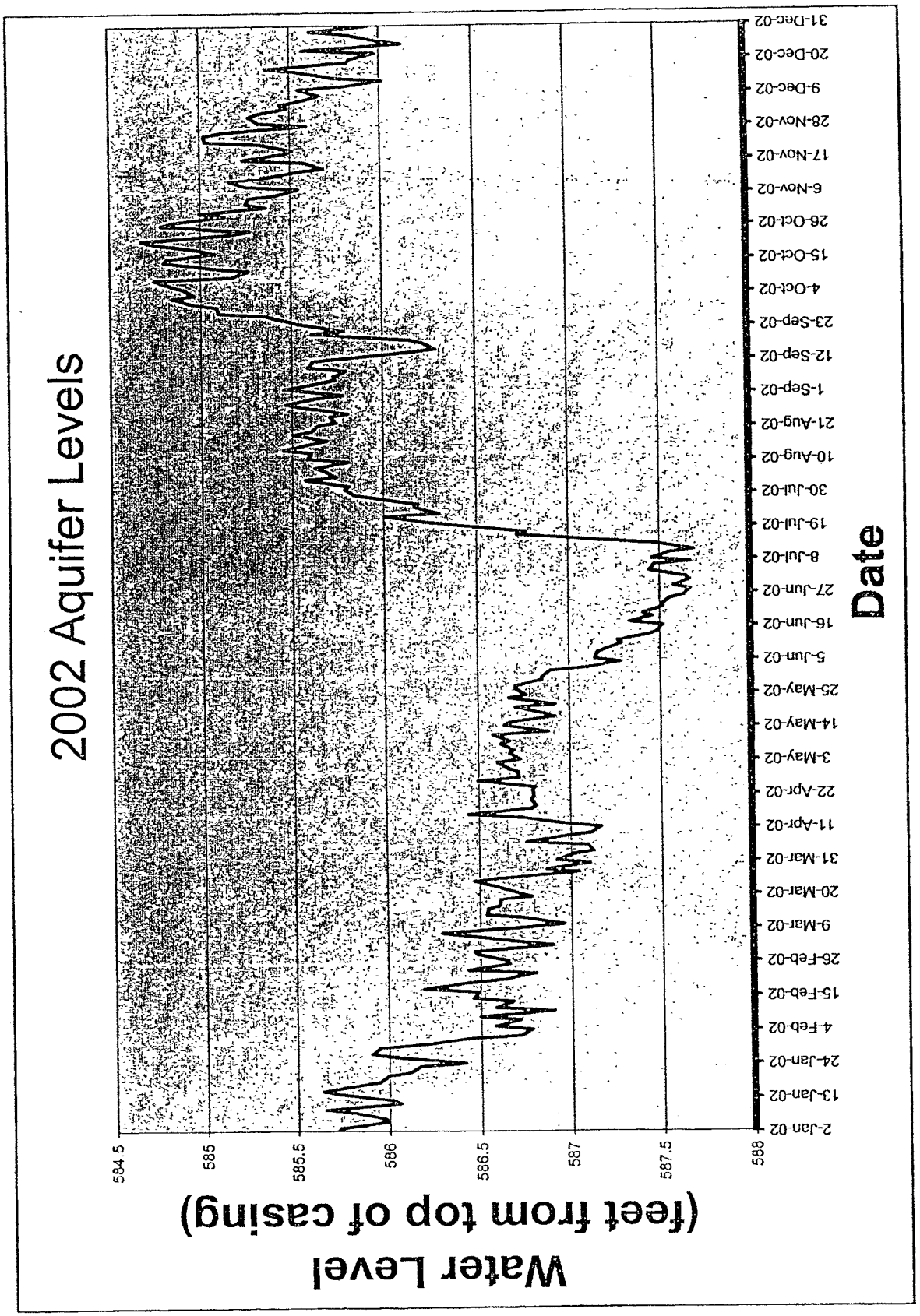
2002 Aquifer Levels
Water Level
(feet from top of casing)
584.5
585
585.5
586
586.5
587
587.5
588
Date
2-Jan-02
13-Jan-02
24-Jan-02
4-Feb-02
15-Feb-02
26-Feb-02
9-Mar-02
20-Mar-02
31-Mar-02
11-Apr-02
22-Apr-02
3-May-02
14-May-02
25-May-02
5-Jun-02
16-Jun-02
27-Jun-02
8-Jul-02
19-Jul-02
30-Jul-02
10-Aug-02
21-Aug-02
1-Sep-02
12-Sep-02
23-Sep-02
4-Oct-02
15-Oct-02
26-Oct-02
6-Nov-02
17-Nov-02
28-Nov-02
9-Dec-02
20-Dec-02
31-Dec-02

MOHAVE-011

The Phoenix Corporate Center
3003 North Central Avenue
Suite 1250
Phoenix, Arizona 85012-2915
www.lawyers.com/lawms/

MOYES STOREY

LAW OFFICES

Jay I. Moyes

Telephone: 602-604-2106
Facsimile: 602-274-9135
Email: jimoyes@lawms.com

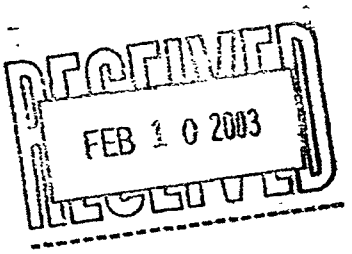

February 6, 2003

Mr. Rex LaMew
Plant Manager
Griffith Energy Project
P.O. Box 3519
Kingman, AZ 86402

Dear Rex:

Thank you for copying me and keeping me in the loop in regards to Griffith's reports and filings on CEC compatibility issues with the ACC. I may be missing something or received the wrong copy, but my copy of the water table graph appears to be a partial year only, and reflects wrong dates (January 1, 2000 to August 28, 2000). Is the date axis just irrelevant? If so, it should be deleted. Is there a need to correct or explain what was sent to ADWR? I would appreciate it if you could give me a call to explain. Thanks!

Sincerely,

Jay I. Moyes

JIM/lkk
cc: Pat Themig
Dana Diller

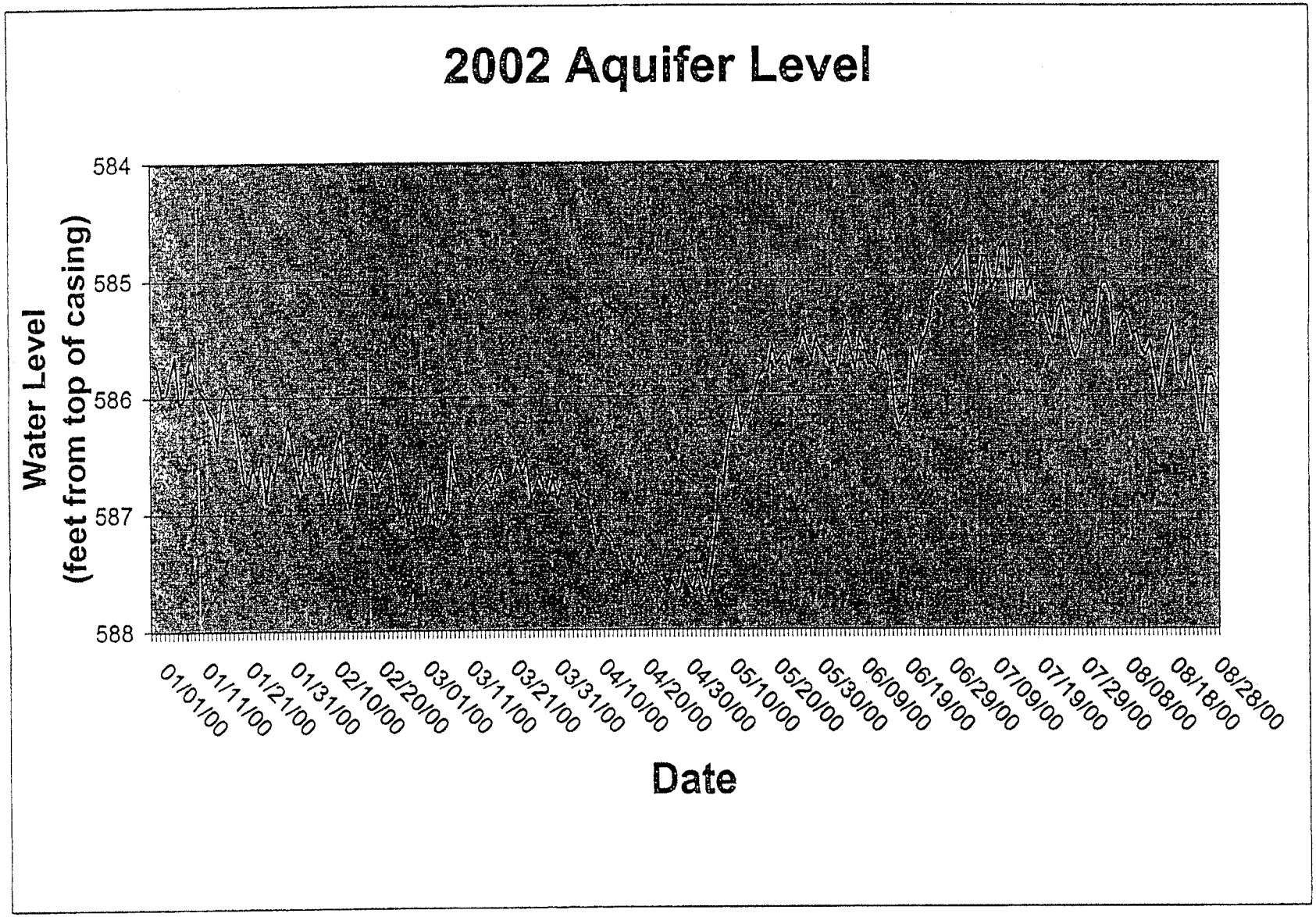
2002 Aquifer Level
Water Level
(feet from top of casing)
584
585
586
587
588
01/01/00
01/11/00
01/21/00
01/31/00
02/10/00
02/20/00
03/01/00
03/11/00
03/21/00
03/31/00
04/10/00
04/20/00
04/30/00
05/10/00
05/20/00
05/30/00
06/09/00
06/19/00
06/29/00
07/09/00
07/19/00
07/29/00
08/08/00
08/18/00
08/28/00
Date

MOHAVE-011

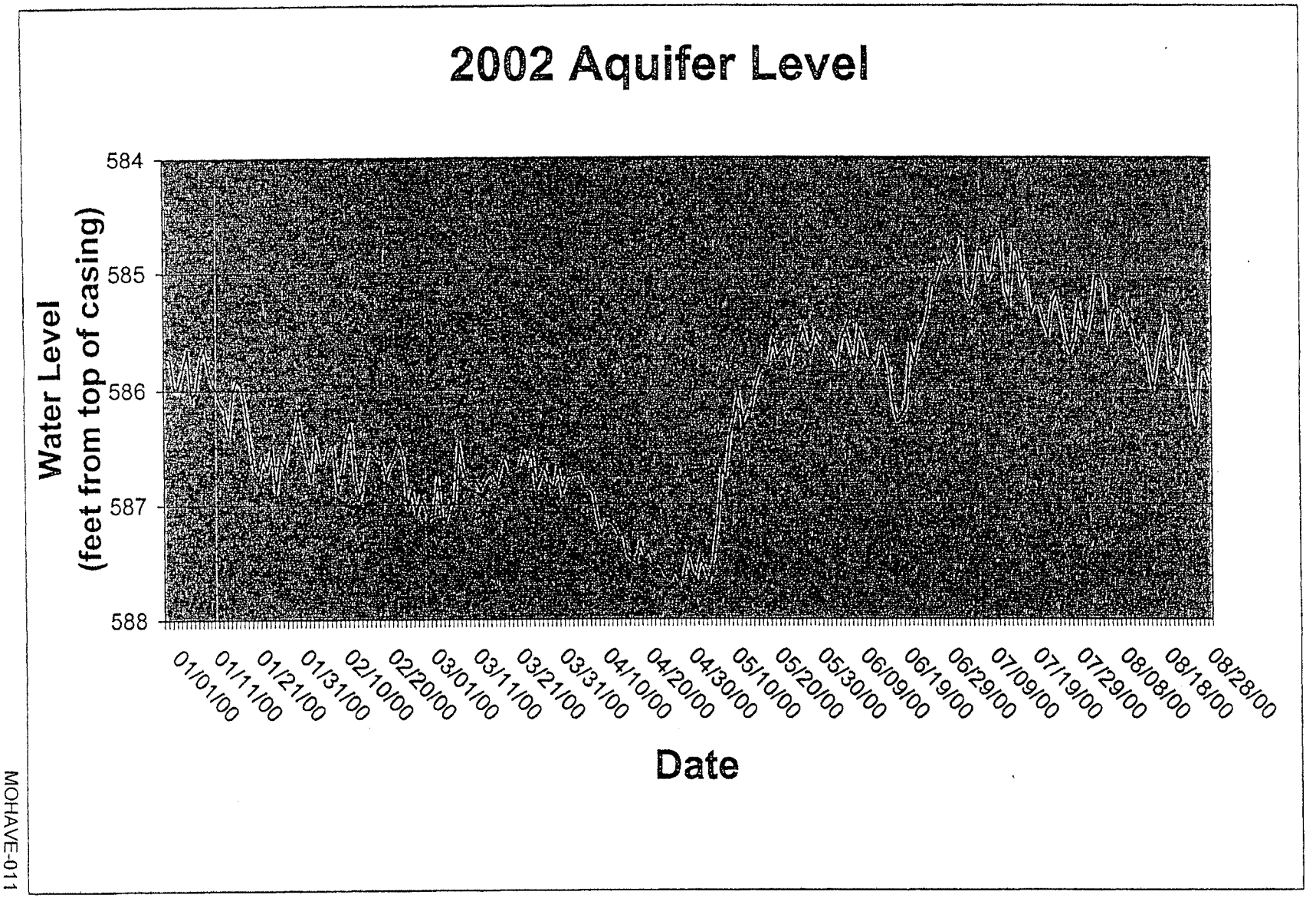
2002 Aquifer Level
Water Level
(feet from top of casing)
584
585
586
587
588
01/01/00
01/11/00
01/21/00
01/31/00
02/10/00
02/20/00
03/01/00
03/11/00
03/21/00
03/31/00
04/10/00
04/20/00
04/30/00
05/10/00
05/20/00
05/30/00
06/09/00
06/19/00
06/29/00
07/09/00
07/19/00
07/29/00
08/08/00
08/18/00
08/28/00
Date

MOHAVE-011