ORIGINAL

0000068341

NORTHERN ARIZONA ENERGY PROJECT SYSTEM IMPACT STUDY

WESTERN

AREA POWER
ADMINISTRATION
DESERT SOUTHWEST REGION
Transmission Planning

Arizona Corporation Commission
DOCKETED
JUL 26 2007
DOCKETED BY

Prepared by
Jeffery L. Ellis, P.E.
(Utility System Efficiencies)

Contributors
Joshua Johnston, P.E.
Leonard York
Nick Saber

RECEIVED
2007 JUL 26 P 3: 43
AZ CORP COMMISSION
DOCKET CONTROL

Version 3.2
July 20, 2007

L-00000FF-07-0134-00133

NORTHERN ARIZONA ENERGY PROJECT
SYSTEM IMPACT STUDY

July 20, 2007
Prepared by Utility System Efficiencies, Inc.

TABLE OF CONTENTS

1 EXECUTIVE SUMMARY 1
1.1 General 1
1.2 Power Flow Analysis 2
1.2.1 Northern Arizona Energy Project Displacing Nevada Generation. 2
1.2.2 Northern Arizona Energy Project Generation Serving Regional Load Growth. 3
1.2.3 Power Flow Mitigation. 4
1.3 Post-Transient Analysis 5
1.4 Transient Stability Analysis 5
1.5 Short-Circuit Duty Analysis 5
1.6 Cost Estimate 6
1.7 Conclusions 6

2 STUDY ASSUMPTIONS 7
2.1 Pre-Project Power Flow Case Modeling 7
2.2 Post-Project Power Flow Case Modeling 8
2.3 Post-Transient Contingencies 12
2.4 Transient Stability Power Flow Cases and Dynamic Data 12
2.4.1 Transient Stability Modeling 12
2.5 Reliability Criteria 12
2.5.1 Power Flow 13
2.5.2 Transient Stability 13

3 STUDY METHODOLOGY 14
3.1 Power Flow 14
3.2 Post-Transient Analysis 15
3.2.1 Thermal & Voltage 15
3.3 Transient Stability 15
3.4 Short-Circuit Duty 16

4 RESULTS & FINDINGS 17
4.1 Power Flow Analysis 17
4.1.1 Northern Arizona Energy Project Displacing Nevada Generation. 17
4.1.2 Northern Arizona Energy Project Generation Serving Regional Load Growth. 18
4.1.3 Power Flow Mitigation. 19
4.2 Post-Transient Analysis 20
4.2.1 Northern Arizona Energy Project Displacing Nevada Generation. 20
4.2.2 Northern Arizona Energy Project Generation Serving Regional Load Growth. 21
4.3 Transient Stability Analysis 21
4.4 Short-Circuit Duty Analysis 22

5 COST AND SCHEDULE ESTIMATE 22

LIST OF APPENDICES

Appendix A - Complete List of Power Flow Results
Appendix B – Power Flow Plots
Appendix C - List of Contingencies
Appendix D – Transient Stability Modeling
Appendix E – Transient Stability Plots
Appendix F – Load Distribution and Generation Shift Factors

1 EXECUTIVE SUMMARY

1.1 General

By request of the Southwest Power Partners, LLC ("SWPP"), Utility System Efficiencies, Inc. ("USE") performed a system impact study ("SIS") for the proposed Northern Arizona Energy Project ("NAEP") with the oversight of the Western Area Power Administration ("Western"). The NAEP is proposing the addition of four simple cycle combustion turbine generator units with a gross plant output of 193.5 MW, plant auxiliary load of 13.5 MW and a net project output of 180 MW. The Project will be located on a site just north of the existing Griffith 230 kV Switchyard owned and operated by Western. The earliest proposed in-service date for commercial operation is June 1, 2008.

The Interconnection Request was deemed a completed application on September 28, 2006 and Western posted the request to the OASIS at 4:53 pm on that same day. In accordance with Section 6.1 of Attachment L to Western's OATT SWPP and Western agreed to forgo the Interconnection Feasibility Study and initiate an Interconnection System Impact Study under Section 7 of Attachment L. SWPP and Western entered into Letter Agreement No. 06-DSR-11505 for System Impact Study (SIS), dated December 4, 2007 (Agreement).

SWPP has specifically applied for Energy Resource Interconnection Service. By definition, this type of Service allows an interconnection customer to deliver the generating station's output using existing firm or non-firm capacity on an "as available" basis.

Nothing in this report constitutes an offer of transmission service or confers upon the Interconnection Customer ("SWPP") any right to receive transmission service. WAPA-DSW and other interconnected utilities may not have the Available Transmission Capacity to support the interconnection described in this report.

SWPP has indicated that utilities that serve load regional to the study area are the primary target for marketing the Project, specifically to UNS Electric Inc. However, marketing the output to entities residing in Phoenix, Southern Nevada, and California are also viable options. Therefore, a variety of scenarios were studied.

This Study simulated the following technical analyses as part of this SIS.
A. Power flow analysis
B. Post-transient power flow analysis
C. Transient stability analysis
D. Short circuit analysis

Performance of the transmission system was measured against the WECC Reliability Criteria and NERC Planning Standards.

Power flow and transient stability results demonstrate that the existing Western facilities cannot support the requested interconnection without the administration of a Remedial Action Scheme ("RAS"). The post-transient power flow analysis and short-circuit analysis did not identify any negative effects to the system. However, operational flow limits will be required to mitigate power flow and transient stability issues during N-1 and N-1-1 conditions. Results identified that the NAEP generation curtailments are not required during N-0 conditions. However, three N-1-1 contingencies were identified that would require all of the NAEP generation to be tripped and several other N-1-1 contingencies will require generation curtailments. Two (2) N-1 contingencies were identified that would require NAEP generation curtailments of approximately 75 MW when the Liberty PST is in-service. NAEP generation curtailments were not identified when the Liberty PST was by-passed.

Subsequent to the SIS and before the NAEP may operate commercially, detailed operational study work will be performed by Western Operations at the expense of SWPP. The detailed operating study will

analyze additional potential system operating conditions and define solutions to mitigate any potential unreliable system conditions. The study will also determine the impact the NAEP has on the Liberty phase shifting transformer's angle margin. If the NAEP causes a three degree or greater angle difference, additional remedial operating actions will be required.

A Facility Study ("FS") Agreement will be sent to SWPP shortly after the release of this SIS. The FS will include the identification of equipment additions and modifications required for the NAEP interconnection facilities including the necessary equipment required for the RAS.

1.2 Power Flow Analysis

The power flow analysis studied two alternatives of displacing the Northern Arizona Energy Project generation: 1) Nevada generation was reduced to accommodate the Northern Arizona Energy Project generation and 2) NAEP Energy Center generation serves the regional load growth. In addition, the Liberty phase-shift transformer ("PST") was modeled in two conditions: 1) in-service with a south-to-north flow of 450 MW and 2) by-passed.

According to Western Operations, the Liberty PST is operated between 8 and 10 times per year for the past ten years. Operation of the Liberty PST is in accordance with the contract between Western and the operator of the WECC-accepted East of River ("EOR") marketing path. The Liberty PST holding 450MW is a critical component in maintaining the EOR path rating.

The Northern Arizona Energy Project increases post-contingency power flow loading to a few elements, which are tabulated in **Tables E-1** and **E-2**. Only the highest loaded "affected elements" are tabulated. In addition, case names in column "**case**" can be referred to by the following:

1. 1-AI refers to a minimum generation dispatch in the WAPA-DSW system. In addition, the Northern Arizona Energy Project generation displaces Nevada Generation.

2. 2-LD refers to a minimum generation dispatch in the WAPA-DSW system. In addition, the Northern Arizona Energy Project generation serves incremental regional load growth.

3. 3-AI-max refers to a maximum generation dispatch in the WAPA-DSW system. In addition, the Northern Arizona Energy Project generation displaces Nevada Generation.

4. 4-LD-max refers to a maximum generation dispatch in the WAPA-DSW system. In addition, the Northern Arizona Energy Project generation serves incremental regional load growth.

Power flow plots for normal and emergency system conditions for each scenario are included in **Appendix B**. A list of contingencies simulated for each scenario are included in **Appendix C**.

1.2.1 Northern Arizona Energy Project Displacing Nevada Generation.

There were NERC/WECC Category "B" contingency affected elements identified when the Liberty PST was in-service at 450 MW. Loss of the North Gila – Imperial Valley 500 kV line affects the Blythe-Niland 161kV line; however it only slightly increases power flow to this element. Furthermore, the Blythe SPS will reduce Buck Blvd generation to mitigate the thermal overload.

Loss of the Peacock-Mead 345 kV line or the Mead 345/230 kV transformer impacts the Davis-McConnico 230 kV line by 21%. The pre-project loading was at its thermal limit, therefore, the NAEP generation further increases flow to this element.

The remaining thermal impacts on the transmission elements were observed under N-1-1 contingencies. The most severe is for loss of the Peacock 345/230 kV transformer, then loss of the Davis-McConnico 230 kV line or vice-versa with maximum NAEP and Griffith generation on-line. Under this outage condition, the power flows to the Round Valley – Peacock 230 kV, Round Valley – Prescott 230 kV and Prescott-Yavapai 230 kV lines significantly increased as a result of the Northern Arizona Energy Project.

In addition, a synchronous condenser modeled at the McConnico 230 kV bus was needed for a solution when the Liberty PST was by-passed. This identifies that all Griffith and NAEP generation can not be on-line when the Peacock 345/230 kV transformer and Davis-McConnico 230 kV line are open. Mitigation for these conditions will be further defined in the Power Flow Mitigation section.

Table E-1. 2008 Heavy Autumn Emergency Percent Loading – Displacing Nevada Generation.

				Liberty PST In-Service at 450MW (s2n)		Liberty PST By-Passed	
Case	Contingency	Affected Element	Normal/ Emergency Rating (Amps)	Pre-Project	Post-Project	Pre-Project	Post-Project
3-Al-max	N.Gila - Imperial Valley 500 kV	Blythe - Niland 161 kV	592/592	106.8	107.9	NA	NA
1-Al	Peacock - Mead 345 kV	Davis - McConnico 230 kV	1130/1243	99.1	120.3	NA	NA
1-Al	Mead 345/230 kV Transformer	Davis - McConnico 230 kV	1130/1243	99.0	120.2	NA	NA
3-Al-max	Hilltop - McConnico 230 kV Griffith - Peacock 230 kV	Davis - McConnico 230 kV	1130/1243	102.7	139.5	102.7	137.4
3-Al-max	Davis - McConnico 230 kV Griffith - Peacock 230 kV	Hilltop - McConnico 230 kV	1130/1243	103.8	141.6	103.0	137.9
3-Al-max	Davis - McConnico 230 kV Griffith - Peacock 230 kV	Hilltop - Peacock 230 kV	1130/1243	83.2	120.6	82.7	117.5
1-Al/3-Al-max	Peacock 345/230 kV Trans Davis - McConnico 230 kV	Prescott - Yavapai 230 kV	670/811	65.4	109.1	70.8	134.6
1-Al/3-Al-max	Peacock 345/230 kV Trans Davis - McConnico 230 kV	Round Valley - Peacock 230 kV	816/897	114.6	170.9	118.8	**196.4***
1-Al/3-Al-max	Peacock 345/230 kV Trans Davis - McConnico 230 kV	Round Valley - Prescott 230 kV	816/897	111.3	167.6	115.5	**192.7***

NA – indicates there were no thermal overloads triggered with the Liberty PST by-passed.
*Required a synchronous condenser for a solution. Results in a voltage collapse in the local system.

In addition, voltage violations were identified for all N-1-1 contingencies; however, they will be mitigated with the power flow mitigation.

1.2.2 Northern Arizona Energy Project Generation Serving Regional Load Growth.

There was only one NERC/WECC Category "B" contingency affected element triggered when the Liberty PST was in-service at 450 MW. Loss of the Peacock-WhiteHill 345 kV line increases power flow to the Davis-McConnico 230 kV line by 16.7%. The pre-project loading was at its thermal limit, therefore, the NAEP generation further increases power flow on this element. Also, loss of the WhiteHill-Mead 345 kV line or Mead 345/230 kV transformer increases power flow to the Davis-McConnico 230 kV line by 9.3%. The White Hills bus is proposed to support UNS load in 2009. This bus intercepts the Peacock-Mead 345 kV line.

The remainder of the thermal overloads on the transmission system were observed under N-1-1 contingency conditions. Similar to the study case where NAEP generation was displaced by Nevada generation, the most severe is for loss of the Peacock 345/230 kV transformer, then loss of the Davis-McConnico 230 kV line or vice-versa with maximum NAEP and Griffith generation on-line. Power flow to the Round Valley – Peacock 230 kV, Round Valley – Prescott 230 kV and Prescott-Yavapai 230 kV lines significantly increased as a result of the Northern Arizona Energy Project. This identifies that all Griffith and NAEP generation can not be on-line when the Peacock 345/230 kV transformer and Davis-McConnico 230 kV line are open. Mitigation for these conditions will be further defined in the Power Flow Mitigation section.

Table E-2. 2008 Heavy Autumn Emergency Percent Loading – Serving Regional Load Growth.

				Liberty PST In-Service at 450MW (s2n)		Liberty PST By-Passed	
Case	Contingency	Affected Element	Normal/ Emergency Rating (Amps)	Pre-Project	Post-Project	Pre-Project	Post-Project
2-LD	Peacock - WhiteHill 345 kV	Davis - McConnico 230 kV	1130/1243	99.3	116.0	NA	NA
2-LD	WhiteHill - Mead 345 kV	Davis - McConnico 230 kV	1130/1243	99.1	108.4	NA	NA
2-LD	Mead 345/230 kV Transformer	Davis - McConnico 230 kV	1130/1243	99.0	108.3	NA	NA
4-LD-max	Hilltop - McConnico 230 kV Griffith - Peacock 230 kV	Davis - McConnico 230 kV	1130/1243	102.7	139.4	137.4	34.6
4-LD-max	Davis - McConnico 230 kV Griffith - Peacock 230 kV	Hilltop - McConnico 230 kV	1130/1243	103.8	141.1	137.7	34.7
2-LD/4-LD-max	Peacock - White Hill 345 kV Griffith - McConnico 230 kV	Hilltop - Peacock 230 kV	1130/1243	100.3	119.2	82.7	110.3
2-LD	Peacock 345/230 kV Tran Davis - McConnico 230 kV	Prescott - Yavapai 230 kV	670/811	65.4	114.3	66.1	115.6
2-LD	Peacock 345/230 kV Tran Davis - McConnico 230 kV	Round Valley - Peacock 230 kV	816/897	114.6	173.8	114.6	174.6
2-LD	Peacock 345/230 kV Tran Davis - McConnico 230 kV	Round Valley - Prescott 230 kV	816/897	111.3	170.1	111.3	170.9

NA – indicates there were no thermal overloads triggered with the Liberty PST by-passed.

In addition, voltage violations were identified for all N-1-1 contingencies; however, they will be mitigated with the power flow mitigation.

1.2.3 Power Flow Mitigation.

Flow limits will be developed to estimate post-contingency element flows for the identified thermally overloaded elements caused by the Project. Flow limits will be used in determining the amount of generation reduction to mitigate post-contingency thermal overloads for loss of critical element(s). A list of LODF and GSF factors are tabulated in **Appendix F**, which have been calculated for all contingencies that were impacted by the Northern Arizona Energy Project. The LODF and GSF factors are key components of the flow limits.

Note, a linear analysis was used to calculate the load distribution and generation shift factors. Therefore, they do not take into account losses. This results in the load distribution factors to be smaller than a regular power flow that accounts for losses, which, may result in a lower generation reduction amount. Therefore, an additional margin should be applied to the load distribution factor.

The developed power flow mitigation were tested with both post-transient and transient stability results to ensure system reliability is maintained.

The Northern Arizona Energy Project will be subject to generation curtailments based on flow limits during N-1 conditions for the following two contingencies:

1. Mead 345/230 kV transformer,
2. Peacock – Mead 345 kV line.

In addition, the Project is subject to generation curtailments for any of the identified N-1-1 conditions. The mitigation method involving generation curtailments or generation run-back will be designed in accordance with the WECC/NERC design, operations and reliability criteria.

1.3 Post-Transient Analysis

Two post-project contingencies yielded voltage deviations greater than the WECC Performance standard of 5%. However, the post-transient voltage deviations will be corrected with use of the flow-limit mitigation. Results between the Project displacing Nevada generation and the Project serving regional load were similar in voltage deviations. In addition, operation of the Liberty PST did not significantly skew the post-transient voltage results. Tabulations of all post-transient voltage deviation results are included in **Appendix A**.

Loss of the Peacock 345/230 kV transformer and Davis-McConnico 230 kV line results in no numerical solution. This violation was identified in the power flow section of the report. Therefore, reducing the NAEP generation based on the flow limit, results in a post-transient voltage deviation of 6%, which is less than the 10% requirement.

With use of flow limits, the post-transient voltage deviations from the NAEP does not have a negative impact.

1.4 Transient Stability Analysis

Transient stability analysis was completed for all post-project conditions, which include the Project generation being displaced by Nevada generation and the Project generation serving regional load. In addition, the Liberty PST was modeled in-service at 450 MW (south-to-north) and by-passed.

All N-1 contingencies in the WAPA-DSW system showed sufficient damping with no WECC Performance Criteria violations. However, there were WECC Performance criteria violations for two N-1-1 contingencies.

Power flow results identified that with the Griffith-Peacock 230 kV line out-of-service and loss of the Davis-McConnico 230 kV line, the Hilltop-McConnico 230 kV and Hilltop-Peacock 230 kV lines will thermally overload with maximum NAEP and Griffith generation on-line. Transient stability results also identified that maximum NAEP and Griffith generation will result in the WECC Performance criteria standards to be violated. The Hilltop 230 kV bus would experience a 31.1% voltage dip and the Griffith 230 kV bus would experience a frequency dip of 59.5 Hz.

Power flow results identified that a flow limit will be required to ensure that the affected elements are not thermally overloaded under these conditions. Transient stability analysis was performed with the readjusted post-project case (i.e., flow limit requirements, which reduced the aggregate NAEP and Griffith generation). Results identified that there were no WECC Performance criteria violations with the flow limit requirements in place.

Power flow results also identified that with the Peacock 345/230 kV Transformer out-of-service and loss of the Davis-McConnico 230 kV line, the Round Valley-Peacock 230 kV, Round Valley-Prescott 230 kV and Prescott-Yavapai 230 kV lines will thermally overload with maximum NAEP and Griffith generation on-line. Transient stability results identified that the system had sustained oscillations that do not diminish with Griffith and NAEP generation greater than 520 MW, which denotes system instability. Therefore, the sum of Griffith and NAEP generation with the Peacock 345/230 kV transformer OR the Davis-McConnico 230 kV line open must remain at or below 520MW to prevent system instability.

Transient stability plots for select post-project simulations are included in **Appendix E**.

1.5 Short-Circuit Duty Analysis

The post-project base case was converted to PSS/E version 30.3.1, in order to complete the short-circuit analysis. In addition, only 3-phase fault analysis was completed since the negative sequence data was not available. Single-phase-to-ground short-circuit duties will be provided in the completed Facilities Study.

Results identified that the NAEP did not trigger any circuit breaker rating violations.

1.6 Cost Estimate

Western and SWPP attended a scoping meeting on October 23, 2006 where SWPP introduced two proposed, 230kV alternative interconnections to be considered (See Section 2.2) for the SIS. Subsequent to the scoping meeting, SWPP confirmed that alternative #1 would be the assumed electrical configuration to study. It shall be noted that both alternative configurations #1 and #2 are electrically identical with respect to what was studied in this SIS. Therefore, if SWPP should change the configuration to alternative #2 in the future, an additional SIS will not have to be performed but additional operational studies will be required to validate the reliability of the interconnection at the Project's in-service date. In addition, the Northern Arizona Energy Project will not be re-queued. However, additional costs will be incurred by SWPP should the configuration change during or after the Facility Study.

A general and preliminary cost estimate for the two proposed interconnection alternatives are shown below and the corresponding schedules are provided in **Section 5** of this report. The cost estimates include substation design, electrical equipment procurement, construction specification development, contracting, and construction.

Alternative #1 3-breaker (breaker and a half) interconnection: $4,200,000
Alternative #2 6-breaker (breaker and a half) interconnection: $7,200,000

A more detailed cost estimate will be prepared as part of the Facilities Study should SWPP decide to continue with the interconnection process. The Facility Study will also provide further details of the environmental process and construction schedule.

1.7 Conclusions

The analysis identified that there is not a significant difference between the Northern Arizona Energy Project generation being displaced by generation outside the WAPA-DSW system and the Northern Arizona Energy Project serving regional load growth – results of the two scenarios were very similar. However, operation of the Liberty phase-shift transformer did result in affecting the power flow results.

The only transient stability issue attributed to the Northern Arizona Energy Project was identified with the Griffith-Peacock 230 kV line out-of-service and loss of the Davis-McConnico 230 kV line. Results identified that with maximum NAEP and Griffith generation, the Hilltop 230 kV bus would experience a 31.1% voltage dip and the Griffith 230 kV bus would experience a frequency dip of 59.5 Hz. The stability issue could be a result of inaccurate dynamic data that was identified when the Peacock 345/230 kV transformer is out of service. Nevertheless, the stability issue can be mitigated by utilizing the developed flow limit.

Transient stability results identified that the system had sustained oscillations that do not diminish with Griffith and NAEP generation greater than 520 MW, which denotes system instability. Therefore, the sum of Griffith and NAEP generation with the Peacock 345/230 kV transformer OR the Davis-Mc Connico 230 kV line open must remain at or below 520MW to prevent system instability.

With inclusion of the Project, the post-transient power flow analysis and short-circuit analysis did not identify any negative effects to the system. However, operational flow limits will be required to mitigate power flow and transient stability issues during N-1 and N-1-1 conditions. Results identified that the NAEP generation curtailments are not required during N-0 conditions. However, three N-1-1 contingencies were identified that would require all of the NAEP generation to be tripped and several other N-1-1 contingencies will require generation curtailments. Two (2) N-1 contingencies were identified that would require NAEP generation curtailments of approximately 75 MW, which depends on system conditions.

Operating Studies will be performed should SWPP choose to proceed with the interconnection process. The Operating Studies will analyze additional system conditions and define overloaded elements and/or voltage violations as a result of the NAEP. In addition, extreme WECC Category D contingencies will be studied. Additional flow limits and corresponding generation reductions may be identified during the operational studies as well. Also, operating nomograms will be developed for NAEP generation including Griffith generators with South Point and Blythe Energy generators. Any mitigation actions would be included in Special Operating Procedures.

2 STUDY ASSUMPTIONS

This section of the report provides details pertaining to the power flow case development and an overview of major study assumptions.

2.1 Pre-Project Power Flow Case Modeling

The 2008 heavy autumn system conditions were modeled for this study. Sensitivities were simulated to determine the most stressed conditions with the WAPA (zone 191) generation at minimum and maximum levels. The following modifications were implemented to create the 2008 pre-project power flow cases:

Case 1: 2008 Heavy Autumn: Minimum Western Generation.

1. Study base case "SWPP_GRIFFITH.sav" was obtained from WAPA – Desert Southwest Region, which is an approved WATS base case.
2. WAPA modeled a plausible generation dispatch during minimum generation conditions.
3. Revised EOR9300 project upgraded ratings.
4. EOR flow was modeled at 9,300 MW in all base cases.

Case 2: 2008 Heavy Autumn: Maximum Western Generation.

1. Case 1 generation was increased. The Blythe, Davis, Griffith, Parker and South Point generation was modeled at their maximum output.

Case 3: 2008 Heavy Autumn: Minimum Western Generation – Liberty PST By-Passed.

1. By-passed the Liberty phase-shift transformer in Case 1 – Liberty flow decreased to 222 MW.
2. EOR flow readjusted to 9,300 MW.
    a. Area interchange between Area 14 (+85 MW) and 18 (-85 MW).
    b. Silver Hawk generation was reduced by 90 MW.
    c. Increased Coronado Unit 1 generation by 50 MW. Area 14 slack bus made up remaining generation.

Case 4: 2008 Heavy Autumn: Maximum Western Generation – Liberty PST By-Passed.

1. By-passed the Liberty phase-shift transformer in Case 2 – Liberty flow decreased to 187 MW.
2. EOR flow readjusted to 9,300 MW.
    a. Area interchange between Area 14 (+105 MW) and 18 (-105 MW).
    b. Silver Hawk generation was reduced by 110 MW.
    c. Increased Coronado Unit 1 generation by 50 MW. Area 14 slack bus made up remaining generation.

Table 1. Pre-Project Power Flow Case Attributes

	Liberty PST In-Service		Liberty PST By-Passed	
	Case 1 Min Gen	Case 2 Max Gen	Case 3 Min Gen	Case 4 Max Gen
Path 46 - West of the River	8,401	9,200	8,400	9,200
Path 49 - East of the River	9,301	9,300	9,300	9,300
Area 14 - AZ				
Load	12,253	12,259	12,253	12,259
Losses	453	458	452	452
Gen	23,695	24,581	23,795	24,684
Interchange	10,989	11,863	11,089	11,972
Zone 191 - WAPA-DSW				
Load	1151	1157	1151	1157
Losses	148	162	142	153
Gen	2,185	3,445	2,185	3,445
Interchange	553	1,794	560	1,803

2.2 Post-Project Power Flow Case Modeling

The Northern Arizona Energy Project was modeled with the following parameters, which were provided with the Interconnection Application:

1. Four (4) CT generators were modeled at the existing Griffith 230 kV Substation with a Pmax of 60.5 MW, Qmax of 37.5 MVAr, Qmin of -22.2 MVAr.
2. Four (4) 70 MVA 230/13.8 kV step-up transformers with an R, X and B of 0.00, 0.100 and 0.0, respectively were modeled.

Since the breaker configuration of the Project has not been fully determined, both configurations are illustrated in **Figures 1 and 2.** The SIS modeled configuration 1; however, it is not believed that the SIS results will be affected by either configuration.

Figure 1. Northern Arizona Energy Project, Configuration 1 single line diagram.

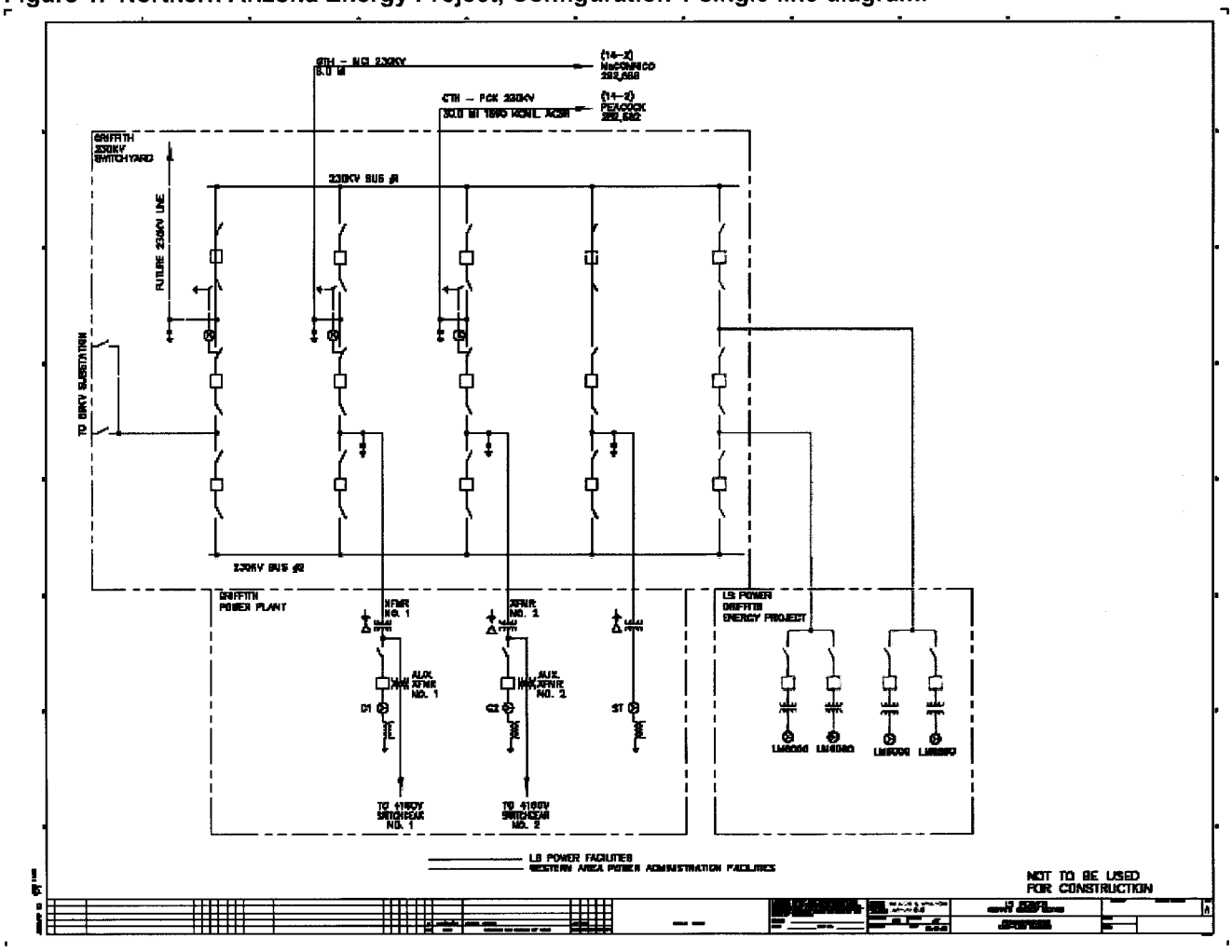

Figure 2. Northern Arizona Energy Project, Configuration 2 single line diagram.

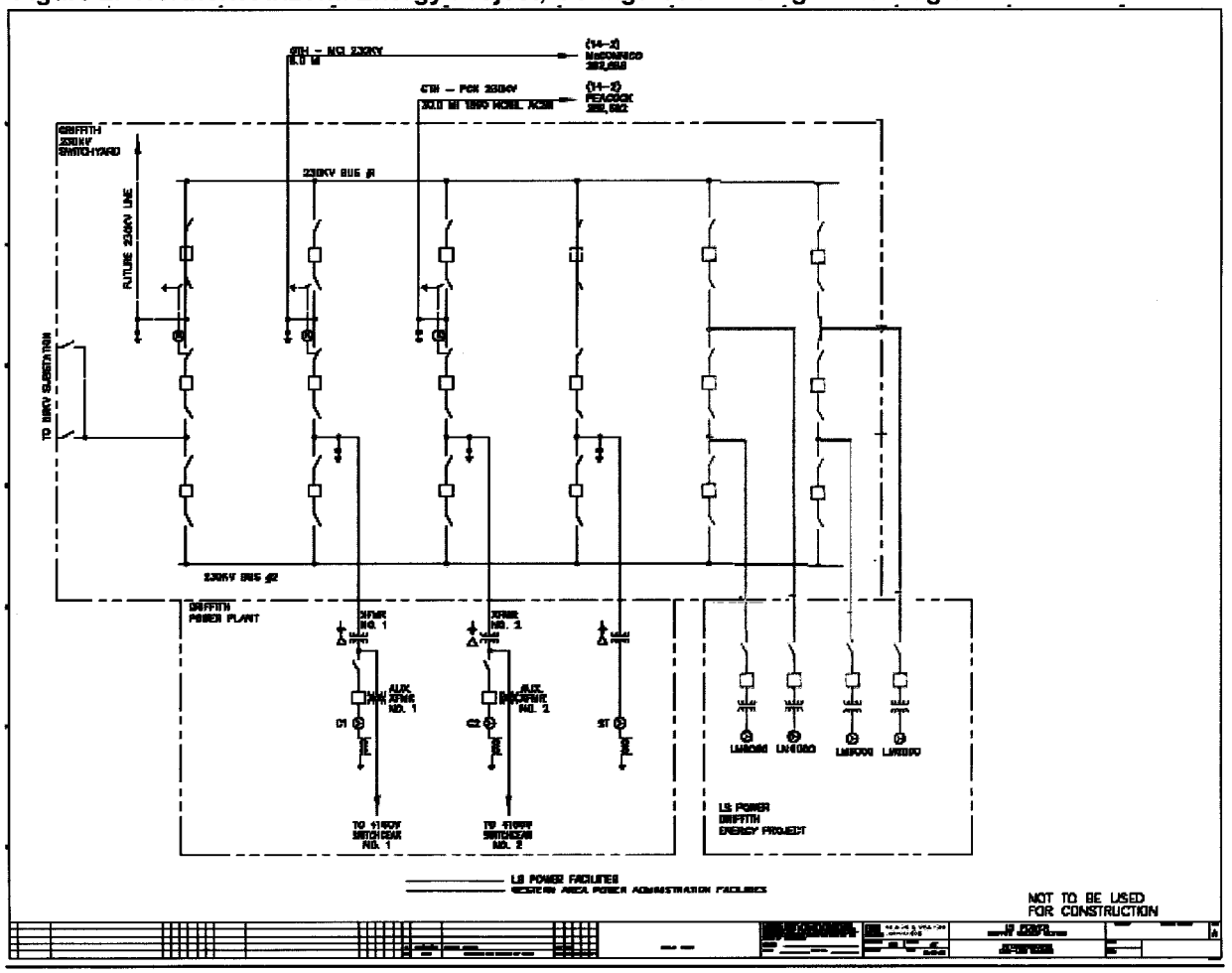

The following 2008 post-project power flow case descriptions identify generation dispatch modifications required for the post-project case scenarios:

Cases 5 & 7: 2008 Heavy Autumn: Min WAPA Gen – Dispatch to Area 18 (Nevada).

- Liberty phase-shift transformer models a south to north flow of 450 MW.
- With insertion of the Project, Merchant generation in Nevada was reduced to accommodate the Northern Arizona Energy Project.

Cases 6 & 8: 2008 Heavy Autumn: Min WAPA Gen – Dispatch to regional Load.

- Liberty phase-shift transformer models a south to north flow of 450 MW.
- Based on load projections, the UNS load will grow by 197 MW from the 2008 load levels. Therefore, load at White Hill, North Havasu and Hilltop were increased to reflect the 2014 season load level. Modeling both the load growth and Northern Arizona Energy Project off-set each other to balance load and resources.

Case 9 & 11: 2008 Heavy Autumn: Min WAPA Gen – Dispatch to Area 18 (Nevada).

- Liberty phase-shift transformer is by-passed.
- With insertion of the Project, Merchant generation in Nevada was reduced to accommodate the Northern Arizona Energy Project.

Case 10 & 12: 2008 Heavy Autumn: Min WAPA Gen – Dispatch to regional Load.

- Liberty phase-shift transformer models a south to north flow of 450 MW.
- Based on load projections, the UNS load will grow by 197 MW from the 2008 load levels. Therefore, load at White Hill, North Havasu and Hilltop were increased to reflect the 2014 season load level. Modeling both the load growth and Northern Arizona Energy Project off-set each other to balance load and resources.

A summary of post-project power flow case attributes are listed in **Table 2**.

Table 2. Post-Project Power Flow Case Attributes

	Liberty PST In-Service				Liberty PST By-Passed			
	Case 5 Min-Al	**Case 6 Min-LD**	**Case 7 Max-Al**	**Case 8 Max-LD**	**Case 9 Min-Al**	**Case 10 Min-LD**	**Case 11 Max-Al**	**Case 12 Max-LD**
Path 46 - West of the River	8,400	8,400	9,200	9,200	8,401	8,400	9,200	9,200
Path 49 - East of the River	9,300	9,300	9,300	9,300	9,300	9,300	9,301	9,300
Area 14 - AZ								
Load	12,267	12,354	12,273	12,360	12,267	12,464	12,273	12,470
Losses	462	461	469	467	460	458	460	457
Gen	23,845	23,873	24,734	24,758	23,954	23,986	24,851	24,874
Interchange	11,117	11,058	11,992	11,931	11,227	11,064	12,118	11,946
Zone 191 - WAPA-DSW								
Load	1,164	1,361	1,170	1,367	1,164	1,361	1,170	1,367
Losses	157	156	172	170	148	147	160	157
Gen	2,379	2,379	3,639	3,639	2,379	2,379	3,639	3,639
Interchange	724	638	1,964	1,879	733	537	1,976	1,781

2.3 Post-Transient Contingencies

The following contingencies were simulated for the post-transient analysis:

1. Loss of NAEP Units 1 and 2.
2. Loss of Griffith Unit 1.
3. Loss of Davis Unit 1.
4. Loss of South Point Unit 1.
5. Loss of Parker Unit 1.
6. Loss of Hoover Units 3 and 4.
7. Griffith-Peacock 230 kV single line contingency.
8. Griffith-McConnico 230 kV single line contingency.
9. Davis-McConnico 230 kV single line contingency.
10. Peacock-Hilltop 230 kV single line contingency.
11. Peacock-Round Valley-Prescott 230 kV single line contingency.
12. Davis-Mead 230 kV single line contingency.
13. Davis-McCullough 230 kV single line contingency.
14. Davis-Topock 230 kV single line contingency.
15. Parker-Black Mesa 230 kV single line contingency.
16. Parker-Liberty 230 kV single line contingency.
17. Palo Verde - Devers 500 kV single line contingency.
18. Palo Verde – Westwing No.1 and 2 500 kV single line contingencies.
19. North Gila – Imperial Valley 500 kV single line contingency.
20. Hassayampa - N.Gila 500 kV single line contingency.
21. Mead-Peacock 345 kV single line contingency.
22. Liberty-Peacock 345 kV single line contingency.
23. Mead - Perkins 500 kV single line contingency.
24. Lugo - Mohave 500 kV single line contingency.
25. Crystal - McCullough 500 kV single line contingency.
26. Mead-Harry Allen 500 kV single line contingency.
27. ElDorado - Lugo 500 kV single line contingency.
28. El Dorado - Moenkopi 500 kV single line contingency.
29. Navajo - Crystal 500 kV single line contingency.
30. McCullough-Victorville 500 kV double line contingency.

2.4 Transient Stability Power Flow Cases and Dynamic Data

Transient stability simulations were performed using the 2008 heavy autumn power flow cases.

2.4.1 Transient Stability Modeling

Since actual load composition data is not available, induction motors were represented with the motorw model and default data as recommended by WECC. Induction motors were assumed to make up 20% of the WECC system load. The EPCL creatmot5.p program was used to determine the motor representation in each dynamic data file.

The transient stability model for the Northern Arizona Energy Project was developed based on data received from SWPP. Details of the Project transient stability model are included in **Appendix D**.

2.5 Reliability Criteria

A system reliability evaluation consists primarily of determining if thermal overloads exist, that voltages are within criteria (not too high or low), and that the system is stable (the system should not oscillate excessively and generators should remain synchronized with one another). Additional criteria may include assurance that there is sufficient reactive power available. Evaluation of these criteria must be conducted for credible 'emergency' conditions that the system might sustain, such as loss of a single or

double circuit line, a transformer, or a combination of these facilities. The following reliability criteria were employed for this study:

2.5.1 Power Flow

Normal Conditions

1. Under normal conditions, bus voltages must be maintained between 0.95 per unit and 1.05 per unit.
2. All line and transformer loadings must be less than 98 percent of their continuous thermal ratings.

Emergency Conditions

1. Under contingency conditions, bus voltages must be maintained between 0.90 per unit and 1.10 per unit. In addition, voltage deviations at any bus for n-1 contingencies must be no more than 5% and voltage deviations for n-2 contingencies must be no more than 10%.
2. For a single contingency, no transmission element will be loaded above its emergency rating.
3. Established loading limits for other utilities will be monitored.
4. Bus voltage deviations from the base case voltage shall not exceed established planning limits.

2.5.2 Transient Stability

Performance of the transmission system is measured against the following planning criteria: the Western Electricity Coordinating Council ("WECC") Reliability Criteria, and the North American Electric Reliability Council ("NERC") Planning Standards.

Table 3 and **Figure 3** are excerpts from the WECC Reliability Criteria. The reliability and performance criteria were applied to the entire WECC transmission system.

Table 3. WECC Disturbance-Performance Table Of Allowable Effects On Other Systems

NERC and WECC Categories	Outage Frequency Associated with the Performance Category (outage/year)	Transient Voltage Dip Standard	Minimum Transient Frequency Standard	Post Transient Voltage Deviation Standard (See Note 2)
A	Not Applicable	Nothing in addition to NERC		
B	≥ 0.33	Not to exceed 25% at load buses or 30% at non-load buses. Not to exceed 20% for more than 20 cycles at load buses.	Not below 59.6Hz for 6 cycles or more at a load bus.	Not to exceed 5% at any bus.
C	0.033 – 0.33	Not to exceed 30% at any bus. Not to exceed 20% for more than 40 cycles at load buses.	Not below 59.0Hz for 6 cycles or more at a load bus.	Not to exceed 10% at any bus.
D	< 0.033	Nothing in addition to NERC		

Figure 3. NERC/WECC Voltage Performance Parameters

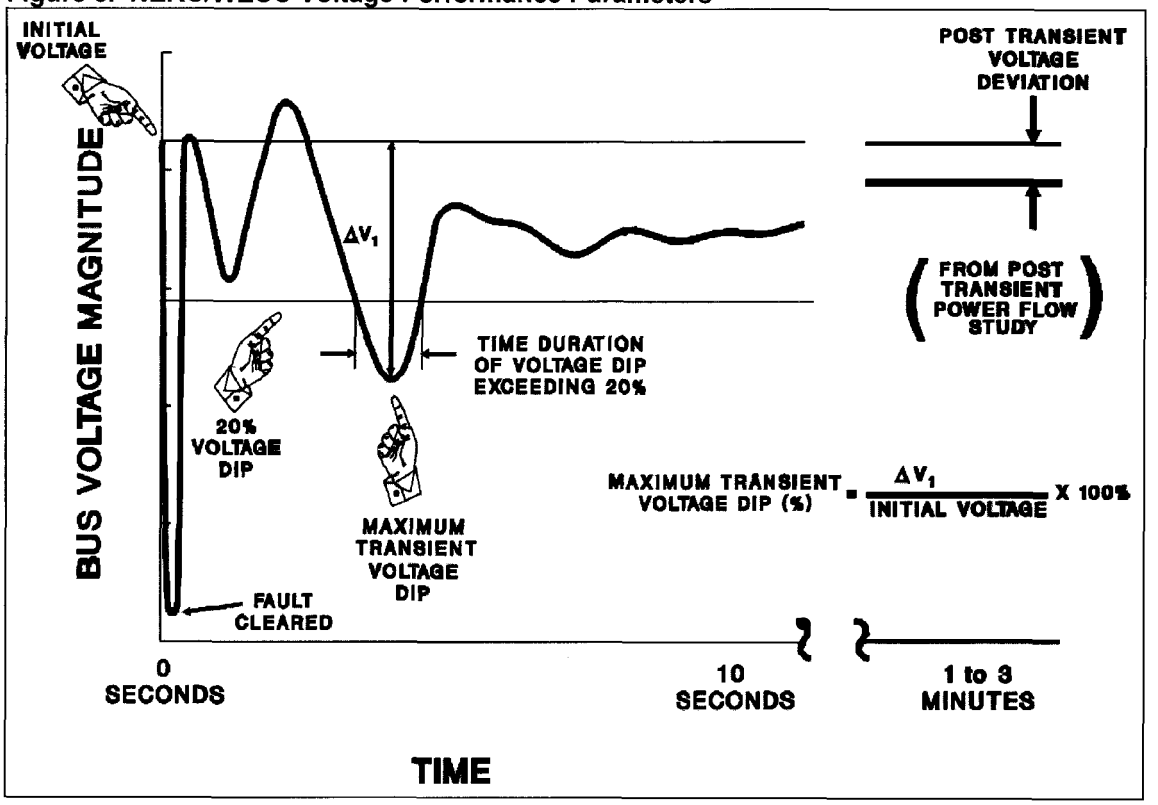

3 STUDY METHODOLOGY

This section of the report provides a summary of methods employed for determining the power flow and transient stability results.

3.1 Power Flow

Power flow analysis considers a snapshot in time where TCUL, SVDs and phase-shifters have had time to adjust. In addition, a swing bus balances the system during each contingency scenario.

Traditional power flow analysis was used to evaluate thermal (and voltage) performance of the system under N-1 (single contingency) conditions. Reported thermal overloads were limited to the condition where a modeled transmission component is loaded over 98% of its appropriate emergency MVA rating (as entered in the power flow database), and the incremental increase in component loading, between pre-project and post-project, exceeds 2%.

Transmission voltage violations for normal N-0 (no contingency) conditions were limited to the conditions where per unit voltages are less than 0.95 or greater than 1.05. Emergency (N-1, single contingency) voltage violations were reported when per unit voltages are less than 0.90 or greater than 1.10.
In addition, voltage deviations between the pre- and post-contingency conditions were noted whenever deviations are greater than 5% <u>and</u> when voltage deviation increases by 1% or more between the pre- and post-project power flow cases.

All power flow analysis was conducted with version 16.0 of General Electric's PSLF/PSDS/SCSC software.

3.2 Post-Transient Analysis

Post-transient analysis considers the period of time after the power and voltage transient oscillations have damped out, but before system operators have had time to readjust intertie schedules. The time frame is approximately 1.5 to 3 minutes subsequent a disturbance. Post-transient analysis techniques will be employed to evaluate the thermal (and voltage) performance of the system for contingencies that rely on remedial action schemes ("RAS") - such as load or generator dropping.

All post-transient evaluations were conducted using version 16.0 of General Electric's PSLF/PSDS/SCSC software. A modified version of the WECC-distributed governor power flow EPCL tool will be used to model operations specific to post-transient analysis.

In order to run a post-transient simulation, unit blocking is achieved by testing the generator baseload flag as opposed to referencing the WECC-supplied block.dat file.

The following remote controlling generators and reactive devices will be set to float:

- Maple Valley-SVC 19.6-kV
- Keeler-SVC 19.6-kV
- Emery Hunter Unit 1 24.0-kV
- Emery Hunter Unit 2 24.0-kV
- Emery Hunter Unit 3 22.0-kV
- Huntington Unit 1 22.0-kV
- Huntington Unit 2 22.0-kV

The following switchable shunt devices were set to float:

- Gonder 230.0-kV
- Austin 230.0-kV

3.2.1 Thermal & Voltage

Reported thermal overloads will be limited to the condition where a modeled transmission component was loaded over 100% of its appropriate normal or emergency rating (as entered in the power flow database).

The voltage study criteria adheres to the Western Electricity Coordinating Council ("WECC") Reliability Criteria for Transmission System Planning.

The applicable WECC reliability planning criteria is listed below.

- Changes in bus voltages from pre- to post-contingency must be less than 5% and 10% for single and double contingencies, respectively.
- All equipment loadings must be below their normal ratings under normal conditions.
- All equipment loadings must be below their emergency ratings for single contingencies.
- All thermal overloads identified in post-transient analysis (new or existing) are under contingency conditions only.

3.3 Transient Stability

Transient stability analysis is a time-based simulation that assesses performance of the power system during (and shortly following) a contingency. Transient stability studies were performed to ensure system stability following a critical fault on the system. Prior to finalization of the power flow and dynamics data set, a flat-run and bump test was run to ensure true power system behavior is not masked by any remote dynamic modeling anomalies.

USE performed a transient stability analysis based on WECC Disturbance-Performance Criteria for selected system contingencies. Initial transient stability contingencies were performed out to 10 seconds. If system performance was not assessed with confidence, simulation times up to 20 seconds were

needed to evaluate system damping. All 345 kV and 500 kV contingencies modeled a 4 cycle clearing time and contingencies with a lower voltage had a 5 cycle clearing time modeled.

All transient stability simulations were conducted using version 16.0 of General Electric's PSLF/PSDS/SCSC software. A modified version of the WECC-distributed alldyns.p EPCL program, which is employed in bulk system regional 500 kV analysis was used to model operations specific to transient stability analysis.

The Worst Condition Analysis (WCA) tool, available in the PSDS software package, tracks and records the transient stability behavior of all output channels contained within the binary output file of a transient stability simulation. The monitoring of channel output was set to being two cycles after fault clearing to ensure that all stability behavior would be captured. System damping was assessed visually with the aid of stability plots.

Parameters Monitored to Evaluate System Stability Performance

Rotor Angle

Rotor angle plots provide a measure for determining how the proposed generation unit would swing with respect to other generation units in the area. This information is used to determine if a machine would remain in synchronism or go out-of-step following a disturbance.

Bus Voltage

Bus voltage plots, in conjunction with the relative rotor angle plots, provide a means of detecting out-of-step conditions. The bus voltage plots are useful in assessing the magnitude and duration of post disturbance voltage dips and peak-to-peak voltage oscillations. Bus voltage plots also give an indication of system damping and the level to which voltages are expected to recover in steady state conditions.

Bus Frequency

Bus frequency plots provide information on magnitude and duration of post fault frequency swings with the Project in service. These plots indicate the extent of possible over-frequency or under-frequency, which can occur because of an imbalance between generation and load within an area.

Other Parameters

- Generator Terminal Power
- Generator Terminal Voltage
- Generator Rotor Speed
- Generator Field Voltage
- Voltage Spread
- Frequency Spread

3.4 Short-Circuit Duty

Short-circuit duty analysis applies a 3-phase fault at the specified bus and then interrupting currents are measured at each breaker location.

Short-circuit duty evaluations were conducted using version 30.3.1 of Siemens/PTI software. A GE power flow base case was converted to PSS/E for this analysis.

Circuit breakers exposed to fault currents in excess of 100 percent of their interrupting capabilities will be replaced or upgraded, whichever is appropriate.

4 RESULTS & FINDINGS

This section of the report provides results obtained in utilizing the above assumptions and methodology. It illustrates all findings associated with the power flow, post-transient, transient stability and short-circuit analysis.

4.1 Power Flow Analysis

The power flow analysis studied two alternatives of displacing the Northern Arizona Energy Project generation: 1) Nevada generation was reduced to accommodate the Northern Arizona Energy Project generation and 2) NAEP generation serves the regional load growth. In addition, the Liberty phase-shift transformer ("PST") was modeled in two conditions: 1) in-service with a south-to-north flow of 450 MW and 2) by-passed.

The Northern Arizona Energy Project increases post-contingency power flow loading to a few elements, which are tabulated in **Tables 4** and **5**. Only the highest loaded "affected elements" are tabulated. In addition, case names in column "**case**" can be referred to by the following:

1. 1-AI refers to a minimum generation dispatch in the WAPA-DSW system. In addition, the Northern Arizona Energy Project generation is displaced by Nevada Generation.

2. 2-LD refers to a minimum generation dispatch in the WAPA-DSW system. In addition, the Northern Arizona Energy Project generation is displaced by regional load growth.

3. 3-AI-max refers to a maximum generation dispatch in the WAPA-DSW system. In addition, the Northern Arizona Energy Project generation is displaced by Nevada Generation.

4. 4-LD-max refers to a maximum generation dispatch in the WAPA-DSW system. In addition, the Northern Arizona Energy Project generation is displaced by regional load growth.

Power flow plots for normal and emergency system conditions for each scenario are included in **Appendix B**. A list of contingencies simulated for each scenario are included in **Appendix C**.

4.1.1 Northern Arizona Energy Project Displacing Nevada Generation.

There were NERC/WECC Category "B" contingency affected elements identified when the Liberty PST was in-service at 450 MW. Loss of the North Gila – Imperial Valley 500 kV line affects the Blythe-Niland 161kV line; however it only slightly increases power flow to this element. Furthermore, the Blythe SPS will reduce Buck Blvd generation to mitigate the thermal overload.

Loss of the Peacock-Mead 345 kV line or the Mead 345/230 kV transformer increases flow to the Davis-McConnico 230 kV line by 21%. The pre-project loading was at its thermal limit, therefore, the NAEP generation further increases flow to this element.

The remaining thermal affected elements are a result of N-1-1 contingencies. The most severe is for loss of the Peacock 345/230 kV transformer, then loss of the Davis-McConnico 230 kV line or vice-versa with maximum NAEP and Griffith generation on-line. Power flow to the Round Valley – Peacock 230 kV, Round Valley – Prescott 230 kV and Prescott-Yavapai 230 kV lines significantly increased as a result of the Northern Arizona Energy Project. In addition, a synchronous condenser modeled at the McConnico 230 kV bus was needed for a solution when the Liberty PST was by-passed. This identifies that all Griffith and NAEP generation can not be on-line when the Peacock 345/230 kV transformer and Davis-McConnico 230 kV line are open. Mitigation for these conditions will be further defined in the Power Flow Mitigation section.

Table 4. 2008 Heavy Autumn Emergency Percent Loading – Displacing Nevada Generation.

				Liberty PST In-Service at 450MW (s2n)		Liberty PST By-Passed	
Case	Contingency	Affected Element	Normal/ Emergency Rating (Amps)	Pre-Project	Post-Project	Pre-Project	Post-Project
3-Al-max	N.Gila - Imperial Valley 500 kV	Blythe - Niland 161 kV	592/592	106.8	107.9	NA	NA
1-Al	Peacock - Mead 345 kV	Davis - McConnico 230 kV	1130/1243	99.1	120.3	NA	NA
1-Al	Mead 345/230 kV Transformer	Davis - McConnico 230 kV	1130/1243	99.0	120.2	NA	NA
3-Al-max	Hilltop - McConnico 230 kV Griffith - Peacock 230 kV	Davis - McConnico 230 kV	1130/1243	102.7	139.5	102.7	137.4
3-Al-max	Davis - McConnico 230 kV Griffith - Peacock 230 kV	Hilltop - McConnico 230 kV	1130/1243	103.8	141.6	103.0	137.9
3-Al-max	Davis - McConnico 230 kV Griffith - Peacock 230 kV	Hilltop - Peacock 230 kV	1130/1243	83.2	120.6	82.7	117.5
1-Al/3-Al-max	Peacock 345/230 kV Trans Davis - McConnico 230 kV	Prescott - Yavapai 230 kV	670/811	65.4	109.1	70.8	134.6
1-Al/3-Al-max	Peacock 345/230 kV Trans Davis - McConnico 230 kV	Round Valley - Peacock 230 kV	816/897	114.6	170.9	118.8	196.4*
1-Al/3-Al-max	Peacock 345/230 kV Trans Davis - McConnico 230 kV	Round Valley - Prescott 230 kV	816/897	111.3	167.6	115.5	192.7*

NA – indicates there were no thermal overloads triggered with the Liberty PST by-passed.
*Required a synchronous condenser for a solution. Results in a voltage collapse in the local system.

In addition, voltage violations were identified for all N-1-1 contingencies; however, they will be mitigated with the power flow mitigation.

4.1.2 Northern Arizona Energy Project Generation Serving Regional Load Growth.

There was only one NERC/WECC Category "B" contingency affected element triggered when the Liberty PST was in-service at 450 MW. Loss of the Peacock-WhiteHill 345 kV line impacts the Davis-McConnico 230 kV line by 16.7%. The pre-project loading was at its thermal limit, therefore, the NAEP generation further increases flow to this element. Also, loss of the WhiteHill-Mead 345 kV line or Mead 345/230 kV transformer increases power flow to the Davis-McConnico 230 kV line by 9.3%. The White Hills bus is proposed to support UNS load in 2009. This bus intercepts the Peacock-Mead 345 kV line.

The remaining thermal affected elements are a result of N-1-1 contingencies. Similar to the NAEP being displaced by Nevada generation, the most severe is for loss of the Peacock 345/230 kV transformer, then loss of the Davis-McConnico 230 kV line or vice-versa with maximum NAEP and Griffith generation on-line. Power flow to the Round Valley – Peacock 230 kV, Round Valley – Prescott 230 kV and Prescott-Yavapai 230 kV lines significantly increased as a result of the NAEP. This identifies that all Griffith and NAEP generation can not be on-line when the Peacock 345/230 kV transformer and Davis-McConnico 230 kV line are open. Mitigation for these conditions will be further defined in the Power Flow Mitigation section.

Table 5. 2008 Heavy Autumn Emergency Percent Loading – Serving Regional Load Growth.

				Liberty PST In-Service at 450MW (s2n)		Liberty PST By-Passed	
Case	Contingency	Affected Element	Normal/ Emergency Rating (Amps)	Pre-Project	Post-Project	Pre-Project	Post-Project
2-LD	Peacock - WhiteHill 345 kV	Davis - McConnico 230 kV	1130/1243	99.3	116.0	NA	NA
2-LD	WhiteHill - Mead 345 kV	Davis - McConnico 230 kV	1130/1243	99.1	108.4	NA	NA
2-LD	Mead 345/230 kV Transformer	Davis - McConnico 230 kV	1130/1243	99.0	108.3	NA	NA
4-LD-max	Hilltop - McConnico 230 kV Griffith - Peacock 230 kV	Davis - McConnico 230 kV	1130/1243	102.7	139.4	137.4	34.6
4-LD-max	Davis - McConnico 230 kV Griffith - Peacock 230 kV	Hilltop - McConnico 230 kV	1130/1243	103.8	141.1	137.7	34.7
2-LD/4-LD-max	Peacock - White Hill 345 kV Griffith - McConnico 230 kV	Hilltop - Peacock 230 kV	1130/1243	100.3	119.2	82.7	110.3
2-LD	Peacock 345/230 kV Tran Davis - McConnico 230 kV	Prescott - Yavapai 230 kV	670/811	65.4	114.3	66.1	115.6
2-LD	Peacock 345/230 kV Tran Davis - McConnico 230 kV	Round Valley - Peacock 230 kV	816/897	114.6	173.8	114.6	174.6
2-LD	Peacock 345/230 kV Tran Davis - McConnico 230 kV	Round Valley - Prescott 230 kV	816/897	111.3	170.1	111.3	170.9

NA – indicates there were no thermal overloads triggered with the Liberty PST by-passed.

In addition, voltage violations were identified for all N-1-1 contingencies; however, they will be mitigated with the power flow mitigation.

4.1.3 Power Flow Mitigation.

Flow limits were developed to estimate post-contingency element flows for the identified thermally overloaded elements caused by the Project. Flow limits will be used to determine the amount of generation reduction in order to mitigate post-contingency thermal overloads for loss of critical element(s). They will not be operated in a preventative manner, which would curtail Northern Arizona Energy Project generation prior to the critical contingency.

Each flow limit has two calculated components from the system: 1) load distribution factor and 2) generation shift factors. The load distribution factor ("LODF") is determined based on the impedance of the system. So, when an element is out-of-service, the LODF will be different. The LODF determines an approximate percent line flow that will be increased on the line of interest. For example, the Peacock-Mead 345 kV line has a pre-contingency line flow of 859 amps in the minimum WAPA-DSW generation case with Project generation being displaced by Nevada generation. For loss of the Peacock-Mead 345 kV line, 52.8% of its pre-contingency line flow moves to the Davis-McConnico 230 kV line. Therefore, the flow limit is calculated by the following:

Flow Limit = LODF*(Peacock-Mead 345 kV line flow) + Davis-McConnico 230 kV line flow
= 0.528*(859 amps) + 1,047 (Amps)
= 1,501 (Amps)

The Davis-McConnico 230 kV line has a continuous rating of 1,130 amps; hence, mitigative measures must be completed to reduce flow during the loss of the Peacock – Mead 345 kV line. Since the Project increased flow to these elements, the Project generation can be reduced. A generation shift factor can be developed to determine generation curtailment requirements.

The generation shift factor ("GSF") is a ratio that calculates an approximate reduction/increase to an element prior to the contingency. The GSF will assist in determining the amount of generation reduction that is required to reduce the flow limit to its continuous rating. Since the flow limit value is in amps, a

conversion ("assuming a balanced three-phase circuit") to real power ("MW") is required for determining generation curtailments.

For example, a GSF of 0.5057 was calculated after the Peacock-Mead 345 kV contingency. The Northern Arizona Energy Project generation curtailment based on the above contingency overload can be calculated by the following:

Generation Curtailments = (Calculated flow limit – Continuous rating) * Conversion * GSF
= (1,501 – 1,130) * ($\sqrt{3}$ * 230kV/1000) * 0.5057
= 75 MW

Therefore, for this particular example a 75 MW reduction of NAEP generation will mitigate post-contingency power flow overloads for loss of the Peacock – Mead 345 kV line.

Since the location of generation displacement outside the WAPA-DSW system is unknown, GSF's were calculated based on generation displacement at four locations: 1) Alameta, 2) Gila, 3) Silver Hawk and 4) Navajo. The highest GSF was selected to yield the most conservative results, which results in the largest generation reduction requirement; however, the GSF's were relatively close to one another.

Note, a linear analysis was used to calculate the load distribution and generation shift factors. Therefore, they do not take into account losses. This results in the load distribution factors to be smaller than a regular power flow that accounts for losses, which, may result in a lower generation reduction amount. Therefore, an additional margin should be applied to the load distribution factor.

A list of LODF and GSF factors calculated for all contingencies that were impacted by the Northern Arizona Energy Project are tabulated in **Appendix F**.

The developed power flow mitigation were tested with both post-transient and transient stability results to ensure system reliability is maintained.

The Northern Arizona Energy Project will be subject to generation curtailments based on flow limits during N-1 conditions for the following two contingencies:

1. Mead 345/230 kV transformer,
2. Peacock – Mead 345 kV line.

In addition, the Project is subject to generation curtailments for any of the identified N-1-1 conditions.

4.2 Post-Transient Analysis

Two post-project contingencies yielded voltage deviations greater than the WECC Performance standard of 5% for N-1 contingencies. However, the post-transient voltage deviations were corrected by reducing NAEP generation during the post-contingency case as prescribed by the flow limit.

Only the largest voltage deviation is recorded in the following tables. Tabulations of all post-transient voltage deviation results are included in **Appendix A**.

With use of flow limits, the post-transient voltage deviations from the Northern Arizona Energy Project does not have a negative impact.

4.2.1 Northern Arizona Energy Project Displacing Nevada Generation.

Loss of the Peacock 345/230 kV transformer and Davis-McConnico 230 kV line results in no numerical solution. This violation was identified in the power flow section of the report. All Griffith and NAEP generation can not be on-line when the Peacock 345/230 kV transformer and Davis-McConnico 230 kV line are open. Therefore, reducing the NAEP generation to zero and reducing the Griffith generation by 62 MW as prescribed by the flow limit, results in a post-transient voltage deviation of 6%, which is less than the 10% requirement.

Table 6. 2008 Heavy Autumn Post-Transient Voltage Deviations – Displacing Nevada Generation.

			Voltage Deviation		
Case	Contingency	Affected Bus	Pre-Project	Liberty PST In-Service Post-Project	Liberty PST By-Passed Post-Project
1-AI	Hassayampa-N.Gila 500 kV	KOFA 161.0	5.6	5.8	5.7
3-AI-max	Hassayampa-N.Gila 500 kV	KOFA 161.0	8.2	8.4	8.4
1-AI	Peacock 345/230 kV Tran Davis-McConnico 230 kV	ROUNDVLY 230.0	8.0	Diverged	Diverged
3-AI-max	Peacock 345/230 kV Tran Davis-McConnico 230 kV	ROUNDVLY 230.0	8.6	Diverged	Diverged

4.2.2 Northern Arizona Energy Project Generation Serving Regional Load Growth.

Loss of the Peacock 345/230 kV transformer and Davis-McConnico 230 kV line results in no numerical solution for the maximum generation case; however, the minimum generation case yielded a solution. It can be seen that the post-transient voltage deviation increased significantly as a result of the severely thermally overloaded transmission lines. All Griffith and NAEP generation can not be on-line when the Peacock 345/230 kV transformer and Davis-McConnico 230 kV line are open. Therefore, reducing the NAEP generation to zero and reducing the Griffith generation by 62 MW as prescribed by the flow limit, results in a post-transient voltage deviation that was observed to be 5.8%, which is less than the 10% requirement.

Table 7. 2008 Heavy Autumn Post-Transient Voltage Deviations – Serving Regional Load Growth.

			Voltage Deviation		
Case	Contingency	Affected Bus	Pre-Project	Liberty PST In-Service Post-Project	Liberty PST By-Passed Post-Project
2-LD	Hassayampa-N.Gila 500 kV	KOFA 161	5.6	5.7	NA
2-LD	Peacock 345/230 kV Tran Davis-McConnico 230 kV	ROUNDVLY 230.0	8.0	18.1	18.1
4-LD-max	Peacock 345/230 kV Tran Davis-McConnico 230 kV	ROUNDVLY 230.0	8.6	14.4	Diverged

4.3 Transient Stability Analysis

Transient stability analysis was completed for all post-project conditions, which include the Project generation being displaced by Nevada generation and the Project generation serving regional load. In addition, the Liberty PST was modeled in-service at 450 MW (south-to-north) and by-passed.

All 345 kV and 500 kV contingencies modeled a 4 cycle clearing time and contingencies with a lower voltage had a 5 cycle clearing time modeled. All line faults were simulated as three-phase faults, with zero fault impedance. Loss of any element was assumed to occur when the fault is cleared, indicating a circuit breaker operation.

All N-1 contingencies in the WAPA-DSW system showed sufficient damping with no WECC Performance Criteria violations. However, there were WECC Performance criteria violations for two N-1-1 contingencies.

Power flow results identified that with the Griffith-Peacock 230 kV line out-of-service and loss of the Davis-McConnico 230 kV line, the Hilltop-McConnico 230 kV and Hilltop-Peacock 230 kV lines will thermally overload with maximum NAEP and Griffith generation on-line. Transient stability results also identified that maximum NAEP and Griffith generation will result in the WECC Performance criteria standards to be violated. The Hilltop 230 kV bus would experience a 31.1% voltage dip and the Griffith 230 kV bus would experience a frequency dip of 59.5 Hz.

Power flow results identified that a flow limit will be required to ensure that the affected elements are not thermally overloaded under these conditions. Transient stability analysis was performed with the readjusted post-project case (i.e., flow limit requirements, which reduced the aggregate NAEP and Griffith generation). Results identified that there were no WECC Performance criteria violations with the flow limit requirements in place.

Power flow results also identified that with the Peacock 345/230 kV Transformer out-of-service and loss of the Davis-McConnico 230 kV line, the Round Valley-Peacock 230 kV, Round Valley-Prescott 230 kV and Prescott-Yavapai 230 kV lines will thermally overload with maximum NAEP and Griffith generation on-line. Transient stability results identified that the system had sustained oscillations that do not diminish with Griffith and NAEP generation greater than 520 MW, which denotes system instability. Therefore, the sum of Griffith and NAEP generation with the Peacock 345/230 kV transformer OR the Davis-Mc Connico 230 kV line open must remain at or below 520MW to prevent system instability.

Transient stability plots for select post-project simulations are included in **Appendix E**.

4.4 Short-Circuit Duty Analysis

The post-project base case was converted to PSS/E version 30.3.1, in order to complete the short-circuit analysis. In addition, only 3-phase fault analysis was completed since the negative sequence data was not available.

Table 8. Summary of Short-Circuit Duties, 3-Phase-to-Ground.

			Pre-Project		Post-Project		
Fault Applied Substation	**Substation TO**	**Interrupting Rating (kA)**	**X/R**	**Fault Current (kA)**	**X/R**	**Fault Current (kA)**	**Delta (kA)**
McConnico 230 kV	Davis 230 kV	40	8.5	4.01	9.2	4.03	0.0
McConnico 230 kV	Hilltop 230 kV	40	8.5	2.48	9.2	2.56	0.1
McConnico 230 kV	Griffith 230 kV	40	8.5	5.95	9.2	7.09	1.1
McConnico 230 kV Total Fault Duty				12.44		13.68	1.2
Peacock 230 kV	Round Valley 230 kV	40	9.7	1.41	10.3	1.42	0.0
Peacock 230 kV	Hilltop 230 kV	40	9.7	2.65	10.3	2.90	0.3
Peacock 230 kV	Griffith 230 kV	40	9.7	3.15	10.3	3.55	0.4
Peacock 230 kV	Peacock 345 kV	40	9.7	4.67	10.3	4.64	0.0
Peacock 230 kV Total Fault Duty				11.88		12.51	0.6
Griffith 230 kV	Griffith 16 kV	40	10.0	1.92	10.4	1.92	0.0
Griffith 230 kV	Griffith 16 kV	40	10.0	1.92	10.4	1.92	0.0
Griffith 230 kV	Griffith 16 kV	40	10.0	2.07	10.4	2.07	0.0
Griffith 230 kV	McConnico 230 kV	40	10.0	4.61	10.4	4.62	0.0
Griffith 230 kV	Peacock 230 kV	40	10.0	2.68	10.4	2.67	0.0
Griffith 230 kV	NAEP_1	-	-	-	11.5	1.26	-
Griffith 230 kV	NAEP_2	-	-	-	11.5	0.82	-
Griffith Total Fault Duty				13.21		15.28	2.1

Results identified that the Northern Arizona Energy Project did not trigger any circuit breaker violations.

5 COST AND SCHEDULE ESTIMATE

Western and SWPP attended a scoping meeting on October 23, 2006 where SWPP introduced two prop osed, 230kV alternative interconnections to be considered (See Section 2.2) for the SIS. Subsequent to the scoping meeting, SWPP confirmed that alternative #1 would be the assumed electrical configuration to study. It shall be noted that both alternative configurations #1 and #2 are electrically identical with respect to what was studied in this SIS. Therefore, if SWPP should change the configuration to

alternative #2 in the future, no additional load flow analysis, transient stability analysis, post transient stability analysis, or short circuit analysis will have to be performed. In addition, the Northern Arizona Energy Project will not be re-queued. However, additional costs will be incurred by SWPP should the configuration change during or after the Facility Study.

A general and preliminary cost estimate for the two proposed interconnection alternatives are shown below and the corresponding schedules are provided in **Figures 4** and **5**. The cost estimates include substation design, electrical equipment procurement, construction specification development, contracting, and construction.

Alternative #1 3-breaker (breaker and a half) interconnection: $4,200,000
Alternative #2 6-breaker (breaker and a half) interconnection: $7,200,000

A more detailed cost estimate will be prepared as part of the Facilities Study should SWPP decide to continue with the interconnection process. The Facility Study will also provide further details of the environmental process and construction schedule.

Figure 4. NAEP Project Interconnection - SIS Schedule - 3 Breaker Option.

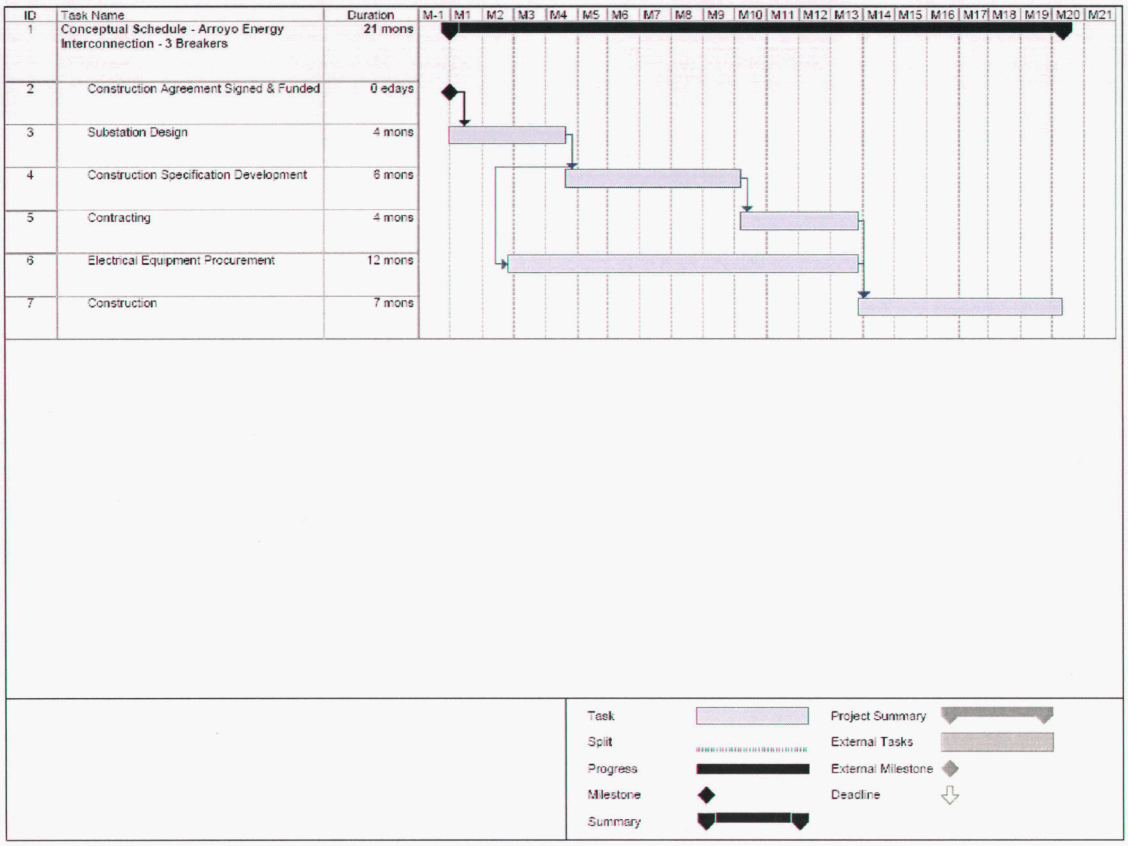

Figure 5. NAEP Project Interconnection - SIS Schedule - 6 Breaker Option.

ID	Task Name	Duration
1	**Conceptual Schedule - Arroyo Energy Interconnection - 6 Breakers**	23 mons
2	Construction Agreement Signed & Funded	0 edays
3	Substation Design	4 mons
4	Construction Specification Development	6 mons
5	Contracting	4 mons
6	Electrical Equipment Procurement	12 mons
7	Construction	9 mons

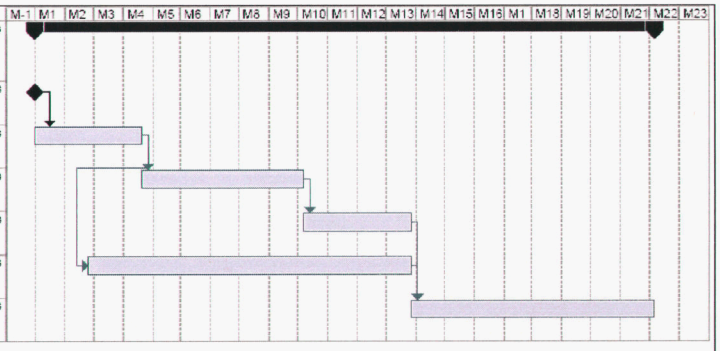

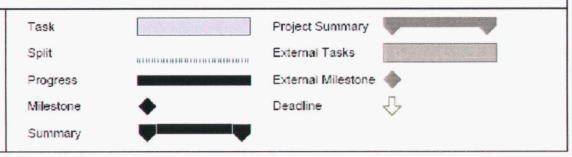

Appendix A

POWER FLOW RESULTS

The complete list of power flow results are tabulated in the following tables. Tables A-1 and A-2 model the Liberty phase-shift transformer in-service with 450 MW flowing in the south-to-north direction. Tables A-3 and A-4 have the Liberty phase-shift transformer by-passed. A description of each case is listed below.

Case	Description
1-AI-B	Indicates Minimum Area Generation, Adjusted Area Interchange to accommodate NAEP Generation - catB contingency
1-AI-C	Indicates Minimum Area Generation, Adjusted Area Interchange to accommodate NAEP Generation - catC contingency
2-LD-B	Indicates Minimum Area Generation, post-Project Load increased to match NAEP Generation - catB contingency
2-LD-C	Indicates Minimum Area Generation, post-Project Load increased to match NAEP Generation - catC contingency
3-AI-max-B	Indicates Maximum Area Generation, Adjusted Area Interchange to accommodate NAEP Generation - catB contingency
3-AI-max-C	Indicates Maximum Area Generation, Adjusted Area Interchange to accommodate NAEP Generation - catC contingency
4-LD-max-B	Indicates Maximum Area Generation, post-Project Load increased to match NAEP Generation - catB contingency
4-LD-max-C	Indicates Maximum Area Generation, post-Project Load increased to match NAEP Generation - catC contingency

Table A-1. 2008 Heavy Summer – Liberty PST In-Service – NAEP Generation displaces generation in Nevada.

						Percent of Emergency Rating		
Case	CONTINGENCY	AFFECTED ELEMENT	Norm/Emer Rating (Amps)	Pre-Project Loading (Amps)	Post-Project Loading (Amps)	Pre-Project	Post-Project	Project Impact
1-AI-B	Peacock - Mead 345 kV	Davis - McConnico 230 kV	1130/1243	1232	1495	99.1	120.3	21.2
1-AI-B	Mead 345/230 kV Transformer	Davis - McConnico 230 kV	1130/1243	1230	1494	99.0	120.2	21.2
3-AI-max-B	N.Gila - Imperial Valley 500 kV	Blythe - Niland 161 kV	592/592	632	638	106.8	107.9	1.1
3-AI-max-B	Hassayampa - N.Gila 500 kV	Blythe - Niland 161 kV	592/592	595	601	100.5	101.6	1.1
3-AI-max-B	Peacock - Mead 345 kV	Davis - McConnico 230 kV	1130/1243	1122	1385	90.3	111.5	21.2
3-AI-max-B	Mead 345/230 kV Transformer	Davis - McConnico 230 kV	1130/1243	1119	1382	90.1	111.2	21.1
1-AI-C	Hilltop - McConnico 230 kV Griffith - Peacock 230 kV	Davis - McConnico 230 kV	1130/1243	1244	1695	100.1	136.4	36.3
1-AI-C	Peacock - White Hill 345 kV Griffith - Peacock 230 kV	Davis - McConnico 230 kV	1130/1243	1248	1540	100.4	123.9	23.5
1-AI-C	White Hill - Mead 345 kV Griffith - Peacock 230 kV	Davis - McConnico 230 kV	1130/1243	1247	1538	100.3	123.8	23.5
1-AI-C	Griffith - Peacock 230 kV Mead 345/230 kV Transformer	Davis - McConnico 230 kV	1130/1243	1246	1537	100.3	123.7	23.4
1-AI-C	Peacock - White Hill 345 kV Topock - ZORB 230 kV	Davis - McConnico 230 kV	1130/1243	1243	1503	100.0	121.0	21.0
1-AI-C	White Hill - Mead 345 kV Topock - ZORB 230 kV	Davis - McConnico 230 kV	1130/1243	1241	1501	99.9	120.8	20.9
1-AI-C	Topock - ZORB 230 kV Mead 345/230 kV Transformer	Davis - McConnico 230 kV	1130/1243	1240	1500	99.8	120.7	21.0
1-AI-C	Peacock - White Hill 345 kV Mead - White Hill 345 kV	Davis - McConnico 230 kV	1130/1243	1234	1497	99.3	120.5	21.2
1-AI-C	Peacock - White Hill 345 kV Mead 345/230 kV Transformer	Davis - McConnico 230 kV	1130/1243	1234	1497	99.3	120.5	21.2
1-AI-C	Peacock - White Hill 345 kV Mead S - Mead N No.1 230 kV	Davis - McConnico 230 kV	1130/1243	1234	1497	99.3	120.5	21.2
1-AI-C	Peacock - White Hill 345 kV Mead S - Mead N No.2 230 kV	Davis - McConnico 230 kV	1130/1243	1234	1497	99.3	120.5	21.2
1-AI-C	Peacock - White Hill 345 kV S.Point - Topock No.1 230 kV	Davis - McConnico 230 kV	1130/1243	1234	1497	99.3	120.5	21.2
1-AI-C	Peacock - White Hill 345 kV S.Point - Topock No.2 230 kV	Davis - McConnico 230 kV	1130/1243	1234	1497	99.3	120.5	21.2
1-AI-C	Peacock - White Hill 345 kV Liberty - Westwing 230 kV	Davis - McConnico 230 kV	1130/1243	1232	1496	99.2	120.4	21.2
1-AI-C	Peacock - White Hill 345 kV Hilltop - McConnico 230 kV	Davis - McConnico 230 kV	1130/1243	1222	1496	98.4	120.4	22.0

Table A-1. (continued) 2008 Heavy Summer – Liberty PST In-Service – NAEP Generation displaces generation in Nevada.

Case	CONTINGENCY	AFFECTED ELEMENT	Norm/Emer Rating (Amps)	Pre-Project Loading (Amps)	Post-Project Loading (Amps)	Percent of Emergency Rating		
						Pre-Project	Post-Project	Project Impact
1-AI-C	White Hill - Mead 345 kV Mead 345/230 kV Transformer	Davis - McConnico 230 kV	1130/1243	1232	1495	99.1	120.3	21.2
1-AI-C	White Hill - Mead 345 kV Mead S - Mead N No.1 230 kV	Davis - McConnico 230 kV	1130/1243	1232	1495	99.1	120.3	21.2
1-AI-C	White Hill - Mead 345 kV Mead S - Mead N No.2 230 kV	Davis - McConnico 230 kV	1130/1243	1232	1495	99.1	120.3	21.2
1-AI-C	White Hill - Mead 345 kV S.Point - Topock No.1 230 kV	Davis - McConnico 230 kV	1130/1243	1232	1495	99.1	120.3	21.2
1-AI-C	White Hill - Mead 345 kV S.Point - Topock No.2 230 kV	Davis - McConnico 230 kV	1130/1243	1232	1495	99.1	120.3	21.2
1-AI-C	White Hill - Mead 345 kV Liberty - Westwing 230 kV	Davis - McConnico 230 kV	1130/1243	1230	1494	99.0	120.2	21.2
1-AI-C	White Hill - Mead 345 kV Hilltop - McConnico 230 kV	Davis - McConnico 230 kV	1130/1243	1221	1494	98.2	120.2	22.0
1-AI-C	Mead S - Mead N No.1 230 kV Mead 345/230 kV Transformer	Davis - McConnico 230 kV	1130/1243	1230	1494	99.0	120.2	21.2
1-AI-C	Mead S - Mead N No.2 230 kV Mead 345/230 kV Transformer	Davis - McConnico 230 kV	1130/1243	1230	1494	99.0	120.2	21.2
1-AI-C	South Pt - Topock No.1 230 kV Mead 345/230 kV Transformer	Davis - McConnico 230 kV	1130/1243	1231	1494	99.1	120.2	21.2
1-AI-C	South Pt - Topock No.2 230 kV Mead 345/230 kV Transformer	Davis - McConnico 230 kV	1130/1243	1231	1494	99.1	120.2	21.2
1-AI-C	Peacock - White Hill 345 kV Davis - Topock No.2 230 kV	Davis - McConnico 230 kV	1130/1243	1234	1494	99.3	120.2	20.9
1-AI-C	Liberty - Westwing 230 kV Mead 345/230 kV Transformer	Davis - McConnico 230 kV	1130/1243	1229	1493	98.9	120.1	21.2
1-AI-C	Hilltop - McConnico 230 kV Mead 345/230 kV Transformer	Davis - McConnico 230 kV	1130/1243	1219	1492	98.1	120.1	22.0
1-AI-C	White Hill - Mead 345 kV Davis - Topock No.2 230 kV	Davis - McConnico 230 kV	1130/1243	1232	1492	99.1	120.0	20.9

Table A-1. (continued) 2008 Heavy Summer – Liberty PST In-Service – NAEP Generation displaces generation in Nevada.

Case	CONTINGENCY	AFFECTED ELEMENT	Norm/Emer Rating (Amps)	Pre-Project Loading (Amps)	Post-Project Loading (Amps)	Percent of Emergency Rating		
						Pre-Project	Post-Project	Project Impact
1-AI-C	Davis - Topock No.2 230 kV Mead 345/230 kV Transformer	Davis - McConnico 230 kV	1130/1243	1231	1490	99.0	119.9	20.9
1-AI-C	Peacock - White Hill 345 kV Davis - ZORB 230 kV	Davis - McConnico 230 kV	1130/1243	1216	1476	97.9	118.8	20.9
1-AI-C	White Hill - Mead 345 kV Davis - ZORB 230 kV	Davis - McConnico 230 kV	1130/1243	1214	1474	97.7	118.6	20.9
1-AI-C	Davis - ZORB 230 kV Mead 345/230 kV Transformer	Davis - McConnico 230 kV	1130/1243	1212	1473	97.6	118.5	21.0
1-AI-C	Peacock - White Hill 345 kV Hilltop - Peacock 230 kV	Davis - McConnico 230 kV	1130/1243	1166	1439	93.8	115.8	22.0
1-AI-C	White Hill - Mead 345 kV Hilltop - Peacock 230 kV	Davis - McConnico 230 kV	1130/1243	1164	1437	93.7	115.6	21.9
1-AI-C	Peacock - White Hill 345 kV N.Havasu - Topock 230 kV	Davis - McConnico 230 kV	1130/1243	1179	1437	94.9	115.6	20.8
1-AI-C	Hilltop - Peacock 230 kV Mead 345/230 kV Transformer	Davis - McConnico 230 kV	1130/1243	1163	1436	93.6	115.5	22.0
1-AI-C	Griffith - Peacock 230 kV Hilltop - Peacock 230 kV	Davis - McConnico 230 kV	1130/1243	989	1435	80.0	115.5	35.5
1-AI-C	White Hill - Mead 345 kV N.Havasu - Topock 230 kV	Davis - McConnico 230 kV	1130/1243	1177	1434	94.7	115.4	20.7
1-AI-C	N.Havasu - Topock 230 kV Mead 345/230 kV Transformer	Davis - McConnico 230 kV	1130/1243	1176	1433	94.6	115.3	20.7
1-AI-C	Peacock - White Hill 345 kV Black Mesa - Topock 230 kV	Davis - McConnico 230 kV	1130/1243	1172	1429	94.4	115.0	20.7
1-AI-C	White Hill - Mead 345 kV Black Mesa - Topock 230 kV	Davis - McConnico 230 kV	1130/1243	1170	1427	94.2	114.8	20.7
1-AI-C	Black Mesa - Topock 230 kV Mead 345/230 kV Transformer	Davis - McConnico 230 kV	1130/1243	1169	1426	94.1	114.7	20.7
1-AI-C	Peacock - White Hill 345 kV Davis - Mead N 230 kV	Davis - McConnico 230 kV	1130/1243	1110	1349	89.3	108.6	19.3

Table A-1. (continued) 2008 Heavy Summer – Liberty PST In-Service – NAEP Generation displaces generation in Nevada.

Case	CONTINGENCY	AFFECTED ELEMENT	Norm/Emer Rating (Amps)	Pre-Project Loading (Amps)	Post-Project Loading (Amps)	Percent of Emergency Rating		
						Pre-Project	Post-Project	Project Impact
1-AI-C	White Hill - Mead 345 kV Davis - Mead N 230 kV	Davis - McConnico 230 kV	1130/1243	1107	1347	89.1	108.4	19.3
1-AI-C	Davis - Mead N 230 kV Mead 345/230 kV Transformer	Davis - McConnico 230 kV	1130/1243	1106	1345	89.0	108.3	19.3
1-AI-C	Peacock - White Hill 345 kV Davis - Mc Cullough 230 kV	Davis - McConnico 230 kV	1130/1243	1103	1341	88.8	107.9	19.2
1-AI-C	White Hill - Mead 345 kV Davis - Mc Cullough 230 kV	Davis - McConnico 230 kV	1130/1243	1100	1338	88.5	107.7	19.2
1-AI-C	Davis - Mc Cullough 230 kV Mead 345/230 kV Transformer	Davis - McConnico 230 kV	1130/1243	1098	1337	88.4	107.6	19.2
1-AI-C	South Pt - Topock No.1 230 kV South Pt - Topock No.2 230 kV	Davis - McConnico 230 kV	1130/1243	1042	1252	83.9	100.8	16.9
1-AI-C	Davis - McConnico 230 kV Griffith - Peacock 230 kV	Hilltop - McConnico 230 kV	1130/1243	1257	1724	101.1	138.7	37.6
1-AI-C	Davis - McConnico 230 kV Griffith - Peacock 230 kV	Hilltop - Peacock 230 kV	1130/1243	1002	1463	80.6	117.8	37.2
1-AI-C	Peacock - White Hill 345 kV Griffith - McConnico 230 kV	Hilltop - Peacock 230 kV	1130/1243	1246	1450	100.3	116.7	16.5
1-AI-C	White Hill - Mead 345 kV Griffith - McConnico 230 kV	Hilltop - Peacock 230 kV	1130/1243	1241	1445	99.9	116.3	16.4
1-AI-C	Griffith - McConnico 230 kV Mead 345/230 kV Transformer	Hilltop - Peacock 230 kV	1130/1243	1239	1441	99.7	116.0	16.3
1-AI-C	Peacock 345/230 kV Transfmr Griffith - McConnico 230 kV	Hilltop - Peacock 230 kV	1130/1243	1005	1294	80.9	104.1	23.3
1-AI-C	Peacock 345/230 kV Transfmr Davis - McConnico 230 kV	Prescott - Yavapai 230 kV	670/811	530	885	65.4	109.1	43.7
1-AI-C	Peacock 345/230 kV Transfmr Davis - McConnico 230 kV	Round Valley - Peacock 230 kV	816/897	1028	1534	114.6	170.9	56.3
1-AI-C	Peacock 345/230 kV Transfmr Davis - McConnico 230 kV	Round Valley - Prescott 230 kV	816/897	999	1504	111.3	167.6	56.3

Table A-1. (continued) 2008 Heavy Summer – Liberty PST In-Service – NAEP Generation displaces generation in Nevada.

						Percent of Emergency Rating		
Case	CONTINGENCY	AFFECTED ELEMENT	Norm/Emer Rating (Amps)	Pre-Project Loading (Amps)	Post-Project Loading (Amps)	Pre-Project	Post-Project	Project Impact
3-Al-max-C	Hilltop - McConnico 230 kV Griffith - Peacock 230 kV	Davis - McConnico 230 kV	1130/1243	1276	1733	102.7	139.5	36.8
3-Al-max-C	Griffith - Peacock 230 kV Hilltop - Peacock 230 kV	Davis - McConnico 230 kV	1130/1243	1023	1470	82.3	118.3	36.0
3-Al-max-C	Peacock - White Hill 345 kV Griffith - Peacock 230 kV	Davis - McConnico 230 kV	1130/1243	1151	1443	92.7	116.2	23.5
3-Al-max-C	White Hill - Mead 345 kV Griffith - Peacock 230 kV	Davis - McConnico 230 kV	1130/1243	1149	1441	92.5	116.0	23.5
3-Al-max-C	Griffith - Peacock 230 kV Mead 345/230 kV Transformer	Davis - McConnico 230 kV	1130/1243	1148	1439	92.4	115.8	23.4
3-Al-max-C	Peacock - White Hill 345 kV Hilltop - McConnico 230 kV	Davis - McConnico 230 kV	1130/1243	1127	1400	90.7	112.7	22.0
3-Al-max-C	Peacock - White Hill 345 kV Topock - ZORB 230 kV	Davis - McConnico 230 kV	1130/1243	1139	1399	91.7	112.6	21.0
3-Al-max-C	White Hill - Mead 345 kV Hilltop - McConnico 230 kV	Davis - McConnico 230 kV	1130/1243	1124	1398	90.5	112.5	22.0
3-Al-max-C	White Hill - Mead 345 kV Topock - ZORB 230 kV	Davis - McConnico 230 kV	1130/1243	1137	1397	91.5	112.5	20.9
3-Al-max-C	Hilltop - McConnico 230 kV Mead 345/230 kV Transformer	Davis - McConnico 230 kV	1130/1243	1123	1396	90.4	112.4	22.0
3-Al-max-C	Topock - ZORB 230 kV Mead 345/230 kV Transformer	Davis - McConnico 230 kV	1130/1243	1136	1396	91.4	112.4	20.9
3-Al-max-C	Peacock - White Hill 345 kV Davis - Topock No.2 230 kV	Davis - McConnico 230 kV	1130/1243	1131	1390	91.0	111.9	20.9
3-Al-max-C	White Hill - Mead 345 kV Davis - Topock No.2 230 kV	Davis - McConnico 230 kV	1130/1243	1129	1388	90.9	111.7	20.9
3-Al-max-C	Davis - Topock No.2 230 kV Mead 345/230 kV Transformer	Davis - McConnico 230 kV	1130/1243	1128	1387	90.8	111.6	20.9
3-Al-max-C	Peacock - White Hill 345 kV Liberty - Westwing 230 kV	Davis - McConnico 230 kV	1130/1243	1122	1386	90.3	111.5	21.2

Table A-1. (continued) 2008 Heavy Summer – Liberty PST In-Service – NAEP Generation displaces generation in Nevada.

Case	CONTINGENCY	AFFECTED ELEMENT	Norm/Emer Rating (Amps)	Pre-Project Loading (Amps)	Post-Project Loading (Amps)	Percent of Emergency Rating		
						Pre-Project	Post-Project	Project Impact
3-Al-max-C	Peacock - White Hill 345 kV Mead S - Mead N No.1 230 kV	Davis - McConnico 230 kV	1130/1243	1122	1385	90.3	111.5	21.2
3-Al-max-C	Peacock - White Hill 345 kV Mead S - Mead N No.2 230 kV	Davis - McConnico 230 kV	1130/1243	1122	1385	90.3	111.5	21.2
3-Al-max-C	Peacock - White Hill 345 kV Mead - White Hill 345 kV	Davis - McConnico 230 kV	1130/1243	1122	1385	90.3	111.5	21.2
3-Al-max-C	Peacock - White Hill 345 kV Mead 345/230 kV Transformer	Davis - McConnico 230 kV	1130/1243	1122	1385	90.3	111.5	21.2
3-Al-max-C	Peacock - White Hill 345 kV S.Point - Topock No.1 230 kV	Davis - McConnico 230 kV	1130/1243	1122	1385	90.3	111.5	21.2
3-Al-max-C	Peacock - White Hill 345 kV S.Point - Topock No.2 230 kV	Davis - McConnico 230 kV	1130/1243	1122	1385	90.3	111.5	21.2
3-Al-max-C	White Hill - Mead 345 kV Liberty - Westwing 230 kV	Davis - McConnico 230 kV	1130/1243	1120	1384	90.1	111.4	21.2
3-Al-max-C	White Hill - Mead 345 kV Mead 345/230 kV Transformer	Davis - McConnico 230 kV	1130/1243	1120	1383	90.2	111.3	21.2
3-Al-max-C	White Hill - Mead 345 kV Mead S - Mead N No.1 230 kV	Davis - McConnico 230 kV	1130/1243	1120	1383	90.2	111.3	21.2
3-Al-max-C	White Hill - Mead 345 kV Mead S - Mead N No.2 230 kV	Davis - McConnico 230 kV	1130/1243	1120	1383	90.2	111.3	21.2
3-Al-max-C	White Hill - Mead 345 kV S.Point - Topock No.1 230 kV	Davis - McConnico 230 kV	1130/1243	1120	1383	90.1	111.3	21.2
3-Al-max-C	White Hill - Mead 345 kV S.Point - Topock No.2 230 kV	Davis - McConnico 230 kV	1130/1243	1120	1383	90.1	111.3	21.2
3-Al-max-C	Liberty - Westwing 230 kV Mead 345/230 kV Transformer	Davis - McConnico 230 kV	1130/1243	1119	1382	90.0	111.2	21.2
3-Al-max-C	Mead S - Mead N No.1 230 kV Mead 345/230 kV Transformer	Davis - McConnico 230 kV	1130/1243	1119	1382	90.1	111.2	21.1
3-Al-max-C	Mead S - Mead N No.2 230 kV Mead 345/230 kV Transformer	Davis - McConnico 230 kV	1130/1243	1119	1382	90.1	111.2	21.1

Table A-1. (continued) 2008 Heavy Summer – Liberty PST In-Service – NAEP Generation displaces generation in Nevada.

Case	CONTINGENCY	AFFECTED ELEMENT	Norm/Emer Rating (Amps)	Pre-Project Loading (Amps)	Post-Project Loading (Amps)	Percent of Emergency Rating		
						Pre-Project	Post-Project	Project Impact
3-Al-max-C	South Pt - Topock No.1 230 kV Mead 345/230 kV Transformer	Davis - McConnico 230 kV	1130/1243	1119	1382	90.1	111.2	21.1
3-Al-max-C	South Pt - Topock No.2 230 kV Mead 345/230 kV Transformer	Davis - McConnico 230 kV	1130/1243	1119	1382	90.1	111.2	21.1
3-Al-max-C	Peacock - White Hill 345 kV Davis - ZORB 230 kV	Davis - McConnico 230 kV	1130/1243	1112	1372	89.5	110.4	20.9
3-Al-max-C	White Hill - Mead 345 kV Davis - ZORB 230 kV	Davis - McConnico 230 kV	1130/1243	1110	1369	89.3	110.2	20.9
3-Al-max-C	Davis - ZORB 230 kV Mead 345/230 kV Transformer	Davis - McConnico 230 kV	1130/1243	1109	1368	89.2	110.1	20.9
3-Al-max-C	Peacock - White Hill 345 kV Hilltop - Peacock 230 kV	Davis - McConnico 230 kV	1130/1243	1070	1343	86.1	108.1	22.0
3-Al-max-C	White Hill - Mead 345 kV Hilltop - Peacock 230 kV	Davis - McConnico 230 kV	1130/1243	1068	1341	86.0	107.9	21.9
3-Al-max-C	Hilltop - Peacock 230 kV Mead 345/230 kV Transformer	Davis - McConnico 230 kV	1130/1243	1067	1339	85.9	107.8	21.9
3-Al-max-C	Peacock - White Hill 345 kV N.Havasu - Topock 230 kV	Davis - McConnico 230 kV	1130/1243	1070	1327	86.1	106.8	20.7
3-Al-max-C	White Hill - Mead 345 kV N.Havasu - Topock 230 kV	Davis - McConnico 230 kV	1130/1243	1068	1325	85.9	106.6	20.7
3-Al-max-C	N.Havasu - Topock 230 kV Mead 345/230 kV Transformer	Davis - McConnico 230 kV	1130/1243	1066	1323	85.8	106.5	20.7
3-Al-max-C	Peacock - White Hill 345 kV Black Mesa - Topock 230 kV	Davis - McConnico 230 kV	1130/1243	1064	1320	85.6	106.3	20.6
3-Al-max-C	White Hill - Mead 345 kV Black Mesa - Topock 230 kV	Davis - McConnico 230 kV	1130/1243	1062	1318	85.4	106.0	20.6
3-Al-max-C	Black Mesa - Topock 230 kV Mead 345/230 kV Transformer	Davis - McConnico 230 kV	1130/1243	1060	1316	85.3	105.9	20.6
3-Al-max-C	Davis - McConnico 230 kV Griffith - Peacock 230 kV	Hilltop - McConnico 230 kV	1130/1243	1289	1760	103.8	141.6	37.9

Table A-1. (continued) 2008 Heavy Summer – Liberty PST In-Service – NAEP Generation displaces generation in Nevada.

Case	CONTINGENCY	AFFECTED ELEMENT	Norm/Emer Rating (Amps)	Pre-Project Loading (Amps)	Post-Project Loading (Amps)	Percent of Emergency Rating		
						Pre-Project	Post-Project	Project Impact
3-Al-max-C	Davis - McConnico 230 kV Griffith - Peacock 230 kV	Hilltop - Peacock 230 kV	1130/1243	1033	1499	83.2	120.6	37.5
3-Al-max-C	Peacock - White Hill 345 kV Griffith - McConnico 230 kV	Hilltop - Peacock 230 kV	1130/1243	1143	1347	92.0	108.4	16.5
3-Al-max-C	White Hill - Mead 345 kV Griffith - McConnico 230 kV	Hilltop - Peacock 230 kV	1130/1243	1138	1341	91.6	108.0	16.4
3-Al-max-C	Griffith - McConnico 230 kV Mead 345/230 kV Transformer	Hilltop - Peacock 230 kV	1130/1243	1135	1338	91.4	107.7	16.3
3-Al-max-C	Peacock 345/230 kV Transfmr Davis - McConnico 230 kV	Prescott - Yavapai 230 kV	670/811	566	859	69.8	105.9	36.1
3-Al-max-C	Peacock 345/230 kV Transfmr Davis - McConnico 230 kV	Round Valley - Peacock 230 kV	816/897	1066	1503	118.8	167.4	48.6
3-Al-max-C	Peacock - White Hill 345 kV Davis - McConnico 230 kV	Round Valley - Peacock 230 kV	816/897	750	938	83.6	104.5	20.9
3-Al-max-C	White Hill - Mead 345 kV Davis - McConnico 230 kV	Round Valley - Peacock 230 kV	816/897	710	934	80.0	104.0	24.0
3-Al-max-C	Davis - McConnico 230 kV Mead 345/230 kV Transformer	Round Valley - Peacock 230 kV	816/897	744	931	82.9	103.7	20.8
3-Al-max-C	Peacock 345/230 kV Transfrmr Davis - McConnico 230 kV	Round Valley - Prescott 230 kV	816/897	1036	1474	115.5	164.2	48.8
3-Al-max-C	Peacock - White Hill 345 kV Davis - McConnico 230 kV	Round Valley - Prescott 230 kV	816/897	722	909	80.4	101.3	20.9
3-Al-max-C	White Hill - Mead 345 kV Davis - McConnico 230 kV	Round Valley - Prescott 230 kV	816/897	718	905	80.1	100.8	20.8
3-Al-max-C	Davis - McConnico 230 kV Mead 345/230 kV Transformer	Round Valley - Prescott 230 kV	816/897	709	902	79.8	100.6	20.8

Table A-2. 2008 Heavy Summer – Liberty PST In-Service – NAEP Generation serving regional load growth.

Case	CONTINGENCY	AFFECTED ELEMENT	Norm/Emer Rating (Amps)	Pre-Project Loading (Amps)	Post-Project Loading (Amps)	Percent of Emergency Rating		
						Pre-Project	Post-Project	Project Impact
2-LD-B	Peacock - WhiteHill 345 kV	Davis - McConnico 230 kV	1130/1243	1234	1442	99.3	116.0	16.7
2-LD-B	WhiteHill - Mead 345 kV	Davis - McConnico 230 kV	1130/1243	1232	1347	99.1	108.4	9.3
2-LD-B	Mead 345/230 kV Transformer	Davis - McConnico 230 kV	1130/1243	1230	1346	99.0	108.3	9.3
4-LD-max-B	Peacock - WhiteHill 345 kV	Davis - McConnico 230 kV	1130/1243	1122	1328	90.3	106.9	16.6
2-LD-C	Hilltop - McConnico 230 kV Griffith - Peacock 230 kV	Davis - McConnico 230 kV	1130/1243	1244	1698	100.1	136.6	36.5
2-LD-C	Peacock - White Hill 345 kV Griffith - Peacock 230 kV	Davis - McConnico 230 kV	1130/1243	1248	1484	100.4	119.5	19.0
2-LD-C	Peacock - White Hill 345 kV Hilltop - McConnico 230 kV	Davis - McConnico 230 kV	1130/1243	1222	1454	98.4	117.0	18.7
2-LD-C	Peacock - White Hill 345 kV Topock - ZORB 230 kV	Davis - McConnico 230 kV	1130/1243	1243	1447	100.0	116.4	16.4
2-LD-C	Peacock - White Hill 345 kV Mead S - Mead N No.1 230 kV	Davis - McConnico 230 kV	1130/1243	1234	1442	99.3	116.0	16.8
2-LD-C	Peacock - White Hill 345 kV Mead S - Mead N No.2 230 kV	Davis - McConnico 230 kV	1130/1243	1234	1442	99.3	116.0	16.8
2-LD-C	Peacock - White Hill 345 kV S.Point - Topock No.1 230 kV	Davis - McConnico 230 kV	1130/1243	1234	1442	99.3	116.0	16.7
2-LD-C	Peacock - White Hill 345 kV S.Point - Topock No.2 230 kV	Davis - McConnico 230 kV	1130/1243	1234	1442	99.3	116.0	16.7
2-LD-C	Peacock - White Hill 345 kV Liberty - Westwing 230 kV	Davis - McConnico 230 kV	1130/1243	1232	1441	99.2	116.0	16.8
2-LD-C	Peacock - White Hill 345 kV Mead - White Hill 345 kV	Davis - McConnico 230 kV	1130/1243	1234	1438	99.3	115.7	16.4
2-LD-C	Peacock - White Hill 345 kV Mead 345/230 kV Transformer	Davis - McConnico 230 kV	1130/1243	1234	1438	99.3	115.7	16.4
2-LD-C	Peacock - White Hill 345 kV Davis - Topock No.2 230 kV	Davis - McConnico 230 kV	1130/1243	1234	1437	99.3	115.7	16.4
2-LD-C	Peacock - White Hill 345 kV Davis - ZORB 230 kV	Davis - McConnico 230 kV	1130/1243	1216	1420	97.9	114.3	16.4
2-LD-C	White Hill - Mead 345 kV Griffith - Peacock 230 kV	Davis - McConnico 230 kV	1130/1243	1247	1399	100.3	112.6	12.2
2-LD-C	Griffith - Peacock 230 kV Mead 345/230 kV Transformer	Davis - McConnico 230 kV	1130/1243	1246	1398	100.3	112.5	12.2

Table A-2. (continued) 2008 Heavy Summer – Liberty PST In-Service – NAEP Generation serving regional load growth.

Case	CONTINGENCY	AFFECTED ELEMENT	Norm/Emer Rating (Amps)	Pre-Project Loading (Amps)	Post-Project Loading (Amps)	Percent of Emergency Rating		
						Pre-Project	Post-Project	Project Impact
2-LD-C	Peacock - White Hill 345 kV Hilltop - Peacock 230 kV	Davis - McConnico 230 kV	1130/1243	1166	1377	93.8	110.9	17.0
2-LD-C	Peacock - White Hill 345 kV Black Mesa - Topock 230 kV	Davis - McConnico 230 kV	1130/1243	1172	1376	94.4	110.7	16.4
2-LD-C	Peacock - White Hill 345 kV N.Havasu - Topock 230 kV	Davis - McConnico 230 kV	1130/1243	1179	1376	94.9	110.7	15.9
2-LD-C	White Hill - Mead 345 kV Hilltop - McConnico 230 kV	Davis - McConnico 230 kV	1130/1243	1221	1370	98.2	110.2	12.0
2-LD-C	Hilltop - McConnico 230 kV Mead 345/230 kV Transformer	Davis - McConnico 230 kV	1130/1243	1219	1369	98.1	110.2	12.0
2-LD-C	White Hill - Mead 345 kV Topock - ZORB 230 kV	Davis - McConnico 230 kV	1130/1243	1241	1352	99.9	108.8	9.0
2-LD-C	Topock - ZORB 230 kV Mead 345/230 kV Transformer	Davis - McConnico 230 kV	1130/1243	1240	1351	99.8	108.8	9.0
2-LD-C	Griffith - Peacock 230 kV Hilltop - Peacock 230 kV	Davis - McConnico 230 kV	1130/1243	989	1351	80.0	108.8	28.8
2-LD-C	White Hill - Mead 345 kV Mead 345/230 kV Transformer	Davis - McConnico 230 kV	1130/1243	1232	1347	99.1	108.4	9.3
2-LD-C	White Hill - Mead 345 kV Mead S - Mead N No.1 230 kV	Davis - McConnico 230 kV	1130/1243	1232	1347	99.1	108.4	9.3
2-LD-C	White Hill - Mead 345 kV Mead S - Mead N No.2 230 kV	Davis - McConnico 230 kV	1130/1243	1232	1347	99.1	108.4	9.3
2-LD-C	White Hill - Mead 345 kV S.Point - Topock No.1 230 kV	Davis - McConnico 230 kV	1130/1243	1232	1347	99.1	108.4	9.2
2-LD-C	White Hill - Mead 345 kV S.Point - Topock No.2 230 kV	Davis - McConnico 230 kV	1130/1243	1232	1347	99.1	108.4	9.2
2-LD-C	Mead S - Mead N No.1 230 kV Mead 345/230 kV Transformer	Davis - McConnico 230 kV	1130/1243	1230	1346	99.0	108.3	9.3
2-LD-C	Mead S - Mead N No.2 230 kV Mead 345/230 kV Transformer	Davis - McConnico 230 kV	1130/1243	1230	1346	99.0	108.3	9.3
2-LD-C	South Pt - Topock No.1 230 kV Mead 345/230 kV Transformer	Davis - McConnico 230 kV	1130/1243	1231	1346	99.1	108.3	9.2

Table A-2. (continued) 2008 Heavy Summer – Liberty PST In-Service – NAEP Generation serving regional load growth.

Case	CONTINGENCY	AFFECTED ELEMENT	Norm/Emer Rating (Amps)	Pre-Project Loading (Amps)	Post-Project Loading (Amps)	Percent of Emergency Rating		
						Pre-Project	Post-Project	Project Impact
2-LD-C	South Pt - Topock No.2 230 kV Mead 345/230 kV Transformer	Davis - McConnico 230 kV	1130/1243	1231	1346	99.1	108.3	9.2
2-LD-C	White Hill - Mead 345 kV Liberty - Westwing 230 kV	Davis - McConnico 230 kV	1130/1243	1230	1345	99.0	108.2	9.2
2-LD-C	Liberty - Westwing 230 kV Mead 345/230 kV Transformer	Davis - McConnico 230 kV	1130/1243	1229	1344	98.9	108.1	9.2
2-LD-C	White Hill - Mead 345 kV Davis - Topock No.2 230 kV	Davis - McConnico 230 kV	1130/1243	1232	1343	99.1	108.1	8.9
2-LD-C	Davis - Topock No.2 230 kV Mead 345/230 kV Transformer	Davis - McConnico 230 kV	1130/1243	1231	1342	99.0	108.0	9.0
2-LD-C	White Hill - Mead 345 kV Davis - ZORB 230 kV	Davis - McConnico 230 kV	1130/1243	1214	1325	97.7	106.7	9.0
2-LD-C	Davis - ZORB 230 kV Mead 345/230 kV Transformer	Davis - McConnico 230 kV	1130/1243	1212	1324	97.6	106.6	9.0
2-LD-C	Peacock - White Hill 345 kV Davis - Mead N 230 kV	Davis - McConnico 230 kV	1130/1243	1110	1304	89.3	105.0	15.7
2-LD-C	Peacock - White Hill 345 kV Davis - Mc Cullough 230 kV	Davis - McConnico 230 kV	1130/1243	1103	1300	88.8	104.6	15.9
2-LD-C	White Hill - Mead 345 kV Hilltop - Peacock 230 kV	Davis - McConnico 230 kV	1130/1243	1164	1294	93.7	104.1	10.4
2-LD-C	Hilltop - Peacock 230 kV Mead 345/230 kV Transformer	Davis - McConnico 230 kV	1130/1243	1163	1293	93.6	104.1	10.5
2-LD-C	White Hill - Mead 345 kV Black Mesa - Topock 230 kV	Davis - McConnico 230 kV	1130/1243	1170	1282	94.2	103.2	9.0
2-LD-C	White Hill - Mead 345 kV N.Havasu - Topock 230 kV	Davis - McConnico 230 kV	1130/1243	1177	1282	94.7	103.2	8.5
2-LD-C	Black Mesa - Topock 230 kV Mead 345/230 kV Transformer	Davis - McConnico 230 kV	1130/1243	1169	1281	94.1	103.1	9.1
2-LD-C	N.Havasu - Topock 230 kV Mead 345/230 kV Transformer	Davis - McConnico 230 kV	1130/1243	1176	1281	94.6	103.1	8.5
2-LD-C	Davis - McConnico 230 kV Griffith - Peacock 230 kV	Hilltop - McConnico 230 kV	1130/1243	1257	1721	101.1	138.5	37.4

Table A-2. (continued) 2008 Heavy Summer – Liberty PST In-Service – NAEP Generation serving regional load growth.

						Percent of Emergency Rating		
Case	CONTINGENCY	AFFECTED ELEMENT	Norm/Emer Rating (Amps)	Pre-Project Loading (Amps)	Post-Project Loading (Amps)	Pre-Project	Post-Project	Project Impact
2-LD-C	Peacock - White Hill 345 kV Griffith - McConnico 230 kV	Hilltop - Peacock 230 kV	1130/1243	1246	1481	100.3	119.2	18.9
2-LD-C	White Hill - Mead 345 kV Griffith - McConnico 230 kV	Hilltop - Peacock 230 kV	1130/1243	1241	1390	99.9	111.8	11.9
2-LD-C	Griffith - McConnico 230 kV Mead 345/230 kV Transformer	Hilltop - Peacock 230 kV	1130/1243	1239	1387	99.7	111.6	11.9
2-LD-C	Davis - McConnico 230 kV Griffith - Peacock 230 kV	Hilltop - Peacock 230 kV	1130/1243	1002	1373	80.6	110.5	29.9
2-LD-C	Peacock 345/230 kV Transfrmr Griffith - McConnico 230 kV	Hilltop - Peacock 230 kV	1130/1243	1005	1331	80.9	107.1	26.3
2-LD-C	Peacock 345/230 kV Transfrmr Davis - McConnico 230 kV	Prescott - Yavapai 230 kV	670/811	530	927	65.4	114.3	48.9
2-LD-C	Peacock 345/230 kV Transfrmr Davis - McConnico 230 kV	Round Valley - Peacock 230 kV	816/897	1028	1560	114.6	173.8	59.3
2-LD-C	Peacock 345/230 kV Transfrmr Davis - McConnico 230 kV	Round Valley - Prescott 230 kV	816/897	999	1527	111.3	170.1	58.9
4-LD-max-C	Hilltop - McConnico 230 kV Griffith - Peacock 230 kV	Davis - McConnico 230 kV	1130/1243	1276	1733	102.7	139.4	36.7
4-LD-max-C	Peacock - White Hill 345 kV Griffith - Peacock 230 kV	Davis - McConnico 230 kV	1130/1243	1151	1386	92.7	111.5	18.9
4-LD-max-C	Griffith - Peacock 230 kV Hilltop - Peacock 230 kV	Davis - McConnico 230 kV	1130/1243	1023	1382	82.3	111.2	28.9
4-LD-max-C	Peacock - White Hill 345 kV Hilltop - McConnico 230 kV	Davis - McConnico 230 kV	1130/1243	1127	1356	90.7	109.2	18.5
4-LD-max-C	Peacock - White Hill 345 kV Topock - ZORB 230 kV	Davis - McConnico 230 kV	1130/1243	1139	1341	91.7	107.9	16.3
4-LD-max-C	Peacock - White Hill 345 kV Davis - Topock No.2 230 kV	Davis - McConnico 230 kV	1130/1243	1131	1332	91.0	107.2	16.2
4-LD-max-C	Peacock - White Hill 345 kV Liberty - Westwing 230 kV	Davis - McConnico 230 kV	1130/1243	1122	1329	90.3	106.9	16.6
4-LD-max-C	Peacock - White Hill 345 kV Mead S - Mead N No.1 230 kV	Davis - McConnico 230 kV	1130/1243	1122	1328	90.3	106.9	16.6

Table A-2. (continued) 2008 Heavy Summer – Liberty PST In-Service – NAEP Generation serving regional load growth.

Case	CONTINGENCY	AFFECTED ELEMENT	Norm/Emer Rating (Amps)	Pre-Project Loading (Amps)	Post-Project Loading (Amps)	Percent of Emergency Rating		
						Pre-Project	Post-Project	Project Impact
4-LD-max-C	Peacock - White Hill 345 kV Mead S - Mead N No.2 230 kV	Davis - McConnico 230 kV	1130/1243	1122	1328	90.3	106.9	16.6
4-LD-max-C	Peacock - White Hill 345 kV S.Point - Topock No.1 230 kV	Davis - McConnico 230 kV	1130/1243	1122	1328	90.3	106.9	16.6
4-LD-max-C	Peacock - White Hill 345 kV S.Point - Topock No.2 230 kV	Davis - McConnico 230 kV	1130/1243	1122	1328	90.3	106.9	16.6
4-LD-max-C	Peacock - White Hill 345 kV Mead - White Hill 345 kV	Davis - McConnico 230 kV	1130/1243	1122	1324	90.3	106.6	16.3
4-LD-max-C	Peacock - White Hill 345 kV Mead 345/230 kV Transformer	Davis - McConnico 230 kV	1130/1243	1122	1324	90.3	106.6	16.3
4-LD-max-C	Peacock - White Hill 345 kV Davis - ZORB 230 kV	Davis - McConnico 230 kV	1130/1243	1112	1314	89.5	105.7	16.2
4-LD-max-C	White Hill - Mead 345 kV Griffith - Peacock 230 kV	Davis - McConnico 230 kV	1130/1243	1149	1300	92.5	104.6	12.1
4-LD-max-C	Griffith - Peacock 230 kV Mead 345/230 kV Transformer	Davis - McConnico 230 kV	1130/1243	1148	1299	92.4	104.5	12.1
4-LD-max-C	Peacock - White Hill 345 kV Hilltop - Peacock 230 kV	Davis - McConnico 230 kV	1130/1243	1070	1280	86.1	103.0	16.9
4-LD-max-C	White Hill - Mead 345 kV Hilltop - McConnico 230 kV	Davis - McConnico 230 kV	1130/1243	1124	1272	90.5	102.4	11.9
4-LD-max-C	Hilltop - McConnico 230 kV Mead 345/230 kV Transformer	Davis - McConnico 230 kV	1130/1243	1123	1271	90.4	102.3	11.9
4-LD-max-C	Peacock - White Hill 345 kV Black Mesa - Topock 230 kV	Davis - McConnico 230 kV	1130/1243	1064	1265	85.6	101.8	16.2
4-LD-max-C	Peacock - White Hill 345 kV N.Havasu - Topock 230 kV	Davis - McConnico 230 kV	1130/1243	1070	1265	86.1	101.8	15.7
4-LD-max-C	White Hill - Mead 345 kV Topock - ZORB 230 kV	Davis - McConnico 230 kV	1130/1243	1137	1247	91.5	100.4	8.9
4-LD-max-C	Topock - ZORB 230 kV Mead 345/230 kV Transformer	Davis - McConnico 230 kV	1130/1243	1136	1246	91.4	100.3	8.9
4-LD-max-C	Davis - McConnico 230 kV Griffith - Peacock 230 kV	Hilltop - McConnico 230 kV	1130/1243	1289	1753	103.8	141.1	37.4

Table A-2. (continued) 2008 Heavy Summer – Liberty PST In-Service – NAEP Generation serving regional load growth.

						Percent of Emergency Rating		
Case	CONTINGENCY	AFFECTED ELEMENT	Norm/Emer Rating (Amps)	Pre-Project Loading (Amps)	Post-Project Loading (Amps)	Pre-Project	Post-Project	Project Impact
4-LD-max-C	Davis - McConnico 230 kV Griffith - Peacock 230 kV	Hilltop - Peacock 230 kV	1130/1243	1033	1405	83.2	113.0	29.9
4-LD-max-C	Peacock - White Hill 345 kV Griffith - McConnico 230 kV	Hilltop - Peacock 230 kV	1130/1243	1143	1376	92.0	110.7	18.8
4-LD-max-C	White Hill - Mead 345 kV Griffith - McConnico 230 kV	Hilltop - Peacock 230 kV	1130/1243	1138	1285	91.6	103.5	11.9
4-LD-max-C	Griffith - McConnico 230 kV Mead 345/230 kV Transformer	Hilltop - Peacock 230 kV	1130/1243	1135	1282	91.4	103.2	11.8
4-LD-max-C	Peacock 345/230 kV Transfrmr Griffith - McConnico 230 kV	Hilltop - Peacock 230 kV	1130/1243	934	1262	82.8	101.5	18.7
4-LD-max-C	Peacock 345/230 kV Transfrmr Davis - McConnico 230 kV	Prescott - Yavapai 230 kV	670/811	566	903	69.8	111.4	41.6
4-LD-max-C	Peacock 345/230 kV Transfrmr Davis - McConnico 230 kV	Round Valley - Peacock 230 kV	816/897	1066	1532	118.8	170.7	51.9
4-LD-max-C	Peacock 345/230 kV Transfrmr Davis - McConnico 230 kV	Round Valley - Prescott 230 kV	816/897	1036	1500	115.5	167.2	51.7

Table A-3. 2008 Heavy Summer – Liberty PST By-Passed – NAEP Generation displaces generation in Nevada.

Case	CONTINGENCY	AFFECTED ELEMENT	Norm/Emer Rating (Amps)	Pre-Project Loading (Amps)	Post-Project Loading (Amps)	Percent of Emergency Rating		
						Pre-Project	Post-Project	Project Impact
1-AI-C	Hilltop - McConnico 230 kV Griffith - Peacock 230 kV	Davis - McConnico 230 kV	1130/1243	1244	1696	100.1	136.5	36.4
1-AI-C	Griffith - Peacock 230 kV Hilltop - Peacock 230 kV	Davis - McConnico 230 kV	1130/1243	989	1436	80.0	115.6	35.6
1-AI-C	Davis - McConnico 230 kV Griffith - Peacock 230 kV	Hilltop - McConnico 230 kV	1130/1243	1249	1708	100.5	137.4	36.9
1-AI-C	Davis - McConnico 230 kV Griffith - Peacock 230 kV	Hilltop - Peacock 230 kV	1130/1243	997	1450	80.2	116.7	36.5
1-AI-C	Peacock 345/230 kV Xfmr Griffith - McConnico 230 kV	Hilltop - Peacock 230 kV	1130/1243	1017	1309	81.8	105.3	23.5
1-AI-C	Peacock 345/230 kV Xfmr Davis - McConnico 230 kV	Round Valley - Peacock 230 kV	816/897	1029	1532	114.6	170.7	56.1
1-AI-C	Peacock 345/230 kV Xfmr Davis - McConnico 230 kV	Round Valley - Prescott 230 kV	816/897	999	1495	111.3	167.3	56.0
3-AI-max-C	Griffith - Peacock 230 kV Hilltop - Peacock 230 kV	Davis - McConnico 230 kV	1130/1243	1023	1444	82.3	116.2	33.9
3-AI-max-C	Davis - McConnico 230 kV Griffith - Peacock 230 kV	Hilltop - McConnico 230 kV	1130/1243	1280	1714	103.0	137.9	35.0
3-AI-max-C	Davis - McConnico 230 kV Griffith - Peacock 230 kV	Hilltop - Peacock 230 kV	1130/1243	1027	1460	82.7	117.5	34.8
3-AI-max-C	Peacock 345/230 kV Xfmr Davis - McConnico 230 kV	Round Valley - Peacock 230 kV	816/897	1067	1763	118.8	**196.4***	77.6
3-AI-max-C	Peacock 345/230 kV Xfmr Davis - McConnico 230 kV	Round Valley - Prescott 230 kV	816/897	1037	1720	115.5	**192.7***	77.2

*Required a synchronous condenser for a solution. This contingency results in a voltage collapse in the local area.

Table A-4. 2008 Heavy Summer – Liberty PST By-Passed – NAEP Generation serving regional load growth.

Case	CONTINGENCY	AFFECTED ELEMENT	Norm/Emer Rating (Amps)	Pre-Project Loading (Amps)	Post-Project Loading (Amps)	Percent of Emergency Rating		
						Pre-Project	Post-Project	Project Impact
2-LD-C	Hilltop - McConnico 230 kV Griffith - Peacock 230 kV	Davis - McConnico 230 kV	1130/1243	1244	1696	100.1	136.5	36.4
2-LD-C	Griffith - Peacock 230 kV Hilltop - Peacock 230 kV	Davis - McConnico 230 kV	1130/1243	989	1350	80.0	108.6	28.6
2-LD-C	Davis - McConnico 230 kV Griffith - Peacock 230 kV	Hilltop - McConnico 230 kV	1130/1243	1249	1705	100.5	137.2	36.7
2-LD-C	Davis - McConnico 230 kV Griffith - Peacock 230 kV	Hilltop - Peacock 230 kV	1130/1243	997	1361	80.2	109.6	29.3
2-LD-C	Peacock 345/230 kV Xfmr Griffith - McConnico 230 kV	Hilltop - Peacock 230 kV	1130/1243	1017	1342	81.8	108.0	26.2
2-LD-C	Peacock 345/230 kV Xfmr Davis - McConnico 230 kV	Prescott - Yavapai 230 kV	670/811	536	937	66.1	115.6	49.5
2-LD-C	Peacock 345/230 kV Xfmr Davis - McConnico 230 kV	Round Valley - Peacock 230 kV	816/897	1029	1567	114.6	174.6	60.0
2-LD-C	Peacock 345/230 kV Xfmr Davis - McConnico 230 kV	Round Valley - Prescott 230 kV	816/897	999	1533	111.3	170.9	59.5
4-LD-max-C	Hilltop - McConnico 230 kV Griffith - Peacock 230 kV	Davis - McConnico 230 kV	1130/1243	1276	1707	102.7	137.4	34.6
4-LD-max-C	Griffith - Peacock 230 kV Hilltop - Peacock 230 kV	Davis - McConnico 230 kV	1130/1243	1023	1357	82.3	109.2	26.8
4-LD-max-C	Davis - McConnico 230 kV Griffith - Peacock 230 kV	Hilltop - McConnico 230 kV	1130/1243	1280	1710	103.0	137.7	34.7
4-LD-max-C	Davis - McConnico 230 kV Griffith - Peacock 230 kV	Hilltop - Peacock 230 kV	1130/1243	1027	1371	82.7	110.3	27.7
4-LD-max-C	Peacock 345/230 kV Xfmr Griffith - McConnico 230 kV	Hilltop - Peacock 230 kV	1130/1243	946	1259	76.2	101.3	25.1
4-LD-max-C	Peacock 345/230 kV Xfmr Davis - McConnico 230 kV	Prescott - Yavapai 230 kV	670/811	574	907	70.8	111.8	41.0
4-LD-max-C	Peacock 345/230 kV Xfmr Davis - McConnico 230 kV	Round Valley - Peacock 230 kV	816/897	1067	1528	118.8	170.3	51.4
4-LD-max-C	Peacock 345/230 kV Xfmr Davis - McConnico 230 kV	Round Valley - Prescott 230 kV	816/897	1037	1496	115.5	166.7	51.2

Table A-5. 2008 Heavy Summer – Post-Transient Voltage Deviations – NAEP Generation displaces generation in Nevada.

			Voltage Deviation		
Case	**Contingency**	**Affected Bus**	**Pre-Project**	**Liberty PST In-Service Post-Project**	**Liberty PST By-Passed Post-Project**
1-AI	Hassayampa-N.Gila 500 kV	KOFA 161.0	5.6	5.8	5.7
3-AI-max	Hassayampa-N.Gila 500 kV	KOFA 161.0	8.2	8.4	8.4
		WLTNMOHK 161.0	7.6	7.7	7.7
		DOME TAP 161.0	7.6	7.8	7.7
		GILA 161.0	7.4	7.5	7.5
		KNOB 161.0	6.0	6.1	6.1
		GILA 69.0	5.8	6.0	5.9
		GOLDMNTP 161.0	5.8	5.9	5.9
		ARABY 69.0	5.6	5.8	5.7
		NGILATAP 69.0	5.6	5.8	5.7
		SONORA 69.0	5.6	5.7	5.6
		SONORA 34.5	5.4	5.5	5.4
		YUCCA161 161.0	5.2	5.3	5.3
		PILOTKNB 161.0	5.2	5.3	5.3
		YUCCGT21 13.8	5.2	5.3	5.3
		FOOTHILS 69.0	5.1	5.2	5.2
		PKNOBD2 100.0	5.1	5.2	5.2
		PILOTKN2 13.8	5.1	5.2	5.1
1-AI	Peacock 345/230 kV Tran & Davis-McConnico 230 kV	ROUNDVLY 230.0	8.0	Diverged	Diverged
		BAGDAD 115.0	6.4	Diverged	Diverged
		PEACOCK 230.0	5.2	Diverged	Diverged
		PRESCOTT 115.0	5.1	Diverged	Diverged
3-AI-max	Peacock 345/230 kV Tran & Davis-McConnico 230 kV	ROUNDVLY 230.0	8.6	Diverged	Diverged
		BAGDAD 115.0	6.8	Diverged	Diverged
		PEACOCK 230.0	5.6	Diverged	Diverged
		PRESCOTT 115.0	5.4	Diverged	Diverged
		PRESCOT2 100.0	5.3	Diverged	Diverged
		PRESCOT1 100.0	5.3	Diverged	Diverged
		PRESCOTT 230.0	5.2	Diverged	Diverged

Table A-6. 2008 Heavy Summer – Post-Transient Voltage Deviations – NAEP Generation serving regional load growth.

			Voltage Deviation		
Case	**Contingency**	**Affected Bus**	**Pre-Project**	**Liberty PST In-Service Post-Project**	**Liberty PST By-Passed Post-Project**
2-LD	Hassayampa-N.Gila 500 kV	KOFA 161	5.6	5.7	
4-LD-max	Hassayampa-N.Gila 500 kV	ARABY 69.0	5.6	5.6	5.6
		DOME TAP 161.0	7.6	7.6	7.6
		FOOTHILS 69.0	5.1	5.1	5
		GILA 69.0	5.8	5.8	5.8
		GILA 161.0	7.4	7.4	7.3
		GOLDMNTP 161.0	5.8	5.7	5.8
		KNOB 161.0	6.0	6.0	6
		KOFA 161.0	8.2	8.2	8.2
		NGILATAP 69.0	5.6	5.6	5.6
		PILOTKN2 13.8	5.1	5.1	5.1
		PILOTKNB 161.0	5.2	5.2	5.2
		PKNOBD2 100.0	5.1	5.1	5.1
		SONORA 34.5	5.4	5.4	5.3
		SONORA 69.0	5.6	5.5	5.5
		WLTNMOHK 161.0	7.6	7.6	7.6
		YUCCA161 161.0	5.2	5.2	5.2
		YUCCGT21 13.8	5.2	5.2	5.2
2-LD	Peacock 345/230 kV Tran & Davis-McConnico 230 kV	BAGDAD 115.0	6.4	15.6	16.0
		HILLTOP 230.0	NA	7.3	7.1
		MCCONICO 230.0	NA	5.8	5.6
		PEACOCK 230.0	5.2	10.5	10.4
		PRESCOT1 100.0	NA	11.9	12.2
		PRESCOT2 100.0	NA	11.9	12.2
		PRESCOTT 115.0	5.1	12.1	12.5
		PRESCOTT 230.0	NA	11.6	11.9
		ROUNDVLY 230.0	8.0	18.1	18.1
		VERDE 230.0	NA	5.2	5.8
		YAVAPAI 230.0	NA	6.0	6.4

Table A-6. (continued) 2008 Heavy Summer – Post-Transient Voltage Deviations – NAEP Generation serving regional load growth.

Case	Contingency	Affected Bus	Voltage Deviation		
			Pre-Project	Liberty PST In-Service Post-Project	Liberty PST By-Passed Post-Project
4-LD-max	Peacock 345/230 kV Tran & Davis-McConnico 230 kV	BAGDAD 115.0	6.8	14.2	Diverged
		PEACOCK 230.0	5.6	6.7	Diverged
		PRESCOT1 100.0	5.3	10.8	Diverged
		PRESCOT2 100.0	5.3	10.8	Diverged
		PRESCOTT 115.0	5.4	11.1	Diverged
		PRESCOTT 230.0	5.2	10.6	Diverged
		ROUNDVLY 230.0	8.6	14.4	Diverged
		VERDE 230.0	NA	5.2	
		YAVAPAI 230.0	NA	5.7	

Appendix B

Power Flow Plots

Northern Arizona Energy Project SIS Power Flow Plots

Plot	Description
	Liberty Phase-Shift Transformer In-Service at 450 MW (south to north)
Plot #1	2008 Heavy Autumn – Normal Conditions - Before Project, Minimum WAPA Generation (MW/%)
Plot #2	2008 Heavy Autumn – Normal Conditions - After Project – Minimum WAPA Gen, NAEP displaces Nevada Generation (AI) (MW/%)
Plot #3	2008 Heavy Autumn – Normal Conditions - After Project – Minimum WAPA Gen, NAEP serves regional Load (LD) (MW/%)
Plot #4	2008 Heavy Autumn – Normal Conditions - Before Project, Maximum WAPA Generation (MW/%)
Plot #5	2008 Heavy Autumn – Normal Conditions - After Project – Maximum WAPA Gen, NAEP displaces Nevada Generation (max AI) (MW/%)
Plot #6	2008 Heavy Autumn – Normal Conditions - After Project – Maximum WAPA Gen, NAEP serves regional Load (max LD) (MW/%)
	CONTINGENCIES
Plot #7	2008 Heavy Autumn – Emergency Conditions - Before Project, min WAPA Gen: Loss of Peacock-Mead 345kV (MW/%)
Plot #8	2008 Heavy Autumn – Emergency Conditions - After Project, min WAPA Gen - AI: Loss of Peacock-Mead 345kV (MW/%)
Plot #9	2008 Heavy Autumn – Emergency Conditions - After Project, min WAPA Gen – LD: Loss of Peacock-Mead 345kV (MW/%)
Plot #10	2008 Heavy Autumn – Emergency Conditions - Before Project, min WAPA Gen: Loss of Griffith-Peacock 230kV and Davis-Mc Connico 230 kV (MW/%)
Plot #11	2008 Heavy Autumn – Emergency Conditions - After Project, min WAPA Gen - AI: Loss of Griffith-Peacock 230kV and Davis-Mc Connico 230 kV (MW/%)
Plot #12	2008 Heavy Autumn – Emergency Conditions - After Project, min WAPA Gen – LD: Loss of Griffith-Peacock 230kV and Davis-Mc Connico 230 kV (MW/%)
Plot #13	2008 Heavy Autumn – Emergency Conditions - Before Project, min WAPA Gen: Loss of Griffith-Peacock 230kV and Hilltop-Mc Connico 230 kV (MW/%)
Plot #14	2008 Heavy Autumn – Emergency Conditions - After Project, min WAPA Gen - AI: Loss of Griffith-Peacock 230kV and Hilltop-Mc Connico 230 kV (MW/%)
Plot #15	2008 Heavy Autumn – Emergency Conditions - After Project, min WAPA Gen – LD: Loss of Griffith-Peacock 230kV and Hilltop-Mc Connico 230 kV (MW/%)
Plot #16	2008 Heavy Autumn – Emergency Conditions - Before Project, min WAPA Gen: Loss of Peacock 345/230kV Tran and Davis-Mc Connico 230 kV (MW/%)
Plot #17	2008 Heavy Autumn – Emergency Conditions - After Project, min WAPA Gen - AI: Loss of Peacock 345/230kV Tran and Davis-Mc Connico 230 kV (MW/%)
Plot #18	2008 Heavy Autumn – Emergency Conditions - After Project, min WAPA Gen-LD: Loss of Peacock 345/230kV Tran and Davis-Mc Connico 230 kV (MW/%)
Plot #19	2008 Heavy Autumn – Emergency Conditions - Before Project, max WAPA Gen: Loss of Peacock-Mead 345kV (MW/%)
Plot #20	2008 Heavy Autumn – Emergency Conditions - After Project, max WAPA Gen - AI: Loss of Peacock-Mead 345kV (MW/%)

Plot #21	2008 Heavy Autumn – Emergency Conditions - After Project, max WAPA Gen – LD: Loss of Peacock-Mead 345kV (MW/%)
Plot #22	2008 Heavy Autumn – Emergency Conditions - Before Project, max WAPA Gen: Loss of Griffith-Peacock 230kV and Davis-Mc Connico 230 kV (MW/%)
Plot #23	2008 Heavy Autumn – Emergency Conditions - After Project, max WAPA Gen - AI: Loss of Griffith-Peacock 230kV and Davis-Mc Connico 230 kV (MW/%)
Plot #24	2008 Heavy Autumn – Emergency Conditions - After Project, max WAPA Gen – LD: Loss of Griffith-Peacock 230kV and Davis-Mc Connico 230 kV (MW/%)
Plot #25	2008 Heavy Autumn – Emergency Conditions - Before Project, max WAPA Gen: Loss of Griffith-Peacock 230kV and Hilltop-Mc Connico 230 kV (MW/%)
Plot #26	2008 Heavy Autumn – Emergency Conditions - After Project, max WAPA Gen - AI: Loss of Griffith-Peacock 230kV and Hilltop-Mc Connico 230 kV (MW/%)
Plot #27	2008 Heavy Autumn – Emergency Conditions - After Project, max WAPA Gen – LD: Loss of Griffith-Peacock 230kV and Hilltop-Mc Connico 230 kV (MW/%)
Plot #28	2008 Heavy Autumn – Emergency Conditions - Before Project, max WAPA Gen: Loss of Peacock 345/230kV Tran and Davis-Mc Connico 230 kV (MW/%)
Plot #29	2008 Heavy Autumn – Emergency Conditions - After Project, max WAPA Gen-AI: Loss of Peacock 345/230kV Tran and Davis-Mc Connico 230 kV (MW/%)
Plot #30	2008 Heavy Autumn – Emergency Conditions - After Project, max WAPA Gen-LD: Loss of Peacock 345/230kV Tran and Davis-Mc Connico 230 kV (MW/%)
	Liberty Phase-Shift Transformer By-Passed
Plot #31	2008 Heavy Autumn – Normal Conditions - Before Project, Minimum WAPA Generation (MW/%)
Plot #32	2008 Heavy Autumn – Normal Conditions - After Project – Minimum WAPA Gen, NAEP displaces Nevada Generation (AI) (MW/%)
Plot #33	2008 Heavy Autumn – Normal Conditions - After Project – Minimum WAPA Gen, NAEP serves regional Load (LD) (MW/%)
Plot #34	2008 Heavy Autumn – Normal Conditions - Before Project, Maximum WAPA Generation (MW/%)
Plot #35	2008 Heavy Autumn – Normal Conditions - After Project – Maximum WAPA Gen, NAEP displaces Nevada Generation (max AI) (MW/%)
Plot #36	2008 Heavy Autumn – Normal Conditions - After Project – Maximum WAPA Gen, NAEP serves regional Load (max LD) (MW/%)
	CONTINGENCIES
Plot #37	2008 Heavy Autumn – Emergency Conditions - Before Project, min WAPA Gen: Loss of Griffith-Peacock 230kV and Davis-Mc Connico 230 kV (MW/%)
Plot #38	2008 Heavy Autumn – Emergency Conditions - After Project, min WAPA Gen - AI: Loss of Griffith-Peacock 230kV and Davis-Mc Connico 230 kV (MW/%)
Plot #39	2008 Heavy Autumn – Emergency Conditions - After Project, min WAPA Gen – LD: Loss of Griffith-Peacock 230kV and Davis-Mc Connico 230 kV (MW/%)
Plot #40	2008 Heavy Autumn – Emergency Conditions - Before Project, min WAPA Gen: Loss of Griffith-Peacock 230kV and Hilltop-Mc Connico 230 kV (MW/%)
Plot #41	2008 Heavy Autumn – Emergency Conditions - After Project, min WAPA Gen - AI: Loss of Griffith-Peacock 230kV and Hilltop-Mc Connico 230 kV (MW/%)
Plot #42	2008 Heavy Autumn – Emergency Conditions - After Project, min WAPA Gen – LD: Loss of Griffith-Peacock 230kV and Hilltop-Mc Connico 230 kV (MW/%)

Plot #43	2008 Heavy Autumn – Emergency Conditions - Before Project, min WAPA Gen: Loss of Peacock 345/230kV Tran and Davis-Mc Connico 230 kV (MW/%)
Plot #44	2008 Heavy Autumn – Emergency Conditions - After Project, min WAPA Gen - Al: Loss of Peacock 345/230kV Tran and Davis-Mc Connico 230 kV (MW/%)
Plot #45	2008 Heavy Autumn – Emergency Conditions - After Project, min WAPA Gen-LD: Loss of Peacock 345/230kV Tran and Davis-Mc Connico 230 kV (MW/%)
Plot #46	2008 Heavy Autumn – Emergency Conditions - Before Project, max WAPA Gen: Loss of Griffith-Peacock 230kV and Davis-Mc Connico 230 kV (MW/%)
Plot #47	2008 Heavy Autumn – Emergency Conditions - After Project, max WAPA Gen - Al: Loss of Griffith-Peacock 230kV and Davis-Mc Connico 230 kV (MW/%)
Plot #48	2008 Heavy Autumn – Emergency Conditions - After Project, max WAPA Gen – LD: Loss of Griffith-Peacock 230kV and Davis-Mc Connico 230 kV (MW/%)
Plot #49	2008 Heavy Autumn – Emergency Conditions - Before Project, max WAPA Gen: Loss of Griffith-Peacock 230kV and Hilltop-Mc Connico 230 kV (MW/%)
Plot #50	2008 Heavy Autumn – Emergency Conditions - After Project, max WAPA Gen - Al: Loss of Griffith-Peacock 230kV and Hilltop-Mc Connico 230 kV (MW/%)
Plot #51	2008 Heavy Autumn – Emergency Conditions - After Project, max WAPA Gen – LD: Loss of Griffith-Peacock 230kV and Hilltop-Mc Connico 230 kV (MW/%)
Plot #52	2008 Heavy Autumn – Emergency Conditions - Before Project, max WAPA Gen: Loss of Peacock 345/230kV Tran and Davis-Mc Connico 230 kV (MW/%)
Plot #53	2008 Heavy Autumn – Emergency Conditions - After Project, max WAPA Gen-Al: Loss of Peacock 345/230kV Tran and Davis-Mc Connico 230 kV (MW/%)
Plot #54	2008 Heavy Autumn – Emergency Conditions - After Project, max WAPA Gen-LD: Loss of Peacock 345/230kV Tran and Davis-Mc Connico 230 kV (MW/%)

Note: Initially the project was called Arroyo Energy Project; however, the name was changed to Northern Arizona Energy Project or NAEP after studies were completed. Any references to the Arroyo Energy Project should be denoted as the Northern Arizona Energy Project.

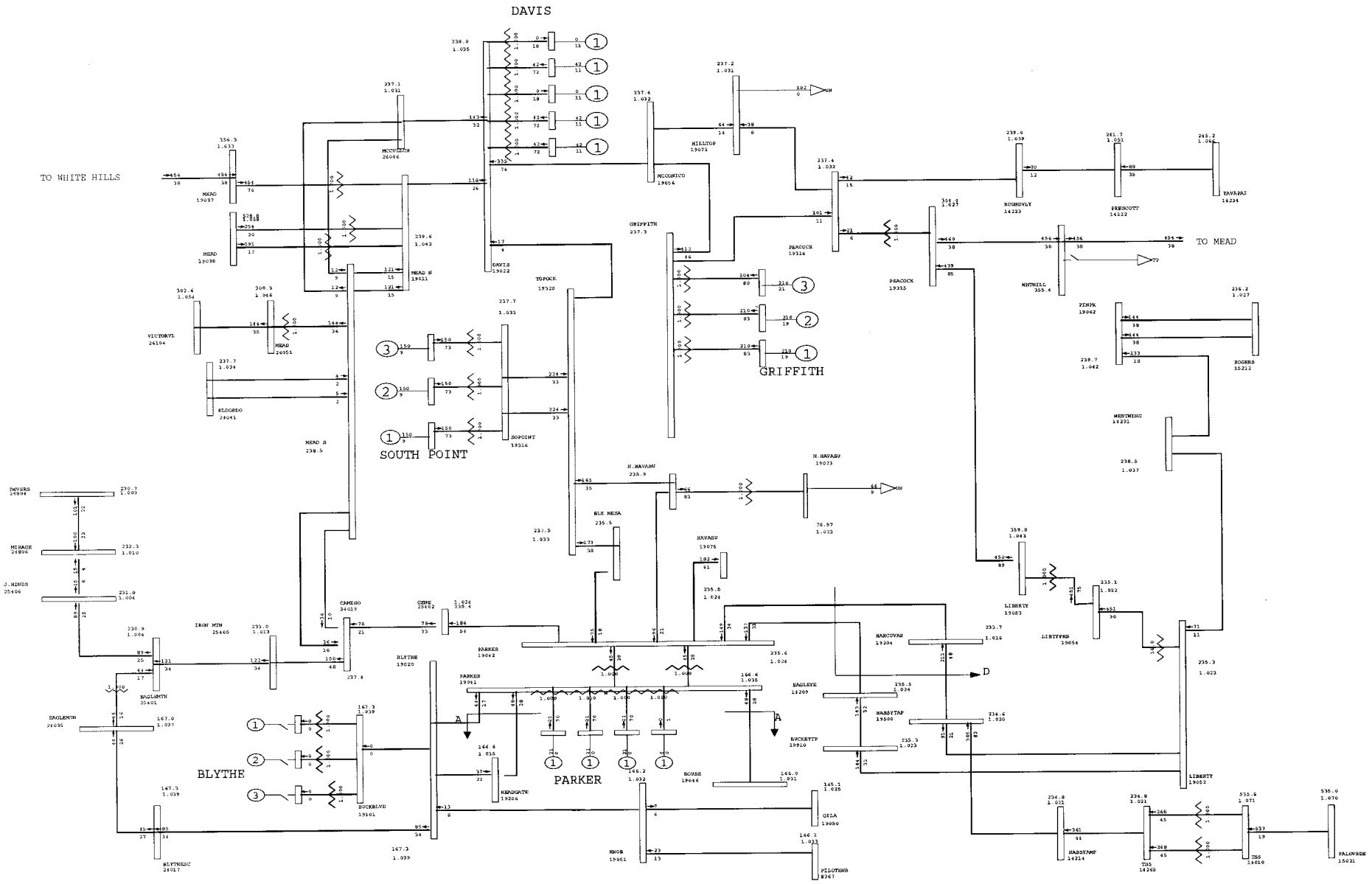

General Electric International, Inc. PSLF Program Thu Jul 19 15:17:16 2007 C:upslf16MyPSLF 8ha_pre-rev1.sav

	2008 HEAVY AUTUMN, NORTHERN ARIZONA ENERGY PROJECT, PRE-PROJECT CASE: 08ha_pre-rev1.sav EOR=9300MW, Min WAPA-DSW Generation Modeled.	Plot 1 - 2008 Heavy Autumn Normal Conditions - Before Project, Minimum WAPA Gen	MW/% rate C:upslf16MyPSLF iver2.dr Rating = 1

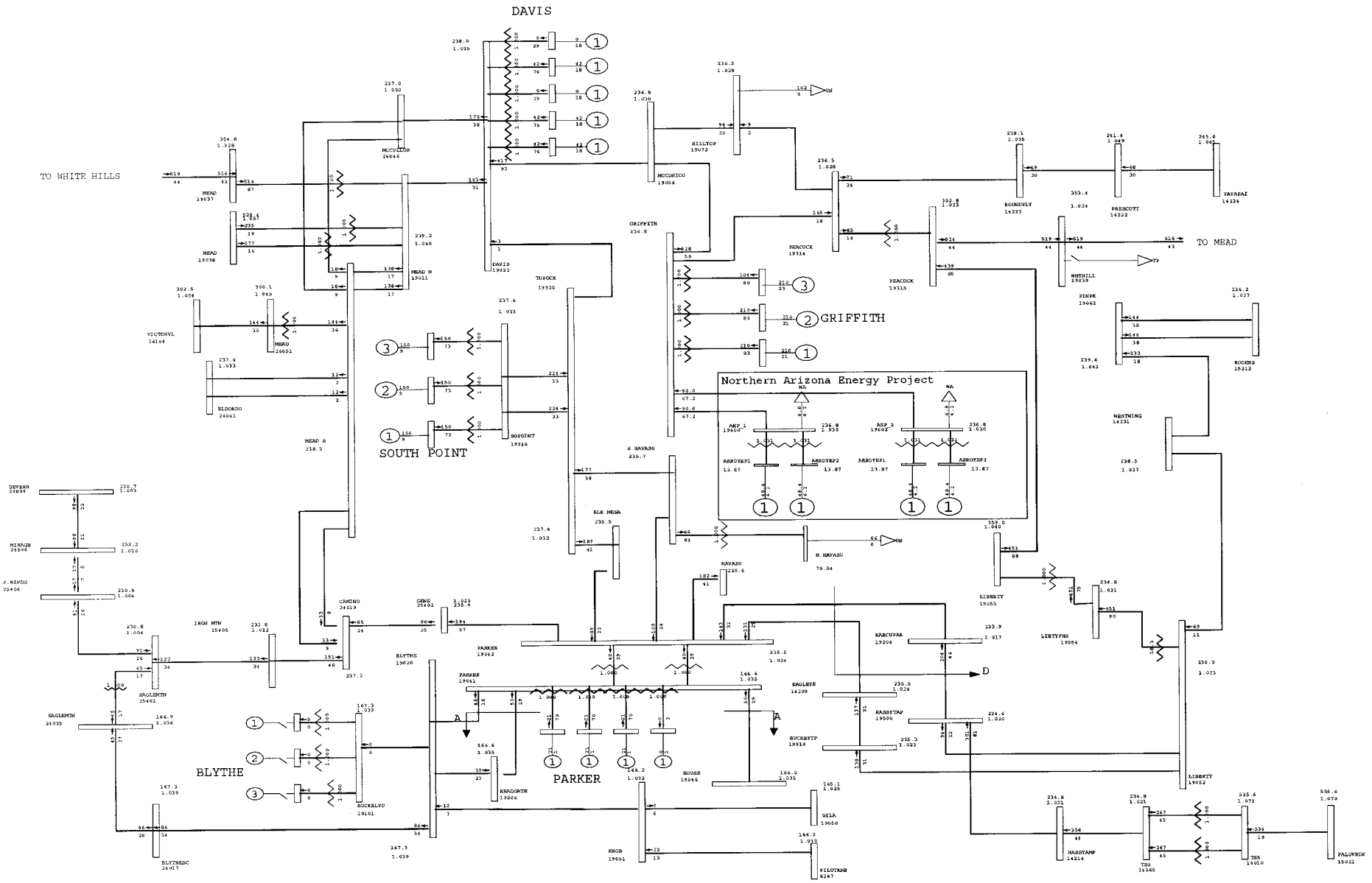

General Electric International, Inc. PSLF Program Thu Jul 19 15:17:18 2007 C:upslf16MyPSLF 8ha_pst_AI-rev1.sav

	2008 HEAVY AUTUMN, NORTHERN ARIZONA ENERGY PROJECT, POST-PROJECT - Area Interch	Plot 2 - 2008 Heavy Autumn Normal Conditions - After Project, Min WAPA Gen, Are	MW/% rate
	CASE: 08ha_pst_AI-rev1.sav		C:upslf16MyPSLF iver2-na
	EOR=9300MW, Minimum WAPA-DSW Generation Modeled.		Rating = 1

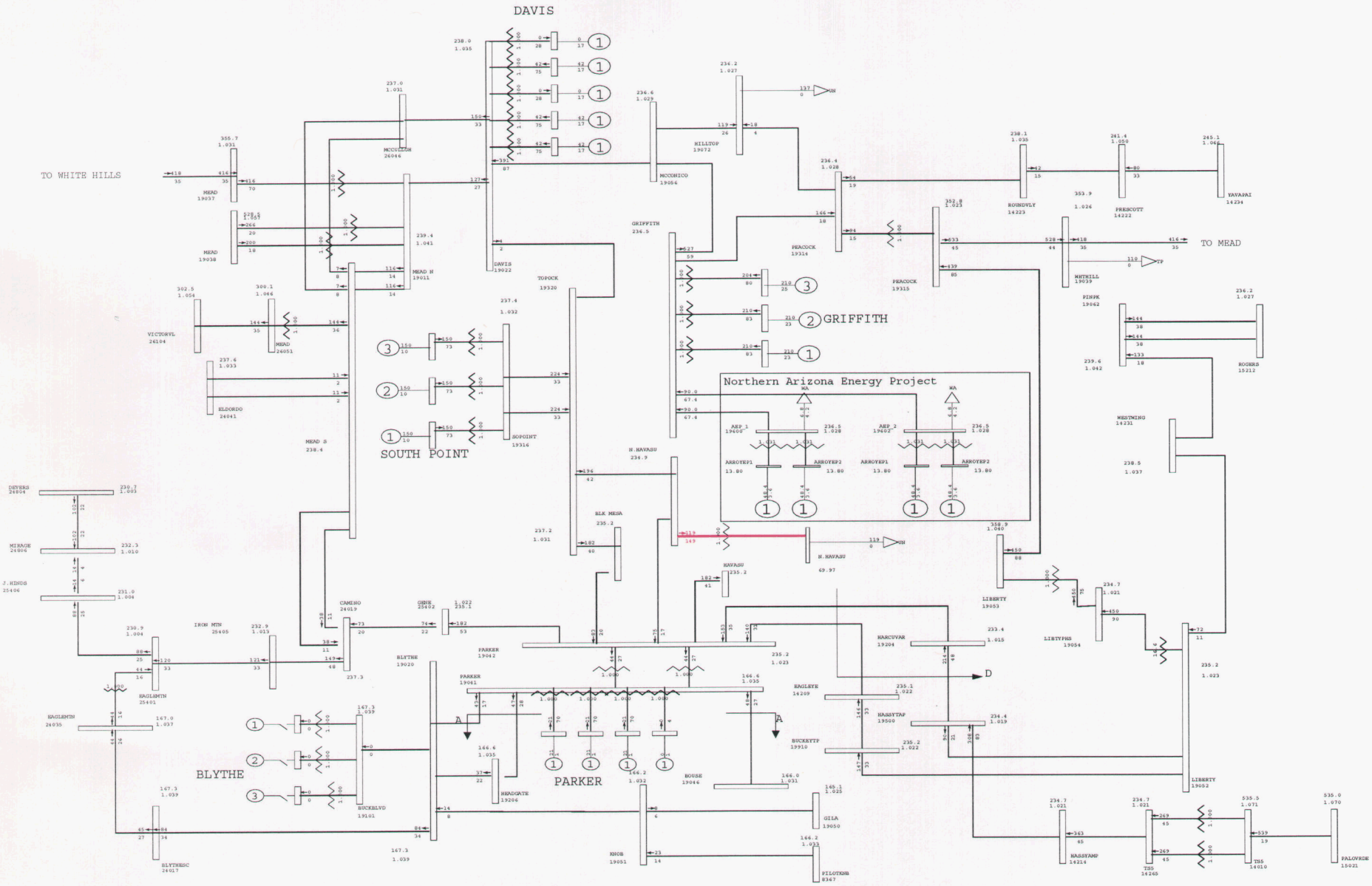

General Electric International, Inc. PSLF Program Thu Jul 19 15:17:20 2007 C:upslf16MyPSLF 8ha_pst_LD-rev1.sav

	2008 HEAVY AUTUMN, NORTHERN ARIZONA ENERGY PROJECT, POST-PROJECT - UNS Load Inc CASE: 08ha_pst_LD-rev1.sav EOR=9300MW, Minimum WAPA-DSW Generation Modeled.	Plot 3 - 2008 Heavy Autumn Normal Conditions - After Project, Min WAPA Gen, Loa	MW/% rate C:upslf16MyPSLF iver2-na Rating = 1

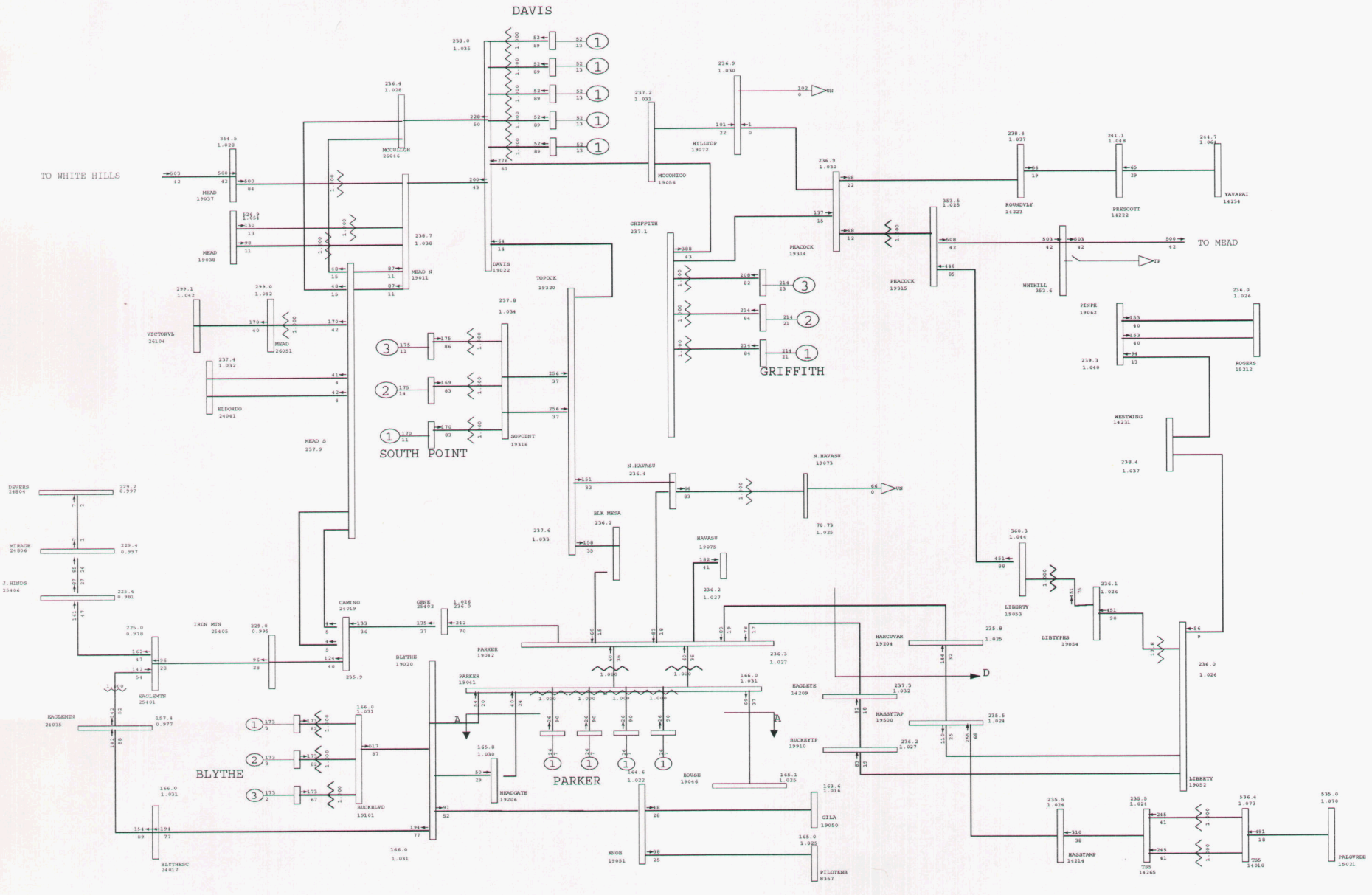

General Electric International, Inc. PSLF Program Thu Jul 19 15:17:22 2007 C:upslf16MyPSLF 8ha_pre_max-rev1.sav

	2008 HEAVY AUTUMN, NORTHERN ARIZONA ENERGY PROJECT, PRE-PROJECT CASE: 08ha_pre_max-rev1.sav EOR=9300MW, Maximum WAPA-DSW Generation Modeled.	Plot 4 - 2008 Heavy Autumn Normal Conditions - Before Project, Maximum Gen	MW/% rate C:upslf16MyPSLF iver2.dr Rating = 1

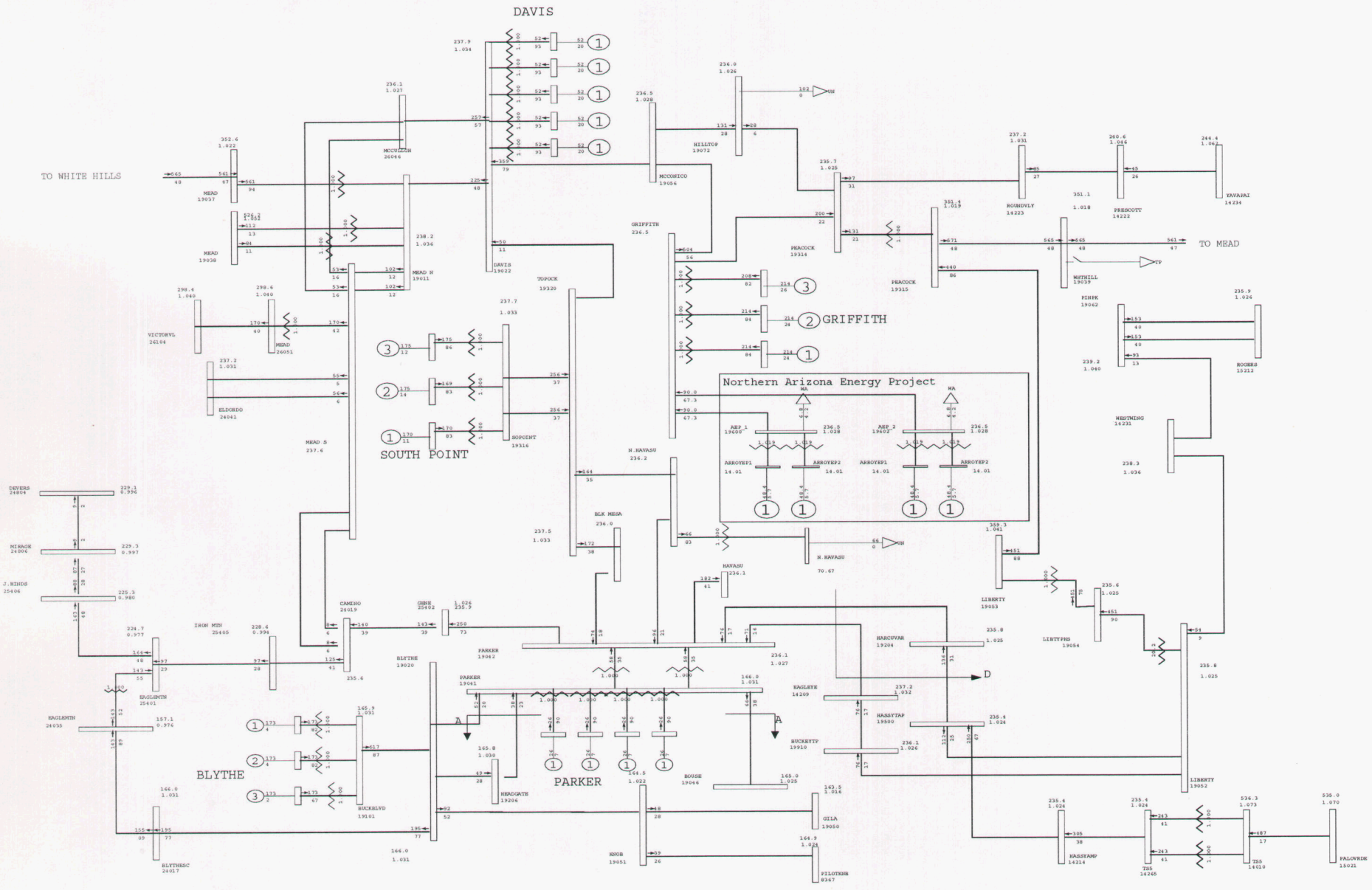

General Electric International, Inc. PSLF Program Thu Jul 19 15:17:24 2007 C:upslf16MyPSLF 8ha_pst_maxAI-rev1.sav

	2008 HEAVY AUTUMN, NORTHERN ARIZONA ENERGY PROJECT, POST-PROJECT - Area Interch	Plot 5 - 2008 Heavy Autumn Normal Conditions - After Project, Max WAPA Gen, Are	MW/% rate
	CASE: 08ha_pst_maxAI-rev1.sav		C:upslf16MyPSLF iver2-na
	EOR=9300MW, Maximum WAPA-DSW Generation Modeled.		Rating = 1

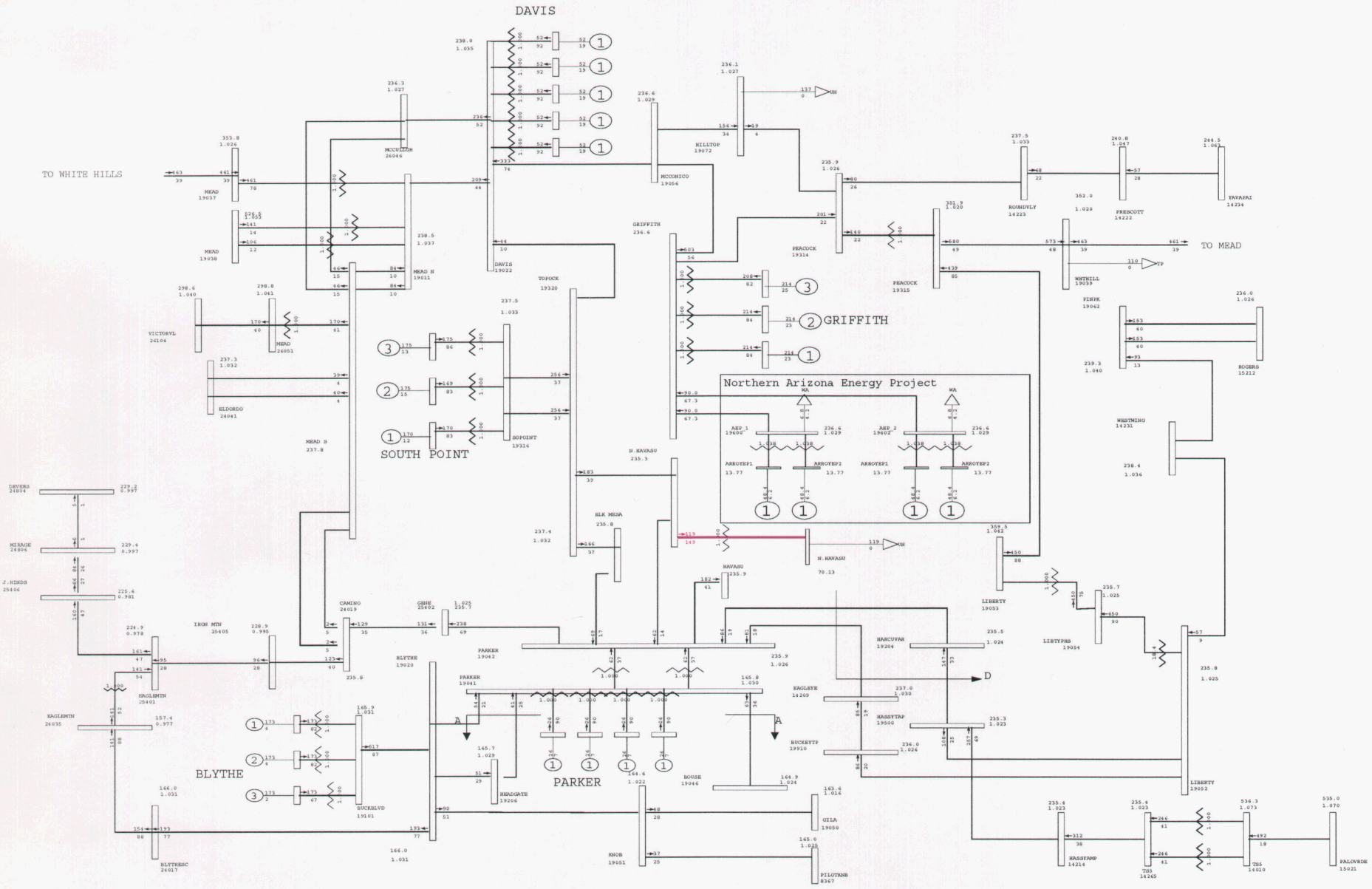

General Electric International, Inc. PSLF Program Thu Jul 19 15:17:26 2007 C:upslf16MyPSLF 8ha_pst_maxLD-rev1.sav

	2008 HEAVY AUTUMN, NORTHERN ARIZONA ENERGY PROJECT, POST-PROJECT - UNS Load Inc CASE: 08ha_pst_maxLD-rev1.sav EOR=9300MW, Maximum WAPA-DSW Generation Modeled.	Plot 6 - 2008 Heavy Autumn Normal Conditions - After Project, Max WAPA Gen, Loa	MW/% rate C:upslf16MyPSLF iver2-na Rating = 1

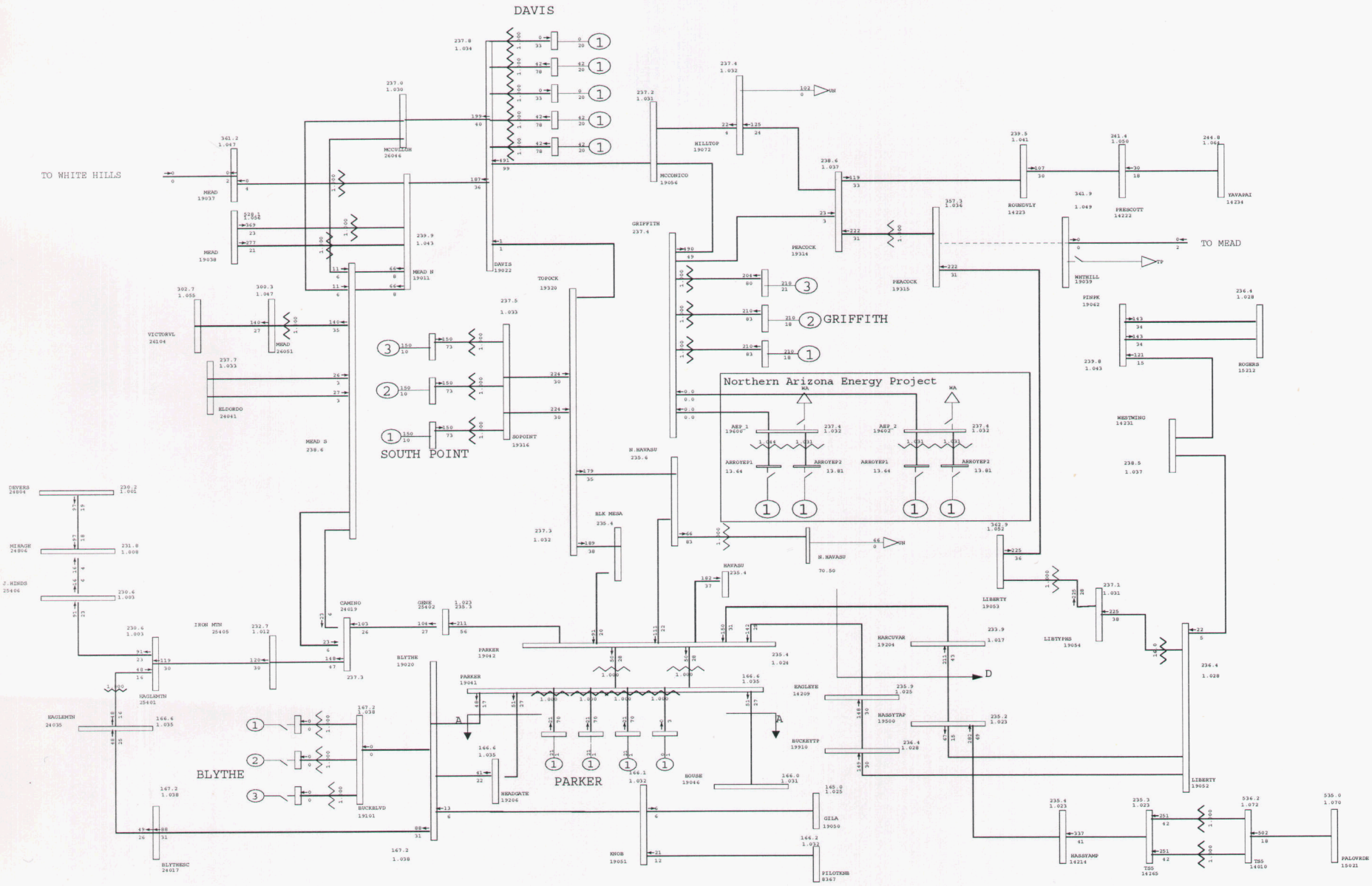

General Electric International, Inc. PSLF Program Thu Jul 19 15:17:28 2007 C:upslf16MyPSLF 8ha_pre-rev1.sav

	2008 HEAVY AUTUMN, NORTHERN ARIZONA ENERGY PROJECT, PRE-PROJECT	Plot 7 - 2008 Heavy Autumn - Before Project, min WAPA Gen	MW/% rate
	CASE: 08ha_pre-rev1.sav	Outage: Peacock-Mead 345kV Line	C:upslf16MyPSLF iver2-na
	EOR=9300MW, Min WAPA-DSW Generation Modeled.		Rating = 2

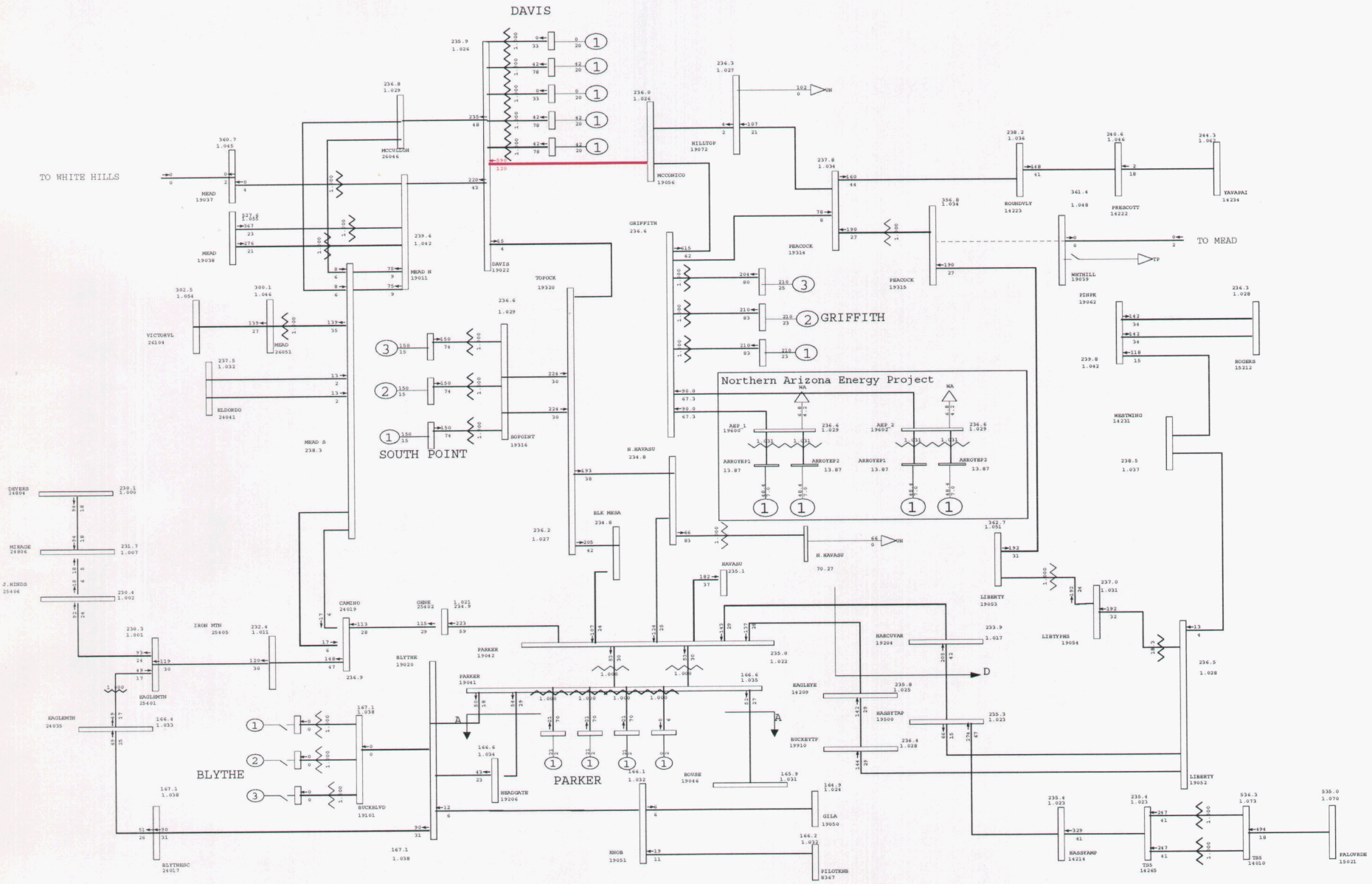

General Electric International, Inc. PSLF Program Thu Jul 19 15:17:30 2007 C:upslf16MyPSLF 8ha_pst_AI-rev1.sav

	2008 HEAVY AUTUMN, NORTHERN ARIZONA ENERGY PROJECT, POST-PROJECT - Area Interch	Plot 8 - 2008 Heavy Autumn - After Project, min WAPA Gen, Area Interchange	MW/% rate
	CASE: 08ha_pst_AI-rev1.sav	Outage: Peacock-Mead 345kV Line	C:upslf16MyPSLF iver2-na
	EOR=9300MW, Minimum WAPA-DSW Generation Modeled.		Rating = 2

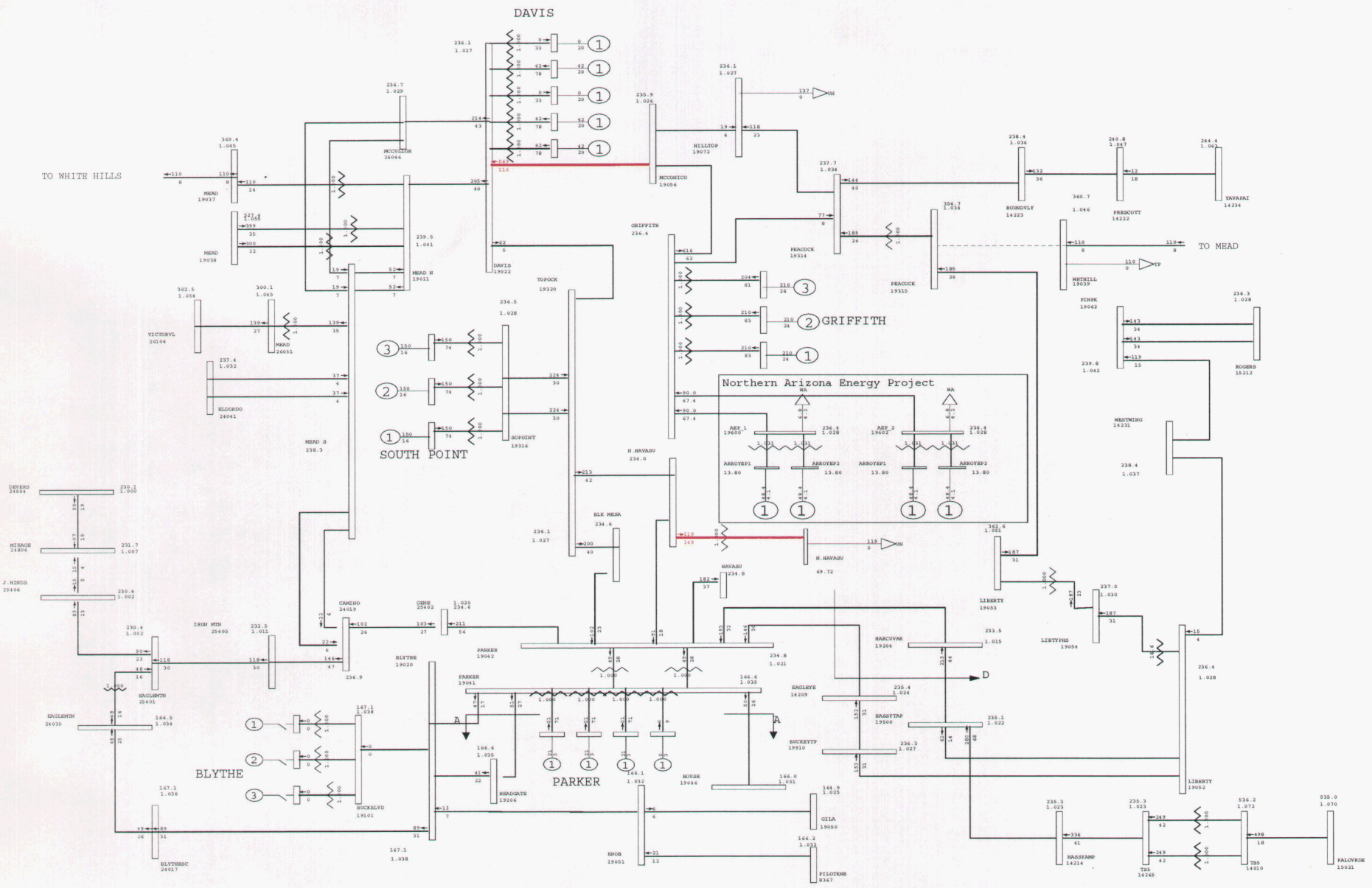

General Electric International, Inc. PSLF Program Thu Jul 19 15:17:32 2007 C:upslf16MyPSLF 8ha_pst_LD-rev1.sav

	2008 HEAVY AUTUMN, NORTHERN ARIZONA ENERGY PROJECT, POST-PROJECT - UNS Load Inc CASE: 08ha_pst_LD-rev1.sav EOR=9300MW, Minimum WAPA-DSW Generation Modeled.	Plot 9 - 2008 Heavy Autumn - After Project, min WAPA Gen, Regional Load Outage: Peacock-Mead 345kV Line	MW/% rate C:upslf16MyPSLF iver2-na Rating = 2

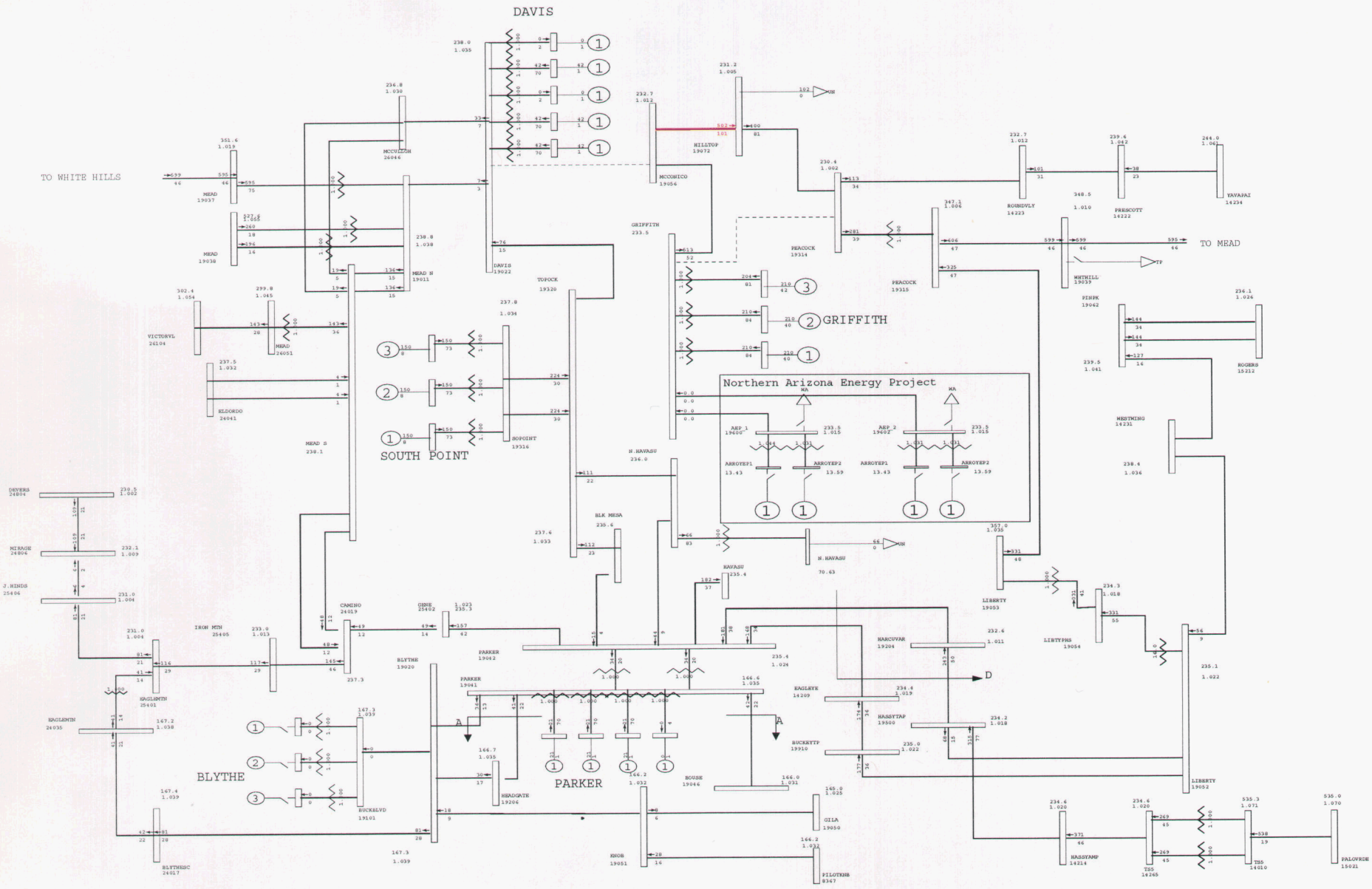

General Electric International, Inc. PSLF Program Thu Jul 19 15:17:34 2007 C:upslf16MyPSLF 8ha_pre-rev1.sav

	2008 HEAVY AUTUMN, NORTHERN ARIZONA ENERGY PROJECT, PRE-PROJECT CASE: 08ha_pre-rev1.sav EOR=9300MW, Min WAPA-DSW Generation Modeled.	Plot 10 - 2008 Heavy Autumn - Before Project, min WAPA Gen Outage: Griffith-Peacock & Davis-McConnico 230kV Lines	MW/% rate C:upslf16MyPSLF iver2-na Rating = 2

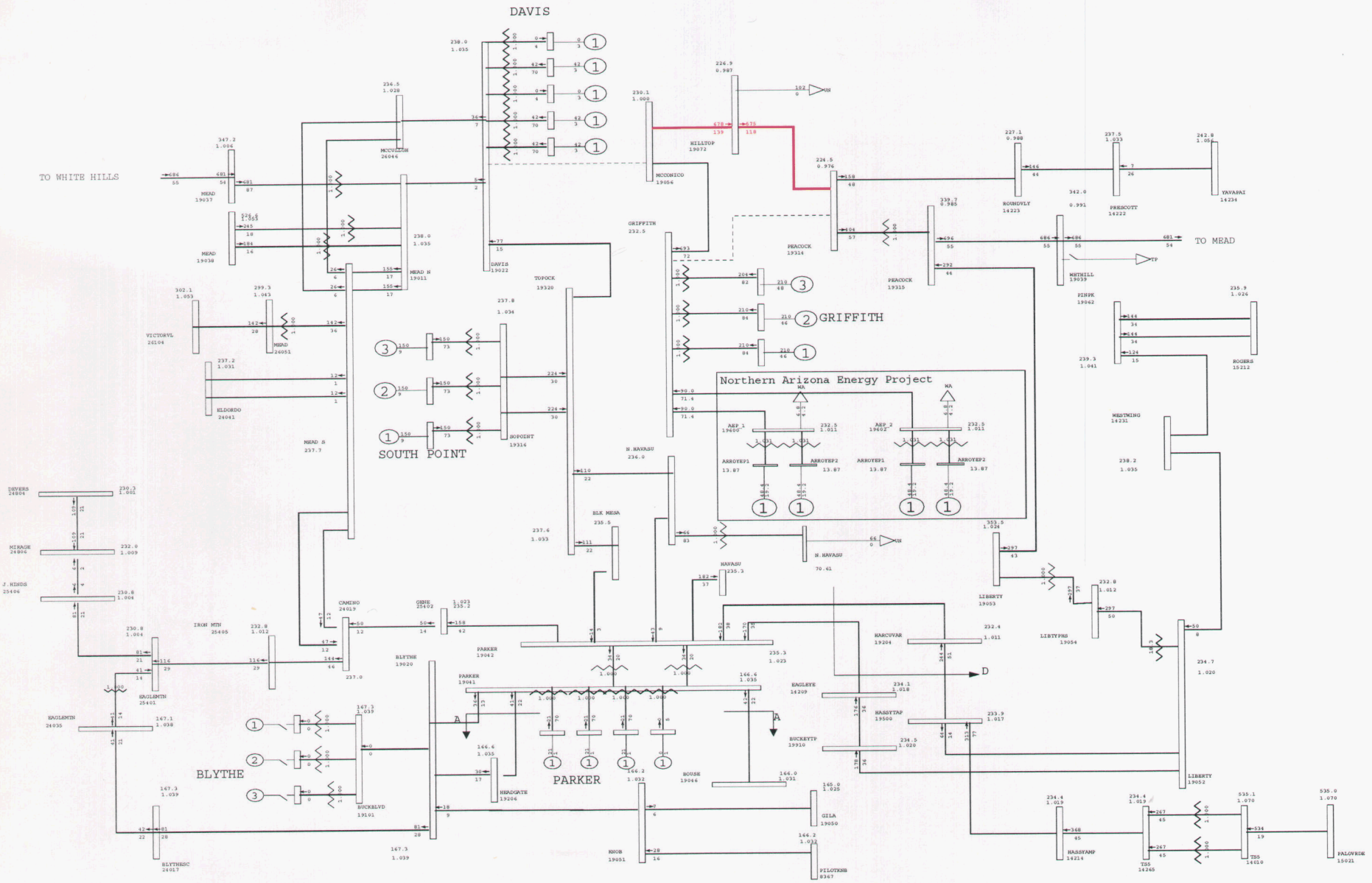

General Electric International, Inc. PSLF Program Thu Jul 19 15:17:38 2007 C:upslf16MyPSLF 8ha_pst_AI-rev1.sav

	2008 HEAVY AUTUMN, NORTHERN ARIZONA ENERGY PROJECT, POST-PROJECT - Area Interch	Plot 11 - 2008 Heavy Autumn - After Project, min WAPA Gen, Area Interchange	MW/% rate
	CASE: 08ha_pst_AI-rev1.sav	Outage: Griffith-Peacock & Davis-McConnico 230kV Lines	C:upslf16MyPSLF iver2-na
	EOR=9300MW, Minimum WAPA-DSW Generation Modeled.		Rating = 2

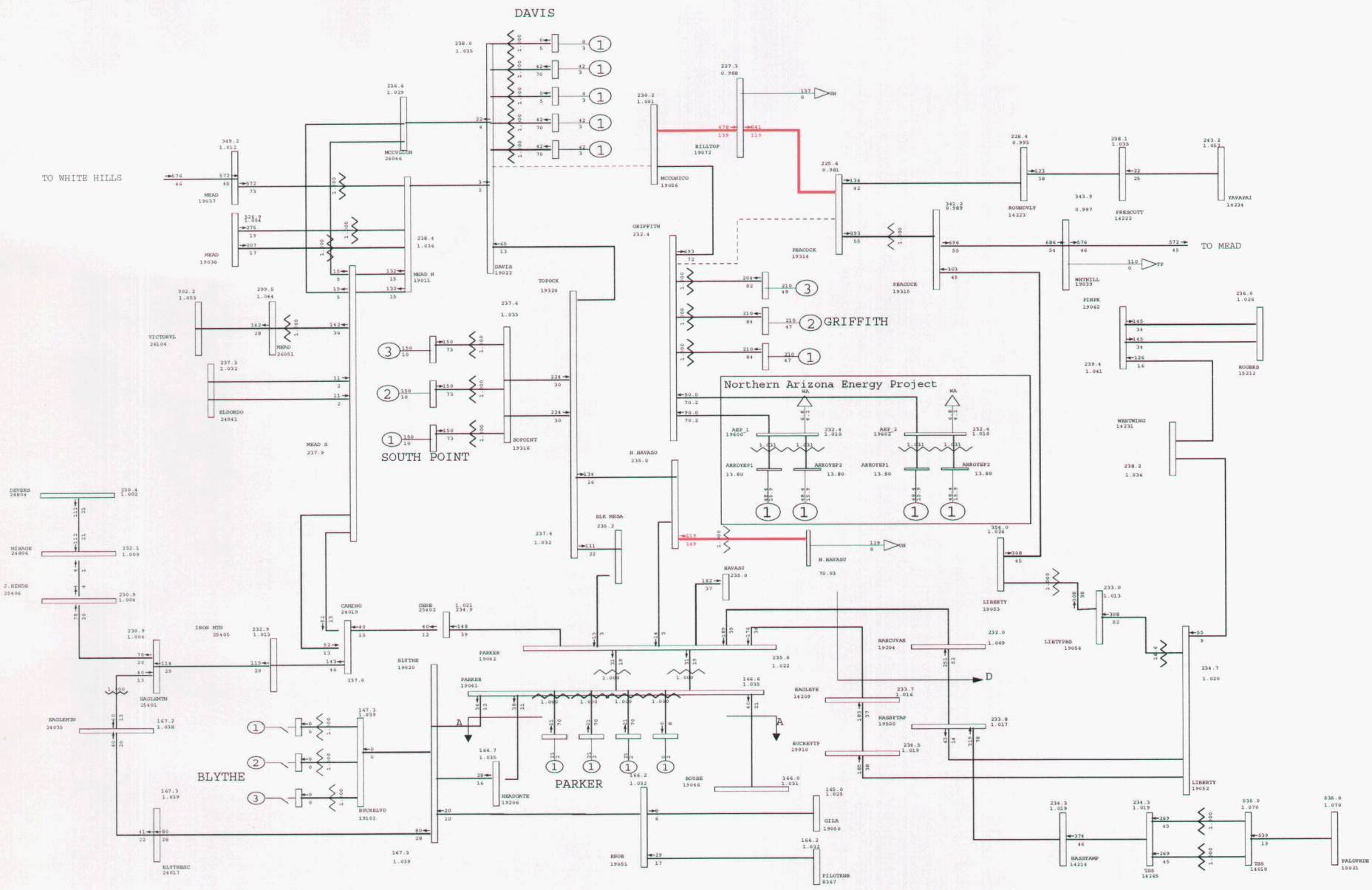

General Electric International, Inc. PSLF Program Thu Jul 19 15:17:41 2007 C:upslf16MyPSLF 8ha_pst_LD-rev1.sav

2008 HEAVY AUTUMN, NORTHERN ARIZONA ENERGY PROJECT, POST-PROJECT - UNS Load Inc CASE: 08ha_pst_LD-rev1.sav EOR=9300MW, Minimum WAPA-DSW Generation Modeled.	Plot 12 - 2008 Heavy Autumn - After Project, min WAPA Gen, Regional Load Outage: Griffith-Peacock & Davis-McConnico 230kV Lines	MW/% rate C:upslf16MyPSLF iver2-na Rating = 2

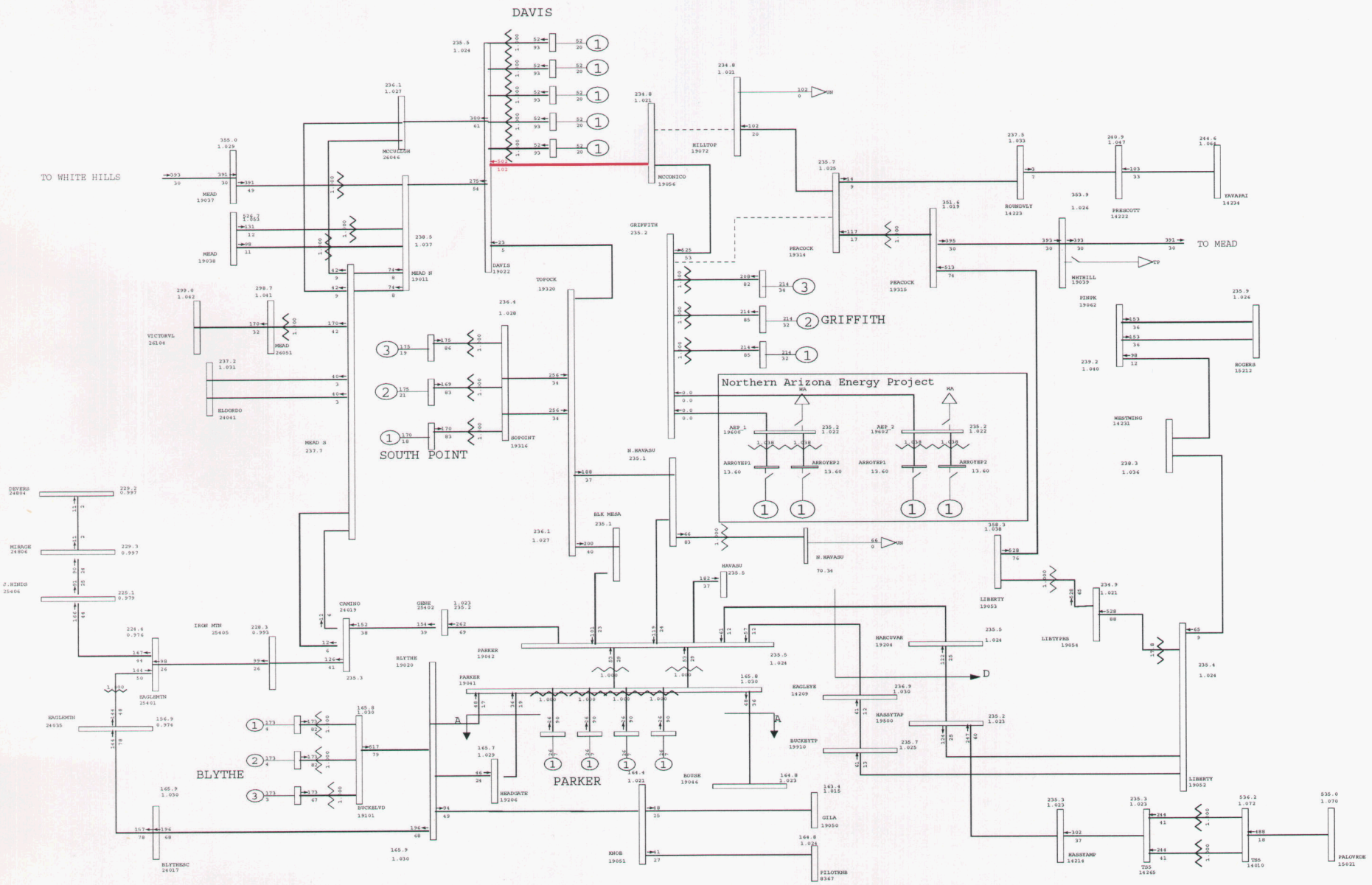

General Electric International, Inc. PSLF Program Thu Jul 19 15:26:59 2007 C:upslf16MyPSLF 8ha_pre_max-rev1.sav

2008 HEAVY AUTUMN, NORTHERN ARIZONA ENERGY PROJECT, PRE-PROJECT CASE: 08ha_pre_max-rev1.sav EOR=9300MW, Maximum WAPA-DSW Generation Modeled.	Plot 25 - 2008 Heavy Autumn - Before Project, max WAPA Gen Outage: Griffith-Peacock & Hilltop-McConnico 230kV Lines	MW/% rate C:upslf16MyPSLF iver2-na Rating = 2

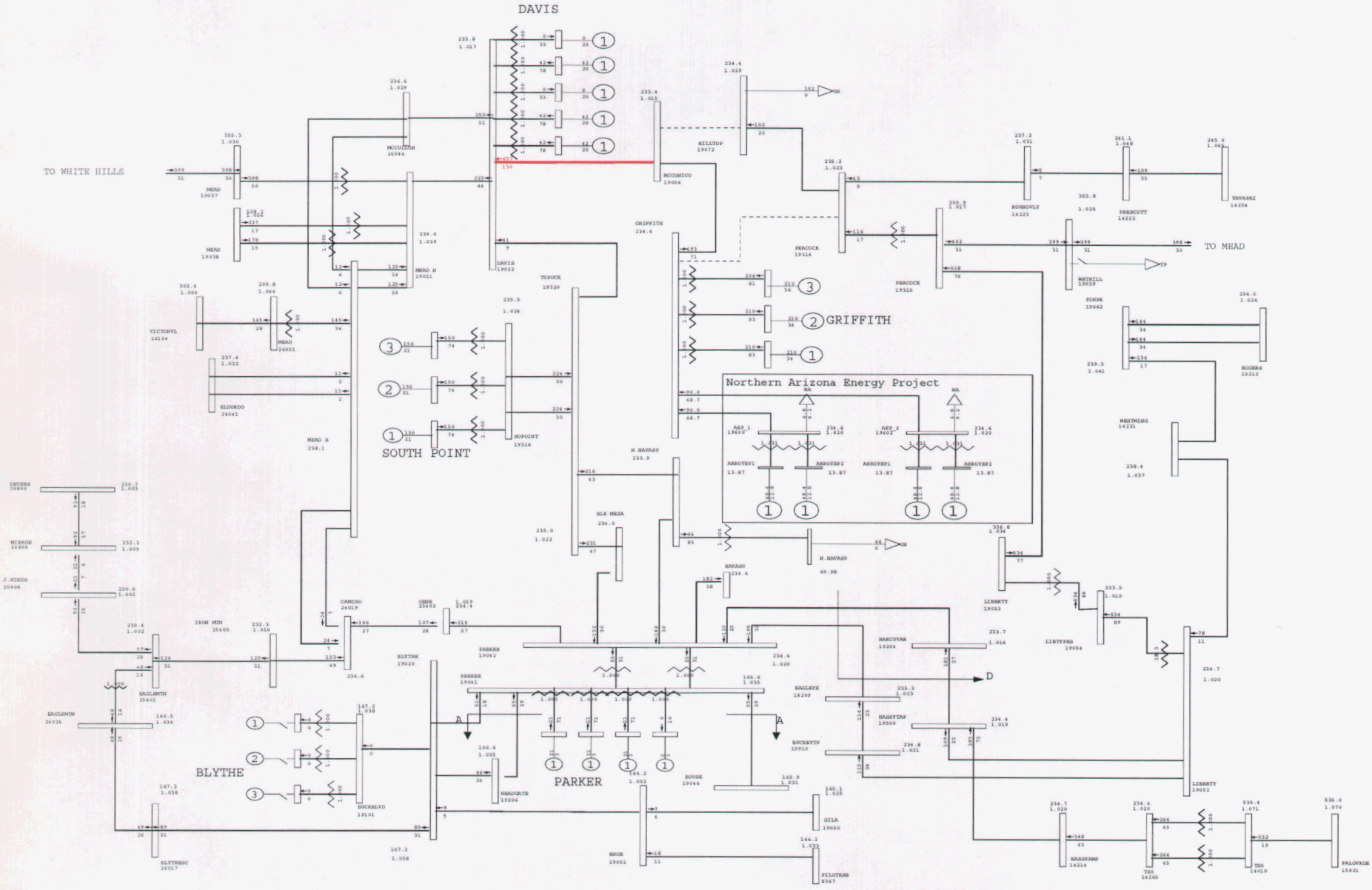

General Electric International, Inc. PSLF Program Thu Jul 19 15:17:45 2007 C:upslf16MyPSLF 8ha_pst_AI-rev1.sav

	2008 HEAVY AUTUMN, NORTHERN ARIZONA ENERGY PROJECT, POST-PROJECT - Area Interch	Plot 14 - 2008 Heavy Autumn - After Project, min WAPA Gen, Area Interchange	MW/% rate
	CASE: 08ha_pst_AI-rev1.sav	Outage: Griffith-Peacock & Hilltop-McConnico 230kV Lines	C:upslf16MyPSLF iver2-na
	EOR=9300MW, Minimum WAPA-DSW Generation Modeled.		Rating = 2

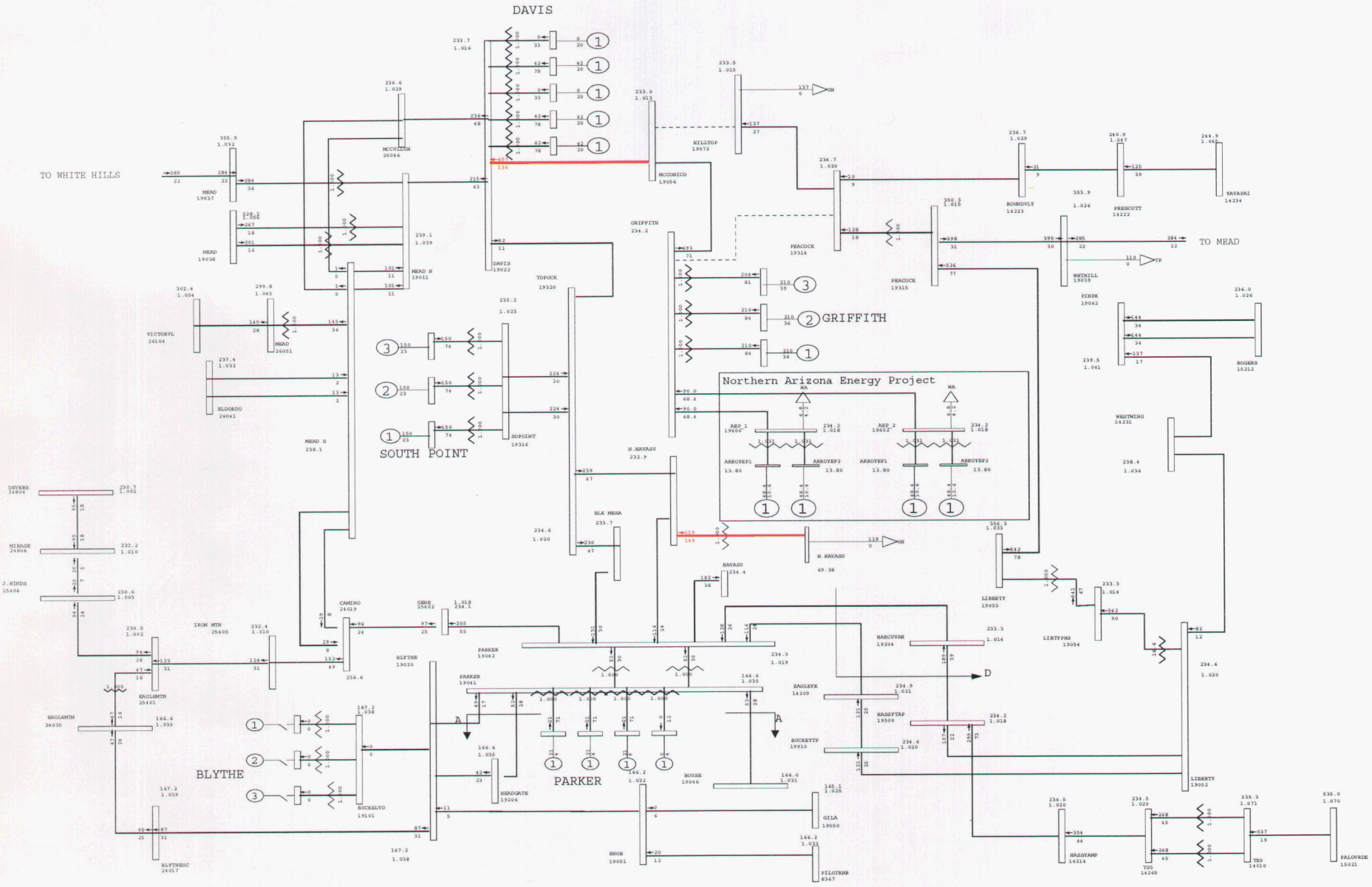

General Electric International, Inc. PSLF Program Thu Jul 19 15:17:47 2007 C:upslf16MyPSLF 8ha_pst_LD-rev1.sav

	2008 HEAVY AUTUMN, NORTHERN ARIZONA ENERGY PROJECT, POST-PROJECT - UNS Load Inc	Plot 15 - 2008 Heavy Autumn - After Project, min WAPA Gen, Regional Load	MW/% rate
	CASE: 08ha_pst_LD-rev1.sav	Outage: Griffith-Peacock & Hilltop-McConnico 230kV Lines	C:upslf16MyPSLF iver2-na
	EOR=9300MW, Minimum WAPA-DSW Generation Modeled.		Rating = 2

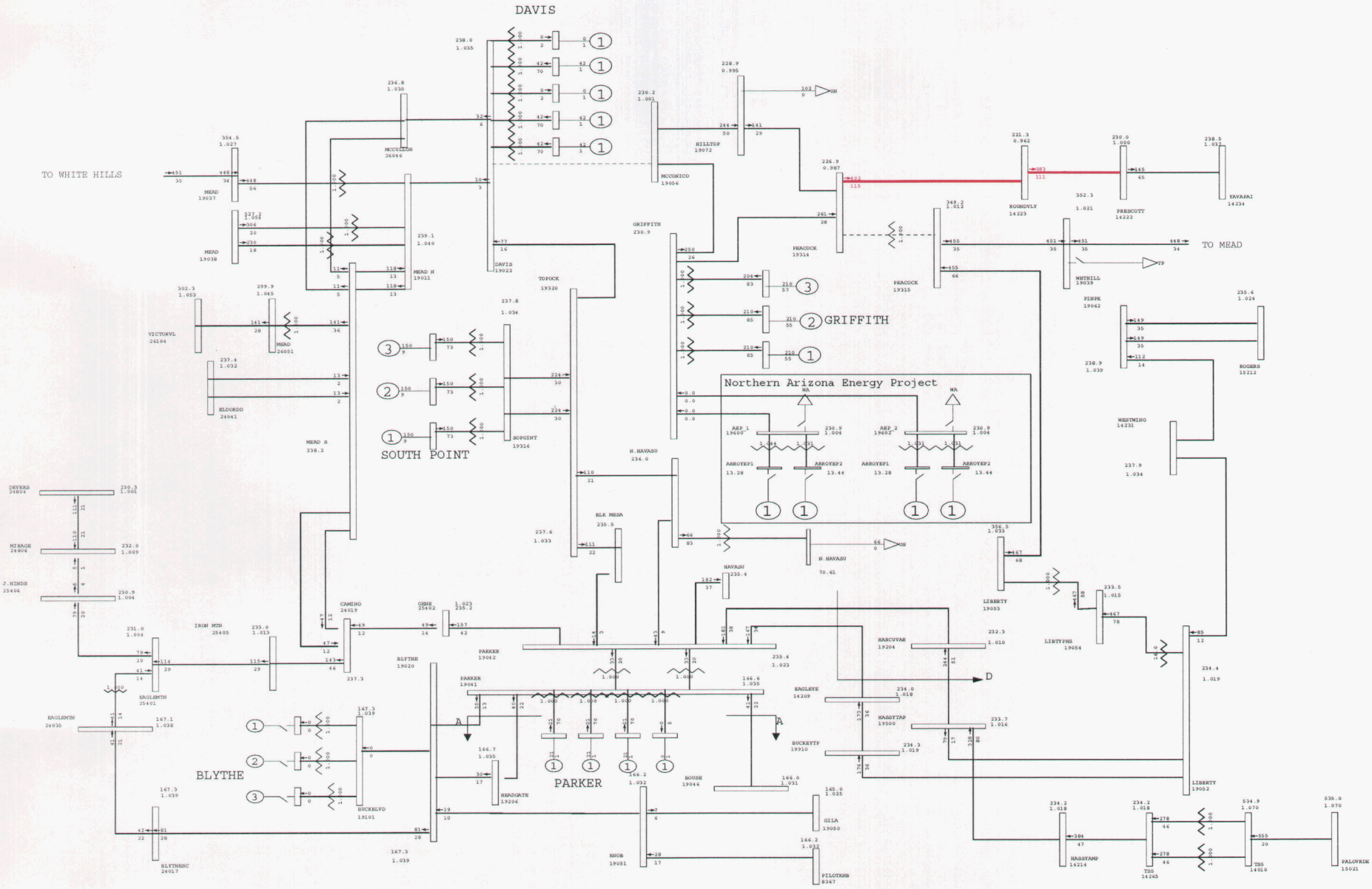

General Electric International, Inc. PSLF Program Thu Jul 19 15:17:50 2007 C:upslf16MyPSLF 8ha_pre-rev1.sav

2008 HEAVY AUTUMN, NORTHERN ARIZONA ENERGY PROJECT, PRE-PROJECT	Plot 16 - 2008 Heavy Autumn - Before Project, min WAPA Gen	MW/% rate
CASE: 08ha_pre-rev1.sav	Outage: Peacock 345/230 Tran & Davis-McConnico 230kV Line	C:upslf16MyPSLF iver2-na
EOR=9300MW, Min WAPA-DSW Generation Modeled.		Rating = 2

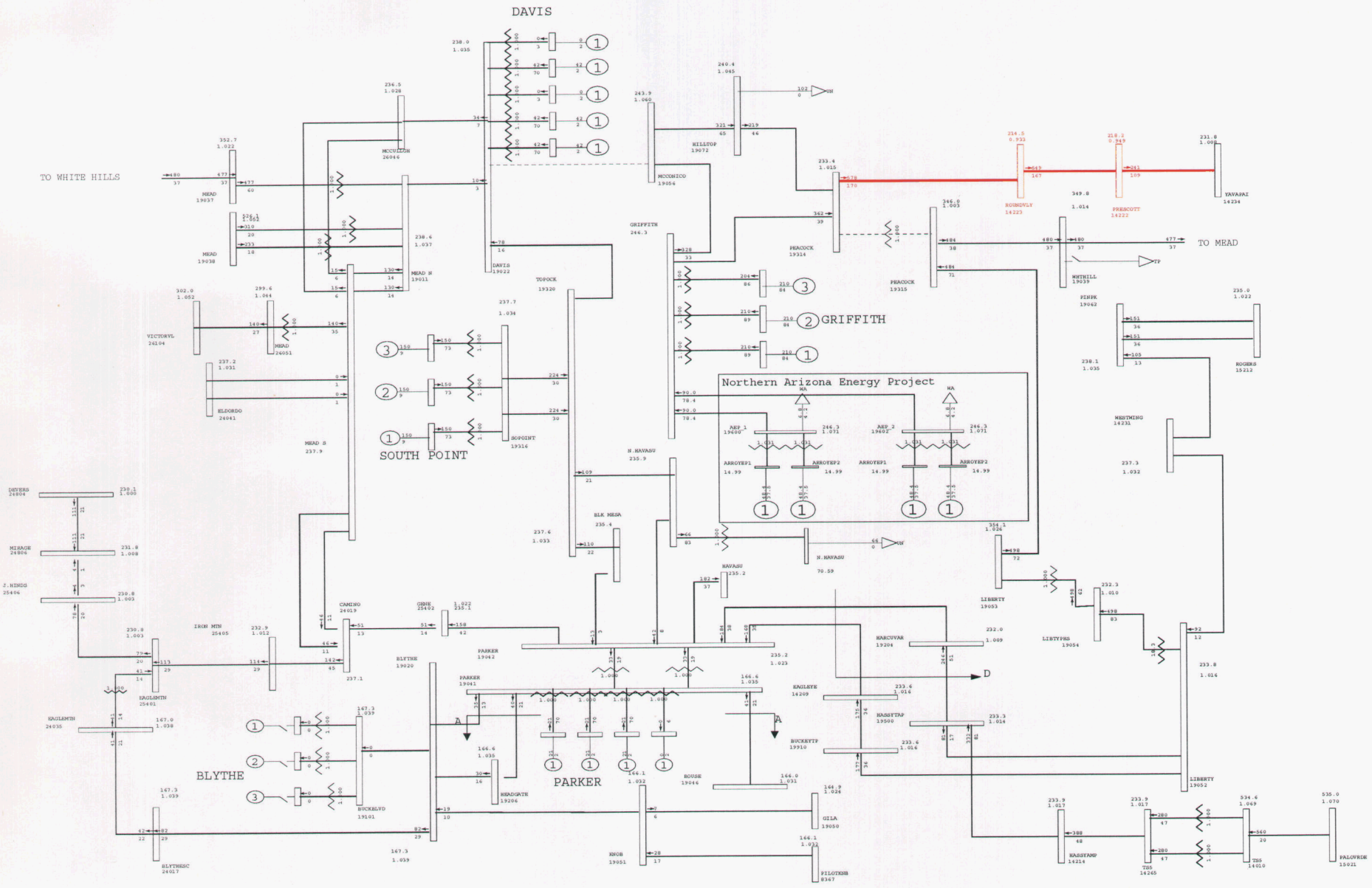

General Electric International, Inc. PSLF Program Thu Jul 19 15:17:53 2007 C:upslf16MyPSLF 8ha_pst_AI-rev1.sav

2008 HEAVY AUTUMN, NORTHERN ARIZONA ENERGY PROJECT, POST-PROJECT - Area Interch CASE: 08ha_pst_AI-rev1.sav EOR=9300MW, Minimum WAPA-DSW Generation Modeled.	Plot 17 - 2008 Heavy Autumn - After Project, min WAPA Gen, Area Interchange Outage: Peacock 345/230 Tran & Davis-McConnico 230kV Line	MW/% rate C:upslf16MyPSLF iver2-na Rating = 2

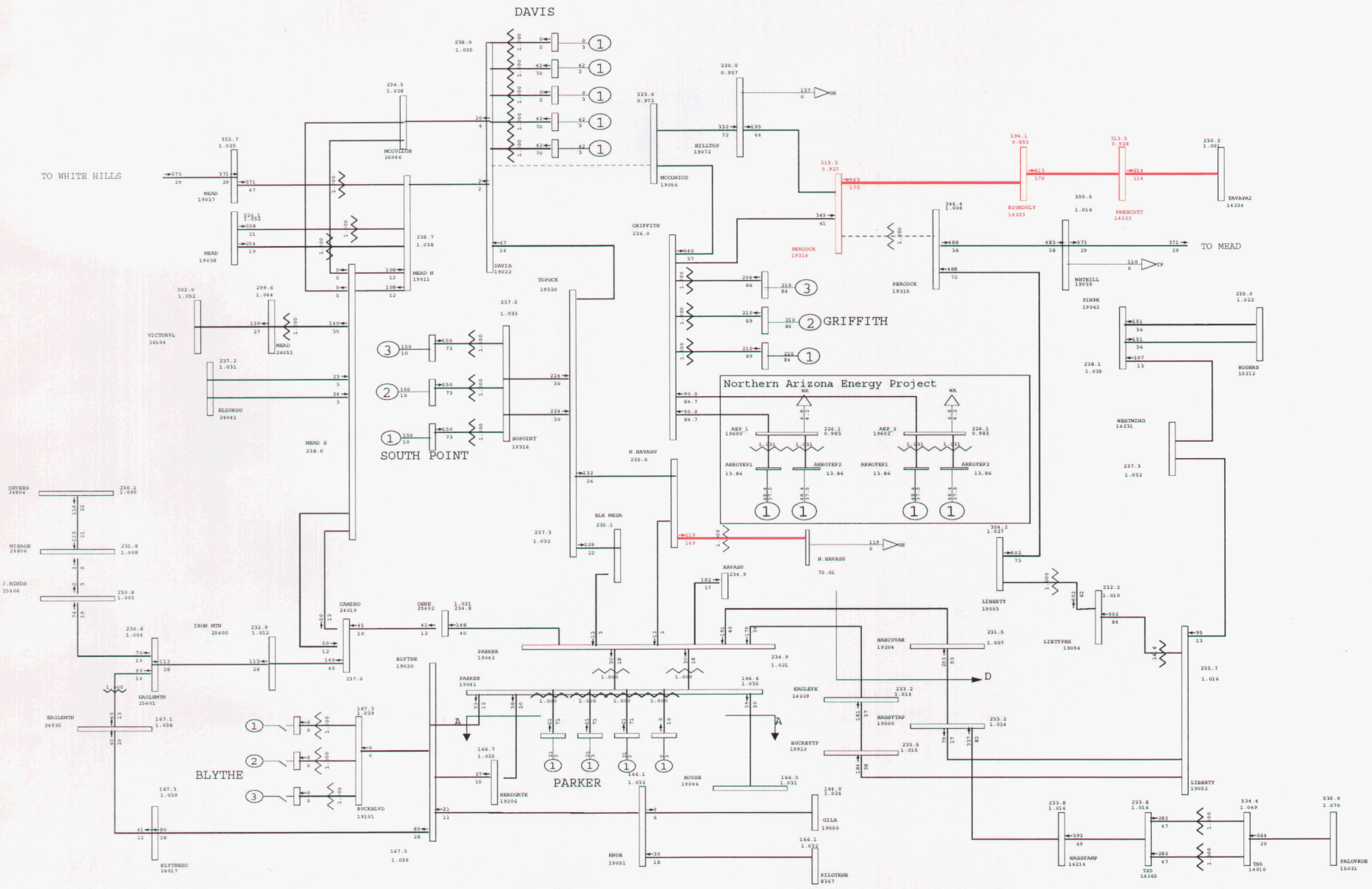

General Electric International, Inc. PSLF Program Thu Jul 19 15:17:58 2007 C:upslf16MyPSLF 8ha_pst_LD-rev1.sav

	2008 HEAVY AUTUMN, NORTHERN ARIZONA ENERGY PROJECT, POST-PROJECT - UNS Load Inc CASE: 08ha_pst_LD-rev1.sav EOR=9300MW, Minimum WAPA-DSW Generation Modeled.	Plot 18 - 2008 Heavy Autumn - After Project, min WAPA Gen, Regional Load Outage: Peacock 345/230 Tran & Davis-McConnico 230kV Line	MW/% rate C:upslf16MyPSLF iver2-na Rating = 2

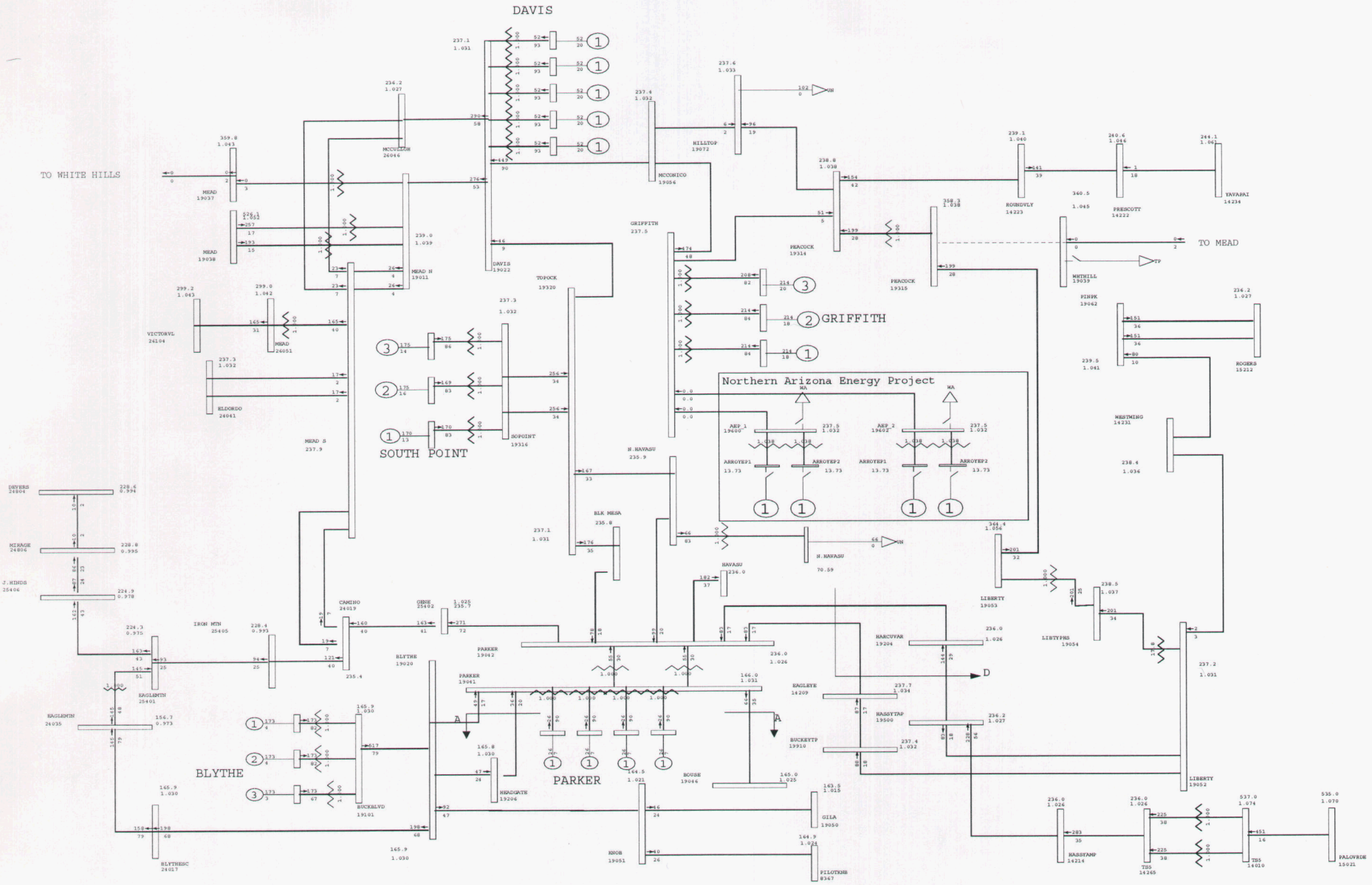

General Electric International, Inc. PSLF Program Thu Jul 19 15:18:00 2007 C:upslf16MyPSLF 8ha_pre_max-rev1.sav

	2008 HEAVY AUTUMN, NORTHERN ARIZONA ENERGY PROJECT, PRE-PROJECT	Plot 19 - 2008 Heavy Autumn - Before Project, max WAPA Gen	MW/% rate
	CASE: 08ha_pre_max-rev1.sav	Outage: Peacock-Mead 345kV Line	C:upslf16MyPSLF iver2-na
	EOR=9300MW, Maximum WAPA-DSW Generation Modeled.		Rating = 2

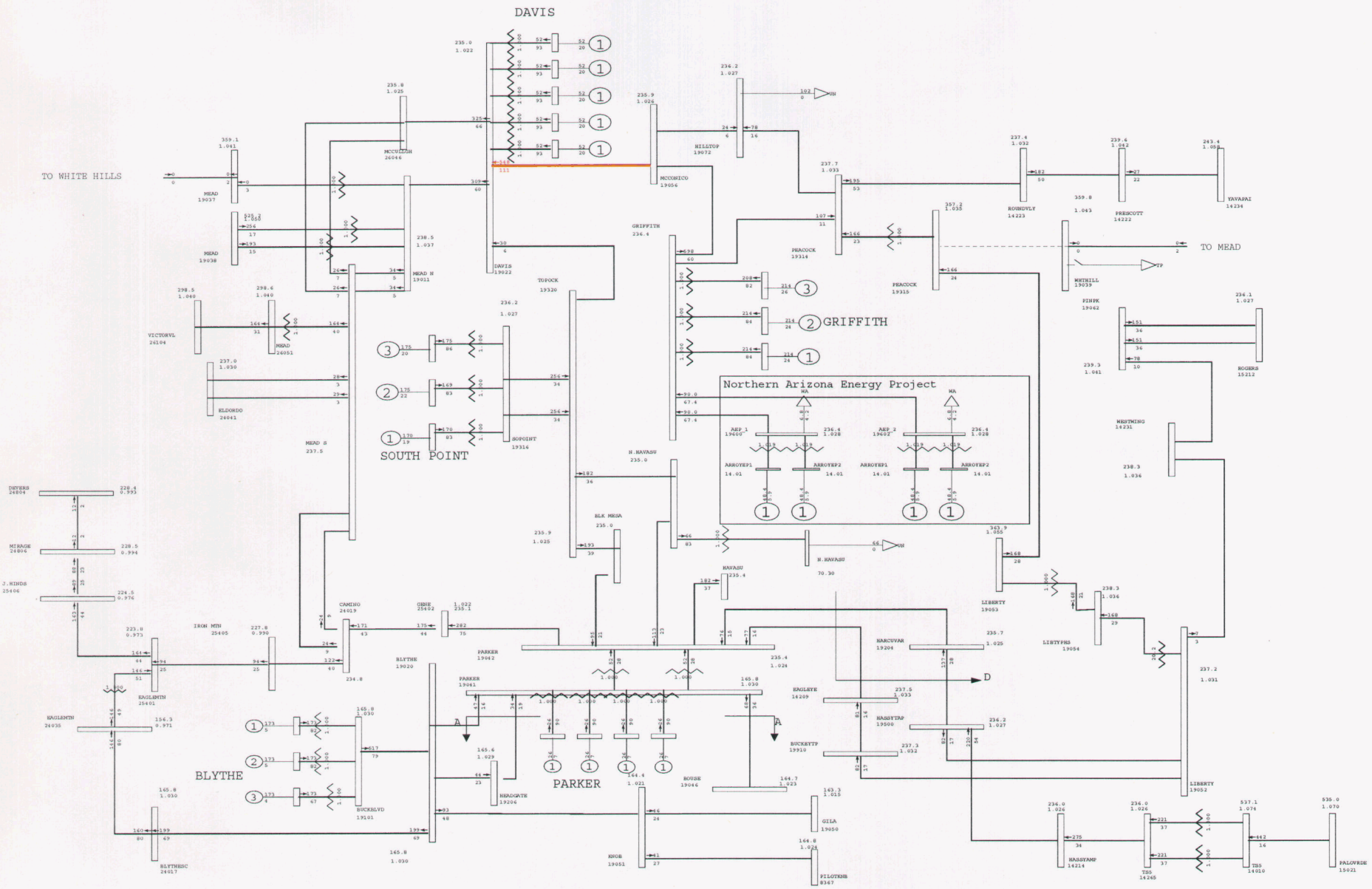

General Electric International, Inc. PSLF Program Thu Jul 19 15:18:02 2007 C:upslf16MyPSLF 8ha_pst_maxAI-rev1.sav

2008 HEAVY AUTUMN, NORTHERN ARIZONA ENERGY PROJECT, POST-PROJECT - Area Interch CASE: 08ha_pst_maxAI-rev1.sav EOR=9300MW, Maximum WAPA-DSW Generation Modeled.	Plot 20 - 2008 Heavy Autumn - After Project, max WAPA Gen, Area Interchange Outage: Peacock-Mead 345kV Line	MW/% rate C:upslf16MyPSLF iver2-na Rating = 2

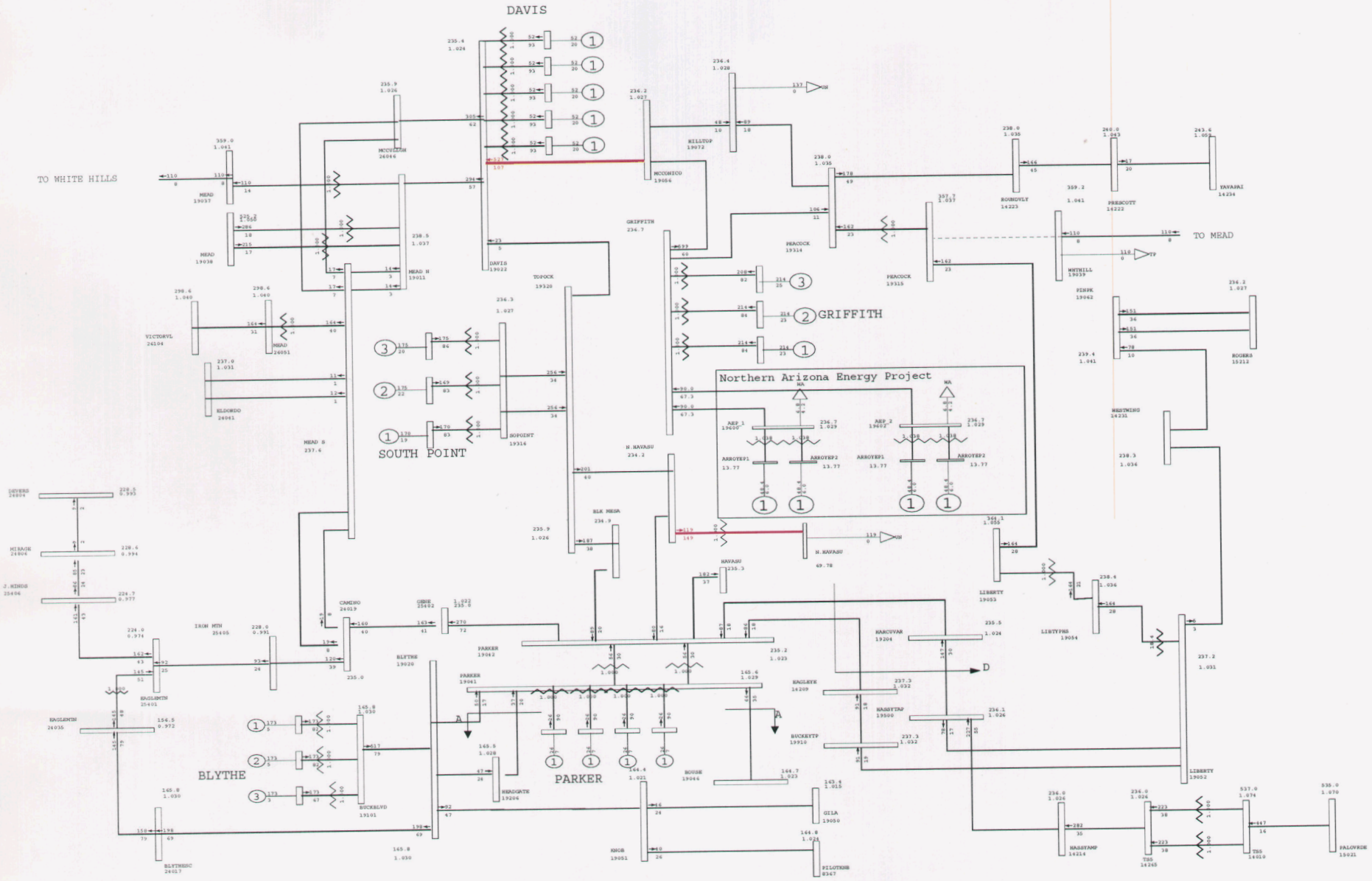

General Electric International, Inc. PSLF Program Thu Jul 19 15:18:04 2007 C:upslf16MyPSLF 8ha_pst_maxLD-rev1.sav

2008 HEAVY AUTUMN, NORTHERN ARIZONA ENERGY PROJECT, POST-PROJECT - UNS Load Inc

CASE: 08ha_pst_maxLD-rev1.sav

EOR=9300MW, Maximum WAPA-DSW Generation Modeled.

Plot 21 - 2008 Heavy Autumn - After Project, max WAPA Gen, Regional Load

Outage: Peacock-Mead 345kV Line

MW/% rate

C:upslf16MyPSLF iver2-na

Rating = 2

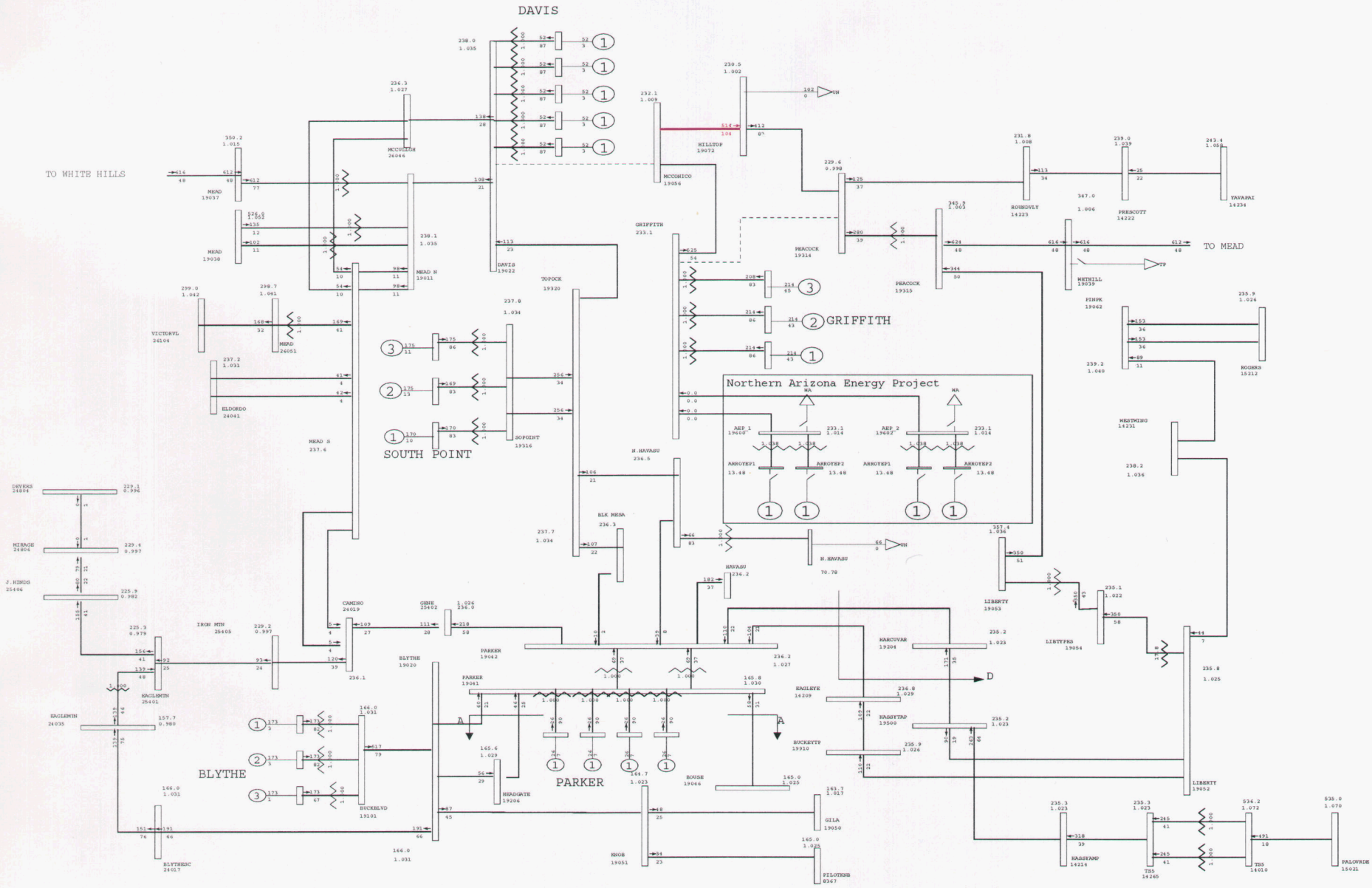

General Electric International, Inc. PSLF Program Thu Jul 19 15:18:06 2007 C:upslf16MyPSLF 8ha_pre_max-rev1.sav

2008 HEAVY AUTUMN, NORTHERN ARIZONA ENERGY PROJECT, PRE-PROJECT CASE: 08ha_pre_max-rev1.sav EOR=9300MW, Maximum WAPA-DSW Generation Modeled.	Plot 22 - 2008 Heavy Autumn - Before Project, max WAPA Gen Outage: Griffith-Peacock & Davis-McConnico 230kV Lines	MW/% rate C:upslf16MyPSLF iver2-na Rating = 2

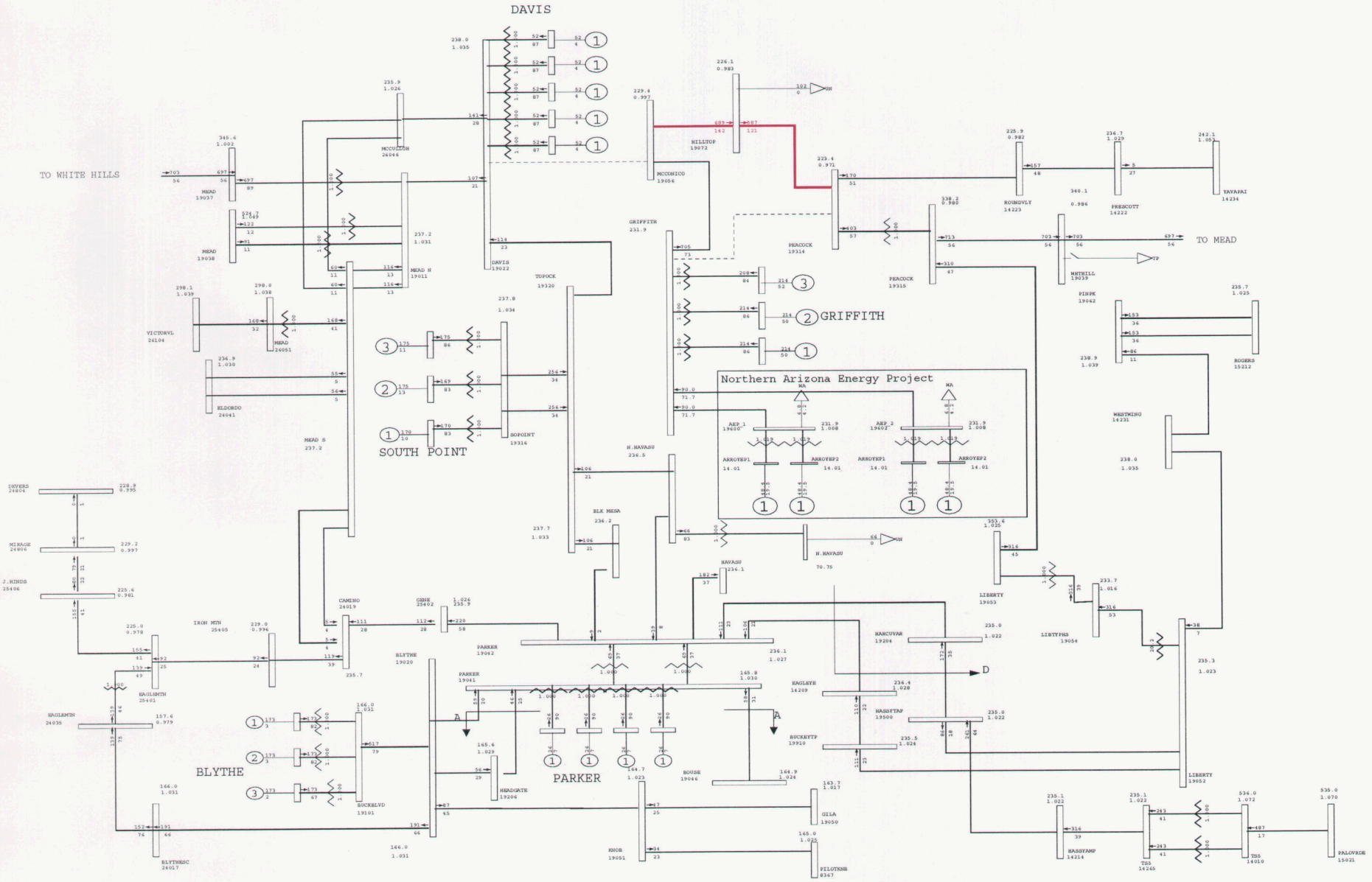

General Electric International, Inc. PSLF Program Thu Jul 19 15:18:10 2007 C:upslf16MyPSLF 8ha_pst_maxAI-rev1.sav

	2008 HEAVY AUTUMN, NORTHERN ARIZONA ENERGY PROJECT, POST-PROJECT - Area Interch	Plot 23 - 2008 Heavy Autumn - After Project, max WAPA Gen, Area Interchange	MW/% rate
	CASE: 08ha_pst_maxAI-rev1.sav	Outage: Griffith-Peacock & Davis-McConnico 230kV Lines	C:upslf16MyPSLF iver2-na
	EOR=9300MW, Maximum WAPA-DSW Generation Modeled.		Rating = 2

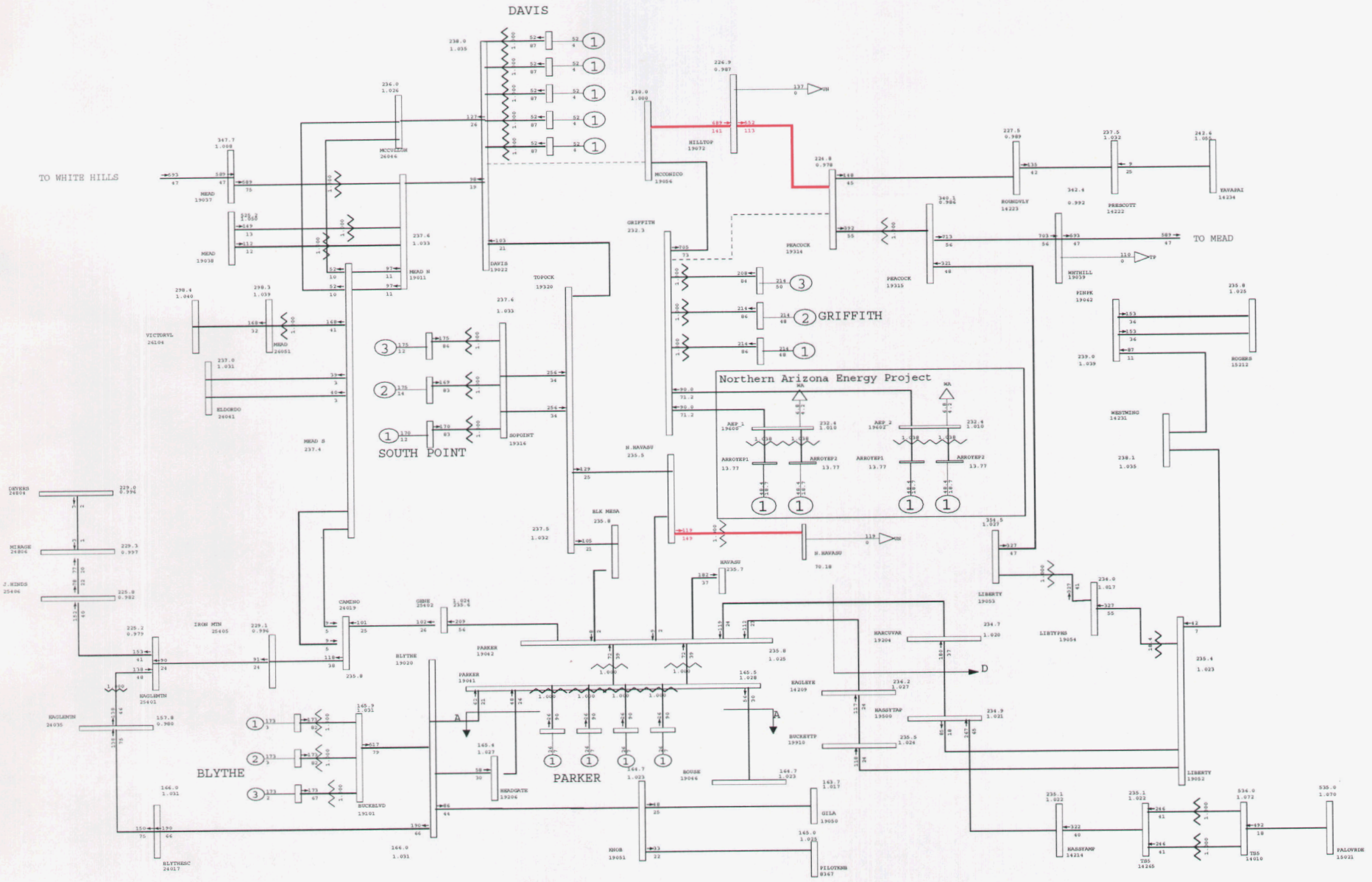

General Electric International, Inc. PSLF Program Thu Jul 19 15:18:13 2007 C:upslf16MyPSLF 8ha_pst_maxLD-rev1.sav

2008 HEAVY AUTUMN, NORTHERN ARIZONA ENERGY PROJECT, POST-PROJECT - UNS Load Inc

CASE: 08ha_pst_maxLD-rev1.sav

EOR=9300MW, Maximum WAPA-DSW Generation Modeled.

Plot 24 - 2008 Heavy Autumn - After Project, max WAPA Gen, Regional Load

Outage: Griffith-Peacock & Davis-McConnico 230kV Lines

MW/% rate

C:upslf16MyPSLF iver2-na

Rating = 2

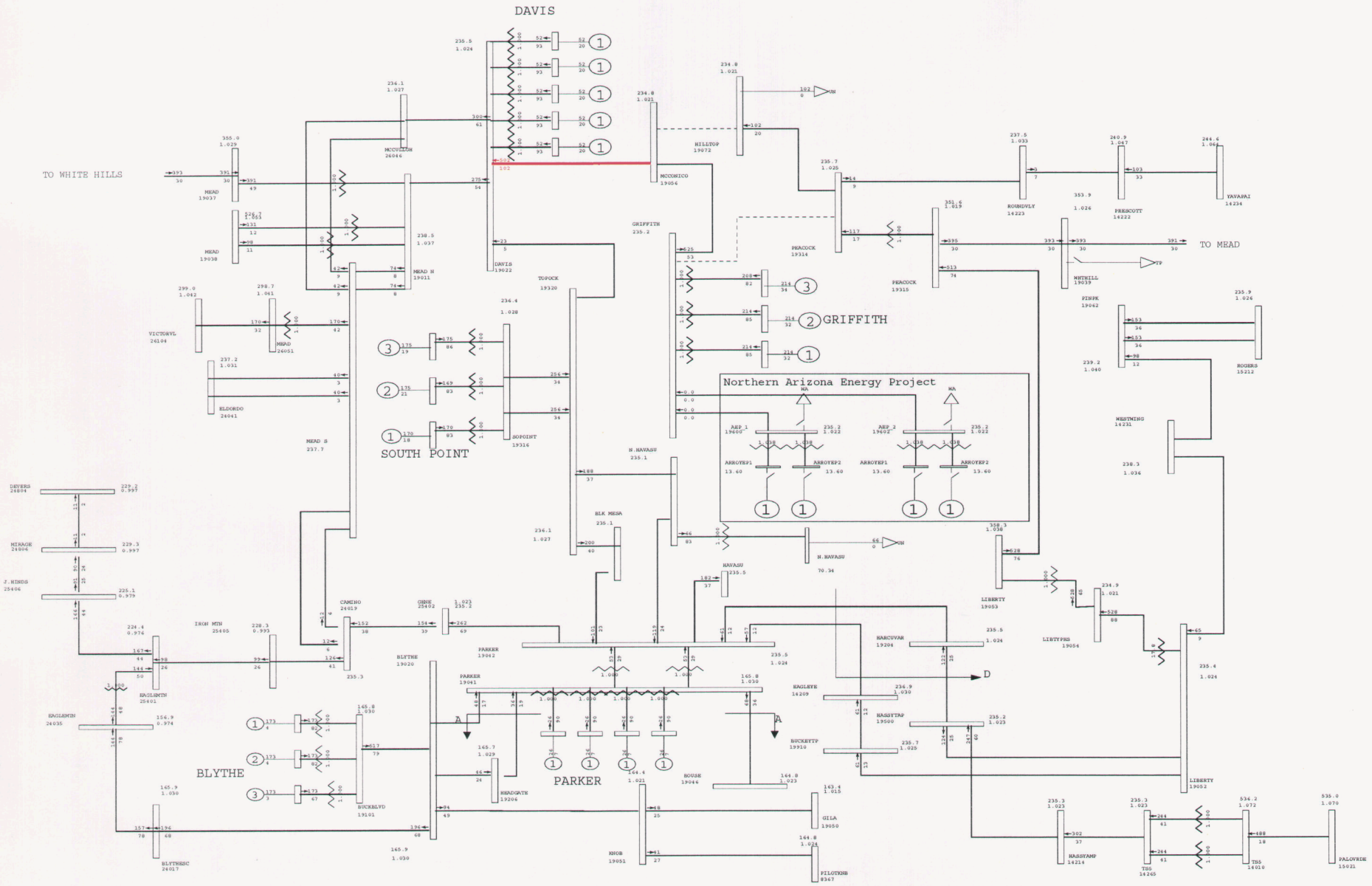

General Electric International, Inc. PSLF Program Thu Jul 19 15:28:15 2007 C:upslf16MyPSLF 8ha_pre_max-rev1.sav

2008 HEAVY AUTUMN, NORTHERN ARIZONA ENERGY PROJECT, PRE-PROJECT	Plot 25 - 2008 Heavy Autumn - Before Project, max WAPA Gen	MW/% rate
CASE: 08ha_pre_max-rev1.sav	Outage: Griffith-Peacock & Hilltop-McConnico 230kV Lines	C:upslf16MyPSLF iver2-na
EOR=9300MW, Maximum WAPA-DSW Generation Modeled.		Rating = 2

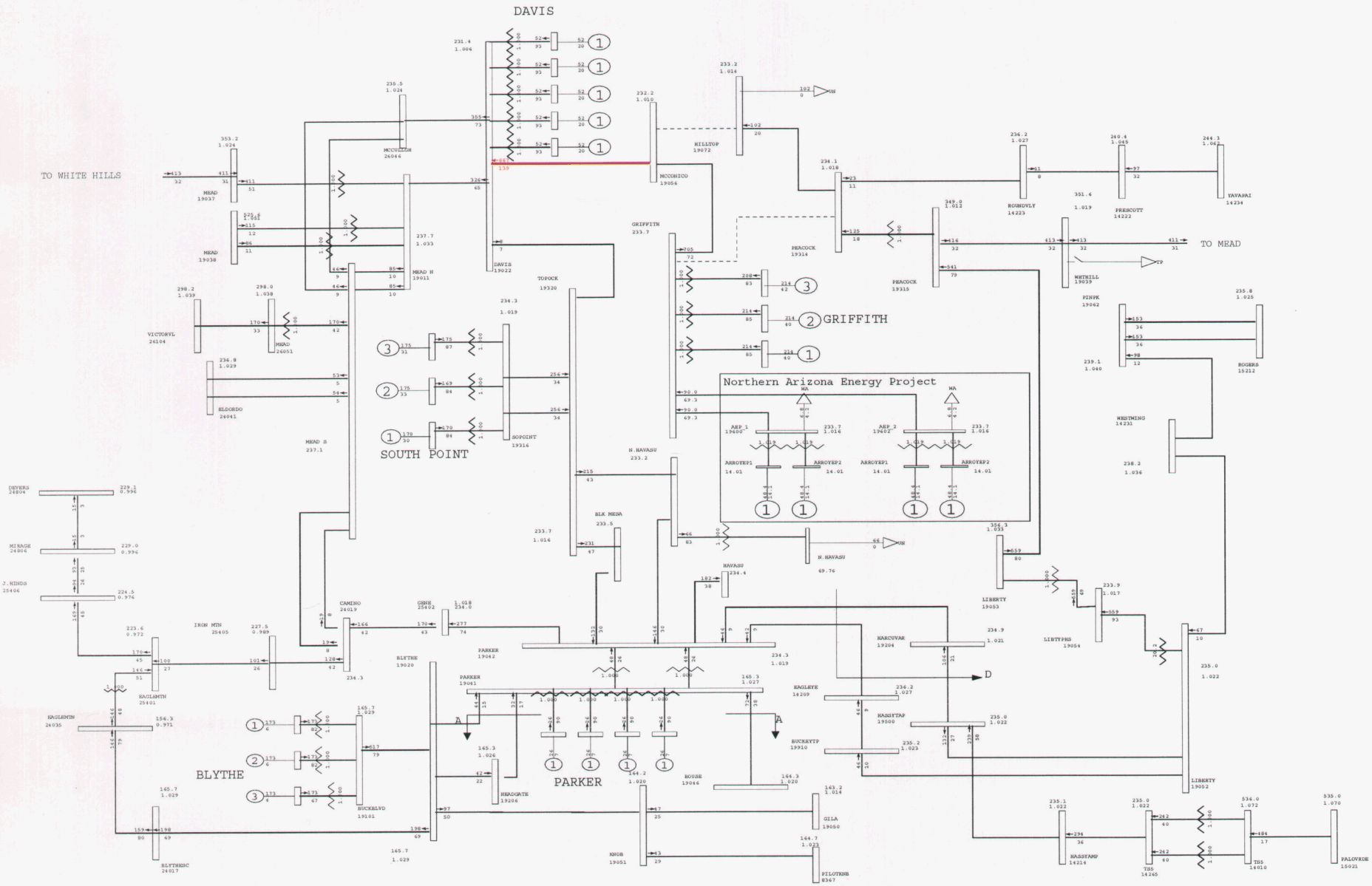

General Electric International, Inc. PSLF Program Thu Jul 19 15:18:18 2007 C:upslf16MyPSLF 8ha_pst_maxAI-rev1.sav

	2008 HEAVY AUTUMN, NORTHERN ARIZONA ENERGY PROJECT, POST-PROJECT - Area Interch	Plot 26 - 2008 Heavy Autumn - After Project, max WAPA Gen, Area Interchange	MW/% rate
	CASE: 08ha_pst_maxAI-rev1.sav	Outage: Griffith-Peacock & Hilltop-McConnico 230kV Lines	C:upslf16MyPSLF iver2-na
	EOR=9300MW, Maximum WAPA-DSW Generation Modeled.		Rating = 2

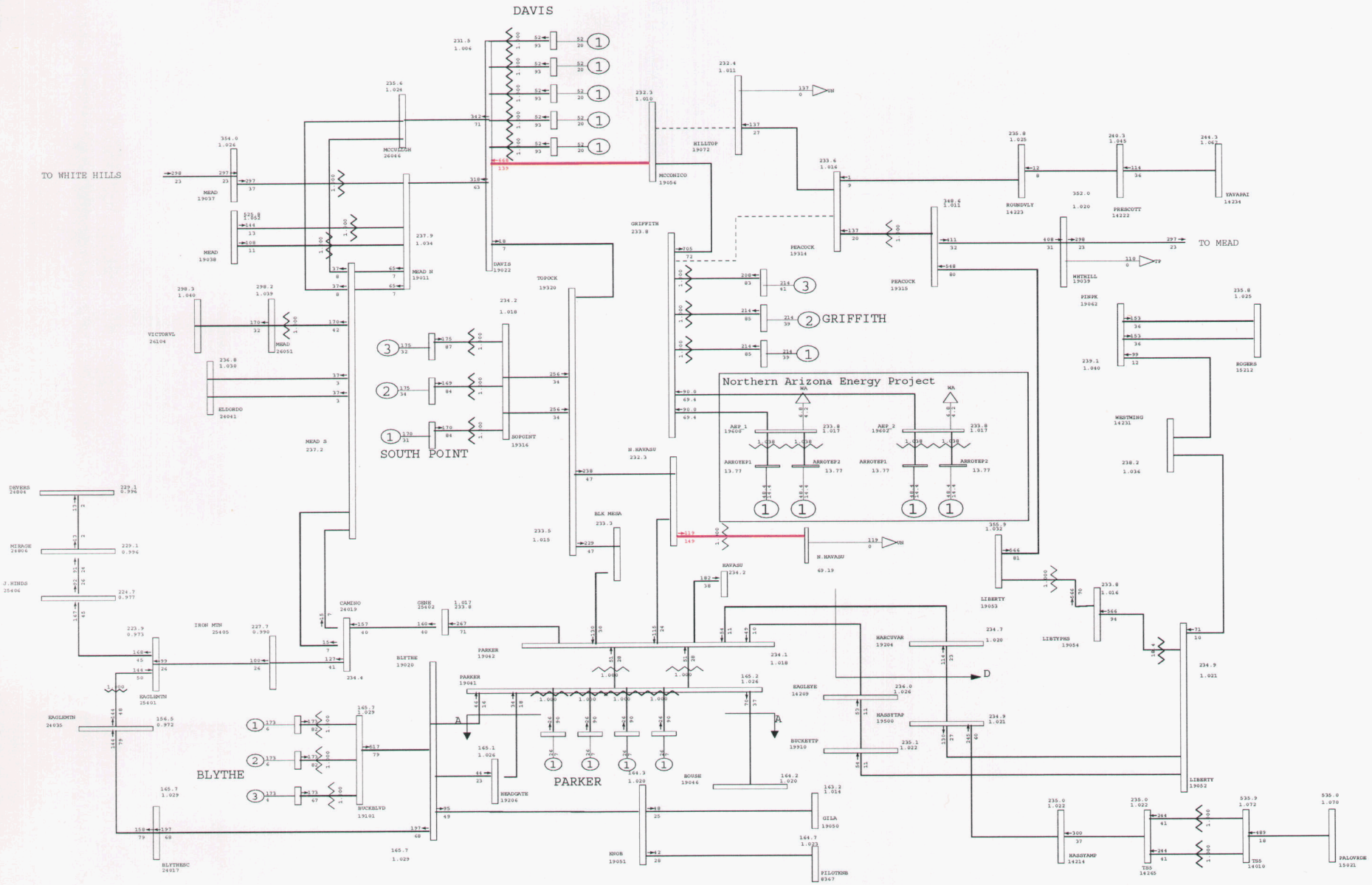

General Electric International, Inc. PSLF Program Thu Jul 19 15:18:20 2007 C:upslf16MyPSLF 8ha_pst_maxLD-rev1.sav

2008 HEAVY AUTUMN, NORTHERN ARIZONA ENERGY PROJECT, POST-PROJECT - UNS Load Inc	Plot 27 - 2008 Heavy Autumn - After Project, max WAPA Gen, Regional Load	MW/% rate
CASE: 08ha_pst_maxLD-rev1.sav	Outage: Griffith-Peacock & Hilltop-McConnico 230kV Lines	C:upslf16MyPSLF iver2-na
EOR=9300MW, Maximum WAPA-DSW Generation Modeled.		Rating = 2

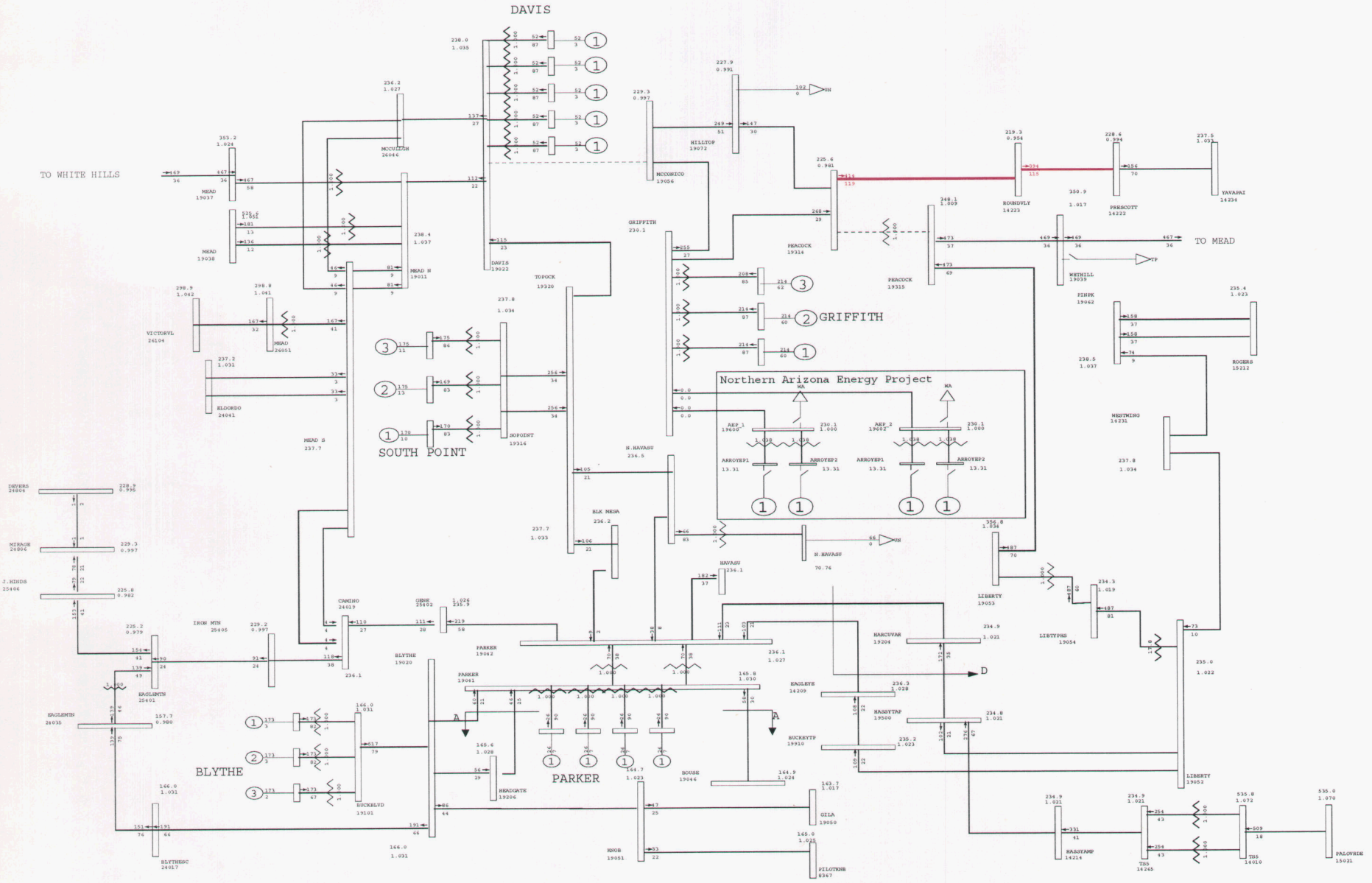

General Electric International, Inc. PSLF Program Thu Jul 19 15:18:22 2007 C:upslf16MyPSLF 8ha_pre_max-rev1.sav

2008 HEAVY AUTUMN, NORTHERN ARIZONA ENERGY PROJECT, PRE-PROJECT CASE: 08ha_pre_max-rev1.sav EOR=9300MW, Maximum WAPA-DSW Generation Modeled.	Plot 28 - 2008 Heavy Autumn - Before Project, max WAPA Gen Outage: Peacock 345/230 Tran & Davis-McConnico 230kV Line	MW/% rate C:upslf16MyPSLF iver2-na Rating = 2

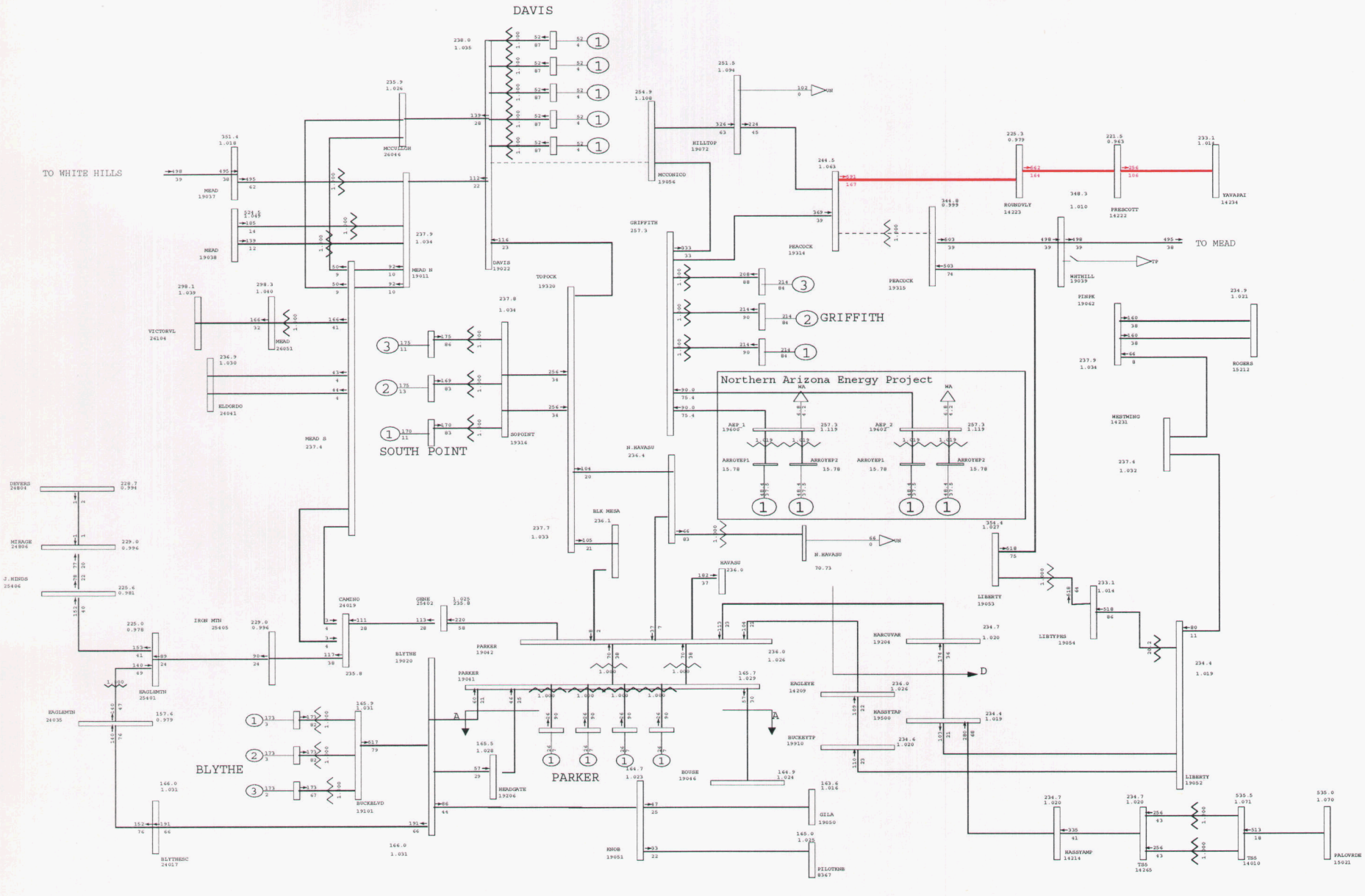

General Electric International, Inc. PSLF Program Thu Jul 19 15:18:26 2007 C:upslf16MyPSLF 8ha_pst_maxAI-rev1.sav

2008 HEAVY AUTUMN, NORTHERN ARIZONA ENERGY PROJECT, POST-PROJECT - Area Interch	Plot 29 - 2008 Heavy Autumn - After Project, max WAPA Gen, Area Interchange	MW/% rate
CASE: 08ha_pst_maxAI-rev1.sav	Outage: Peacock 345/230 Tran & Davis-McConnico 230kV Line	C:upslf16MyPSLF iver2-na
EOR=9300MW, Maximum WAPA-DSW Generation Modeled.		Rating = 2

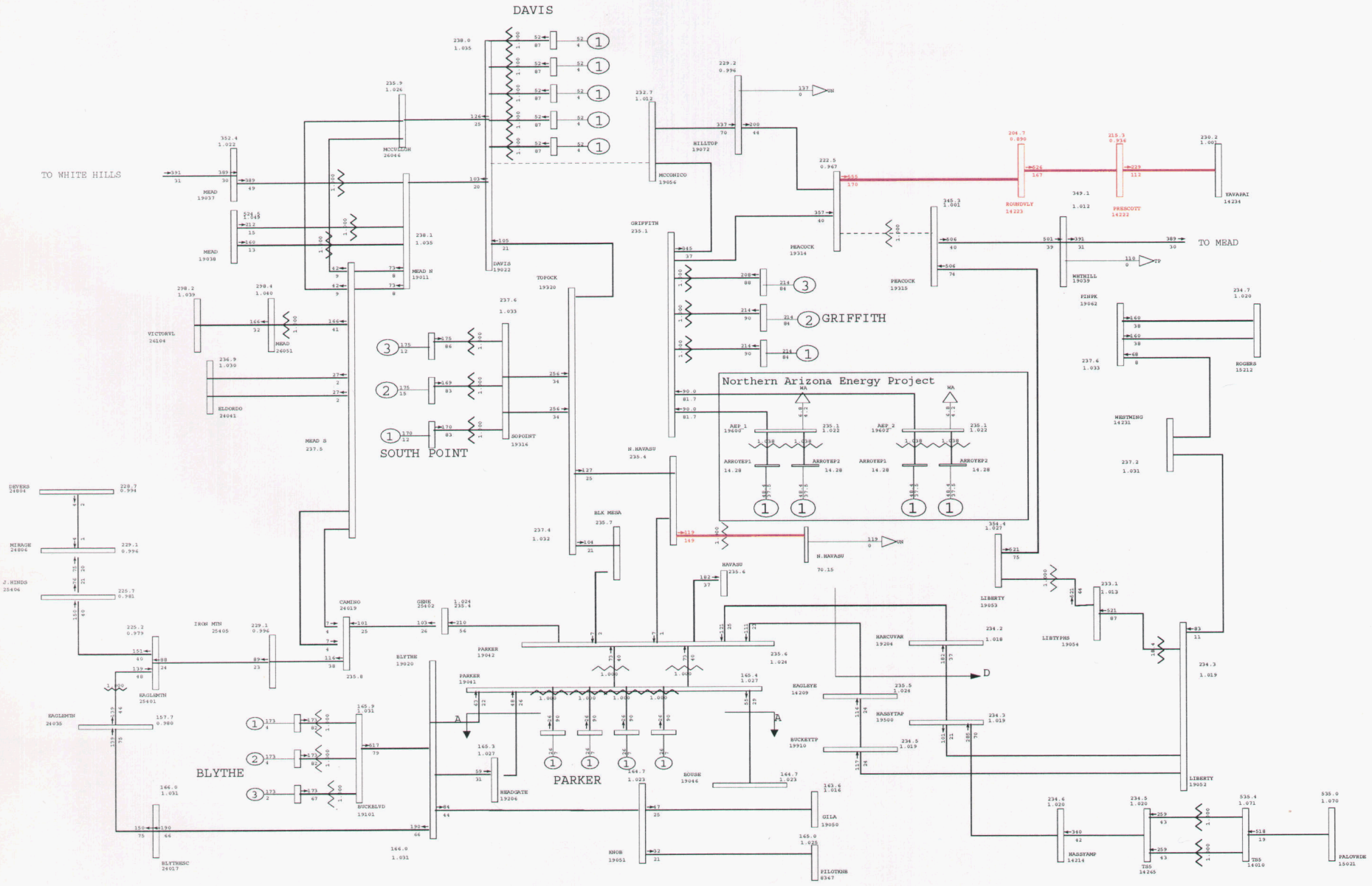

General Electric International, Inc. PSLF Program Thu Jul 19 15:18:30 2007 C:upslf16MyPSLF 8ha_pst_maxLD-rev1.sav

	2008 HEAVY AUTUMN, NORTHERN ARIZONA ENERGY PROJECT, POST-PROJECT - UNS Load Inc	Plot 30 - 2008 Heavy Autumn - After Project, max WAPA Gen, Regional Load	MW/% rate
	CASE: 08ha_pst_maxLD-rev1.sav	Outage: Peacock 345/230 Tran & Davis-McConnico 230kV Line	C:upslf16MyPSLF iver2-na
	EOR=9300MW, Maximum WAPA-DSW Generation Modeled.		Rating = 2

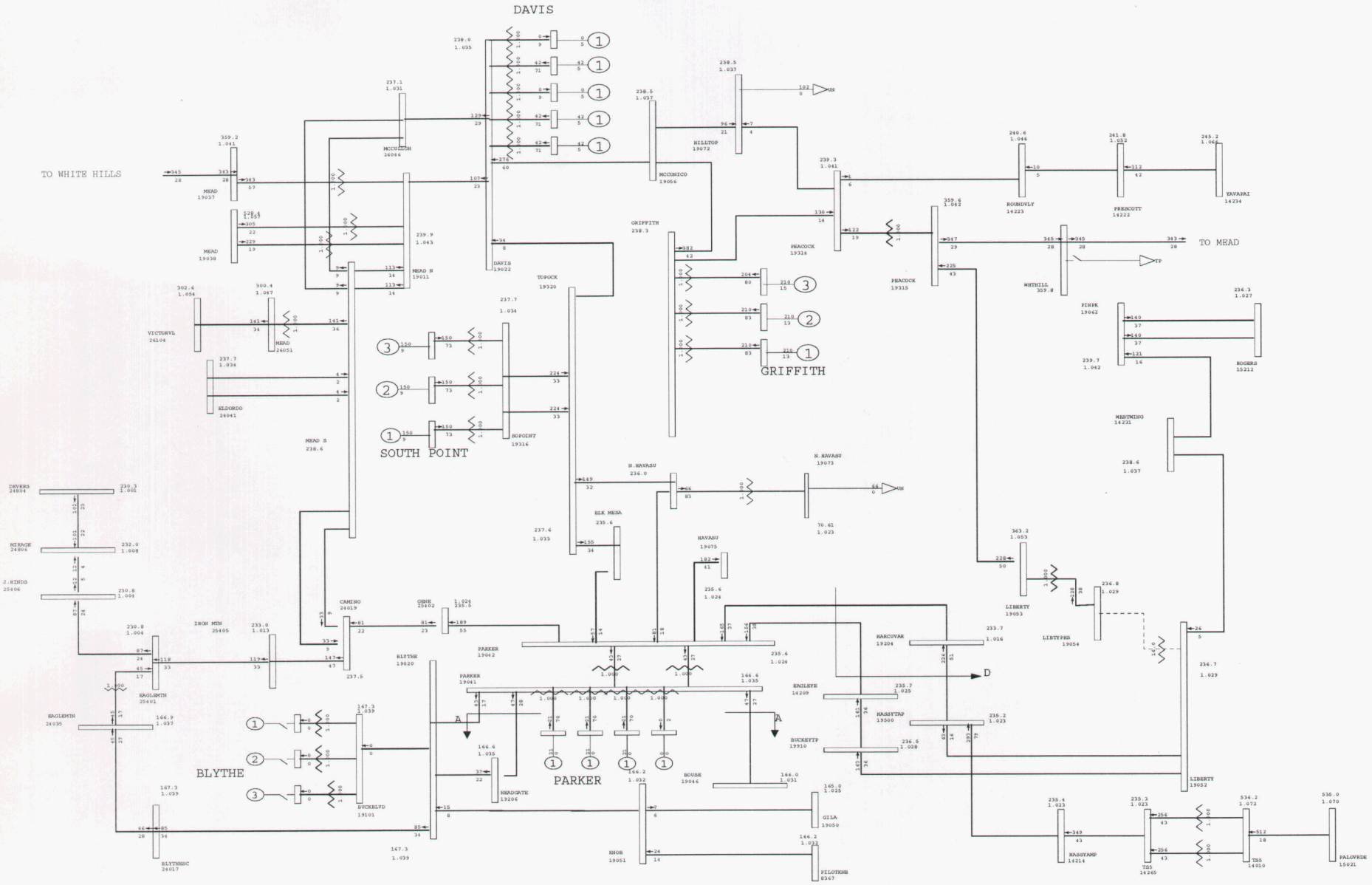

General Electric International, Inc. PSLF Program Thu Jul 19 15:18:33 2007 C:upslf16MyPSLF 8ha_pre-LibBP-rev1.sav

	2008 HEAVY AUTUMN, NORTHERN ARIZONA ENERGY PROJECT, PRE-PROJECT CASE: 08ha_pre-rev1.sav EOR=9300MW, Min WAPA-DSW Generation Modeled.	Plot 31 - 2008 Heavy Autumn Normal Conditions - Before Project, Minimum WAPA Ge	MW/% rate C:upslf16MyPSLF iver2.dr Rating = 1

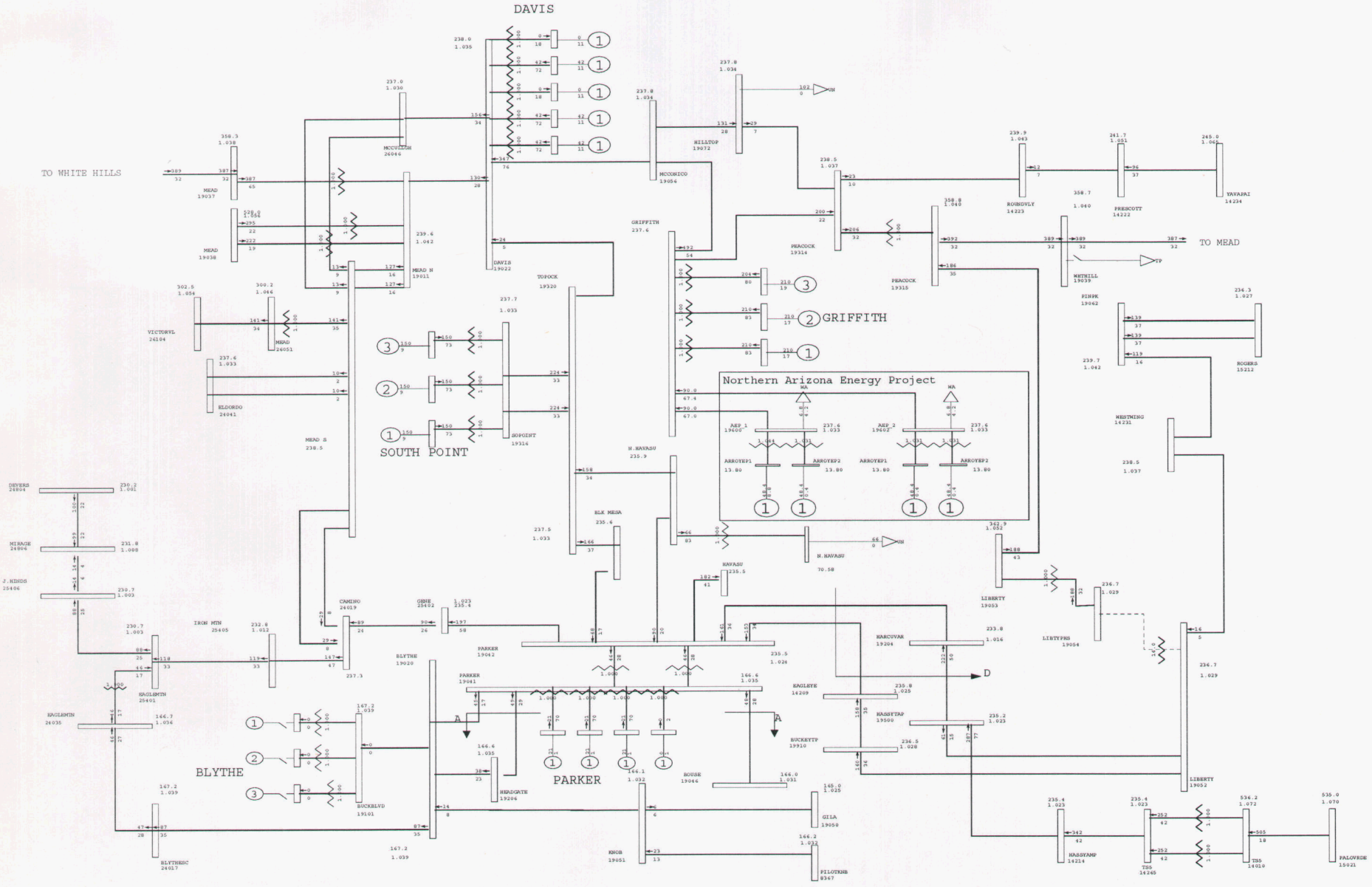

General Electric International, Inc. PSLF Program Thu Jul 19 15:18:34 2007 C:upslf16MyPSLF 8ha_pst_AI-LibBP-rev1.sav

	2008 HEAVY AUTUMN, NORTHERN ARIZONA ENERGY PROJECT, POST-PROJECT - Area Interch	Plot 32 - 2008 Heavy Autumn Normal Conditions - After Project, Min WAPA Gen, Ar	MW/% rate
	CASE: 08ha_pst_AI-LibBP-rev1.sav		C:upslf16MyPSLF iver2-na
	EOR=9300MW, Minimum WAPA-DSW Generation Modeled.		Rating = 1

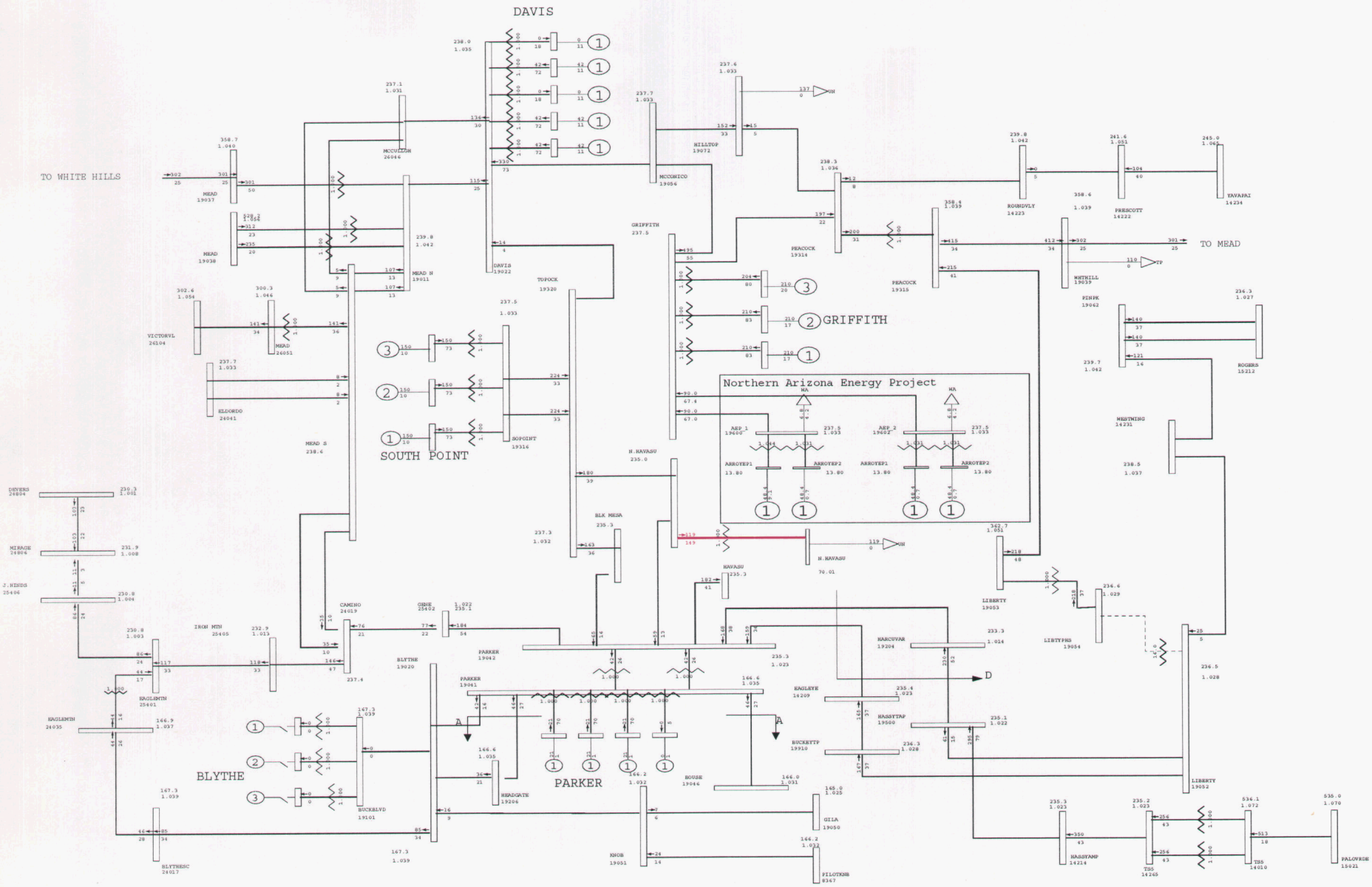

General Electric International, Inc. PSLF Program Thu Jul 19 15:18:36 2007 C:upslf16MyPSLF 8ha_pst_LD-LibBP-rev1.sav

	2008 HEAVY AUTUMN, NORTHERN ARIZONA ENERGY PROJECT, POST-PROJECT - UNS Load Inc CASE: 08ha_pst_LD-LibBP-rev1.sav EOR=9300MW, Minimum WAPA-DSW Generation Modeled.	Plot 33 - 2008 Heavy Autumn Normal Conditions - After Project, Min WAPA Gen, Lo	MW/% rate C:upslf16MyPSLF iver2-na Rating = 1

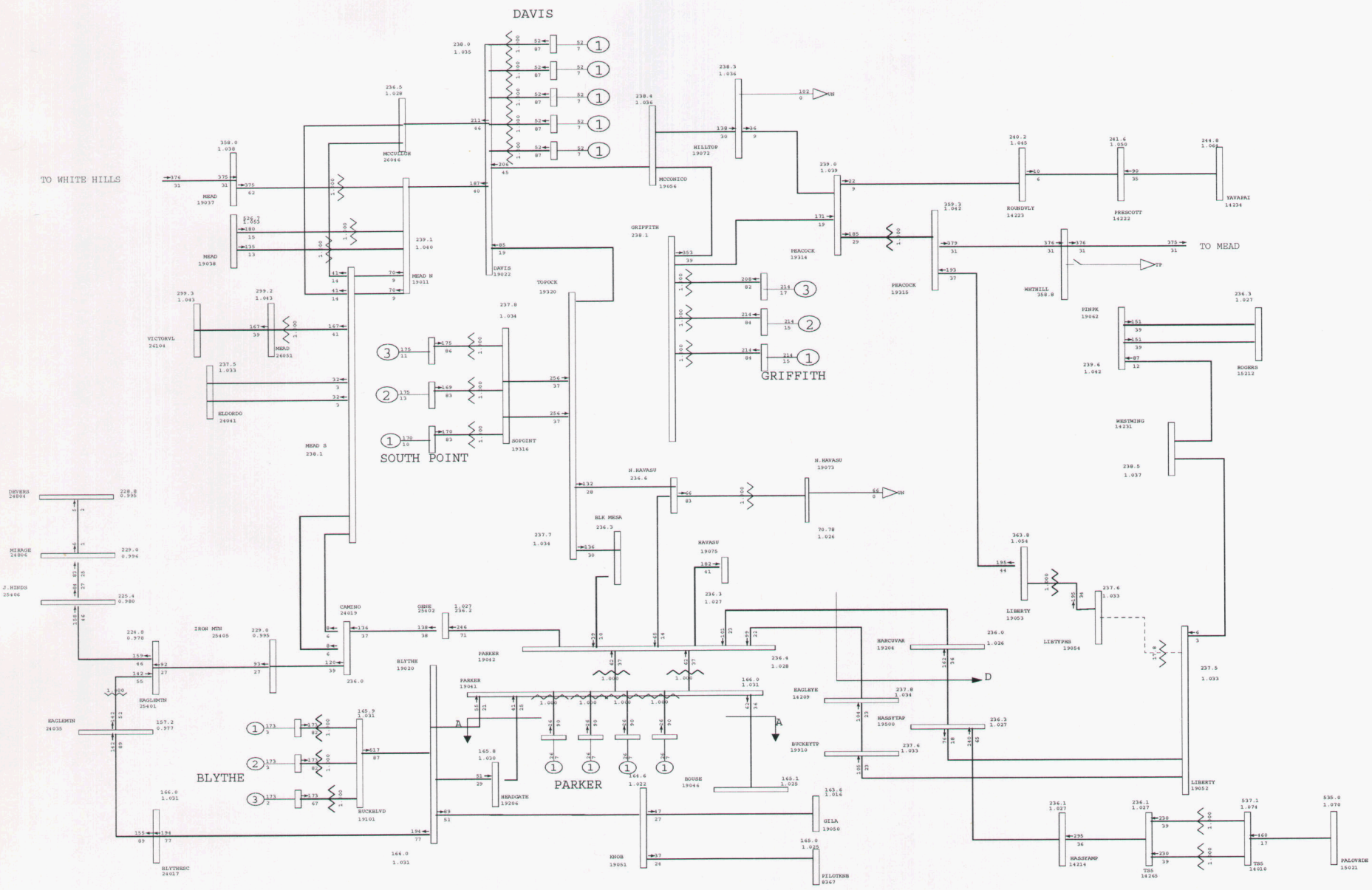

General Electric International, Inc. PSLF Program Thu Jul 19 15:18:38 2007 C:upslf16MyPSLF 8ha_pre_max-LibBP-rev1.sav

	2008 HEAVY AUTUMN, NORTHERN ARIZONA ENERGY PROJECT, PRE-PROJECT CASE: 08ha_pre_max-LibBP-rev1.sav EOR=9300MW, Maximum WAPA-DSW Generation Modeled.	Plot 34 - 2008 Heavy Autumn Normal Conditions - Before Project, Maximum Gen	MW/% rate C:upslf16MyPSLF iver2.dr Rating = 1

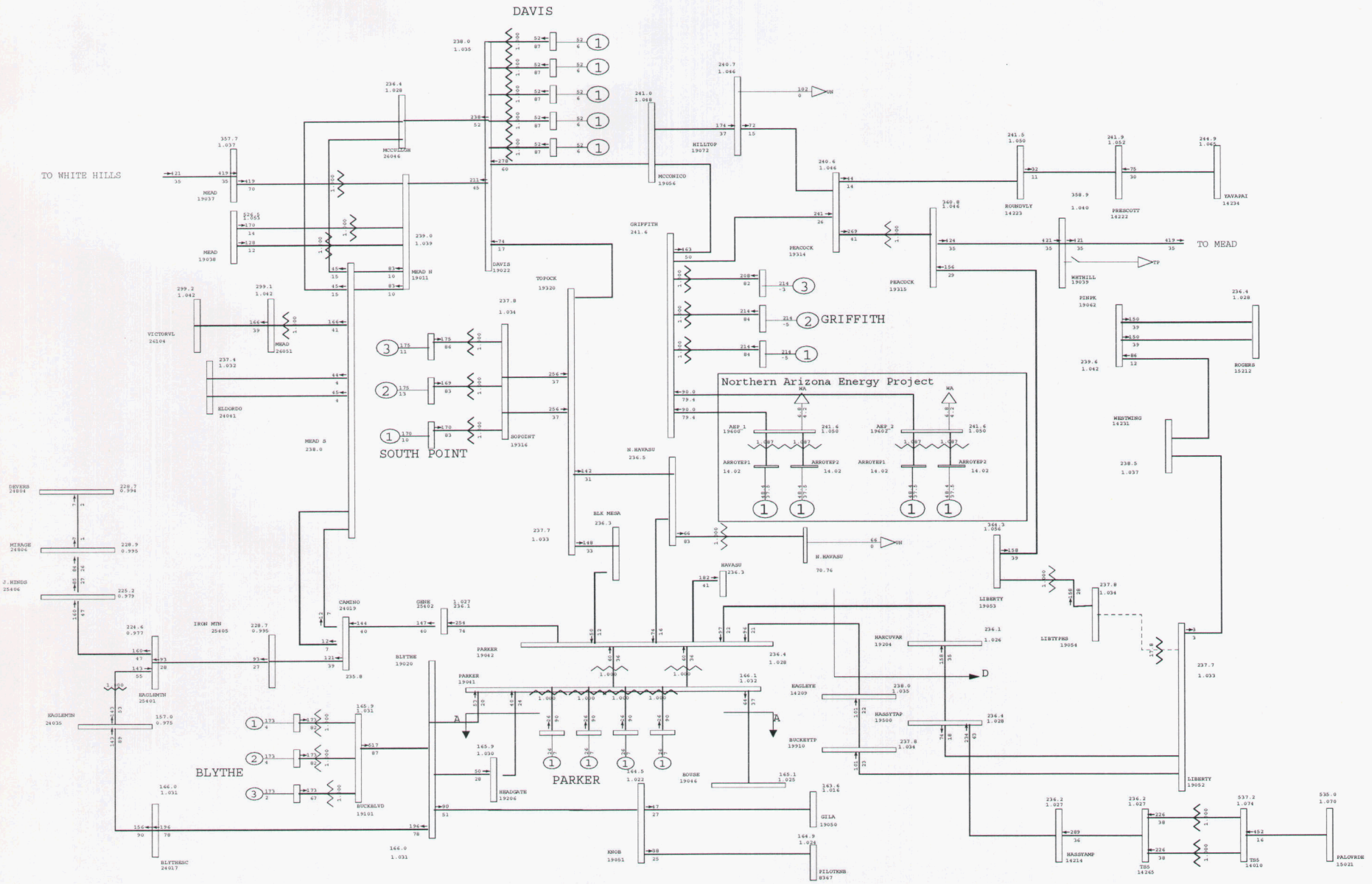

General Electric International, Inc. PSLF Program Thu Jul 19 15:18:40 2007 C:upslf16MyPSLF 8ha_pst_maxAI-LibBP-rev1.sav

	2008 HEAVY AUTUMN, NORTHERN ARIZONA ENERGY PROJECT, POST-PROJECT - Area Interch CASE: 08ha_pst_maxAI-LibBP-rev1.sav EOR=9300MW, Maximum WAPA-DSW Generation Modeled.	Plot 35 - 2008 Heavy Autumn Normal Conditions - After Project, Max WAPA Gen, Ar	MW/% rate C:upslf16MyPSLF iver2-na Rating = 1

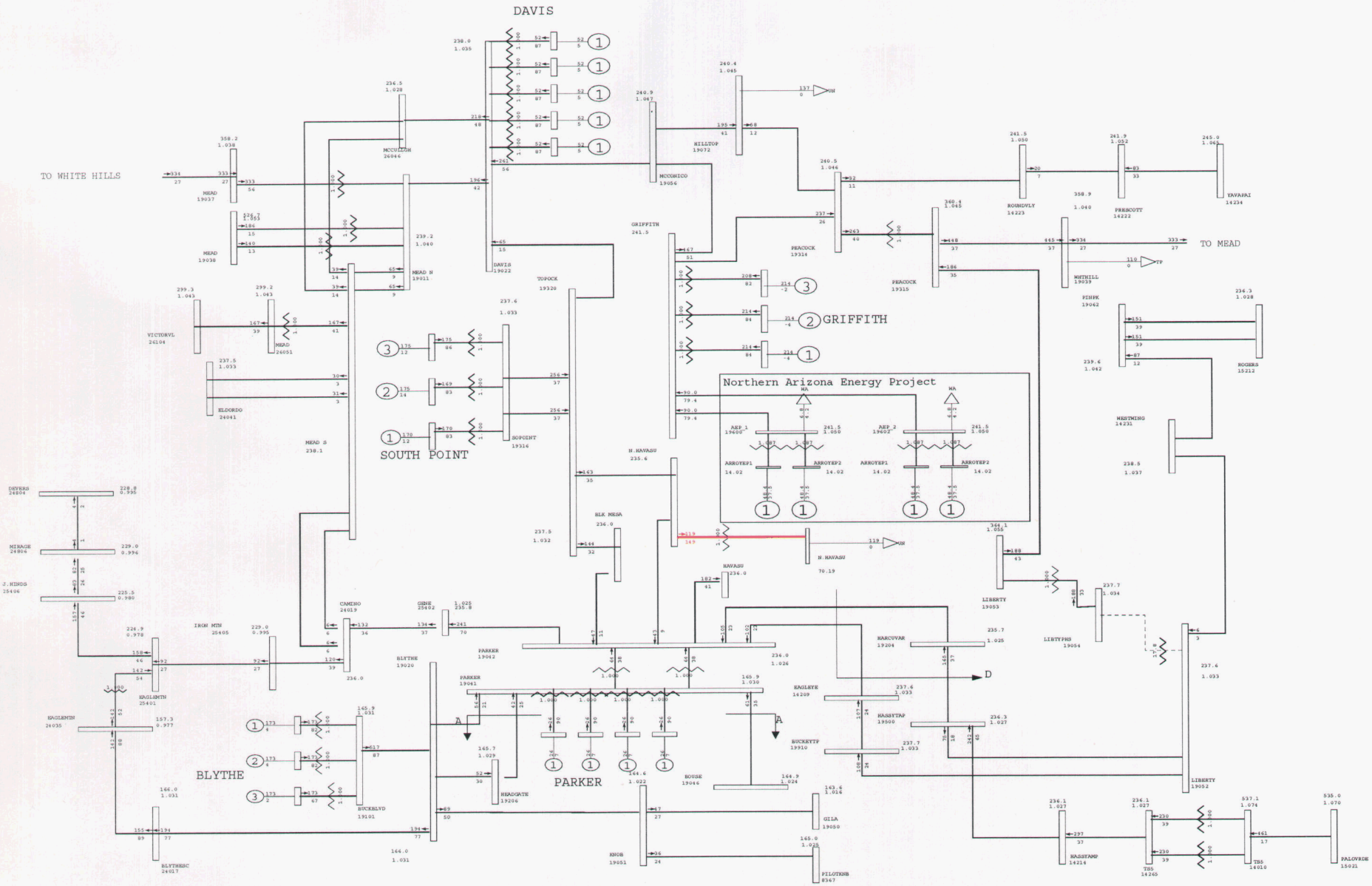

General Electric International, Inc. PSLF Program Thu Jul 19 15:18:42 2007 C:upslf16MyPSLF 8ha_pst_maxLD-LibBP-rev1.sav

	2008 HEAVY AUTUMN, NORTHERN ARIZONA ENERGY PROJECT, POST-PROJECT - UNS Load Inc CASE: 08ha_pst_maxLD-LibBP-rev1.sav EOR=9300MW, Maximum WAPA-DSW Generation Modeled.	Plot 36 - 2008 Heavy Autumn Normal Conditions - After Project, Max WAPA Gen, Lo	MW/% rate C:upslf16MyPSLF iver2-na Rating = 1

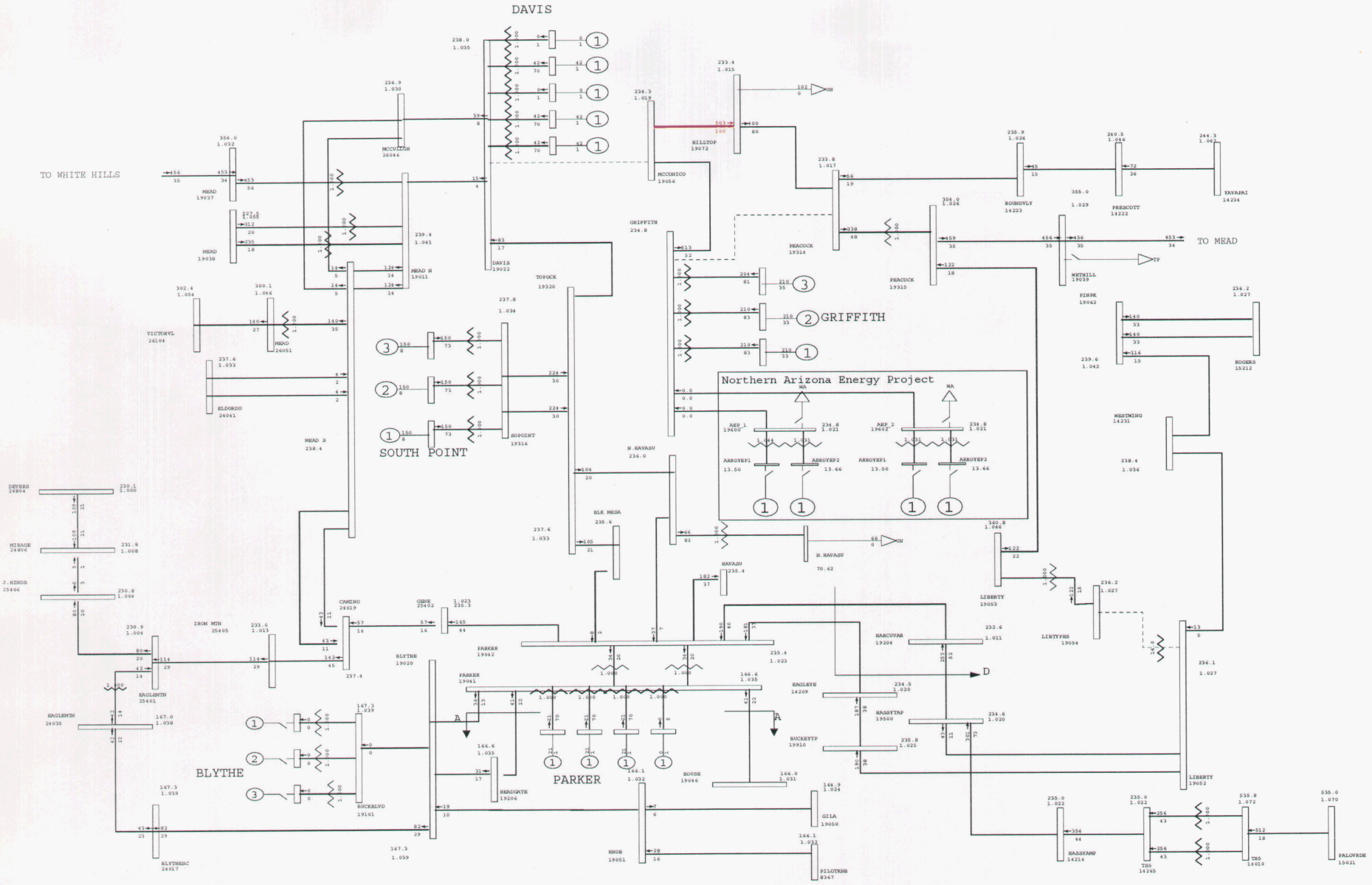

General Electric International, Inc. PSLF Program Thu Jul 19 15:18:44 2007 C:upslf16MyPSLF 8ha_pre-LibBP-rev1.sav

	2008 HEAVY AUTUMN, NORTHERN ARIZONA ENERGY PROJECT, PRE-PROJECT	Plot 37 - 2008 Heavy Autumn - Before Project, min WAPA Gen	MW/% rate
	CASE: 08ha_pre-rev1.sav	Outage: Griffith-Peacock & Davis-McConnico 230kV Lines	C:upslf16MyPSLF iver2-na
	EOR=9300MW, Min WAPA-DSW Generation Modeled.		Rating = 2

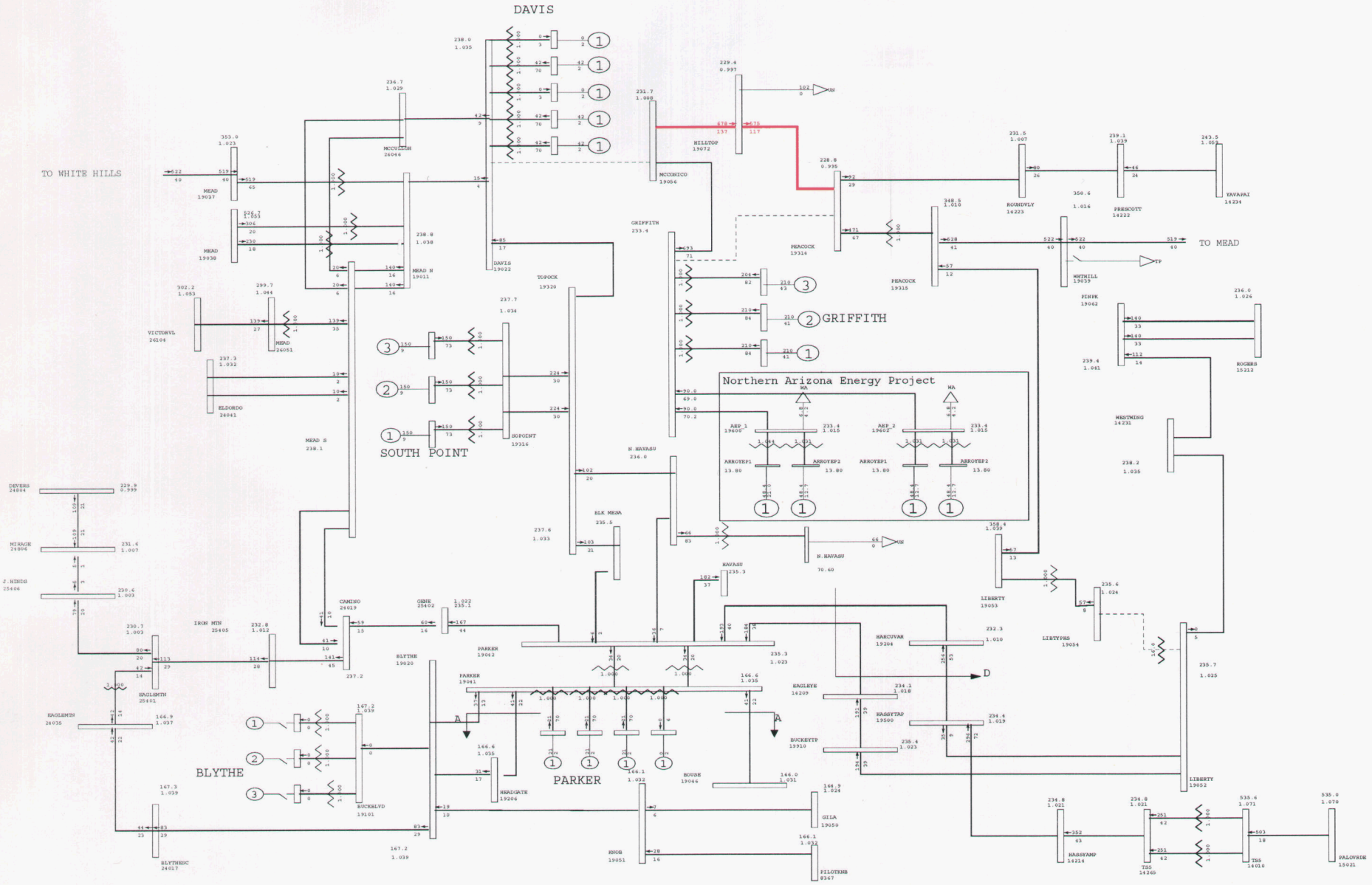

General Electric International, Inc. PSLF Program Thu Jul 19 15:18:48 2007 C:upslf16MyPSLF 8ha_pst_AI-LibBP-rev1.sav

	2008 HEAVY AUTUMN, NORTHERN ARIZONA ENERGY PROJECT, POST-PROJECT - Area Interch	Plot 38 - 2008 Heavy Autumn - After Project, min WAPA Gen, Area Interchange	MW/% rate
	CASE: 08ha_pst_AI-LibBP-rev1.sav	Outage: Griffith-Peacock & Davis-McConnico 230kV Lines	C:upslf16MyPSLF iver2-na
	EOR=9300MW, Minimum WAPA-DSW Generation Modeled.		Rating = 2

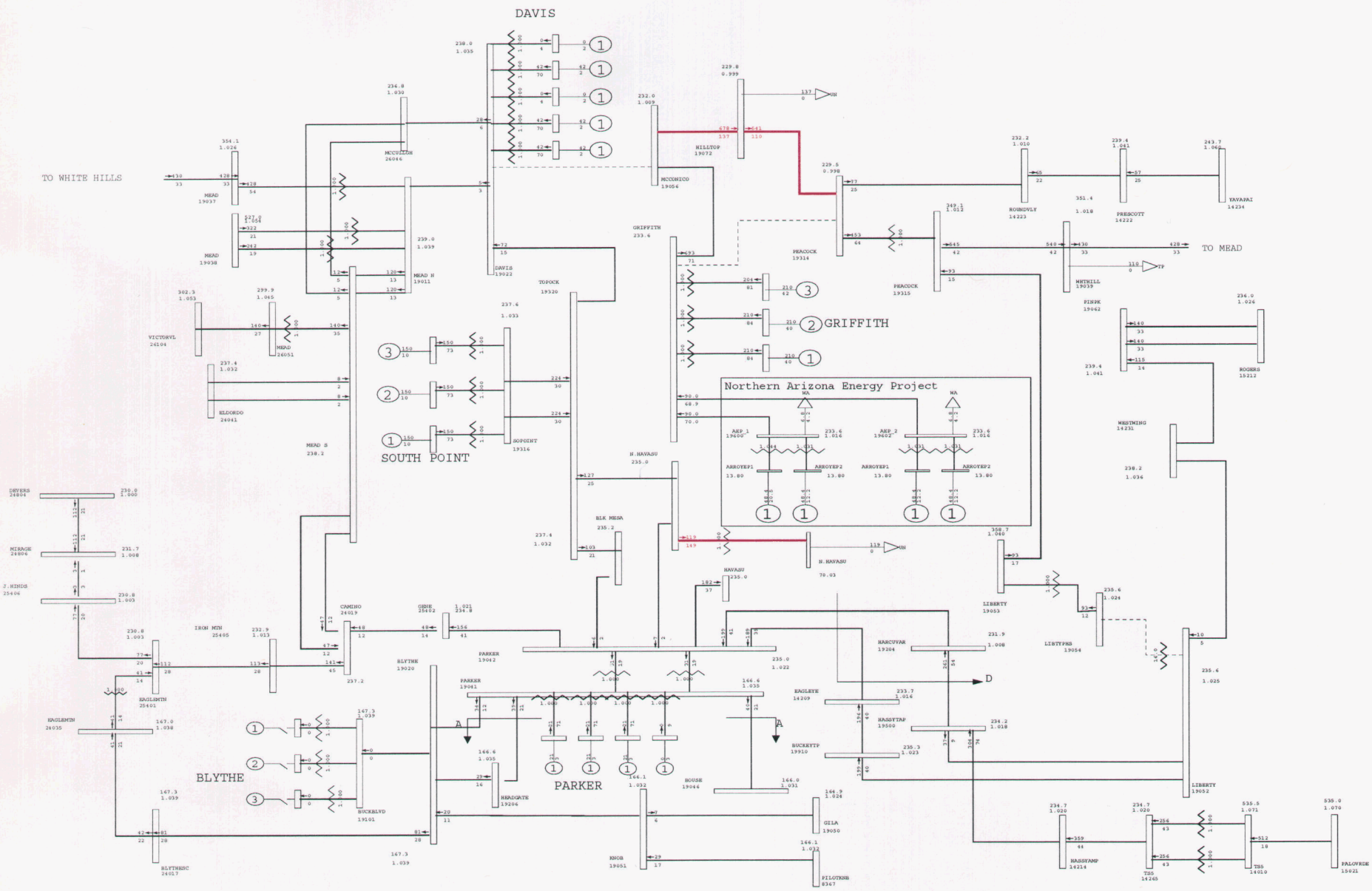

General Electric International, Inc. PSLF Program Thu Jul 19 15:18:52 2007 C:upslf16MyPSLF 8ha_pst_LD-LibBP-rev1.sav

2008 HEAVY AUTUMN, NORTHERN ARIZONA ENERGY PROJECT, POST-PROJECT - UNS Load Inc CASE: 08ha_pst_LD-LibBP-rev1.sav EOR=9300MW, Minimum WAPA-DSW Generation Modeled.	Plot 39 - 2008 Heavy Autumn - After Project, min WAPA Gen, Regional Load Outage: Griffith-Peacock & Davis-McConnico 230kV Lines	MW/% rate C:upslf16MyPSLF iver2-na Rating = 2

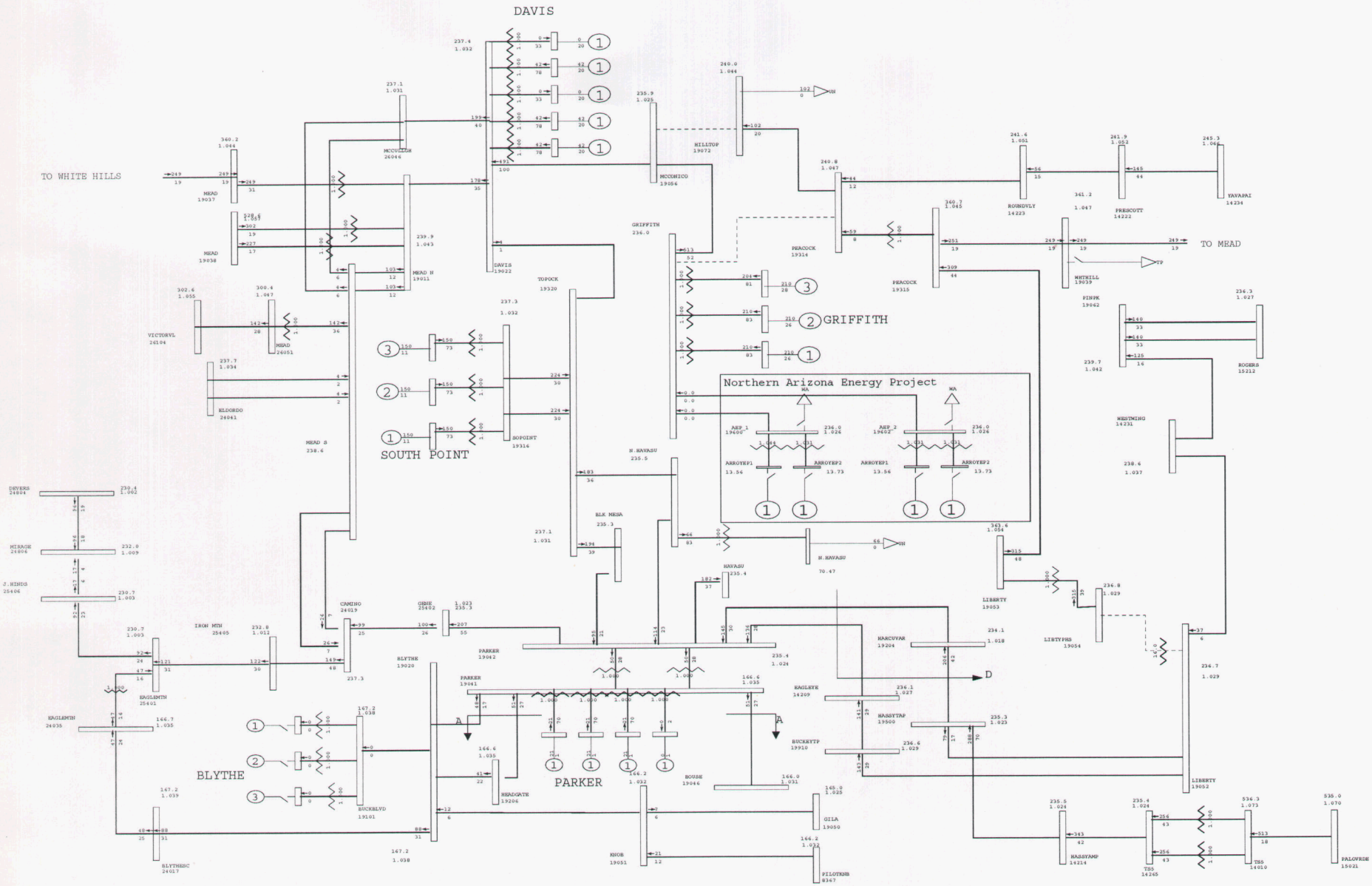

General Electric International, Inc. PSLF Program Thu Jul 19 15:18:54 2007 C:upslf16MyPSLF 8ha_pre-LibBP-rev1.sav

	2008 HEAVY AUTUMN, NORTHERN ARIZONA ENERGY PROJECT, PRE-PROJECT CASE: 08ha_pre-rev1.sav EOR=9300MW, Min WAPA-DSW Generation Modeled.	Plot 40 - 2008 Heavy Autumn - Before Project, min WAPA Gen Outage: Griffith-Peacock & Hilltop-McConnico 230kV Lines	MW/% rate C:upslf16MyPSLF iver2-na Rating = 2

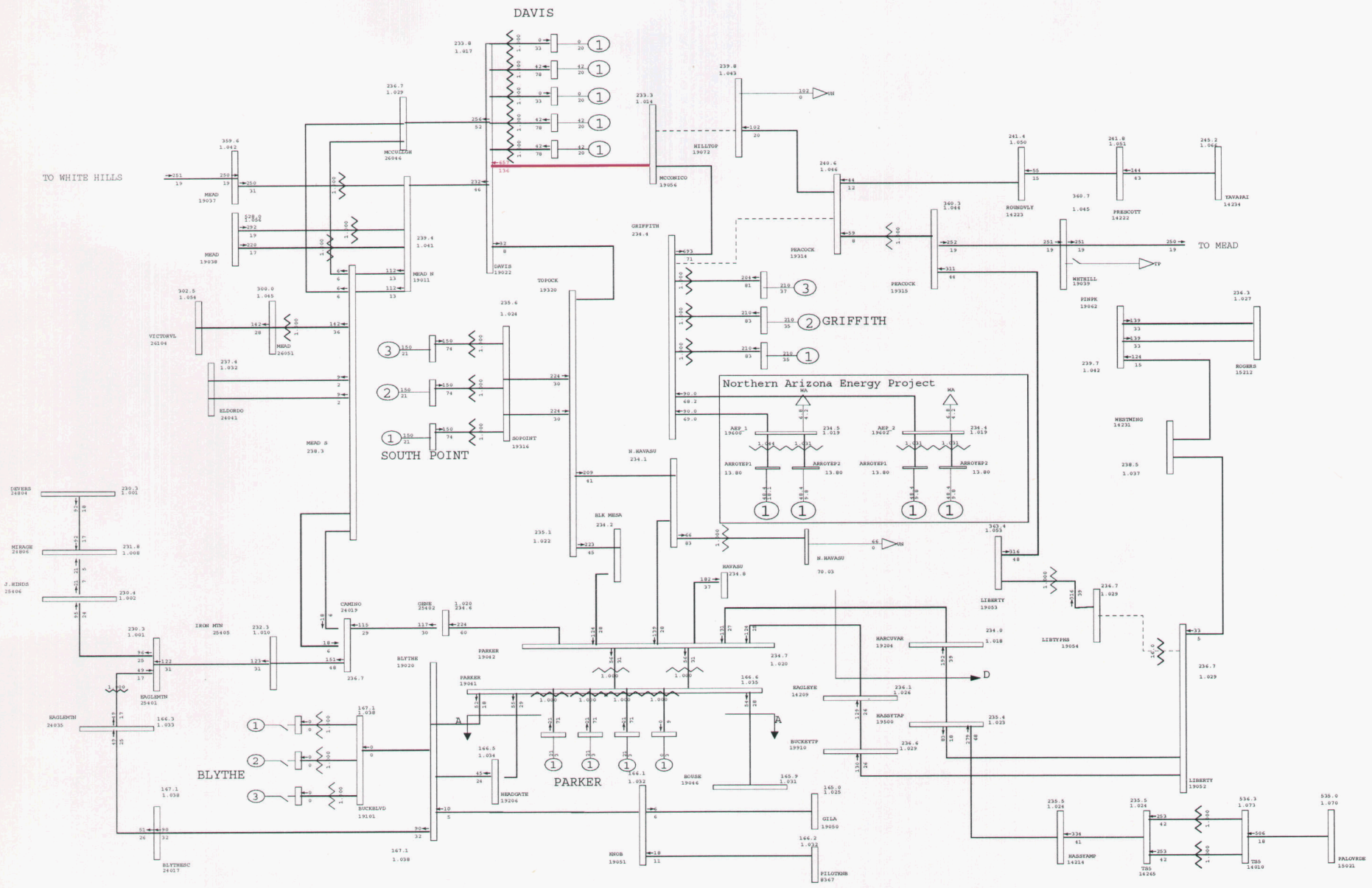

General Electric International, Inc. PSLF Program Thu Jul 19 15:18:56 2007 C:upslf16MyPSLF 8ha_pst_AI-LibBP-rev1.sav

2008 HEAVY AUTUMN, NORTHERN ARIZONA ENERGY PROJECT, POST-PROJECT - Area Interch CASE: 08ha_pst_AI-LibBP-rev1.sav EOR=9300MW, Minimum WAPA-DSW Generation Modeled.	Plot 41 - 2008 Heavy Autumn - After Project, min WAPA Gen, Area Interchange Outage: Griffith-Peacock & Hilltop-McConnico 230kV Lines	MW/% rate C:upslf16MyPSLF iver2-na Rating = 2

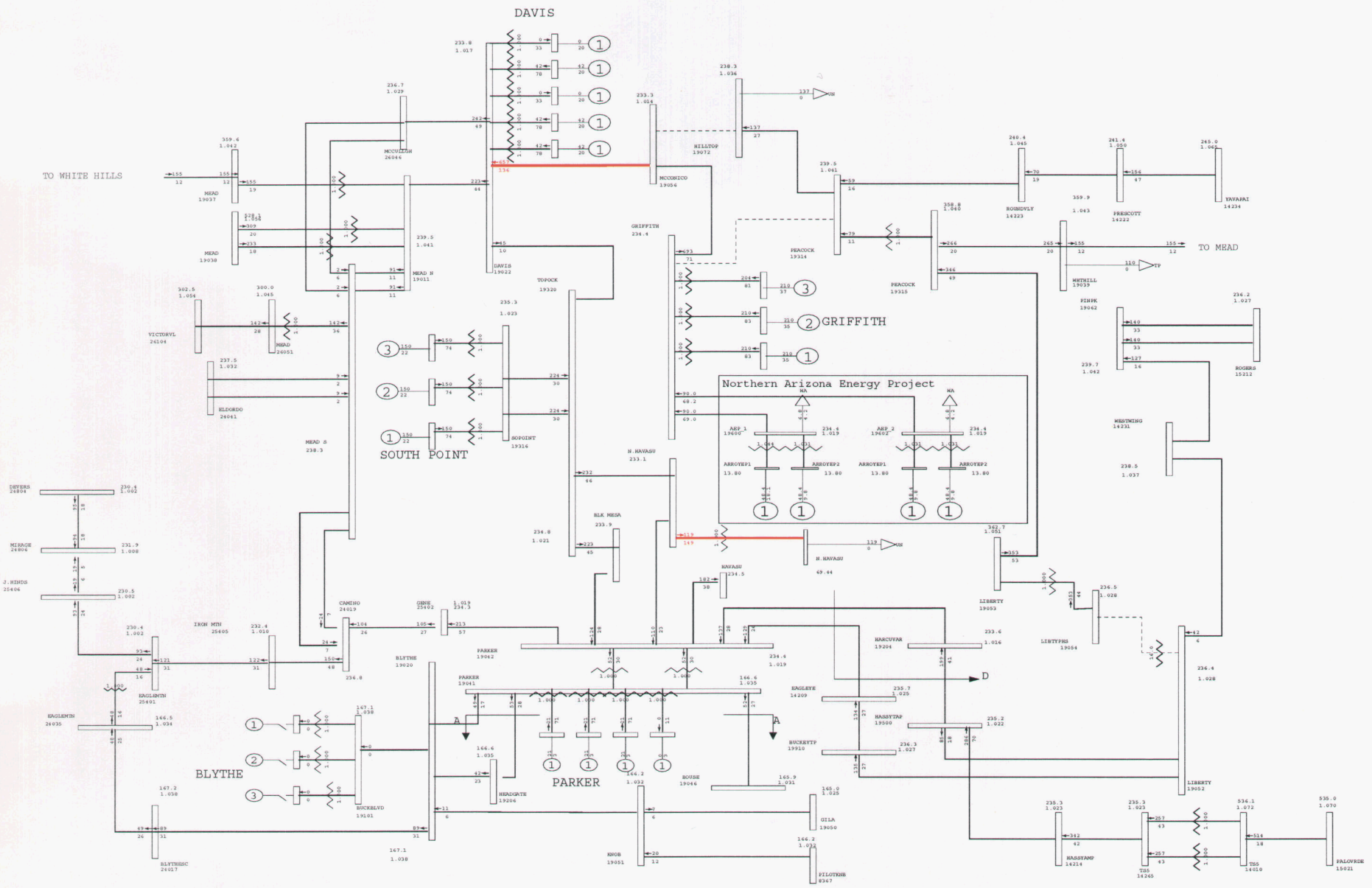

General Electric International, Inc. PSLF Program Thu Jul 19 15:18:58 2007 C:upslf16MyPSLF 8ha_pst_LD-LibBP-rev1.sav

2008 HEAVY AUTUMN, NORTHERN ARIZONA ENERGY PROJECT, POST-PROJECT - UNS Load Inc	Plot 42 - 2008 Heavy Autumn - After Project, min WAPA Gen, Regional Load	MW/% rate
CASE: 08ha_pst_LD-LibBP-rev1.sav	Outage: Griffith-Peacock & Hilltop-McConnico 230kV Lines	C:upslf16MyPSLF iver2-na
EOR=9300MW, Minimum WAPA-DSW Generation Modeled.		Rating = 2

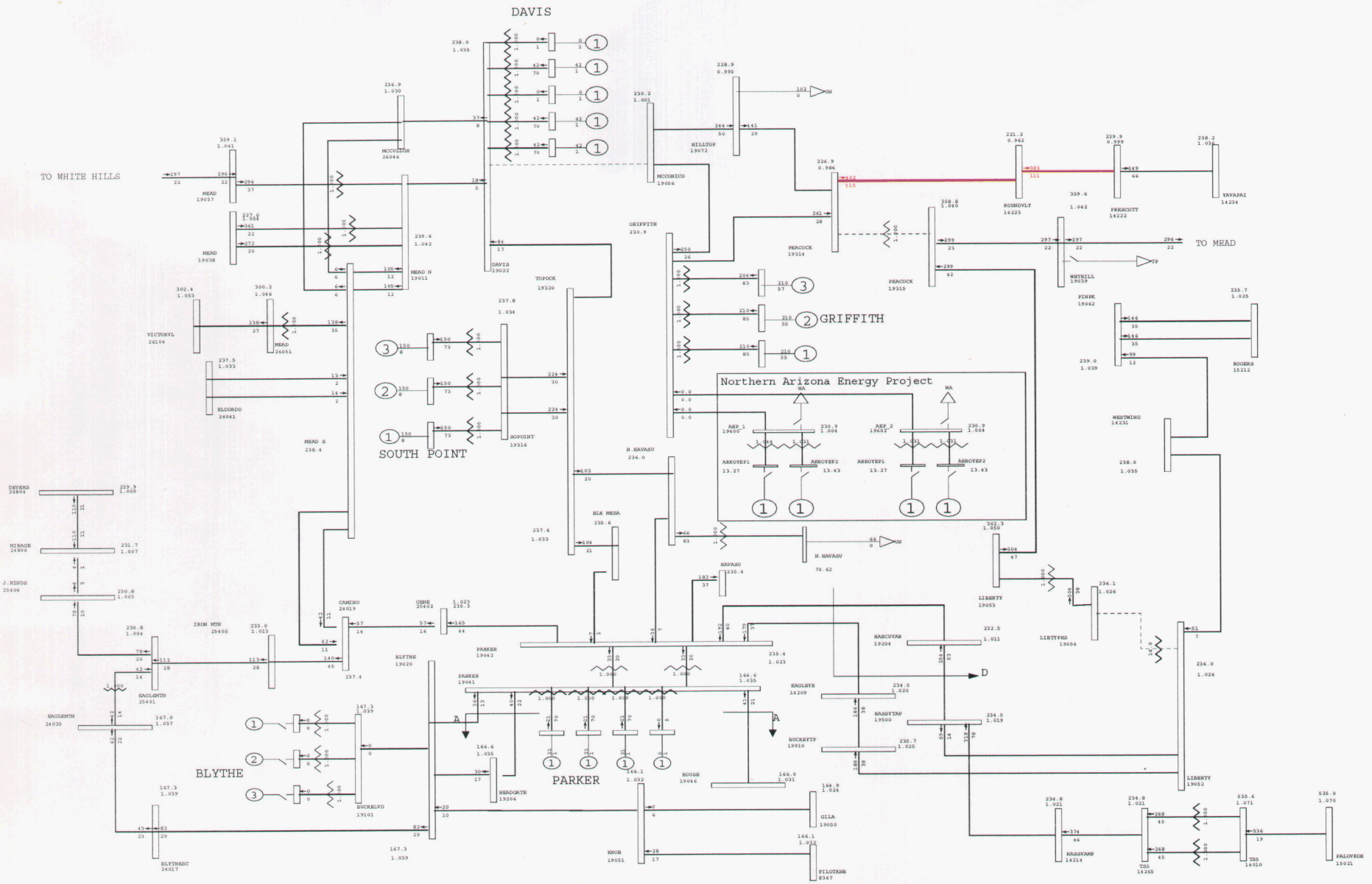

General Electric International, Inc. PSLF Program Thu Jul 19 15:19:02 2007 C:upslf16MyPSLF 8ha_pre-LibBP-rev1.sav

	2008 HEAVY AUTUMN, NORTHERN ARIZONA ENERGY PROJECT, PRE-PROJECT	Plot 43 - 2008 Heavy Autumn - Before Project, min WAPA Gen	MW/% rate
	CASE: 08ha_pre-rev1.sav	Outage: Peacock 345/230 Tran & Davis-McConnico 230kV Line	C:upslf16MyPSLF iver2-na
	EOR=9300MW, Min WAPA-DSW Generation Modeled.		Rating = 2

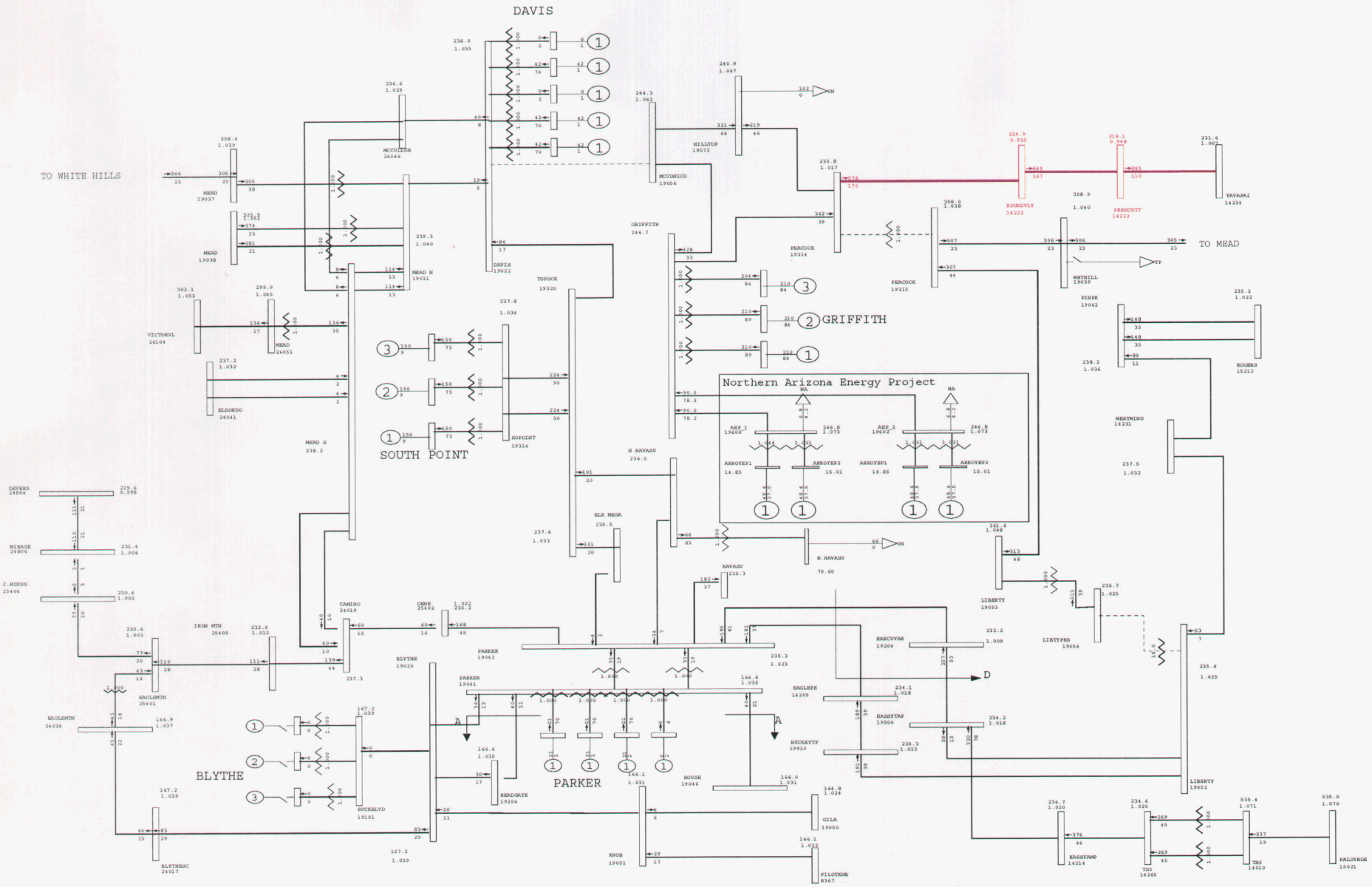

General Electric International, Inc. PSLF Program Thu Jul 19 15:19:08 2007 C:upslf16MyPSLF 8ha_pst_AI-LibBP-rev1.sav

	2008 HEAVY AUTUMN, NORTHERN ARIZONA ENERGY PROJECT, POST-PROJECT - Area Interch	Plot 44 - 2008 Heavy Autumn - After Project, min WAPA Gen, Area Interchange	MW/% rate
	CASE: 08ha_pst_AI-LibBP-rev1.sav	Outage: Peacock 345/230 Tran & Davis-McConnico 230kV Line	C:upslf16MyPSLF iver2-na
	EOR=9300MW, Minimum WAPA-DSW Generation Modeled.		Rating = 2

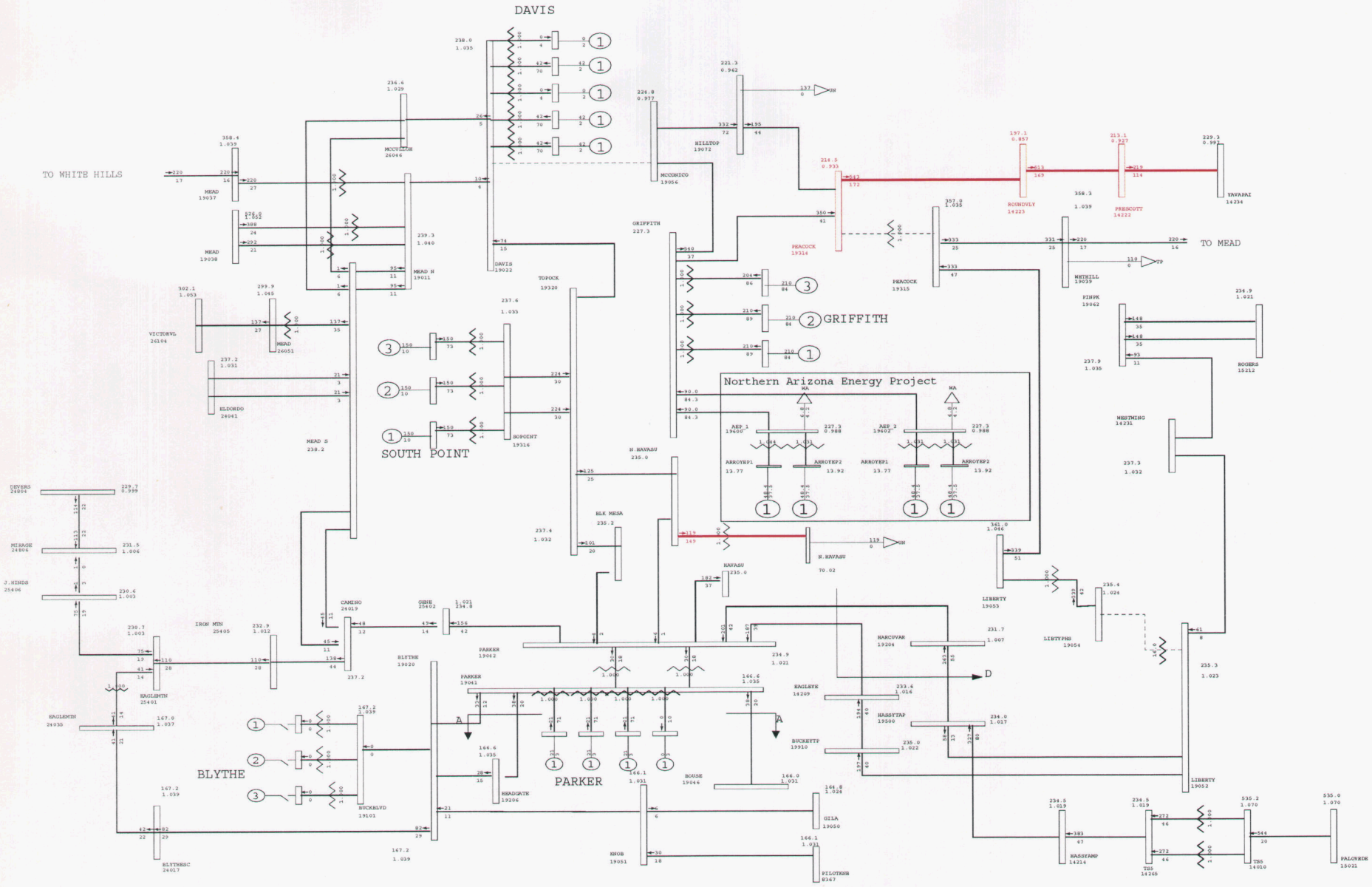

General Electric International, Inc. PSLF Program Thu Jul 19 15:19:13 2007 C:upslf16MyPSLF 8ha_pst_LD-LibBP-rev1.sav

2008 HEAVY AUTUMN, NORTHERN ARIZONA ENERGY PROJECT, POST-PROJECT - UNS Load Inc CASE: 08ha_pst_LD-LibBP-rev1.sav EOR=9300MW, Minimum WAPA-DSW Generation Modeled.	Plot 45 - 2008 Heavy Autumn - After Project, min WAPA Gen, Regional Load Outage: Peacock 345/230 Tran & Davis-McConnico 230kV Line	MW/% rate C:upslf16MyPSLF iver2-na Rating = 2

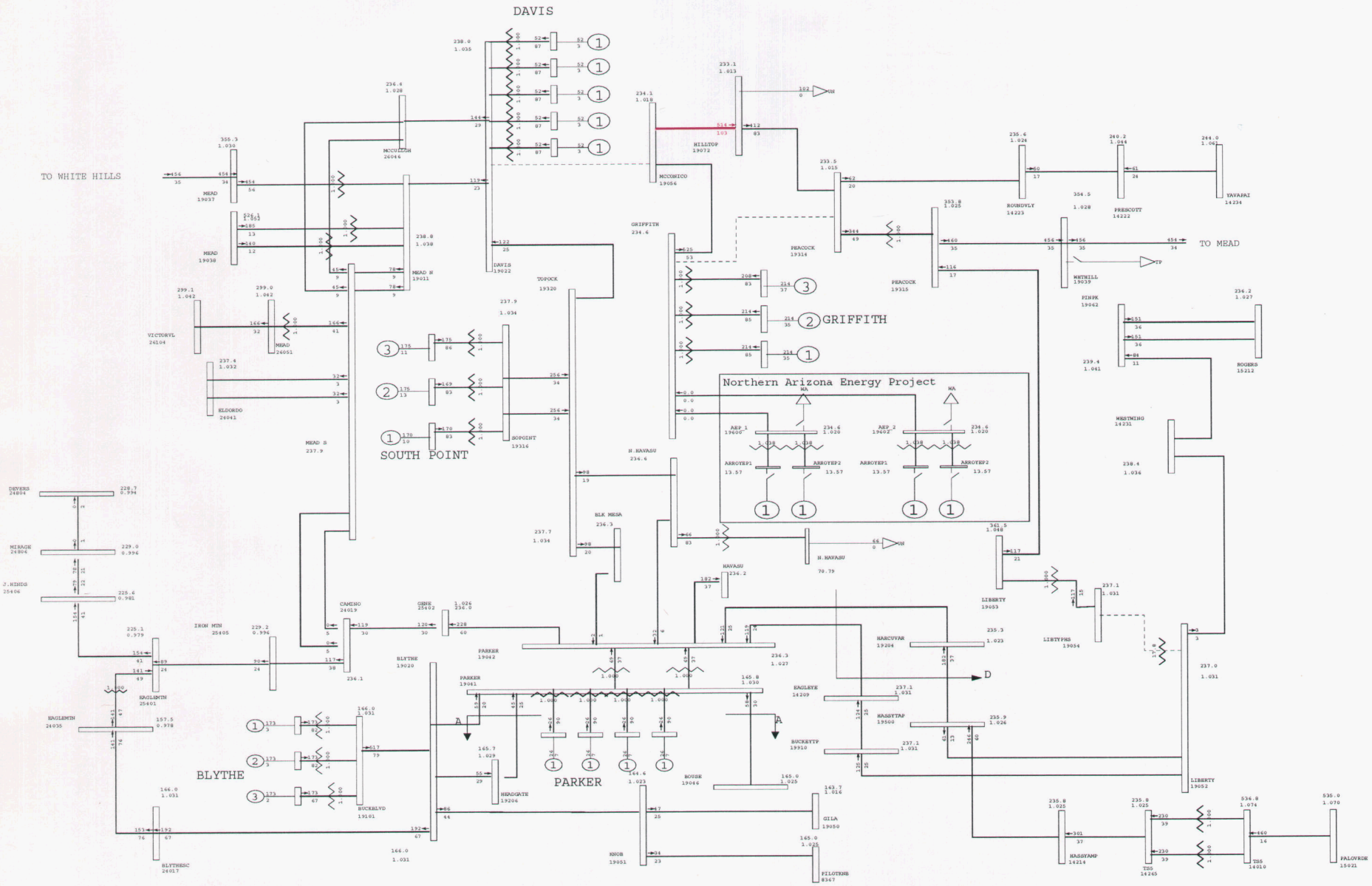

General Electric International, Inc. PSLF Program Thu Jul 19 15:19:16 2007 C:upslf16MyPSLF 8ha_pre_max-LibBP-rev1.sav

	2008 HEAVY AUTUMN, NORTHERN ARIZONA ENERGY PROJECT, PRE-PROJECT	Plot 46 - 2008 Heavy Autumn - Before Project, max WAPA Gen	MW/% rate
	CASE: 08ha_pre_max-LibBP-rev1.sav	Outage: Griffith-Peacock & Davis-McConnico 230kV Lines	C:upslf16MyPSLF iver2-na
	EOR=9300MW, Maximum WAPA-DSW Generation Modeled.		Rating = 2

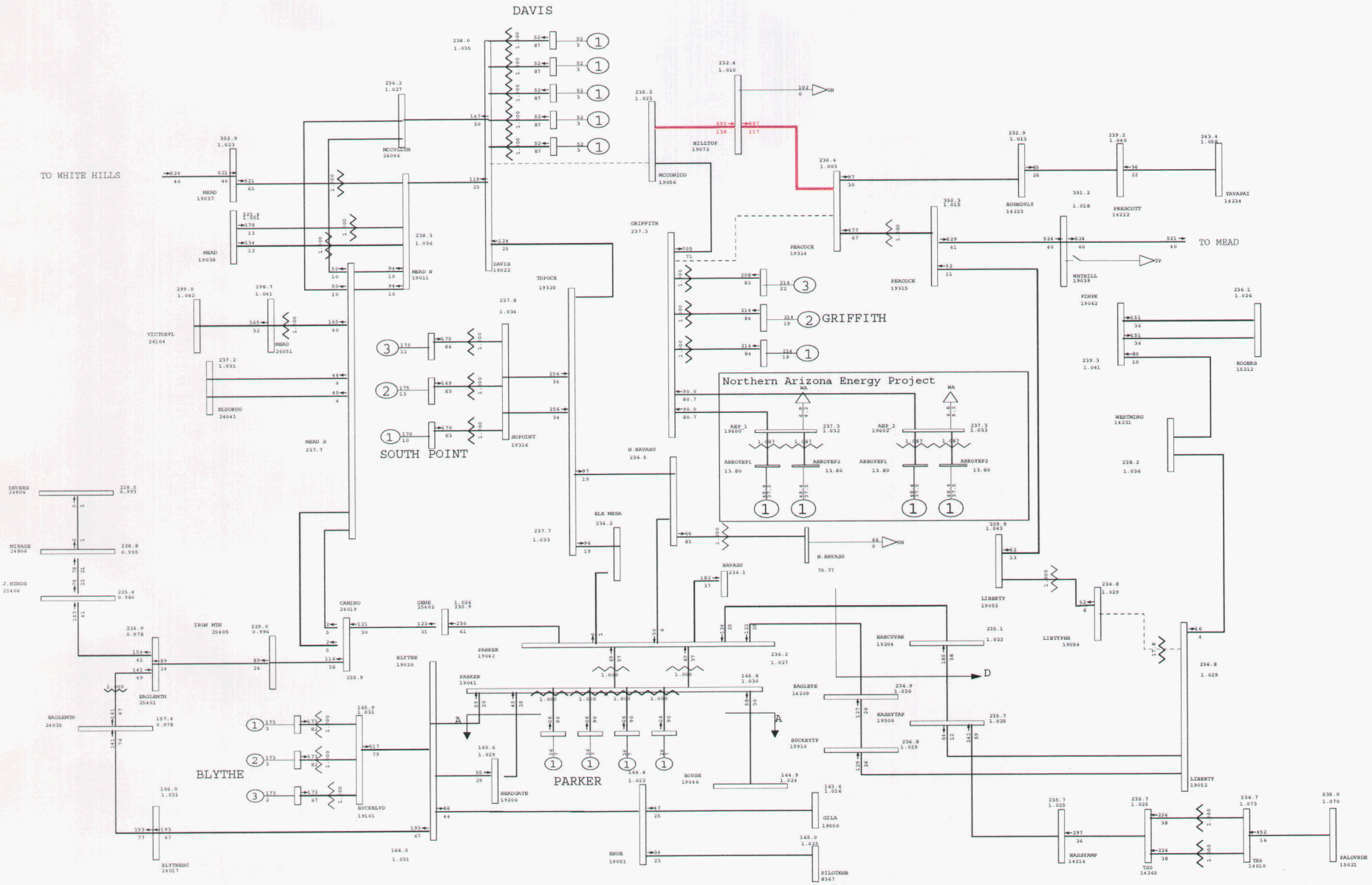

General Electric International, Inc. PSLF Program Thu Jul 19 15:19:23 2007 C:upslf16MyPSLF 8ha_pst_maxAI-LibBP-rev1.sav

	2008 HEAVY AUTUMN, NORTHERN ARIZONA ENERGY PROJECT, POST-PROJECT - Area Interch	Plot 47 - 2008 Heavy Autumn - After Project, max WAPA Gen, Area Interchange	MW/% rate
	CASE: 08ha_pst_maxAI-LibBP-rev1.sav	Outage: Griffith-Peacock & Davis-McConnico 230kV Lines	C:upslf16MyPSLF iver2-na
	EOR=9300MW, Maximum WAPA-DSW Generation Modeled.		Rating = 2

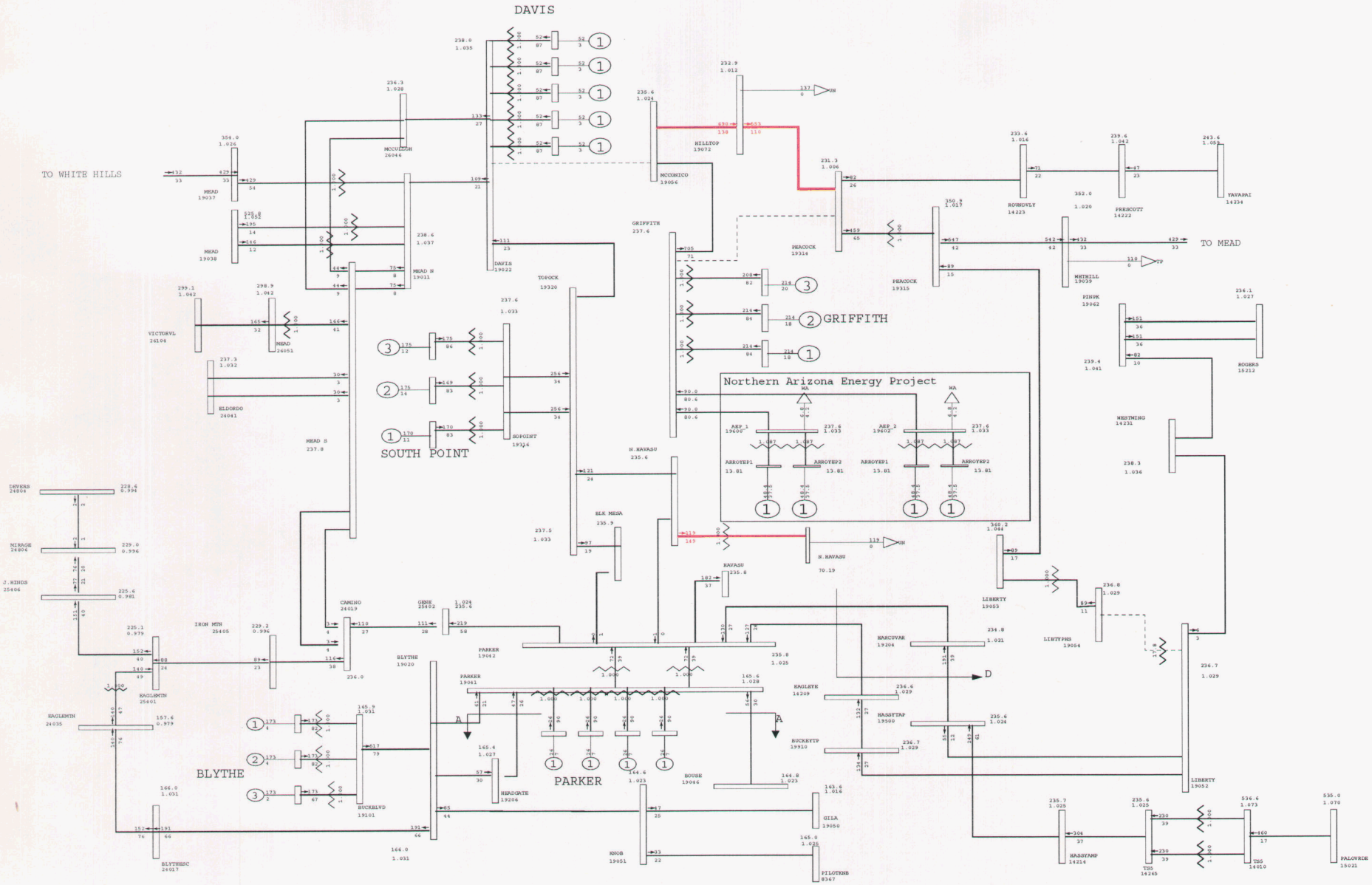

General Electric International, Inc. PSLF Program Thu Jul 19 15:19:31 2007 C:upslf16MyPSLF 8ha_pst_maxLD-LibBP-rev1.sav

2008 HEAVY AUTUMN, NORTHERN ARIZONA ENERGY PROJECT, POST-PROJECT - UNS Load Inc CASE: 08ha_pst_maxLD-LibBP-rev1.sav EOR=9300MW, Maximum WAPA-DSW Generation Modeled.	Plot 48 - 2008 Heavy Autumn - After Project, max WAPA Gen, Regional Load Outage: Griffith-Peacock & Davis-McConnico 230kV Lines	MW/% rate C:upslf16MyPSLF iver2-na Rating = 2

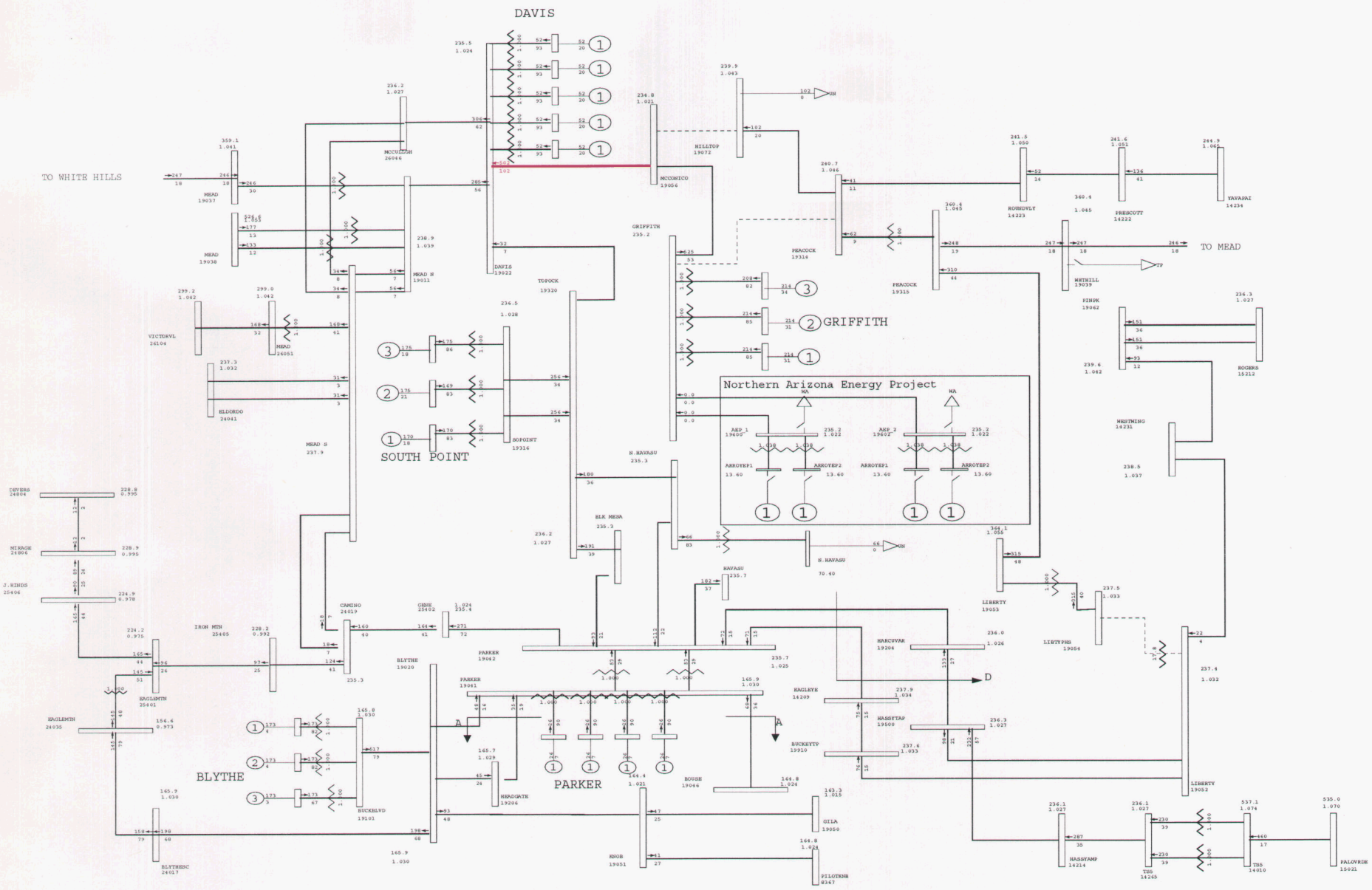

General Electric International, Inc. PSLF Program Thu Jul 19 15:25:24 2007 C:upslf16MyPSLF 8ha_pre_max-LibBP-rev1.sav

2008 HEAVY AUTUMN, NORTHERN ARIZONA ENERGY PROJECT, PRE-PROJECT CASE: 08ha_pre_max-LibBP-rev1.sav EOR=9300MW, Maximum WAPA-DSW Generation Modeled.	Plot 49 - 2008 Heavy Autumn - Before Project, max WAPA Gen Outage: Griffith-Peacock & Hilltop-McConnico 230kV Lines	MW/% rate C:upslf16MyPSLF iver2-na Rating = 2

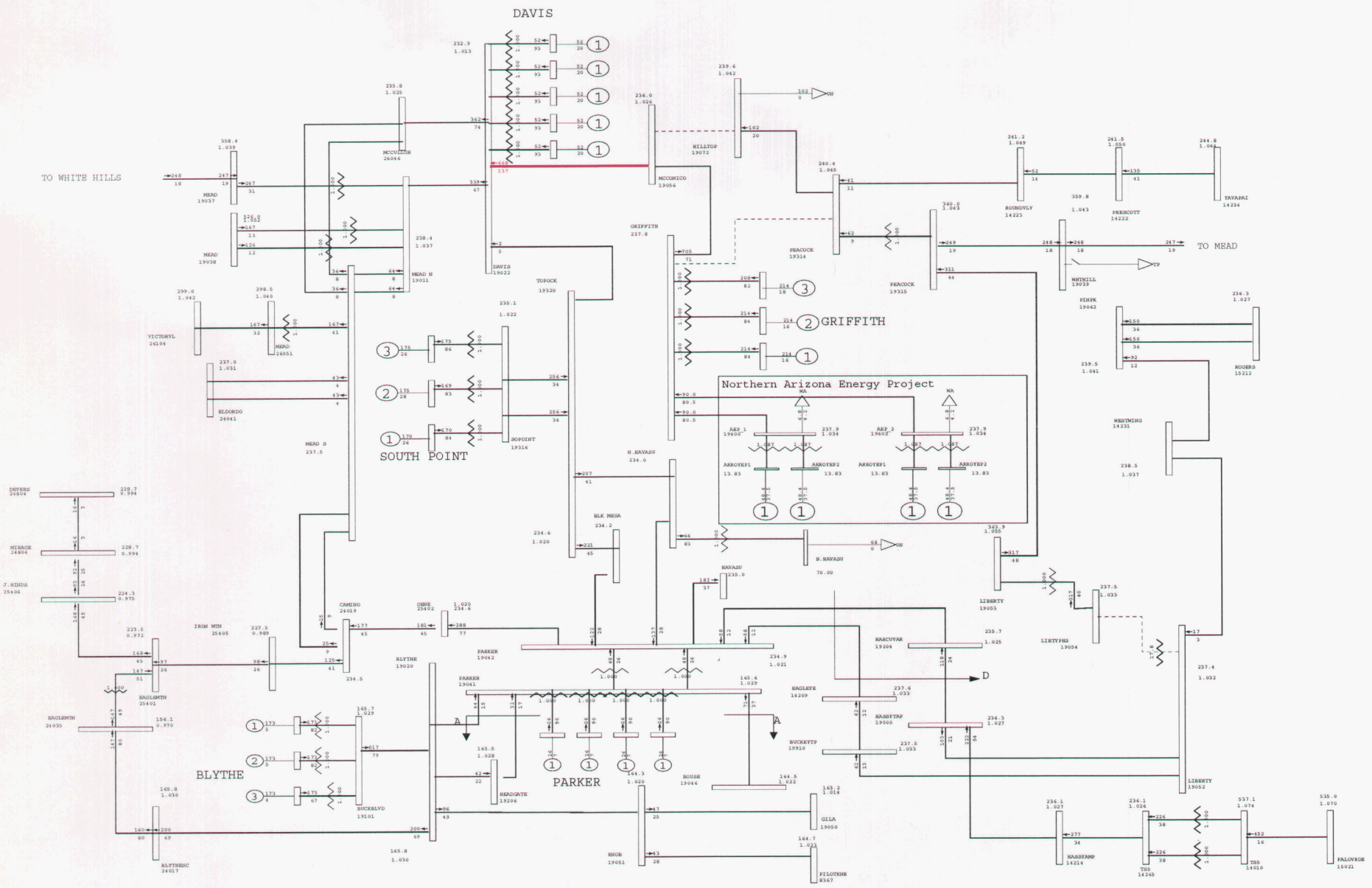

General Electric International, Inc. PSLF Program Thu Jul 19 15:19:36 2007 C:upslf16MyPSLF 8ha_pst_maxAI-LibBP-rev1.sav

2008 HEAVY AUTUMN, NORTHERN ARIZONA ENERGY PROJECT, POST-PROJECT - Area Interch CASE: 08ha_pst_maxAI-LibBP-rev1.sav EOR=9300MW, Maximum WAPA-DSW Generation Modeled.	Plot 50 - 2008 Heavy Autumn - After Project, max WAPA Gen, Area Interchange Outage: Griffith-Peacock & Hilltop-McConnico 230kV Lines	MW/% rate C:upslf16MyPSLF iver2-na Rating = 2

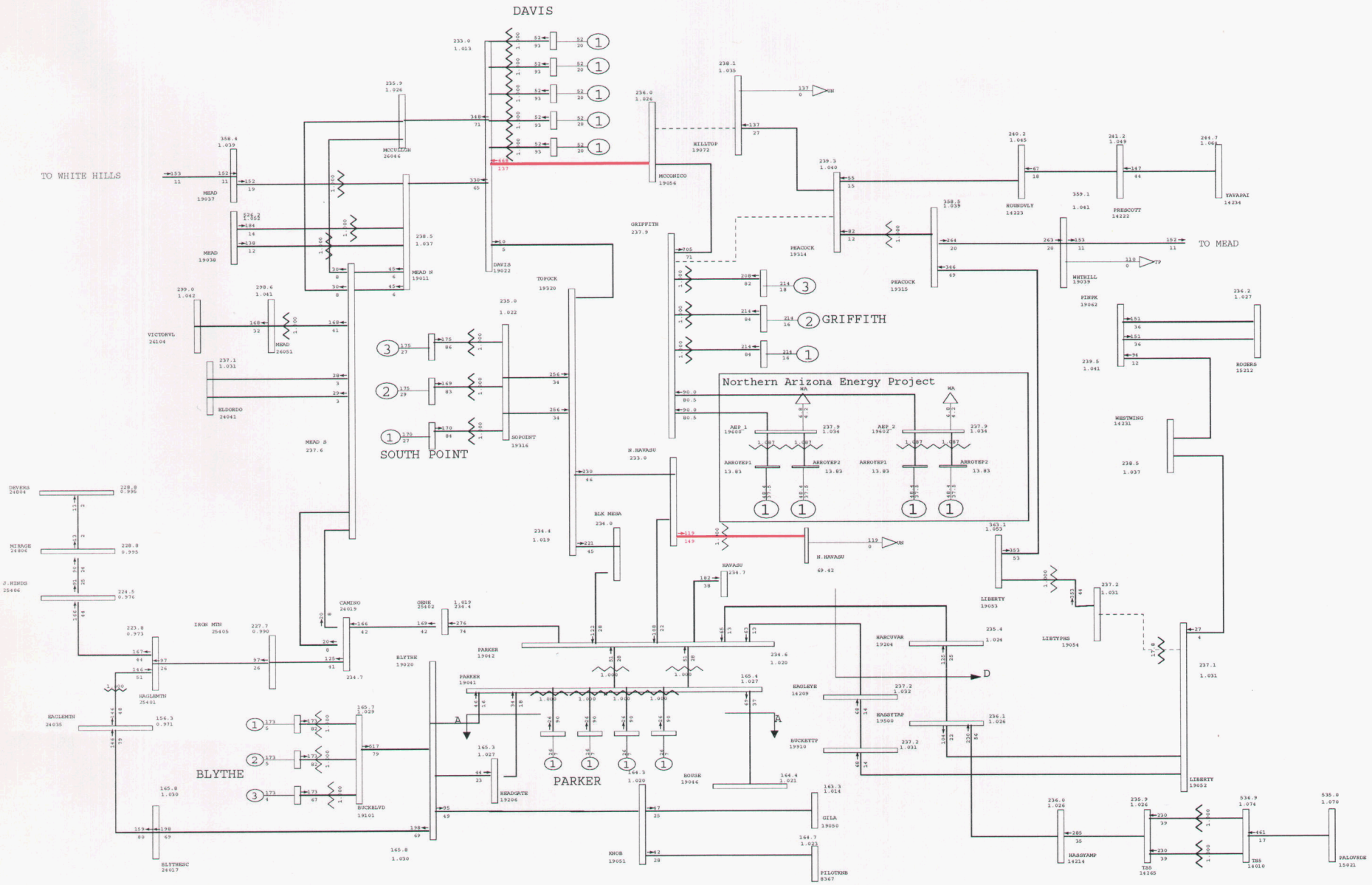

General Electric International, Inc. PSLF Program Thu Jul 19 15:19:38 2007 C:upslf16MyPSLF 8ha_pst_maxLD-LibBP-rev1.sav

	2008 HEAVY AUTUMN, NORTHERN ARIZONA ENERGY PROJECT, POST-PROJECT - UNS Load Inc	Plot 51 - 2008 Heavy Autumn - After Project, max WAPA Gen, Regional Load	MW/% rate
	CASE: 08ha_pst_maxLD-LibBP-rev1.sav	Outage: Griffith-Peacock & Hilltop-McConnico 230kV Lines	C:upslf16MyPSLF iver2-na
	EOR=9300MW, Maximum WAPA-DSW Generation Modeled.		Rating = 2

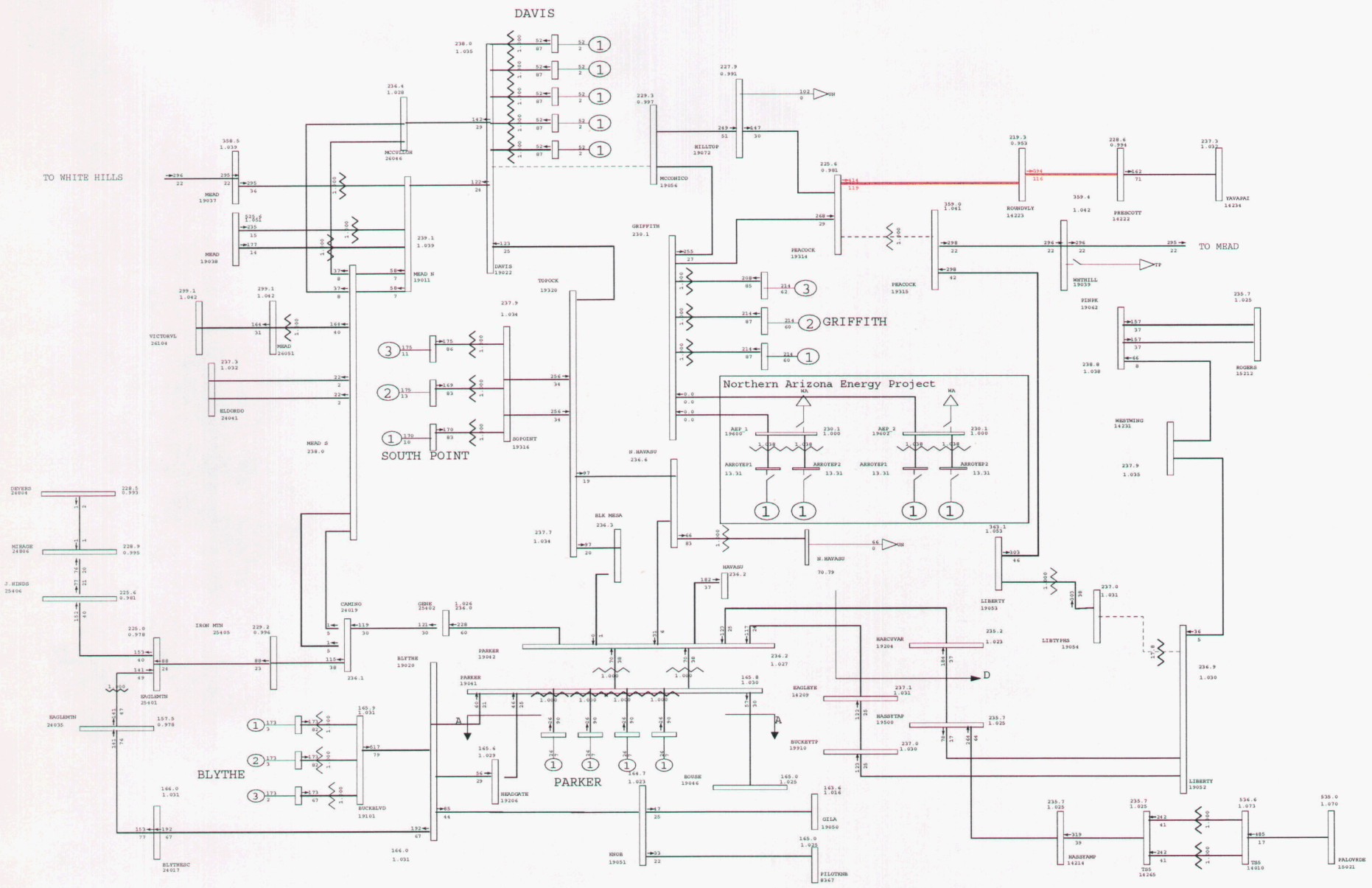

General Electric International, Inc. PSLF Program Thu Jul 19 15:19:42 2007 C:upslf16MyPSLF 8ha_pre_max-LibBP-rev1.sav

2008 HEAVY AUTUMN, NORTHERN ARIZONA ENERGY PROJECT, PRE-PROJECT CASE: 08ha_pre_max-LibBP-rev1.sav EOR=9300MW, Maximum WAPA-DSW Generation Modeled.	Plot 52 - 2008 Heavy Autumn - Before Project, max WAPA Gen Outage: Peacock 345/230 Tran & Davis-McConnico 230kV Line	MW/% rate C:upslf16MyPSLF iver2-na Rating = 2

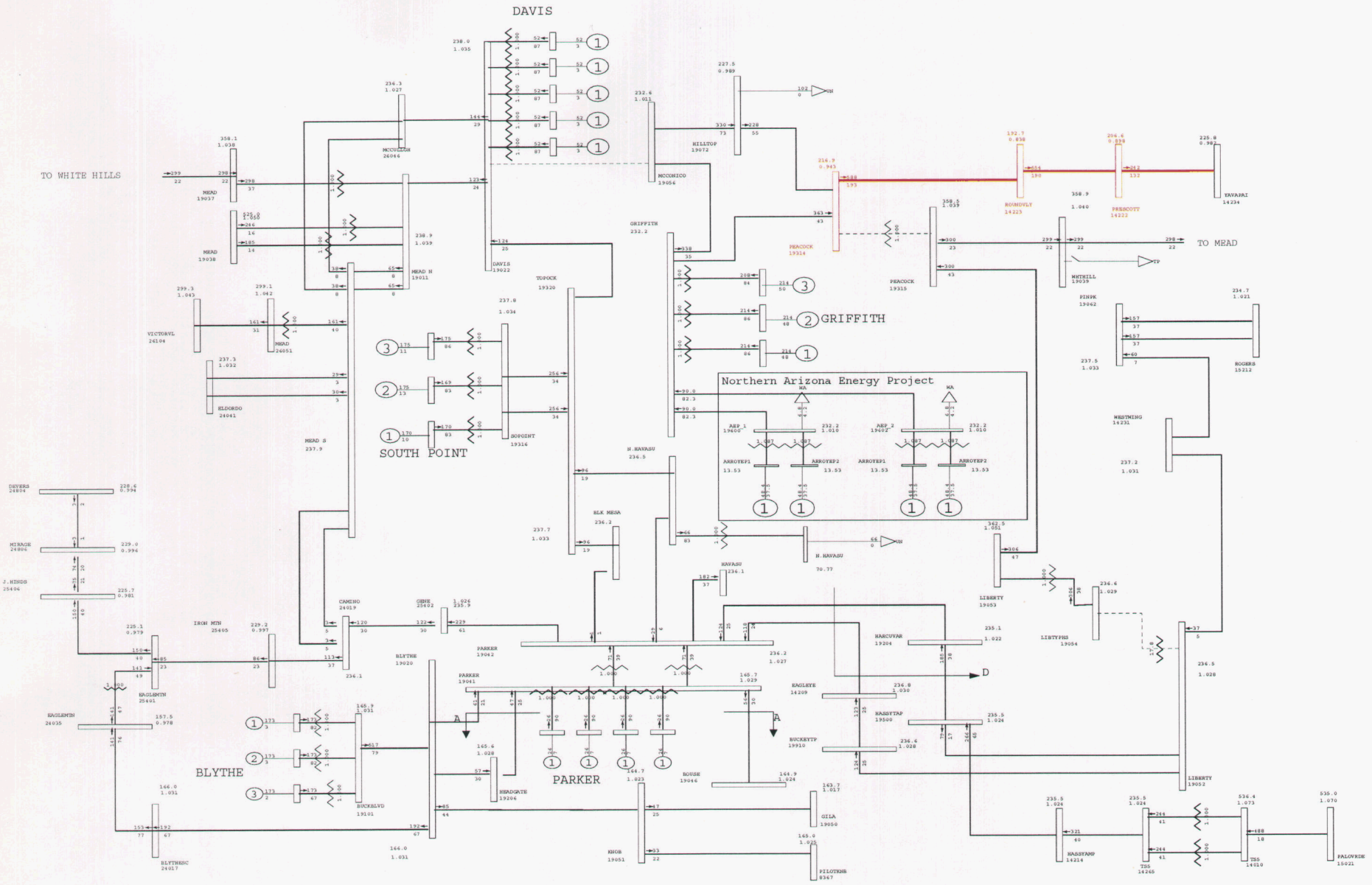

General Electric International, Inc. PSLF Program Thu Jul 19 15:19:47 2007 C:upslf16MyPSLF 8ha_pst_maxai-libbp-pktran-dvmcc.sav

	2008 HEAVY AUTUMN, NORTHERN ARIZONA ENERGY PROJECT, POST-PROJECT - Area Interch	Plot 53 - 2008 Heavy Autumn - After Project, max WAPA Gen, Area Interchange	MW/% rate
	CASE: 08ha_pst_maxAI-LibBP-rev1.sav	Outage: Peacock 345/230 Tran & Davis-McConnico 230kV Line	C:upslf16MyPSLF iver2-na
	EOR=9300MW, Maximum WAPA-DSW Generation Modeled.		Rating = 2

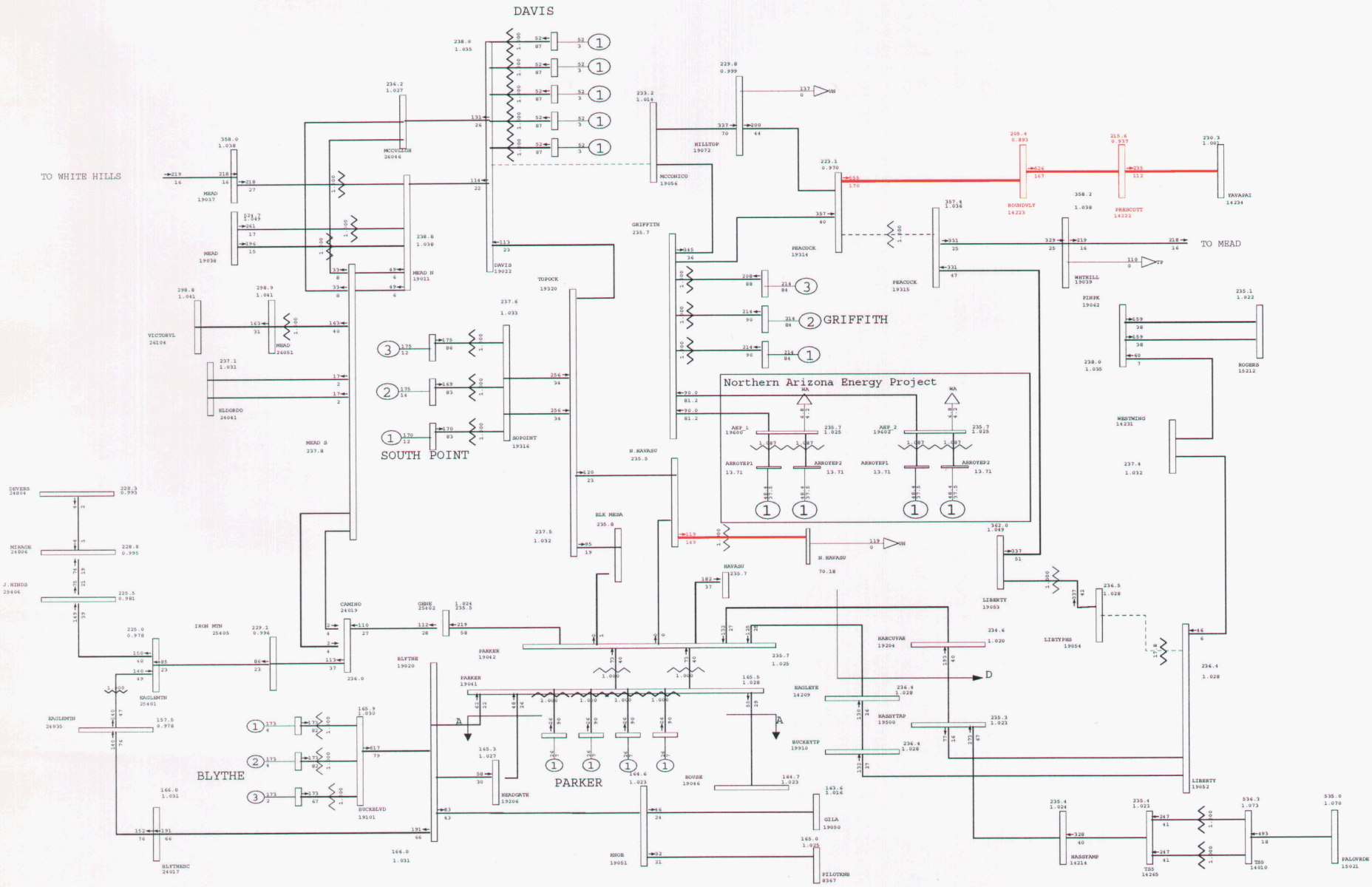

General Electric International, Inc. PSLF Program Thu Jul 19 15:19:53 2007 C:upslf16MyPSLF 8ha_pst_maxLD-LibBP-rev1.sav

	2008 HEAVY AUTUMN, NORTHERN ARIZONA ENERGY PROJECT, POST-PROJECT - UNS Load Inc CASE: 08ha_pst_maxLD-LibBP-rev1.sav EOR=9300MW, Maximum WAPA-DSW Generation Modeled.	Plot 54 - 2008 Heavy Autumn - After Project, max WAPA Gen, Regional Load Outage: Peacock 345/230 Tran & Davis-McConnico 230kV Line	MW/% rate C:upslf16MyPSLF iver2-na Rating = 2

Appendix C

List of Contingencies

NERC/WECC Category "B" and "C" contingency lists studied for the Northern Arizona Energy Project.

NERC/WECC Category "B" Contingencies

```
#  The following contingencies are included.
#  B2 - Relevant breaker-to-breater single 500 kV transmission circuit outages in areas 14(AZ), 18(Nevada),
#      22(SDG&E), 24(SCE) and 26(LADWP).
#  B2 - Relevant breaker-to-breaker single 230 kV transmission circuit outages in areas 14(AZ), 18 (Nevada) and 24 (SCE).
#  B2 - All breaker-to-breaker single transmission circuit outages in zone 191.
#  B3 - All single transformer outages (500/230kV) for the above areas.
#

#  Base Case -- Case Number 0
0
#
#  Case Number 1
1  14000 14004  "1 "   0    # LINE  from  CHOLLA   500.00 to SAGUARO  500.00  "1 "
0
#
#  Case Number 2
1  14001 14002  "1 "   0    # LINE  from  FOURCORN 500.00 to MOENKOPI 500.00  "1 "
0
#
#  Case Number 3
1  14002 14006  "1 "   0    # LINE  from  MOENKOPI 500.00 to YAVAPAI  500.00  "1 "
0
#
#  Case Number 4
1  14002 26044  "1 "   0    # LINE  from  MOENKOPI 500.00 to MARKETPL 500.00  "1 "
0
#
#  Case Number 5
1  14003 14002  "1 "   0    # LINE  from  NAVAJO   500.00 to MOENKOPI 500.00  "1 "
0
#
#  Case Number 6
1  14003 14005  "1 "   0    # LINE  from  NAVAJO   500.00 to WESTWING 500.00  "1 "
0
#
#  Case Number 7
1  14004 16000  "1 "   0    # LINE  from  SAGUARO  500.00 to TORTOLIT 500.00  "1 "
0
#
#  Case Number 8
1  14004 16001  "1 "   0    # LINE  from  SAGUARO  500.00 to TORTLIT2 500.00  "1 "
0
#
#  Case Number 9
1  14006 14005  "1 "   0    # LINE  from  YAVAPAI  500.00 to WESTWING 500.00  "1 "
0
#
#  Case Number 10
1  14008 14007  "1 "   0    # LINE  from  JOJOBA   500.00 to GILARIVR 500.00  "1 "
0
#
#  Case Number 11
1  14008 14007  "2 "   0    # LINE  from  JOJOBA   500.00 to GILARIVR 500.00  "2 "
0
#
#  Case Number 12
1  14008 15011  "1 "   0    # LINE  from  JOJOBA   500.00 to KYRENE   500.00  "1 "
0
#
#  Case Number 13
1  15001 14000  "1 "   0    # LINE  from  CORONADO 500.00 to CHOLLA   500.00  "1 "
0
#
#  Case Number 14
1  15001 15041  "1 "   0    # LINE  from  CORONADO 500.00 to SILVERKG 500.00  "1 "
```

```
0
#
#  Case Number 15
1  15021 14005  "1 "   0    # LINE  from  PALOVRDE 500.00 to WESTWING 500.00  "1 "
0
#
#  Case Number 16
1  15021 15061  "1 "   0    # LINE  from  PALOVRDE 500.00 to RUDD     500.00  "1 "
0
#
#  Case Number 17
1  15034 14005  "1 "   0    # LINE  from  PERKINS  500.00 to WESTWING 500.00  "1 "
0
#
#  Case Number 18
1  15041 15051  "1 "   0    # LINE  from  SILVERKG 500.00 to BROWNING 500.00  "1 "
0
#
#  Case Number 19
1  15051 15011  "1 "   0    # LINE  from  BROWNING 500.00 to KYRENE   500.00  "1 "
0
#
#  Case Number 20
1  15090 14008  "1 "   0    # LINE  from  HASSYAMP 500.00 to JOJOBA   500.00  "1 "
0
#
#  Case Number 21
1  15090 14009  "1 "   0    # LINE  from  HASSYAMP 500.00 to REDHAWK  500.00  "1 "
0
#
#  Case Number 22
1  15090 15021  "1 "   0    # LINE  from  HASSYAMP 500.00 to PALOVRDE 500.00  "1 "
0
#
#  Case Number 23
1  15090 15092  "1 "   0    # LINE  from  HASSYAMP 500.00 to ARLINTON 500.00  "1 "
0
#
#  Case Number 24
1  15090 15093  "1 "   0    # LINE  from  HASSYAMP 500.00 to HARQUAHA 500.00  "1 "
0
#
#  Case Number 25
1  15090 15094  "1 "   0    # LINE  from  HASSYAMP 500.00 to MESQUITE 500.00  "1 "
0
#
#  Case Number 26
1  18430 18450  "1 "   0    # LINE  from  DUKE     500.00 to H ALLEN  500.00  "1 "
0
#
#  Case Number 27
1  18440 18450  "1 "   0    # LINE  from  MIRANT   500.00 to H ALLEN  500.00  "1 "
0
#
#  Case Number 28
1  18450 18451  "1 "   0    # LINE  from  H ALLEN  500.00 to NWEST    500.00  "1 "
0
#
#  Case Number 29
1  18450 18452  "1 "   0    # LINE  from  H ALLEN  500.00 to CRSTL N  500.00  "1 "
0
#
#  Case Number 30
1  18450 19038  "1 "   0    # LINE  from  H ALLEN  500.00 to MEAD     500.00  "1 "
0
#
#  Case Number 31
1  19038 26044  "1 "   0    # LINE  from  MEAD     500.00 to MARKETPL 500.00  "1 "
0
#
```

```
#  Case Number 32
1  19038 15034  "1 "   0    # LINE  from  MEAD     500.00 to PERKINS  500.00  "1 "
0
#
#  Case Number 33
1  18400 18450  "1 "   0    # LINE  from  RELIANT  500.00 to H ALLEN  500.00  "1 "
0
#
#  Case Number 34
1  18425 18450  "1 "   0    # LINE  from  SLHWK    500.00 to H ALLEN  500.00  "1 "
0
#
#  Case Number 35
1  24042 24086  "1 "   0    # LINE  from  ELDORDO  500.00 to LUGO     500.00  "1 "
0
#
#  Case Number 36
1  24086 24097  "1 "   0    # LINE  from  LUGO     500.00 to MOHAVE   500.00  "1 "
0
#
#  Case Number 37
1  24097 24042  "1 "   0    # LINE  from  MOHAVE   500.00 to ELDORDO  500.00  "1 "
0
#
#  Case Number 38
1  24138 24151  "1 "   0    # LINE  from  SERRANO  500.00 to VALLEYSC 500.00  "1 "
0
#
#  Case Number 39
1  24801 24151  "1 "   0    # LINE  from  DEVERS   500.00 to VALLEYSC 500.00  "1 "
0
#
#  Case Number 40
1  14002 24042  "1 "   0    # LINE  from  MOENKOPI 500.00 to ELDORDO  500.00  "1 "
0
#
#  Case Number 41
1  30060 24156  "1 "   0    # LINE  from  MIDWAY   500.00 to VINCENT  500.00  "1 "
0
#
#  Case Number 42
1  30060 24156  "3 "   0    # LINE  from  MIDWAY   500.00 to VINCENT  500.00  "3 "
0
#
#  Case Number 43
1  24086 26105  "1 "   0    # LINE  from  LUGO     500.00 to VICTORVL 500.00  "1 "
0
#
#  Case Number 44
1  15021 24801  "1 "   0    # LINE  from  PALOVRDE 500.00 to DEVERS   500.00  "1 "
0
#
#  Case Number 45
1  15088 14015  "1 "   0    # LINE  from  PINAL_W  500.00 to SNTAROSA 500.00  "1 "
0
#
#  Case Number 46
1  15090 15088  "1 "   0    # LINE  from  HASSYAMP 500.00 to PINAL_W  500.00  "1 "
0
#
#  Case Number 47
1  15021 14010  "1 "   0    # LINE  from  PALOVRDE 500.00 to TS5      500.00  "1 "
0
#
#  Case Number 48
1  15090 22536  "1 "   0    # LINE  from  HASSYAMP 500.00 to N.GILA   500.00  "1 "
0
#
#  Case Number 49
1  22360 22468  "1 "   0    # LINE  from  IMPRLVLY 500.00 to MIGUEL   500.00  "1 "
```

```
0
#
#  Case Number 50
1  22536 22360  "1 "   0    # LINE  from  N.GILA   500.00 to IMPRLVLY 500.00  "1 "
0
#
#  Case Number 51
1  14003 26123  "1 "   0    # LINE  from  NAVAJO   500.00 to CRYSTAL  500.00  "1 "
0
#
#  Case Number 52
1  26003 26105  "1 "   0    # LINE  from  ADELANTO 500.00 to VICTORVL 500.00  "1 "
0
#
#  Case Number 53
1  26044 26003  "1 "   0    # LINE  from  MARKETPL 500.00 to ADELANTO 500.00  "1 "
0
#
#  Case Number 54
1  26044 26048  "1 "   0    # LINE  from  MARKETPL 500.00 to MCCULLGH 500.00  "1 "
0
#
#  Case Number 55
1  26048 26105  "1 "   0    # LINE  from  MCCULLGH 500.00 to VICTORVL 500.00  "1 "
0
#
#  Case Number 56
1  26105 26062  "1 "   0    # LINE  from  VICTORVL 500.00 to RINALDI  500.00  "1 "
0
#
#  Case Number 57
1  26123 26048  "1 "   0    # LINE  from  CRYSTAL  500.00 to MCCULLGH 500.00  "1 "
0
#
#  Case Number 58
1  24042 26048  "1 "   0    # LINE  from  ELDORDO  500.00 to MCCULLGH 500.00  "1 "
0
#
#  Case Number 59
1  19053 19315  "1 "   0    # LINE  from  LIBERTY  345.00 to PEACOCK  345.00  "1 "
0
#
#  Case Number 60
1  19053 19315  "1 "   0    # LINE  from  LIBERTY  345.00 to PEACOCK  345.00  "1 "
0
#
#  Case Number 61
1  19315 19039  "1 "   0    # LINE  from  PEACOCK  345.00 to WHTHILL  345.00  "1 "
0
#
#  Case Number 62
1  19039 19037  "1 "   0    # LINE  from  WHTHILL  345.00 to MEAD     345.00  "1 "
0
#
#  Case Number 63
1  19039 19037  "1 "   0    # LINE  from  WHTHILL  345.00 to MEAD     345.00  "1 "
0
#
#  Case Number 64
1  79024 79032  "1 "   0    # LINE  from  FLAGSTAF 345.00 to GLENCANY 345.00  "1 "
0
#
#  Case Number 65
1  79024 79032  "2 "   0    # LINE  from  FLAGSTAF 345.00 to GLENCANY 345.00  "2 "
0
#
#  Case Number 66
1  79024 79053  "1 "   0    # LINE  from  FLAGSTAF 345.00 to PINPKBRB 345.00  "1 "
0
#
```

```
#  Case Number 67
1 79024 79053 "1 "   0   # LINE  from  FLAGSTAF 345.00 to PINPKBRB 345.00  "1 "
0
#
#  Case Number 68
1 79024 79053 "2 "   0   # LINE  from  FLAGSTAF 345.00 to PINPKBRB 345.00  "2 "
0
#
#  Case Number 69
1 79064 14101 "1 "   0   # LINE  from  SHIPROCK 345.00 to FOURCORN 345.00  "1 "
0
#
#  Case Number 70
1 24219 24041 "2 "   0   # LINE  from  PISGAH  230.00 to ELDORDO  230.00  "2 "
0
#
#  Case Number 71
1 24627 24041 "1 "   0   # LINE  from  CIMA    230.00 to ELDORDO  230.00  "1 "
0
#
#  Case Number 72
1 22357  8332 "1 "   0   # LINE  from  IVPS    230.00 to ELCENTSW 230.00  "1 "
0
#
#  Case Number 73
1 25406 24806 "1 "   0   # LINE  from  J.HINDS 230.00 to MIRAGE   230.00  "1 "
0
#
#  Case Number 74
1  8311 24804 "1 "   0   # LINE  from  COAHCELA 230.00 to DEVERS  230.00  "1 "
0
#
#  Case Number 75
1  8695 24806 "1 "   0   # LINE  from  RAMON    230.00 to MIRAGE  230.00  "1 "
0
#
#  Case Number 76
1 14204 14215 "1 "   0   # LINE  from  CHOLLA   230.00 to LEUPP   230.00  "1 "
0
#
#  Case Number 77
1 14265 14214 "1 "   0   # LINE  from  TS5     230.00 to HASSYAMP 230.00  "1 "
0
#
#  Case Number 78
1 14265 14254 "1 "   0   # LINE  from  TS5     230.00 to TS1     230.00  "1 "
0
#
#  Case Number 79
1 14254 14255 "1 "   0   # LINE  from  TS1     230.00 to TS2     230.00  "1 "
0
#
#  Case Number 80
1 14255 14252 "1 "   0   # LINE  from  TS2     230.00 to TS3     230.00  "1 "
0
#
#  Case Number 81
1 14258 14252 "1 "   0   # LINE  from  TS4     230.00 to TS3     230.00  "1 "
0
#
#  Case Number 82
1 15230 14252 "1 "   0   # LINE  from  RUDD    230.00 to TS3     230.00  "1 "
0
#
#  Case Number 83
1 14228 14231 "1 "   0   # LINE  from  SURPRISE 230.00 to WESTWING 230.00  "1 "
0
#
#  Case Number 84
1 15201 14231 "1 "   0   # LINE  from  AGUAFRIA 230.00 to WESTWING 230.00  "1 "
```

```
0
#
#  Case Number 85
1  14207 14231  "1 "   0    # LINE  from  DEERVALY 230.00 to WESTWING 230.00  "1 "
0
#
#  Case Number 86
1  19042 25402  "1 "   0    # LINE  from  PARKER   230.00 to GENE     230.00  "1 "
0
#
#  Case Number 87
1  19018 18003  "1 "   0    # LINE  from  BC TAP   230.00 to AMARGOSA 230.00  "1 "
0
#
#  Case Number 88
1  19011 19043  "1 "   0    # LINE  from  MEAD N   230.00 to HVRA3A4  230.00  "1 "
0
#
#  Case Number 89
1  19042 19074  "1 "   0    # LINE  from  PARKER   230.00 to N.HAVASU 230.00  "1 "
0
#
#  Case Number 90
1  14201 19052  "1 "   0    # LINE  from  BUCKEYE  230.00 to LIBERTY  230.00  "1 "
0
#
#  Case Number 91
1  14223 19314  "1 "   0    # LINE  from  ROUNDVLY 230.00 to PEACOCK  230.00  "1 "
1  14222 14223  "1 "   0    # LINE  from  PRESCOTT 230.00 to ROUNDVLY 230.00  "1 "
0
#
#  Case Number 92
1  14231 19062  "1 "   0    # LINE  from  WESTWING 230.00 to PINPK    230.00  "1 "
0
#
#  Case Number 93
1  14235 14238  "1 "   0    # LINE  from  GILABEND 230.00 to GILARIVR 230.00  "1 "
0
#
#  Case Number 94
1  14246 14231  "1 "   0    # LINE  from  RACEWAY  230.00 to WESTWING 230.00  "1 "
0
#
#  Case Number 95
1  15212 19062  "1 "   0    # LINE  from  ROGERS   230.00 to PINPK    230.00  "1 "
0
#
#  Case Number 96
1  15212 19215  "1 "   0    # LINE  from  ROGERS   230.00 to SPOOKHIL 230.00  "1 "
1  19215 19045  "1 "   0    # LINE  from  SPOOKHIL 230.00 to COOLIDGE 230.00  "1 "
0
#
#  Case Number 97
1  18003 18006  "1 "   0    # LINE  from  AMARGOSA 230.00 to HENDRSON 230.00  "1 "
0
#
#  Case Number 98
1  18005 18006  "1 "   0    # LINE  from  BASIC    230.00 to HENDRSON 230.00  "1 "
0
#
#  Case Number 99
1  18006 19011  "1 "   0    # LINE  from  HENDRSON 230.00 to MEAD N   230.00  "1 "
0
#
#  Case Number 100
1  19012 19011  "1 "   0    # LINE  from  MEAD S   230.00 to MEAD N   230.00  "1 "
0
#
#  Case Number 101
1  19018 19011  "1 "   0    # LINE  from  BC TAP   230.00 to MEAD N   230.00  "1 "
```

```
0
#
#  Case Number 102
1  19022 19011  "1 "   0    # LINE  from  DAVIS    230.00 to MEAD N   230.00  "1 "
0
#
#  Case Number 103
1  19022 19320  "2 "   0    # LINE  from  DAVIS    230.00 to TOPOCK   230.00  "2 "
0
#
#  Case Number 104
1  19022 26046  "1 "   0    # LINE  from  DAVIS    230.00 to MCCULLGH 230.00  "1 "
0
#
#  Case Number 105
1  19029 19012  "1 "   0    # LINE  from  HOVRA5A6 230.00 to MEAD S   230.00  "1 "
0
#
#  Case Number 106
1  19030 19012  "1 "   0    # LINE  from  HOVRA7-9 230.00 to MEAD S   230.00  "1 "
0
#
#  Case Number 107
1  19054 19052  "BY"   0    # LINE  from  LIBTYPHS 230.00 to LIBERTY  230.00  "BY"
0
#
#  Case Number 108
1  79063 79061  "BY"   0    # LINE  from  SHIPROCK 230.00 to SHIP PS  230.00  "BY"
0
#
#  Case Number 109
1  19061 19055  "1 "   0    # LINE  from  PHXWAPA  230.00 to LONEBUTT 230.00  "1 "
0
#
#  Case Number 110
1  79028 79031  "BY"   0    # LINE  from  GLEN PS  230.00 to GLENCANY 230.00  "BY"
0
#
#  Case Number 111
1  19022 19130  "1 "   0    # LINE  from  DAVIS    230.00 to ZORB     230.00  "1 "
0
#
#  Case Number 112
1  19130 19320  "1 "   0    # LINE  from  ZORB     230.00 to TOPOCK   230.00  "1 "
0
#
#  Case Number 113
1  19062 14243  "1 "   0    # LINE  from  PINPK    230.00 to GAVILNPK 230.00  "1 "
0
#
#  Case Number 114
1  19042 19019  "1 "   0    # LINE  from  PARKER   230.00 to BLK MESA 230.00  "1 "
0
#
#  Case Number 115
1  19042 19075  "1 "   0    # LINE  from  PARKER   230.00 to HAVASU   230.00  "1 "
0
#
#  Case Number 116
1  19042 19204  "1 "   0    # LINE  from  PARKER   230.00 to HARCUVAR 230.00  "1 "
1  19204 19500  "1 "   0    # LINE  from  HARCUVAR 230.00 to HASSYTAP 230.00  "1 "
1  19500 19052  "1 "   0    # LINE  from  HASSYTAP 230.00 to LIBERTY  230.00  "1 "
0
#
#  Case Number 117
1  19045 19410  "1 "   0    # LINE  from  COOLIDGE 230.00 to SUN ARIZ 230.00  "1 "
0
#
#  Case Number 118
1  19052 14231  "1 "   0    # LINE  from  LIBERTY  230.00 to WESTWING 230.00  "1 "
```

```
0
#
#  Case Number 119
1  19052 19061  "1 "   0    # LINE  from  LIBERTY  230.00 to PHXWAPA  230.00  "1 "
0
#
#  Case Number 120
1  19055 19068  "1 "   0    # LINE  from  LONEBUTT 230.00 to TESTTRAK 230.00  "1 "
0
#
#  Case Number 121
1  19056 19022  "1 "   0    # LINE  from  MCCONICO 230.00 to DAVIS    230.00  "1 "
0
#
#  Case Number 122
1  19056 19310  "1 "   0    # LINE  from  MCCONICO 230.00 to GRIFFITH 230.00  "1 "
0
#
#  Case Number 123
1  19062 15211  "1 "   0    # LINE  from  PINPK    230.00 to PINPKSRP 230.00  "1 "
0
#
#  Case Number 124
1  19072 19056  "1 "   0    # LINE  from  HILLTOP  230.00 to MCCONICO 230.00  "1 "
0
#
#  Case Number 125
1  19079 19012  "1 "   0    # LINE  from  HOVRN7N8 230.00 to MEAD S   230.00  "1 "
0
#
#  Case Number 126
1  19080 19012  "1 "   0    # LINE  from  HOVRN5N6 230.00 to MEAD S   230.00  "1 "
0
#
#  Case Number 127
1  19081 19012  "1 "   0    # LINE  from  HOVRN3N4 230.00 to MEAD S   230.00  "1 "
0
#
#  Case Number 128
1  19082 19012  "1 "   0    # LINE  from  HOVRN1N2 230.00 to MEAD S   230.00  "1 "
0
#
#  Case Number 129
1  19083 19012  "1 "   0    # LINE  from  HOVRA1A2 230.00 to MEAD S   230.00  "1 "
0
#
#  Case Number 130
1  19208 14246  "1 "   0    # LINE  from  N.WADDEL 230.00 to RACEWAY  230.00  "1 "
0
#
#  Case Number 131
1  19310 19314  "1 "   0    # LINE  from  GRIFFITH 230.00 to PEACOCK  230.00  "1 "
0
#
#  Case Number 132
1  19314 19072  "1 "   0    # LINE  from  PEACOCK  230.00 to HILLTOP  230.00  "1 "
0
#
#  Case Number 133
1  19320 19019  "1 "   0    # LINE  from  TOPOCK   230.00 to BLK MESA 230.00  "1 "
0
#
#  Case Number 134
1  19320 19316  "1 "   0    # LINE  from  TOPOCK   230.00 to SOPOINT  230.00  "1 "
0
#
#  Case Number 135
1  79028 79093  "1 "   0    # LINE  from  GLEN PS  230.00 to NAVAJO   230.00  "1 "
0
#
```

```
#  Case Number 136
1  79043 79063  "1 "   0    # LINE  from  KAYENTA  230.00 to SHIPROCK 230.00  "1 "
0
#
#  Case Number 137
1  79043 79096  "1 "   0    # LINE  from  KAYENTA  230.00 to LNGHOUSE 230.00  "1 "
0
#
#  Case Number 138
1  79093 79096  "1 "   0    # LINE  from  NAVAJO   230.00 to LNGHOUSE 230.00  "1 "
0
#
#  Case Number 139
1  19320 19074  "1 "   0    # LINE  from  TOPOCK   230.00 to N.HAVASU 230.00  "1 "
0
#
#  Case Number 140
1  19055 19052  "1 "   0    # LINE  from  LONEBUTT 230.00 to LIBERTY  230.00  "1 "
0
#
#  Case Number 141
1  19055 19410  "1 "   0    # LINE  from  LONEBUTT 230.00 to SUN ARIZ 230.00  "1 "
0
#
#  Case Number 142
1  19068 19218  "1 "   0    # LINE  from  TESTTRAK 230.00 to CASAGRND 230.00  "1 "
0
#
#  Case Number 143
1  18005 18006  "3 "   0    # LINE  from  BASIC    230.00 to HENDRSON 230.00  "3 "
0
#
#  Case Number 144
1  19012 19011  "2 "   0    # LINE  from  MEAD S   230.00 to MEAD N   230.00  "2 "
0
#
#  Case Number 145
1  14243 14222  "1 "   0    # LINE  from  GAVILNPK 230.00 to PRESCOTT 230.00  "1 "
0
#
#  Case Number 146
1  19042 14209  "1 "   0    # LINE  from  PARKER   230.00 to EAGLEYE  230.00  "1 "
1  14209 19910  "1 "   0    # LINE  from  EAGLEYE  230.00 to BUCKEYTP 230.00  "1 "
1  19910 19052  "1 "   0    # LINE  from  BUCKEYTP 230.00 to LIBERTY  230.00  "1 "
0
#
#  Case Number 147
1  19500 14214  "1 "   0    # LINE  from  HASSYTAP 230.00 to HASSYAMP 230.00  "1 "
0
#

#  Case Number 148
1  19020 19101  "1 "   0    # LINE  from  BLYTHE   161.00 to BUCKBLVD 161.00  "1 "
0
#
#  Case Number 149
1  19020 19206  "1 "   0    # LINE  from  BLYTHE   161.00 to HEADGATE 161.00  "1 "
1  19041 19206  "1 "   0    # LINE  from  PARKER   161.00 to HEADGATE 161.00  "1 "
0
#
#  Case Number 150
1  19041 19020  "1 "   0    # LINE  from  PARKER   161.00 to BLYTHE   161.00  "1 "
0
#
#  Case Number 151
1  19041 19046  "1 "   0    # LINE  from  PARKER   161.00 to BOUSE    161.00  "1 "
1  19046 19100  "1 "   0    # LINE  from  BOUSE    161.00 to KOFA     161.00  "1 "
0
#
#  Case Number 152
```

```
1 19020 19105 "1 "   0   # LINE  from  BLYTHE   161.00 to GOLDMNTP 161.00  "1 "
1 19105 19051 "1 "   0   # LINE  from  GOLDMNTP 161.00 to KNOB     161.00  "1 "
0
#
#  Case Number 153
1 19050 19051 "1 "   0   # LINE  from  GILA     161.00 to KNOB     161.00  "1 "
0
#
#  Case Number 154
1 19050 19070 "1 "   0   # LINE  from  GILA     161.00 to DOME TAP 161.00  "1 "
0
#
#  Case Number 155
1 19063 19050 "1 "   0   # LINE  from  WLTNMOHK 161.00 to GILA     161.00  "1 "
0
#
#  Case Number 156
1 19063 19070 "1 "   0   # LINE  from  WLTNMOHK 161.00 to DOME TAP 161.00  "1 "
0
#
#  Case Number 157
1 19100 19070 "1 "   0   # LINE  from  KOFA     161.00 to DOME TAP 161.00  "1 "
0
#
#  Case Number 158
1 19063 19040 "1 "   0   # LINE  from  WLTNMOHK 161.00 to DUMWLTN  161.00  "1 "
0
#
#  Case Number 159
1 19044 14359 "1 "   0   # LINE  from  COOLIDGE 115.00 to VLYFARMS 115.00  "1 "
1 14359 19057 "1 "   0   # LINE  from  VLYFARMS 115.00 to ORACLE   115.00  "1 "
0
#
#  Case Number 160
1 19044 19065 "1 "   0   # LINE  from  COOLIDGE 115.00 to ED-2     115.00  "1 "
0
#
#  Case Number 161
1 19044 19066 "1 "   0   # LINE  from  COOLIDGE 115.00 to SIGNAL   115.00  "1 "
0
#
#  Case Number 162
1 19047 19221 "1 "   0   # LINE  from  DEL BAC  115.00 to NOGALES  115.00  "1 "
0
#
#  Case Number 163
1 19064 19047 "1 "   0   # LINE  from  TUCSON   115.00 to DEL BAC  115.00  "1 "
0
#
#  Case Number 164
1 19064 19057 "1 "   0   # LINE  from  TUCSON   115.00 to ORACLE   115.00  "1 "
0
#
#  Case Number 165
1 19065 19066 "1 "   0   # LINE  from  ED-2     115.00 to SIGNAL   115.00  "1 "
0
#
#  Case Number 166
1 19065 19071 "1 "   0   # LINE  from  ED-2     115.00 to ED-4     115.00  "1 "
0
#
#  Case Number 167
1 19065 19202 "1 "   0   # LINE  from  ED-2     115.00 to BRADY    115.00  "1 "
0
#
#  Case Number 168
1 19071 19067 "1 "   0   # LINE  from  ED-4     115.00 to ED-5     115.00  "1 "
0
#
#  Case Number 169
```

```
1 19201 19047 "1 "  0   # LINE from BLACKMTN 115.00 to DEL BAC  115.00 "1 "
0
#
#  Case Number 170
1 19202 19209 "1 "  0   # LINE from BRADY   115.00 to PICACHOW 115.00 "1 "
0
#
#  Case Number 171
1 19203 19213 "1 "  0   # LINE from BRAWLEY 115.00 to SANXAVER 115.00 "1 "
0
#
#  Case Number 172
1 19209 19211 "1 "  0   # LINE from PICACHOW 115.00 to RED ROCK 115.00 "1 "
0
#
#  Case Number 173
1 19210 19064 "1 "  0   # LINE from RATTLSNK 115.00 to TUCSON   115.00 "1 "
0
#
#  Case Number 174
1 19210 19216 "1 "  0   # LINE from RATTLSNK 115.00 to TWINPEAK 115.00 "1 "
0
#
#  Case Number 175
1 19211 14356 "1 "  0   # LINE from RED ROCK 115.00 to SAG.EAST 115.00 "1 "
0
#
#  Case Number 176
1 19212 19203 "1 "  0   # LINE from SANDARIO 115.00 to BRAWLEY 115.00 "1 "
0
#
#  Case Number 177
1 19213 19214 "1 "  0   # LINE from SANXAVER 115.00 to SNYDHILL 115.00 "1 "
0
#
#  Case Number 178
1 19214 19201 "1 "  0   # LINE from SNYDHILL 115.00 to BLACKMTN 115.00 "1 "
0
#
#  Case Number 179
1 19216 19212 "1 "  0   # LINE from TWINPEAK 115.00 to SANDARIO 115.00 "1 "
0
#
#  Case Number 180
1 79097 79112 "1 "  0   # LINE from ANIMAS  115.00 to MESA FM 115.00 "1 "
0
#
#  Case Number 181
1 79097 79116 "1 "  0   # LINE from ANIMAS  115.00 to SULLIVAN 115.00 "1 "
0
#
#  Case Number 182
1 79098 79100 "1 "  0   # LINE from BERGIN  115.00 to FOOTHILS 115.00 "1 "
0
#
#  Case Number 183
1 79098 79114 "1 "  0   # LINE from BERGIN  115.00 to SAN JUAN 115.00 "1 "
0
#
#  Case Number 184
1 79100 79106 "1 "  0   # LINE from FOOTHILS 115.00 to HOODMESA 115.00 "1 "
0
#
#  Case Number 185
1 79101 79102 "1 "  0   # LINE from FRUITAP 115.00 to FRUITLND 115.00 "1 "
0
#
#  Case Number 186
1 79101 79106 "1 "  0   # LINE from FRUITAP 115.00 to HOODMESA 115.00 "1 "
0
```

```
#
# Case Number 187
1 79105 79106 "1 "  0   # LINE from GLADETAP 115.00 to HOODMESA 115.00 "1 "
0
#
# Case Number 188
1 79105 79109 "1 "  0   # LINE from GLADETAP 115.00 to LAPLATA 115.00 "1 "
0
#
# Case Number 189
1 79106 79116 "1 "  0   # LINE from HOODMESA 115.00 to SULLIVAN 115.00 "1 "
0
#
# Case Number 190
1 79113 79114 "1 "  0   # LINE from NAVAJO 115.00 to SAN JUAN 115.00 "1 "
0
#
# Case Number 191
1 79027 79098 "1 "  0   # LINE from GALLEGOS 115.00 to BERGIN 115.00 "1 "
0
#
# Case Number 192
1 79062 79101 "1 "  0   # LINE from SHIPROCK 115.00 to FRUITAP 115.00 "1 "
0
#
# Case Number 193
1 79062 79112 "1 "  0   # LINE from SHIPROCK 115.00 to MESA FM 115.00 "1 "
0
#
# Case Number 194
1 19067 19048 "1 "  0   # LINE from ED-5 115.00 to EMPIRE 115.00 "1 "
0
#
# Case Number 195
1 14357 19067 "2 "  0   # LINE from SAG.WEST 115.00 to ED-5 115.00 "2 "
0
#
# Case Number 196
1 19222 19225 "1 "  0   # LINE from CASAGRND 115.00 to THORNTON 115.00 "1 "
0
#
# Case Number 197
1 14350 17001 "1 "  0   # LINE from ADAMS 115.00 to APACHE 115.00 "1 "
0
#
# Case Number 198
1 14350 19221 "1 "  0   # LINE from ADAMS 115.00 to NOGALES 115.00 "1 "
0
#
# Case Number 199
1 14356 19057 "1 "  0   # LINE from SAG.EAST 115.00 to ORACLE 115.00 "1 "
0
#
# Case Number 200
1 14357 19067 "1 "  0   # LINE from SAG.WEST 115.00 to ED-5 115.00 "1 "
0
#
# Case Number 201
1 14356 17013 "1 "  0   # LINE from SAG.EAST 115.00 to MARANATP 115.00 "1 "
0
#
# Case Number 202
1 17013 19210 "1 "  0   # LINE from MARANATP 115.00 to RATTLSNK 115.00 "1 "
0
#
# Case Number 203
1 19225 19048 "1 "  0   # LINE from THORNTON 115.00 to EMPIRE 115.00 "1 "
0
#
# Case Number 204
```

```
1 84836 19049 "1 "   0   # LINE  from  N.GILA   69.00 to GILA     69.00  "1 "
0
#
#  Case Number 205
1 84841 19049 "1 "   0   # LINE  from  SONORA   69.00 to GILA     69.00  "1 "
0
#
##########################################################################################
#
#  Case Number 206
2 14000 14100 "1 "   0   # TRAN  from  CHOLLA   500.00 to CHOLLA   345.00  "1 "
0
#
#  Case Number 207
2 14000 14100 "2 "   0   # TRAN  from  CHOLLA   500.00 to CHOLLA   345.00  "2 "
0
#
#  Case Number 208
2 14001 14101 "1 "   0   # TRAN  from  FOURCORN 500.00 to FOURCORN 345.00  "1 "
0
#
#  Case Number 209
2 14002 14006 "1 "   0   # TRAN  from  MOENKOPI 500.00 to YAVAPAI 500.00  "1 "
0
#
#  Case Number 210
2 14005 16107 "1 "   0   # TRAN  from  WESTWING 500.00 to WESTWING 345.00  "1 "
0
#
#  Case Number 211
2 14005 14231 "1 "   0   # TRAN  from  WESTWING 500.00 to WESTWING 230.00  "1 "
0
#
#  Case Number 212
2 15088 16114 "1 "   0   # TRAN  from  PINAL_W  500.00 to PINALWES 345.00  "1 "
0
#
#  Case Number 213
2 14225 14356 "1 "   0   # TRAN  from  SAGUARO  230.00 to SAG.EAST 115.00  "1 "
0
#
#  Case Number 214
2 14225 14357 "1 "   0   # TRAN  from  SAGUARO  230.00 to SAG.WEST 115.00  "1 "
0
#
#  Case Number 215
2 19037 19011 "1 "   0   # TRAN  from  MEAD     345.00 to MEAD N   230.00  "1 "
0
#
#  Case Number 216
2 19038 19011 "1 "   0   # TRAN  from  MEAD     500.00 to MEAD N   230.00  "1 "
0
#
#  Case Number 217
2 19053 19054 "1 "   0   # TRAN  from  LIBERTY  345.00 to LIBTYPHS 230.00  "1 "
0
#
#  Case Number 218
2 19054 19052 "1 "   0   # TRAN  from  LIBTYPHS 230.00 to LIBERTY  230.00  "1 "
0
#
#  Case Number 219
2 18003 18030 "1 "   0   # TRAN  from  AMARGOSA 230.00 to AMARGOSA 138.00  "1 "
0
#
#  Case Number 220
2 19001 19022 "1 "   0   # TRAN  from  DAVISG1   13.80 to DAVIS    230.00  "1 "
0
#
#  Case Number 221
```

```
2 19006 19041 "1 "   0   # TRAN from PARKERG1  6.90 to PARKER  161.00 "1 "
0
#
#  Case Number 222
2 19012 18173 "1 "   0   # TRAN from MEAD S  230.00 to MEAD B   69.00 "1 "
0
#
#  Case Number 223
2 19012 18174 "1 "   0   # TRAN from MEAD S  230.00 to MEAD A   69.00 "1 "
0
#
#  Case Number 224
2 19019 14401 "1 "   0   # TRAN from BLK MESA 230.00 to BLK MESA 69.00 "1 "
0
#
#  Case Number 225
2 19032 19082 "1 "   0   # TRAN from HOVRN1N2 16.50 to HOVRN1N2 230.00 "1 "
0
#
#  Case Number 226
2 19033 19081 "1 "   0   # TRAN from HOVRN3N4 16.50 to HOVRN3N4 230.00 "1 "
0
#
#  Case Number 227
2 19041 19042 "1 "   0   # TRAN from PARKER  161.00 to PARKER  230.00 "1 "
0
#
#  Case Number 228
2 19041 19042 "2 "   0   # TRAN from PARKER  161.00 to PARKER  230.00 "2 "
0
#
#  Case Number 229
2 19045 19044 "1 "   0   # TRAN from COOLIDGE 230.00 to COOLIDGE 115.00 "1 "
0
#
#  Case Number 230
2 19045 19044 "2 "   0   # TRAN from COOLIDGE 230.00 to COOLIDGE 115.00 "2 "
0
#
#  Case Number 231
2 19050 19049 "1 "   0   # TRAN from GILA    161.00 to GILA     69.00 "1 "
0
#
#  Case Number 232
2 19058 19059 "1 "   0   # TRAN from PHXWAPA 100.00 to PHXWAPA 115.00 "1 "
0
#
#  Case Number 233
2 19058 19060 "1 "   0   # TRAN from PHXWAPA 100.00 to PHXWAPA  12.50 "1 "
0
#
#  Case Number 234
2 19061 19058 "1 "   0   # TRAN from PHXWAPA 230.00 to PHXWAPA 100.00 "1 "
0
#
#  Case Number 235
2 19076 19075 "1 "   0   # TRAN from HAVASU12 13.20 to HAVASU  230.00 "1 "
0
#
#  Case Number 236
2 19077 19075 "1 "   0   # TRAN from HAVASU34 13.20 to HAVASU  230.00 "1 "
0
#
#  Case Number 237
2 19078 19075 "1 "   0   # TRAN from HAVASU56 13.20 to HAVASU  230.00 "1 "
0
#
#  Case Number 238
2 19101 19322 "1 "   0   # TRAN from BUCKBLVD 161.00 to BLYENG1  16.00 "1 "
0
```

```
#
# Case Number 239
2 19300 19208 "1 "  0   # TRAN from WADDEL23 13.80 to N.WADDEL 230.00 "1 "
0
#
# Case Number 240
2 19301 19208 "1 "  0   # TRAN from WADDEL67 13.80 to N.WADDEL 230.00 "1 "
0
#
# Case Number 241
2 19304 19206 "1 "  0   # TRAN from HEADGATE 69.00 to HEADGATE 161.00 "1 "
0
#
# Case Number 242
2 19304 19206 "2 "  0   # TRAN from HEADGATE 69.00 to HEADGATE 161.00 "2 "
0
#
# Case Number 243
2 19305 19304 "1 "  0   # TRAN from HEADGAT1  4.16 to HEADGATE 69.00 "1 "
0
#
# Case Number 244
2 19310 19311 "1 "  0   # TRAN from GRIFFITH 230.00 to GRIFFTH1 16.00 "1 "
0
#
# Case Number 245
2 19315 19314 "1 "  0   # TRAN from PEACOCK 345.00 to PEACOCK 230.00 "1 "
0
#
# Case Number 246
2 19316 19319 "3 "  0   # TRAN from SOPOINT 230.00 to SOPOINT3 16.00 "3 "
0
#
# Case Number 247
2 19410 19411 "1 "  0   # TRAN from SUN ARIZ 230.00 to SUN G1   13.80 "1 "
0
#
# Case Number 248
2 79028 79031 "1 "  0   # TRAN from GLEN PS 230.00 to GLENCANY 230.00 "1 "
0
#
# Case Number 249
2 79032 79031 "1 "  0   # TRAN from GLENCANY 345.00 to GLENCANY 230.00 "1 "
0
#
# Case Number 250
2 79032 79031 "2 "  0   # TRAN from GLENCANY 345.00 to GLENCANY 230.00 "2 "
0
#
# Case Number 251
2 79053 19062 "1 "  0   # TRAN from PINPKBRB 345.00 to PINPK   230.00 "1 "
0
#
# Case Number 252
2 79053 19062 "2 "  0   # TRAN from PINPKBRB 345.00 to PINPK   230.00 "2 "
0
#
# Case Number 253
2 79053 19062 "3 "  0   # TRAN from PINPKBRB 345.00 to PINPK   230.00 "3 "
0
#
# Case Number 254
2 79063 79062 "1 "  0   # TRAN from SHIPROCK 230.00 to SHIPROCK 115.00 "1 "
0
#
# Case Number 255
2 79064 79063 "1 "  0   # TRAN from SHIPROCK 345.00 to SHIPROCK 230.00 "1 "
0
#
# Case Number 256
```

```
2 79150 79032 "1 "   0   # TRAN from GLENC1-2 13.80 to GLENCANY 345.00 "1 "
0
#
#  Case Number 257
2 19038 19011 "2 "   0   # TRAN from MEAD    500.00 to MEAD N  230.00 "2 "
0
#
#  Case Number 258
2 19023 19043 "1 "   0   # TRAN from HOOVERA3 16.50 to HVRA3A4 230.00 "1 "
0
#
#  Case Number 259
2 19074 19073 "1 "   0   # TRAN from N.HAVASU 230.00 to N.HAVASU 69.00 "1 "
0
#
#  Case Number 260
2 19068 19217 "1 "   0   # TRAN from TESTTRAK 230.00 to TESTTRAK 69.00 "1 "
0
#
#  Case Number 261
2 19218 19222 "1 "   0   # TRAN from CASAGRND 230.00 to CASAGRND 115.00 "1 "
0
#
###################### PROJECT CONTINGENCIES ##########################################
#
#  Case Number 262
2 19310 19602 "1 "   0   # TRAN from GRIFFITH 230.00 to GRIFFTH5 13.80 "1 "
0
#
#
-1
# EOF
```

NERC/WECC Category "C" Contingencies

```
#  Base Case -- Case Number 0
0
#
#  Case Number 1
1  19053 19315 "1"   0    # LINE  from  LIBERTY  345.00 to PEACOCK  345.00
1  19315 19039 "1"   0    # LINE  from  PEACOCK  345.00 to WHTHILL  345.00
0
#
#  Case Number 2
1  19053 19315 "1"   0    # LINE  from  LIBERTY  345.00 to PEACOCK  345.00
1  19039 19037 "1"   0    # LINE  from  WHTHILL  345.00 to MEAD     345.00
0
#
#  Case Number 3
1  19053 19315 "1"   0    # LINE  from  LIBERTY  345.00 to PEACOCK  345.00
2  19315 19314 "1"   0    # TRAN  from  PEACOCK  345.00 to PEACOCK  230.00
0
#
#  Case Number 4
1  19053 19315 "1"   0    # LINE  from  LIBERTY  345.00 to PEACOCK  345.00
1  19056 19022 "1"   0    # LINE  from  MCCONICO 230.00 to DAVIS    230.00
0
#
#  Case Number 5
1  19053 19315 "1"   0    # LINE  from  LIBERTY  345.00 to PEACOCK  345.00
1  19072 19056 "1"   0    # LINE  from  HILLTOP  230.00 to MCCONICO 230.00
0
#
#  Case Number 6
1  19053 19315 "1"   0    # LINE  from  LIBERTY  345.00 to PEACOCK  345.00
1  19056 19310 "1"   0    # LINE  from  MCCONICO 230.00 to GRIFFITH 230.00
0
#
#  Case Number 7
1  19053 19315 "1"   0    # LINE  from  LIBERTY  345.00 to PEACOCK  345.00
1  19310 19314 "1"   0    # LINE  from  GRIFFITH 230.00 to PEACOCK  230.00
0
#
#  Case Number 8
1  19053 19315 "1"   0    # LINE  from  LIBERTY  345.00 to PEACOCK  345.00
1  19314 19072 "1"   0    # LINE  from  PEACOCK  230.00 to HILLTOP  230.00
0
#
#  Case Number 9
1  19053 19315 "1"   0    # LINE  from  LIBERTY  345.00 to PEACOCK  345.00
1  19022 19011 "1"   0    # LINE  from  DAVIS    230.00 to MEAD N   230.00
0
#
#  Case Number 10
1  19053 19315 "1"   0    # LINE  from  LIBERTY  345.00 to PEACOCK  345.00
1  19022 26046 "1"   0    # LINE  from  DAVIS    230.00 to MCCULLGH 230.00
0
#
#  Case Number 11
1  19053 19315 "1"   0    # LINE  from  LIBERTY  345.00 to PEACOCK  345.00
1  19022 19130 "1"   0    # LINE  from  DAVIS    230.00 to ZORB     230.00
0
#
#  Case Number 12
1  19053 19315 "1"   0    # LINE  from  LIBERTY  345.00 to PEACOCK  345.00
1  19130 19320 "1"   0    # LINE  from  ZORB     230.00 to TOPOCK   230.00
0
#
#  Case Number 13
1  19053 19315 "1"   0    # LINE  from  LIBERTY  345.00 to PEACOCK  345.00
1  19022 19320 "2"   0    # LINE  from  DAVIS    230.00 to TOPOCK   230.00
0
#
```

```
#  Case Number 14
1  19053 19315 "1"   0   # LINE  from  LIBERTY  345.00 to PEACOCK  345.00
1  19320 19316 "1"   0   # LINE  from  TOPOCK   230.00 to SOPOINT  230.00
0
#
#  Case Number 15
1  19053 19315 "1"   0   # LINE  from  LIBERTY  345.00 to PEACOCK  345.00
1  19320 19316 "2"   0   # LINE  from  TOPOCK   230.00 to SOPOINT  230.00
0
#
#  Case Number 16
1  19053 19315 "1"   0   # LINE  from  LIBERTY  345.00 to PEACOCK  345.00
1  19320 19019 "1"   0   # LINE  from  TOPOCK   230.00 to BLK MESA 230.00
0
#
#  Case Number 17
1  19053 19315 "1"   0   # LINE  from  LIBERTY  345.00 to PEACOCK  345.00
1  19320 19074 "1"   0   # LINE  from  TOPOCK   230.00 to N.HAVASU 230.00
0
#
#  Case Number 18
1  19053 19315 "1"   0   # LINE  from  LIBERTY  345.00 to PEACOCK  345.00
1  19052 14231 "1"   0   # LINE  from  LIBERTY  230.00 to WESTWING 230.00
0
#
#  Case Number 19
1  19053 19315 "1"   0   # LINE  from  LIBERTY  345.00 to PEACOCK  345.00
1  19012 19011 "1"   0   # LINE  from  MEAD S   230.00 to MEAD N   230.00
0
#
#  Case Number 20
1  19053 19315 "1"   0   # LINE  from  LIBERTY  345.00 to PEACOCK  345.00
1  19012 19011 "2"   0   # LINE  from  MEAD S   230.00 to MEAD N   230.00
0
#
#  Case Number 21
1  19053 19315 "1"   0   # LINE  from  LIBERTY  345.00 to PEACOCK  345.00
2  19037 19011 "1"   0   # TRAN  from  MEAD     345.00 to MEAD N   230.00
0
#
#  Case Number 22
1  19315 19039 "1"   0   # LINE  from  PEACOCK  345.00 to WHTHILL  345.00
1  19039 19037 "1"   0   # LINE  from  WHTHILL  345.00 to MEAD     345.00
0
#
#  Case Number 23
1  19315 19039 "1"   0   # LINE  from  PEACOCK  345.00 to WHTHILL  345.00
2  19315 19314 "1"   0   # TRAN  from  PEACOCK  345.00 to PEACOCK  230.00
0
#
#  Case Number 24
1  19315 19039 "1"   0   # LINE  from  PEACOCK  345.00 to WHTHILL  345.00
1  19056 19022 "1"   0   # LINE  from  MCCONICO 230.00 to DAVIS    230.00
0
#
#  Case Number 25
1  19315 19039 "1"   0   # LINE  from  PEACOCK  345.00 to WHTHILL  345.00
1  19072 19056 "1"   0   # LINE  from  HILLTOP  230.00 to MCCONICO 230.00
0
#
#  Case Number 26
1  19315 19039 "1"   0   # LINE  from  PEACOCK  345.00 to WHTHILL  345.00
1  19056 19310 "1"   0   # LINE  from  MCCONICO 230.00 to GRIFFITH 230.00
0
#
#  Case Number 27
1  19315 19039 "1"   0   # LINE  from  PEACOCK  345.00 to WHTHILL  345.00
1  19310 19314 "1"   0   # LINE  from  GRIFFITH 230.00 to PEACOCK  230.00
0
#
```

```
#  Case Number 28
1  19315 19039 "1"   0   # LINE  from  PEACOCK  345.00 to WHTHILL  345.00
1  19314 19072 "1"   0   # LINE  from  PEACOCK  230.00 to HILLTOP  230.00
0
#
#  Case Number 29
1  19315 19039 "1"   0   # LINE  from  PEACOCK  345.00 to WHTHILL  345.00
1  19022 19011 "1"   0   # LINE  from  DAVIS    230.00 to MEAD N   230.00
0
#
#  Case Number 30
1  19315 19039 "1"   0   # LINE  from  PEACOCK  345.00 to WHTHILL  345.00
1  19022 26046 "1"   0   # LINE  from  DAVIS    230.00 to MCCULLGH 230.00
0
#
#  Case Number 31
1  19315 19039 "1"   0   # LINE  from  PEACOCK  345.00 to WHTHILL  345.00
1  19022 19130 "1"   0   # LINE  from  DAVIS    230.00 to ZORB     230.00
0
#
#  Case Number 32
1  19315 19039 "1"   0   # LINE  from  PEACOCK  345.00 to WHTHILL  345.00
1  19130 19320 "1"   0   # LINE  from  ZORB     230.00 to TOPOCK   230.00
0
#
#  Case Number 33
1  19315 19039 "1"   0   # LINE  from  PEACOCK  345.00 to WHTHILL  345.00
1  19022 19320 "2"   0   # LINE  from  DAVIS    230.00 to TOPOCK   230.00
0
#
#  Case Number 34
1  19315 19039 "1"   0   # LINE  from  PEACOCK  345.00 to WHTHILL  345.00
1  19320 19316 "1"   0   # LINE  from  TOPOCK   230.00 to SOPOINT  230.00
0
#
#  Case Number 35
1  19315 19039 "1"   0   # LINE  from  PEACOCK  345.00 to WHTHILL  345.00
1  19320 19316 "2"   0   # LINE  from  TOPOCK   230.00 to SOPOINT  230.00
0
#
#  Case Number 36
1  19315 19039 "1"   0   # LINE  from  PEACOCK  345.00 to WHTHILL  345.00
1  19320 19019 "1"   0   # LINE  from  TOPOCK   230.00 to BLK MESA 230.00
0
#
#  Case Number 37
1  19315 19039 "1"   0   # LINE  from  PEACOCK  345.00 to WHTHILL  345.00
1  19320 19074 "1"   0   # LINE  from  TOPOCK   230.00 to N.HAVASU 230.00
0
#
#  Case Number 38
1  19315 19039 "1"   0   # LINE  from  PEACOCK  345.00 to WHTHILL  345.00
1  19052 14231 "1"   0   # LINE  from  LIBERTY  230.00 to WESTWING 230.00
0
#
#  Case Number 39
1  19315 19039 "1"   0   # LINE  from  PEACOCK  345.00 to WHTHILL  345.00
1  19012 19011 "1"   0   # LINE  from  MEAD S   230.00 to MEAD N   230.00
0
#
#  Case Number 40
1  19315 19039 "1"   0   # LINE  from  PEACOCK  345.00 to WHTHILL  345.00
1  19012 19011 "2"   0   # LINE  from  MEAD S   230.00 to MEAD N   230.00
0
#
#  Case Number 41
1  19315 19039 "1"   0   # LINE  from  PEACOCK  345.00 to WHTHILL  345.00
2  19037 19011 "1"   0   # TRAN  from  MEAD     345.00 to MEAD N   230.00
0
#
```

```
#  Case Number 42
1  19039 19037 "1"   0   # LINE  from  WHTHILL  345.00 to MEAD     345.00
2  19315 19314 "1"   0   # TRAN  from  PEACOCK  345.00 to PEACOCK  230.00
0
#
#  Case Number 43
1  19039 19037 "1"   0   # LINE  from  WHTHILL  345.00 to MEAD     345.00
1  19056 19022 "1"   0   # LINE  from  MCCONICO 230.00 to DAVIS    230.00
0
#
#  Case Number 44
1  19039 19037 "1"   0   # LINE  from  WHTHILL  345.00 to MEAD     345.00
1  19072 19056 "1"   0   # LINE  from  HILLTOP  230.00 to MCCONICO 230.00
0
#
#  Case Number 45
1  19039 19037 "1"   0   # LINE  from  WHTHILL  345.00 to MEAD     345.00
1  19056 19310 "1"   0   # LINE  from  MCCONICO 230.00 to GRIFFITH 230.00
0
#
#  Case Number 46
1  19039 19037 "1"   0   # LINE  from  WHTHILL  345.00 to MEAD     345.00
1  19310 19314 "1"   0   # LINE  from  GRIFFITH 230.00 to PEACOCK  230.00
0
#
#  Case Number 47
1  19039 19037 "1"   0   # LINE  from  WHTHILL  345.00 to MEAD     345.00
1  19314 19072 "1"   0   # LINE  from  PEACOCK  230.00 to HILLTOP  230.00
0
#
#  Case Number 48
1  19039 19037 "1"   0   # LINE  from  WHTHILL  345.00 to MEAD     345.00
1  19022 19011 "1"   0   # LINE  from  DAVIS    230.00 to MEAD N   230.00
0
#
#  Case Number 49
1  19039 19037 "1"   0   # LINE  from  WHTHILL  345.00 to MEAD     345.00
1  19022 26046 "1"   0   # LINE  from  DAVIS    230.00 to MCCULLGH 230.00
0
#
#  Case Number 50
1  19039 19037 "1"   0   # LINE  from  WHTHILL  345.00 to MEAD     345.00
1  19022 19130 "1"   0   # LINE  from  DAVIS    230.00 to ZORB     230.00
0
#
#  Case Number 51
1  19039 19037 "1"   0   # LINE  from  WHTHILL  345.00 to MEAD     345.00
1  19130 19320 "1"   0   # LINE  from  ZORB     230.00 to TOPOCK   230.00
0
#
#  Case Number 52
1  19039 19037 "1"   0   # LINE  from  WHTHILL  345.00 to MEAD     345.00
1  19022 19320 "2"   0   # LINE  from  DAVIS    230.00 to TOPOCK   230.00
0
#
#  Case Number 53
1  19039 19037 "1"   0   # LINE  from  WHTHILL  345.00 to MEAD     345.00
1  19320 19316 "1"   0   # LINE  from  TOPOCK   230.00 to SOPOINT  230.00
0
#
#  Case Number 54
1  19039 19037 "1"   0   # LINE  from  WHTHILL  345.00 to MEAD     345.00
1  19320 19316 "2"   0   # LINE  from  TOPOCK   230.00 to SOPOINT  230.00
0
#
#  Case Number 55
1  19039 19037 "1"   0   # LINE  from  WHTHILL  345.00 to MEAD     345.00
1  19320 19019 "1"   0   # LINE  from  TOPOCK   230.00 to BLK MESA 230.00
0
#
```

```
#  Case Number 56
1  19039 19037 "1"   0   # LINE  from  WHTHILL  345.00 to MEAD     345.00
1  19320 19074 "1"   0   # LINE  from  TOPOCK   230.00 to N.HAVASU 230.00
0
#
#  Case Number 57
1  19039 19037 "1"   0   # LINE  from  WHTHILL  345.00 to MEAD     345.00
1  19052 14231 "1"   0   # LINE  from  LIBERTY  230.00 to WESTWING 230.00
0
#
#  Case Number 58
1  19039 19037 "1"   0   # LINE  from  WHTHILL  345.00 to MEAD     345.00
1  19012 19011 "1"   0   # LINE  from  MEAD S   230.00 to MEAD N   230.00
0
#
#  Case Number 59
1  19039 19037 "1"   0   # LINE  from  WHTHILL  345.00 to MEAD     345.00
1  19012 19011 "2"   0   # LINE  from  MEAD S   230.00 to MEAD N   230.00
0
#
#  Case Number 60
1  19039 19037 "1"   0   # LINE  from  WHTHILL  345.00 to MEAD     345.00
2  19037 19011 "1"   0   # TRAN  from  MEAD     345.00 to MEAD N   230.00
0
#
#  Case Number 61
2  19315 19314 "1"   0   # TRAN  from  PEACOCK  345.00 to PEACOCK  230.00
1  19056 19022 "1"   0   # LINE  from  MCCONICO 230.00 to DAVIS    230.00
0
#
#  Case Number 62
2  19315 19314 "1"   0   # TRAN  from  PEACOCK  345.00 to PEACOCK  230.00
1  19072 19056 "1"   0   # LINE  from  HILLTOP  230.00 to MCCONICO 230.00
0
#
#  Case Number 63
2  19315 19314 "1"   0   # TRAN  from  PEACOCK  345.00 to PEACOCK  230.00
1  19056 19310 "1"   0   # LINE  from  MCCONICO 230.00 to GRIFFITH 230.00
0
#
#  Case Number 64
2  19315 19314 "1"   0   # TRAN  from  PEACOCK  345.00 to PEACOCK  230.00
1  19310 19314 "1"   0   # LINE  from  GRIFFITH 230.00 to PEACOCK  230.00
0
#
#  Case Number 65
2  19315 19314 "1"   0   # TRAN  from  PEACOCK  345.00 to PEACOCK  230.00
1  19314 19072 "1"   0   # LINE  from  PEACOCK  230.00 to HILLTOP  230.00
0
#
#  Case Number 66
2  19315 19314 "1"   0   # TRAN  from  PEACOCK  345.00 to PEACOCK  230.00
1  19022 19011 "1"   0   # LINE  from  DAVIS    230.00 to MEAD N   230.00
0
#
#  Case Number 67
2  19315 19314 "1"   0   # TRAN  from  PEACOCK  345.00 to PEACOCK  230.00
1  19022 26046 "1"   0   # LINE  from  DAVIS    230.00 to MCCULLGH 230.00
0
#
#  Case Number 68
2  19315 19314 "1"   0   # TRAN  from  PEACOCK  345.00 to PEACOCK  230.00
1  19022 19130 "1"   0   # LINE  from  DAVIS    230.00 to ZORB     230.00
0
#
#  Case Number 69
2  19315 19314 "1"   0   # TRAN  from  PEACOCK  345.00 to PEACOCK  230.00
1  19130 19320 "1"   0   # LINE  from  ZORB     230.00 to TOPOCK   230.00
0
#
```

```
#  Case Number 70
2 19315 19314 "1"   0   # TRAN  from  PEACOCK  345.00 to PEACOCK  230.00
1 19022 19320 "2"   0   # LINE  from  DAVIS    230.00 to TOPOCK   230.00
0
#
#  Case Number 71
2 19315 19314 "1"   0   # TRAN  from  PEACOCK  345.00 to PEACOCK  230.00
1 19320 19316 "1"   0   # LINE  from  TOPOCK   230.00 to SOPOINT  230.00
0
#
#  Case Number 72
2 19315 19314 "1"   0   # TRAN  from  PEACOCK  345.00 to PEACOCK  230.00
1 19320 19316 "2"   0   # LINE  from  TOPOCK   230.00 to SOPOINT  230.00
0
#
#  Case Number 73
2 19315 19314 "1"   0   # TRAN  from  PEACOCK  345.00 to PEACOCK  230.00
1 19320 19019 "1"   0   # LINE  from  TOPOCK   230.00 to BLK MESA 230.00
0
#
#  Case Number 74
2 19315 19314 "1"   0   # TRAN  from  PEACOCK  345.00 to PEACOCK  230.00
1 19320 19074 "1"   0   # LINE  from  TOPOCK   230.00 to N.HAVASU 230.00
0
#
#  Case Number 75
2 19315 19314 "1"   0   # TRAN  from  PEACOCK  345.00 to PEACOCK  230.00
1 19052 14231 "1"   0   # LINE  from  LIBERTY  230.00 to WESTWING 230.00
0
#
#  Case Number 76
2 19315 19314 "1"   0   # TRAN  from  PEACOCK  345.00 to PEACOCK  230.00
1 19012 19011 "1"   0   # LINE  from  MEAD S   230.00 to MEAD N   230.00
0
#
#  Case Number 77
2 19315 19314 "1"   0   # TRAN  from  PEACOCK  345.00 to PEACOCK  230.00
1 19012 19011 "2"   0   # LINE  from  MEAD S   230.00 to MEAD N   230.00
0
#
#  Case Number 78
2 19315 19314 "1"   0   # TRAN  from  PEACOCK  345.00 to PEACOCK  230.00
2 19037 19011 "1"   0   # LINE  from  MEAD     345.00 to MEAD N   230.00
0
#
#  Case Number 79
1 19056 19022 "1"   0   # LINE  from  MCCONICO 230.00 to DAVIS    230.00
1 19072 19056 "1"   0   # LINE  from  HILLTOP  230.00 to MCCONICO 230.00
0
#
#  Case Number 80
1 19056 19022 "1"   0   # LINE  from  MCCONICO 230.00 to DAVIS    230.00
1 19056 19310 "1"   0   # LINE  from  MCCONICO 230.00 to GRIFFITH 230.00
0
#
#  Case Number 81
1 19056 19022 "1"   0   # LINE  from  MCCONICO 230.00 to DAVIS    230.00
1 19310 19314 "1"   0   # LINE  from  GRIFFITH 230.00 to PEACOCK  230.00
0
#
#  Case Number 82
1 19056 19022 "1"   0   # LINE  from  MCCONICO 230.00 to DAVIS    230.00
1 19314 19072 "1"   0   # LINE  from  PEACOCK  230.00 to HILLTOP  230.00
0
#
#  Case Number 83
1 19056 19022 "1"   0   # LINE  from  MCCONICO 230.00 to DAVIS    230.00
1 19022 19011 "1"   0   # LINE  from  DAVIS    230.00 to MEAD N   230.00
0
#
```

```
#  Case Number 84
1  19056 19022 "1"   0   # LINE  from  MCCONICO 230.00 to DAVIS    230.00
1  19022 26046 "1"   0   # LINE  from  DAVIS    230.00 to MCCULLGH 230.00
0
#
#  Case Number 85
1  19056 19022 "1"   0   # LINE  from  MCCONICO 230.00 to DAVIS    230.00
1  19022 19130 "1"   0   # LINE  from  DAVIS    230.00 to ZORB     230.00
0
#
#  Case Number 86
1  19056 19022 "1"   0   # LINE  from  MCCONICO 230.00 to DAVIS    230.00
1  19130 19320 "1"   0   # LINE  from  ZORB     230.00 to TOPOCK   230.00
0
#
#  Case Number 87
1  19056 19022 "1"   0   # LINE  from  MCCONICO 230.00 to DAVIS    230.00
1  19022 19320 "2"   0   # LINE  from  DAVIS    230.00 to TOPOCK   230.00
0
#
#  Case Number 88
1  19056 19022 "1"   0   # LINE  from  MCCONICO 230.00 to DAVIS    230.00
1  19320 19316 "1"   0   # LINE  from  TOPOCK   230.00 to SOPOINT  230.00
0
#
#  Case Number 89
1  19056 19022 "1"   0   # LINE  from  MCCONICO 230.00 to DAVIS    230.00
1  19320 19316 "2"   0   # LINE  from  TOPOCK   230.00 to SOPOINT  230.00
0
#
#  Case Number 90
1  19056 19022 "1"   0   # LINE  from  MCCONICO 230.00 to DAVIS    230.00
1  19320 19019 "1"   0   # LINE  from  TOPOCK   230.00 to BLK MESA 230.00
0
#
#  Case Number 91
1  19056 19022 "1"   0   # LINE  from  MCCONICO 230.00 to DAVIS    230.00
1  19320 19074 "1"   0   # LINE  from  TOPOCK   230.00 to N.HAVASU 230.00
0
#
#  Case Number 92
1  19056 19022 "1"   0   # LINE  from  MCCONICO 230.00 to DAVIS    230.00
1  19052 14231 "1"   0   # LINE  from  LIBERTY  230.00 to WESTWING 230.00
0
#
#  Case Number 93
1  19056 19022 "1"   0   # LINE  from  MCCONICO 230.00 to DAVIS    230.00
1  19012 19011 "1"   0   # LINE  from  MEAD S   230.00 to MEAD N   230.00
0
#
#  Case Number 94
1  19056 19022 "1"   0   # LINE  from  MCCONICO 230.00 to DAVIS    230.00
1  19012 19011 "2"   0   # LINE  from  MEAD S   230.00 to MEAD N   230.00
0
#
#  Case Number 95
1  19056 19022 "1"   0   # LINE  from  MCCONICO 230.00 to DAVIS    230.00
2  19037 19011 "1"   0   # TRAN  from  MEAD     345.00 to MEAD N   230.00
0
#
#  Case Number 96
1  19072 19056 "1"   0   # LINE  from  HILLTOP  230.00 to MCCONICO 230.00
1  19056 19310 "1"   0   # LINE  from  MCCONICO 230.00 to GRIFFITH 230.00
0
#
#  Case Number 97
1  19072 19056 "1"   0   # LINE  from  HILLTOP  230.00 to MCCONICO 230.00
1  19310 19314 "1"   0   # LINE  from  GRIFFITH 230.00 to PEACOCK  230.00
0
#
```

```
#  Case Number 98
1  19072 19056 "1"   0   # LINE  from  HILLTOP  230.00 to MCCONICO 230.00
1  19314 19072 "1"   0   # LINE  from  PEACOCK  230.00 to HILLTOP  230.00
0
#
#  Case Number 99
1  19072 19056 "1"   0   # LINE  from  HILLTOP  230.00 to MCCONICO 230.00
1  19022 19011 "1"   0   # LINE  from  DAVIS    230.00 to MEAD N   230.00
0
#
#  Case Number 100
1  19072 19056 "1"   0   # LINE  from  HILLTOP  230.00 to MCCONICO 230.00
1  19022 26046 "1"   0   # LINE  from  DAVIS    230.00 to MCCULLGH 230.00
0
#
#  Case Number 101
1  19072 19056 "1"   0   # LINE  from  HILLTOP  230.00 to MCCONICO 230.00
1  19022 19130 "1"   0   # LINE  from  DAVIS    230.00 to ZORB     230.00
0
#
#  Case Number 102
1  19072 19056 "1"   0   # LINE  from  HILLTOP  230.00 to MCCONICO 230.00
1  19130 19320 "1"   0   # LINE  from  ZORB     230.00 to TOPOCK   230.00
0
#
#  Case Number 103
1  19072 19056 "1"   0   # LINE  from  HILLTOP  230.00 to MCCONICO 230.00
1  19022 19320 "2"   0   # LINE  from  DAVIS    230.00 to TOPOCK   230.00
0
#
#  Case Number 104
1  19072 19056 "1"   0   # LINE  from  HILLTOP  230.00 to MCCONICO 230.00
1  19320 19316 "1"   0   # LINE  from  TOPOCK   230.00 to SOPOINT  230.00
0
#
#  Case Number 105
1  19072 19056 "1"   0   # LINE  from  HILLTOP  230.00 to MCCONICO 230.00
1  19320 19316 "2"   0   # LINE  from  TOPOCK   230.00 to SOPOINT  230.00
0
#
#  Case Number 106
1  19072 19056 "1"   0   # LINE  from  HILLTOP  230.00 to MCCONICO 230.00
1  19320 19019 "1"   0   # LINE  from  TOPOCK   230.00 to BLK MESA 230.00
0
#
#  Case Number 107
1  19072 19056 "1"   0   # LINE  from  HILLTOP  230.00 to MCCONICO 230.00
1  19320 19074 "1"   0   # LINE  from  TOPOCK   230.00 to N.HAVASU 230.00
0
#
#  Case Number 108
1  19072 19056 "1"   0   # LINE  from  HILLTOP  230.00 to MCCONICO 230.00
1  19052 14231 "1"   0   # LINE  from  LIBERTY  230.00 to WESTWING 230.00
0
#
#  Case Number 109
1  19072 19056 "1"   0   # LINE  from  HILLTOP  230.00 to MCCONICO 230.00
1  19012 19011 "1"   0   # LINE  from  MEAD S   230.00 to MEAD N   230.00
0
#
#  Case Number 110
1  19072 19056 "1"   0   # LINE  from  HILLTOP  230.00 to MCCONICO 230.00
1  19012 19011 "2"   0   # LINE  from  MEAD S   230.00 to MEAD N   230.00
0
#
#  Case Number 111
1  19072 19056 "1"   0   # LINE  from  HILLTOP  230.00 to MCCONICO 230.00
2  19037 19011 "1"   0   # TRAN  from  MEAD     345.00 to MEAD N   230.00
0
#
```

```
#  Case Number 112
1  19056 19310 "1"   0   # LINE  from  MCCONICO 230.00 to GRIFFITH 230.00
1  19310 19314 "1"   0   # LINE  from  GRIFFITH 230.00 to PEACOCK  230.00
0
#
#  Case Number 113
1  19056 19310 "1"   0   # LINE  from  MCCONICO 230.00 to GRIFFITH 230.00
1  19314 19072 "1"   0   # LINE  from  PEACOCK  230.00 to HILLTOP  230.00
0
#
#  Case Number 114
1  19056 19310 "1"   0   # LINE  from  MCCONICO 230.00 to GRIFFITH 230.00
1  19022 19011 "1"   0   # LINE  from  DAVIS    230.00 to MEAD N   230.00
0
#
#  Case Number 115
1  19056 19310 "1"   0   # LINE  from  MCCONICO 230.00 to GRIFFITH 230.00
1  19022 26046 "1"   0   # LINE  from  DAVIS    230.00 to MCCULLGH 230.00
0
#
#  Case Number 116
1  19056 19310 "1"   0   # LINE  from  MCCONICO 230.00 to GRIFFITH 230.00
1  19022 19130 "1"   0   # LINE  from  DAVIS    230.00 to ZORB     230.00
0
#
#  Case Number 117
1  19056 19310 "1"   0   # LINE  from  MCCONICO 230.00 to GRIFFITH 230.00
1  19130 19320 "1"   0   # LINE  from  ZORB     230.00 to TOPOCK   230.00
0
#
#  Case Number 118
1  19056 19310 "1"   0   # LINE  from  MCCONICO 230.00 to GRIFFITH 230.00
1  19022 19320 "2"   0   # LINE  from  DAVIS    230.00 to TOPOCK   230.00
0
#
#  Case Number 119
1  19056 19310 "1"   0   # LINE  from  MCCONICO 230.00 to GRIFFITH 230.00
1  19320 19316 "1"   0   # LINE  from  TOPOCK   230.00 to SOPOINT  230.00
0
#
#  Case Number 120
1  19056 19310 "1"   0   # LINE  from  MCCONICO 230.00 to GRIFFITH 230.00
1  19320 19316 "2"   0   # LINE  from  TOPOCK   230.00 to SOPOINT  230.00
0
#
#  Case Number 121
1  19056 19310 "1"   0   # LINE  from  MCCONICO 230.00 to GRIFFITH 230.00
1  19320 19019 "1"   0   # LINE  from  TOPOCK   230.00 to BLK MESA 230.00
0
#
#  Case Number 122
1  19056 19310 "1"   0   # LINE  from  MCCONICO 230.00 to GRIFFITH 230.00
1  19320 19074 "1"   0   # LINE  from  TOPOCK   230.00 to N.HAVASU 230.00
0
#
#  Case Number 123
1  19056 19310 "1"   0   # LINE  from  MCCONICO 230.00 to GRIFFITH 230.00
1  19052 14231 "1"   0   # LINE  from  LIBERTY  230.00 to WESTWING 230.00
0
#
#  Case Number 124
1  19056 19310 "1"   0   # LINE  from  MCCONICO 230.00 to GRIFFITH 230.00
1  19012 19011 "1"   0   # LINE  from  MEAD S   230.00 to MEAD N   230.00
0
#
#  Case Number 125
1  19056 19310 "1"   0   # LINE  from  MCCONICO 230.00 to GRIFFITH 230.00
1  19012 19011 "2"   0   # LINE  from  MEAD S   230.00 to MEAD N   230.00
0
#
```

```
#  Case Number 126
1  19056 19310 "1"   0   # LINE  from  MCCONICO 230.00 to GRIFFITH 230.00
2  19037 19011 "1"   0   # TRAN  from  MEAD     345.00 to MEAD N   230.00
0
#
#  Case Number 127
1  19310 19314 "1"   0   # LINE  from  GRIFFITH 230.00 to PEACOCK  230.00
1  19314 19072 "1"   0   # LINE  from  PEACOCK  230.00 to HILLTOP  230.00
0
#
#  Case Number 128
1  19310 19314 "1"   0   # LINE  from  GRIFFITH 230.00 to PEACOCK  230.00
1  19022 19011 "1"   0   # LINE  from  DAVIS    230.00 to MEAD N   230.00
0
#
#  Case Number 129
1  19310 19314 "1"   0   # LINE  from  GRIFFITH 230.00 to PEACOCK  230.00
1  19022 26046 "1"   0   # LINE  from  DAVIS    230.00 to MCCULLGH 230.00
0
#
#  Case Number 130
1  19310 19314 "1"   0   # LINE  from  GRIFFITH 230.00 to PEACOCK  230.00
1  19022 19130 "1"   0   # LINE  from  DAVIS    230.00 to ZORB     230.00
0
#
#  Case Number 131
1  19310 19314 "1"   0   # LINE  from  GRIFFITH 230.00 to PEACOCK  230.00
1  19130 19320 "1"   0   # LINE  from  ZORB     230.00 to TOPOCK   230.00
0
#
#  Case Number 132
1  19310 19314 "1"   0   # LINE  from  GRIFFITH 230.00 to PEACOCK  230.00
1  19022 19320 "2"   0   # LINE  from  DAVIS    230.00 to TOPOCK   230.00
0
#
#  Case Number 133
1  19310 19314 "1"   0   # LINE  from  GRIFFITH 230.00 to PEACOCK  230.00
1  19320 19316 "1"   0   # LINE  from  TOPOCK   230.00 to SOPOINT  230.00
0
#
#  Case Number 134
1  19310 19314 "1"   0   # LINE  from  GRIFFITH 230.00 to PEACOCK  230.00
1  19320 19316 "2"   0   # LINE  from  TOPOCK   230.00 to SOPOINT  230.00
0
#
#  Case Number 135
1  19310 19314 "1"   0   # LINE  from  GRIFFITH 230.00 to PEACOCK  230.00
1  19320 19019 "1"   0   # LINE  from  TOPOCK   230.00 to BLK MESA 230.00
0
#
#  Case Number 136
1  19310 19314 "1"   0   # LINE  from  GRIFFITH 230.00 to PEACOCK  230.00
1  19320 19074 "1"   0   # LINE  from  TOPOCK   230.00 to N.HAVASU 230.00
0
#
#  Case Number 137
1  19310 19314 "1"   0   # LINE  from  GRIFFITH 230.00 to PEACOCK  230.00
1  19052 14231 "1"   0   # LINE  from  LIBERTY  230.00 to WESTWING 230.00
0
#
#  Case Number 138
1  19310 19314 "1"   0   # LINE  from  GRIFFITH 230.00 to PEACOCK  230.00
1  19012 19011 "1"   0   # LINE  from  MEAD S   230.00 to MEAD N   230.00
0
#
#  Case Number 139
1  19310 19314 "1"   0   # LINE  from  GRIFFITH 230.00 to PEACOCK  230.00
1  19012 19011 "2"   0   # LINE  from  MEAD S   230.00 to MEAD N   230.00
0
#
```

```
#  Case Number 140
1 19310 19314 "1"   0   # LINE  from  GRIFFITH 230.00 to PEACOCK  230.00
2 19037 19011 "1"   0   # TRAN  from  MEAD     345.00 to MEAD N   230.00
0
#
#  Case Number 141
1 19314 19072 "1"   0   # LINE  from  PEACOCK  230.00 to HILLTOP  230.00
1 19022 19011 "1"   0   # LINE  from  DAVIS    230.00 to MEAD N   230.00
0
#
#  Case Number 142
1 19314 19072 "1"   0   # LINE  from  PEACOCK  230.00 to HILLTOP  230.00
1 19022 26046 "1"   0   # LINE  from  DAVIS    230.00 to MCCULLGH 230.00
0
#
#  Case Number 143
1 19314 19072 "1"   0   # LINE  from  PEACOCK  230.00 to HILLTOP  230.00
1 19022 19130 "1"   0   # LINE  from  DAVIS    230.00 to ZORB     230.00
0
#
#  Case Number 144
1 19314 19072 "1"   0   # LINE  from  PEACOCK  230.00 to HILLTOP  230.00
1 19130 19320 "1"   0   # LINE  from  ZORB     230.00 to TOPOCK   230.00
0
#
#  Case Number 145
1 19314 19072 "1"   0   # LINE  from  PEACOCK  230.00 to HILLTOP  230.00
1 19022 19320 "2"   0   # LINE  from  DAVIS    230.00 to TOPOCK   230.00
0
#
#  Case Number 146
1 19314 19072 "1"   0   # LINE  from  PEACOCK  230.00 to HILLTOP  230.00
1 19320 19316 "1"   0   # LINE  from  TOPOCK   230.00 to SOPOINT  230.00
0
#
#  Case Number 147
1 19314 19072 "1"   0   # LINE  from  PEACOCK  230.00 to HILLTOP  230.00
1 19320 19316 "2"   0   # LINE  from  TOPOCK   230.00 to SOPOINT  230.00
0
#
#  Case Number 148
1 19314 19072 "1"   0   # LINE  from  PEACOCK  230.00 to HILLTOP  230.00
1 19320 19019 "1"   0   # LINE  from  TOPOCK   230.00 to BLK MESA 230.00
0
#
#  Case Number 149
1 19314 19072 "1"   0   # LINE  from  PEACOCK  230.00 to HILLTOP  230.00
1 19320 19074 "1"   0   # LINE  from  TOPOCK   230.00 to N.HAVASU 230.00
0
#
#  Case Number 150
1 19314 19072 "1"   0   # LINE  from  PEACOCK  230.00 to HILLTOP  230.00
1 19052 14231 "1"   0   # LINE  from  LIBERTY  230.00 to WESTWING 230.00
0
#
#  Case Number 151
1 19314 19072 "1"   0   # LINE  from  PEACOCK  230.00 to HILLTOP  230.00
1 19012 19011 "1"   0   # LINE  from  MEAD S   230.00 to MEAD N   230.00
0
#
#  Case Number 152
1 19314 19072 "1"   0   # LINE  from  PEACOCK  230.00 to HILLTOP  230.00
1 19012 19011 "2"   0   # LINE  from  MEAD S   230.00 to MEAD N   230.00
0
#
#  Case Number 153
1 19314 19072 "1"   0   # LINE  from  PEACOCK  230.00 to HILLTOP  230.00
2 19037 19011 "1"   0   # TRAN  from  MEAD     345.00 to MEAD N   230.00
0
#
```

```
#  Case Number 154
1  19022 19011 "1"   0   # LINE  from  DAVIS   230.00 to MEAD N  230.00
1  19022 26046 "1"   0   # LINE  from  DAVIS   230.00 to MCCULLGH 230.00
0
#
#  Case Number 155
1  19022 19011 "1"   0   # LINE  from  DAVIS   230.00 to MEAD N  230.00
1  19022 19130 "1"   0   # LINE  from  DAVIS   230.00 to ZORB    230.00
0
#
#  Case Number 156
1  19022 19011 "1"   0   # LINE  from  DAVIS   230.00 to MEAD N  230.00
1  19130 19320 "1"   0   # LINE  from  ZORB    230.00 to TOPOCK  230.00
0
#
#  Case Number 157
1  19022 19011 "1"   0   # LINE  from  DAVIS   230.00 to MEAD N  230.00
1  19022 19320 "2"   0   # LINE  from  DAVIS   230.00 to TOPOCK  230.00
0
#
#  Case Number 158
1  19022 19011 "1"   0   # LINE  from  DAVIS   230.00 to MEAD N  230.00
1  19320 19316 "1"   0   # LINE  from  TOPOCK  230.00 to SOPOINT 230.00
0
#
#  Case Number 159
1  19022 19011 "1"   0   # LINE  from  DAVIS   230.00 to MEAD N  230.00
1  19320 19316 "2"   0   # LINE  from  TOPOCK  230.00 to SOPOINT 230.00
0
#
#  Case Number 160
1  19022 19011 "1"   0   # LINE  from  DAVIS   230.00 to MEAD N  230.00
1  19320 19019 "1"   0   # LINE  from  TOPOCK  230.00 to BLK MESA 230.00
0
#
#  Case Number 161
1  19022 19011 "1"   0   # LINE  from  DAVIS   230.00 to MEAD N  230.00
1  19320 19074 "1"   0   # LINE  from  TOPOCK  230.00 to N.HAVASU 230.00
0
#
#  Case Number 162
1  19022 19011 "1"   0   # LINE  from  DAVIS   230.00 to MEAD N  230.00
1  19052 14231 "1"   0   # LINE  from  LIBERTY 230.00 to WESTWING 230.00
0
#
#  Case Number 163
1  19022 19011 "1"   0   # LINE  from  DAVIS   230.00 to MEAD N  230.00
1  19012 19011 "1"   0   # LINE  from  MEAD S  230.00 to MEAD N  230.00
0
#
#  Case Number 164
1  19022 19011 "1"   0   # LINE  from  DAVIS   230.00 to MEAD N  230.00
1  19012 19011 "2"   0   # LINE  from  MEAD S  230.00 to MEAD N  230.00
0
#
#  Case Number 165
1  19022 19011 "1"   0   # LINE  from  DAVIS   230.00 to MEAD N  230.00
2  19037 19011 "1"   0   # TRAN  from  MEAD    345.00 to MEAD N  230.00
0
#
#  Case Number 166
1  19022 26046 "1"   0   # LINE  from  DAVIS   230.00 to MCCULLGH 230.00
1  19022 19130 "1"   0   # LINE  from  DAVIS   230.00 to ZORB    230.00
0
#
#  Case Number 167
1  19022 26046 "1"   0   # LINE  from  DAVIS   230.00 to MCCULLGH 230.00
1  19130 19320 "1"   0   # LINE  from  ZORB    230.00 to TOPOCK  230.00
0
#
```

```
#  Case Number 168
1  19022 26046 "1"   0   # LINE  from  DAVIS   230.00 to MCCULLGH 230.00
1  19022 19320 "2"   0   # LINE  from  DAVIS   230.00 to TOPOCK  230.00
0
#
#  Case Number 169
1  19022 26046 "1"   0   # LINE  from  DAVIS   230.00 to MCCULLGH 230.00
1  19320 19316 "1"   0   # LINE  from  TOPOCK  230.00 to SOPOINT  230.00
0
#
#  Case Number 170
1  19022 26046 "1"   0   # LINE  from  DAVIS   230.00 to MCCULLGH 230.00
1  19320 19316 "2"   0   # LINE  from  TOPOCK  230.00 to SOPOINT  230.00
0
#
#  Case Number 171
1  19022 26046 "1"   0   # LINE  from  DAVIS   230.00 to MCCULLGH 230.00
1  19320 19019 "1"   0   # LINE  from  TOPOCK  230.00 to BLK MESA 230.00
0
#
#  Case Number 172
1  19022 26046 "1"   0   # LINE  from  DAVIS   230.00 to MCCULLGH 230.00
1  19320 19074 "1"   0   # LINE  from  TOPOCK  230.00 to N.HAVASU 230.00
0
#
#  Case Number 173
1  19022 26046 "1"   0   # LINE  from  DAVIS   230.00 to MCCULLGH 230.00
1  19052 14231 "1"   0   # LINE  from  LIBERTY 230.00 to WESTWING 230.00
0
#
#  Case Number 174
1  19022 26046 "1"   0   # LINE  from  DAVIS   230.00 to MCCULLGH 230.00
1  19012 19011 "1"   0   # LINE  from  MEAD S  230.00 to MEAD N   230.00
0
#
#  Case Number 175
1  19022 26046 "1"   0   # LINE  from  DAVIS   230.00 to MCCULLGH 230.00
1  19012 19011 "2"   0   # LINE  from  MEAD S  230.00 to MEAD N   230.00
0
#
#  Case Number 176
1  19022 26046 "1"   0   # LINE  from  DAVIS   230.00 to MCCULLGH 230.00
2  19037 19011 "1"   0   # TRAN  from  MEAD    345.00 to MEAD N   230.00
0
#
#  Case Number 177
1  19022 19130 "1"   0   # LINE  from  DAVIS   230.00 to ZORB     230.00
1  19130 19320 "1"   0   # LINE  from  ZORB    230.00 to TOPOCK   230.00
0
#
#  Case Number 178
1  19022 19130 "1"   0   # LINE  from  DAVIS   230.00 to ZORB     230.00
1  19022 19320 "2"   0   # LINE  from  DAVIS   230.00 to TOPOCK   230.00
0
#
#  Case Number 179
1  19022 19130 "1"   0   # LINE  from  DAVIS   230.00 to ZORB     230.00
1  19320 19316 "1"   0   # LINE  from  TOPOCK  230.00 to SOPOINT  230.00
0
#
#  Case Number 180
1  19022 19130 "1"   0   # LINE  from  DAVIS   230.00 to ZORB     230.00
1  19320 19316 "2"   0   # LINE  from  TOPOCK  230.00 to SOPOINT  230.00
0
#
#  Case Number 181
1  19022 19130 "1"   0   # LINE  from  DAVIS   230.00 to ZORB     230.00
1  19320 19019 "1"   0   # LINE  from  TOPOCK  230.00 to BLK MESA 230.00
0
#
```

```
#  Case Number 182
1 19022 19130 "1"   0   # LINE  from  DAVIS    230.00 to ZORB     230.00
1 19320 19074 "1"   0   # LINE  from  TOPOCK   230.00 to N.HAVASU 230.00
0
#
#  Case Number 183
1 19022 19130 "1"   0   # LINE  from  DAVIS    230.00 to ZORB     230.00
1 19052 14231 "1"   0   # LINE  from  LIBERTY  230.00 to WESTWING 230.00
0
#
#  Case Number 184
1 19022 19130 "1"   0   # LINE  from  DAVIS    230.00 to ZORB     230.00
1 19012 19011 "1"   0   # LINE  from  MEAD S   230.00 to MEAD N   230.00
0
#
#  Case Number 185
1 19022 19130 "1"   0   # LINE  from  DAVIS    230.00 to ZORB     230.00
1 19012 19011 "2"   0   # LINE  from  MEAD S   230.00 to MEAD N   230.00
0
#
#  Case Number 186
1 19022 19130 "1"   0   # LINE  from  DAVIS    230.00 to ZORB     230.00
2 19037 19011 "1"   0   # TRAN  from  MEAD     345.00 to MEAD N   230.00
0
#
#  Case Number 187
1 19130 19320 "1"   0   # LINE  from  ZORB     230.00 to TOPOCK   230.00
1 19022 19320 "2"   0   # LINE  from  DAVIS    230.00 to TOPOCK   230.00
0
#
#  Case Number 188
1 19130 19320 "1"   0   # LINE  from  ZORB     230.00 to TOPOCK   230.00
1 19320 19316 "1"   0   # LINE  from  TOPOCK   230.00 to SOPOINT  230.00
0
#
#  Case Number 189
1 19130 19320 "1"   0   # LINE  from  ZORB     230.00 to TOPOCK   230.00
1 19320 19316 "2"   0   # LINE  from  TOPOCK   230.00 to SOPOINT  230.00
0
#
#  Case Number 190
1 19130 19320 "1"   0   # LINE  from  ZORB     230.00 to TOPOCK   230.00
1 19320 19019 "1"   0   # LINE  from  TOPOCK   230.00 to BLK MESA 230.00
0
#
#  Case Number 191
1 19130 19320 "1"   0   # LINE  from  ZORB     230.00 to TOPOCK   230.00
1 19320 19074 "1"   0   # LINE  from  TOPOCK   230.00 to N.HAVASU 230.00
0
#
#  Case Number 192
1 19130 19320 "1"   0   # LINE  from  ZORB     230.00 to TOPOCK   230.00
1 19052 14231 "1"   0   # LINE  from  LIBERTY  230.00 to WESTWING 230.00
0
#
#  Case Number 193
1 19130 19320 "1"   0   # LINE  from  ZORB     230.00 to TOPOCK   230.00
1 19012 19011 "1"   0   # LINE  from  MEAD S   230.00 to MEAD N   230.00
0
#
#  Case Number 194
1 19130 19320 "1"   0   # LINE  from  ZORB     230.00 to TOPOCK   230.00
1 19012 19011 "2"   0   # LINE  from  MEAD S   230.00 to MEAD N   230.00
0
#
#  Case Number 195
1 19130 19320 "1"   0   # LINE  from  ZORB     230.00 to TOPOCK   230.00
2 19037 19011 "1"   0   # TRAN  from  MEAD     345.00 to MEAD N   230.00
0
#
```

```
#  Case Number 196
1  19022 19320 "2"   0    # LINE  from  DAVIS    230.00 to TOPOCK   230.00
1  19320 19316 "1"   0    # LINE  from  TOPOCK   230.00 to SOPOINT  230.00
0
#
#  Case Number 197
1  19022 19320 "2"   0    # LINE  from  DAVIS    230.00 to TOPOCK   230.00
1  19320 19316 "2"   0    # LINE  from  TOPOCK   230.00 to SOPOINT  230.00
0
#
#  Case Number 198
1  19022 19320 "2"   0    # LINE  from  DAVIS    230.00 to TOPOCK   230.00
1  19320 19019 "1"   0    # LINE  from  TOPOCK   230.00 to BLK MESA 230.00
0
#
#  Case Number 199
1  19022 19320 "2"   0    # LINE  from  DAVIS    230.00 to TOPOCK   230.00
1  19320 19074 "1"   0    # LINE  from  TOPOCK   230.00 to N.HAVASU 230.00
0
#
#  Case Number 200
1  19022 19320 "2"   0    # LINE  from  DAVIS    230.00 to TOPOCK   230.00
1  19052 14231 "1"   0    # LINE  from  LIBERTY  230.00 to WESTWING 230.00
0
#
#  Case Number 201
1  19022 19320 "2"   0    # LINE  from  DAVIS    230.00 to TOPOCK   230.00
1  19012 19011 "1"   0    # LINE  from  MEAD S   230.00 to MEAD N   230.00
0
#
#  Case Number 202
1  19022 19320 "2"   0    # LINE  from  DAVIS    230.00 to TOPOCK   230.00
1  19012 19011 "1"   0    # LINE  from  MEAD S   230.00 to MEAD N   230.00
0
#
#  Case Number 203
1  19022 19320 "2"   0    # LINE  from  DAVIS    230.00 to TOPOCK   230.00
2  19037 19011 "1"   0    # TRAN  from  MEAD     345.00 to MEAD N   230.00
0
#
#  Case Number 204
1  19320 19316 "1"   0    # LINE  from  TOPOCK   230.00 to SOPOINT  230.00
1  19320 19316 "2"   0    # LINE  from  TOPOCK   230.00 to SOPOINT  230.00
0
#
#  Case Number 205
1  19320 19316 "1"   0    # LINE  from  TOPOCK   230.00 to SOPOINT  230.00
1  19320 19019 "1"   0    # LINE  from  TOPOCK   230.00 to BLK MESA 230.00
0
#
#  Case Number 206
1  19320 19316 "1"   0    # LINE  from  TOPOCK   230.00 to SOPOINT  230.00
1  19320 19074 "1"   0    # LINE  from  TOPOCK   230.00 to N.HAVASU 230.00
0
#
#  Case Number 207
1  19320 19316 "1"   0    # LINE  from  TOPOCK   230.00 to SOPOINT  230.00
1  19052 14231 "1"   0    # LINE  from  LIBERTY  230.00 to WESTWING 230.00
0
#
#  Case Number 208
1  19320 19316 "1"   0    # LINE  from  TOPOCK   230.00 to SOPOINT  230.00
1  19012 19011 "1"   0    # LINE  from  MEAD S   230.00 to MEAD N   230.00
0
#
#  Case Number 209
1  19320 19316 "1"   0    # LINE  from  TOPOCK   230.00 to SOPOINT  230.00
1  19012 19011 "2"   0    # LINE  from  MEAD S   230.00 to MEAD N   230.00
0
#
```

```
#  Case Number 210
1  19320 19316 "1"   0   # LINE  from  TOPOCK   230.00 to SOPOINT  230.00
2  19037 19011 "1"   0   # TRAN  from  MEAD     345.00 to MEAD N   230.00
0
#
#  Case Number 211
1  19320 19316 "2"   0   # LINE  from  TOPOCK   230.00 to SOPOINT  230.00
1  19320 19019 "1"   0   # LINE  from  TOPOCK   230.00 to BLK MESA 230.00
0
#
#  Case Number 212
1  19320 19316 "2"   0   # LINE  from  TOPOCK   230.00 to SOPOINT  230.00
1  19320 19074 "1"   0   # LINE  from  TOPOCK   230.00 to N.HAVASU 230.00
0
#
#  Case Number 213
1  19320 19316 "2"   0   # LINE  from  TOPOCK   230.00 to SOPOINT  230.00
1  19052 14231 "1"   0   # LINE  from  LIBERTY  230.00 to WESTWING 230.00
0
#
#  Case Number 214
1  19320 19316 "2"   0   # LINE  from  TOPOCK   230.00 to SOPOINT  230.00
1  19012 19011 "1"   0   # LINE  from  MEAD S   230.00 to MEAD N   230.00
0
#
#  Case Number 215
1  19320 19316 "2"   0   # LINE  from  TOPOCK   230.00 to SOPOINT  230.00
1  19012 19011 "1"   0   # LINE  from  MEAD S   230.00 to MEAD N   230.00
0
#
#  Case Number 216
1  19320 19316 "2"   0   # LINE  from  TOPOCK   230.00 to SOPOINT  230.00
2  19037 19011 "1"   0   # TRAN  from  MEAD     345.00 to MEAD N   230.00
0
#
#  Case Number 217
1  19320 19019 "1"   0   # LINE  from  TOPOCK   230.00 to BLK MESA 230.00
1  19320 19074 "1"   0   # LINE  from  TOPOCK   230.00 to N.HAVASU 230.00
0
#
#  Case Number 218
1  19320 19019 "1"   0   # LINE  from  TOPOCK   230.00 to BLK MESA 230.00
1  19052 14231 "1"   0   # LINE  from  LIBERTY  230.00 to WESTWING 230.00
0
#
#  Case Number 219
1  19320 19019 "1"   0   # LINE  from  TOPOCK   230.00 to BLK MESA 230.00
1  19012 19011 "1"   0   # LINE  from  MEAD S   230.00 to MEAD N   230.00
0
#
#  Case Number 220
1  19320 19019 "1"   0   # LINE  from  TOPOCK   230.00 to BLK MESA 230.00
1  19012 19011 "2"   0   # LINE  from  MEAD S   230.00 to MEAD N   230.00
0
#
#  Case Number 221
1  19320 19019 "1"   0   # LINE  from  TOPOCK   230.00 to BLK MESA 230.00
2  19037 19011 "1"   0   # TRAN  from  MEAD     345.00 to MEAD N   230.00
0
#
#  Case Number 222
1  19320 19074 "1"   0   # LINE  from  TOPOCK   230.00 to N.HAVASU 230.00
1  19052 14231 "1"   0   # LINE  from  LIBERTY  230.00 to WESTWING 230.00
0
#
#  Case Number 223
1  19320 19074 "1"   0   # LINE  from  TOPOCK   230.00 to N.HAVASU 230.00
1  19012 19011 "1"   0   # LINE  from  MEAD S   230.00 to MEAD N   230.00
0
#
```

```
#  Case Number 224
1  19320 19074 "1"   0    # LINE  from  TOPOCK   230.00 to N.HAVASU 230.00
1  19012 19011 "2"   0    # LINE  from  MEAD S   230.00 to MEAD N   230.00
0
#
#  Case Number 225
1  19320 19074 "1"   0    # LINE  from  TOPOCK   230.00 to N.HAVASU 230.00
2  19037 19011 "1"   0    # TRAN  from  MEAD     345.00 to MEAD N   230.00
0
#
#  Case Number 226
1  19052 14231 "1"   0    # LINE  from  LIBERTY  230.00 to WESTWING 230.00
1  19012 19011 "1"   0    # LINE  from  MEAD S   230.00 to MEAD N   230.00
0
#
#  Case Number 227
1  19052 14231 "1"   0    # LINE  from  LIBERTY  230.00 to WESTWING 230.00
1  19012 19011 "2"   0    # LINE  from  MEAD S   230.00 to MEAD N   230.00
0
#
#  Case Number 228
1  19052 14231 "1"   0    # LINE  from  LIBERTY  230.00 to WESTWING 230.00
2  19037 19011 "1"   0    # TRAN  from  MEAD     345.00 to MEAD N   230.00
0
#
#  Case Number 229
1  19012 19011 "1"   0    # LINE  from  MEAD S   230.00 to MEAD N   230.00
1  19012 19011 "2"   0    # LINE  from  MEAD S   230.00 to MEAD N   230.00
0
#
#  Case Number 230
1  19012 19011 "1"   0    # LINE  from  MEAD S   230.00 to MEAD N   230.00
2  19037 19011 "1"   0    # TRAN  from  MEAD     345.00 to MEAD N   230.00
0
#
#  Case Number 231
1  19012 19011 "2"   0    # LINE  from  MEAD S   230.00 to MEAD N   230.00
2  19037 19011 "1"   0    # TRAN  from  MEAD     345.00 to MEAD N   230.00
0
-1
# EOF
```

Appendix D

Transient Stability Modeling

Northern Arizona Energy Project Dynamic Data

Model Name: genrou

Description Solid rotor generator represented by equal mutual inductance rotor modeling

Prerequisites: Generator present in load flow working case

Inputs: Network boundary variables, Field Voltage, Turbine Power

Invocation:

```
genrou [<n>] {<name> <kv>} <id> :
```

Parameters:

EPCL Variable	*Default Data*	*Description*
Tpdo	7.0	D-axis transient rotor time constant
Tppdo	0.030	D-axis sub-transient rotor time constant
Tpqo	0.75	Q-axis transient rotor time constant
Tppqo	0.05	Q-axis sub-transient rotor time constant
H	3.0	Inertia constant, sec
D	0.0	Damping factor, pu
Ld	2.1	D-axis synchronous reactance
Lq	2.0	Q-axis synchronous reactance
Lpd	0.2	D-axis transient reactance
Lpq	0.5	Q-axis transient reactance
Lppd	0.18	D-axis transient reactance
Ll	0.15	Stator leakage reactance, pu
S1	0.05	Saturation factor at 1 pu flux
S12	0.3	Saturation factor at 1.2 pu flux
Ra	0.0	Stator resistance, pu
Rcomp	0.0	Compounding resistance for voltage control, pu
Xcomp	0.0	Compounding reactance for voltage control, pu

Notes:

a) All rotor time constants must be non-zero.

b) All reactances must be specified. **Lppq** is taken to be equal to **Lppd**.

c) **D** has the dimensions ΔP(p.u.) / Δspeed (p.u.).

d) **S1** and **S12** are defined in Figure 3.10.2, and must be non- zero.

e) (**Ra**+j**Lppd**) overwrites the load flow machine subtransient impedance when the INIT, RDYD, or RDWS command is executed.

f) If **Rcomp** and **Xcomp** are absent from the data record read by RDYD, they are set to zero. If **Ra** is also absent, it is set to the resistance part of the machine subtransient impedance from the load flow data table.

Output Channels:

Record Level	*Name*	*Description*
1	spd	Shaft speed, p.u.
1	ang	Rotor angle, degrees
1	vt	Terminal voltage, p.u.
1	pg	Electrical power, MW
1	qg	Reactive power, MVAR
1	efd	Field voltage, p.u.

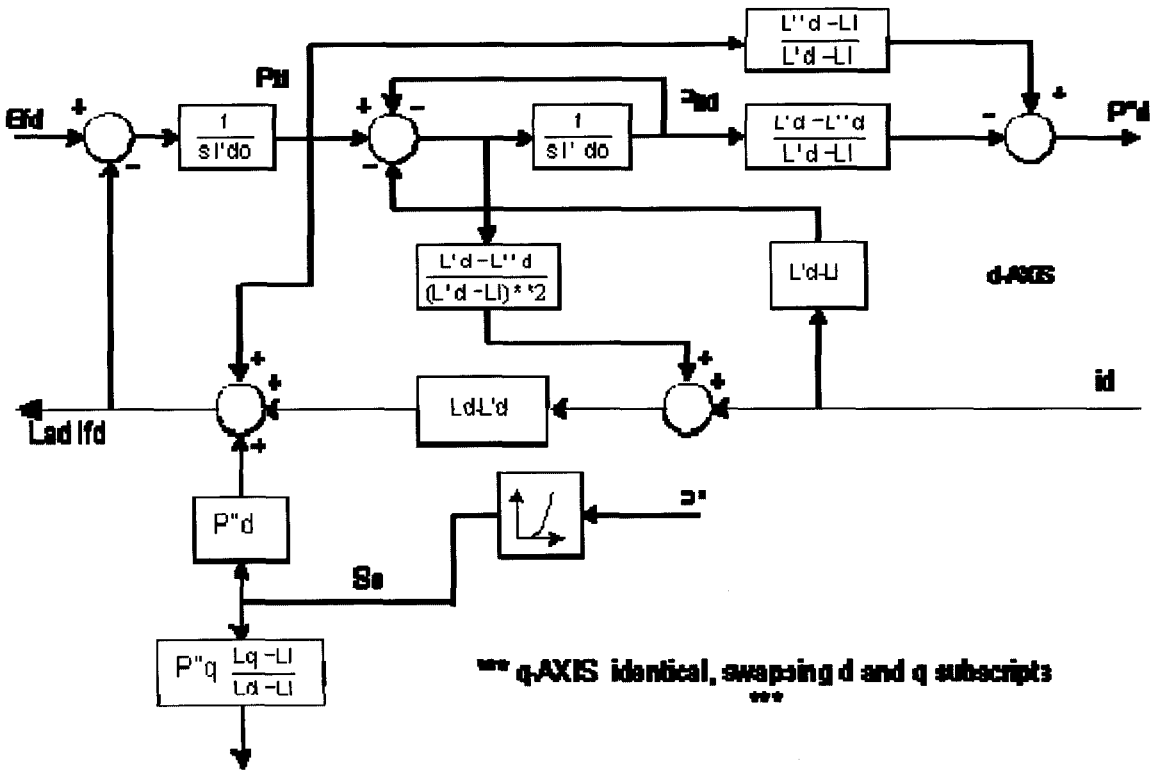

Model Name: exac8b

Description Brushless exciter with PID voltage regulator

Prerequisites: Generator model ahead of this model in dynamic models table

Inputs: Compounded generator terminal voltage, generator field current, generator speed

Invocation: `exac8b [<n>] {<name> <kv>} <id>:`

Parameters:

EPCL Variable	*Default Data*	*Description*
Tr	0.02	Voltage transducer time constant, sec.
Kvp	4.0	Voltage Regulator Proportional Gain
Kvi	4.0	Voltage Regulator Integral Gain
Kvd	20.0	Voltage Regulator Derivative Gain
Tvd	0.05	Voltage Regulator Derivative Time Constant, sec.
Vimax	0.1	Voltage Regulator Input Limit, p.u.
Ta	0.02	Voltage Regulator time constant, sec.
Vrmax	10.0	Maximum controller output, p.u.
Vrmin	-10.0	Minimum controller output, p.u.
Ke	1.0	Exciter field proportional constant
Te	0.2	Exciter field time constant, sec.
Kc	0.1	Rectifier regulation factor, p.u.
Kd	1.0	Exciter regulation factor, p.u.
E1	5.0	Exciter flux at knee of curve, p.u.
S(E1)	0.001	Saturation factor at knee
E2	7.0	Maximum exciter, p.u.
S(E2)	0.01	Saturation factor at max flux
Rcomp	0.0	Regulator compensating resistance, p.u.
Xcomp	0,0	Regulator compensating reactance, p.u.

Notes:

a) This model represents a brushless exciter with its excitation provided by a self contained voltage regulator. This model includes all features of the IEEE type AC8B excitation system model, plus augmentations to improve its accuracy and generality.

b) This model can be used to represent the model "SEL" digital excitation system of Basler Electric.

c) The exciter model includes representation of magnetic saturation, rectifier regulation, and armature reaction in the alternator exciter. Saturation is normally a very small effect in such machines and correspondingly, Se1, Se2 can normally be given small values. The rectifier regulation and armature reaction parameters, Kc, Kd, may be set to zero to ignore these effects.

d) Note that some manufacturers specify "loaded" magnetization curves for brushless exciters. In this case, their data may have Kc and Kd equal to zero and Se1, Se2 with quite large values. The use of a loaded magnetization curve is less accurate than full modeling by specifying Kc, Kd, but is widespread, nevertheless.

Output Channels:

Record Level	*Name*	*Description*
1	ifd	Generator field current, p.u.
1	vr	Voltage regulator output p.u.
1	vfe	Exciter field voltage p.u.
1	ife	Exciter field current p.u.

Block Diagram:

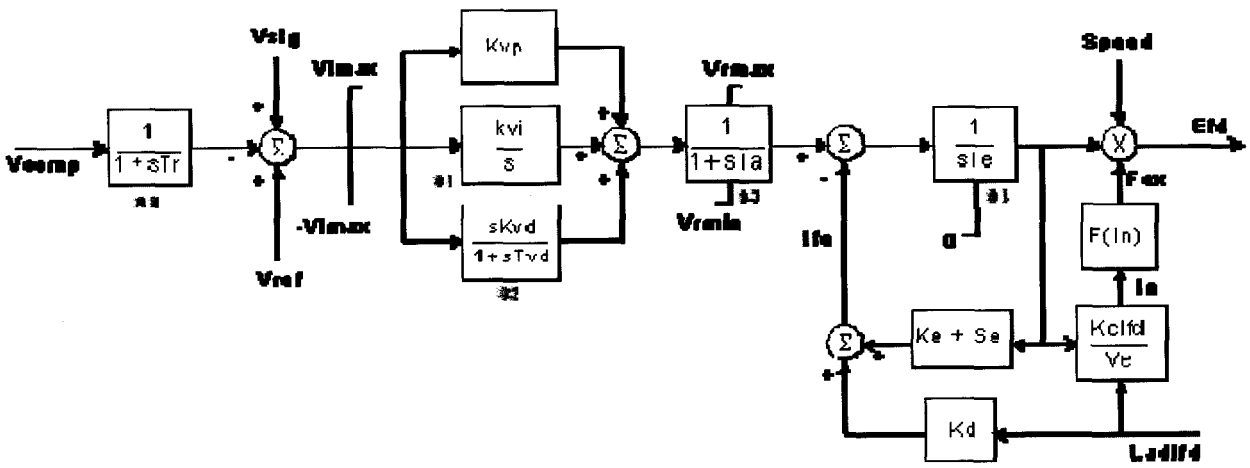

Model Name: ggov1

Description General governor model

Prerequisites: Generator model ahead of this model in the dynamic models table

Inputs: Shaft speed

Invocation:

```
ggov1 [<n>] {<name> <kv>} <id> : [mwcap=<value>]
```

Parameters:

EPCL Variable	*Default Data*	*Description*
r	0.04	Permanent droop, p.u.
rselect	1.0	Feedback signal for droop = 1 selected electrical power = 0 none (isochronous governor) = -1 fuel valve stroke (true stroke) = -2 governor output (requested stroke)
Tpelec	1.0	Electrical power transducer time constant, sec.
maxerr	0.05	Maximum value for speed error signal
minerr	-0.05	Minimum value for speed error signal
Kpgov	10.0	Governor proportional gain
Kigov	2.0	Governor integral gain
Kdgov	0.0	Governor derivative gain
Tdgov	1.0	Governor derivative controller time constant
vmax	1.0	Maximum valve position limit
vmin	0.15	Minimum valve position limit
Tact	0.5	Actuator time constant
Kturb	1.5	Turbine gain
wfnl	0.2	No load fuel flow, p.u
Tb	0.5	Turbine lag time constant
Tc	0.0	Turbine lead time constant
Flag	1.0	Switch for fuel source characteristic = 0 for fuel flow independent of speed = 1 fuel flow proportional to speed
Teng	0.0	Transport lag time constant for diesel engine
Tfload	3.0	Load Limiter time constant
Kpload	2.0	Load limiter proportional gain for PI controller
Kiload	0.67	Load limiter integral gain for PI controller

Ldref	1.0	Load limiter reference value p.u.
Dm	0.0	Speed sensitivity coefficient, p.u.
ropen	.10	Maximum valve opening rate, p.u./sec.
rclose	-0.1	Minimum valve closing rate, p.u./sec.
Kimw	0.002	Power controller (reset) gain
Pmwset	80.0	Power controller setpoint, MW
aset	0.01	Acceleration limiter setpoint, p.u./sec.
Ka	10.0	Acceleration limiter Gain
Ta	0.1	Acceleration limiter time constant, sec.
db	0.0	Speed governor dead band
Tsa	4.0	Temperature detection lead time constant, sec.
Tsb	5.0	Temperature detection lag time constant, sec.
rup	99.0	Maximum rate of load limit increase
rdown	-99.0	Maximum rate of load limit decrease

Notes:

a) This model can be used to represent a variety of prime movers controlled by PID governors. It is suitable, for example, for representation of
- gas turbine and single shaft combined cycle turbines
- diesel engines with modern electronic or digital governors
- steam turbines where steam is supplied from a large boiler drum or a large header whose pressure is substantially constant over the period under study
- simple hydro turbines in dam configurations where the water column length is short and water inertia effects are minimal

b) Per unit parameters are on base of turbine MW capability. If no value is entered for "**mwcap**", the generator MVA base is used.

c) The range of fuel valve travel and of fuel flow is unity. Thus the largest possible value of **vmax** is 1.0 and the smallest possible value of **vmin** is zero. **Vmax** may, however, be reduced below unity to represent a loading limit that may be imposed by the operator or a supervisory control system. For gas turbines **vmin** should normally be greater than zero and less than **wfnl** to represent a minimum firing limit.

The value of the fuel flow at maximum output must be less than, or equal to unity, depending on the value of **Kturb**. If the initial power requires a fuel flow greater than 1.0, a warning message is written and **Kturb** is increased to permit initialization with valve position = 1.0.

d) The parameter **Teng** is provided for use in representing diesel engines where there is a small but measurable transport delay between a change in fuel flow setting and the development of torque. **Teng** should be zero in all but special cases where this transport delay is of particular concern.

e) The parameter **Flag** is provided to recognize that fuel flow, for a given fuel valve stroke, can be proportional to engine speed. This is the case for GE gas turbines and for diesel engines with positive displacement fuel injectors. **Flag** should be set to unity for all GE gas turbines and most diesel engines. **Flag** should be set to zero where it is known that the fuel control system keeps fuel flow independent of the engine speed.

f) The load limiter module may be used to impose a maximum output limit such as an exhaust temperature limit. To do this the time constant **Tfload** should be set to represent the time constant in the measurement of temperature (or other signal), and the gains of the limiter, **Kpload, Kiload**, should be set to give prompt stable control when on limit. The load limit can be deactivated by setting the parameter **Ldref** to a high value.

g) The parameter **Dm** can represent either the variation of the engine power with the shaft speed or the variation of maximum power capability with shaft speed.

If **Dm** is positive it describes the falling slope of the engine speed verses power characteristic as speed increases. A slightly falling characteristic is typical for reciprocating engines and some aero-derivative turbines.

If **Dm** is negative the engine power is assumed to be unaffected by the shaft speed, but the maximum permissible fuel flow is taken to fall with falling shaft speed. This is characteristic of single-shaft industrial turbines due to exhaust temperature limits.

h) This model includes a simple representation of a supervisory load controller. This controller is active if the parameter **Kimw** is non-zero. The load controller is a slow acting reset loop that adjusts the speed/load reference of the turbine governor to hold the electrical power output of the unit at its initial condition value. This value is stored in the parameter **Pmwset** when the model is initialized, and can be changed thereafter. The load controller must be adjusted to respond gently relative to the speed governor. A typical value for **Kimw** is 0.01, corresponding to a reset time of 100 seconds.

i) The load reference of the supervisory load control loop is accessible as the parameter, **Pmwset**. **Pmwset** is given a value automatically when the model is initialized. This value overwrites any value entered prior to initialization. This parameter should not be manipulated by the manual operation or an EPCL program prior to the execution of the "INIT' command.

j) The parameters **aset, Ka**, and **Ta** describe an acceleration limiter. Ta must be non-zero, but the acceleration limiter can be disabled by setting **aset** to a large value, such as 1.

l) The parameter, **db**, is the speed governor dead band. This parameter is stated in terms of per unit speed. In the majority of applications of **ggov1** it is recommended that this value be set to zero.

m) The parameters, **Tsa, Tsb**, are provided to augment the exhaust gas temperature measurement subsystem in gas turbines. For example, they may be set to values such as 4.,

5., to represent the 'radiation shield' element of large gas turbines. If both parameters are left off the end of the parameter list, they default to 1.0.

n) The parameters, **rup, rdown,** specify the maximum rate of increase and decrease of the output of the load limit controller **(Kpload/Kiload)**. These parameters should normally be set, or defaulted to 99/-99, but may be given particular values to represent the temperature limit controls of some GE heavy-duty engine controls. If both parameters are left off the end of the parameter list, they default to 99 and –99.

o) The fuel flow command (**fsr**) is determined by whichever is lowest of **fsrt**, **fsra**, and **fsrn**. Although not explicitly shown in the block diagram, the signals that are not in control track **fsr** so that they do not "windup" beyond that value. This represents GE gas turbine control practice but may not be true for other controller designs.

Output Channels:

Record Level	*Name*	*Description*
1	pm	Turbine power, MW
1	fsr	Fuel valve command, p.u.
1	fsrt	Temperature limit fuel valve command, p.u.

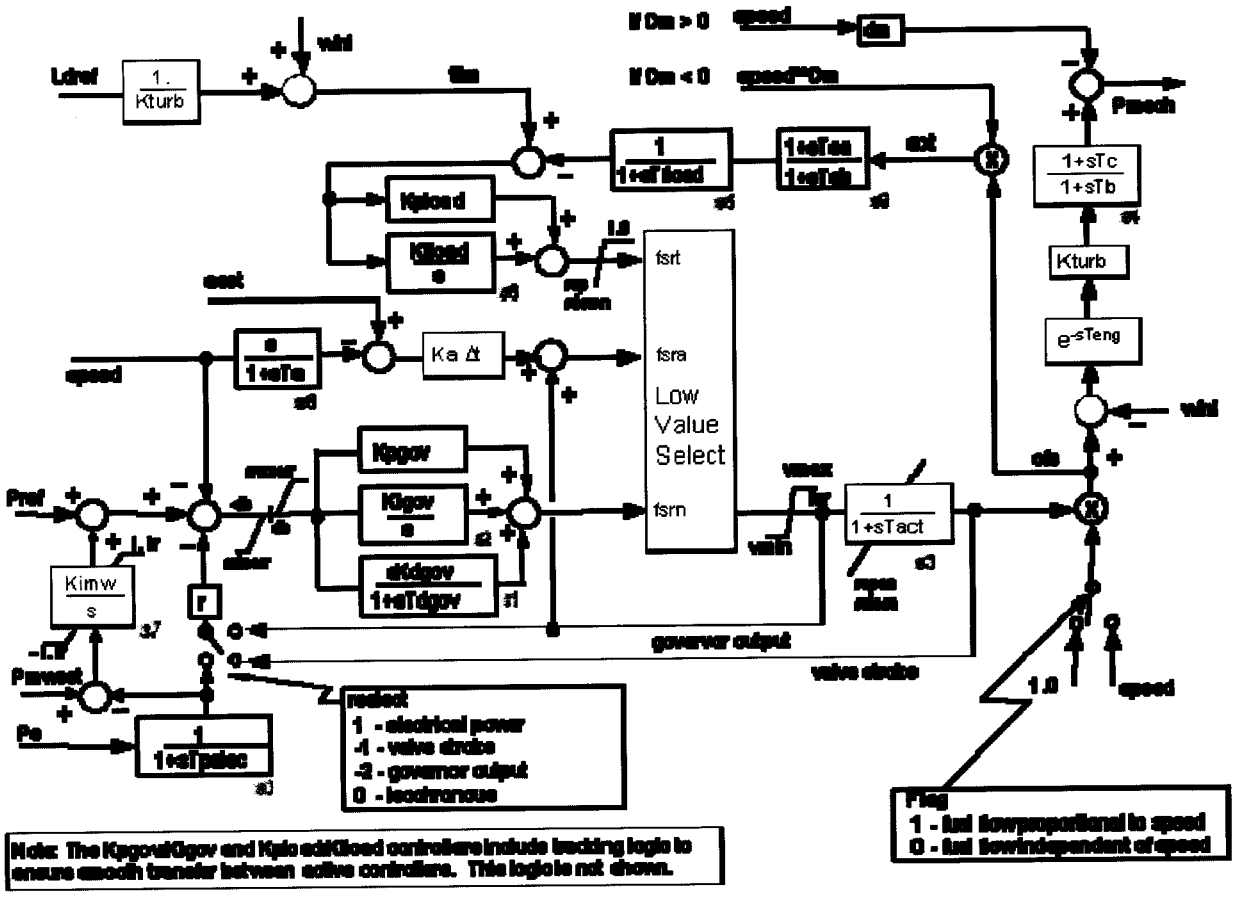
Ldref
1.
Kturb
vhl
fm
If Dm > 0
speed
dm
If Dm < 0
speed*Dm
Pmech
1
1+sTfload
1+sTen
1+sTch
ext
1+sTc
1+sTb
Kpload
Kiload
s
fsrt
fsra
Low
Value
Select
fsrn
Kturb
e-sTeng
vhl
ext
speed
1
1+sTa
Ka Δt
Pref
Kpgov
Kigov
s
dkdgov
1+sTdgov
vmax
vmin
1
1+sTact
Kimw
s
r
-Pmwset
Pe
1
1+sTpelec
governor output
valve stroke
1.0
speed
select
1 - electrical power
-1 - valve stroke
-2 - governor output
0 - isochronous
Flag
1 - fuel flowproportional to speed
0 - fuel flowindependent of speed
Note: The Kpgov/Kigov and Kpload/Kiload controllers include backing logic to ensure smooth transfer between active controllers. This logic is not shown.

Model Name: ieeest

Description Power system stabilizer

Prerequisites: Generator model ahead of this model in dynamic models table

Inputs:

Generator shaft speed

Frequency of generator terminal or system bus voltage

Generator electric power or accelerating power

Voltage amplitude of generator terminal bus or system bus

Current amplitude in generator step-up transformer branch

Invocation:

```
ieeest [<n>] {<name> <kv>} <id> :
```

Parameters:

EPCL Variable	*Default Data*	*Description*
j	0.0	Input signal code
k	0.0	Remote signal bus number
A1	0.0	Notch filter parameters
A2	0.0	Notch filter parameters
A3	0.0	Notch filter parameters
A4	0.0	Notch filter parameters
A5	0.0	Notch filter parameters
A6	0.0	Notch filter parameters
T1	0.0	Lead/lag time constant, sec.
T2	0.0	Lead/lag time constant, sec.
T3	0.0	Lead/lag time constant, sec.
T4	0.0	Lead/lag time constant, sec.
T5	0.0	Washout numerator time constant, sec.
T6	0.0	Washout denominator time constant, sec.
Ks	0.0	Stabilizer gain
Lsmax	0.0	Maximum stabilizer output, p.u.
Lsmin	0.0	Minimum stabilizer output, p.u.
Vcu	0.0	Stabilizer input cutoff threshold, p.u.
Vcl	0.0	Stabilizer input cutoff threshold, p.u.
Tdelay	0.0	Time delay, sec.

Notes:

a) T2, T4, T5, T6 must be greater than zero.

b) T1, T3 and Tdelay may be zero.

c) Set T1 = T2 and/or T3 = T4 to obtain null effect from a lead/lag block.

d) Ks may be positive or negative depending on the input signal that is active. Ks should normally be:

positive	for shaft speed or frequency input
negative	for electrical power input

e) The input signal code, j, and the remote bus number, k, specify the input signal used by the stabilizer. If k is zero the signal is taken from the shaft or terminals of the generator on which the stabilizer is located. If k is non-zero the signal is taken from bus number k (for j = 1, 2, 3, 4, or 5). The input signal code, j, is:

1	for shaft speed deviation
2	for frequency deviation of bus voltage
3	for generator electrical power
4	for generator accelerating power
5	for amplitude of bus voltage
6	not used
7	for amplitude of branch current

f) A1 through A6 may be zero. Set all A values to zero to ignore filter.

g) Tdelay should not exceed ten time steps.

Output Channels:

Record Level	*Name*	*Description*
1	vs	Stabilizer output signal, p.u.

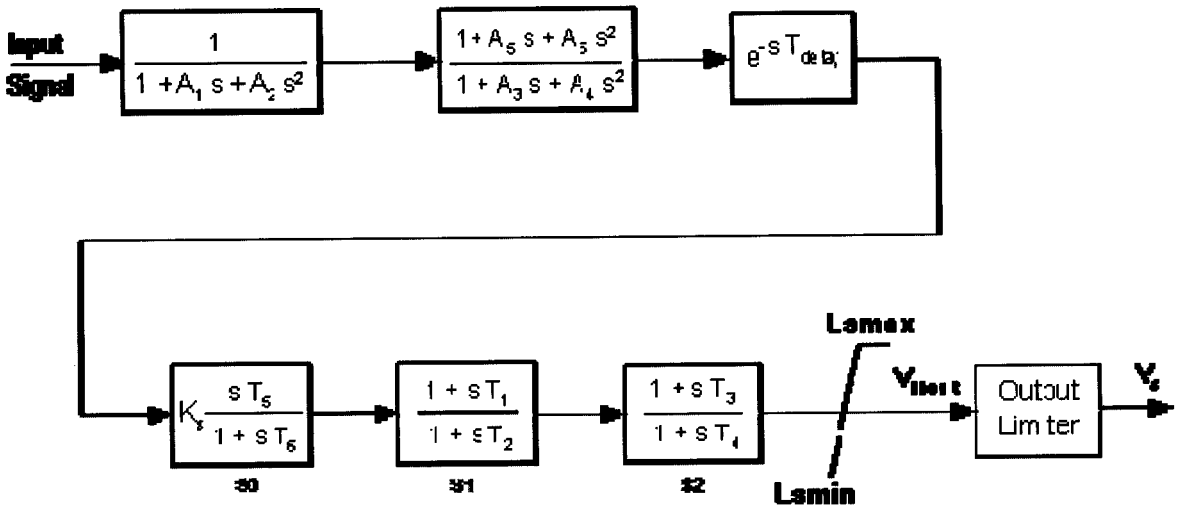


```
Output    Limiter

if ( Vcu && ( Vct > Vcu ) )
        Vs = 0.0
if ( Vcl && ( Vct < Vcl ) )
        Vs = 0.0
else
        Vs = Vlout


Vct = Compensating
        voltage
        ( genbc[k].vcomp )
```

Northern Arizona Energy Project data with machine parameters in GE format are identified below.

```
# Northern Arizona Energy Project, LM6000 Units, JLE, 3-20-2007
genrou  19610 "ARROYEP1"  13.80 "1 " : #9 mva=71.1760  9.6700 0.0500 2.9500 0.0500 1.1700 0.0000 2.3500 2.1500 0.2450 0.3500 0.1810  0.1300 0.1120 0.4610 0.0017
0.0000 0.0000 0.0000
exac8b  19610 "ARROYEP1"  13.80 "1 " : #9 0.010000  58.0000  7.0000  28.0000 0.070000 0.100000 0.016666  47.0000 0.0 1.000000  1.8000 0.060000  1.7800  7.1000
0.410000  9.4000  4.0100 0.0 0.050000
ggov1  19610 "ARROYEP1"  13.80 "1 " : #9 mwcap=60.5000 0.050000 1.000000 0.400000  10.0000 -10.0000  2.5000  1.2000 0.0 0.016666 1.000000  0.0 0.200000  2.4000
0.270000  2.0000 1.000000 1.000000 0.0 0.500000  4.0000  2.0000 1.000000 0.0 1.000000 -1.000000 0.010000  50.0000 0.010000  10.0000 1.000000  0.0 1.000000 1.000000
99.0000 -99.0000
ieeest  19610 "ARROYEP1"  13.80 "1 " : #9  3.0000 0.0 0.0 0.0 0.0 0.0 0.0 0.0 0.263000 0.016666  0.263000 0.196000  5.0000  5.0000 -0.250000 0.025000 -0.025000  2.0000
0.0 0.0

genrou  19612 "ARROYEP2"  13.80 "1 " : #9 mva=71.1760  9.6700 0.0500 2.9500 0.0500 1.1700 0.0000 2.3500 2.1500 0.2450 0.3500 0.1810  0.1300 0.1120 0.4610 0.0017
0.0000 0.0000 0.0000
exac8b  19612 "ARROYEP2"  13.80 "1 " : #9 0.010000  58.0000  7.0000  28.0000 0.070000 0.100000 0.016666  47.0000 0.0 1.000000  1.8000 0.060000  1.7800  7.1000
0.410000  9.4000  4.0100 0.0 0.050000
ggov1  19612 "ARROYEP2"  13.80 "1 " : #9 mwcap=60.5000 0.050000 1.000000 0.400000  10.0000 -10.0000  2.5000  1.2000 0.0 0.016666 1.000000  0.0 0.200000  2.4000
0.270000  2.0000 1.000000 1.000000 0.0 0.500000  4.0000  2.0000 1.000000 0.0 1.000000 -1.000000 0.010000  50.0000 0.010000  10.0000 1.000000  0.0 1.000000 1.000000
99.0000 -99.0000
ieeest  19612 "ARROYEP2"  13.80 "1 " : #9  3.0000 0.0 0.0 0.0 0.0 0.0 0.0 0.0 0.263000 0.016666 0.263000 0.196000  5.0000  5.0000 -0.250000 0.025000 -0.025000  2.0000
0.0 0.0

genrou  19614 "ARROYEP3"  13.80 "1 " : #9 mva=71.1760  9.6700 0.0500 2.9500 0.0500  1.1700 0.0000 2.3500 2.1500 0.2450 0.3500 0.1810  0.1300 0.1120 0.4610 0.0017
0.0000 0.0000 0.0000
exac8b  19614 "ARROYEP3"  13.80 "1 " : #9 0.010000  58.0000  7.0000  28.0000 0.070000 0.100000 0.016666  47.0000 0.0 1.000000  1.8000 0.060000  1.7800  7.1000
0.410000  9.4000  4.0100 0.0 0.050000
ggov1  19614 "ARROYEP3"  13.80 "1 " : #9 mwcap=60.5000 0.050000 1.000000 0.400000  10.0000 -10.0000  2.5000  1.2000 0.0 0.016666 1.000000  0.0 0.200000  2.4000
0.270000  2.0000 1.000000 1.000000 0.0 0.500000  4.0000  2.0000 1.000000 0.0 1.000000 -1.000000 0.010000  50.0000 0.010000  10.0000 1.000000  0.0 1.000000 1.000000
99.0000 -99.0000
ieeest  19614 "ARROYEP3"  13.80 "1 " : #9  3.0000 0.0 0.0 0.0 0.0 0.0 0.0 0.0 0.263000 0.016666 0.263000 0.196000  5.0000  5.0000 -0.250000 0.025000 -0.025000  2.0000
0.0 0.0

genrou  19616 "ARROYEP4"  13.80 "1 " : #9 mva=71.1760  9.6700 0.0500 2.9500 0.0500 1.1700 0.0000 2.3500 2.1500 0.2450 0.3500 0.1810  0.1300 0.1120 0.4610 0.0017
0.0000 0.0000 0.0000
exac8b  19616 "ARROYEP4"  13.80 "1 " : #9 0.010000  58.0000  7.0000  28.0000 0.070000 0.100000 0.016666  47.0000 0.0 1.000000  1.8000 0.060000  1.7800  7.1000
0.410000  9.4000  4.0100 0.0 0.050000
ggov1  19616 "ARROYEP4"  13.80 "1 " : #9 mwcap=60.5000 0.050000 1.000000 0.400000  10.0000 -10.0000  2.5000  1.2000 0.0 0.016666 1.000000  0.0 0.200000  2.4000
0.270000  2.0000 1.000000 1.000000 0.0 0.500000  4.0000  2.0000 1.000000 0.0 1.000000 -1.000000 0.010000  50.0000 0.010000  10.0000 1.000000  0.0 1.000000 1.000000
99.0000 -99.0000
ieeest  19616 "ARROYEP4"  13.80 "1 " : #9  3.0000 0.0 0.0 0.0 0.0 0.0 0.0 0.0 0.263000 0.016666 0.263000 0.196000  5.0000  5.0000 -0.250000 0.025000 -0.025000  2.0000
0.0 0.0
```

Appendix E

Transient Stability Plots

2008 HEAVY AUTUMN – LIBERTY PHASE-SHIFT TRANSFORMER IN-SERVICE.

Pre-Project Base Cases – Minimum WAPA-DSW Generation

Plot 1. Three-phase fault on the McConnico 230kV bus followed by loss of the Davis-McConnico 230 kV line.

Plot 2. The Griffith – Peacock 230 kV line out-of-service and the system re-adjusted followed by a three-phase fault on the McConnico 230kV bus followed by loss of the Davis-McConnico 230 kV line.

Plot 3. The Peacock 345/230 kV transformer out-of-service and the system re-adjusted followed by a three-phase fault on the McConnico 230kV bus followed by loss of the Davis-McConnico 230 kV line.

Plot 3a. The Peacock 345/230 kV transformer out-of-service and the system re-adjusted followed by a three-phase fault on the McConnico 230kV bus followed by loss of the Davis-McConnico 230 kV line – ***Griffith Generation output is reduced to 520 MW***.

Pre-Project Base Cases – Maximum WAPA-DSW Generation

Plot 4. Three-phase fault on the McConnico 230kV bus followed by loss of the Davis-McConnico 230 kV line.

Plot 5. The Griffith – Peacock 230 kV line out-of-service and the system re-adjusted followed by a three-phase fault on the McConnico 230kV bus followed by loss of the Davis-McConnico 230 kV line.

Plot 6. The Peacock 345/230 kV transformer out-of-service and the system re-adjusted followed by a three-phase fault on the McConnico 230kV bus followed by loss of the Davis-McConnico 230 kV line.

Post-Project Base Cases – Minimum WAPA-DSW Generation

Plot 7. The Griffith – Peacock 230 kV line out-of-service and the system re-adjusted followed by a three-phase fault on the McConnico 230kV bus followed by loss of the Davis-McConnico 230 kV line – ***Area Interchange***.

Plot 8. The Griffith – Peacock 230 kV line out-of-service and the system re-adjusted followed by a three-phase fault on the McConnico 230kV bus followed by loss of the Davis-McConnico 230 kV line – ***Area Interchange – Generation Reduced based on Flow Limit***.

Plot 9. The Griffith – Peacock 230 kV line out-of-service and the system re-adjusted followed by a three-phase fault on the McConnico 230kV bus followed by loss of the Davis-McConnico 230 kV line – ***Serving Regional Load***.

Plot 10. The Griffith – Peacock 230 kV line out-of-service and the system re-adjusted followed by a three-phase fault on the McConnico 230kV bus followed by loss of the Davis-McConnico 230 kV line – ***Serving Regional Load – Generation Reduced based on Flow Limit***.

Post-Project Base Cases – Maximum WAPA-DSW Generation

Plot 11. The Griffith – Peacock 230 kV line out-of-service and the system re-adjusted followed by a three-phase fault on the McConnico 230kV bus followed by loss of the Davis-McConnico 230 kV line – ***Area Interchange***.

Plot 12. The Griffith – Peacock 230 kV line out-of-service and the system re-adjusted followed by a three-phase fault on the McConnico 230kV bus followed by loss of the Davis-McConnico 230 kV line – ***Area Interchange – Generation Reduced based on Flow Limit***.

Plot 13. The Griffith – Peacock 230 kV line out-of-service and the system re-adjusted followed by a three-phase fault on the McConnico 230kV bus followed by loss of the Davis-McConnico 230 kV line – ***Serving Regional Load***.

Plot 14. The Griffith – Peacock 230 kV line out-of-service and the system re-adjusted followed by a three-phase fault on the McConnico 230kV bus followed by loss of the Davis-McConnico 230 kV line – ***Serving Regional Load – Generation Reduced based on Flow Limit***.

2008 HEAVY AUTUMN – LIBERTY PHASE-SHIFT TRANSFORMER BY-PASSED

Pre-Project Base Cases – Minimum WAPA-DSW Generation

Plot 15. Three-phase fault on the McConnico 230kV bus followed by loss of the Davis-McConnico 230 kV line.

Plot 16. The Griffith – Peacock 230 kV line out-of-service and the system re-adjusted followed by a three-phase fault on the McConnico 230kV bus followed by loss of the Davis-McConnico 230 kV line.

Plot 17. The Peacock 345/230 kV transformer out-of-service and the system re-adjusted followed by a three-phase fault on the McConnico 230kV bus followed by loss of the Davis-McConnico 230 kV line.

Pre-Project Base Cases – Maximum WAPA-DSW Generation

Plot 18. Three-phase fault on the McConnico 230kV bus followed by loss of the Davis-McConnico 230 kV line.

Plot 19. The Griffith – Peacock 230 kV line out-of-service and the system re-adjusted followed by a three-phase fault on the McConnico 230kV bus followed by loss of the Davis-McConnico 230 kV line.

Plot 20. The Peacock 345/230 kV transformer out-of-service and the system re-adjusted followed by a three-phase fault on the McConnico 230kV bus followed by loss of the Davis-McConnico 230 kV line.

Post-Project Base Cases – Minimum WAPA-DSW Generation

Plot 21. The Griffith – Peacock 230 kV line out-of-service and the system re-adjusted followed by a three-phase fault on the McConnico 230kV bus followed by loss of the Davis-McConnico 230 kV line – ***Area Interchange***.

Plot 22. The Griffith – Peacock 230 kV line out-of-service and the system re-adjusted followed by a three-phase fault on the McConnico 230kV bus followed by loss of the Davis-McConnico 230 kV line – ***Area Interchange – Generation Reduced based on Flow Limit***.

Plot 23. The Griffith – Peacock 230 kV line out-of-service and the system re-adjusted followed by a three-phase fault on the McConnico 230kV bus followed by loss of the Davis-McConnico 230 kV line – ***Serving Regional Load***.

Plot 24. The Griffith – Peacock 230 kV line out-of-service and the system re-adjusted followed by a three-phase fault on the McConnico 230kV bus followed by loss of the Davis-McConnico 230 kV line – ***Serving Regional Load – Generation Reduced based on Flow Limit***.

Post-Project Base Cases – Maximum WAPA-DSW Generation

Plot 25. The Griffith – Peacock 230 kV line out-of-service and the system re-adjusted followed by a three-phase fault on the McConnico 230kV bus followed by loss of the Davis-McConnico 230 kV line – ***Area Interchange***.

Plot 26. The Griffith – Peacock 230 kV line out-of-service and the system re-adjusted followed by a three-phase fault on the McConnico 230kV bus followed by loss of the Davis-McConnico 230 kV line – ***Area Interchange – Generation Reduced based on Flow Limit***.

Plot 27. The Griffith – Peacock 230 kV line out-of-service and the system re-adjusted followed by a three-phase fault on the McConnico 230kV bus followed by loss of the Davis-McConnico 230 kV line – ***Serving Regional Load***.

Plot 28. The Griffith – Peacock 230 kV line out-of-service and the system re-adjusted followed by a three-phase fault on the McConnico 230kV bus followed by loss of the Davis-McConnico 230 kV line – ***Serving Regional Load – Generation Reduced based on Flow Limit.***

Note: Initially the project was called Arroyo Energy Project; however, the name was changed to Northern Arizona Energy Project or NAEP after studies were completed. Any references to the Arroyo Energy Project should be denoted as the Northern Arizona Energy Project.

NORTHERN ARIZONA ENERGY PROJECT - TRANSIENT STABILITY PLOTS - PAGE 1

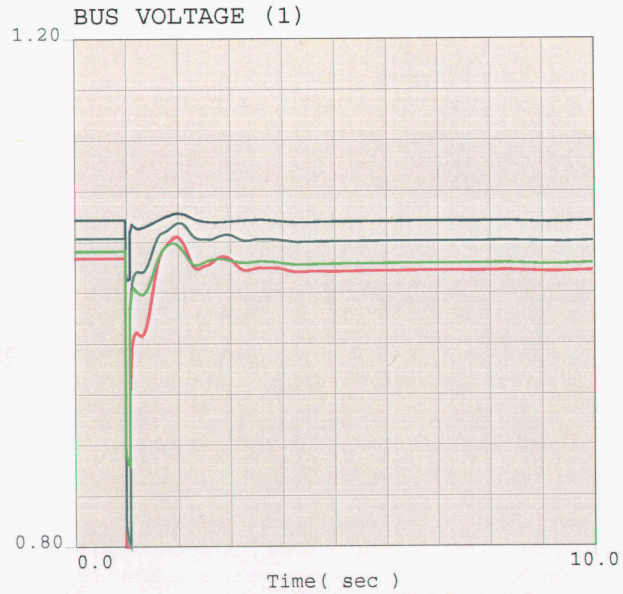

0.8	vbus	19038	MEAD	500.0	1	1	1.2
0.8	vbus	19315	PEACOCK	345.0	1	1	1.2
0.8	vbus	19053	LIBERTY	345.0	1	1	1.2
0.8	vbus	19037	MEAD	345.0	1	1	1.2

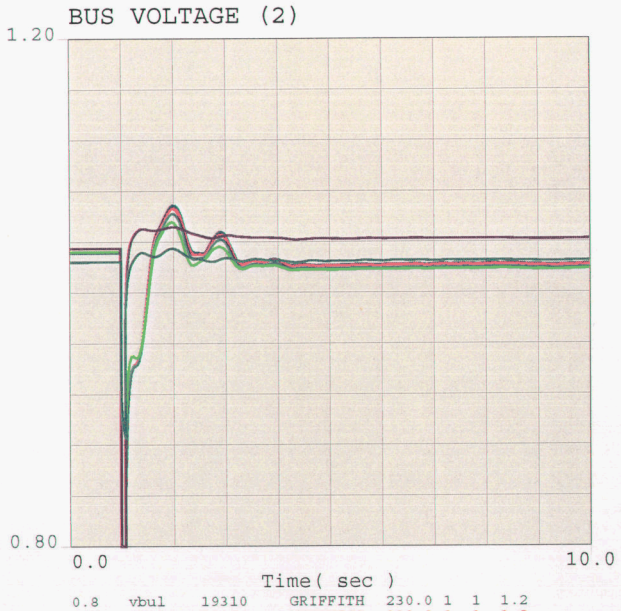

0.8	vbul	19310	GRIFFITH	230.0	1	1	1.2
0.8	vbul	19056	MCCONICO	230.0	1	1	1.2
0.8	vbul	19072	HILLTOP	230.0	1	1	1.2
0.8	vbus	19314	PEACOCK	230.0	1	1	1.2
0.8	vbul	19022	DAVIS	230.0	1	1	1.2
0.8	vbus	19042	PARKER	230.0	1	1	1.2

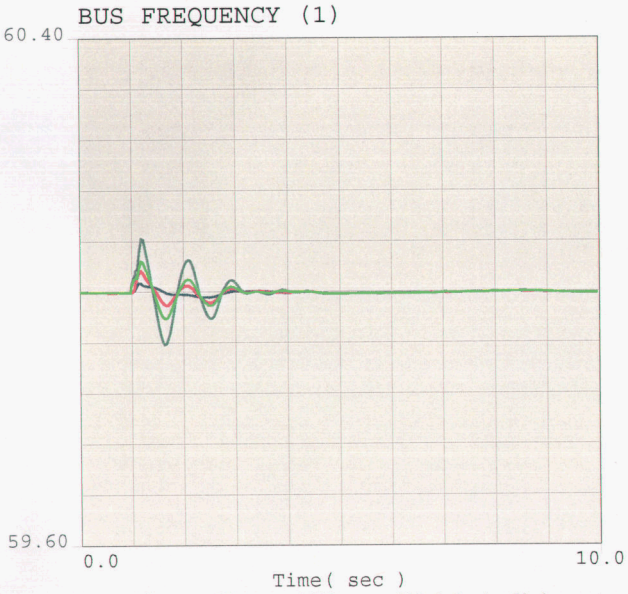

59.6	fbus	19038	MEAD	500.0	1	1	60.4
59.6	fbus	19037	MEAD	345.0	1	1	60.4
59.6	fbus	19315	PEACOCK	345.0	1	1	60.4
59.6	fbus	19053	LIBERTY	345.0	1	1	60.4

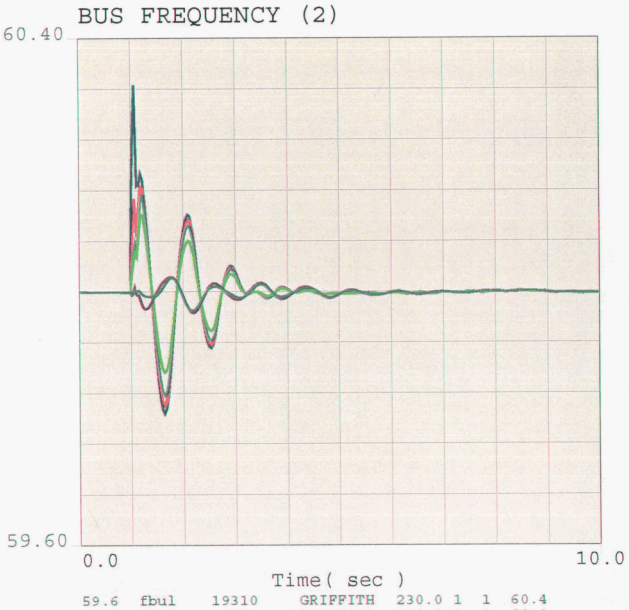

59.6	fbul	19310	GRIFFITH	230.0	1	1	60.4
59.6	fbul	19056	MCCONICO	230.0	1	1	60.4
59.6	fbul	19072	HILLTOP	230.0	1	1	60.4
59.6	fbus	19314	PEACOCK	230.0	1	1	60.4
59.6	fbul	19022	DAVIS	230.0	1	1	60.4
59.6	fbus	19042	PARKER	230.0	1	1	60.4

2008 HEAVY AUTUMN, NORTHERN ARIZONA ENERGY PROJECT, PRE-PROJECT
CASE: 08ha_pre-rev1.sav
EOR=9300MW, Min WAPA-DSW Generation Modeled.
Mohave Off-Line.

08ha_pre-rev1_McConnico-Davis-230-slo.chf

c:\upslf16\mypslf

Thu Jul 19 16:47:16 2007

NORTHERN ARIZONA ENERGY PROJECT - TRANSIENT STABILITY PLOTS - PAGE 1

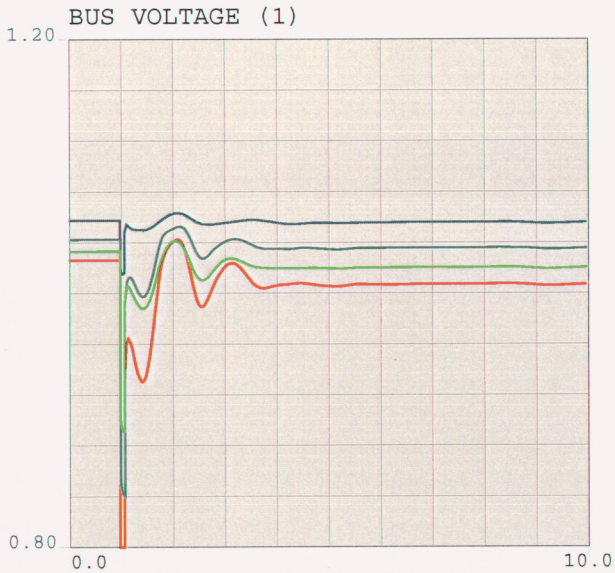

0.8	vbus	19038	MEAD	500.0	1	1	1.2
0.8	vbus	19315	PEACOCK	345.0	1	1	1.2
0.8	vbus	19053	LIBERTY	345.0	1	1	1.2
0.8	vbus	19037	MEAD	345.0	1	1	1.2

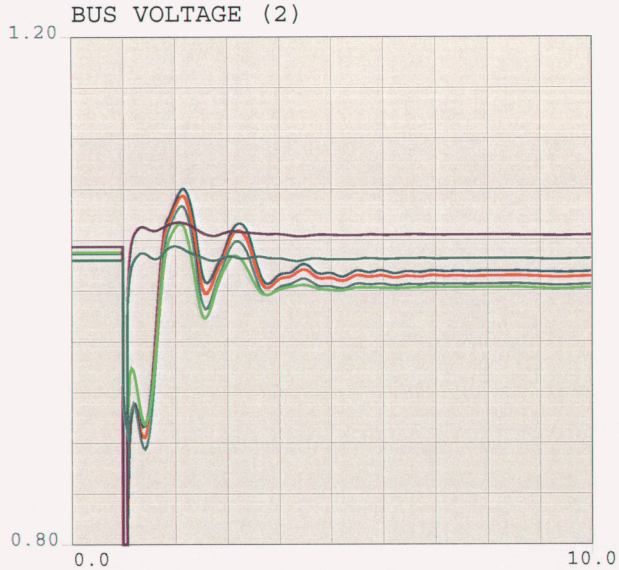

0.8	vbul	19310	GRIFFITH	230.0	1	1	1.2
0.8	vbul	19056	MCCONICO	230.0	1	1	1.2
0.8	vbul	19072	HILLTOP	230.0	1	1	1.2
0.8	vbus	19314	PEACOCK	230.0	1	1	1.2
0.8	vbul	19022	DAVIS	230.0	1	1	1.2
0.8	vbus	19042	PARKER	230.0	1	1	1.2

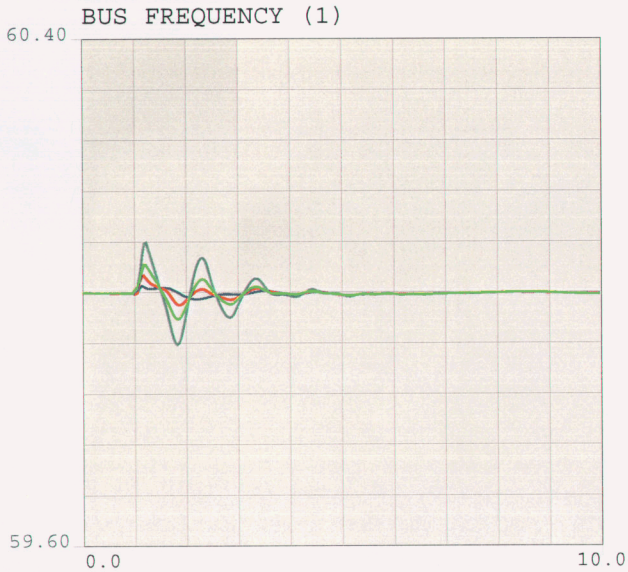

59.6	fbus	19038	MEAD	500.0	1	1	60.4
59.6	fbus	19037	MEAD	345.0	1	1	60.4
59.6	fbus	19315	PEACOCK	345.0	1	1	60.4
59.6	fbus	19053	LIBERTY	345.0	1	1	60.4

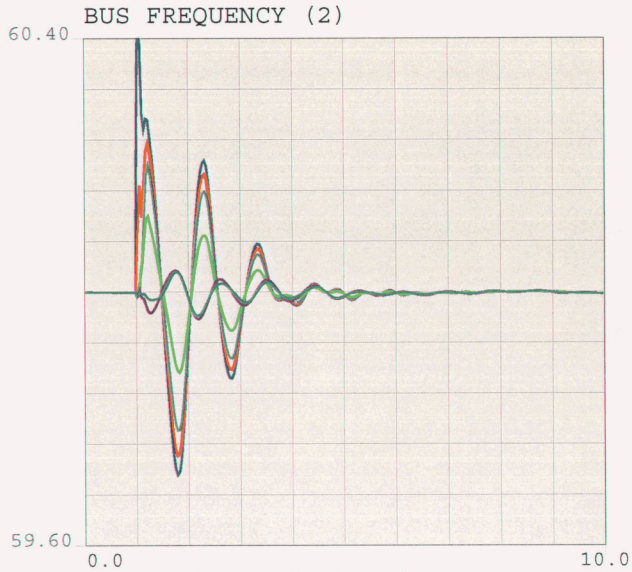

59.6	fbul	19310	GRIFFITH	230.0	1	1	60.4
59.6	fbul	19056	MCCONICO	230.0	1	1	60.4
59.6	fbul	19072	HILLTOP	230.0	1	1	60.4
59.6	fbus	19314	PEACOCK	230.0	1	1	60.4
59.6	fbul	19022	DAVIS	230.0	1	1	60.4
59.6	fbus	19042	PARKER	230.0	1	1	60.4

2008 HEAVY AUTUMN, NORTHERN ARIZONA ENERGY PROJECT, PRE-PROJECT
CASE: 08ha_pre-rev1.sav
EOR=9300MW, Min WAPA-DSW Generation Modeled.
Mohave Off-Line.

08ha_pre-rev1-GRPK_McConnico-Davis-230-slo.chf

c:\upslf16\mypslf

Thu Jul 19 16:47:24 2007

NORTHERN ARIZONA ENERGY PROJECT - TRANSIENT STABILITY PLOTS - PAGE 1

BUS VOLTAGE (1)

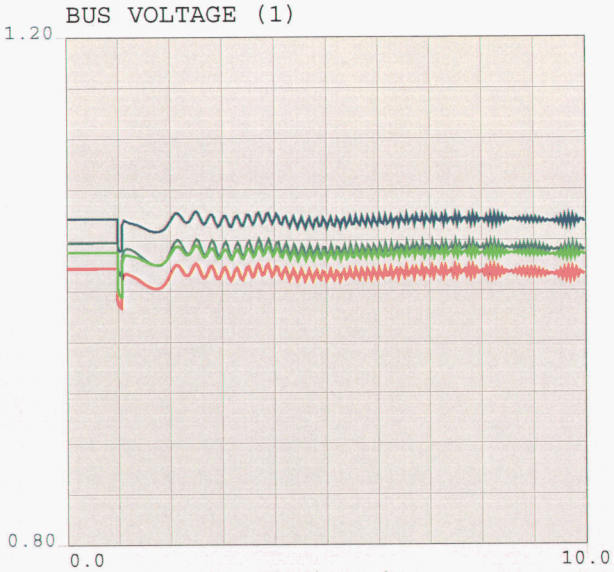

0.8	vbus	19038	MEAD	500.0	1	1	1.2
0.8	vbus	19315	PEACOCK	345.0	1	1	1.2
0.8	vbus	19053	LIBERTY	345.0	1	1	1.2
0.8	vbus	19037	MEAD	345.0	1	1	1.2

BUS VOLTAGE (2)

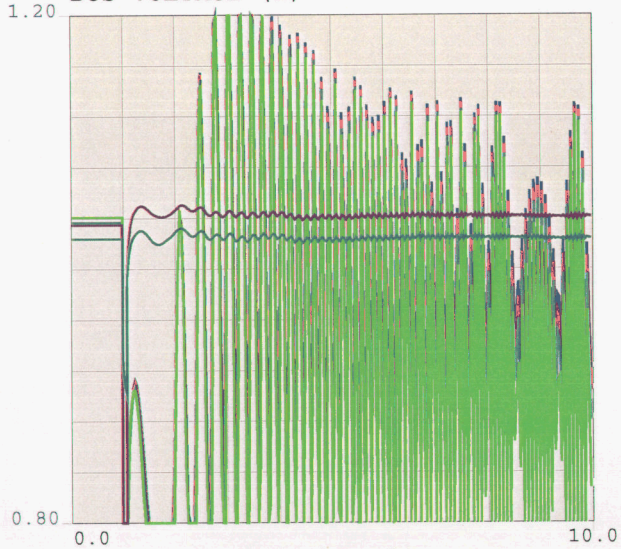

0.8	vbul	19310	GRIFFITH	230.0	1	1	1.2
0.8	vbul	19056	MCCONICO	230.0	1	1	1.2
0.8	vbul	19072	HILLTOP	230.0	1	1	1.2
0.8	vbus	19314	PEACOCK	230.0	1	1	1.2
0.8	vbul	19022	DAVIS	230.0	1	1	1.2
0.8	vbus	19042	PARKER	230.0	1	1	1.2

BUS FREQUENCY (1)

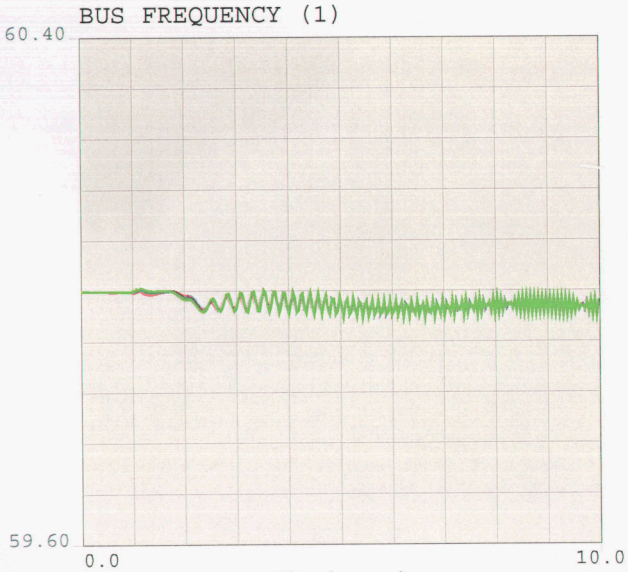

59.6	fbus	19038	MEAD	500.0	1	1	60.4
59.6	fbus	19037	MEAD	345.0	1	1	60.4
59.6	fbus	19315	PEACOCK	345.0	1	1	60.4
59.6	fbus	19053	LIBERTY	345.0	1	1	60.4

BUS FREQUENCY (2)

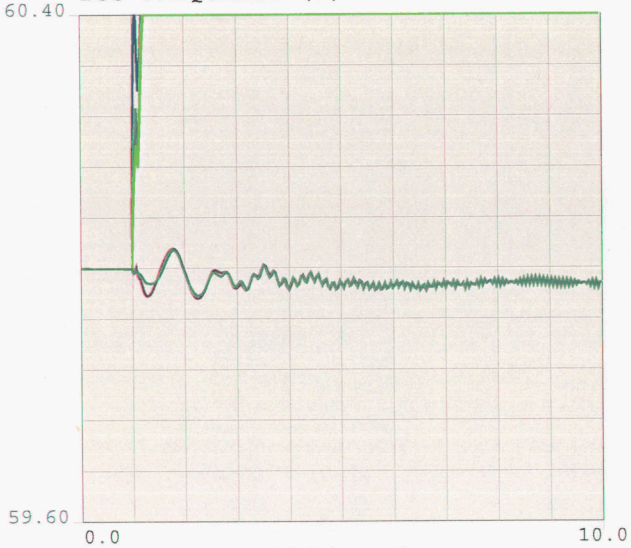

59.6	fbul	19310	GRIFFITH	230.0	1	1	60.4
59.6	fbul	19056	MCCONICO	230.0	1	1	60.4
59.6	fbul	19072	HILLTOP	230.0	1	1	60.4
59.6	fbus	19314	PEACOCK	230.0	1	1	60.4
59.6	fbul	19022	DAVIS	230.0	1	1	60.4
59.6	fbus	19042	PARKER	230.0	1	1	60.4

2008 HEAVY AUTUMN, NORTHERN ARIZONA ENERGY PROJECT, PRE-PROJECT
CASE: 08ha_pre-rev1.sav
EOR=9300MW, Min WAPA-DSW Generation Modeled.
Mohave Off-Line.

08ha_pre-rev1-PKTran_McConnico-Davis-230-slo.chf

c:\upslf16\mypslf

Thu Jul 19 16:47:31 2007

NORTHERN ARIZONA ENERGY PROJECT - TRANSIENT STABILITY PLOTS - PAGE 1

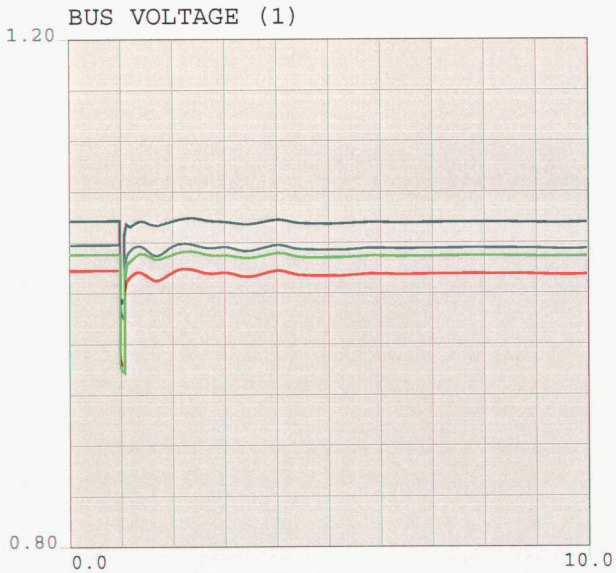

0.8	vbus	19038	MEAD	500.0	1	1	1.2
0.8	vbus	19315	PEACOCK	345.0	1	1	1.2
0.8	vbus	19053	LIBERTY	345.0	1	1	1.2
0.8	vbus	19037	MEAD	345.0	1	1	1.2

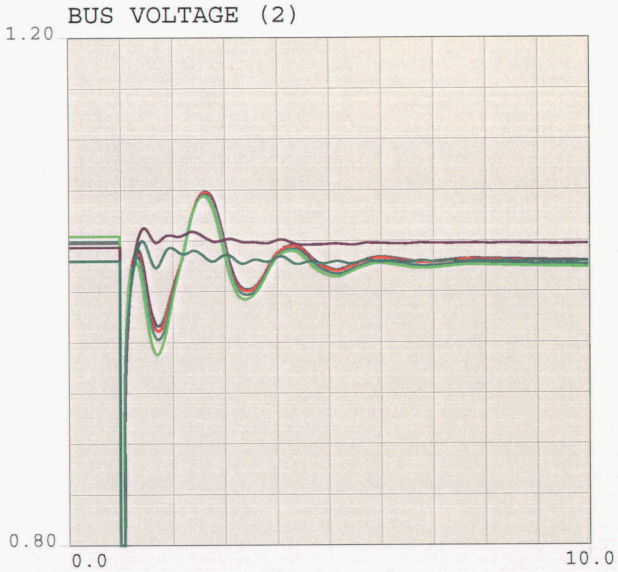

0.8	vbul	19310	GRIFFITH	230.0	1	1	1.2
0.8	vbul	19056	MCCONICO	230.0	1	1	1.2
0.8	vbul	19072	HILLTOP	230.0	1	1	1.2
0.8	vbus	19314	PEACOCK	230.0	1	1	1.2
0.8	vbul	19022	DAVIS	230.0	1	1	1.2
0.8	vbus	19042	PARKER	230.0	1	1	1.2

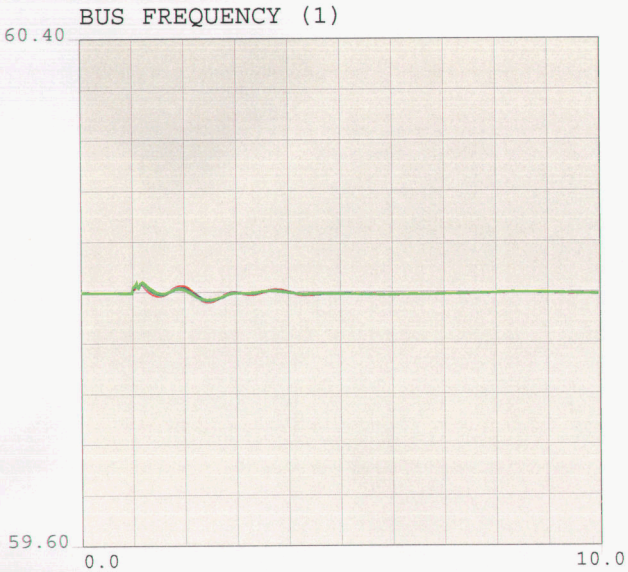

59.6	fbus	19038	MEAD	500.0	1	1	60.4
59.6	fbus	19037	MEAD	345.0	1	1	60.4
59.6	fbus	19315	PEACOCK	345.0	1	1	60.4
59.6	fbus	19053	LIBERTY	345.0	1	1	60.4

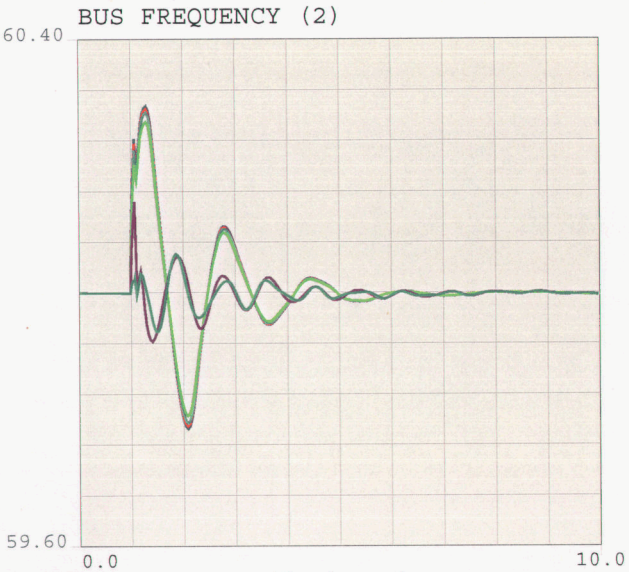

59.6	fbul	19310	GRIFFITH	230.0	1	1	60.4
59.6	fbul	19056	MCCONICO	230.0	1	1	60.4
59.6	fbul	19072	HILLTOP	230.0	1	1	60.4
59.6	fbus	19314	PEACOCK	230.0	1	1	60.4
59.6	fbul	19022	DAVIS	230.0	1	1	60.4
59.6	fbus	19042	PARKER	230.0	1	1	60.4

2008 HEAVY AUTUMN, NORTHERN ARIZONA ENERGY PROJECT, PRE-PROJECT
CASE: 08ha_pre-rev1.sav
EOR=9300MW, Min WAPA-DSW Generation Modeled.
Mohave Off-Line.

08ha_pre-pkTran-520MW-rev1_Davis-McConnico-230-slo.chf

c:\upslf16\mypslf

Thu Jul 19 16:47:39 2007

NORTHERN ARIZONA ENERGY PROJECT - TRANSIENT STABILITY PLOTS - PAGE 1

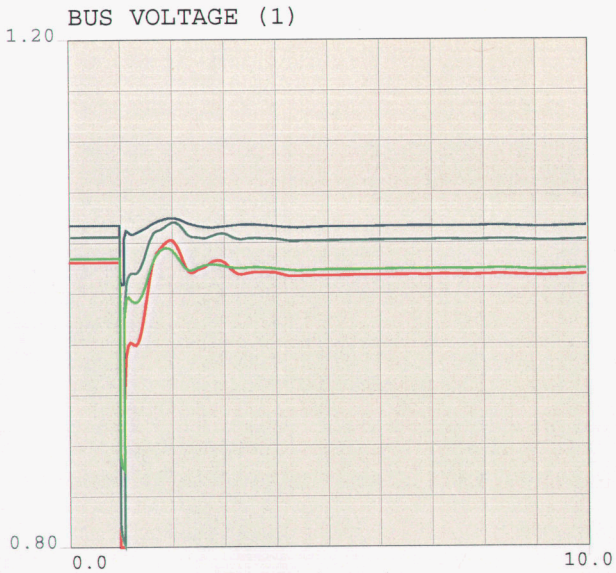

0.8	vbus	19038	MEAD	500.0	1	1	1.2
0.8	vbus	19315	PEACOCK	345.0	1	1	1.2
0.8	vbus	19053	LIBERTY	345.0	1	1	1.2
0.8	vbus	19037	MEAD	345.0	1	1	1.2

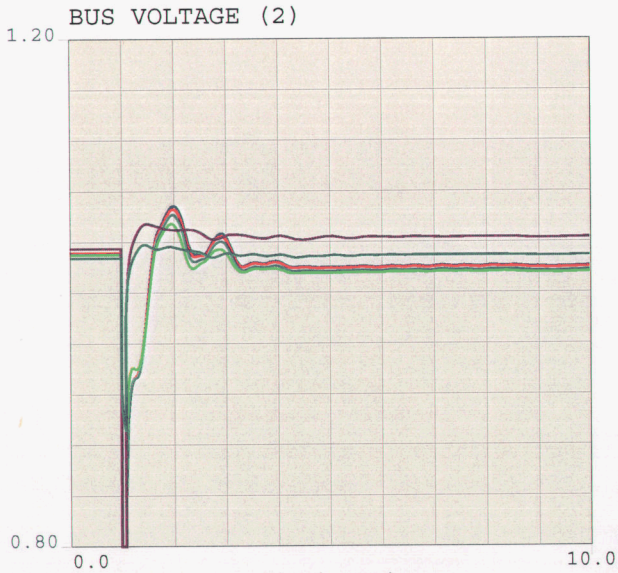

0.8	vbul	19310	GRIFFITH	230.0	1	1	1.2
0.8	vbul	19056	MCCONICO	230.0	1	1	1.2
0.8	vbul	19072	HILLTOP	230.0	1	1	1.2
0.8	vbus	19314	PEACOCK	230.0	1	1	1.2
0.8	vbul	19022	DAVIS	230.0	1	1	1.2
0.8	vbus	19042	PARKER	230.0	1	1	1.2

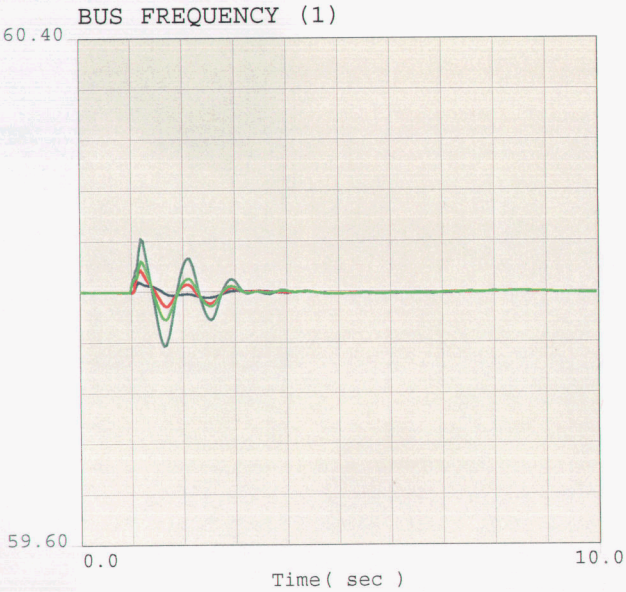

59.6	fbus	19038	MEAD	500.0	1	1	60.4
59.6	fbus	19037	MEAD	345.0	1	1	60.4
59.6	fbus	19315	PEACOCK	345.0	1	1	60.4
59.6	fbus	19053	LIBERTY	345.0	1	1	60.4

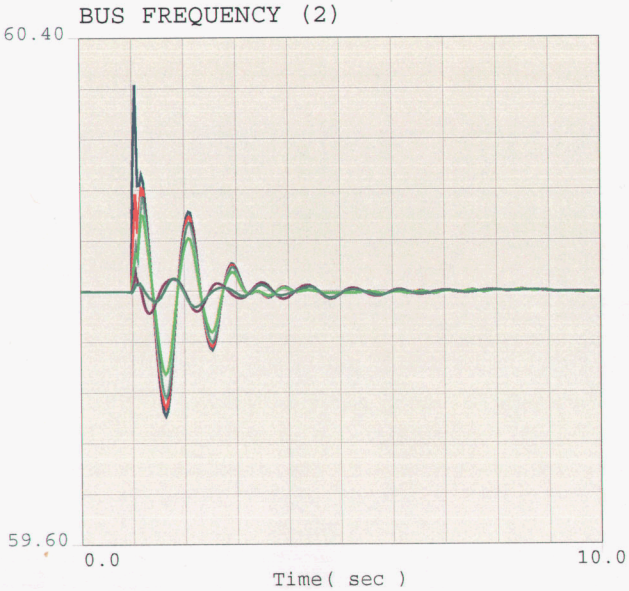

59.6	fbul	19310	GRIFFITH	230.0	1	1	60.4
59.6	fbul	19056	MCCONICO	230.0	1	1	60.4
59.6	fbul	19072	HILLTOP	230.0	1	1	60.4
59.6	fbus	19314	PEACOCK	230.0	1	1	60.4
59.6	fbul	19022	DAVIS	230.0	1	1	60.4
59.6	fbus	19042	PARKER	230.0	1	1	60.4

2008 HEAVY AUTUMN, NORTHERN ARIZONA ENERGY PROJECT, PRE-PROJECT
CASE: 08ha_pre_max-rev1.sav
EOR=9300MW, Maximum WAPA-DSW Generation Modeled.
Mohave Off-line.

08ha_pre_max-rev1_McConnico-Davis-230-slo.chf

c:\upslf16\mypslf

Thu Jul 19 16:47:45 2007

NORTHERN ARIZONA ENERGY PROJECT - TRANSIENT STABILITY PLOTS - PAGE 1

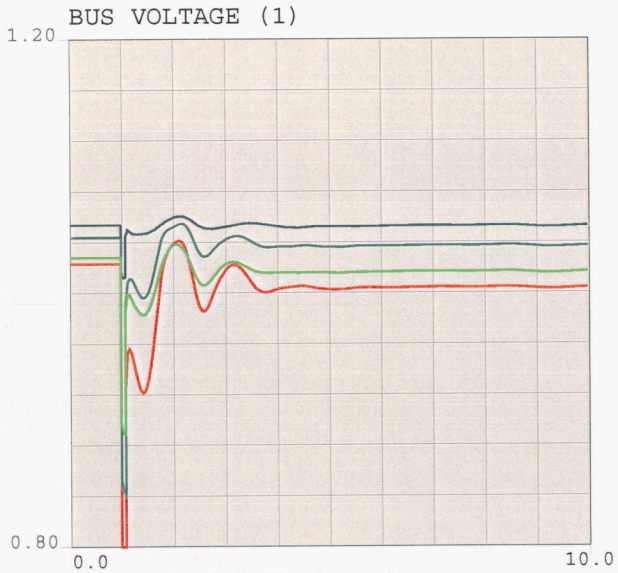

0.8	vbus	19038	MEAD	500.0	1	1	1.2
0.8	vbus	19315	PEACOCK	345.0	1	1	1.2
0.8	vbus	19053	LIBERTY	345.0	1	1	1.2
0.8	vbus	19037	MEAD	345.0	1	1	1.2

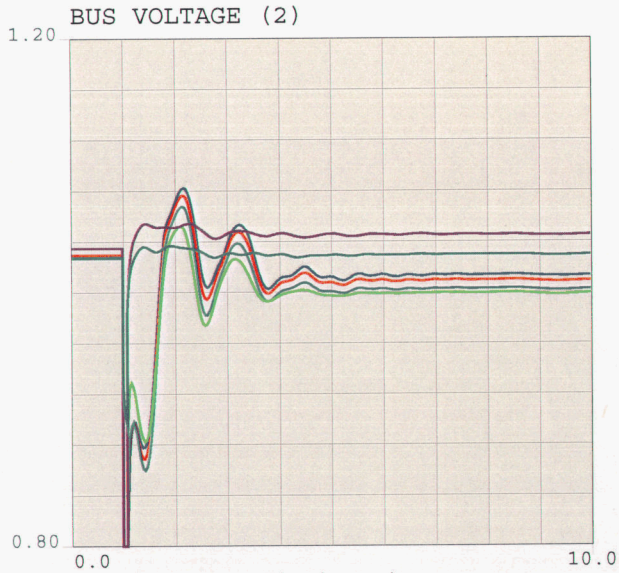

0.8	vbul	19310	GRIFFITH	230.0	1	1	1.2
0.8	vbul	19056	MCCONICO	230.0	1	1	1.2
0.8	vbul	19072	HILLTOP	230.0	1	1	1.2
0.8	vbus	19314	PEACOCK	230.0	1	1	1.2
0.8	vbul	19022	DAVIS	230.0	1	1	1.2
0.8	vbus	19042	PARKER	230.0	1	1	1.2

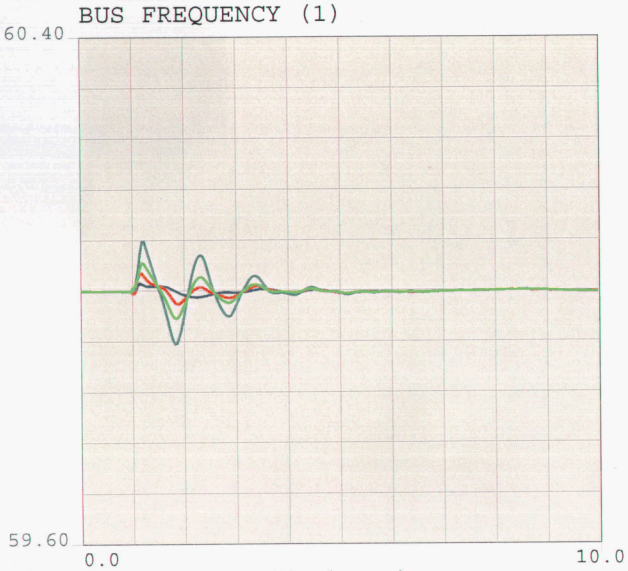

59.6	fbus	19038	MEAD	500.0	1	1	60.4
59.6	fbus	19037	MEAD	345.0	1	1	60.4
59.6	fbus	19315	PEACOCK	345.0	1	1	60.4
59.6	fbus	19053	LIBERTY	345.0	1	1	60.4

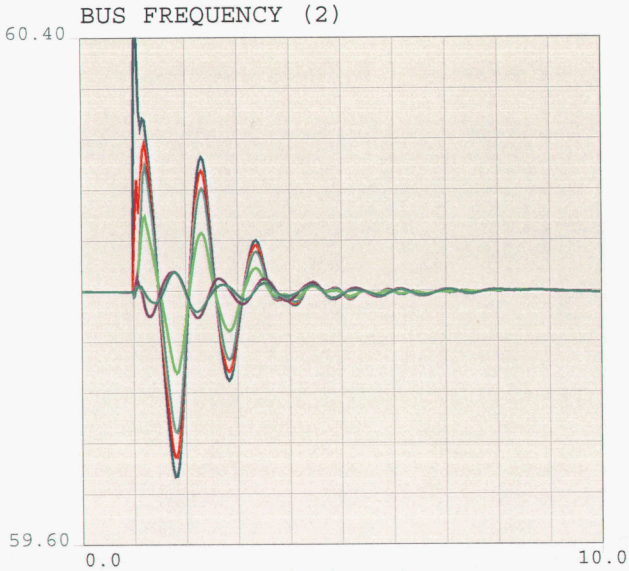

59.6	fbul	19310	GRIFFITH	230.0	1	1	60.4
59.6	fbul	19056	MCCONICO	230.0	1	1	60.4
59.6	fbul	19072	HILLTOP	230.0	1	1	60.4
59.6	fbus	19314	PEACOCK	230.0	1	1	60.4
59.6	fbul	19022	DAVIS	230.0	1	1	60.4
59.6	fbus	19042	PARKER	230.0	1	1	60.4

2008 HEAVY AUTUMN, NORTHERN ARIZONA ENERGY PROJECT, PRE-PROJECT
CASE: 08ha_pre_max-rev1.sav
EOR=9300MW, Maximum WAPA-DSW Generation Modeled.
Mohave Off-line.

08ha_pre_max-GRPK_McConnico-Davis-230-slo.chf

c:\upslf16\mypslf

Thu Jul 19 16:47:50 2007

NORTHERN ARIZONA ENERGY PROJECT - TRANSIENT STABILITY PLOTS - PAGE 1

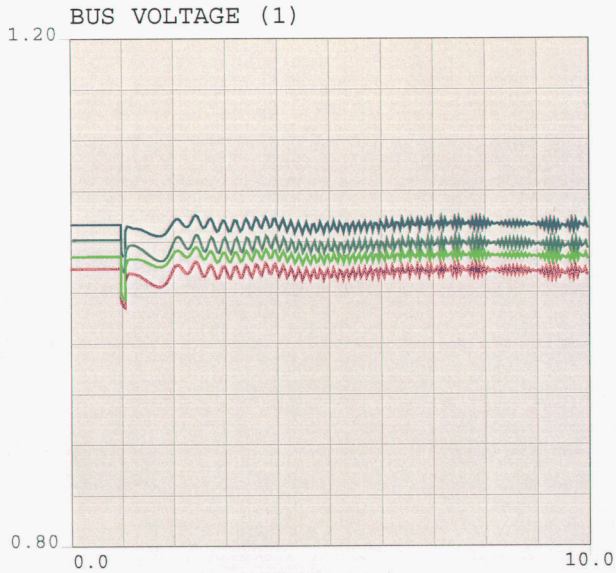

0.8	vbus	19038	MEAD	500.0	1	1	1.2
0.8	vbus	19315	PEACOCK	345.0	1	1	1.2
0.8	vbus	19053	LIBERTY	345.0	1	1	1.2
0.8	vbus	19037	MEAD	345.0	1	1	1.2

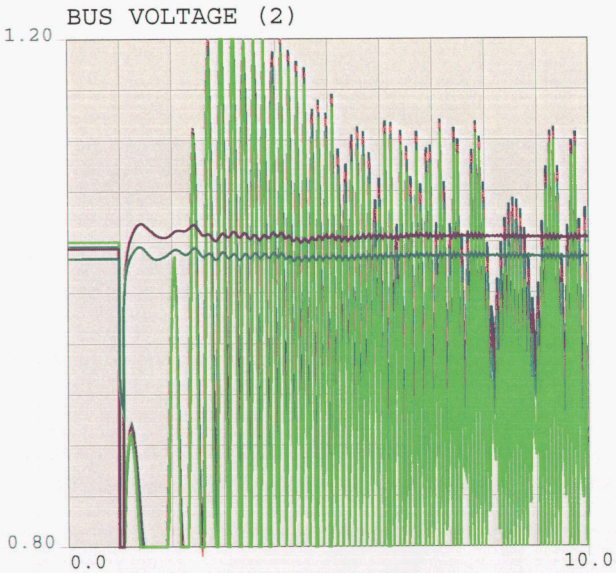

0.8	vbul	19310	GRIFFITH	230.0	1	1	1.2
0.8	vbul	19056	MCCONICO	230.0	1	1	1.2
0.8	vbul	19072	HILLTOP	230.0	1	1	1.2
0.8	vbus	19314	PEACOCK	230.0	1	1	1.2
0.8	vbul	19022	DAVIS	230.0	1	1	1.2
0.8	vbus	19042	PARKER	230.0	1	1	1.2

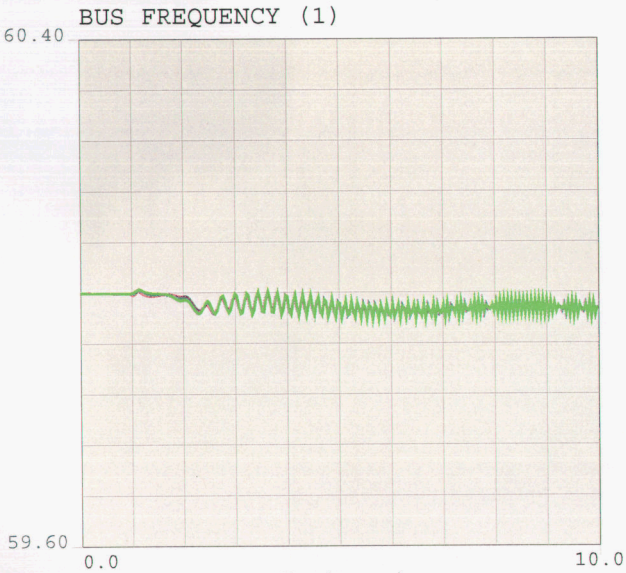

59.6	fbus	19038	MEAD	500.0	1	1	60.4
59.6	fbus	19037	MEAD	345.0	1	1	60.4
59.6	fbus	19315	PEACOCK	345.0	1	1	60.4
59.6	fbus	19053	LIBERTY	345.0	1	1	60.4

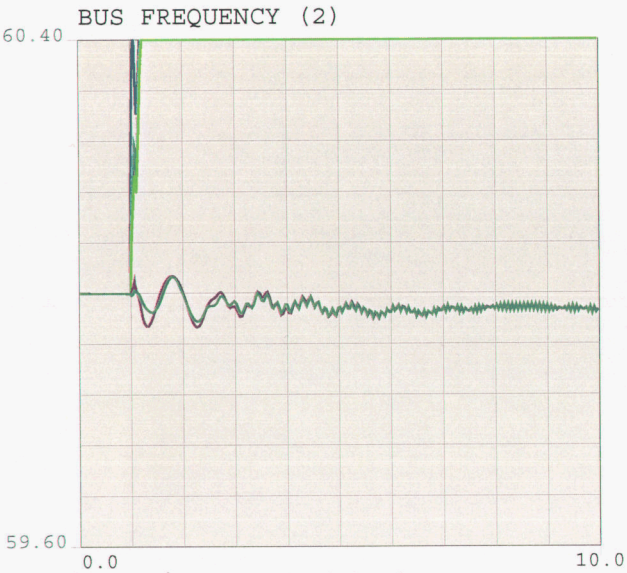

59.6	fbul	19310	GRIFFITH	230.0	1	1	60.4
59.6	fbul	19056	MCCONICO	230.0	1	1	60.4
59.6	fbul	19072	HILLTOP	230.0	1	1	60.4
59.6	fbus	19314	PEACOCK	230.0	1	1	60.4
59.6	fbul	19022	DAVIS	230.0	1	1	60.4
59.6	fbus	19042	PARKER	230.0	1	1	60.4

2008 HEAVY AUTUMN, NORTHERN ARIZONA ENERGY PROJECT, PRE-PROJECT
CASE: 08ha_pre_max-rev1.sav
EOR=9300MW, Maximum WAPA-DSW Generation Modeled.
Mohave Off-line.

08ha_pre_max-PKTran_McConnico-Davis-230-slo.chf

c:\upslf16\mypslf

Thu Jul 19 16:47:56 2007

NORTHERN ARIZONA ENERGY PROJECT - TRANSIENT STABILITY PLOTS - PAGE 1

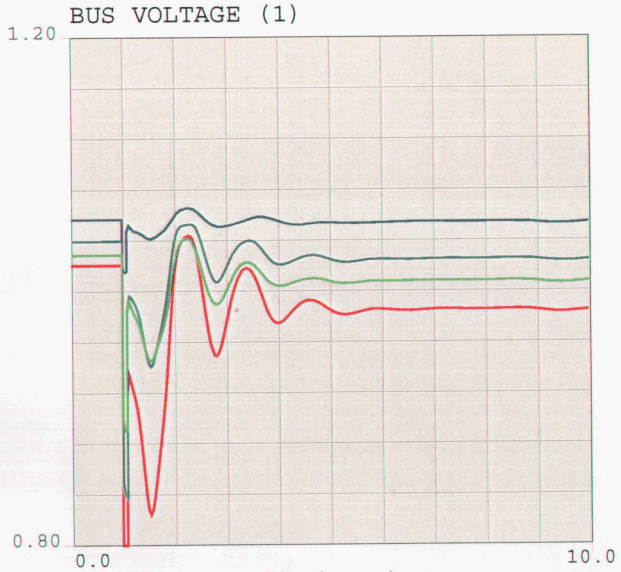

0.8	vbus	19038	MEAD	500.0	1	1	1.2
0.8	vbus	19315	PEACOCK	345.0	1	1	1.2
0.8	vbus	19053	LIBERTY	345.0	1	1	1.2
0.8	vbus	19037	MEAD	345.0	1	1	1.2

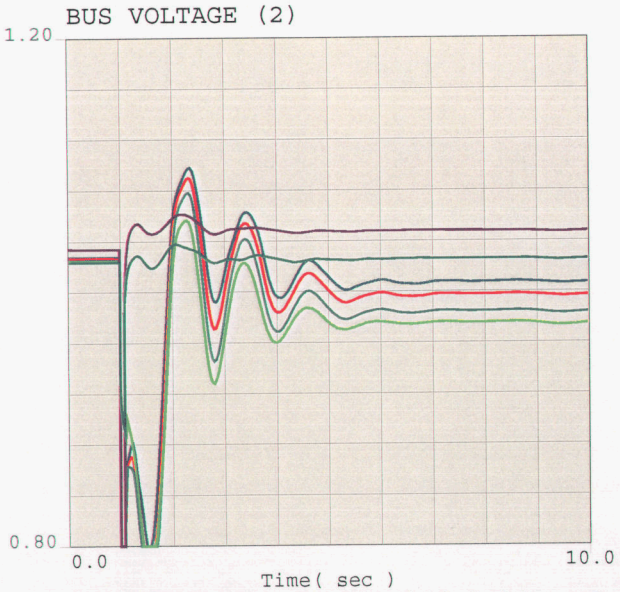

0.8	vbul	19310	GRIFFITH	230.0	1	1	1.2
0.8	vbul	19056	MCCONICO	230.0	1	1	1.2
0.8	vbul	19072	HILLTOP	230.0	1	1	1.2
0.8	vbus	19314	PEACOCK	230.0	1	1	1.2
0.8	vbul	19022	DAVIS	230.0	1	1	1.2
0.8	vbus	19042	PARKER	230.0	1	1	1.2

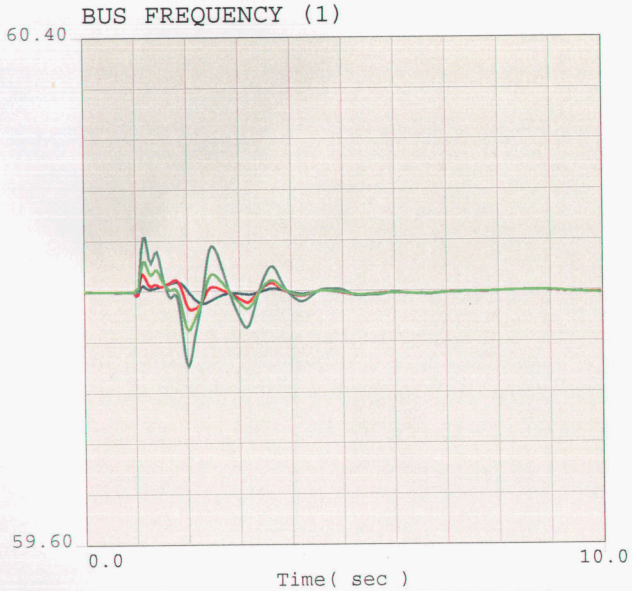

59.6	fbus	19038	MEAD	500.0	1	1	60.4
59.6	fbus	19037	MEAD	345.0	1	1	60.4
59.6	fbus	19315	PEACOCK	345.0	1	1	60.4
59.6	fbus	19053	LIBERTY	345.0	1	1	60.4

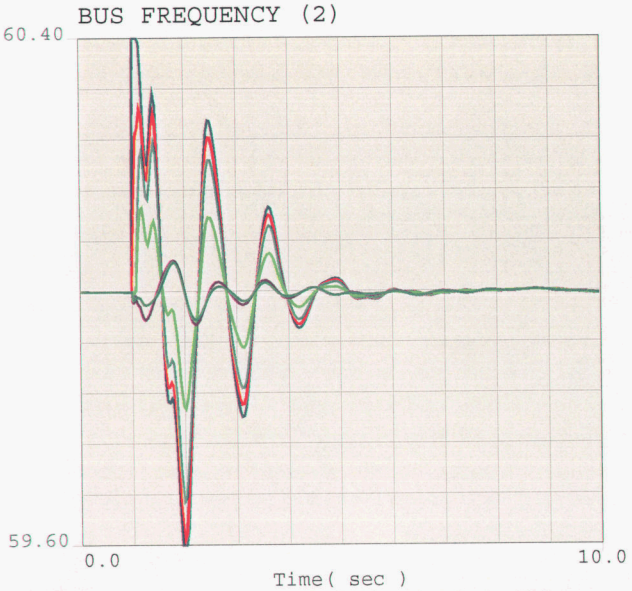

59.6	fbul	19310	GRIFFITH	230.0	1	1	60.4
59.6	fbul	19056	MCCONICO	230.0	1	1	60.4
59.6	fbul	19072	HILLTOP	230.0	1	1	60.4
59.6	fbus	19314	PEACOCK	230.0	1	1	60.4
59.6	fbul	19022	DAVIS	230.0	1	1	60.4
59.6	fbus	19042	PARKER	230.0	1	1	60.4

2008 HEAVY AUTUMN, NORTHERN ARIZONA ENERGY PROJECT, POST-PROJECT - Area Interchange

CASE: 08ha_pst_AI-rev1.sav

EOR=9300MW, Minimum WAPA-DSW Generation Modeled.

Mohave Off-Line.

Modeled Northern Arizona Energy Project - 180 MW Net

08ha_pst_AI_GRPK_McConnico-Davis-230-slo.chf

c:\upslf16\mypslf

Thu Jul 19 16:48:48 2007

NORTHERN ARIZONA ENERGY PROJECT - TRANSIENT STABILITY PLOTS - PAGE 2

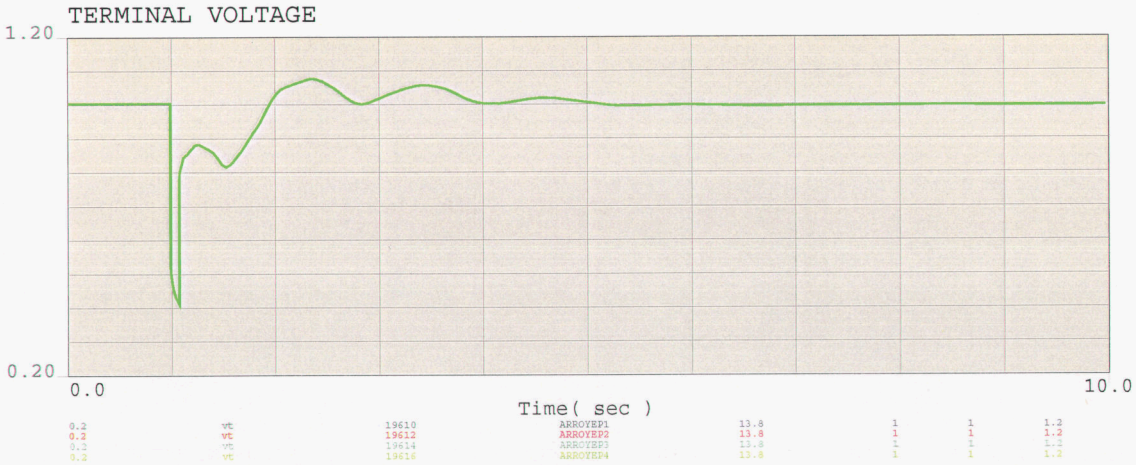

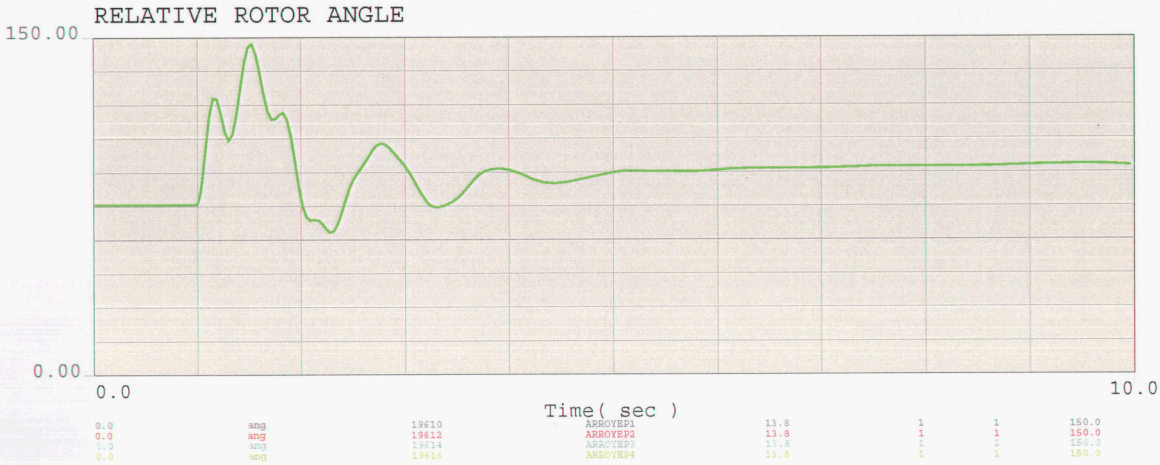

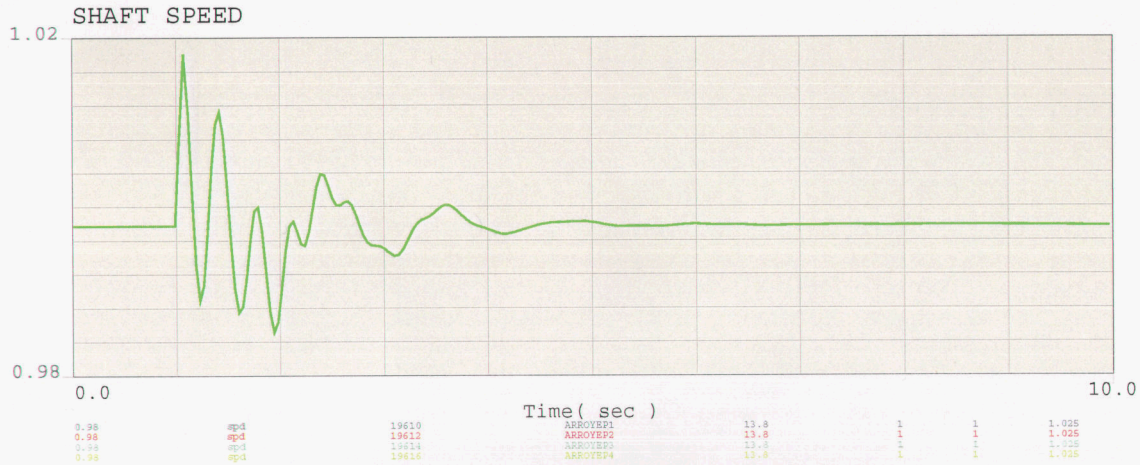

2008 HEAVY AUTUMN, NORTHERN ARIZONA ENERGY PROJECT, POST-PROJECT - Area Interchange

CASE: 08ha_pst_AI-rev1.sav

EOR=9300MW, Minimum WAPA-DSW Generation Modeled.

Mohave Off-Line.

Modeled Northern Arizona Energy Project - 180 MW Net

NORTHERN ARIZONA ENERGY PROJECT - TRANSIENT STABILITY PLOTS - PAGE 1

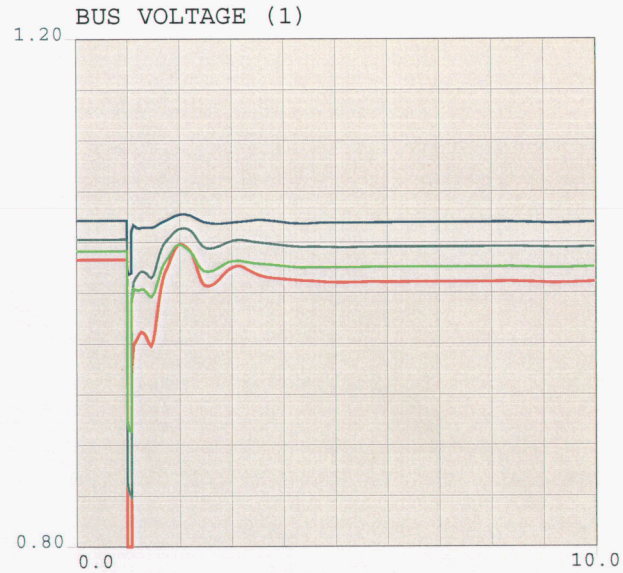

0.8	vbus	19038	MEAD	500.0	1	1	1.2
0.8	vbus	19315	PEACOCK	345.0	1	1	1.2
0.8	vbus	19053	LIBERTY	345.0	1	1	1.2
0.8	vbus	19037	MEAD	345.0	1	1	1.2

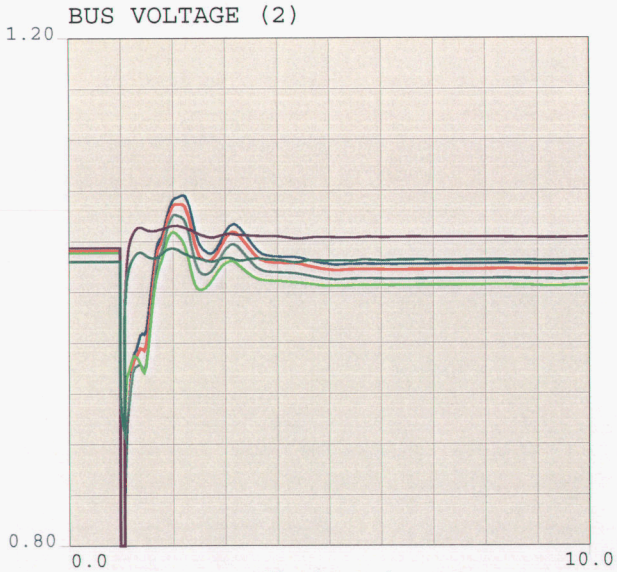

0.8	vbul	19310	GRIFFITH	230.0	1	1	1.2
0.8	vbul	19056	MCCONICO	230.0	1	1	1.2
0.8	vbul	19072	HILLTOP	230.0	1	1	1.2
0.8	vbus	19314	PEACOCK	230.0	1	1	1.2
0.8	vbul	19022	DAVIS	230.0	1	1	1.2
0.8	vbus	19042	PARKER	230.0	1	1	1.2

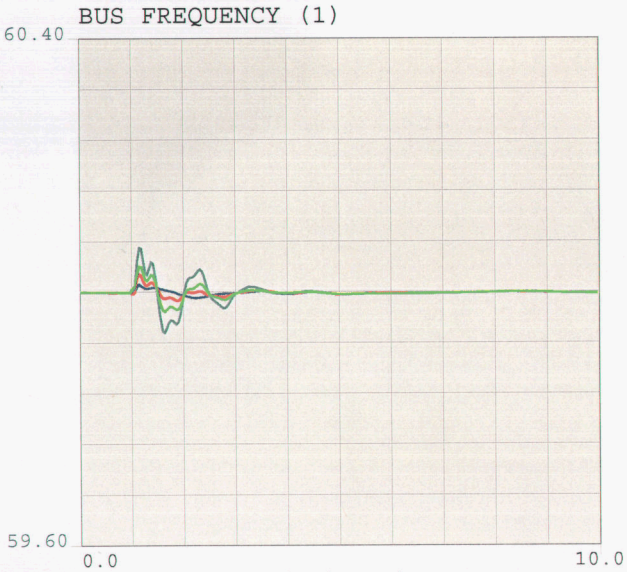

59.6	fbus	19038	MEAD	500.0	1	1	60.4
59.6	fbus	19037	MEAD	345.0	1	1	60.4
59.6	fbus	19315	PEACOCK	345.0	1	1	60.4
59.6	fbus	19053	LIBERTY	345.0	1	1	60.4

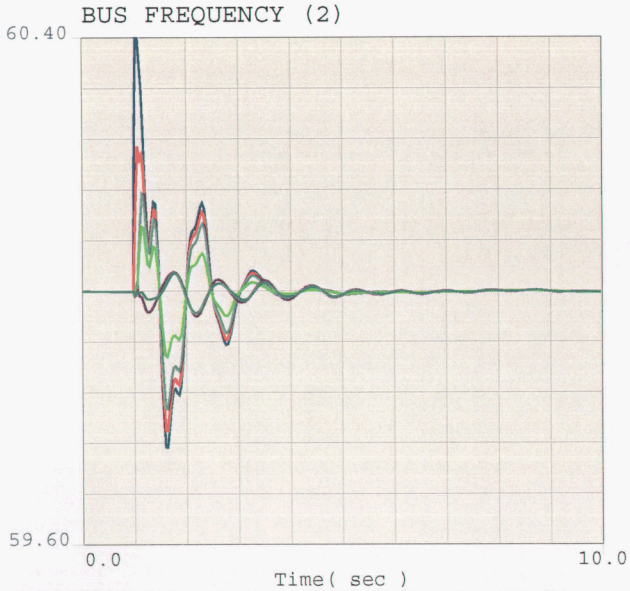

59.6	fbul	19310	GRIFFITH	230.0	1	1	60.4
59.6	fbul	19056	MCCONICO	230.0	1	1	60.4
59.6	fbul	19072	HILLTOP	230.0	1	1	60.4
59.6	fbus	19314	PEACOCK	230.0	1	1	60.4
59.6	fbul	19022	DAVIS	230.0	1	1	60.4
59.6	fbus	19042	PARKER	230.0	1	1	60.4

2008 HEAVY AUTUMN, NORTHERN ARIZONA ENERGY PROJECT, POST-PROJECT - Area Interchange
CASE: 08ha_pst_AI-rev1.sav
EOR=9300MW, Minimum WAPA-DSW Generation Modeled.
Mohave Off-Line.
Modeled Northern Arizona Energy Project - 180 MW Net

08ha_pst_AI-GRPK-reduced_McConnico-Davis-230-slo.chf

c:\upslf16\mypslf

Thu Jul 19 16:48:54 2007

TERMINAL VOLTAGE

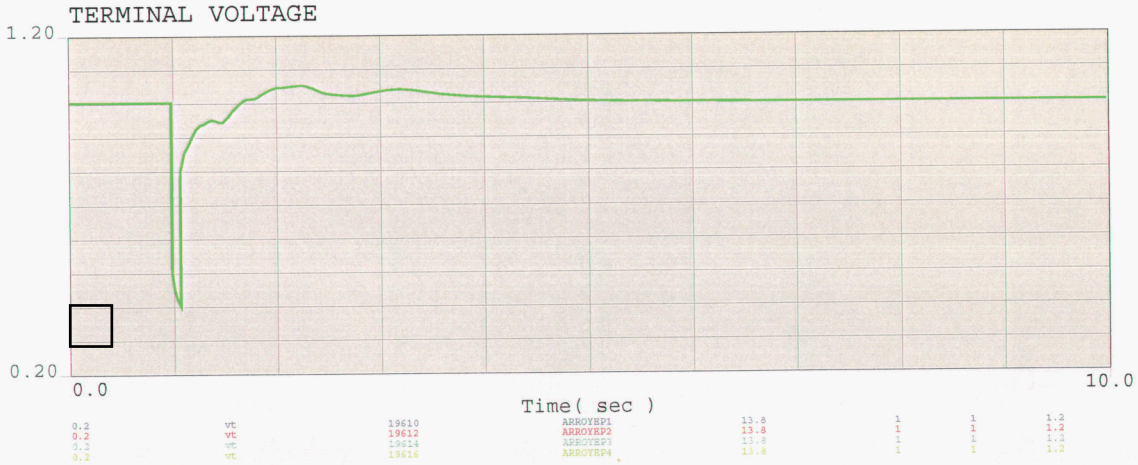

RELATIVE ROTOR ANGLE

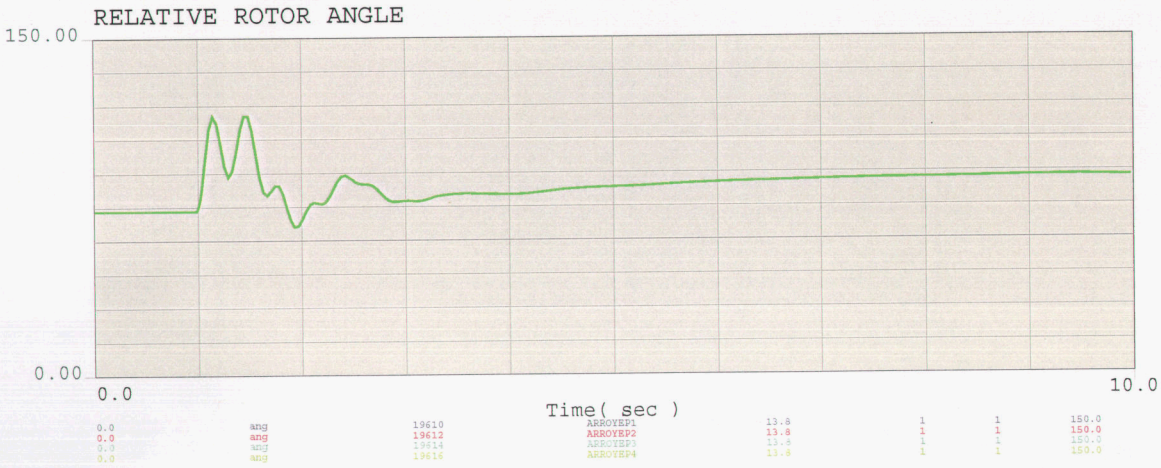

SHAFT SPEED

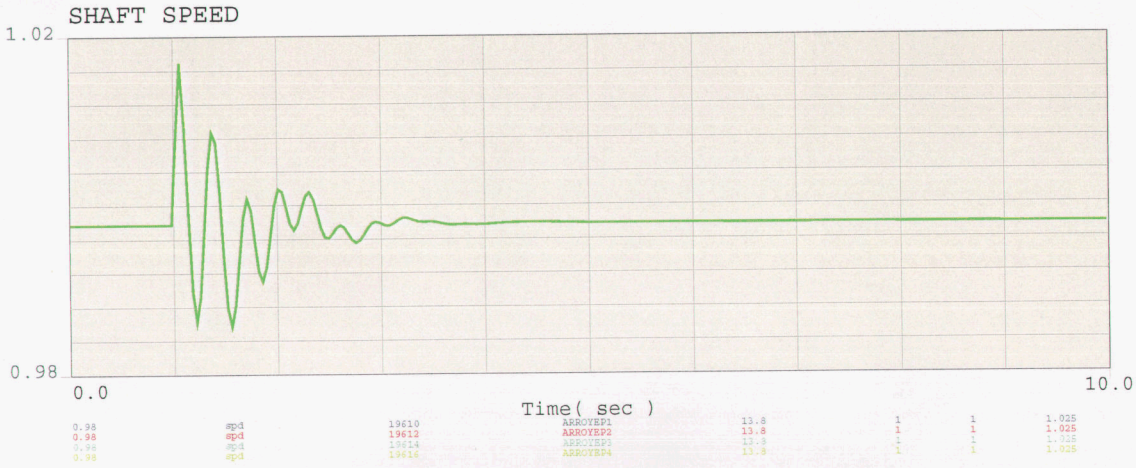

2008 HEAVY AUTUMN, NORTHERN ARIZONA ENERGY PROJECT, POST-PROJECT - Area Interchange
CASE: 08ha_pst_AI-rev1.sav
EOR=9300MW, Minimum WAPA-DSW Generation Modeled.
Mohave Off-Line.
Modeled Northern Arizona Energy Project - 180 MW Net

NORTHERN ARIZONA ENERGY PROJECT - TRANSIENT STABILITY PLOTS - PAGE 1

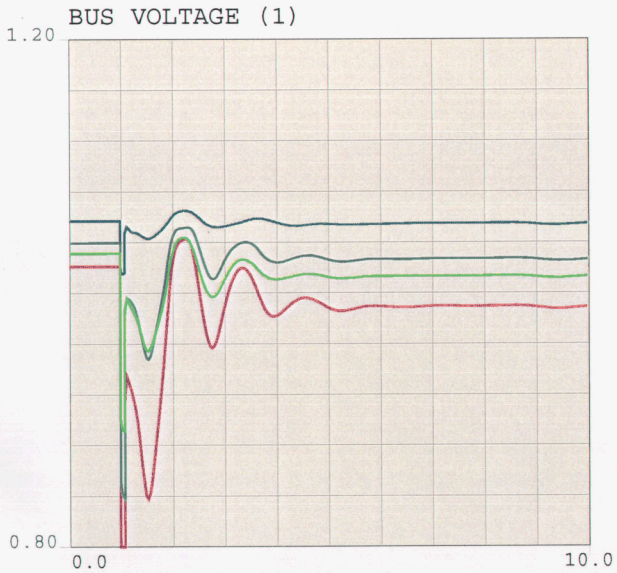

0.8	vbus	19038	MEAD	500.0	1	1	1.2
0.8	vbus	19315	PEACOCK	345.0	1	1	1.2
0.8	vbus	19053	LIBERTY	345.0	1	1	1.2
0.8	vbus	19037	MEAD	345.0	1	1	1.2

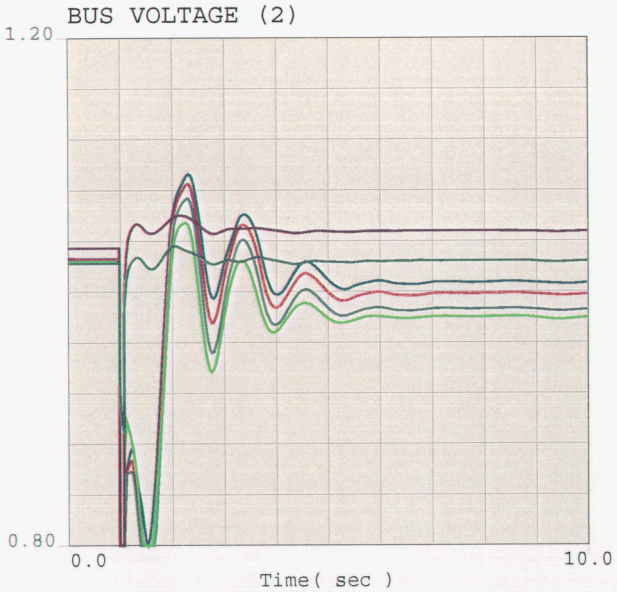

0.8	vbul	19310	GRIFFITH	230.0	1	1	1.2
0.8	vbul	19056	MCCONICO	230.0	1	1	1.2
0.8	vbul	19072	HILLTOP	230.0	1	1	1.2
0.8	vbus	19314	PEACOCK	230.0	1	1	1.2
0.8	vbul	19022	DAVIS	230.0	1	1	1.2
0.8	vbus	19042	PARKER	230.0	1	1	1.2

59.6	fbus	19038	MEAD	500.0	1	1	60.4
59.6	fbus	19037	MEAD	345.0	1	1	60.4
59.6	fbus	19315	PEACOCK	345.0	1	1	60.4
59.6	fbus	19053	LIBERTY	345.0	1	1	60.4

59.6	fbul	19310	GRIFFITH	230.0	1	1	60.4
59.6	fbul	19056	MCCONICO	230.0	1	1	60.4
59.6	fbul	19072	HILLTOP	230.0	1	1	60.4
59.6	fbus	19314	PEACOCK	230.0	1	1	60.4
59.6	fbul	19022	DAVIS	230.0	1	1	60.4
59.6	fbus	19042	PARKER	230.0	1	1	60.4

2008 HEAVY AUTUMN, NORTHERN ARIZONA ENERGY PROJECT, POST-PROJECT - UNS Load Increased
CASE: 08ha_pst_LD-rev1.sav
EOR=9300MW, Minimum WAPA-DSW Generation Modeled.
Mohave Off-Line.
Modeled Northern Arizona Energy Project - 180 MW Net

08ha_pst_LD_GRPK_McConnico-Davis-230-slo.chf

c:\upslf16\mypslf

Thu Jul 19 16:49:00 2007

TERMINAL VOLTAGE

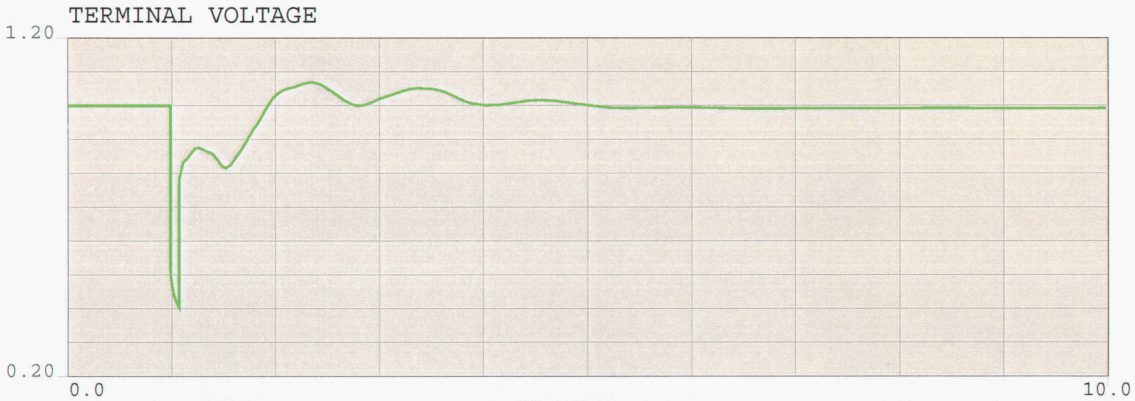

0.2	vt	19610	ARROYEP1	13.8	1	1	1.2
0.2	vt	19612	ARROYEP2	13.8	1	1	1.2
0.2	vt	19614	ARROYEP3	13.8	1	1	1.2
0.2	vt	19616	ARROYEP4	13.8	1	1	1.2

RELATIVE ROTOR ANGLE

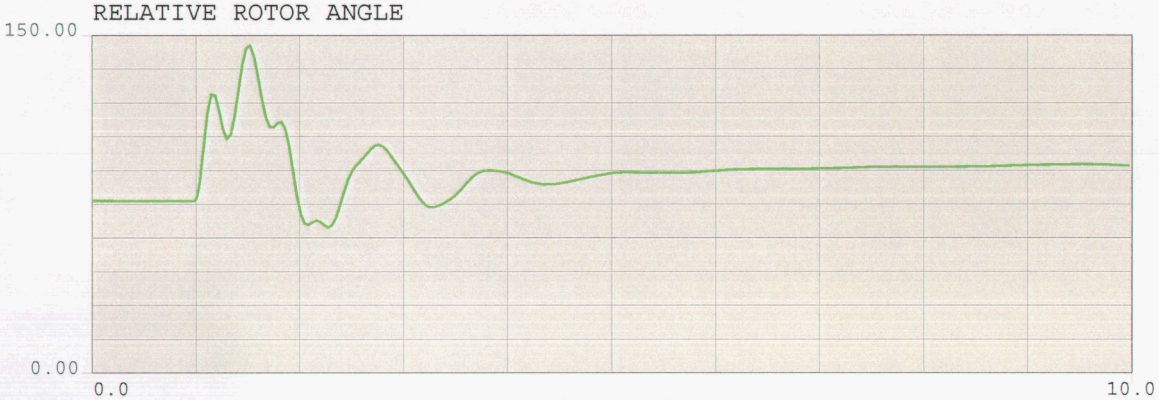

0.0	ang	19610	ARROYEP1	13.8	1	1	150.0
0.0	ang	19612	ARROYEP2	13.8	1	1	150.0
0.0	ang	19614	ARROYEP3	13.8	1	1	150.0
0.0	ang	19616	ARROYEP4	13.8	1	1	150.0

SHAFT SPEED

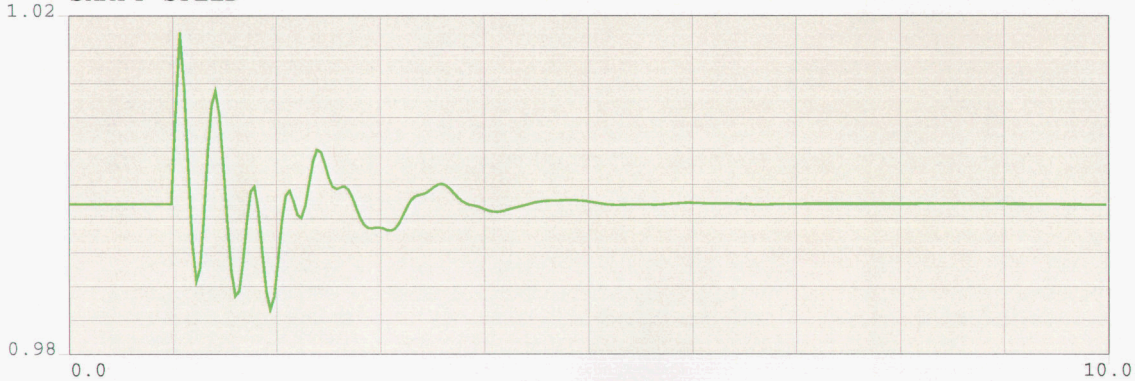

0.98	spd	19610	ARROYEP1	13.8	1	1	1.025
0.98	spd	19612	ARROYEP2	13.8	1	1	1.025
0.98	spd	19614	ARROYEP3	13.8	1	1	1.025
0.98	spd	19616	ARROYEP4	13.8	1	1	1.025

2008 HEAVY AUTUMN, NORTHERN ARIZONA ENERGY PROJECT, POST-PROJECT - UNS Load Increased
CASE: 08ha_pst_LD-rev1.sav
EOR=9300MW, Minimum WAPA-DSW Generation Modeled.
Mohave Off-Line.
Modeled Northern Arizona Energy Project - 180 MW Net

NORTHERN ARIZONA ENERGY PROJECT - TRANSIENT STABILITY PLOTS - PAGE 1

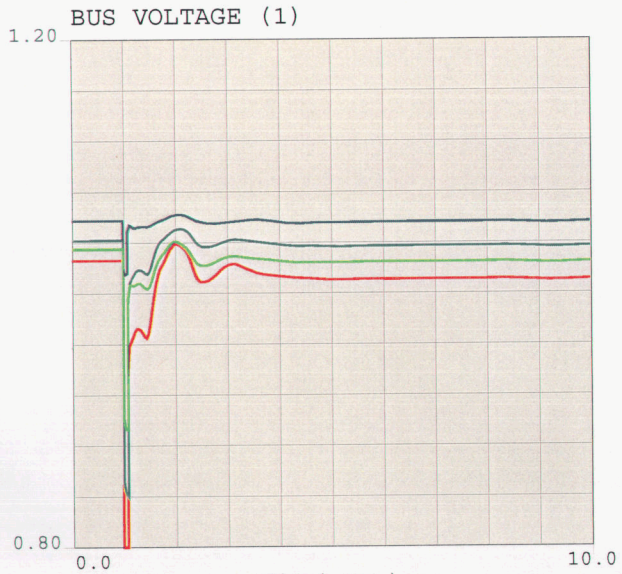

0.8	vbus	19038	MEAD	500.0	1	1	1.2
0.8	vbus	19315	PEACOCK	345.0	1	1	1.2
0.8	vbus	19053	LIBERTY	345.0	1	1	1.2
0.8	vbus	19037	MEAD	345.0	1	1	1.2

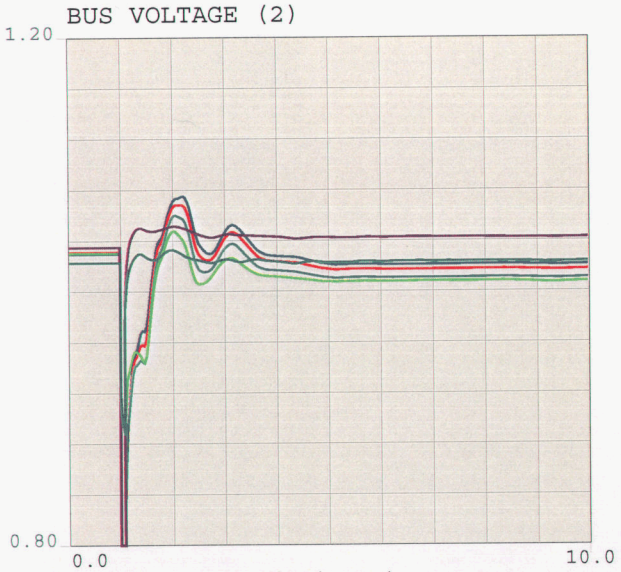

0.8	vbul	19310	GRIFFITH	230.0	1	1	1.2
0.8	vbul	19056	MCCONICO	230.0	1	1	1.2
0.8	vbul	19072	HILLTOP	230.0	1	1	1.2
0.8	vbus	19314	PEACOCK	230.0	1	1	1.2
0.8	vbul	19022	DAVIS	230.0	1	1	1.2
0.8	vbus	19042	PARKER	230.0	1	1	1.2

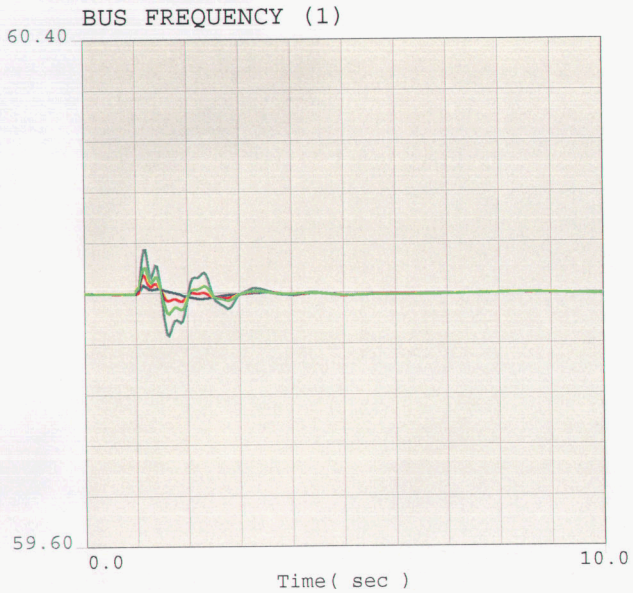

59.6	fbus	19038	MEAD	500.0	1	1	60.4
59.6	fbus	19037	MEAD	345.0	1	1	60.4
59.6	fbus	19315	PEACOCK	345.0	1	1	60.4
59.6	fbus	19053	LIBERTY	345.0	1	1	60.4

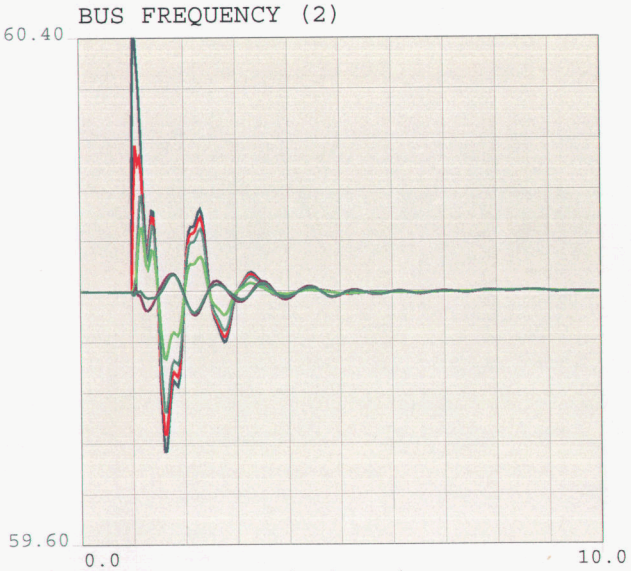

59.6	fbul	19310	GRIFFITH	230.0	1	1	60.4
59.6	fbul	19056	MCCONICO	230.0	1	1	60.4
59.6	fbul	19072	HILLTOP	230.0	1	1	60.4
59.6	fbus	19314	PEACOCK	230.0	1	1	60.4
59.6	fbul	19022	DAVIS	230.0	1	1	60.4
59.6	fbus	19042	PARKER	230.0	1	1	60.4

2008 HEAVY AUTUMN, NORTHERN ARIZONA ENERGY PROJECT, POST-PROJECT - UNS Load Increased

CASE: 08ha_pst_LD-rev1.sav

EOR=9300MW, Minimum WAPA-DSW Generation Modeled.

Mohave Off-Line.

Modeled Northern Arizona Energy Project - 180 MW Net

08ha_pst_LD-GRPK-reduced_McConnico-Davis-230-slo.chf

c:\upslf16\mypslf

Thu Jul 19 16:49:08 2007

TERMINAL VOLTAGE

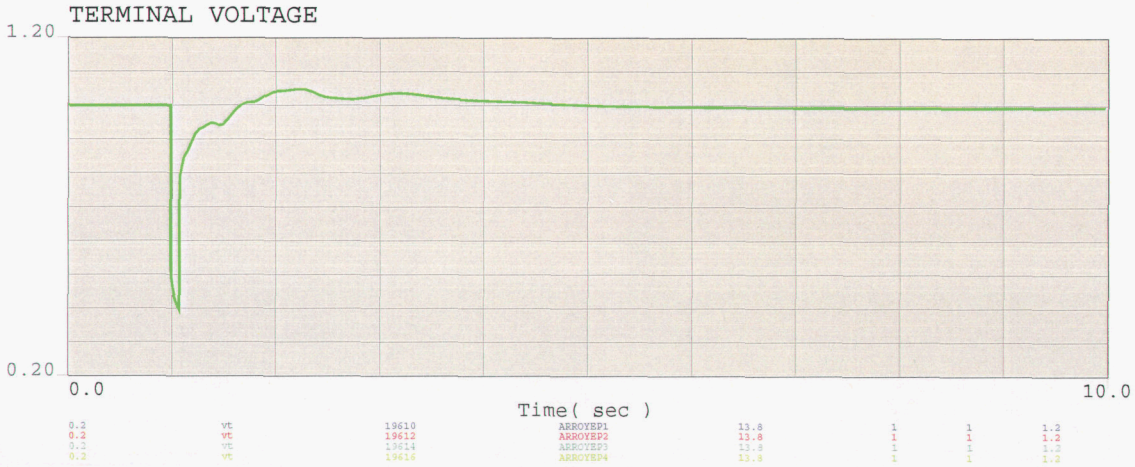

RELATIVE ROTOR ANGLE

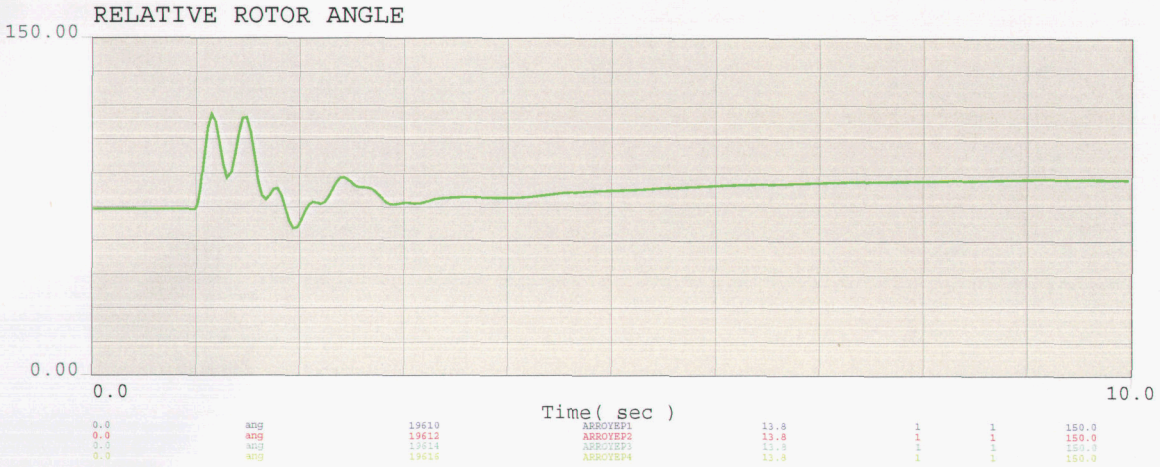

SHAFT SPEED

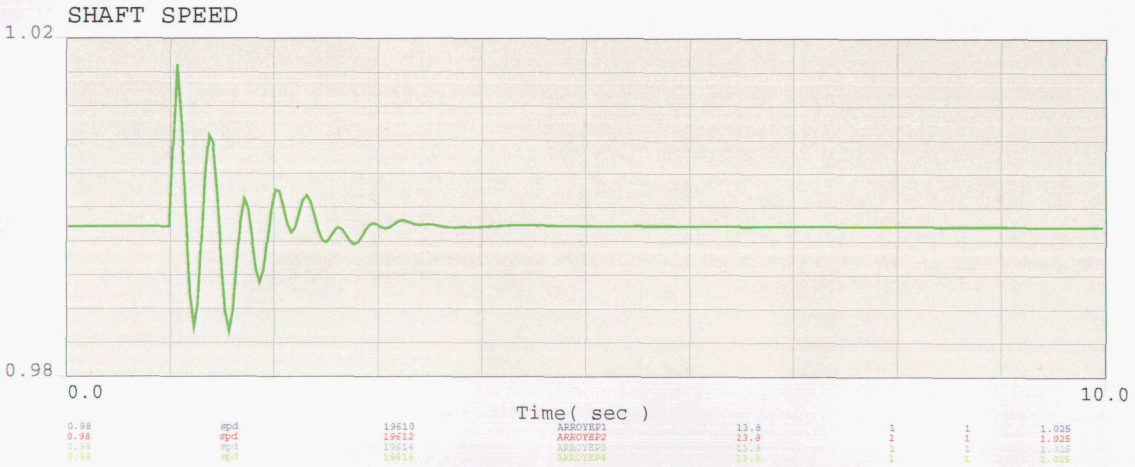

2008 HEAVY AUTUMN, NORTHERN ARIZONA ENERGY PROJECT, POST-PROJECT - UNS Load Increased
CASE: 08ha_pst_LD-rev1.sav
EOR=9300MW, Minimum WAPA-DSW Generation Modeled.
Mohave Off-Line.
Modeled Northern Arizona Energy Project - 180 MW Net

NORTHERN ARIZONA ENERGY PROJECT - TRANSIENT STABILITY PLOTS - PAGE 1

BUS VOLTAGE (1)

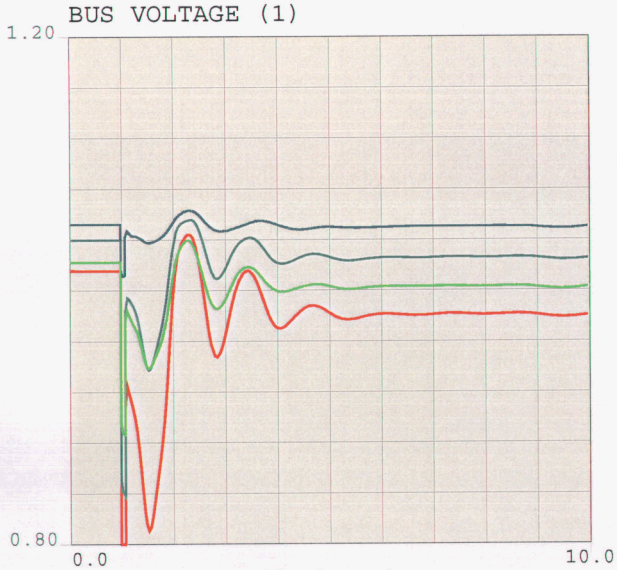

0.8	vbus	19038	MEAD	500.0	1	1	1.2
0.8	vbus	19315	PEACOCK	345.0	1	1	1.2
0.8	vbus	19053	LIBERTY	345.0	1	1	1.2
0.8	vbus	19037	MEAD	345.0	1	1	1.2

BUS VOLTAGE (2)

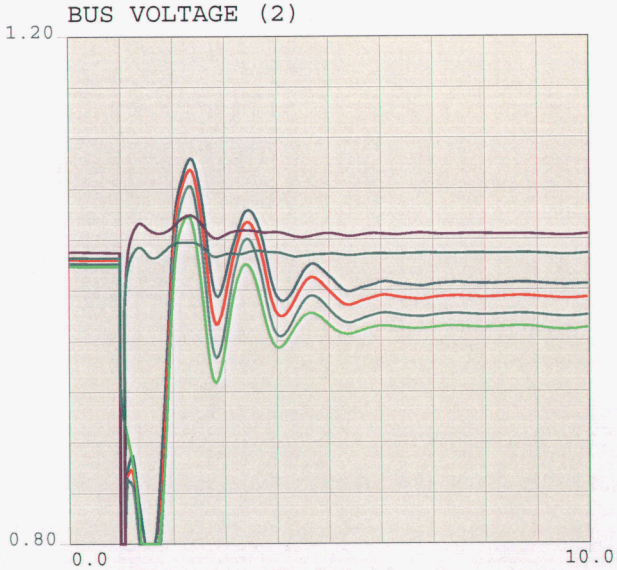

0.8	vbul	19310	GRIFFITH	230.0	1	1	1.2
0.8	vbul	19056	MCCONICO	230.0	1	1	1.2
0.8	vbul	19072	HILLTOP	230.0	1	1	1.2
0.8	vbus	19314	PEACOCK	230.0	1	1	1.2
0.8	vbul	19022	DAVIS	230.0	1	1	1.2
0.8	vbus	19042	PARKER	230.0	1	1	1.2

BUS FREQUENCY (1)

59.6	fbus	19038	MEAD	500.0	1	1	60.4
59.6	fbus	19037	MEAD	345.0	1	1	60.4
59.6	fbus	19315	PEACOCK	345.0	1	1	60.4
59.6	fbus	19053	LIBERTY	345.0	1	1	60.4

BUS FREQUENCY (2)

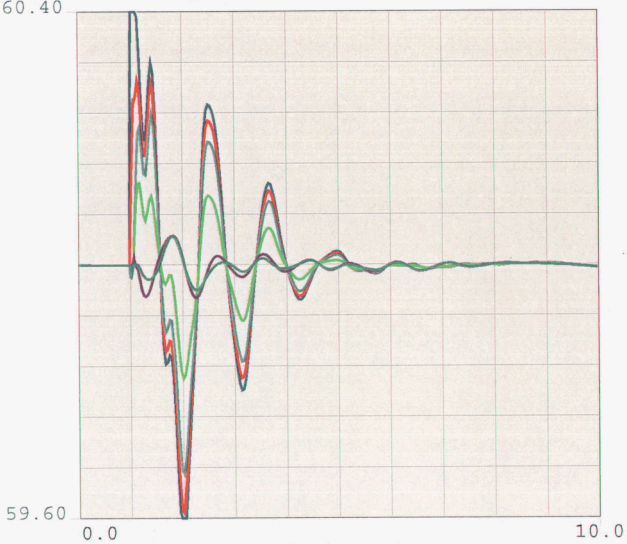

59.6	fbul	19310	GRIFFITH	230.0	1	1	60.4
59.6	fbul	19056	MCCONICO	230.0	1	1	60.4
59.6	fbul	19072	HILLTOP	230.0	1	1	60.4
59.6	fbus	19314	PEACOCK	230.0	1	1	60.4
59.6	fbul	19022	DAVIS	230.0	1	1	60.4
59.6	fbus	19042	PARKER	230.0	1	1	60.4

2008 HEAVY AUTUMN, NORTHERN ARIZONA ENERGY PROJECT, POST-PROJECT - Area Interchange
CASE: 08ha_pst_maxAI-rev1.sav
EOR=9300MW, Maximum WAPA-DSW Generation Modeled.
Mohave Off-line.
Modeled Northern Arizona Energy Project - 180 MW Net

08ha_pst_maxAI_GRPK_McConnico-Davis-230-slo.chf

c:\upslf16\mypslf

Thu Jul 19 16:49:15 2007

NORTHERN ARIZONA ENERGY PROJECT - TRANSIENT STABILITY PLOTS - PAGE 2

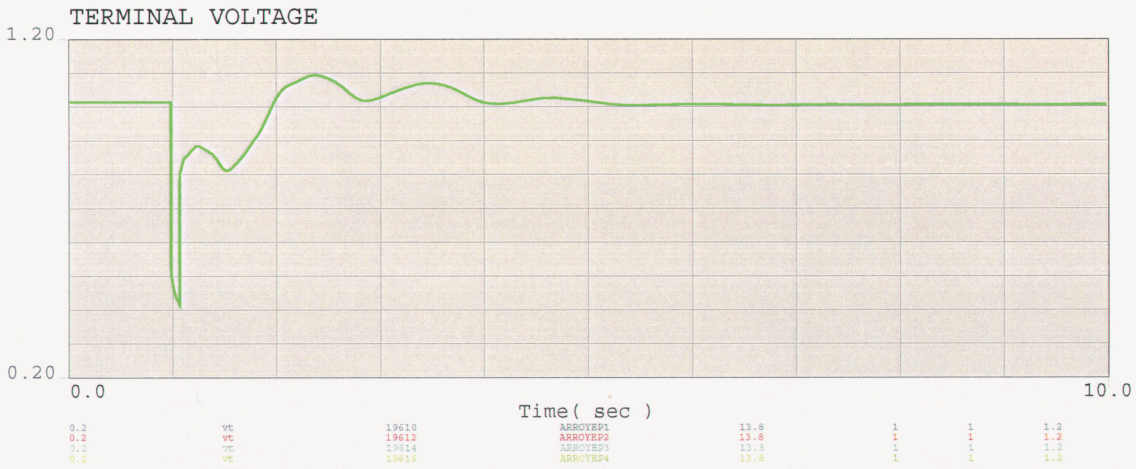

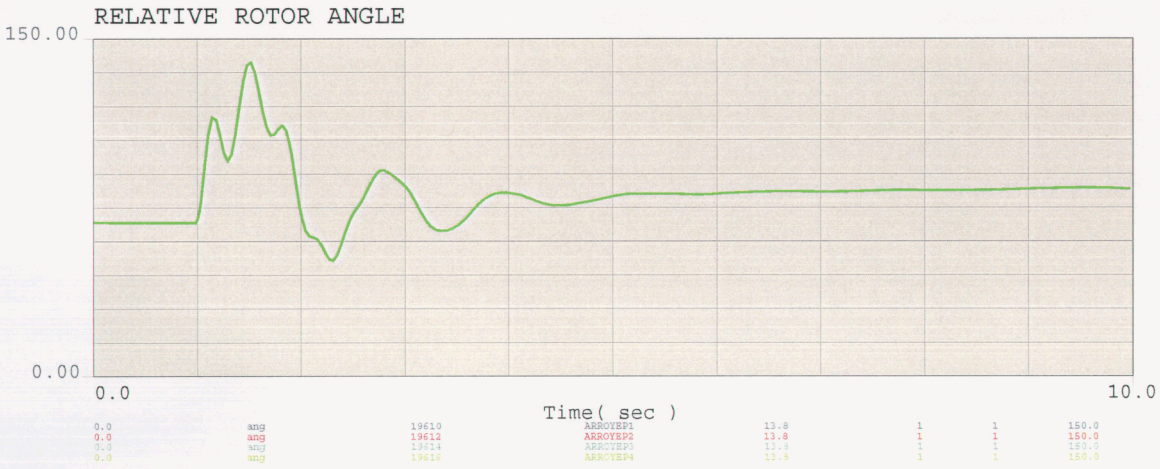

2008 HEAVY AUTUMN, NORTHERN ARIZONA ENERGY PROJECT, POST-PROJECT - Area Interchange
CASE: 08ha_pst_maxAI-rev1.sav
EOR=9300MW, Maximum WAPA-DSW Generation Modeled.
Mohave Off-line.
Modeled Northern Arizona Energy Project - 180 MW Net

08ha_pst_maxAI_GRPK_McConnico-Davis-230-slo.chf

c:\upslf16\mypslf

Thu Jul 19 16:49:15 2007

NORTHERN ARIZONA ENERGY PROJECT - TRANSIENT STABILITY PLOTS - PAGE 1

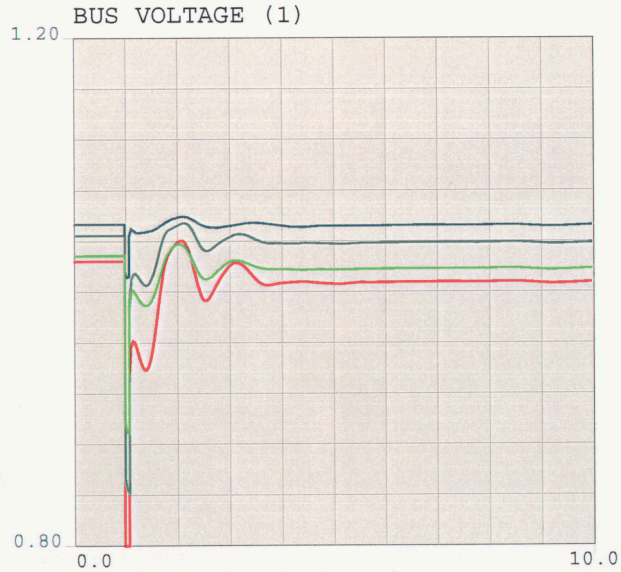

0.8	vbus	19038	MEAD	500.0	1	1	1.2
0.8	vbus	19315	PEACOCK	345.0	1	1	1.2
0.8	vbus	19053	LIBERTY	345.0	1	1	1.2
0.8	vbus	19037	MEAD	345.0	1	1	1.2

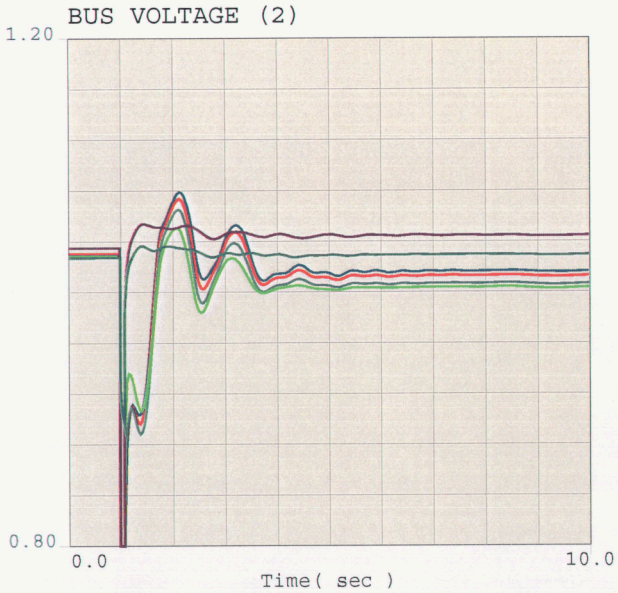

0.8	vbul	19310	GRIFFITH	230.0	1	1	1.2
0.8	vbul	19056	MCCONICO	230.0	1	1	1.2
0.8	vbul	19072	HILLTOP	230.0	1	1	1.2
0.8	vbus	19314	PEACOCK	230.0	1	1	1.2
0.8	vbul	19022	DAVIS	230.0	1	1	1.2
0.8	vbus	19042	PARKER	230.0	1	1	1.2

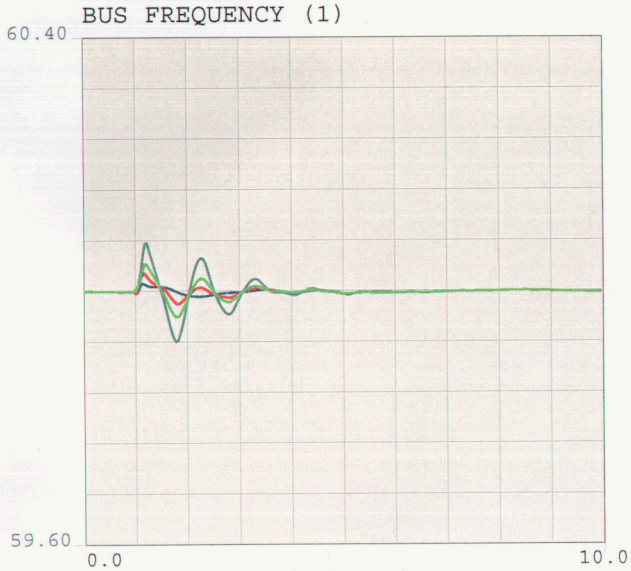

59.6	fbus	19038	MEAD	500.0	1	1	60.4
59.6	fbus	19037	MEAD	345.0	1	1	60.4
59.6	fbus	19315	PEACOCK	345.0	1	1	60.4
59.6	fbus	19053	LIBERTY	345.0	1	1	60.4

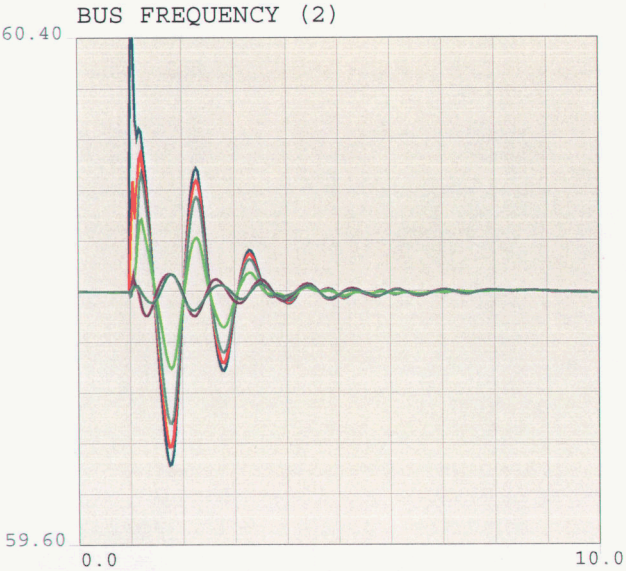

59.6	fbul	19310	GRIFFITH	230.0	1	1	60.4
59.6	fbul	19056	MCCONICO	230.0	1	1	60.4
59.6	fbul	19072	HILLTOP	230.0	1	1	60.4
59.6	fbus	19314	PEACOCK	230.0	1	1	60.4
59.6	fbul	19022	DAVIS	230.0	1	1	60.4
59.6	fbus	19042	PARKER	230.0	1	1	60.4

2008 HEAVY AUTUMN, NORTHERN ARIZONA ENERGY PROJECT, POST-PROJECT - Area Interchange
CASE: 08ha_pst_maxAI-rev1.sav
EOR=9300MW, Maximum WAPA-DSW Generation Modeled.
Mohave Off-line.
Modeled Northern Arizona Energy Project - 180 MW Net

08ha_pst_maxAI-GRPK-reduced_McConnico-Davis-230-slo.chf

c:\upslf16\mypslf

Thu Jul 19 16:49:20 2007

TERMINAL VOLTAGE

RELATIVE ROTOR ANGLE

SHAFT SPEED

2008 HEAVY AUTUMN, NORTHERN ARIZONA ENERGY PROJECT, POST-PROJECT - Area Interchange
CASE: 08ha_pst_maxAI-rev1.sav
EOR=9300MW, Maximum WAPA-DSW Generation Modeled.
Mohave Off-line.
Modeled Northern Arizona Energy Project - 180 MW Net

NORTHERN ARIZONA ENERGY PROJECT - TRANSIENT STABILITY PLOTS - PAGE 1

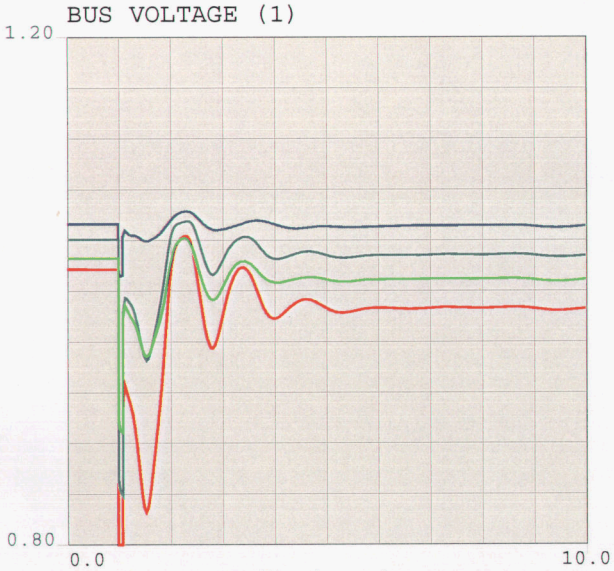

0.8	vbus	19038	MEAD	500.0	1	1	1.2
0.8	vbus	19315	PEACOCK	345.0	1	1	1.2
0.8	vbus	19053	LIBERTY	345.0	1	1	1.2
0.8	vbus	19037	MEAD	345.0	1	1	1.2

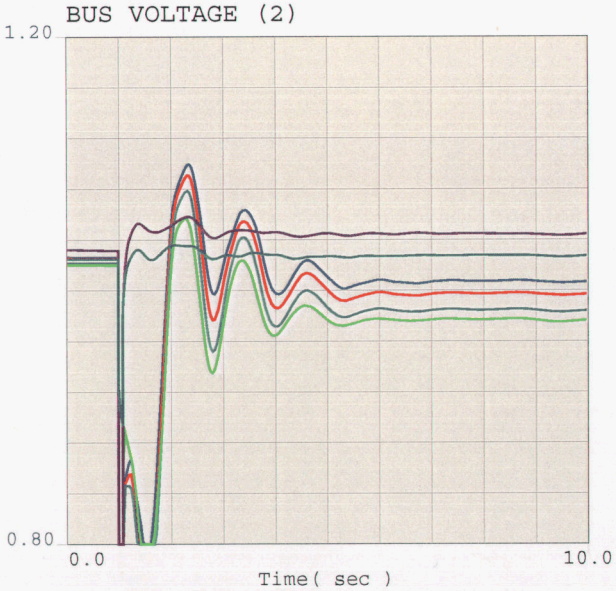

0.8	vbul	19310	GRIFFITH	230.0	1	1	1.2
0.8	vbul	19056	MCCONICO	230.0	1	1	1.2
0.8	vbul	19072	HILLTOP	230.0	1	1	1.2
0.8	vbus	19314	PEACOCK	230.0	1	1	1.2
0.8	vbul	19022	DAVIS	230.0	1	1	1.2
0.8	vbus	19042	PARKER	230.0	1	1	1.2

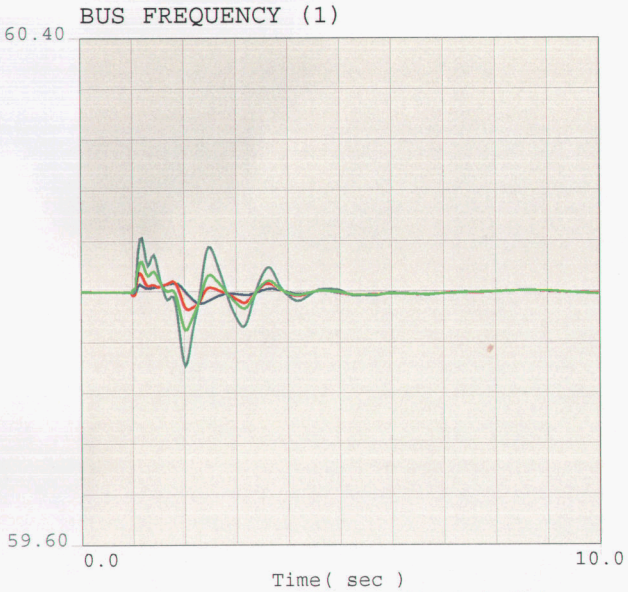

59.6	fbus	19038	MEAD	500.0	1	1	60.4
59.6	fbus	19037	MEAD	345.0	1	1	60.4
59.6	fbus	19315	PEACOCK	345.0	1	1	60.4
59.6	fbus	19053	LIBERTY	345.0	1	1	60.4

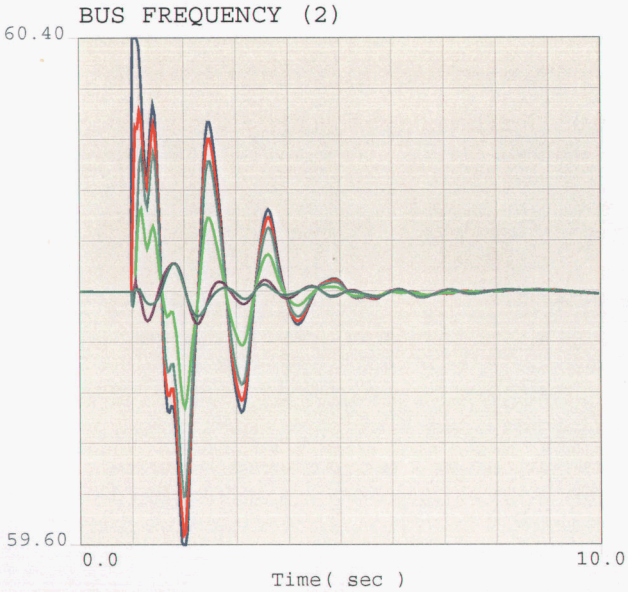

59.6	fbul	19310	GRIFFITH	230.0	1	1	60.4
59.6	fbul	19056	MCCONICO	230.0	1	1	60.4
59.6	fbul	19072	HILLTOP	230.0	1	1	60.4
59.6	fbus	19314	PEACOCK	230.0	1	1	60.4
59.6	fbul	19022	DAVIS	230.0	1	1	60.4
59.6	fbus	19042	PARKER	230.0	1	1	60.4

2008 HEAVY AUTUMN, NORTHERN ARIZONA ENERGY PROJECT, POST-PROJECT - UNS Load Increased
CASE: 08ha_pst_maxLD-rev1.sav
EOR=9300MW, Maximum WAPA-DSW Generation Modeled.
Mohave Off-line.
Modeled Northern Arizona Energy Project - 180 MW Net

08ha_pst_maxLD_GRPK_McConnico-Davis-230-slo.chf

c:\upslf16\mypslf

Thu Jul 19 16:49:27 2007

TERMINAL VOLTAGE

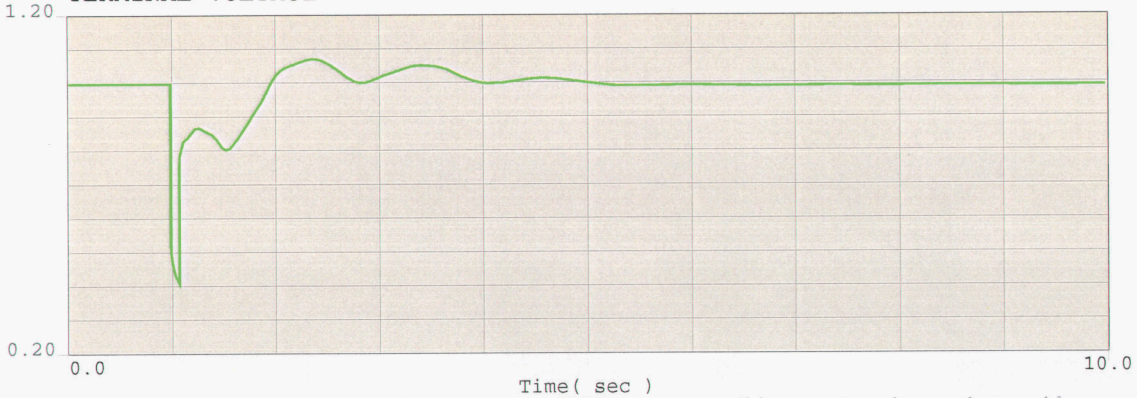

0.2	vt	19610	ARROYEP1	13.8	1	1	1.2
0.2	vt	19612	ARROYEP2	13.8	1	1	1.2
0.2	vt	19614	ARROYEP3	13.8	1	1	1.2
0.2	vt	19616	ARROYEP4	13.8	1	1	1.2

RELATIVE ROTOR ANGLE

0.0	ang	19610	ARROYEP1	13.8	1	1	150.0
0.0	ang	19612	ARROYEP2	13.8	1	1	150.0
0.0	ang	19614	ARROYEP3	13.8	1	1	150.0
0.0	ang	19616	ARROYEP4	13.8	1	1	150.0

SHAFT SPEED

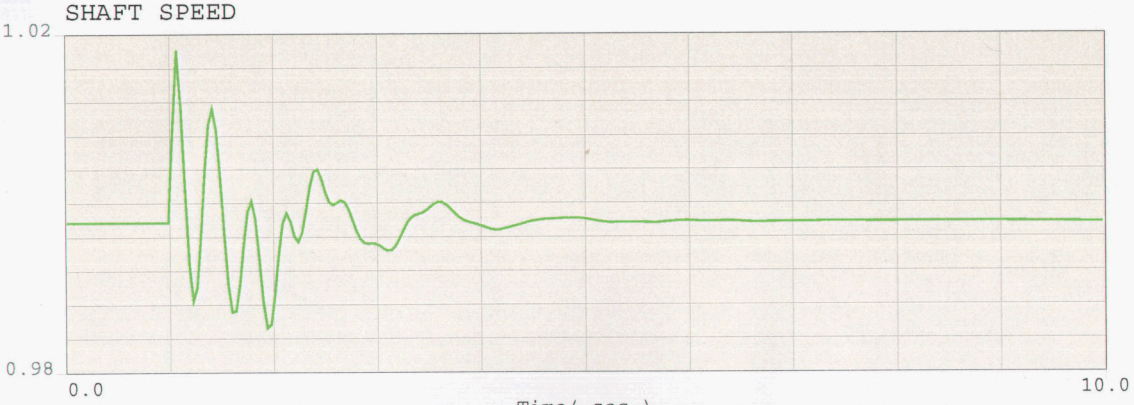

0.98	spd	19610	ARROYEP1	13.8	1	1	1.025
0.98	spd	19612	ARROYEP2	13.8	1	1	1.025
0.98	spd	19614	ARROYEP3	13.8	1	1	1.025
0.98	spd	19616	ARROYEP4	13.8	1	1	1.025

2008 HEAVY AUTUMN, NORTHERN ARIZONA ENERGY PROJECT, POST-PROJECT - UNS Load Increased
CASE: 08ha_pst_maxLD-rev1.sav
EOR=9300MW, Maximum WAPA-DSW Generation Modeled.
Mohave Off-line.
Modeled Northern Arizona Energy Project - 180 MW Net

NORTHERN ARIZONA ENERGY PROJECT - TRANSIENT STABILITY PLOTS - PAGE 1

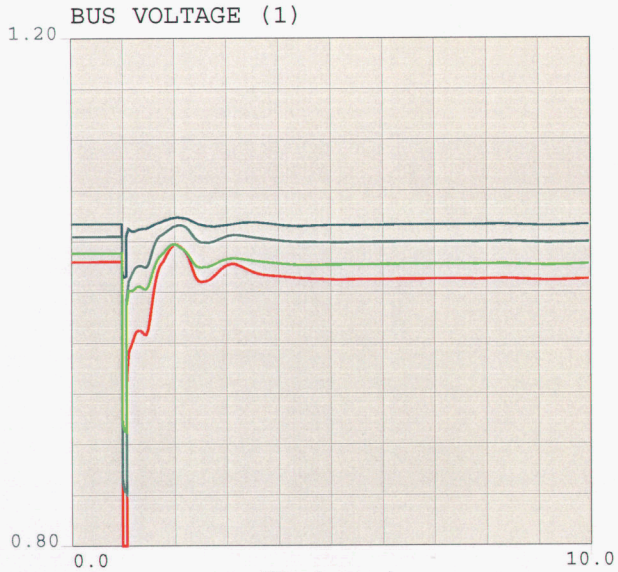

0.8	vbus	19038	MEAD	500.0	1	1	1.2
0.8	vbus	19315	PEACOCK	345.0	1	1	1.2
0.8	vbus	19053	LIBERTY	345.0	1	1	1.2
0.8	vbus	19037	MEAD	345.0	1	1	1.2

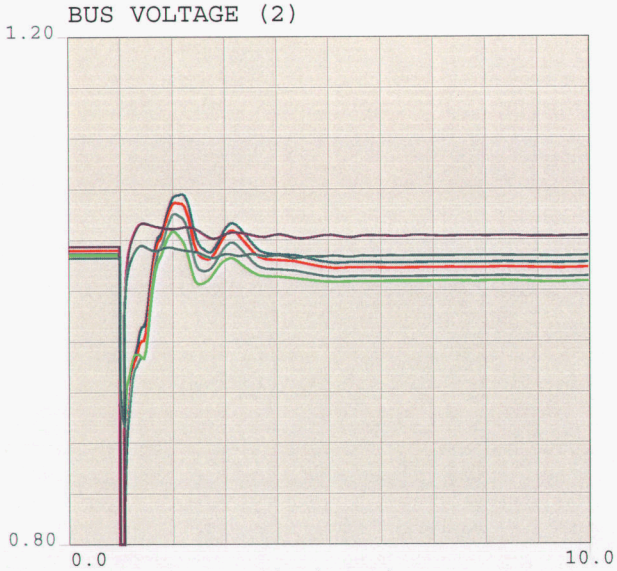

0.8	vbul	19310	GRIFFITH	230.0	1	1	1.2
0.8	vbul	19056	MCCONICO	230.0	1	1	1.2
0.8	vbul	19072	HILLTOP	230.0	1	1	1.2
0.8	vbus	19314	PEACOCK	230.0	1	1	1.2
0.8	vbul	19022	DAVIS	230.0	1	1	1.2
0.8	vbus	19042	PARKER	230.0	1	1	1.2

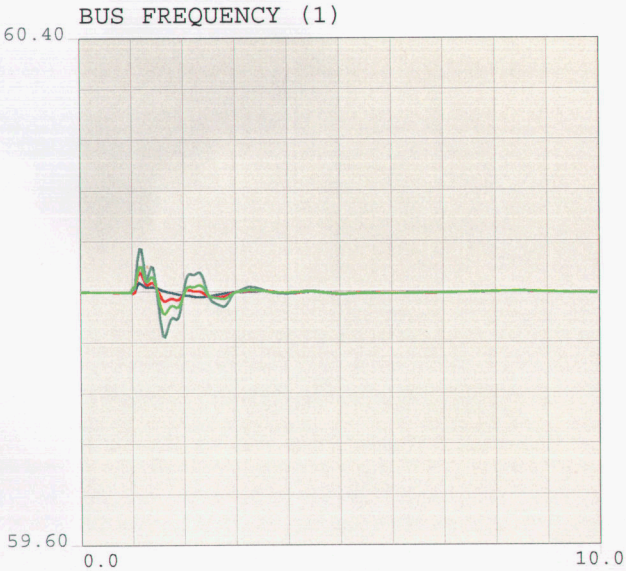

59.6	fbus	19038	MEAD	500.0	1	1	60.4
59.6	fbus	19037	MEAD	345.0	1	1	60.4
59.6	fbus	19315	PEACOCK	345.0	1	1	60.4
59.6	fbus	19053	LIBERTY	345.0	1	1	60.4

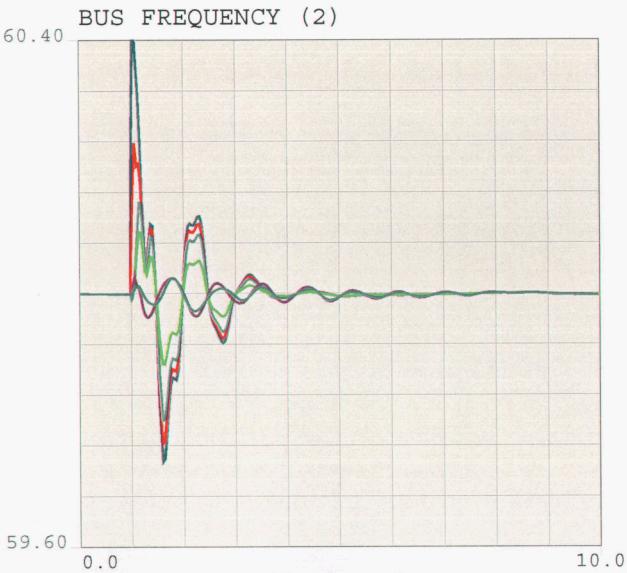

59.6	fbul	19310	GRIFFITH	230.0	1	1	60.4
59.6	fbul	19056	MCCONICO	230.0	1	1	60.4
59.6	fbul	19072	HILLTOP	230.0	1	1	60.4
59.6	fbus	19314	PEACOCK	230.0	1	1	60.4
59.6	fbul	19022	DAVIS	230.0	1	1	60.4
59.6	fbus	19042	PARKER	230.0	1	1	60.4

2008 HEAVY AUTUMN, NORTHERN ARIZONA ENERGY PROJECT, POST-PROJECT - UNS Load Increased
CASE: 08ha_pst_maxLD-rev1.sav
EOR=9300MW, Maximum WAPA-DSW Generation Modeled.
Mohave Off-line.
Modeled Northern Arizona Energy Project - 180 MW Net

08ha_pst_maxLD-GRPK-reduced_McConnico-Davis-230-slo.chf

c:\upslf16\mypslf

Thu Jul 19 16:49:34 2007

TERMINAL VOLTAGE

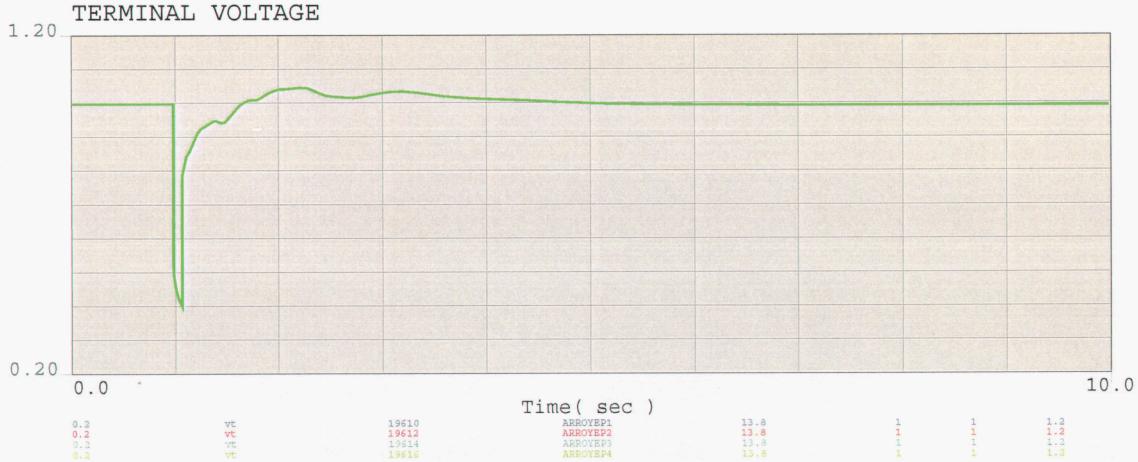

RELATIVE ROTOR ANGLE

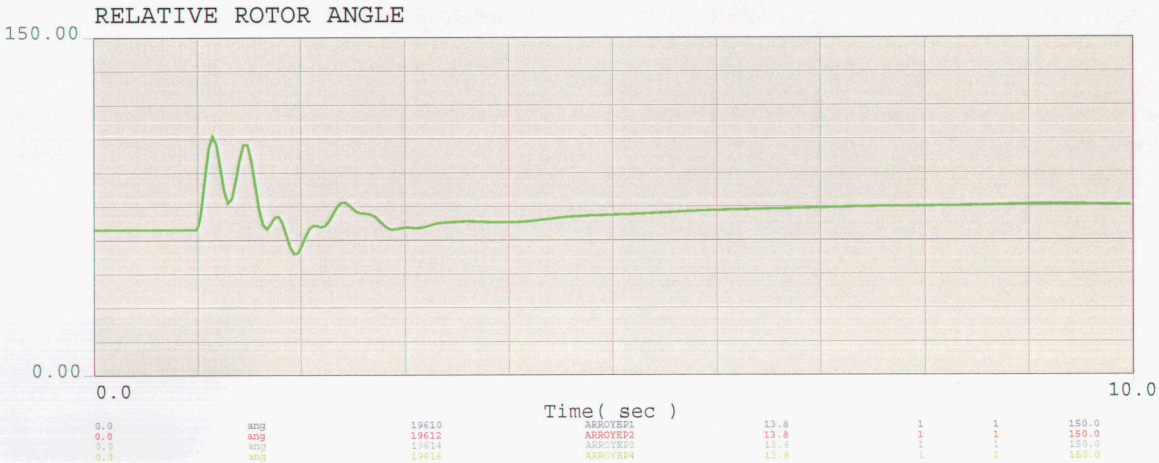

SHAFT SPEED

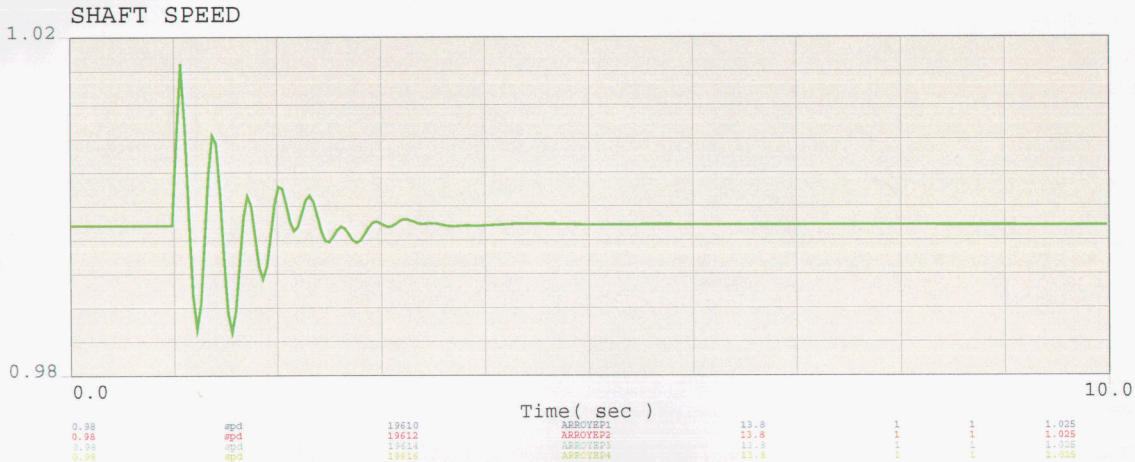

2008 HEAVY AUTUMN, NORTHERN ARIZONA ENERGY PROJECT, POST-PROJECT - UNS Load Increased
CASE: 08ha_pst_maxLD-rev1.sav
EOR=9300MW, Maximum WAPA-DSW Generation Modeled.
Mohave Off-line.
Modeled Northern Arizona Energy Project - 180 MW Net

2008 HEAVY AUTUMN – LIBERTY PHASE-SHIFT TRANSFORMER BY-PASSED

NORTHERN ARIZONA ENERGY PROJECT - TRANSIENT STABILITY PLOTS - PAGE 1

BUS VOLTAGE (1)

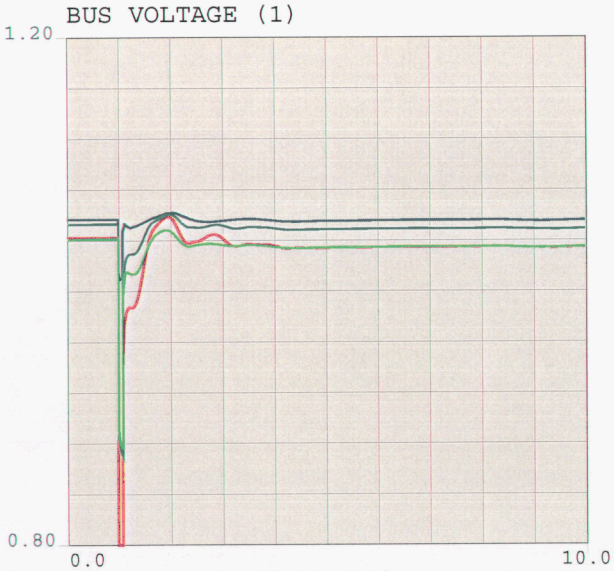

0.8	vbus	19038	MEAD	500.0	1	1	1.2
0.8	vbus	19315	PEACOCK	345.0	1	1	1.2
0.8	vbus	19053	LIBERTY	345.0	1	1	1.2
0.8	vbus	19037	MEAD	345.0	1	1	1.2

BUS VOLTAGE (2)

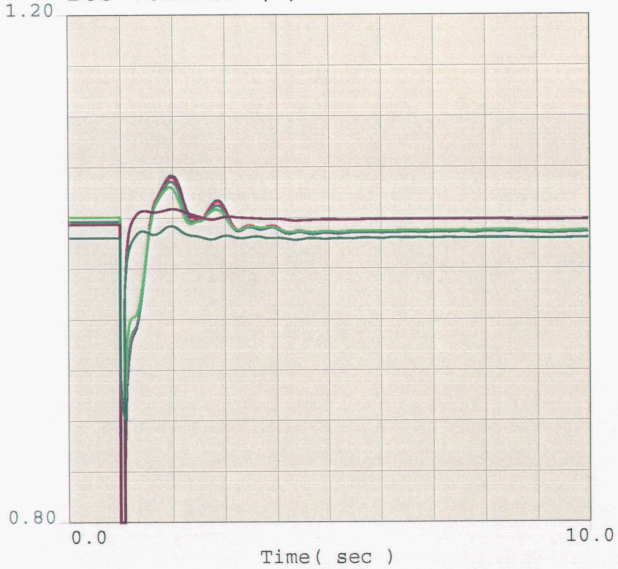

0.8	vbul	19310	GRIFFITH	230.0	1	1	1.2
0.8	vbul	19056	MCCONICO	230.0	1	1	1.2
0.8	vbul	19072	HILLTOP	230.0	1	1	1.2
0.8	vbus	19314	PEACOCK	230.0	1	1	1.2
0.8	vbul	19022	DAVIS	230.0	1	1	1.2
0.8	vbus	19042	PARKER	230.0	1	1	1.2

BUS FREQUENCY (1)

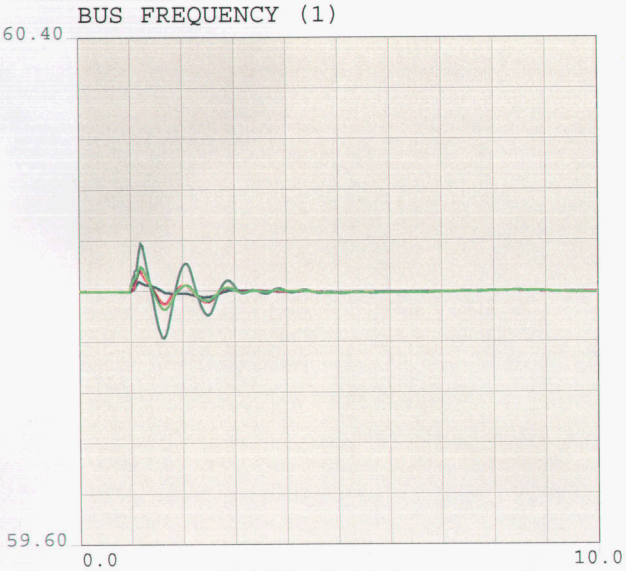

59.6	fbus	19038	MEAD	500.0	1	1	60.4
59.6	fbus	19037	MEAD	345.0	1	1	60.4
59.6	fbus	19315	PEACOCK	345.0	1	1	60.4
59.6	fbus	19053	LIBERTY	345.0	1	1	60.4

BUS FREQUENCY (2)

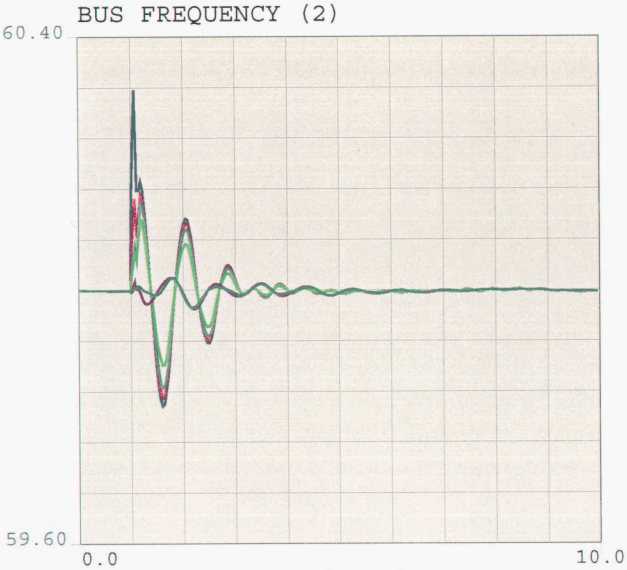

59.6	fbul	19310	GRIFFITH	230.0	1	1	60.4
59.6	fbul	19056	MCCONICO	230.0	1	1	60.4
59.6	fbul	19072	HILLTOP	230.0	1	1	60.4
59.6	fbus	19314	PEACOCK	230.0	1	1	60.4
59.6	fbul	19022	DAVIS	230.0	1	1	60.4
59.6	fbus	19042	PARKER	230.0	1	1	60.4

2008 HEAVY AUTUMN, NORTHERN ARIZONA ENERGY PROJECT, PRE-PROJECT
CASE: 08ha_pre-rev1.sav
EOR=9300MW, Min WAPA-DSW Generation Modeled.
Mohave Off-Line.
Liberty Phase-Shifter Bypassed.

08ha_pre-LibBP-rev1_McConnico-Davis-230-slo.chf

c:\upslf16\mypslf

Thu Jul 19 16:12:12 2007

NORTHERN ARIZONA ENERGY PROJECT - TRANSIENT STABILITY PLOTS - PAGE 1

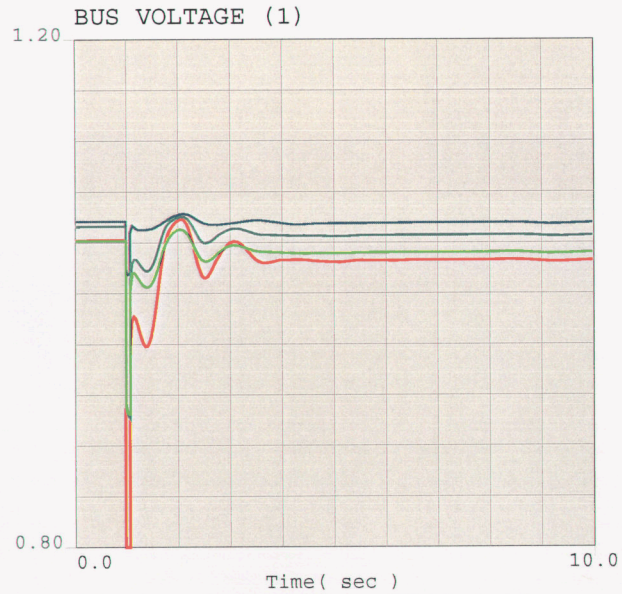

0.8	vbus	19038	MEAD	500.0	1	1	1.2
0.8	vbus	19315	PEACOCK	345.0	1	1	1.2
0.8	vbus	19053	LIBERTY	345.0	1	1	1.2
0.8	vbus	19037	MEAD	345.0	1	1	1.2

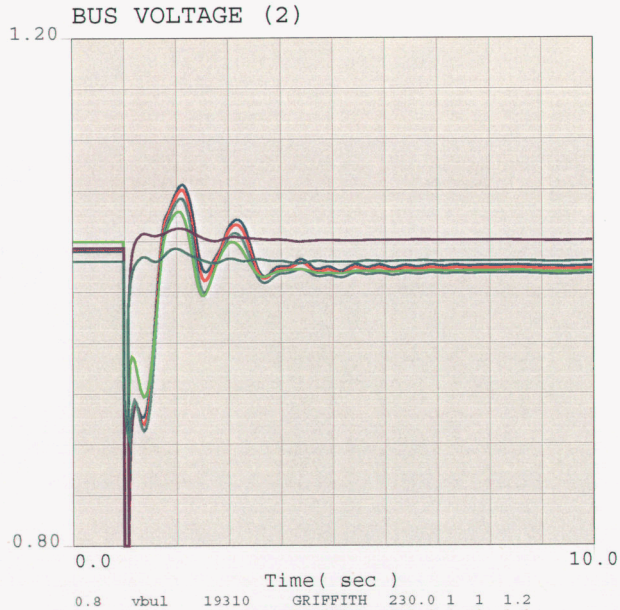

0.8	vbul	19310	GRIFFITH	230.0	1	1	1.2
0.8	vbul	19056	MCCONICO	230.0	1	1	1.2
0.8	vbul	19072	HILLTOP	230.0	1	1	1.2
0.8	vbus	19314	PEACOCK	230.0	1	1	1.2
0.8	vbul	19022	DAVIS	230.0	1	1	1.2
0.8	vbus	19042	PARKER	230.0	1	1	1.2

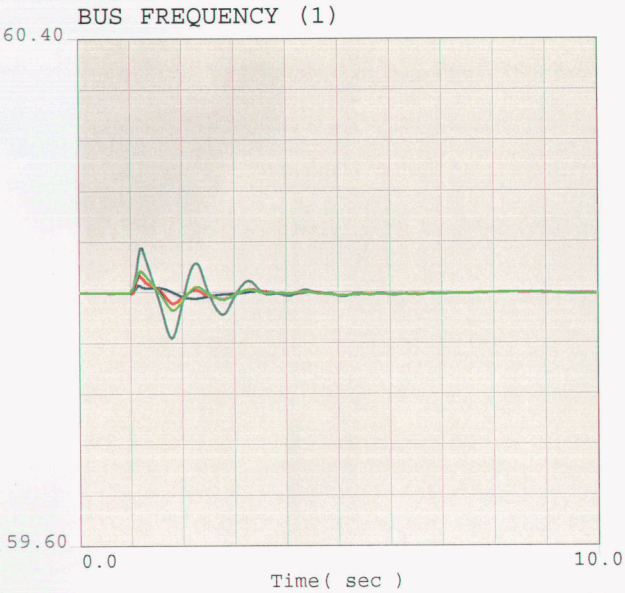

59.6	fbus	19038	MEAD	500.0	1	1	60.4
59.6	fbus	19037	MEAD	345.0	1	1	60.4
59.6	fbus	19315	PEACOCK	345.0	1	1	60.4
59.6	fbus	19053	LIBERTY	345.0	1	1	60.4

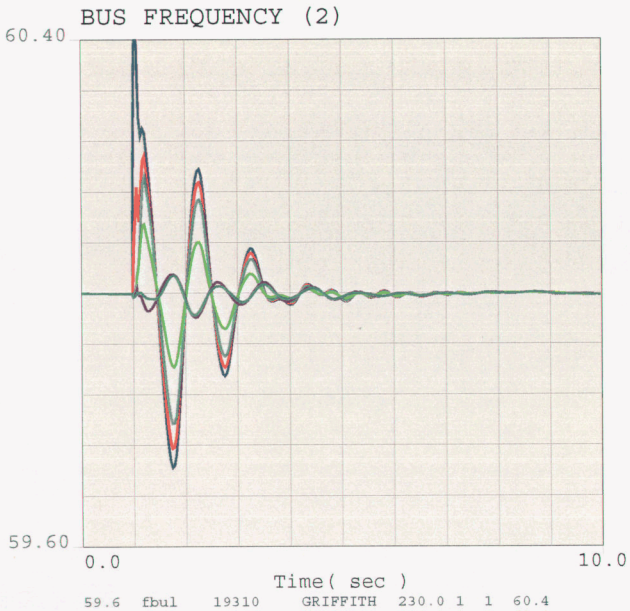

59.6	fbul	19310	GRIFFITH	230.0	1	1	60.4
59.6	fbul	19056	MCCONICO	230.0	1	1	60.4
59.6	fbul	19072	HILLTOP	230.0	1	1	60.4
59.6	fbus	19314	PEACOCK	230.0	1	1	60.4
59.6	fbul	19022	DAVIS	230.0	1	1	60.4
59.6	fbus	19042	PARKER	230.0	1	1	60.4

2008 HEAVY AUTUMN, NORTHERN ARIZONA ENERGY PROJECT, PRE-PROJECT
CASE: 08ha_pre-rev1.sav
EOR=9300MW, Min WAPA-DSW Generation Modeled.
Mohave Off-Line.
Liberty Phase-Shifter Bypassed.

08ha_pre-libbp-GRPK_McConnico-Davis-230-slo.chf

c:\upslf16\mypslf

Thu Jul 19 16:12:18 2007

NORTHERN ARIZONA ENERGY PROJECT - TRANSIENT STABILITY PLOTS - PAGE 1

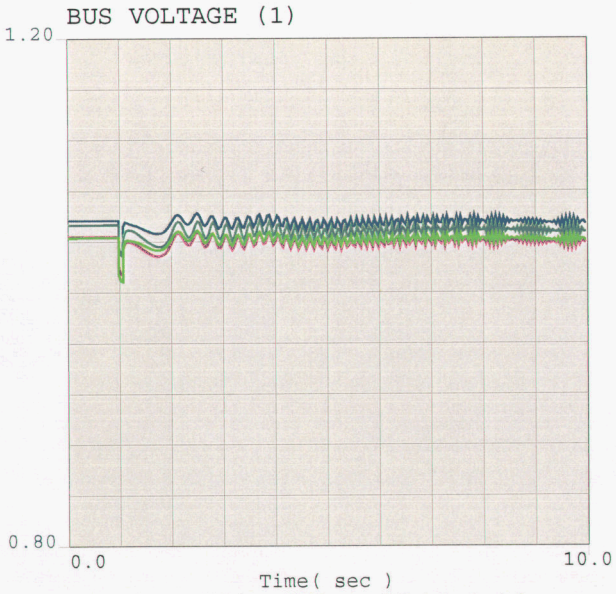

0.8	vbus	19038	MEAD	500.0	1	1	1.2
0.8	vbus	19315	PEACOCK	345.0	1	1	1.2
0.8	vbus	19053	LIBERTY	345.0	1	1	1.2
0.8	vbus	19037	MEAD	345.0	1	1	1.2

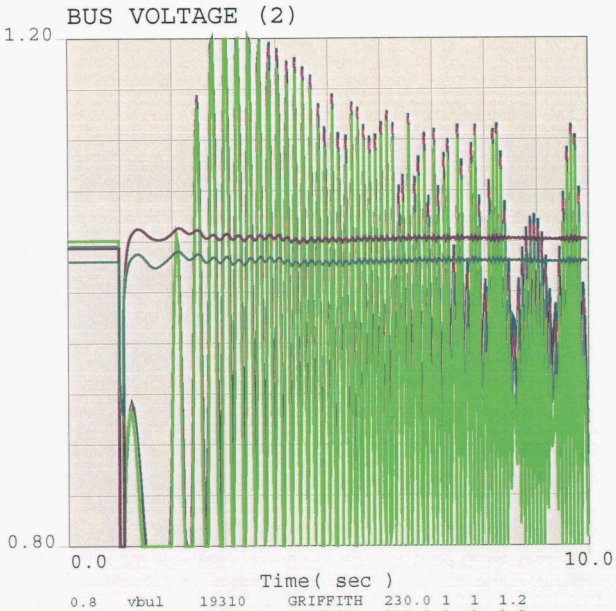

0.8	vbul	19310	GRIFFITH	230.0	1	1	1.2
0.8	vbul	19056	MCCONICO	230.0	1	1	1.2
0.8	vbul	19072	HILLTOP	230.0	1	1	1.2
0.8	vbus	19314	PEACOCK	230.0	1	1	1.2
0.8	vbul	19022	DAVIS	230.0	1	1	1.2
0.8	vbus	19042	PARKER	230.0	1	1	1.2

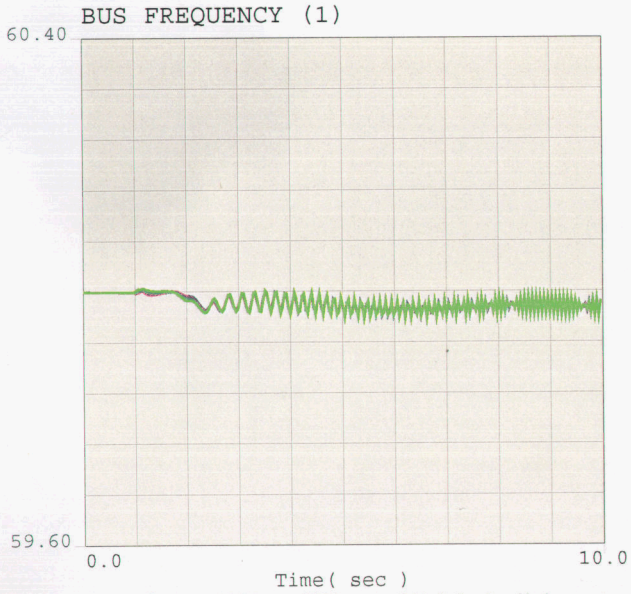

59.6	fbus	19038	MEAD	500.0	1	1	60.4
59.6	fbus	19037	MEAD	345.0	1	1	60.4
59.6	fbus	19315	PEACOCK	345.0	1	1	60.4
59.6	fbus	19053	LIBERTY	345.0	1	1	60.4

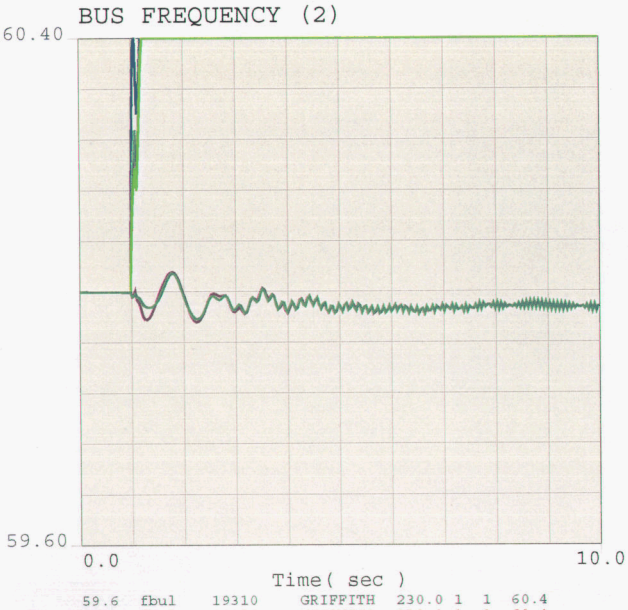

59.6	fbul	19310	GRIFFITH	230.0	1	1	60.4
59.6	fbul	19056	MCCONICO	230.0	1	1	60.4
59.6	fbul	19072	HILLTOP	230.0	1	1	60.4
59.6	fbus	19314	PEACOCK	230.0	1	1	60.4
59.6	fbul	19022	DAVIS	230.0	1	1	60.4
59.6	fbus	19042	PARKER	230.0	1	1	60.4

2008 HEAVY AUTUMN, NORTHERN ARIZONA ENERGY PROJECT, PRE-PROJECT
CASE: 08ha_pre-rev1.sav
EOR=9300MW, Min WAPA-DSW Generation Modeled.
Mohave Off-Line.
Liberty Phase-Shifter Bypassed.

08ha_pre-libbp-PKTran_McConnico-Davis-230-slo.chf

c:\upslf16\mypslf

Thu Jul 19 16:12:25 2007

NORTHERN ARIZONA ENERGY PROJECT - TRANSIENT STABILITY PLOTS - PAGE 1

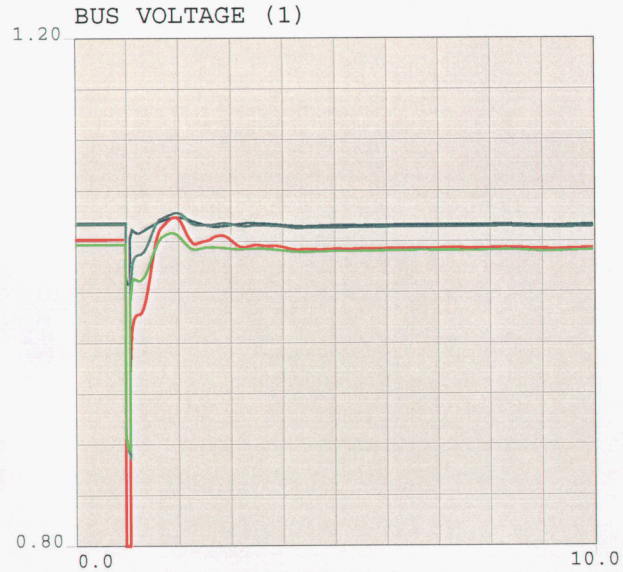

0.8	vbus	19038	MEAD	500.0	1	1	1.2
0.8	vbus	19315	PEACOCK	345.0	1	1	1.2
0.8	vbus	19053	LIBERTY	345.0	1	1	1.2
0.8	vbus	19037	MEAD	345.0	1	1	1.2

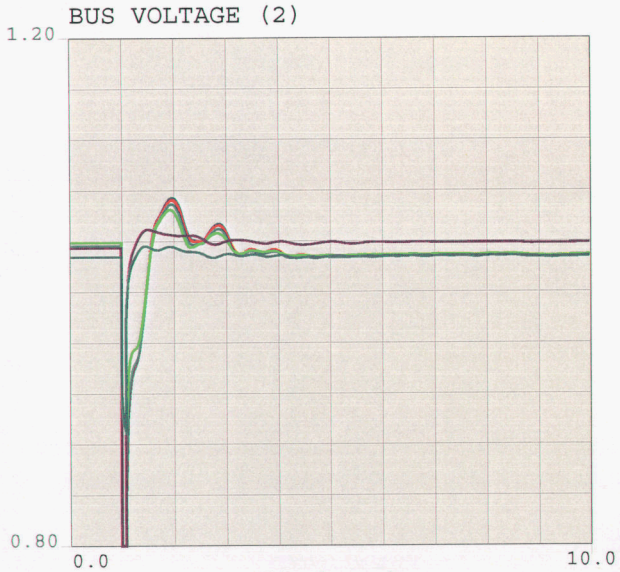

0.8	vbul	19310	GRIFFITH	230.0	1	1	1.2
0.8	vbul	19056	MCCONICO	230.0	1	1	1.2
0.8	vbul	19072	HILLTOP	230.0	1	1	1.2
0.8	vbus	19314	PEACOCK	230.0	1	1	1.2
0.8	vbul	19022	DAVIS	230.0	1	1	1.2
0.8	vbus	19042	PARKER	230.0	1	1	1.2

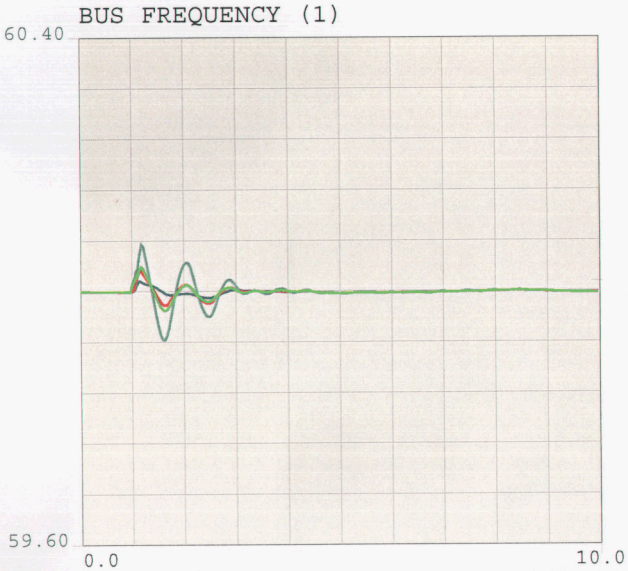

59.6	fbus	19038	MEAD	500.0	1	1	60.4
59.6	fbus	19037	MEAD	345.0	1	1	60.4
59.6	fbus	19315	PEACOCK	345.0	1	1	60.4
59.6	fbus	19053	LIBERTY	345.0	1	1	60.4

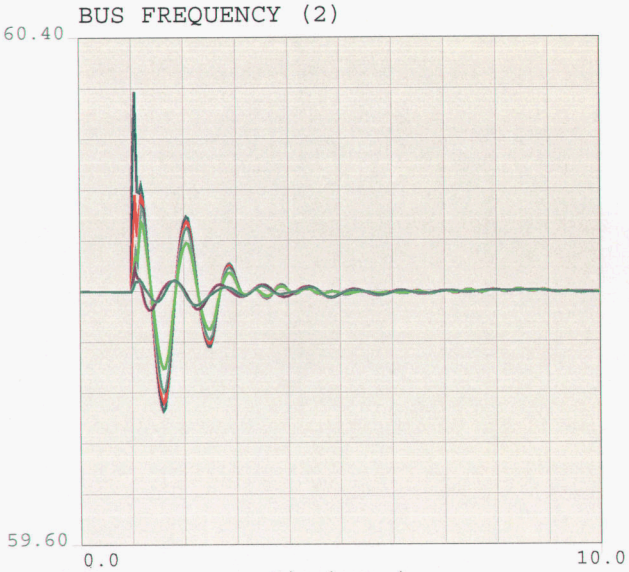

59.6	fbul	19310	GRIFFITH	230.0	1	1	60.4
59.6	fbul	19056	MCCONICO	230.0	1	1	60.4
59.6	fbul	19072	HILLTOP	230.0	1	1	60.4
59.6	fbus	19314	PEACOCK	230.0	1	1	60.4
59.6	fbul	19022	DAVIS	230.0	1	1	60.4
59.6	fbus	19042	PARKER	230.0	1	1	60.4

2008 HEAVY AUTUMN, NORTHERN ARIZONA ENERGY PROJECT, PRE-PROJECT
CASE: 08ha_pre_max-LibBP-rev1.sav
EOR=9300MW, Maximum WAPA-DSW Generation Modeled.
Mohave Off-line, Liberty Phase-Shift Transformer By-Passed.

08ha_pre_max-LibBP-rev1_McConnico-Davis-230-slo.chf

c:\upslf16\mypslf

Thu Jul 19 16:12:57 2007

NORTHERN ARIZONA ENERGY PROJECT - TRANSIENT STABILITY PLOTS - PAGE 1

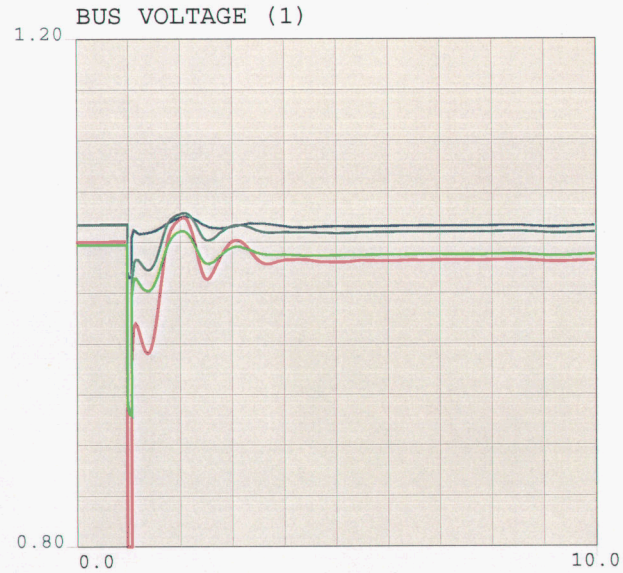

0.8	vbus	19038	MEAD	500.0	1	1	1.2
0.8	vbus	19315	PEACOCK	345.0	1	1	1.2
0.8	vbus	19053	LIBERTY	345.0	1	1	1.2
0.8	vbus	19037	MEAD	345.0	1	1	1.2

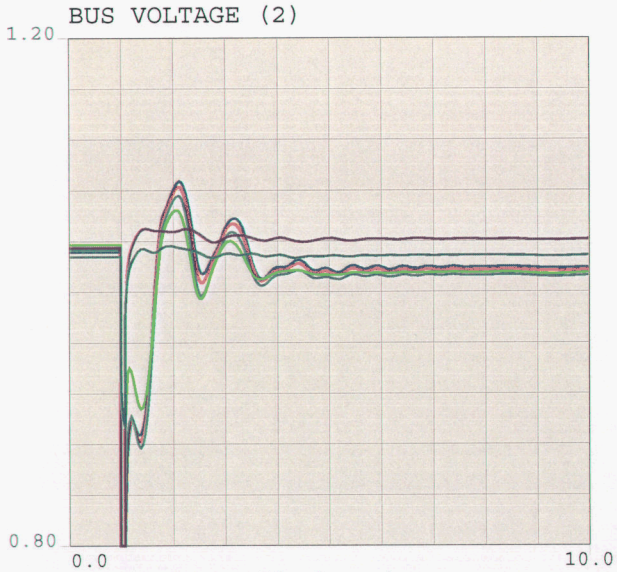

0.8	vbul	19310	GRIFFITH	230.0	1	1	1.2
0.8	vbul	19056	MCCONICO	230.0	1	1	1.2
0.8	vbul	19072	HILLTOP	230.0	1	1	1.2
0.8	vbus	19314	PEACOCK	230.0	1	1	1.2
0.8	vbul	19022	DAVIS	230.0	1	1	1.2
0.8	vbus	19042	PARKER	230.0	1	1	1.2

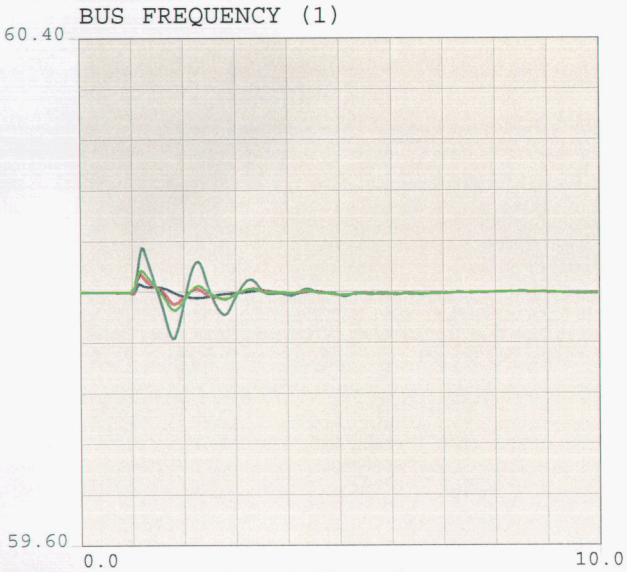

59.6	fbus	19038	MEAD	500.0	1	1	60.4
59.6	fbus	19037	MEAD	345.0	1	1	60.4
59.6	fbus	19315	PEACOCK	345.0	1	1	60.4
59.6	fbus	19053	LIBERTY	345.0	1	1	60.4

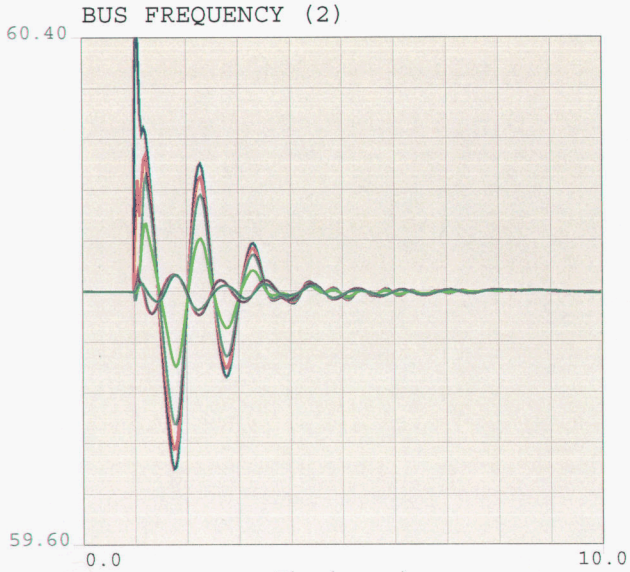

59.6	fbul	19310	GRIFFITH	230.0	1	1	60.4
59.6	fbul	19056	MCCONICO	230.0	1	1	60.4
59.6	fbul	19072	HILLTOP	230.0	1	1	60.4
59.6	fbus	19314	PEACOCK	230.0	1	1	60.4
59.6	fbul	19022	DAVIS	230.0	1	1	60.4
59.6	fbus	19042	PARKER	230.0	1	1	60.4

2008 HEAVY AUTUMN, NORTHERN ARIZONA ENERGY PROJECT, PRE-PROJECT
CASE: 08ha_pre_max-LibBP-rev1.sav
EOR=9300MW, Maximum WAPA-DSW Generation Modeled.
Mohave Off-line, Liberty Phase-Shift Transformer By-Passed.

08ha_pre_max-LIBBP-GRPK_McConnico-Davis-230-slo.chf

c:\upslf16\mypslf

Thu Jul 19 16:13:07 2007

NORTHERN ARIZONA ENERGY PROJECT - TRANSIENT STABILITY PLOTS - PAGE 1

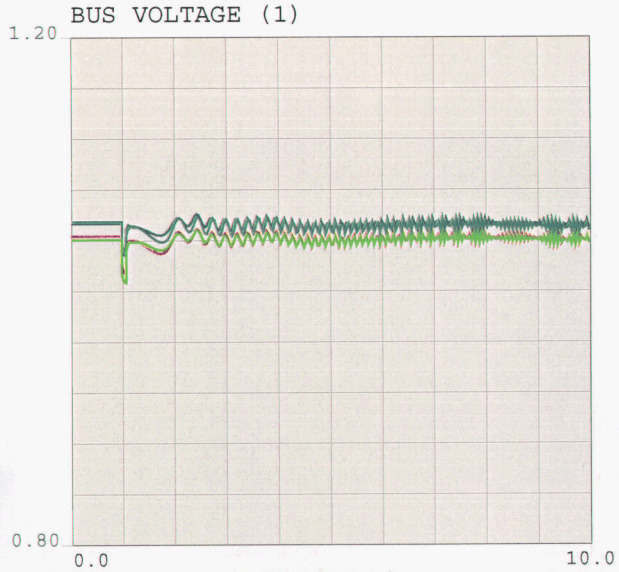

0.8	vbus	19038	MEAD	500.0	1	1	1.2
0.8	vbus	19315	PEACOCK	345.0	1	1	1.2
0.8	vbus	19053	LIBERTY	345.0	1	1	1.2
0.8	vbus	19037	MEAD	345.0	1	1	1.2

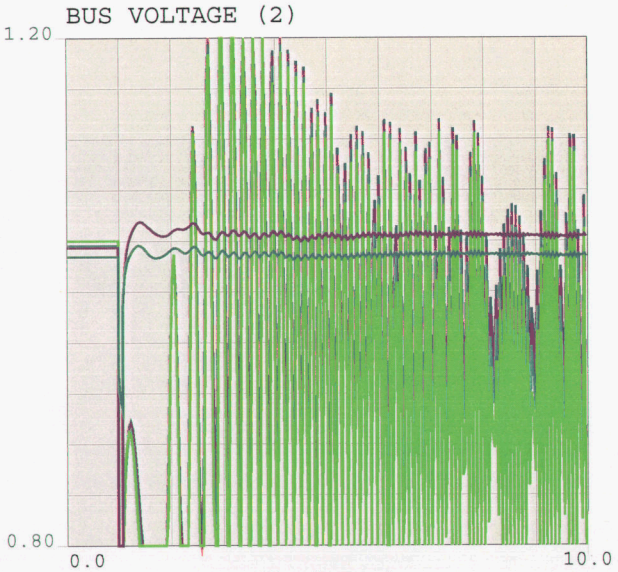

0.8	vbul	19310	GRIFFITH	230.0	1	1	1.2
0.8	vbul	19056	MCCONICO	230.0	1	1	1.2
0.8	vbul	19072	HILLTOP	230.0	1	1	1.2
0.8	vbus	19314	PEACOCK	230.0	1	1	1.2
0.8	vbul	19022	DAVIS	230.0	1	1	1.2
0.8	vbus	19042	PARKER	230.0	1	1	1.2

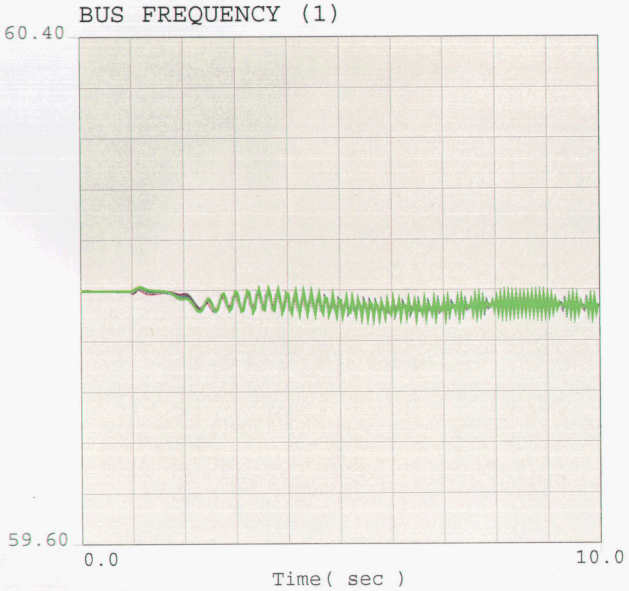

59.6	fbus	19038	MEAD	500.0	1	1	60.4
59.6	fbus	19037	MEAD	345.0	1	1	60.4
59.6	fbus	19315	PEACOCK	345.0	1	1	60.4
59.6	fbus	19053	LIBERTY	345.0	1	1	60.4

59.6	fbul	19310	GRIFFITH	230.0	1	1	60.4
59.6	fbul	19056	MCCONICO	230.0	1	1	60.4
59.6	fbul	19072	HILLTOP	230.0	1	1	60.4
59.6	fbus	19314	PEACOCK	230.0	1	1	60.4
59.6	fbul	19022	DAVIS	230.0	1	1	60.4
59.6	fbus	19042	PARKER	230.0	1	1	60.4

2008 HEAVY AUTUMN, NORTHERN ARIZONA ENERGY PROJECT, PRE-PROJECT
CASE: 08ha_pre_max-LibBP-rev1.sav
EOR=9300MW, Maximum WAPA-DSW Generation Modeled.
Mohave Off-line, Liberty Phase-Shift Transformer By-Passed.

08ha_pre_max-LIBBP-PKTran_McConnico-Davis-230-slo.chf

c:\upslf16\mypslf

Thu Jul 19 16:13:16 2007

NORTHERN ARIZONA ENERGY PROJECT - TRANSIENT STABILITY PLOTS - PAGE 1

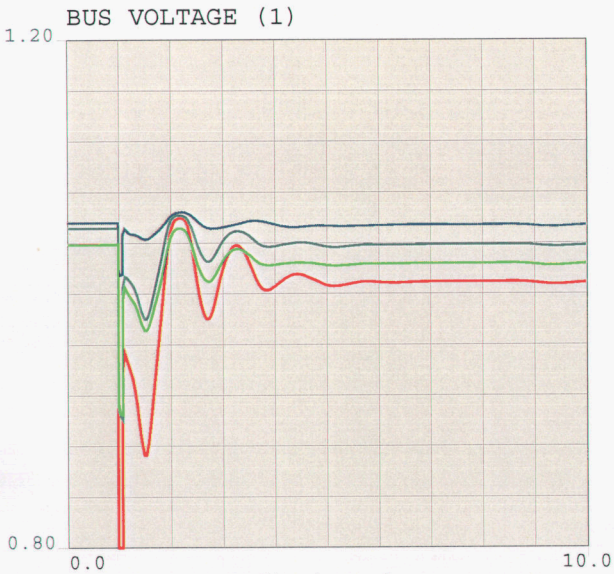

0.8	vbus	19038	MEAD	500.0	1	1	1.2
0.8	vbus	19315	PEACOCK	345.0	1	1	1.2
0.8	vbus	19053	LIBERTY	345.0	1	1	1.2
0.8	vbus	19037	MEAD	345.0	1	1	1.2

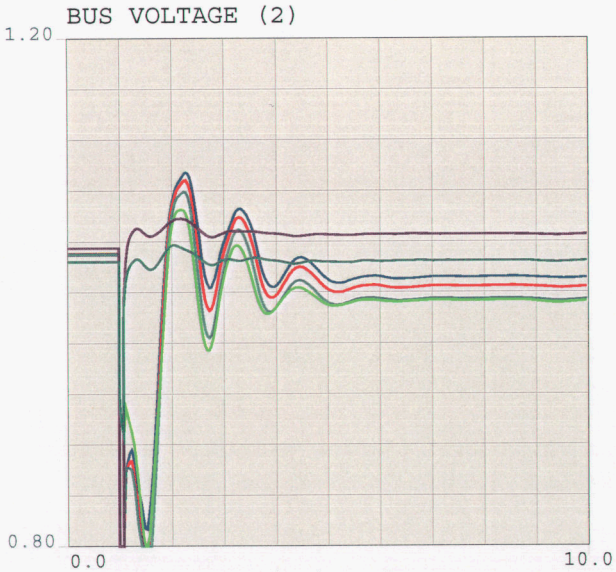

0.8	vbul	19310	GRIFFITH	230.0	1	1	1.2
0.8	vbul	19056	MCCONICO	230.0	1	1	1.2
0.8	vbul	19072	HILLTOP	230.0	1	1	1.2
0.8	vbus	19314	PEACOCK	230.0	1	1	1.2
0.8	vbul	19022	DAVIS	230.0	1	1	1.2
0.8	vbus	19042	PARKER	230.0	1	1	1.2

59.6	fbus	19038	MEAD	500.0	1	1	60.4
59.6	fbus	19037	MEAD	345.0	1	1	60.4
59.6	fbus	19315	PEACOCK	345.0	1	1	60.4
59.6	fbus	19053	LIBERTY	345.0	1	1	60.4

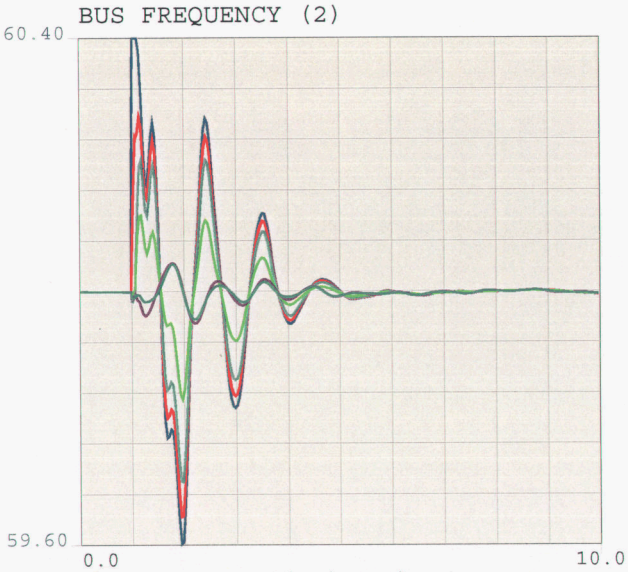

59.6	fbul	19310	GRIFFITH	230.0	1	1	60.4
59.6	fbul	19056	MCCONICO	230.0	1	1	60.4
59.6	fbul	19072	HILLTOP	230.0	1	1	60.4
59.6	fbus	19314	PEACOCK	230.0	1	1	60.4
59.6	fbul	19022	DAVIS	230.0	1	1	60.4
59.6	fbus	19042	PARKER	230.0	1	1	60.4

2008 HEAVY AUTUMN, NORTHERN ARIZONA ENERGY PROJECT, POST-PROJECT - Area Interchange
CASE: 08ha_pst_AI-LibBP-rev1.sav
EOR=9300MW, Minimum WAPA-DSW Generation Modeled.
Mohave Off-line, Liberty Phase-Shift Transformer By-passed.
Modeled Northern Arizona Energy Project - 180 MW Net

08hapst_AI-LibBP_GR-PK_McConnico-Davis-230-slo.chf

c:\upslf16\mypslf

Thu Jul 19 16:19:58 2007

TERMINAL VOLTAGE

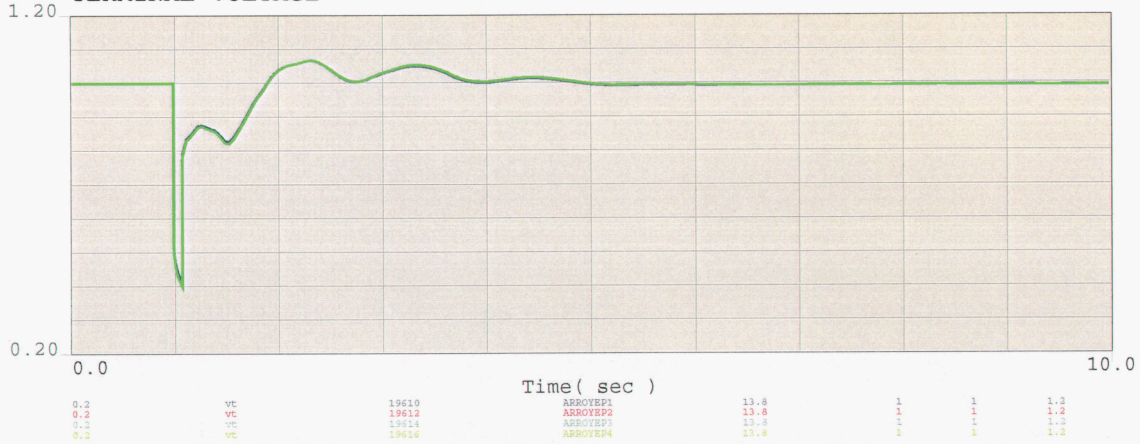

RELATIVE ROTOR ANGLE

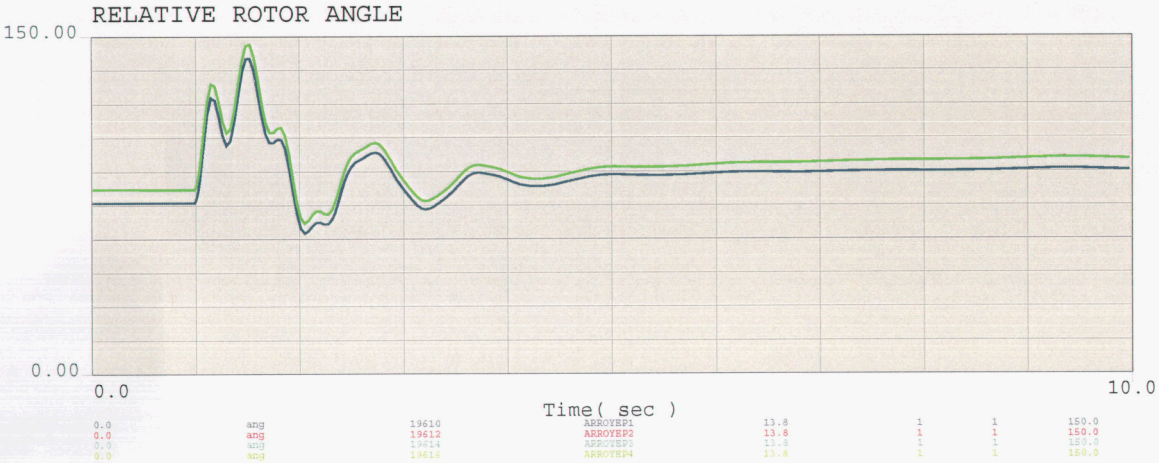

SHAFT SPEED

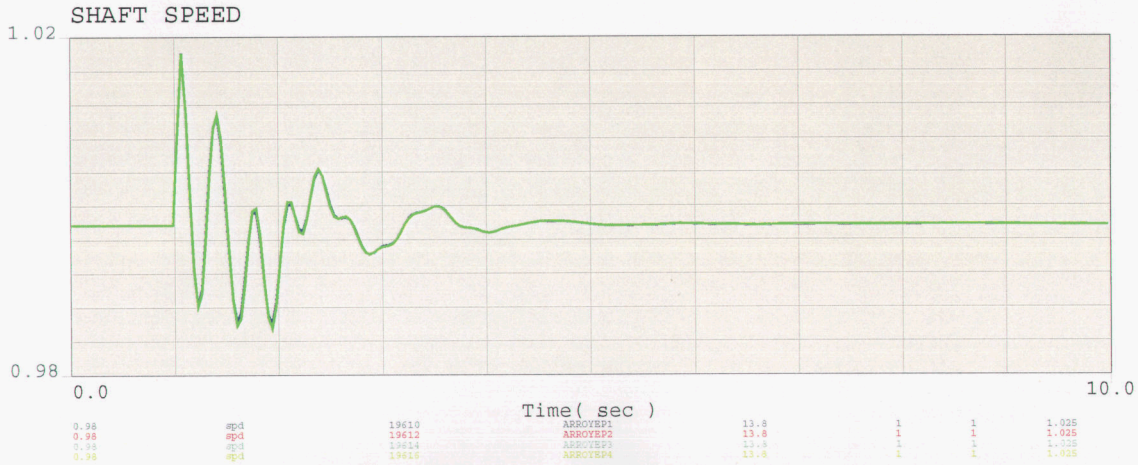

2008 HEAVY AUTUMN, NORTHERN ARIZONA ENERGY PROJECT, POST-PROJECT - Area Interchange
CASE: 08ha_pst_AI-LibBP-rev1.sav
EOR=9300MW, Minimum WAPA-DSW Generation Modeled.
Mohave Off-line, Liberty Phase-Shift Transformer By-passed.
Modeled Northern Arizona Energy Project - 180 MW Net

NORTHERN ARIZONA ENERGY PROJECT - TRANSIENT STABILITY PLOTS - PAGE 1

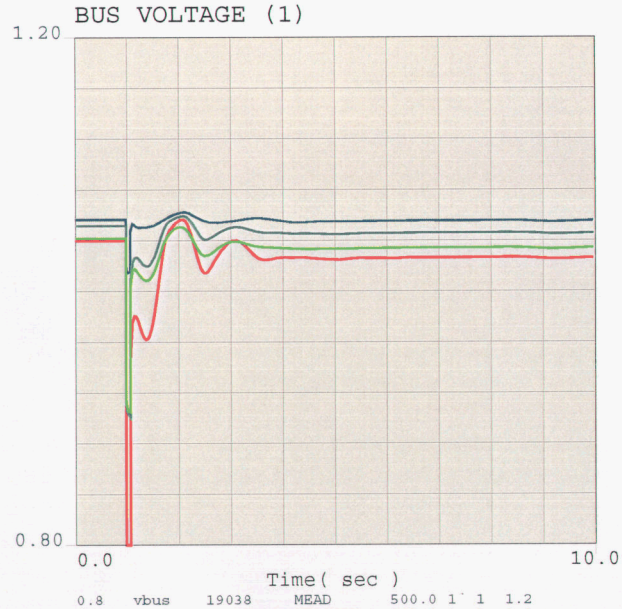

0.8	vbus	19038	MEAD	500.0	1	1	1.2
0.8	vbus	19315	PEACOCK	345.0	1	1	1.2
0.8	vbus	19053	LIBERTY	345.0	1	1	1.2
0.8	vbus	19037	MEAD	345.0	1	1	1.2

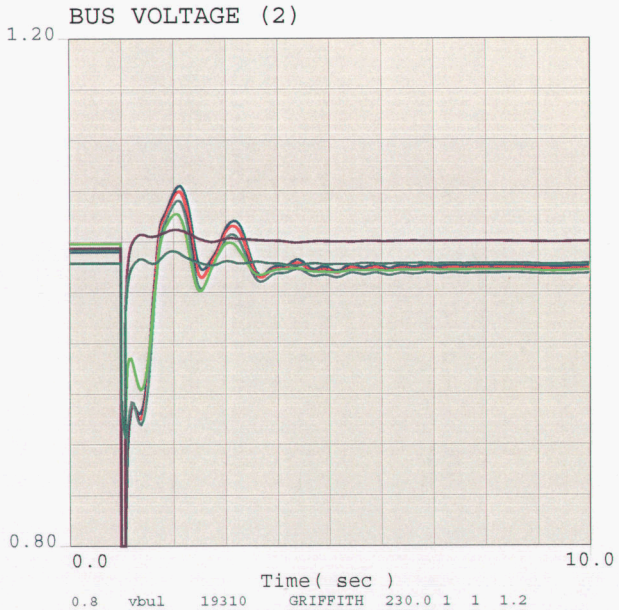

0.8	vbul	19310	GRIFFITH	230.0	1	1	1.2
0.8	vbul	19056	MCCONICO	230.0	1	1	1.2
0.8	vbul	19072	HILLTOP	230.0	1	1	1.2
0.8	vbus	19314	PEACOCK	230.0	1	1	1.2
0.8	vbul	19022	DAVIS	230.0	1	1	1.2
0.8	vbus	19042	PARKER	230.0	1	1	1.2

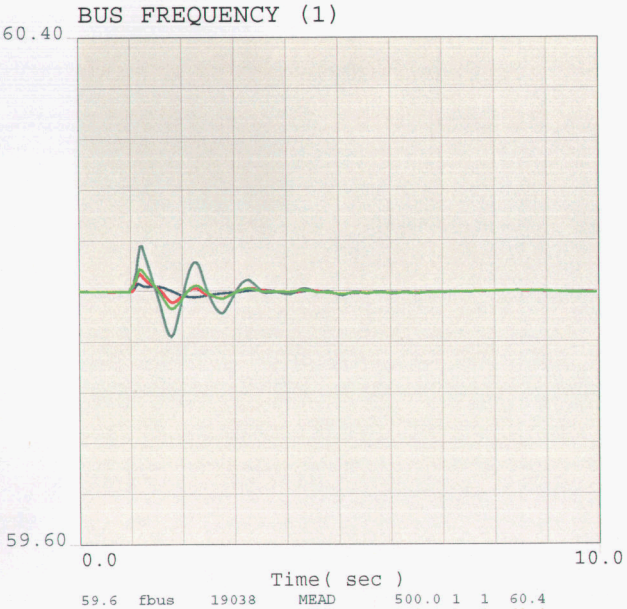

59.6	fbus	19038	MEAD	500.0	1	1	60.4
59.6	fbus	19037	MEAD	345.0	1	1	60.4
59.6	fbus	19315	PEACOCK	345.0	1	1	60.4
59.6	fbus	19053	LIBERTY	345.0	1	1	60.4

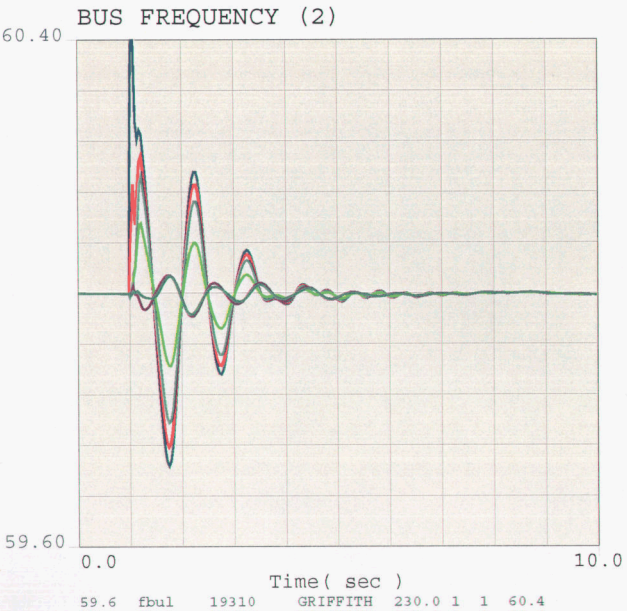

59.6	fbul	19310	GRIFFITH	230.0	1	1	60.4
59.6	fbul	19056	MCCONICO	230.0	1	1	60.4
59.6	fbul	19072	HILLTOP	230.0	1	1	60.4
59.6	fbus	19314	PEACOCK	230.0	1	1	60.4
59.6	fbul	19022	DAVIS	230.0	1	1	60.4
59.6	fbus	19042	PARKER	230.0	1	1	60.4

2008 HEAVY AUTUMN, NORTHERN ARIZONA ENERGY PROJECT, POST-PROJECT - UNS Load Increased
CASE: 08ha_pst_LD-LibBP-rev1.sav
EOR=9300MW, Minimum WAPA-DSW Generation Modeled.
Mohave Off-line, Liberty Phase-Shift Transformer By-passed.
Modeled Northern Arizona Energy Project - 180 MW Net

08hapst_LD-LIBBP_GRPK-reduced_McConnico-Davis-230-slo.chf

c:\upslf16\mypslf

Thu Jul 19 16:20:06 2007

NORTHERN ARIZONA ENERGY PROJECT - TRANSIENT STABILITY PLOTS - PAGE 2

TERMINAL VOLTAGE

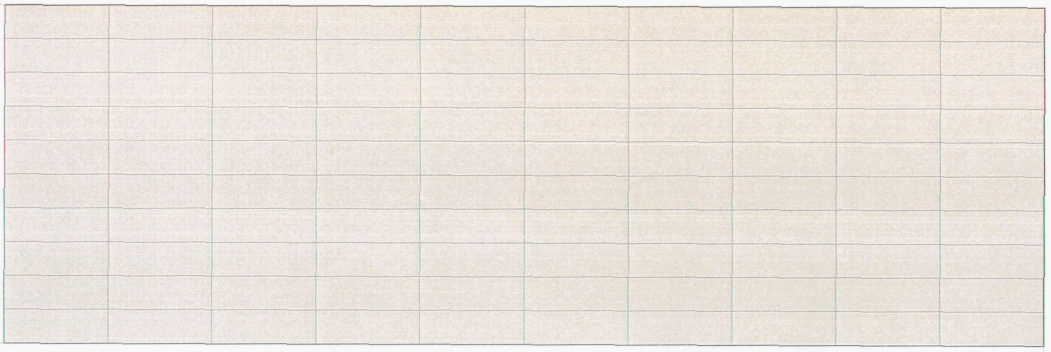

RELATIVE ROTOR ANGLE

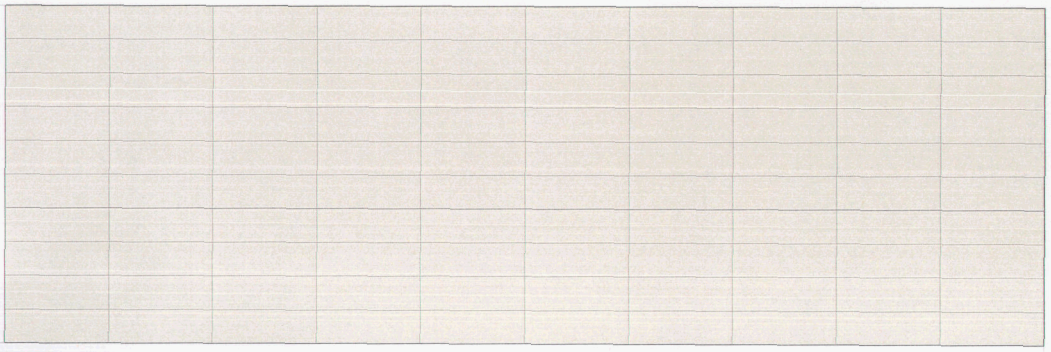

SHAFT SPEED

2008 HEAVY AUTUMN, NORTHERN ARIZONA ENERGY PROJECT, POST-PROJECT - UNS Load Increased
CASE: 08ha_pst_LD-LibBP-rev1.sav
EOR=9300MW, Minimum WAPA-DSW Generation Modeled.
Mohave Off-line, Liberty Phase-Shift Transformer By-passed.
Modeled Northern Arizona Energy Project - 180 MW Net

NORTHERN ARIZONA ENERGY PROJECT - TRANSIENT STABILITY PLOTS - PAGE 1

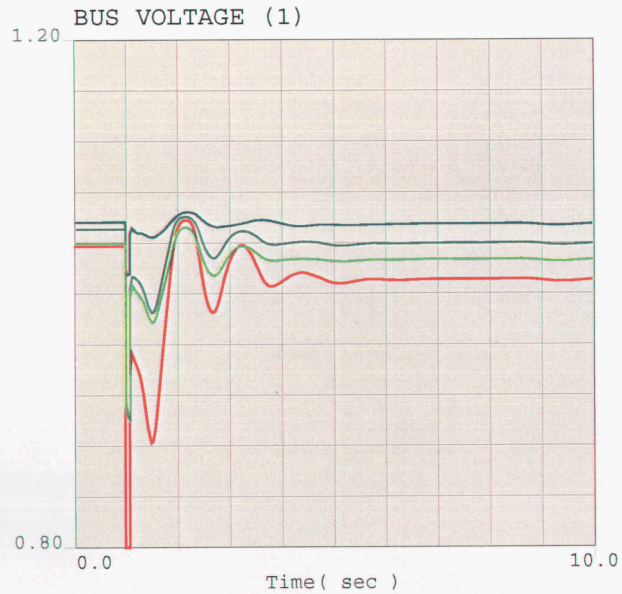

0.8	vbus	19038	MEAD	500.0	1	1	1.2
0.8	vbus	19315	PEACOCK	345.0	1	1	1.2
0.8	vbus	19053	LIBERTY	345.0	1	1	1.2
0.8	vbus	19037	MEAD	345.0	1	1	1.2

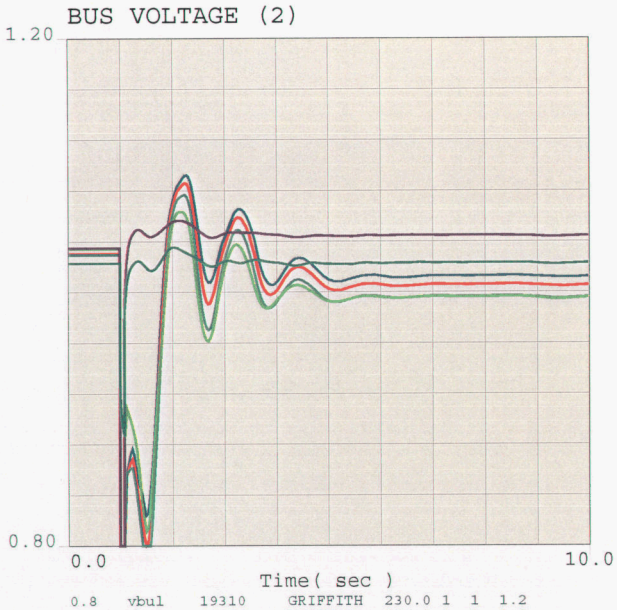

0.8	vbul	19310	GRIFFITH	230.0	1	1	1.2
0.8	vbul	19056	MCCONICO	230.0	1	1	1.2
0.8	vbul	19072	HILLTOP	230.0	1	1	1.2
0.8	vbus	19314	PEACOCK	230.0	1	1	1.2
0.8	vbul	19022	DAVIS	230.0	1	1	1.2
0.8	vbus	19042	PARKER	230.0	1	1	1.2

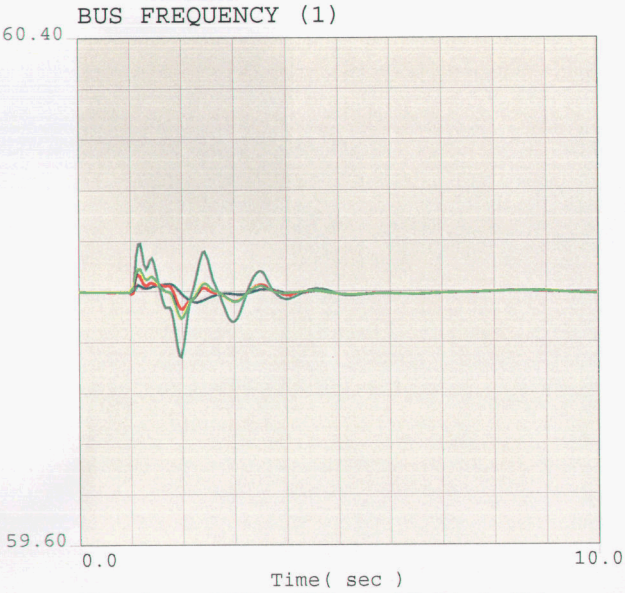

59.6	fbus	19038	MEAD	500.0	1	1	60.4
59.6	fbus	19037	MEAD	345.0	1	1	60.4
59.6	fbus	19315	PEACOCK	345.0	1	1	60.4
59.6	fbus	19053	LIBERTY	345.0	1	1	60.4

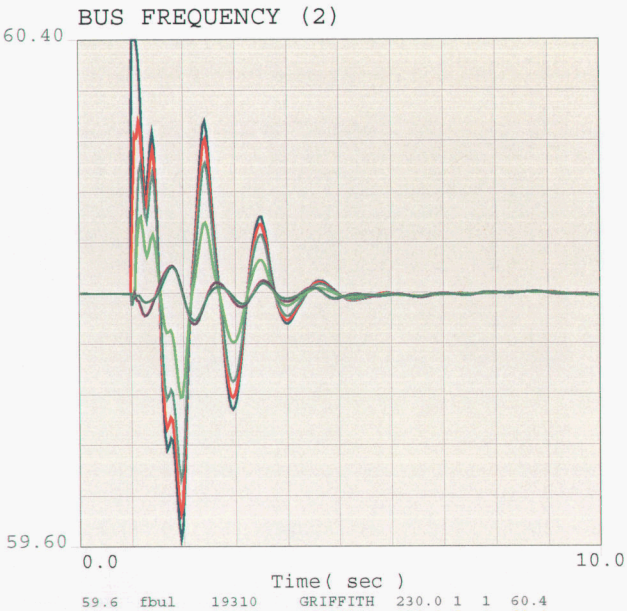

59.6	fbul	19310	GRIFFITH	230.0	1	1	60.4
59.6	fbul	19056	MCCONICO	230.0	1	1	60.4
59.6	fbul	19072	HILLTOP	230.0	1	1	60.4
59.6	fbus	19314	PEACOCK	230.0	1	1	60.4
59.6	fbul	19022	DAVIS	230.0	1	1	60.4
59.6	fbus	19042	PARKER	230.0	1	1	60.4

2008 HEAVY AUTUMN, NORTHERN ARIZONA ENERGY PROJECT, POST-PROJECT - UNS Load Increased
CASE: 08ha_pst_LD-LibBP-rev1.sav
EOR=9300MW, Minimum WAPA-DSW Generation Modeled.
Mohave Off-line, Liberty Phase-Shift Transformer By-passed.
Modeled Northern Arizona Energy Project - 180 MW Net

08hapst_LD-LibBp_GR-PK_McConnico-Davis-230-slo.chf

c:\upslf16\mypslf

Thu Jul 19 16:20:11 2007

NORTHERN ARIZONA ENERGY PROJECT - TRANSIENT STABILITY PLOTS - PAGE 2

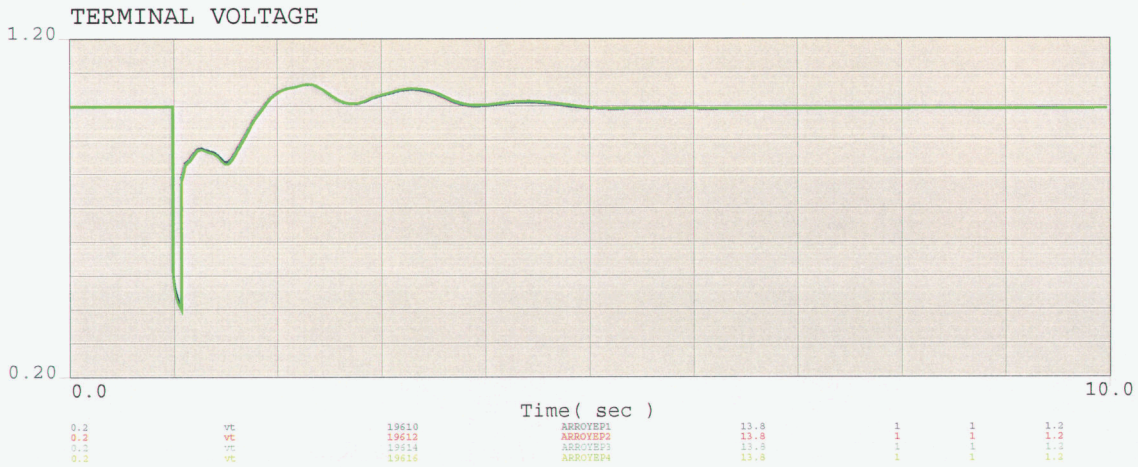

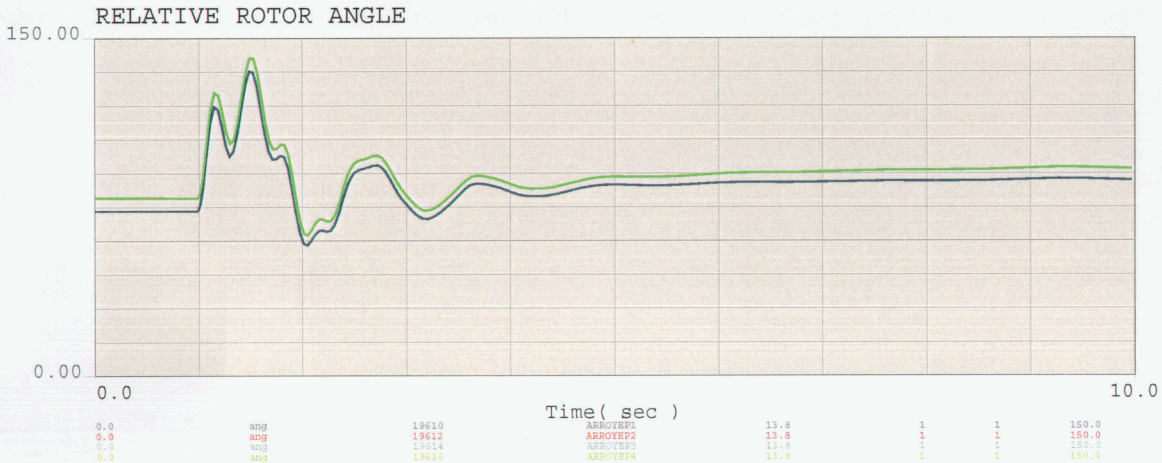

2008 HEAVY AUTUMN, NORTHERN ARIZONA ENERGY PROJECT, POST-PROJECT - UNS Load Increased
CASE: 08ha_pst_LD-LibBP-rev1.sav
EOR=9300MW, Minimum WAPA-DSW Generation Modeled.
Mohave Off-line, Liberty Phase-Shift Transformer By-passed.
Modeled Northern Arizona Energy Project - 180 MW Net

08hapst_LD-LibBp_GR-PK_McConnico-Davis-230-slo.chf

c:\upslf16\mypslf

Thu Jul 19 16:20:11 2007

NORTHERN ARIZONA ENERGY PROJECT - TRANSIENT STABILITY PLOTS - PAGE 1

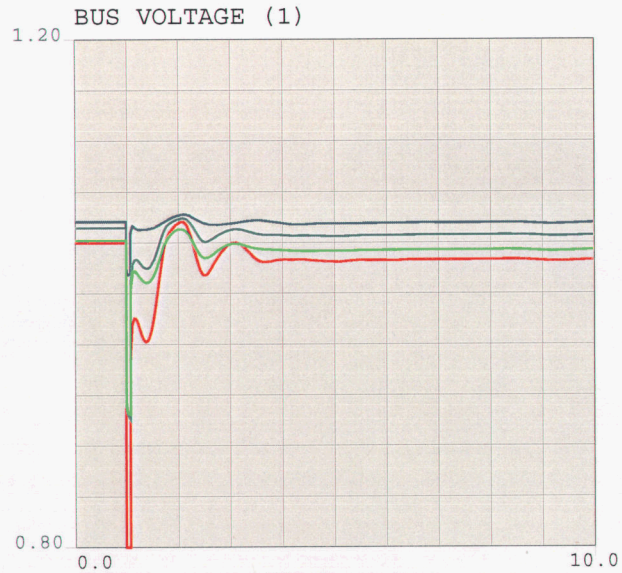

0.8	vbus	19038	MEAD	500.0	1	1	1.2
0.8	vbus	19315	PEACOCK	345.0	1	1	1.2
0.8	vbus	19053	LIBERTY	345.0	1	1	1.2
0.8	vbus	19037	MEAD	345.0	1	1	1.2

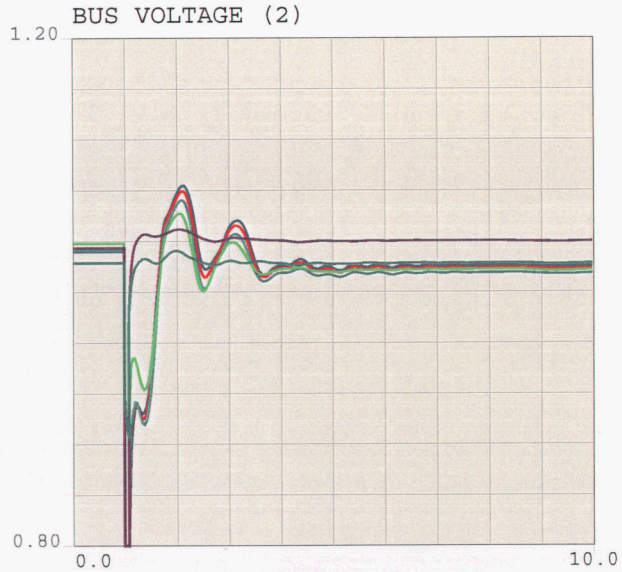

0.8	vbul	19310	GRIFFITH	230.0	1	1	1.2
0.8	vbul	19056	MCCONICO	230.0	1	1	1.2
0.8	vbul	19072	HILLTOP	230.0	1	1	1.2
0.8	vbus	19314	PEACOCK	230.0	1	1	1.2
0.8	vbul	19022	DAVIS	230.0	1	1	1.2
0.8	vbus	19042	PARKER	230.0	1	1	1.2

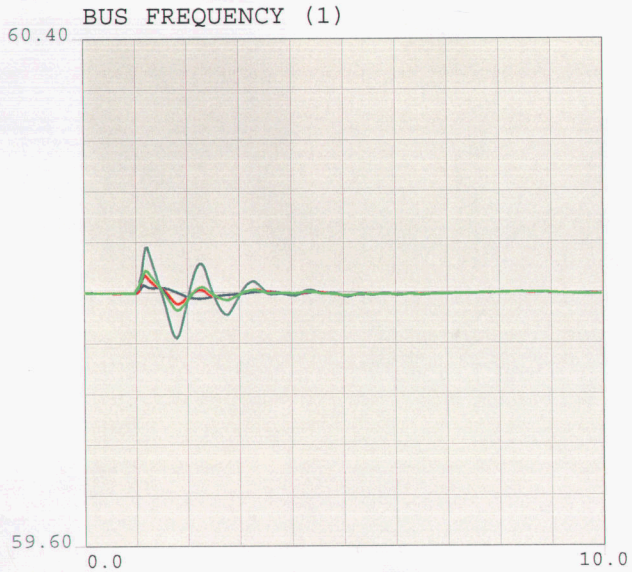

59.6	fbus	19038	MEAD	500.0	1	1	60.4
59.6	fbus	19037	MEAD	345.0	1	1	60.4
59.6	fbus	19315	PEACOCK	345.0	1	1	60.4
59.6	fbus	19053	LIBERTY	345.0	1	1	60.4

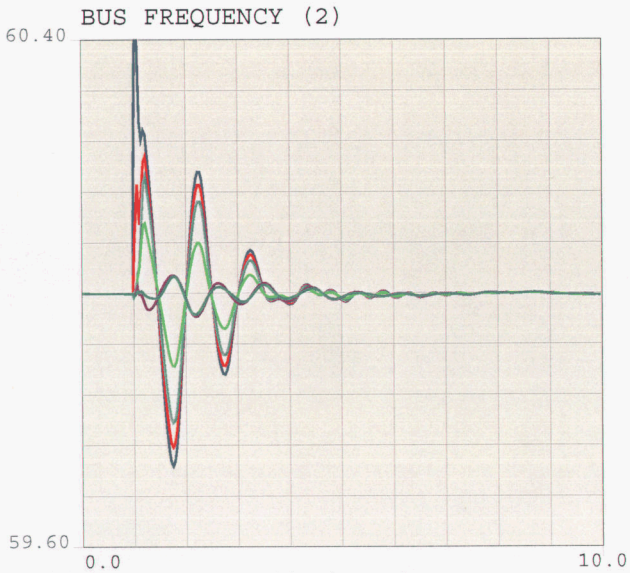

59.6	fbul	19310	GRIFFITH	230.0	1	1	60.4
59.6	fbul	19056	MCCONICO	230.0	1	1	60.4
59.6	fbul	19072	HILLTOP	230.0	1	1	60.4
59.6	fbus	19314	PEACOCK	230.0	1	1	60.4
59.6	fbul	19022	DAVIS	230.0	1	1	60.4
59.6	fbus	19042	PARKER	230.0	1	1	60.4

2008 HEAVY AUTUMN, NORTHERN ARIZONA ENERGY PROJECT, POST-PROJECT - UNS Load Increased
CASE: 08ha_pst_LD-LibBP-rev1.sav
EOR=9300MW, Minimum WAPA-DSW Generation Modeled.
Mohave Off-line, Liberty Phase-Shift Transformer By-passed.
Modeled Northern Arizona Energy Project - 180 MW Net

08hapst_LD-LIBBP_GRPK-reduced_McConnico-Davis-230-slo.chf

c:\upslf16\mypslf

Thu Jul 19 16:20:14 2007

TERMINAL VOLTAGE

RELATIVE ROTOR ANGLE

SHAFT SPEED

2008 HEAVY AUTUMN, NORTHERN ARIZONA ENERGY PROJECT, POST-PROJECT - UNS Load Increased
CASE: 08ha_pst_LD-LibBP-rev1.sav
EOR=9300MW, Minimum WAPA-DSW Generation Modeled.
Mohave Off-line, Liberty Phase-Shift Transformer By-passed.
Modeled Northern Arizona Energy Project - 180 MW Net

NORTHERN ARIZONA ENERGY PROJECT - TRANSIENT STABILITY PLOTS - PAGE 1

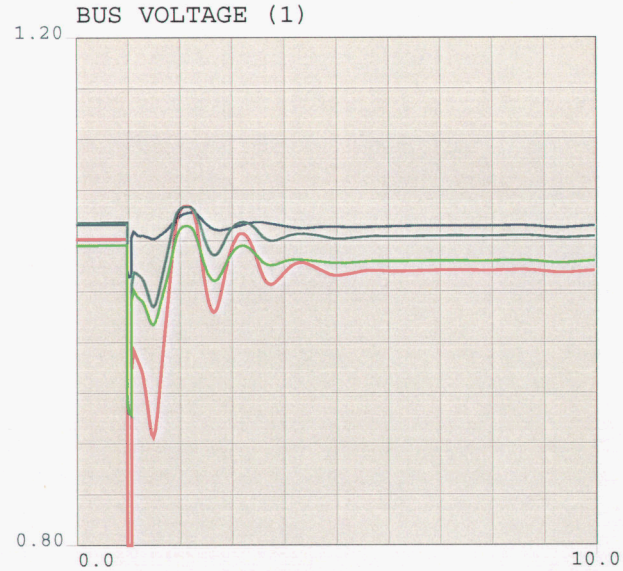

0.8	vbus	19038	MEAD	500.0	1	1	1.2
0.8	vbus	19315	PEACOCK	345.0	1	1	1.2
0.8	vbus	19053	LIBERTY	345.0	1	1	1.2
0.8	vbus	19037	MEAD	345.0	1	1	1.2

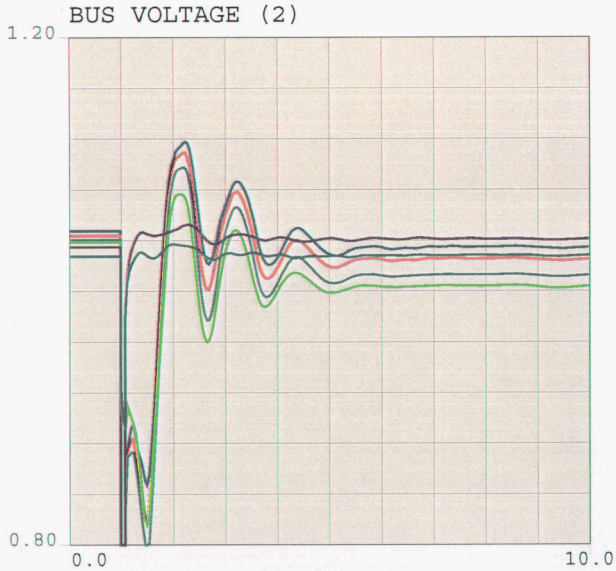

0.8	vbul	19310	GRIFFITH	230.0	1	1	1.2
0.8	vbul	19056	MCCONICO	230.0	1	1	1.2
0.8	vbul	19072	HILLTOP	230.0	1	1	1.2
0.8	vbus	19314	PEACOCK	230.0	1	1	1.2
0.8	vbul	19022	DAVIS	230.0	1	1	1.2
0.8	vbus	19042	PARKER	230.0	1	1	1.2

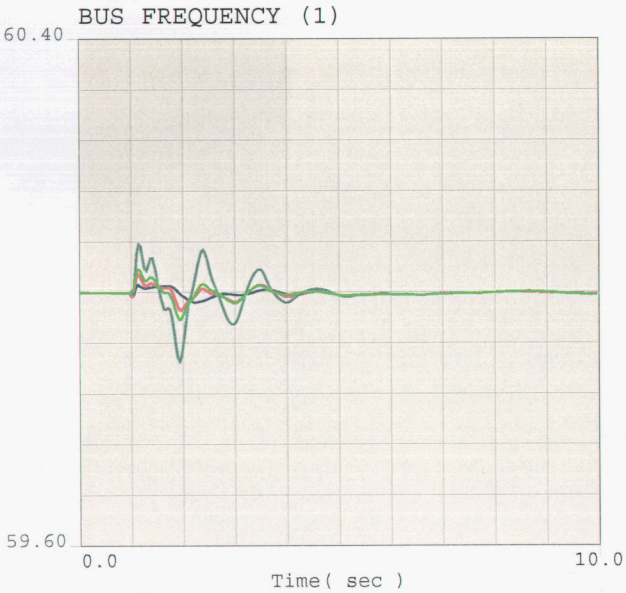

59.6	fbus	19038	MEAD	500.0	1	1	60.4
59.6	fbus	19037	MEAD	345.0	1	1	60.4
59.6	fbus	19315	PEACOCK	345.0	1	1	60.4
59.6	fbus	19053	LIBERTY	345.0	1	1	60.4

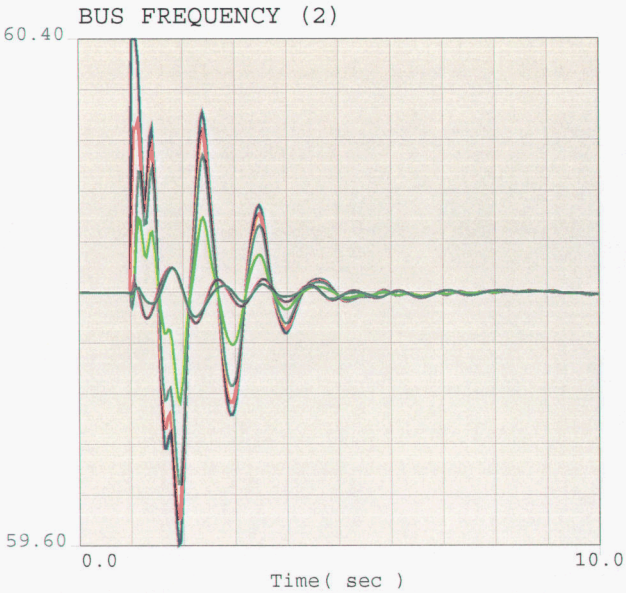

59.6	fbul	19310	GRIFFITH	230.0	1	1	60.4
59.6	fbul	19056	MCCONICO	230.0	1	1	60.4
59.6	fbul	19072	HILLTOP	230.0	1	1	60.4
59.6	fbus	19314	PEACOCK	230.0	1	1	60.4
59.6	fbul	19022	DAVIS	230.0	1	1	60.4
59.6	fbus	19042	PARKER	230.0	1	1	60.4

2008 HEAVY AUTUMN, NORTHERN ARIZONA ENERGY PROJECT, POST-PROJECT - Area Interchange
CASE: 08ha_pst_maxAI-LibBP-rev1.sav
EOR=9300MW, Maximum WAPA-DSW Generation Modeled.
Mohave Off-line, Liberty Phase-Shift Transformer By-passed.
Modeled Northern Arizona Energy Project - 180 MW Net

08hapst_maxAI-LibBP_GR-PK_McConnico-Davis-230-slo.chf

c:\upslf16\mypslf

Thu Jul 19 16:20:21 2007

NORTHERN ARIZONA ENERGY PROJECT - TRANSIENT STABILITY PLOTS - PAGE 2

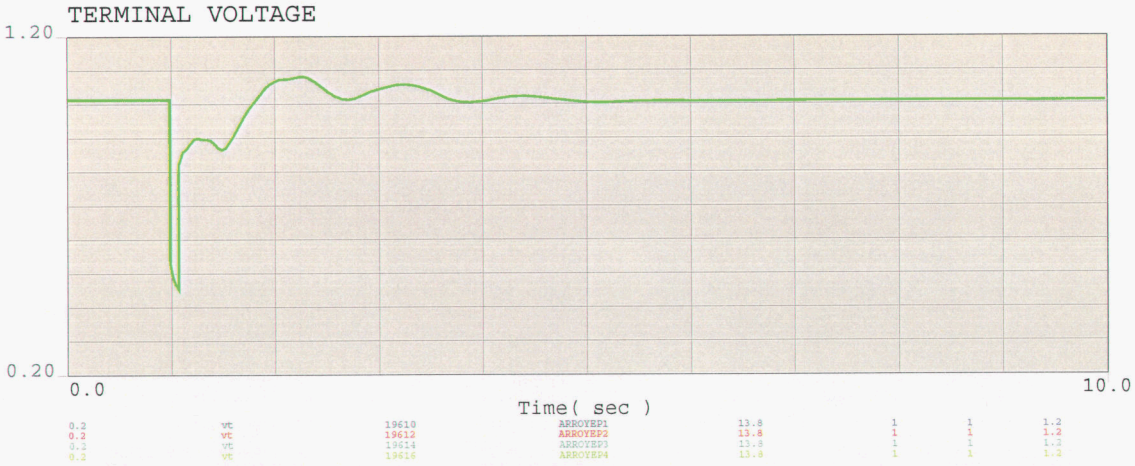

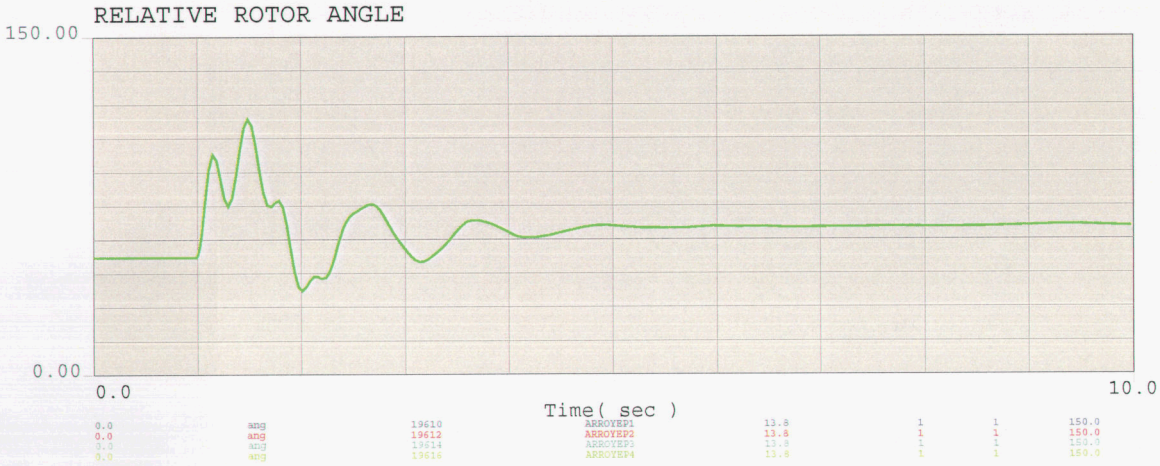

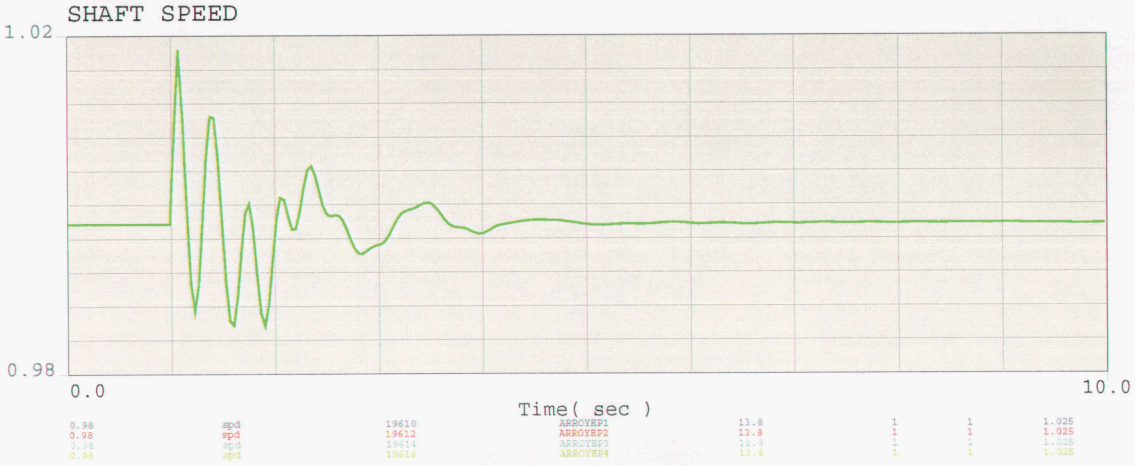

2008 HEAVY AUTUMN, NORTHERN ARIZONA ENERGY PROJECT, POST-PROJECT - Area Interchange
CASE: 08ha_pst_maxAI-LibBP-rev1.sav
EOR=9300MW, Maximum WAPA-DSW Generation Modeled.
Mohave Off-line, Liberty Phase-Shift Transformer By-passed.
Modeled Northern Arizona Energy Project - 180 MW Net

NORTHERN ARIZONA ENERGY PROJECT - TRANSIENT STABILITY PLOTS - PAGE 1

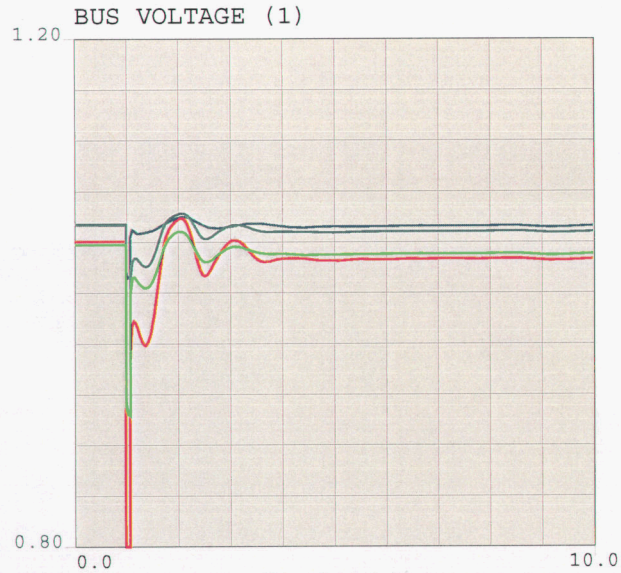

0.8	vbus	19038	MEAD	500.0	1	1	1.2
0.8	vbus	19315	PEACOCK	345.0	1	1	1.2
0.8	vbus	19053	LIBERTY	345.0	1	1	1.2
0.8	vbus	19037	MEAD	345.0	1	1	1.2

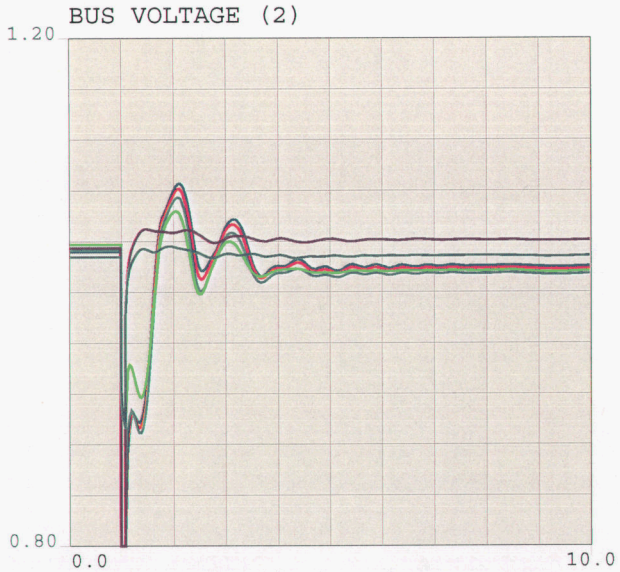

0.8	vbul	19310	GRIFFITH	230.0	1	1	1.2
0.8	vbul	19056	MCCONICO	230.0	1	1	1.2
0.8	vbul	19072	HILLTOP	230.0	1	1	1.2
0.8	vbus	19314	PEACOCK	230.0	1	1	1.2
0.8	vbul	19022	DAVIS	230.0	1	1	1.2
0.8	vbus	19042	PARKER	230.0	1	1	1.2

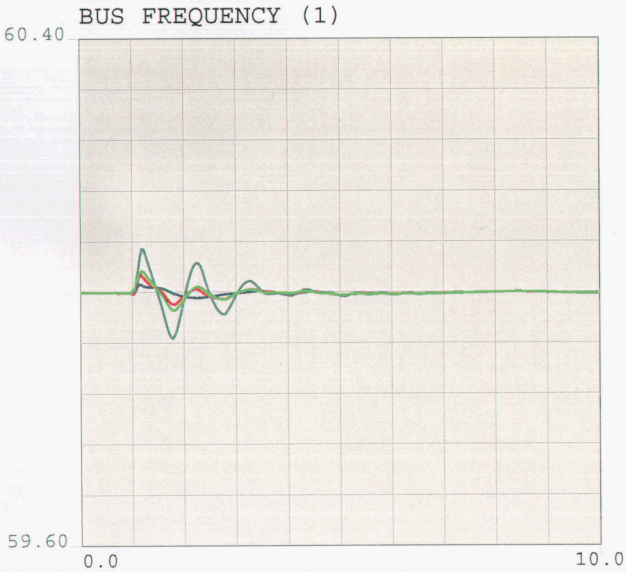

59.6	fbus	19038	MEAD	500.0	1	1	60.4
59.6	fbus	19037	MEAD	345.0	1	1	60.4
59.6	fbus	19315	PEACOCK	345.0	1	1	60.4
59.6	fbus	19053	LIBERTY	345.0	1	1	60.4

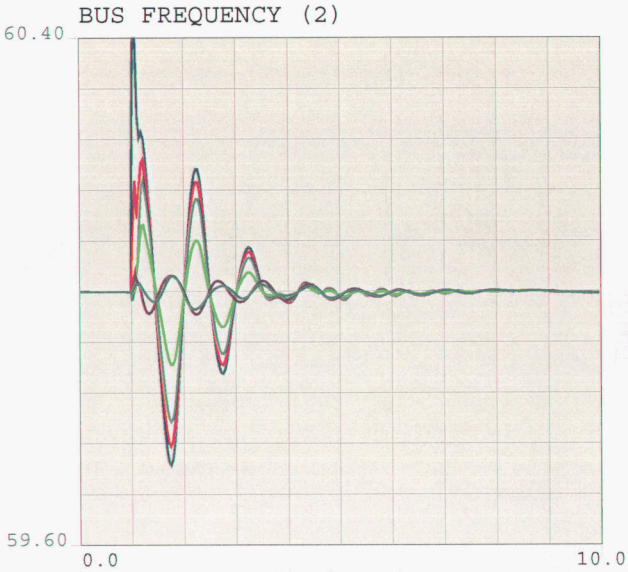

59.6	fbul	19310	GRIFFITH	230.0	1	1	60.4
59.6	fbul	19056	MCCONICO	230.0	1	1	60.4
59.6	fbul	19072	HILLTOP	230.0	1	1	60.4
59.6	fbus	19314	PEACOCK	230.0	1	1	60.4
59.6	fbul	19022	DAVIS	230.0	1	1	60.4
59.6	fbus	19042	PARKER	230.0	1	1	60.4

2008 HEAVY AUTUMN, NORTHERN ARIZONA ENERGY PROJECT, POST-PROJECT - Area Interchange
CASE: 08ha_pst_maxAI-LibBP-rev1.sav
EOR=9300MW, Maximum WAPA-DSW Generation Modeled.
Mohave Off-line, Liberty Phase-Shift Transformer By-passed.
Modeled Northern Arizona Energy Project - 180 MW Net

08hapst_maxAI-LIBBP_GRPK-reduced_McConnico-Davis-230-slo.chf

c:\upslf16\mypslf

Thu Jul 19 16:20:27 2007

NORTHERN ARIZONA ENERGY PROJECT - TRANSIENT STABILITY PLOTS - PAGE 2

TERMINAL VOLTAGE

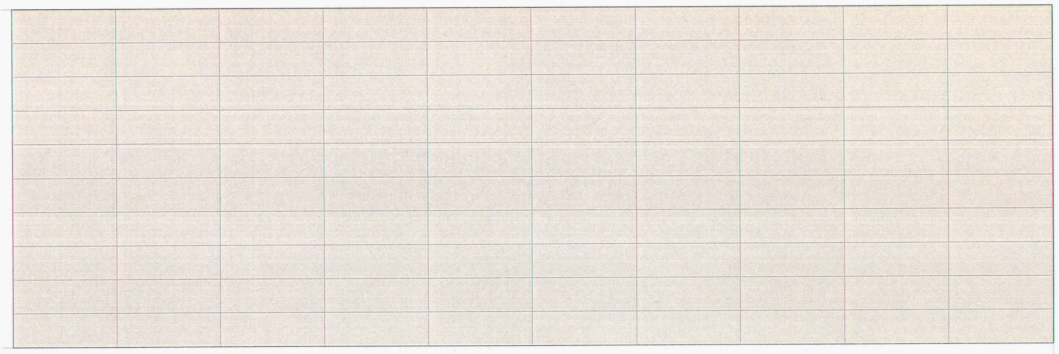

RELATIVE ROTOR ANGLE

SHAFT SPEED

2008 HEAVY AUTUMN, NORTHERN ARIZONA ENERGY PROJECT, POST-PROJECT - Area Interchange
CASE: 08ha_pst_maxAI-LibBP-rev1.sav
EOR=9300MW, Maximum WAPA-DSW Generation Modeled.
Mohave Off-line, Liberty Phase-Shift Transformer By-passed.
Modeled Northern Arizona Energy Project - 180 MW Net

NORTHERN ARIZONA ENERGY PROJECT - TRANSIENT STABILITY PLOTS - PAGE 1

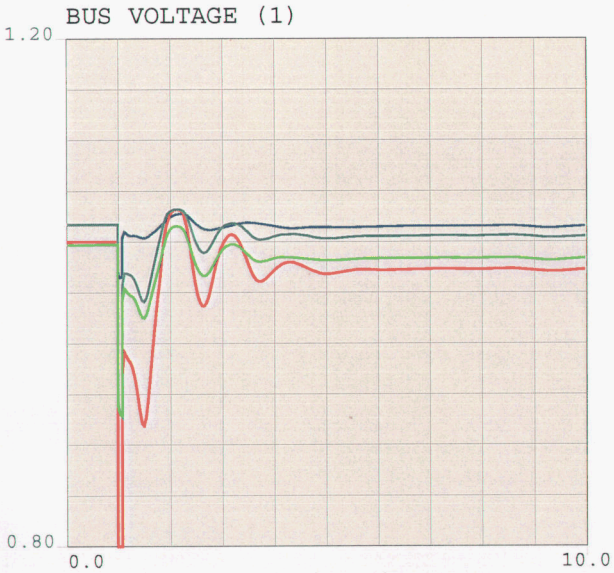

0.8	vbus	19038	MEAD	500.0	1	1	1.2
0.8	vbus	19315	PEACOCK	345.0	1	1	1.2
0.8	vbus	19053	LIBERTY	345.0	1	1	1.2
0.8	vbus	19037	MEAD	345.0	1	1	1.2

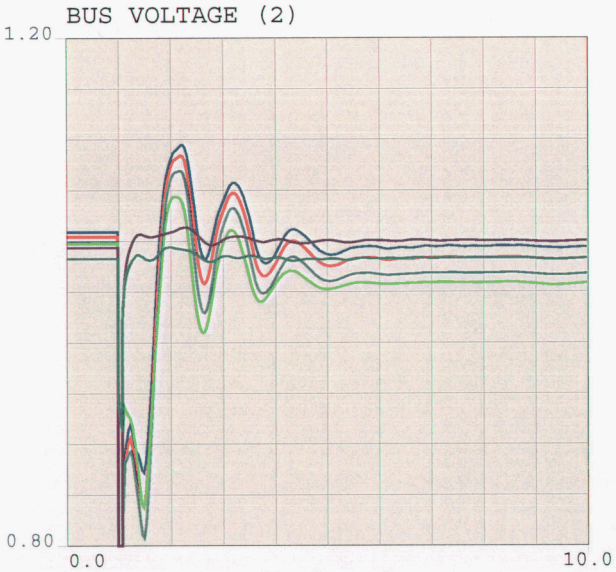

0.8	vbul	19310	GRIFFITH	230.0	1	1	1.2
0.8	vbul	19056	MCCONICO	230.0	1	1	1.2
0.8	vbul	19072	HILLTOP	230.0	1	1	1.2
0.8	vbus	19314	PEACOCK	230.0	1	1	1.2
0.8	vbul	19022	DAVIS	230.0	1	1	1.2
0.8	vbus	19042	PARKER	230.0	1	1	1.2

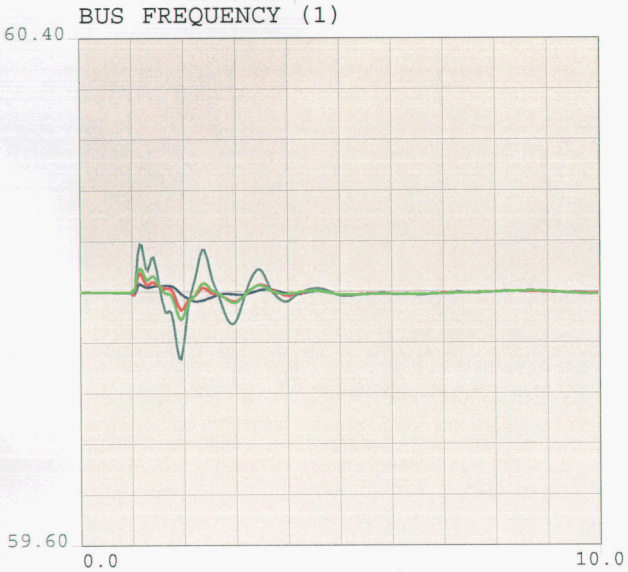

59.6	fbus	19038	MEAD	500.0	1	1	60.4
59.6	fbus	19037	MEAD	345.0	1	1	60.4
59.6	fbus	19315	PEACOCK	345.0	1	1	60.4
59.6	fbus	19053	LIBERTY	345.0	1	1	60.4

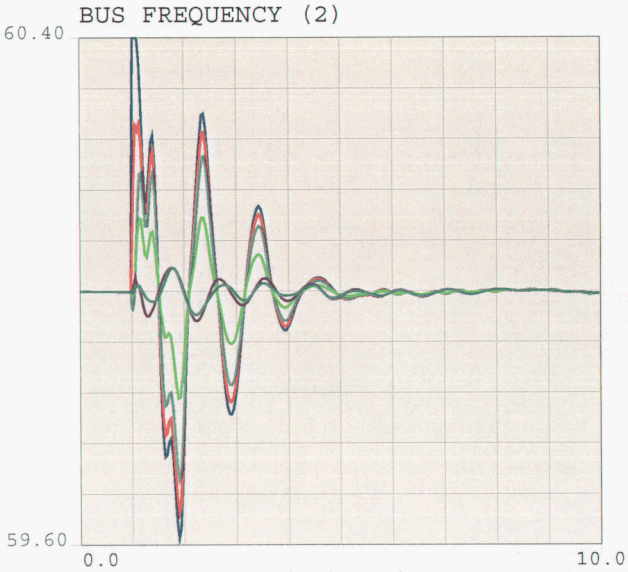

59.6	fbul	19310	GRIFFITH	230.0	1	1	60.4
59.6	fbul	19056	MCCONICO	230.0	1	1	60.4
59.6	fbul	19072	HILLTOP	230.0	1	1	60.4
59.6	fbus	19314	PEACOCK	230.0	1	1	60.4
59.6	fbul	19022	DAVIS	230.0	1	1	60.4
59.6	fbus	19042	PARKER	230.0	1	1	60.4

2008 HEAVY AUTUMN, NORTHERN ARIZONA ENERGY PROJECT, POST-PROJECT - UNS Load Increased
CASE: 08ha_pst_maxLD-LibBP-rev1.sav
EOR=9300MW, Maximum WAPA-DSW Generation Modeled.
Mohave Off-line, Liberty Phase-Shift Transformer By-passed.
Modeled Northern Arizona Energy Project - 180 MW Net

08hapst_maxLD-LibBP_GR-PK_McConnico-Davis-230-slo.chf

c:\upslf16\mypslf

Thu Jul 19 16:20:34 2007

NORTHERN ARIZONA ENERGY PROJECT - TRANSIENT STABILITY PLOTS - PAGE 2

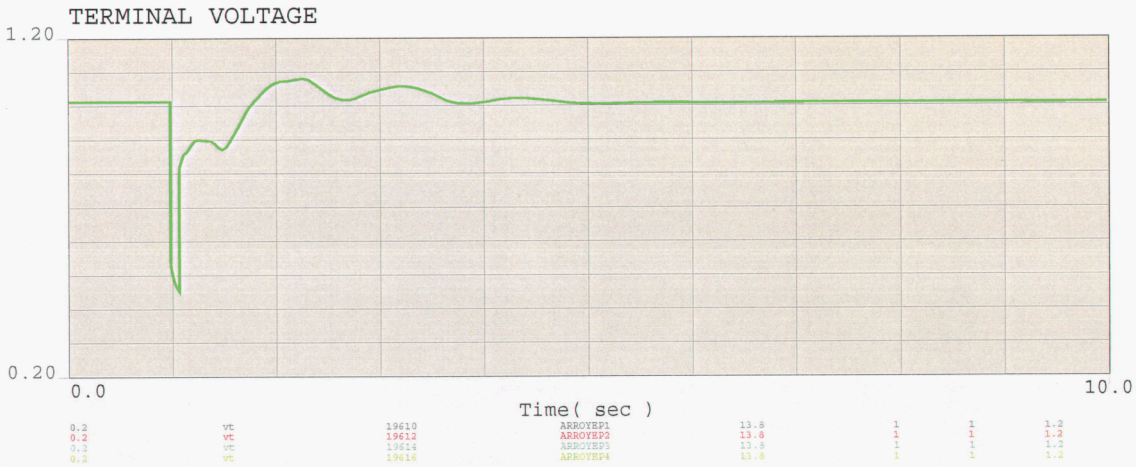

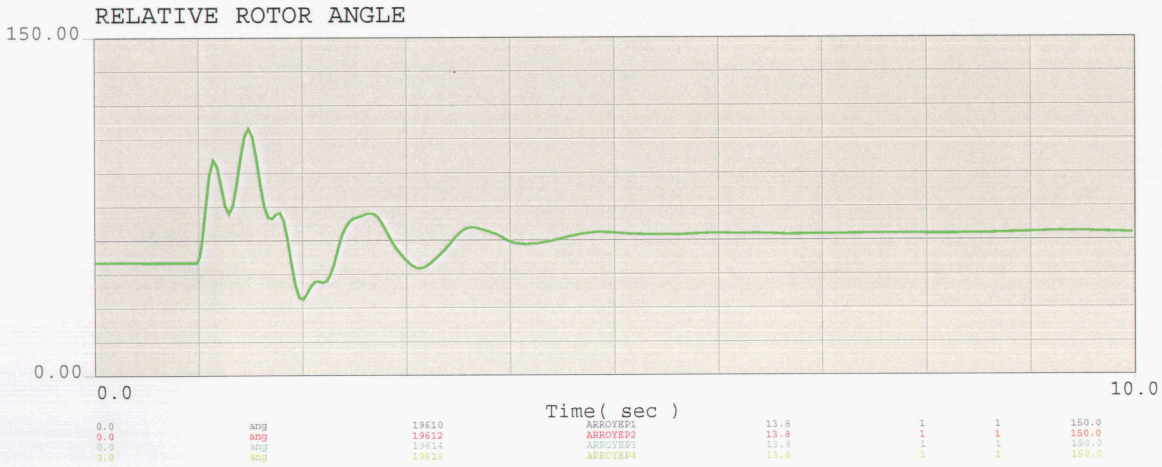

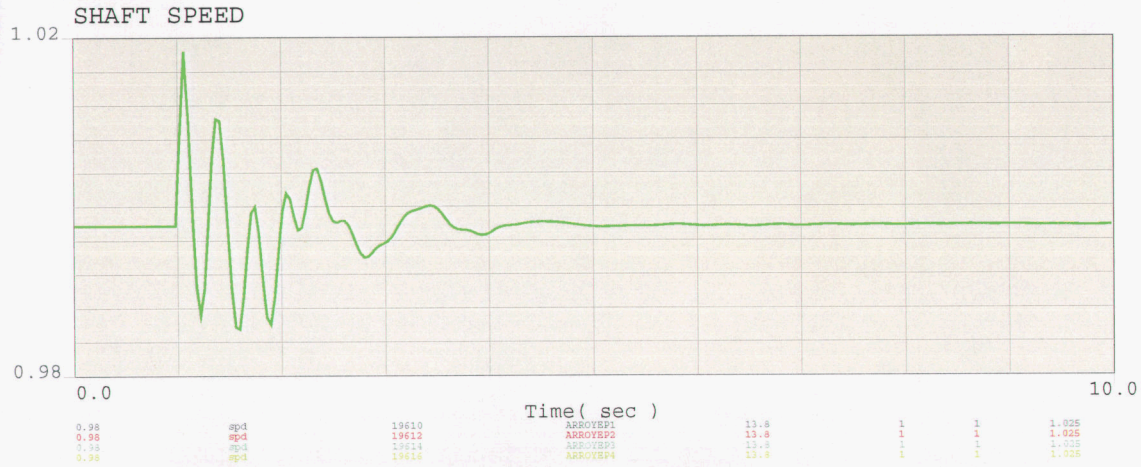

2008 HEAVY AUTUMN, NORTHERN ARIZONA ENERGY PROJECT, POST-PROJECT - UNS Load Increased
CASE: 08ha_pst_maxLD-LibBP-rev1.sav
EOR=9300MW, Maximum WAPA-DSW Generation Modeled.
Mohave Off-line, Liberty Phase-Shift Transformer By-passed.
Modeled Northern Arizona Energy Project - 180 MW Net

08hapst_maxLD-LibBP_GR-PK_McConnico-Davis-230-slo.chf

c:\upslf16\mypslf

Thu Jul 19 16:20:34 2007

NORTHERN ARIZONA ENERGY PROJECT - TRANSIENT STABILITY PLOTS - PAGE 1

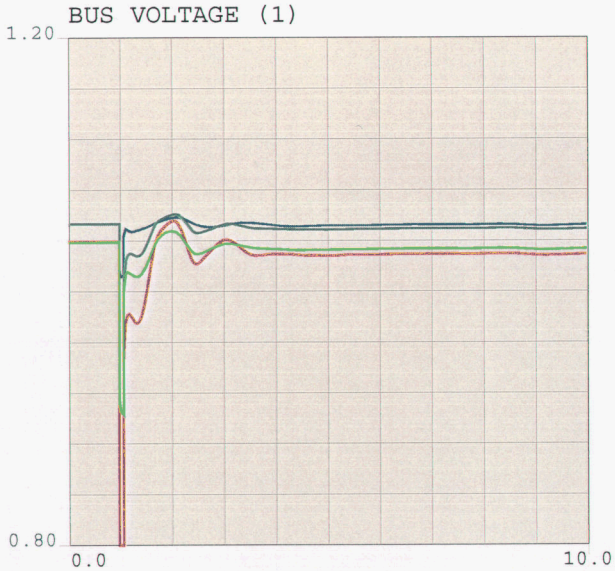

0.8	vbus	19038	MEAD	500.0	1	1	1.2
0.8	vbus	19315	PEACOCK	345.0	1	1	1.2
0.8	vbus	19053	LIBERTY	345.0	1	1	1.2
0.8	vbus	19037	MEAD	345.0	1	1	1.2

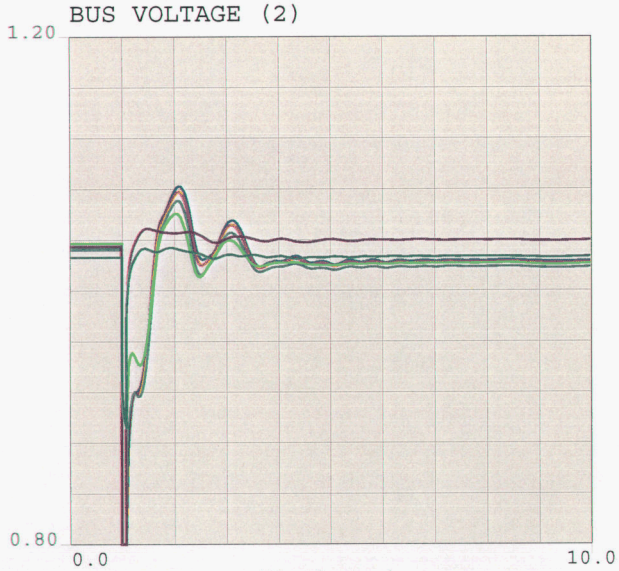

0.8	vbul	19310	GRIFFITH	230.0	1	1	1.2
0.8	vbul	19056	MCCONICO	230.0	1	1	1.2
0.8	vbul	19072	HILLTOP	230.0	1	1	1.2
0.8	vbus	19314	PEACOCK	230.0	1	1	1.2
0.8	vbul	19022	DAVIS	230.0	1	1	1.2
0.8	vbus	19042	PARKER	230.0	1	1	1.2

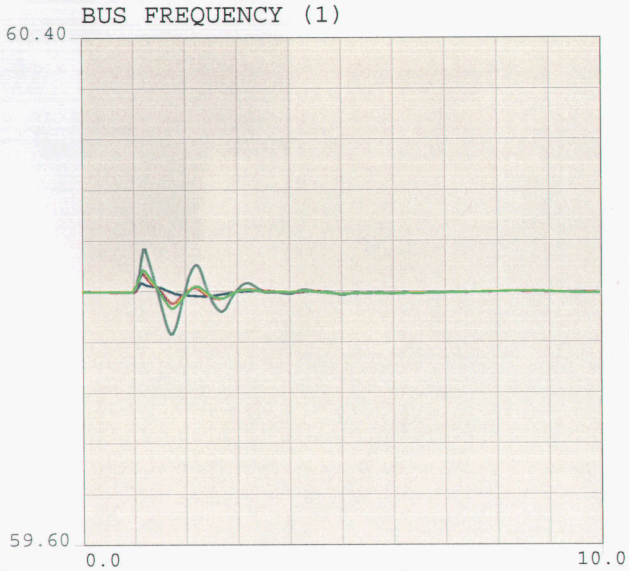

59.6	fbus	19038	MEAD	500.0	1	1	60.4
59.6	fbus	19037	MEAD	345.0	1	1	60.4
59.6	fbus	19315	PEACOCK	345.0	1	1	60.4
59.6	fbus	19053	LIBERTY	345.0	1	1	60.4

59.6	fbul	19310	GRIFFITH	230.0	1	1	60.4
59.6	fbul	19056	MCCONICO	230.0	1	1	60.4
59.6	fbul	19072	HILLTOP	230.0	1	1	60.4
59.6	fbus	19314	PEACOCK	230.0	1	1	60.4
59.6	fbul	19022	DAVIS	230.0	1	1	60.4
59.6	fbus	19042	PARKER	230.0	1	1	60.4

2008 HEAVY AUTUMN, NORTHERN ARIZONA ENERGY PROJECT, POST-PROJECT - UNS Load Increased
CASE: 08ha_pst_maxLD-LibBP-rev1.sav
EOR=9300MW, Maximum WAPA-DSW Generation Modeled.
Mohave Off-line, Liberty Phase-Shift Transformer By-passed.
Modeled Northern Arizona Energy Project - 180 MW Net

08hapst_maxLD-LIBBP_GRPK-reduced_McConnico-Davis-230-slo.chf

c:\upslf16\mypslf

Thu Jul 19 16:20:41 2007

TERMINAL VOLTAGE

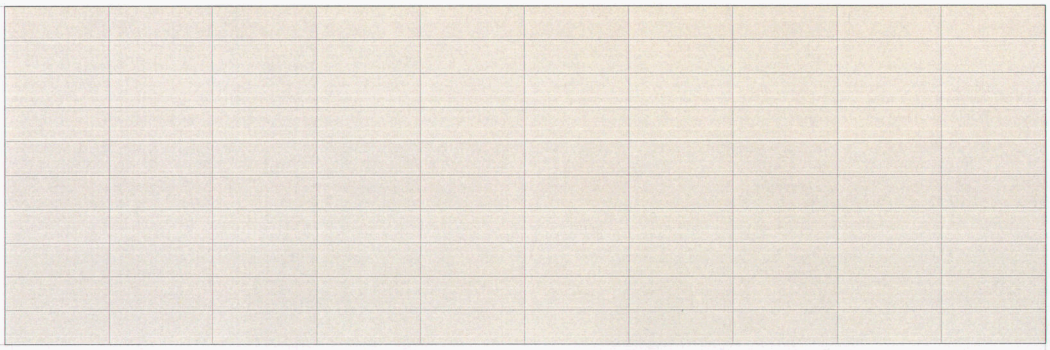

RELATIVE ROTOR ANGLE

SHAFT SPEED

2008 HEAVY AUTUMN, NORTHERN ARIZONA ENERGY PROJECT, POST-PROJECT - UNS Load Increased
CASE: 08ha_pst_maxLD-LibBP-rev1.sav
EOR=9300MW, Maximum WAPA-DSW Generation Modeled.
Mohave Off-line, Liberty Phase-Shift Transformer By-passed.
Modeled Northern Arizona Energy Project - 180 MW Net

Appendix F

Load Distribution and Generation Shift Factors

Load Distribution and Generation Shift factors have been calculated and are tabulated in **Tables F-1** and **F-2**. **Table F-1** is based on the Liberty PST in-service at 450 MW and **Table F-2** is based on the Liberty PST being by-passed.

For the N-1-1 contingencies, the load distribution factors were calculated based on "Contingency1" being out of service then "Contingency2". Therefore, there is a load factor based on the 1st element being out service and then a load factor based on the 1st and 2nd elements being out of service. These load factors are the amount of power that will flow onto the "Affected Element" for loss of that element

The "Calc Max Post-contingency Loading" column is the flow limit calculation based on the base case flow. This value exceeds the continuous rating of the element. However, from an operations perspective, the flow limit value should never exceed the continuous rating of the "Affected Element".

The "Gen Reduction Requirement" is the amount of NAEP/Griffith generation that needs to be reduced to achieve a post-contingency power flow less than the normal rating of the element.

Table F-1. 2008 Heavy Autumn – Liberty PST In-Service at 450 MW (s2n).

Contingency1	Contingency2	AFFECTED ELEMENT	Contingency1 %LODF	Contingency2 %LODF	Normal Rating (amps)	Calc Max Post-contingency Loading (amps)	Gen Shift Factor	Gen Reduction Rqmt (MW)
Griffith - Peacock 230 kV	Davis - Mc Connico 230 kV	Hilltop - Mc Connico 230 kV	0.7512	1.0000	1130	1,678	1.0000	218
Griffith - Peacock 230 kV	Hilltop - Peacock 230 kV	Davis - Mc Connico 230 kV	0.2488	1.0000	1130	1,678	1.0000	218
Griffith - Peacock 230 kV	Hilltop - Mc Connico 230 kV	Davis - Mc Connico 230 kV	0.2488	1.0000	1130	1,428	1.0000	119
Peacock 345/230 kV Xfmr	Davis - Mc Connico 230 kV	Prescott - Yavapai 230 kV	0.2357	0.7013	670	991	0.7120	91
Peacock 345/230 kV Xfmr	Davis - Mc Connico 230 kV	Round Valley - Peacock 230 kV	0.3427	1.0000	816	1,423	1.0000	242
Peacock 345/230 kV Xfmr	Davis - Mc Connico 230 kV	Round Valley - Prescott 230 kV	0.3427	1.0000	816	1,385	1.0000	227
Peacock 345/230 kV Xfmr	Griffith - Mc Connico 230 kV	Hilltop - Peacock 230 kV	0.3452	0.8722	1130	1,273	0.6186	35
South Point-Topock No.1 230 kV	S.Point-Topock No.2 230 kV	Davis - Mc Connico 230 kV	0.0000	0.1886	1130	1,698	0.4137	94
Mead 345/230 kV Xfmr	-	Davis - Mc Connico 230 kV	0.5283	-	1130	1,501	0.5057	75
Mead 345/230 kV Xfmr	Black Mesa - Topock 230 kV	Davis - Mc Connico 230 kV	0.5283	-0.1326	1130	1,425	0.4956	58
Mead 345/230 kV Xfmr	Davis - Mc Connico 230 kV	Round Valley - Peacock 230 kV	0.1595	0.3358	816	891	0.3411	10
Mead 345/230 kV Xfmr	Davis - Mc Cullough 230 kV	Davis - Mc Connico 230 kV	0.5283	-0.2679	1130	1,337	0.4569	38
Mead 345/230 kV Xfmr	Davis - Mead N 230 kV	Davis - Mc Connico 230 kV	0.5283	-0.2656	1130	1,347	0.4579	40
Mead 345/230 kV Xfmr	Davis - Topock No.2 230 kV	Davis - Mc Connico 230 kV	0.5283	0.0778	1130	1,495	0.4999	73
Mead 345/230 kV Xfmr	Davis - ZORB 230 kV	Davis - Mc Connico 230 kV	0.5283	-0.0745	1130	1,470	0.5004	68
Mead 345/230 kV Xfmr	Griffith - Mc Connico 230 kV	Hilltop - Peacock 230 kV	0.1791	0.7856	1130	1,446	0.3653	46
Mead 345/230 kV Xfmr	Griffith - Peacock 230 kV	Davis - Mc Connico 230 kV	0.5283	0.2144	1130	1,540	0.5797	95
Mead 345/230 kV Xfmr	Hilltop - Mc Connico 230 kV	Davis - Mc Connico 230 kV	0.5283	-0.2319	1130	1,475	0.5402	74
Mead 345/230 kV Xfmr	Hilltop - Peacock 230 kV	Davis - Mc Connico 230 kV	0.5283	-0.2319	1130	1,428	0.5402	64
Mead 345/230 kV Xfmr	Liberty - Westwing 230 kV	Davis - Mc Connico 230 kV	0.5283	0.0296	1130	1,494	0.5080	74
Mead 345/230 kV Xfmr	Mead S - Mead N No.1 230 kV	Davis - Mc Connico 230 kV	0.5283	0.0011	1130	1,492	0.5057	73
Mead 345/230 kV Xfmr	Mead S - Mead N No.2 230 kV	Davis - Mc Connico 230 kV	0.5283	0.0011	1130	1,492	0.5057	73
Mead 345/230 kV Xfmr	N.Havasu - Topock 230 kV	Davis - Mc Connico 230 kV	0.5283	-0.1242	1130	1,433	0.4972	60
Mead 345/230 kV Xfmr	South Point-Topock No.1 230 kV	Davis - Mc Connico 230 kV	0.5283	0.0000	1130	1,491	0.5057	73
Mead 345/230 kV Xfmr	South Point-Topock No.2 230 kV	Davis - Mc Connico 230 kV	0.5283	0.0000	1130	1,491	0.5057	73
Mead 345/230 kV Xfmr	Topock - ZORB 230 kV	Davis - Mc Connico 230 kV	0.5283	0.0745	1130	1,498	0.5004	73
Peacock - Mead 345 kV	-	Davis - Mc Connico 230 kV	0.5283	-	1130	1,501	0.5057	75
Peacock - White Hill 345 kV	Black Mesa - Topock 230 kV	Davis - Mc Connico 230 kV	0.5283	-0.1326	1130	1,425	0.4956	58
Peacock - White Hill 345 kV	Davis - Mc Connico 230 kV	Round Valley - Peacock 230 kV	0.1595	0.3358	816	891	0.3411	10
Peacock - White Hill 345 kV	Davis - Mc Cullough 230 kV	Davis - Mc Connico 230 kV	0.5283	-0.2679	1130	1,337	0.4569	38
Peacock - White Hill 345 kV	Davis - Mead N 230 kV	Davis - Mc Connico 230 kV	0.5283	-0.2656	1130	1,347	0.4579	40

Table F-1. (continued) 2008 Heavy Autumn – Liberty PST In-Service at 450 MW (s2n).

Contingency1	Contingency2	AFFECTED ELEMENT	Contingency1 %LODF	Contingency2 %LODF	Normal Rating (amps)	Calc Max Post-contingency Loading (amps)	Gen Shift Factor	Gen Reduction Rqmt (MW)
Peacock - White Hill 345 kV	Davis - Topock No.2 230 kV	Davis - Mc Connico 230 kV	0.5283	0.0778	1130	1,501	0.5057	75
Peacock - White Hill 345 kV	Davis - ZORB 230 kV	Davis - Mc Connico 230 kV	0.5283	-0.0745	1130	1,425	0.4956	58
Peacock - White Hill 345 kV	Griffith - Mc Connico 230 kV	Hilltop - Peacock 230 kV	0.1791	0.7856	816	891	0.3411	10
Peacock - White Hill 345 kV	Griffith - Peacock 230 kV	Davis - Mc Connico 230 kV	0.5283	0.2144	1130	1,337	0.4569	38
Peacock - White Hill 345 kV	Hilltop - Mc Connico 230 kV	Davis - Mc Connico 230 kV	0.5283	-0.2319	1130	1,347	0.4579	40
Peacock - White Hill 345 kV	Hilltop - Peacock 230 kV	Davis - Mc Connico 230 kV	0.5283	-0.2319	1130	1,495	0.4999	73
Peacock - White Hill 345 kV	Liberty - Westwing 230 kV	Davis - Mc Connico 230 kV	0.5283	0.0296	1130	1,470	0.5004	68
Peacock - White Hill 345 kV	Mead S - Mead N No.1 230 kV	Davis - Mc Connico 230 kV	0.5283	0.0011	1130	1,446	0.3653	46
Peacock - White Hill 345 kV	Mead S - Mead N No.2 230 kV	Davis - Mc Connico 230 kV	0.5283	0.0011	1130	1,540	0.5797	95
Peacock - White Hill 345 kV	N.Havasu - Topock 230 kV	Davis - Mc Connico 230 kV	0.5283	-0.1242	1130	1,475	0.5402	74
Peacock - White Hill 345 kV	S.Point - Topock No.1 230 kV	Davis - Mc Connico 230 kV	0.5283	0.0000	1130	1,428	0.5402	64
Peacock - White Hill 345 kV	S.Point - Topock No.2 230 kV	Davis - Mc Connico 230 kV	0.5283	0.0000	1130	1,494	0.5080	74
Peacock - White Hill 345 kV	Topock - ZORB 230 kV	Davis - Mc Connico 230 kV	0.5283	0.0745	1130	1,492	0.5057	73
REVERSE ELEMENT OUTAGE								
Black Mesa - Topock 230 kV	Peacock - White Hill 345 kV	Davis - Mc Connico 230 kV	-0.1459	0.5148	1130	1,427	0.4956	59
Black Mesa - Topock 230 kV	Mead 345/230 kV Xfmr	Davis - Mc Connico 230 kV	-0.1459	0.5148	1130	1,427	0.4956	59
Davis - Mc Connico 230 kV	Griffith - Peacock 230 kV	Hilltop - Mc Connico 230 kV	0.5251	1.0000	1130	1,698	1.0000	226
Davis - Mc Connico 230 kV	Mead 345/230 kV Xfmr	Round Valley - Peacock 230 kV	0.2122	0.4008	816	891	0.3411	10
Davis - Mc Connico 230 kV	Peacock - White Hill 345 kV	Round Valley - Peacock 230 kV	0.2122	0.4008	816	891	0.3411	10
Davis - Mc Connico 230 kV	Peacock 345/230 kV Xfmr	Prescott - Yavapai 230 kV	0.1524	0.6876	670	893	0.7120	63
Davis - Mc Connico 230 kV	Peacock 345/230 kV Xfmr	Round Valley - Peacock 230 kV	0.2122	1.0000	816	1,454	1.0000	254
Davis - Mc Connico 230 kV	Peacock 345/230 kV Xfmr	Round Valley - Prescott 230 kV	0.2122	1.0000	816	1,454	1.0000	254
Davis - Mc Cullough 230 kV	Mead 345/230 kV Xfmr	Davis - Mc Connico 230 kV	-0.3162	0.4726	1130	1,338	0.4569	38
Davis - Mc Cullough 230 kV	Peacock - White Hill 345 kV	Davis - Mc Connico 230 kV	-0.3162	0.4726	1130	1,338	0.4569	38
Davis - Mead N 230 kV	Mead 345/230 kV Xfmr	Davis - Mc Connico 230 kV	-0.3235	0.4605	1130	1,347	0.4579	40
Davis - Mead N 230 kV	Peacock - White Hill 345 kV	Davis - Mc Connico 230 kV	-0.3235	0.4605	1130	1,347	0.4579	40
Davis - Topock No.2 230 kV	Mead 345/230 kV Xfmr	Davis - Mc Connico 230 kV	0.0856	0.5198	1130	1,491	0.4999	72
Davis - Topock No.2 230 kV	Peacock - White Hill 345 kV	Davis - Mc Connico 230 kV	0.0856	0.5198	1130	1,491	0.4999	72
Davis - ZORB 230 kV	Mead 345/230 kV Xfmr	Davis - Mc Connico 230 kV	-0.0821	0.5203	1130	1,473	0.5004	68

Table F-1. (continued) 2008 Heavy Autumn – Liberty PST In-Service at 450 MW (s2n).

Contingency1	Contingency2	AFFECTED ELEMENT	Contingency1 %LODF	Contingency2 %LODF	Emergency Rating (amps)	Calc Max Post-contingency Loading (amps)	Gen Shift Factor	Gen Reduction Rqmt (MW)
Davis - ZORB 230 kV	Peacock - White Hill 345 kV	Davis - Mc Connico 230 kV	-0.0821	0.5203	1130	1,473	0.5004	68
Griffith - Mc Connico 230 kV	Mead 345/230 kV Xfmr	Hilltop - Peacock 230 kV	0.7512	0.4719	1130	1,452	0.3653	47
Griffith - Mc Connico 230 kV	Peacock - White Hill 345 kV	Hilltop - Peacock 230 kV	0.7512	0.4719	1130	1,452	0.3653	47
Griffith - Mc Connico 230 kV	Peacock 345/230 kV Xfmr	Hilltop - Peacock 230 kV	0.7512	0.6174	1130	1,284	0.6186	38
Griffith - Peacock 230 kV	Mead 345/230 kV Xfmr	Davis - Mc Connico 230 kV	0.2488	0.4719	1130	1,537	0.5797	94
Griffith - Peacock 230 kV	Peacock - White Hill 345 kV	Davis - Mc Connico 230 kV	0.2488	0.4719	1130	1,537	0.5797	94
Hilltop - Mc Connico 230 kV	Griffith - Peacock 230 kV	Davis - Mc Connico 230 kV	-0.2681	1.0000	1130	1,676	1.0000	217
Hilltop - Mc Connico 230 kV	Mead 345/230 kV Xfmr	Davis - Mc Connico 230 kV	-0.2681	0.4613	1130	1,493	0.5402	78
Hilltop - Mc Connico 230 kV	Peacock - White Hill 345 kV	Davis - Mc Connico 230 kV	-0.2681	0.4613	1130	1,493	0.5402	78
Hilltop - Peacock 230 kV	Griffith - Peacock 230 kV	Davis - Mc Connico 230 kV	-0.2681	1.0000	1130	1,426	1.0000	118
Hilltop - Peacock 230 kV	Mead 345/230 kV Xfmr	Davis - Mc Connico 230 kV	-0.2681	0.4613	1130	1,436	0.5402	66
Hilltop - Peacock 230 kV	Peacock - White Hill 345 kV	Davis - Mc Connico 230 kV	-0.2681	0.4613	1130	1,436	0.5402	66
Liberty - Westwing 230 kV	Mead 345/230 kV Xfmr	Davis - Mc Connico 230 kV	0.0130	0.5296	1130	1,493	0.5080	74
Liberty - Westwing 230 kV	Peacock - White Hill 345 kV	Davis - Mc Connico 230 kV	0.0130	0.5296	1130	1,493	0.5080	74
Mead 345/230 kV Xfmr	-	Davis - Mc Connico 230 kV	0.5283	-	1130	1,501	0.5057	75
Mead S - Mead N No.1 230 kV	Mead 345/230 kV Xfmr	Davis - Mc Connico 230 kV	0.0073	0.5248	1130	1,494	0.5057	73
Mead S - Mead N No.1 230 kV	Peacock - White Hill 345 kV	Davis - Mc Connico 230 kV	0.0073	0.5248	1130	1,494	0.5057	73
Mead S - Mead N No.2 230 kV	Mead 345/230 kV Xfmr	Davis - Mc Connico 230 kV	0.0073	0.5248	1130	1,494	0.5057	73
Mead S - Mead N No.2 230 kV	Peacock - White Hill 345 kV	Davis - Mc Connico 230 kV	0.0073	0.5248	1130	1,494	0.5057	73
N.Havasu - Topock 230 kV	Mead 345/230 kV Xfmr	Davis - Mc Connico 230 kV	-0.1367	0.5159	1130	1,434	0.4972	60
N.Havasu - Topock 230 kV	Peacock - White Hill 345 kV	Davis - Mc Connico 230 kV	-0.1367	0.5159	1130	1,434	0.4972	60
Peacock - Mead 345 kV	-	Davis - Mc Connico 230 kV	0.5283	-	1130	1,501	0.5057	75
South Point - Topock No.1 230 kV	Mead 345/230 kV Xfmr	Davis - Mc Connico 230 kV	0.0000	0.5239	1130	1,494	0.5057	73
South Point - Topock No.1 230 kV	Peacock - White Hill 345 kV	Davis - Mc Connico 230 kV	0.0000	0.5239	1130	1,494	0.5057	73
South Point - Topock No.2 230 kV	Mead 345/230 kV Xfmr	Davis - Mc Connico 230 kV	0.0000	0.5239	1130	1,494	0.5057	73
South Point - Topock No.2 230 kV	Peacock - White Hill 345 kV	Davis - Mc Connico 230 kV	0.0000	0.5239	1130	1,494	0.5057	73
South Point - Topock No.2 230 kV	South Point - Topock No.1 230 kV	Davis - Mc Connico 230 kV	0.0000	0.1886	1130	1,250	0.4137	20
Topock - ZORB 230 kV	Mead 345/230 kV Xfmr	Davis - Mc Connico 230 kV	0.0821	0.5208	1130	1,500	0.5004	74
Topock - ZORB 230 kV	Peacock - White Hill 345 kV	Davis - Mc Connico 230 kV	0.0821	0.5208	1130	1,500	0.5004	74

Table F-2. 2008 Heavy Autumn – Liberty PST By-Passed.

Contingency1	Contingency2	AFFECTED ELEMENT	Contingency1 %LODF	Contingency2 %LODF	Normal Rating (amps)	Calc Max Post-contingency Loading (amps)	Gen Shift Factor	Gen Reduction Rqmt (MW)
Griffith - Peacock 230 kV	Hilltop - Mc Connico 230 kV	Davis - Mc Connico 230 kV	0.2520	1.0000	1130	1,675	1.0000	217
Griffith - Peacock 230 kV	Hilltop - Peacock 230 kV	Davis - Mc Connico 230 kV	0.2520	1.0000	1130	1,430	1.0000	120
Griffith - Peacock 230 kV	Davis - Mc Connico 230 kV	Hilltop - Mc Connico 230 kV	0.7480	1.0000	1130	1,675	1.0000	217
Griffith - Peacock 230 kV	Davis - Mc Connico 230 kV	Hilltop - Peacock 230 kV	0.7480	1.0000	1130	1,430	1.0000	120
Peacock 345/230 kV Xfmr	Griffith - Mc Connico 230 kV	Hilltop - Peacock 230 kV	0.3447	0.8722	1130	1,288	0.6186	39
Peacock 345/230 kV Xfmr	Davis - Mc Connico 230 kV	Round Valley - Peacock 230 kV	0.3436	1.0000	816	1,425	1.0000	242
Peacock 345/230 kV Xfmr	Davis - Mc Connico 230 kV	Round Valley - Prescott 230 kV	0.3436	1.0000	816	1,387	1.0000	227
Peacock 345/230 kV Xfmr	Davis - Mc Connico 230 kV	Prescott - Yavapai 230 kV	0.2354	0.7012	670	998	0.7120	93
REVERSE ELEMENT OUTAGE								
Davis - Mc Connico 230 kV	Griffith - Peacock 230 kV	Hilltop - Mc Connico 230 kV	0.5251	1.0000	1130	1,686	1.0000	221
Davis - Mc Connico 230 kV	Griffith - Peacock 230 kV	Hilltop - Peacock 230 kV	0.5251	1.0000	1130	1,435	1.0000	122
Davis - Mc Connico 230 kV	Peacock 345/230 kV Xfmr	Round Valley - Peacock 230 kV	0.2007	1.0000	816	1,439	1.0000	248
Davis - Mc Connico 230 kV	Peacock 345/230 kV Xfmr	Round Valley - Prescott 230 kV	0.2007	1.0000	816	1,397	1.0000	231
Davis - Mc Connico 230 kV	Peacock 345/230 kV Xfmr	Prescott - Yavapai 230 kV	0.1451	0.6957	670	1,002	0.7120	94
Griffith - Mc Connico 230 kV	Peacock 345/230 kV Xfmr	Hilltop - Peacock 230 kV	0.7480	0.6166	1130	1,563	0.6186	107
Hilltop - Mc Connico 230 kV	Griffith - Peacock 230 kV	Davis - Mc Connico 230 kV	0.2714	1.0000	1130	1,675	1.0000	217
Hilltop - Peacock 230 kV	Griffith - Peacock 230 kV	Davis - Mc Connico 230 kV	0.2714	1.0000	1130	1,428	1.0000	119