ORIGINAL

NEW APPLICATION

0000067504

RECEIVED

2007 MAR -2 P 3:42

AZ CORP COMMISSION
DOCUMENT CONTROL

Application for a Certificate of Environmental Compatibility

Northern Arizona Energy Project

Prepared for:

State of Arizona Power Plant and Transmission Line Siting Committee

Prepared by:

Greystone/Arcadis
630 Plaza Drive #100
Highlands Ranch, Colorado 80129

Submitted by:

Northern Arizona Energy, LLC

Date: _____
Case No. L-00000FF-07-0134-00133

Arizona Corporation Commission
DOCKETED

MAR 02 2007

DOCKETED BY

This Project was originally referred to as the Arroyo Energy Project (Project). It is now known as the Northern Arizona Energy Project (Project or NAEP). This Project was presented to agencies, officials and the public in applicant-sponsored open house and Project forums as the Arroyo Energy Project prior to the name change. The project description has not changed since the initiation of public communication regarding the Project.

BEFORE THE
ARIZONA POWER PLANT AND TRANSMISSION LINE SITING COMMITTEE

In the matter of the Application of Northern Arizona Energy, LLC, in conformance with the requirements of Arizona Revised Statutes 40-360.03 and 40-360.06, for a Certificate of Environmental Compatibility authorizing construction of a 175 MW natural gas-fired, simple cycle generating facility and associated transmission line interconnecting the generating facility to the adjacent Western Area Power Administration Griffith Switchyard, all located in Mohave County approximately 9 miles southwest of Kingman, Arizona.	))))))))))	Case No. _____

APPLICATION FOR
CERTIFICATE OF ENVIRONMENTAL COMPATIBILITY

EXECUTIVE SUMMARY

Northern Arizona Energy, LLC (Applicant) requests a Certificate of Environmental Compatibility (CEC) from the Arizona Power Plant and Transmission Line Siting Committee (Committee) for construction of the Northern Arizona Energy Project (Project), a natural gas fired, simple cycle power plant, located on private lands south of Kingman, Arizona. The Project will supply power to load serving entities in Arizona and surrounding regions for the purpose of serving their customers during periods of peak electricity demand. Power purchases by load serving entities will be voluntary and economic risk will be borne by the Applicant, not the rate-payers.

This Project was originally referred to as the Energy Project (Project). It is now known as the Northern Arizona Energy Project (Project or NAEP). This Project was presented to agencies, officials, and the public in applicant sponsored open house and Project forums as the Arroyo Energy Project prior to the name change. The project description has not changed since the initiation of public communication regarding the Project. This CEC application (Application) focuses on the existing conditions and potential effects for the proposed power plant and related transmission facilities and site. The Applicant is seeking a separate CEC from that of Griffith Energy, LLC (Griffith Owner), the owner and operator of the Griffith Energy Project (Griffith), a 600 MW combined cycle generation facility located adjacent to the Project . This request is critical to the future ownership and financing rights of the Northern Arizona Energy Project. A business combination is pending between LS Power, the upstream owner of Applicant and Griffith Owner, and the Dynegy Corporation. Upon completion of such transaction, operating assets such as Griffith, will be owned by Dynegy and development projects such as the Northern Arizona Energy Project will be separately owned by a Joint Venture of LS Power and Dynegy. Due to this separate ownership structure and the associated unique equity and financing rights and obligations, a separate CEC is required.

Western Area Power Administration (Western) is currently preparing an Environmental Assessment (EA) which will provide detailed analysis of the environmental effects of the electrical interconnection to the Western transmission system. A draft of that EA will be available for the Committee during the review period for this Application.

The Project is comprised of four (4), General Electric (GE) LM6000 PC SPRINT NxGen combustion turbine generators (CTG) with inlet air chillers. The Project will be designed to produce 175 MW of net electrical output with a heat rate of 9975 Btu/kWh (HHV) based upon the design condition ambient temperature of 90 degrees Fahrenheit (°F). The CTGs are capable of rapid start-up, allowing the Project to respond to fluctuations in electric demand within ten (10) minutes.

Emissions from the CTGs will be controlled by a combination of water injection and selective catalytic reduction (SCR) to reduce nitrogen oxides (NOx) emissions and an oxidation catalyst to reduce carbon monoxide (CO) and volatile organic compound (VOC) emissions.

Existing infrastructure for the gas, water and electric interconnections and access roads are available to the Project within its property boundary or the adjacent property containing the existing Griffith. No new laterals or other off-site infrastructure development are required for the Project thereby minimizing the environmental impacts associated with the Project.

Water supply for the Project will be obtained from Griffith Owner through a physical interconnection with the Griffith water treatment and recycling systems. Griffith Owner will allocate a portion of its existing water capacity allotment under contract with Mohave County. Therefore, no additional incremental water supply allocation from the water system currently serving the I-40 Industrial Corridor is required to serve the Project.

The Project will electrically interconnect with the Western 230kV transmission system at the existing 230kV switchyard (Griffith Switchyard) owned and operated by Western. An application for generation interconnection was filed with Western on September 27, 2006 and was determined to be a valid application by Western on September 28, 2006.

Natural gas will be transported to the Project through the existing UNS Arizona Gas (UNS) gas distribution facilities currently serving the I-40 Industrial Corridor.

This application includes evaluation of relevant environmental issues associated with the proposed plant and associated transmission line site and certain related actions. The analysis of the Northern Arizona Energy Project concludes that no significant impacts will result from the Project. This conclusion was reached after analyzing the environmental elements specified in Arizona Corporation Commission Rules of Practice and Procedure R14-3-219.

The Project site was selected for the following reasons:

- The Project is located on private land adjacent to an existing power generation facility and is able to utilize existing infrastructure that was developed for the I-40 Industrial Corridor and the Griffith project.
- The Project location is situated in an area evaluated in previous environmental studies for the Griffith project (Case No. 90, Docket No. L00000H-98-0090, Decision No. 61295).
- The Project is located within the I-40 Industrial Corridor established by the Mohave County Planning and Zoning Department making it in conformance with the Mohave County General Plan and zoning regulations. This industrial corridor has been designated for industrial development and contains highways, railroads, gas pipelines, and electric transmission lines.
- The small amount of water needed for the Project will be supplied from existing water capacity allotments controlled by Griffith Owner; therefore no additional incremental water allotments from the Sacramento Valley aquifer or the I-40 Industrial Corridor water system will be required to serve the Project.
- There is no existing or planned residential development within two miles of the Project site.
- No critical habitat will be affected by the Project, nor will there be any significant impacts to any threatened or endangered species.

The analyses for this application also show that several critical elements or concerns are not present or will not be affected by the siting, construction, and operation of the Project, including: wild and scenic rivers, areas of critical environmental concern (ACEC), wetlands or riparian areas, and solid and hazardous waste.

The analyses also show there will be no significant direct, indirect or cumulative adverse effects on land use, cultural resources, wilderness areas, biological resources, including special interest wildlife and plant species, ground or surface water quality, earth and soil resources, air quality, or noise. Consultation with tribes regarding Native American concerns or traditional cultural properties will continue, but no specific conflicts have been identified. No low income or minority groups will be disproportionately affected.

There will be socioeconomic benefits derived from the Project. In the short-term, the construction work force will increase revenues in the retail and service sectors of the economy. In the long-term, the available power will provide greater reliability of service in area communities. This unique peaking resource with quick start capability will offer ancillary service benefits to the local utilities and the control area to adjust to shifts in demand due to fluctuations in ambient conditions or generation outages scenarios. The Project will require two (2) to four (4) additional operations and maintenance workers. This offers attractive long-term compensation for new personnel resources.

The Applicant therefore requests approval of its application and submits that the Project and its location are environmentally compatible based on the environmental analysis.

TABLE OF CONTENTS

EXECUTIVE SUMMARY ES-1

APPLICATION 1

1. Name and address of the applicant: 1

2. Name, address, and telephone number of a representative of the applicant who has access to technical knowledge and background information concerning this application, and who will be available to answer questions or furnish additional information: 1

3. Date on which the applicant filed a Plan in compliance with ARS §40-360.02, in which the facilities for which this application is made were described: 1

4. Project and Facility Description 2
   - 4.1 Location and Local Conditions 3
     - 4.1.1 Project Location 3
       - 4.1.1.1 Mohave County 3
       - 4.1.1.2 Existing Generation Site 4
       - 4.1.1.3 Site Conditions 4
     - 4.1.2 Legal Description 5
     - 4.1.3 Site Layout and Arrangement 5
     - 4.1.4 Site Access 5
     - 4.1.5 Interior Roads and Fencing 5
     - 4.1.6 Grading and Drainage 6
   - 4.2 Facility Type and Process 6
     - 4.2.1 Combustion Turbine Equipment 6
     - 4.2.2. Air Intake System 6
     - 4.2.3 Emissions Control Equipment 7
     - 4.2.4 Instrumentation and Controls 7
     - 4.2.5 Balance of Plant 7
       - 4.2.5.1 Fuel System 7
       - 4.2.5.2 CTG Cooling 7
       - 4.2.5.3 Inlet Air Chiller 8
       - 4.2.5.4 Water Treatment 8
     - 4.2.6 Interfaces and Shared Services 8
       - 4.2.6.1 Firewater 8
       - 4.2.6.2 Supply Water 8
       - 4.2.6.3 Wastewater 9
       - 4.2.6.4 Electrical Systems 9
   - 4.3 Operations and Emissions 9
     - 4.3.1 Operations Management 9
     - 4.3.2 Operations 10
     - 4.3.3 Emissions Profile 10

4.3.4 Noise Profile 11
4.4 Fuel System 11
4.4.1 Fuel Gas Requirements 11
4.4.2 Fuel Supply and Transportation 12
4.5 Electrical Interconnection 12
4.5.1 Electrical Systems 12
4.5.1.1 Generator Output 12
4.5.1.2 Auxiliary Electric System 12
4.5.2 Electrical Interconnection Systems 13
4.5.2.1 Electric Interconnection Arrangement 13
4.5.2.2 Electric Interconnection Facilities 13
4.6 Water Supply and Use 13
4.6.1 Water Use Requirements 13
4.6.2 Source of Water 14
4.6.3 Water Treatment 14
4.6.3.1 Inlet Air Chiller Module 14
4.6.3.2 Demineralized Water 15
4.7 Wastewater and Stormwater 15
4.7.1 Process Wastewater 15
4.7.2 Sanitary Waste 15
4.7.3 Stormwater Management 15
4.8 Plant Auxiliaries 16
4.8.1 Fire Protection System 16
4.8.2 Ammonia Receiving and Storage System 16
4.8.3 Compressed Air 16
4.8.4 Lighting Systems 16
4.9 Construction 17
4.9.1 Project Cost 17
4.9.2 Project Schedule 17
4.9.3 Engineering, Procurement and Construction Schedule 17
4.9.3.1 Potential Modified Construction Schedule 18
4.9.4 Transportation 18
4.9.4.1 Equipment and Materials 18
4.9.4.2 Labor Force 18

5. Jurisdictions: 18
5.1 Areas of jurisdiction (as defined in ARS §40-360) affected by this site: 18

6. Description of the environmental studies the applicant has performed: 18

EXHIBIT A LOCATION MAP AND LAND USE INFORMATION A-1

EXHIBIT B ENVIRONMENTAL REPORTS B-1

EXHIBIT B-1 AIR QUALITY IMPACT ANALYSIS B1-1

EXHIBIT C AREAS OF BIOLOGICAL WEALTH C-1

EXHIBIT D BIOLOGICAL RESOURCES D-1

EXHIBIT E SCENIC AREAS, HISTORIC SITES AND STRUCTURES, ARCHAEOLOGICAL SITES E-1

EXHIBIT F RECREATIONAL PURPOSES AND ASPECTS F-1

EXHIBIT G CONCEPTS OF TYPICAL FACILITIES G-1

EXHIBIT H EXISTING PLANS H-1

EXHIBIT I ANTICIPATED NOISE/INTERFERENCE WITH COMMUNICATION SIGNALS I-1

EXHIBIT J SPECIAL FACTORS J-1

EXHIBIT J-1 PUBLIC CONTACT LETTERS J1-1

EXHIBIT J-2 PUBLIC RESPONSE LETTERS J2-1

EXHIBIT J-3 MEETING AND PUBLIC NOTICES J3-1

EXHIBIT J-4 FACT SHEET/OPEN HOUSE MATERIALS J4-1

EXHIBIT J-5 PUBLIC COMMENTS AND ISSUES AND PRELIMINARY RESPONSES J5-1

EXHIBIT K TRANSMISSION INTERCONNECTION DESCRIPTION K-1

REFERENCES CITED IN APPLICATION R-1

Figures

Figure 1 Site Location Map 23
Figure 2 Power Plant and Associated Facilities 24
Figure 3 Site Layout of Power Plant 25
Figure 4 Preliminary Grading Plan 26
Figure 5 Electrical One-Line Diagram 27
Figure 6 Griffith Switchyard Interconnection Electrical One-Line Diagram 28
Figure 7 Water Balance Diagram 29
Figure A-1 Project Site, Jurisdiction, and Land Status A-5
Figure A-2 Existing Land Use and Zoning A-6
Figure A-3 Planned Land Use A-7
Figure E-1 KOP Locations E-6

Figure E-2 Photo Simulation E-7
Figure E-3 Photo Simulation E-8
Figure E-4 Photo Simulation E-9
Figure E-5 Photo Simulation E-10
Figure E-6 Key Observation Point 5 ..... E-11
Figure E-7 Key Observation Point 6 ..... E-12
Figure E-8 Key Observation Point 7 ..... E-13
Figure E-9 Key Observation Point 8 ..... E-14
Figure G-1 Artists Rendition of Power Plant G-2
Figure K-1 Proposed Transmission Structure K-2

Tables

Table 4-1 Equipment Sound Power Levels 20
Table 4-2 Project Natural Gas Analysis 21
Table 4-3 Daily And Annual Water Flows [1] 22
Table 4-4 Anticipated Project Schedule 22
Table 4-5 Construction Workforce Projection* 22
Table B-1 Northern Arizona Energy Project Environmental Regulatory Requirements B-2
Table B1-1 National Ambient Air Quality Standards For The Northern Arizona Energy Project B1-2
Table B1-2 Arizona Ambient Air Quality Guideline Screening Values For The Northern Arizona Energy Project B1-2
Table B1-3 Air Emission Estimates For The Northern Arizona Energy Project Mohave County, Arizona B1-5
Table C-1 Special Status Plant Species Found In The Project Vicinity C-1
Table C-2 Special Status Wildlife Species Found In The Vicinity Of The Project C-2
Table D-1 Interrelationships And Characters Of Vegetation Series In The Local Area D-2
Table D-2 Checklist Of Plants Potentially Occurring Within Vicinity Of The Project Site D-4
Table D-3 List Of Wildlife Which May Occur In The Vicinity Of The Project Site D-8
Table H-1 Property Owners Within 5 Miles Of Project H-2
Table I-1 Examples Of Outdoor Day-Night Average Sound Levels In Db Measured At Various Locations I-2
Table I-2 Noise Levels From I-40 Traffic I-2
Table I-3 Noise Levels From Trains On The Burlington Northern Santa Fe Railroad Line I-3
Table I-4 Typical Construction Noise Levels I-4
Table I-5 Predicted Noise Near Construction Activities I-4
Table I-6 Noise Levels Expected From Operation Of The Project Vs. Noise Levels From I-40 ..... I-5

APPLICATION

1. *Name and address of the applicant:*

Northern Arizona Energy, LLC
1735 Technology Drive, Suite 820
San Jose, California 95110

2. *Name, address, and telephone number of a representative of the applicant who has access to technical knowledge and background information concerning this application, and who will be available to answer questions or furnish additional information:*

Ms. Dana Diller (Contractor)
High Energy Resource Services
6410 E Everett Drive
Scottsdale, AZ 85254
(480) 664-8154

With a copy to:

Mr. Kevin R. Johnson
Northern Arizona Energy, LLC
1735 Technology Drive, Suite 820
San Jose, California 95110
Phone 408/572-1300
Facsimile 408/392-9757

3. *Date on which the applicant filed a Plan in compliance with ARS §40-360.02, in which the facilities for which this application is made were described:*

Western Area Power Administration (Western), as the transmission owner and interconnecting utility for NAEP, is undertaking at Applicant's expense a detailed transmission power flow, stability and short circuit analysis (System Impact Study) pursuant to a generation interconnection application dated September 27, 2006 and a System Impact Study Agreement dated December 22, 2006. Western's System Impact Study is a required component of a "Plan" filing pursuant to ARS 40-360.02. The System Impact Study is not expected to be completed by Western, however, for an additional 60-90 days. Consequently, Applicant has been unable to file a complete "Plan" 90 days in advance of filing this Application.

Therefore, an "incomplete Plan" that omits the System Impact Study is being filed concurrently with this Application. Applicant is also concurrently filing a Petition to the Arizona Corporation Commission requesting exercise of its discretion pursuant to ARS 40-360.02(E), for good cause, allowing full consideration of this Application by the Power Plant and Transmission Line Siting Committee notwithstanding the late submission of the Plan information. Applicant is continuing diligent efforts to expedite completion of Western's System Impact Study. Promptly upon its completion, Western's System Impact Study will be filed as a supplement to this Application.

Applicant's preliminary evaluation indicates no transmission system impacts; however, Western's System Impact Study must confirm those conclusions before an interconnection agreement will be offered by Western. If Western concludes that transmission facility modifications will be required as a condition of interconnection of the Project, then Applicant commits that completion of such modifications will be an express condition of the CEC.

4. Project and Facility Description

This Project was originally referred to as the Arroyo Energy Project (Project). It is now known as the Northern Arizona Energy Project (Project or NAEP). This Project was presented to interested agencies, officials and the public in applicant-sponsored open house and Project forums as the Arroyo Energy Project prior to the name change. The project description has not changed since the initiation of public communication regarding the Project. The Northern Arizona Energy Project (Project) is a natural gas fired, simple cycle power plant that will supply power to load-serving entities in Arizona and surrounding regions for the purpose of serving their customers during periods of peak electricity demand. The Project is comprised of four (4), General Electric (GE) LM6000 PC SPRINT NxGen combustion turbine generators (CTG) with inlet air chiller modules. The Project will be designed to produce 175 MW of net electrical output with a heat rate of 9975 Btu/kWh (HHV) based upon the design condition ambient temperature of 90 degrees Fahrenheit (°F). The CTGs are capable of rapid start-up, allowing the Project to respond to fluctuations in electric demand within ten (10) minutes.

Emissions from the CTGs will be controlled by a combination of water injection and selective catalytic reduction (SCR) to reduce nitrogen oxides (NOx) emissions and an oxidation catalyst to reduce carbon monoxide (CO) and volatile organic compound (VOC) emissions. After passing through the SCR system, the exhaust gases exit through the attached stack. Each of the four exhaust stacks will be 85 feet in height and 10 feet in diameter. The stacks will be equipped with continuous emissions monitors (CEMS) and test connections for performance monitoring.

The Project will interconnect with the Western 230kV system at the neighboring existing Griffith Switchyard. There will be one generator step-up (GSU) transformer per CTG pair.

Natural gas will be transported to the Project through the existing UNS gas distribution facilities currently serving the I-40 Industrial Corridor.

Water supply for the Project will be obtained from Griffith Owner through a physical interconnection with the Griffith water treatment and recycling systems. Griffith Owner will allocate 450 gpm of its existing contracted 4500 gpm peak flow capacity under its Water Interconnection and Supply Agreement, dated April 26, 1999 (as amended) with Mohave County. Therefore, no additional incremental water supply allocation from the water system currently serving the I-40 Industrial Corridor is required to serve the Project.

Existing infrastructure for the gas, water and electric interconnections as well as site access roads are available to the Project within its property boundary or the adjacent Griffith property. No new laterals or other off-site infrastructure development are required for the Project, thereby minimizing the environmental impacts associated with the Project.

4.1 Location and Local Conditions

4.1.1 Project Location

The Project is located in Mohave County Arizona, just west of Interstate 40, approximately three (3) miles north of the Griffith Interchange. The Project is approximately 110 miles southeast of Las Vegas, Nevada via Arizona Highway 93 and 200 miles to the northwest of Phoenix, Arizona. The Project is within the existing I-40 Industrial Corridor just north of Griffith.

The Project location is shown on **Figure 1, Site Location Map.**

The Project is located on an approximately forty (40) acre parcel of land (Project Property) that is controlled by the Applicant. The Project Property occupies the northern most seven hundred (700) feet of the original 160 acre parcel of land owned by Griffith Owner (Original Griffith Site) with the exception of a one hundred foot (100') corridor along the eastern Project Property boundary retained by Griffith Owner and containing the gas pipeline serving Griffith.

Within the Project Property, approximately eight (8) acres will be utilized to site the Project equipment, stormwater retention basin and interconnection facilities (Project Site).

The Project Property is zoned MX by Mohave County. This zoning designation permits the siting of industrial facilities, including electric generation facilities. No local land use permits such as conditional use permits or special use permits are required by Mohave County, given the MX zoning of the Project Property.

4.1.1.1 Mohave County

Mohave County, located in the northwest corner of the state, is geographically the second largest county in the state covering 13,470 square miles. The primary commercial centers are the cities of Lake Havasu City and Bullhead City along the Colorado River and Kingman, the County seat. The population of Mohave County has grown from 93,497 in 1990 to 187,200 in 2005 and the population growth rate has been six (6%) to seven (7%) percent over the past few years. Statewide Arizona is growing about four percent (4%) annually. Over the next ten (10) years, the population of Mohave County is expected to, at least, double. Residential and commercial development has expanded rapidly, placing pressure on local load serving entities to obtain adequate generation resources to serve the growing electric load demand.

The single biggest driver of recent growth has been the sudden infusion of large-scale residential housing developments as a result of Las Vegas market forces. The Hoover Dam bypass, scheduled to be finished in 2008, will put Las Vegas within an hour's drive of Mohave County. Developers are betting that workers will choose to commute in order to enjoy affordable housing.

The largest developer in the area is Jim Rhodes, a Las Vegas developer who has four master-planned communities approved and a fifth under consideration - almost 130,000 units in all. Another Las Vegas developer, Leonard Mardian, is planning 35,000 homes. Together, the projects will result in more new houses than exist in all of Mohave County today. Other planned developments in the region include two master-planned communities (the Villages at White Hills and The Ranch at White Hills) totaling in excess of 62,000 lots.

Industrial development in Lake Havasu City, Bullhead City and Kingman has also increased over the past ten years, driven in part by industrial parks located in each area. Additionally, the I-40 Industrial Corridor between Kingman and Lake Havasu offers large industrial tracts to accommodate warehouse-distribution and manufacturing firms that require direct highway access, rail access (Burlington Northern & Santa Fe) or natural gas (two transcontinental pipeline corridors). In fact, Wal-Mart has announced plans to build an 880,000-square-foot distribution center facility in the Corridor, which will bring 500-plus jobs to the Mohave County. Nutribiotechnologies, Inc. is another major planned commercial development in the Corridor.

UNS Electric (formerly Citizens Electric) and Mohave Electric Cooperative are the local load serving entities with UNS Electric serving the majority of the Mohave County loads. Since 1999, the UNS Electric's peak demand in Mohave County has increased over sixty six percent (66%) which represents an annual growth rate of nearly nine and one-half percent (9.5%). Peak loads are forecasted to continue to grow at over six and one-half percent (6.5%) per year for the next eight (8) to ten (10) years. In the fifteen (15) year period from 1999 through 2014, the UNS Electric peak load demand will have grown nearly 400 MW.

Currently there are no generation units in operation dedicated to serving the peak demand of the Mohave County loads.

4.1.1.2 Existing Generation Site

Griffith is a 600 MW natural gas-fired, combined cycle power plant located adjacent to and south of the Project. In 1998, Griffith was sited in the I-40 Industrial Corridor. The entire Original Griffith Site was deemed environmentally compatible for generation resources in a 1998 decision of the Arizona Corporation Commission (Decision # 61295). As noted above, approximately 40 acres of the prior Original Griffith Site comprises the Project Property.

The I-40 Industrial Corridor infrastructure that was developed coincident with the development of Griffith will be utilized for the Project. In addition, Griffith Owner will provide certain services to the Project under a Shared Services Agreement as further discussed in section 4.2.6.

The utilization of existing gas, water and electric infrastructure and services provided by the I-40 Industrial Corridor and the Griffith Owner eliminates almost all of the environmental impacts associated with the Project.

4.1.1.3 Site Conditions

The Project will be designed for the following Project Site conditions.

• Site Elevation Above Sea Level	2475 feet
• Design Ambient Temperature and Humidity	90°F/38.7%
• Design High Temperature	113°F
• Design Low Temperature	25°F
• Seismic	IBC-2003, Class C, I=1.25
• Wind Loads	90 mph

- Frost Penetration 12 inches
- Annual Rainfall 10.4 inches

4.1.2 Legal Description

The Project is located on a parcel of undeveloped land comprising essentially the North seven hundred (700) feet of the North One-half of the Southwest Quarter of Section 6, Township 19 North, Range 17 West, Gila & Salt River Base & Meridian, Mohave County, Arizona, containing approximately forty (40) acres.

4.1.3 Site Layout and Arrangement

The overall Project Site layout is depicted on **Figure 2, Power Plant and Associated Facilities**, and indicates the location and size of the proposed equipment and improvements, including access roads, the gas pipeline and meter station, the 230kV transmission line, the Griffith Switchyard expansion area, the construction lay down area, and a retention basin for storm water management. A more detailed general arrangement of the Project is shown on **Figure 3, Site Layout of Power Plant**.

Project equipment occupies approximately 8 acres. Surrounding the equipment is a network of roads for fire equipment and maintenance access. The area required for the Griffith Switchyard expansion is one (1) acre. The temporary construction area for contractor facilities, construction parking, and equipment and material lay down (Temporary Construction Area) will be located in two (2) designated areas, one west and one east of the Project Site. If the entire designated Temporary Construction Area is utilized, a total of six (6) acres will be used by the contractors.

The Project equipment and facilities have been arranged for optimum use of the Project Property as well as to ensure operability and maintainability. Conceptual engineering has been conducted to define the specific equipment requirements and to confirm the suitability of the proposed Project Site.

4.1.4 Site Access

Access to the Project Site will be via the Griffith interchange of I-40, which travels north-south near the Project. From the Griffith interchange, access to the Project Site will be west on Griffith Road, then approximately two (2) miles north on South Apache Road, then east on Haul Road to the Project Site entrance. Access to the Project will be controlled through a security gate at the Project Site entrance off of Haul Road located along the north boundary of the Project Property.

A separate entrance from Haul Road will be utilized for construction access to the Temporary Construction Area. A separate gate for construction personnel and equipment/material deliveries will allow access to the Temporary Construction Area during the construction of the Project.

4.1.5 Interior Roads and Fencing

The finish surface on roadways and parking areas located within the Project Site will be gravel. Unpaved ground surfaces in and around the main equipment area will be covered with crushed stone or gravel. An 8-foot tall, metal fabric security fence with barbed wire or razor wire on top will enclose the entire Project Site and Temporary Construction Area.

4.1.6 Grading and Drainage

The Project Property slopes down-gradient from northeast to southwest. The entire Project footprint containing the equipment will be raised to provide adequate drainage away from equipment and buildings to the stormwater retention basin (see **Figure 4, Preliminary Grading Plan**). Raising the Project footprint will also provide adequate cover for the culverts. Excavated material from the stormwater retention basin may be used for structural fill depending on the suitability of the excavated material. Approved soil materials for structural fill will be imported, if required. Additionally, specialized granular material may need to be imported for road base and possible use below foundations.

4.2 Facility Type and Process

The Project will consist of four (4) GE LM6000 PC SPRINT NxGen CTGs with an inlet air chiller system. The Project will be designed to produce 175 MW net electrical output with a heat rate of 9975 Btu/kWh (HHV) based upon the design condition ambient temperature of 90° F.

Auxiliary equipment will include inlet air filters with chiller coils, mechanical chiller with cooling module, circulating water pumps, water treatment equipment, natural gas compressors, generator step-up and auxiliary transformers, and water storage tanks. The technical details of the Project components are described below.

4.2.1 Combustion Turbine Equipment

The LM6000 combustion turbines are two-shaft gas turbine engines derived from the core of the CF6-80C2 engine, which is GE's high thrust, high efficiency aircraft engine. The CF6-80C2 engine has logged more than 30,000,000 flight hours in the Boeing 747 and other wide body aircraft.

The CTGs use state-of-the-art technology to efficiently burn clean natural gas with reduced NOx and CO emissions. Each CTG is equipped with water injection to the combustors for reducing the production of NOx. In addition, SCR systems further reduce NOx and CO with a combination of catalysts and injection of 19 percent aqueous ammonia.

Each CTG will also be provided with a SPRINT (SPRay INTer-cooling) system, which enhances the efficiency and output of the gas turbine engine by spraying micro-droplets of atomized water into the inter-stage air stream between the low pressure and high pressure compressors. The water is atomized to a droplet diameter of less than 20 microns by using inter-stage bleed air and special nozzles. As the droplets evaporate, the air temperature is reduced and the mass flow is increased. This results in greater power output and better fuel efficiency.

The CTGs are housed in a metal enclosure to protect the units from the elements and reduce noise.

4.2.2. Air Intake System

The air intake system provides filtered air to the combustion turbine compressors. Mounted above each combustion turbine, the intake system is equipped with a self-cleaning filter system to clean particulates from the air. The system is provided with access for inspection and maintenance. Inlet air chilling will be used to enhance gas turbine performance during times of high ambient air

temperatures. The inlet chilling system consists of heat exchanger coils located in the inlet air stream. Chilled water from a mechanical chiller flows through the coils to cool the incoming air. This results in increased electrical output and improved fuel efficiency for the units.

4.2.3 Emissions Control Equipment

The combustion gases exit the turbine at approximately 830 °F and then pass through the SCR system for NOx emission control and an oxidization catalyst for control of CO and VOC emissions. The SCR system is used in conjunction with ammonia injection for the control of NOx emissions. A 19 percent aqueous ammonia (NH3) solution is injected into the CTG exhaust gas stream, which passes over a catalyst bed that reduces the oxides of nitrogen to inert nitrogen. Diluted ammonia vapor will be injected into the exhaust gas stream via a grid of nozzles located upstream of the catalyst module. The subsequent chemical reaction on the catalyst will reduce NOx to nitrogen and water. The SCR equipment includes a reactor chamber, catalyst modules, ammonia storage system, ammonia vaporization and injection system, and monitoring equipment and sensors. The ammonia unloading area will consist of a curbed concrete pad and containment vault.

After passing through the SCR system, the exhaust gases exit through the attached stack. Each of the four exhaust stacks will be 85 feet in height and 10 feet in diameter. The stacks will be equipped with CEMS and test connections for performance monitoring.

4.2.4 Instrumentation and Controls

GE will provide their standard digital process control system for each CTG. The balance of plant systems will be controlled by a distributed control system (DCS).

The DCS will interface with the control systems furnished by the CTG supplier to provide supervisory remote control capabilities, as well as data acquisition, annunciation, and historical storage of CTG operating information.

4.2.5 Balance of Plant

The balance of plant equipment and systems for the Project are described in the following paragraphs.

4.2.5.1 Fuel System

High pressure natural gas will be supplied to the Project from the existing UNS gas distribution system located adjacent to the Project. A metering station to serve the Project will be located east of the power block. From the metering station, gas will be piped to the gas conditioning and compressor equipment skids. The gas conditioning skids will filter gas particulates and drop out any moisture contained in the gas.

4.2.5.2 CTG Cooling

The generators are air-cooled. The lube oil for the CTGs is cooled by a closed loop water-glycol system with water-to-air (fin fan) coolers.

4.2.5.3 Inlet Air Chiller

The four (4) CTG units are served by one shared inlet air chiller system providing 6500 nominal refrigeration tons of chilled water. The chiller system is comprised of two chillers arranged in a series configuration. Cooling for the chiller is provided by a cooling module located above the chiller skid. Refrigerant utilized for the chiller will be R-123.

4.2.5.4 Water Treatment

The water treatment facilities consist of leased reverse osmosis (RO) and demineralization trailers to supply demineralized water to the CTGs.

The leased demineralizer trailers will be taken off-site for regeneration, and all waste product contained in the trailer is disposed of at off-site facilities by the vendor, in accordance with applicable regulations.

4.2.6 Interfaces and Shared Services

The Project will be integrated with several existing Griffith systems. A description of the integration between the two facilities is presented in the following paragraphs.

4.2.6.1 Firewater

The existing firewater loop at Griffith consists of an electric firewater pump with a diesel backup firewater pump. The firewater pumps discharge into an underground firewater loop that circles Griffith and provides water to fire hydrants and the fire suppression systems. The existing firewater pumps are capable of supplying up to 1,500 gpm at 100 psig of water to the Griffith firewater loop. Based on National Fire Protection Association (NFPA) standards, the Project firewater requirement is five hundred (500) gpm. This firewater flow requirement is significantly less than the capability of the Griffith firewater system. Therefore, the Project can be connected into the Griffith firewater system by extending the firewater loop around the Project Site. Additional fire pumps and storage tanks are not required for the Project. The NFPA standards do not require protection for coincident events at the Project Site and at Griffith.

4.2.6.2 Supply Water

At the design ambient temperature of 90°F, 345 gpm of raw water is required for process water supply. Process water requirements include makeup water to the chiller cooling module and water supply to the mobile water treatment equipment that will be used to make demineralized water for turbine injection for both NOx control and SPRINT power augmentation.

The Applicant will contract for 450 gpm of process water capacity currently contracted by Griffith Owner. This contract volume (peak flow capacity) represents 450 gpm of the original 4500 gpm contracted by Griffith Owner from Mohave County.

The raw water supply to the Project will be pretreated by Griffith. The process water interconnection will be located near the Griffith cooling tower and will consist of a new pipe connection to existing Griffith water supply piping. The water will be pumped from this location to the Project Site, as shown on **Figure 2, Power Plant and Associated Facilities**.

4.2.6.3 Wastewater

Wastewater from the Project will be piped to the existing Griffith wastewater treatment system to maximize water reuse and minimize the overall amount of wastewater produced. The final wastewater effluent will then be directed to the existing Griffith brine disposal pond, using existing equipment. The Griffith brine disposal pond has sufficient storage and evaporating capacity without modification or expansion of the facility or its existing environmental permits to accommodate both the Project's and Griffith's wastewater over the design life of both projects. The routing of the wastewater piping from the Project to Griffith is shown on **Figure 2, Power Plant and Associated Facilities.**

4.2.6.4 Electrical Systems

The existing grounding system at Griffith and at the Griffith Switchyard is presently electrically interconnected as shown on **Figure 5, Electrical One-line Diagram.** To minimize personnel hazards at the Project, a new buried ground grid in the power block area will be electrically interconnected with the existing Western and Griffith grounding systems.

The electrical interconnection is shown on **Figure 6, Griffith Switchyard Interconnection Electrical One-Line Diagram.**

4.3 Operations and Emissions

4.3.1 Operations Management

The Project will provide electric power to the grid when other base load generation can not meet system demands. This typically occurs during periods of peak system electrical load. As a peaking facility, the Project will have the ability to dispatch any combination of the four independent CTGs in an hourly and/or daily start-stop mode. Unit start times are short, with each CTG typically achieving full load output within ten (10) minutes of a unit start. Each CTG will be independently controlled from approximately 50 to 100 percent of full load.

The Applicant will contract with the Griffith Owner for operations and maintenance (O&M) services. It is anticipated that the existing Griffith O&M personnel will be increased by two (2) to four (4) individuals to support Project operations and maintenance.

Minor Project maintenance will be provided by existing Griffith O&M personnel and major maintenance activities will be supported by contracted labor services or original equipment manufacturers personnel.

The Project will be operated from the existing Griffith control room. The combustion turbines and balance-of-plant systems will incorporate state-of-the-art monitoring and control systems. The Project will be designed to operate independently of the operational status of Griffith, although to optimize operations efficiency, certain Project balance-of-plant equipment (e.g. make-up water/wastewater processes and fire water systems) will be integrated with existing Griffith systems and operations.

4.3.2 Operations

The Project has been designed to supply energy to the customer within ten (10) minutes of a unit start up. Given this quick start capability and the associated operating performance and fuel efficiency of simple cycle technology, the Project will serve the peak load requirements of customers in Mohave County, Arizona loads, and surrounding regional load centers.

The Project design performance is presented as follows.

Condition	Temperature (F)	Relative Humidity (%)	Net Plant Output (MW)	Net Plant Heat Rate (Btu/kWh) (HHV)
Design Basis	90	38.7	175.2	9,975
High Temperature Day	113	16.5	174.3	10,029
Average Ambient Conditions for maximum 5000 annual operating hours	80	40.6	176.7	9,892

The amount of operating hours and startups for any individual simple cycle unit is dependent on (i) the location, (ii) the load profiles of the customer, (iii) fuel prices, and (iv) the general power market supply and demand conditions. A typical operating profile for a simple cycle turbine will be 1500-3000 operating hours and 150-250 start-ups per year. The actual annual operating hours and startups of the Project will be determined by the economic dispatch of each unit as determined by customer needs. In order to present realistic worst case environmental impacts given the simple cycle gas-fired technology proposed for this Project, nominal annual hours of 5000 and 300 starts for each of the four (4) units will be evaluated.

4.3.3 Emissions Profile

The Project is filing an application for an air permit from the Arizona Department of Environmental Quality (ADEQ). The information below is a summary of the information contained in that application.

The proposed emission limits for the Project are as follows:

- NOx 5.0 ppm dry volume (ppmdv) @ 15% O_2
- CO 6.0 ppmdv @ 15% O_2
- VOC 5.0 ppmdv @ 15% O_2
- PM_{10} 2.7 pounds per hour (lb/hr)

As discussed above, the Project will control NOx through water injection into the CTG and through the use of an SCR system. CO and VOC emissions will be controlled through the use of an oxidation catalyst. SO_2 and PM_{10} emissions are controlled through the use of pipeline quality gas.

The Project will comply with annual emission limits prescribed for a minor air emission source. The Project will be subject to the annual emission limits that will be at, or below, the following levels:

- NOx 40 tons per year
- CO 100 tons per year
- VOC 40 tons per year
- SOx 40 tons per year
- PM_{10} 15 tons per year

The Project will be operated within these annual emission limits and the Applicant will seek to maximize operating flexibility with respect to full load, part load operating hours and startup and shutdown emissions within these annual emission limits.

4.3.4 Noise Profile

The primary noise sources anticipated with this Project include the CTG inlet, the CTG compartments, the exhaust ductwork, the stack, gas compressors, and the cooling water module. Secondary noise sources are anticipated to include the GSU transformers and miscellaneous pumps, fans, and compressors. All equipment sound levels were estimated based on available data from the equipment manufacturers. Equipment purchased for the Project will be specified for equivalent "A" weighted sound pressure levels not to exceed 85 dBA at 3-feet. Should the purchased equipment have sound levels that exceed OSHA permissible noise limits (CFR 29, 1910.95), administrative or engineering controls will be utilized, such as personal protective equipment.

The sound level power level (PWL) for each equipment noise source is listed in **Table 4-1, Equipment Sound Power Levels**. These equipment sound level specifications are provided from the vendors based on standard packaged equipment.

A noise analysis was conducted to determine any potential noise impact from the Project. The noise analysis is presented in **Exhibit I**.

4.4 Fuel System

High-pressure natural gas will be supplied to the Project from any combination of the El Paso Natural Gas Company (El Paso), Questar Corporation (Questar), and Transwestern Pipeline Company (Transwestern) natural gas interstate pipelines to the UNS local gas distribution system located adjacent to the Project Site. A new UNS-owned metering station will be constructed adjacent to the existing UNS metering station serving Griffith. From this new metering station, gas will be piped to the gas compressor and conditioning equipment skids. The gas conditioning skids will filter gas particulates and drop out moisture contained in the gas. The natural gas system line pressure is expected to be 600 psig at the Project Site boundary. Gas compressors will increase the natural gas supply pressure for the CTGs to approximately 675 psig. Pressure reduction and control valves are used to feed gas to the CTGs.

4.4.1 Fuel Gas Requirements

The Project will utilize an average of approximately 1,750 Million British Thermal Units (MMBtu) (HHV) of gas per hour; 28,000 MMBtu per 16-hour day, and 42,000 MMBtu per 24-hour day.

Assuming a conservatively high 5,000 annual operating hours for each unit, the Project will utilize 8,750,000 MMBtu of gas per year.

4.4.2 Fuel Supply and Transportation

Natural gas will be delivered via two existing UNS-owned and operated gas pipelines that interconnect with the El Paso, Questar and Transwestern interstate pipelines and transport natural gas to the I-40 Industrial Corridor. Both pipelines terminate at an existing gas regulating/metering station located at the northeast corner of the Original Griffith Property.

The Project will interconnect with both UNS laterals just upstream of the existing UNS gas regulating/metering station. The two pipelines will be tied to a new gas metering station, and will be routed to the Project via an approximate 1,000 foot gas pipeline. Fuel gas compressors will boost the pressure to 675 psig and a fuel gas conditioning system will assure adequate gas quality prior to the gas being fed to the CTGs. The representative natural gas analysis, provided by the El Paso and Transwestern, is shown on **Table 4-2, Project Natural Gas Analysis.** All gas interconnection facilities are contained within the boundaries of the Project Property.

Each UNS pipeline lateral has a gas transportation capacity of a minimum of 6,250 MMBtu per hour or 150,000 MMBtu per day for a total UNS system capacity of over 12,500 MMBtu per hour or 242,000 MMBtu per day.

4.5 Electrical Interconnection

4.5.1 Electrical Systems

The Project is designed to interconnect with the Western 230kV transmission system at the neighboring existing Griffith Switchyard. The overall electrical one-line diagram for the Project is shown on **Figure 5, Electrical One-Line Diagram**.

4.5.1.1 Generator Output

Each CTG will have an associated 13.8kV generator switchgear module. Each switchgear bus will have a generator circuit breaker, an auxiliary circuit breaker, and a direct connection to a three-winding GSU transformer. The Project will have two (2) 230-13.8kV three-winding GSUs, which will each be connected directly to two CTG switchgear buses. The high-voltage side of the GSU transformers will connect to the 230kV Griffith Switchyard via overhead transmission lines.

4.5.1.2 Auxiliary Electric System

A 4160V electrical enclosure will house the 4160V motor control center (MCC) along with two 480V MCCs. The 4160V electrical enclosure will have two associated 13.8-4.16kV unit auxiliary transformers feeding the double-ended 4160V MCC and two associated 4160-480V station service transformers to feed the two 480V MCCs.

A 480V electrical enclosure will house the 480V switchgear DCS, and battery and uninterrupted power supply (UPS) system. The 480V electrical enclosure will have two associated 4160-480V station service transformers to feed the double-ended 480V switchgear.

Power for starting the CTGs will be provided to the 480V level by back-feeding power from the Griffith Switchyard via the Project's GSUs and auxiliary transformers.

4.5.2 Electrical Interconnection Systems

The Project connects to the Western 230kV transmission system at the existing Griffith Switchyard. The Griffith Switchyard is owned and operated by Western. The electrical output of each generator will connect to the low-voltage winding of a generator step-up (GSU) transformer used to convert generator output voltage of 13.8kV to the transmission system voltage of 230kV. The high-voltage side of the GSU transformers is connected to the 230kV Griffith Switchyard via two overhead transmission lines. The electrical one-line diagram of the Griffith Switchyard expansion to accommodate the Project is shown on **Figure 4-6, Griffith Switchyard Interconnection Electrical One-Line Diagram.**

4.5.2.1 Electric Interconnection Arrangement

The entirety of the electric interconnection with the Western system occurs within the Project Property or the Original Griffith Property. The interconnection of the Project requires two new 230kV transmission lines that will be constructed within the Project Property and will connect the high-side of the GSU transformers to the expanded Griffith Switchyard. The Griffith Switchyard consists of twelve 230kV circuit breakers arranged in a breaker-and-a-half configuration. The interconnection of the two new transmission lines associated with the Project requires the addition of a new breaker-and-a-half bay consisting of three new 230kV circuit breakers with associated isolation switches. This expansion of the Griffith Switchyard will require additional property (approximately one (1) acre) to be deeded to Western ownership.

4.5.2.2 Electric Interconnection Facilities

The Project's electric transmission lines, constructed on the Project Property, will be constructed with double circuits on tubular steel poles. The poles will be 100 to 120 feet tall with three arms on each side, approximately 17 feet apart to support the conductors and a smaller arm on each side above the conductor arms to support the overhead ground wires used for lightning protection.

4.6 Water Supply and Use

4.6.1 Water Use Requirements

Water uses include pretreated water for makeup to the chiller cooling module, service water, and demineralized water for NOx control and SPRINT power augmentation.

The Project minimizes water consumption and wastewater generation by integrating with the water treatment and wastewater treatment equipment of Griffith.

One design approach to minimize water use is to capture and recycle the condensate created by the CTG inlet air chillers. Depending on temperature and humidity, the condensate flow available from the inlet coils can be up to 25 gpm.

At design conditions, assuming that no chiller condensate is recovered, the maximum total raw water requirement is 370 gpm, or 355,200 gallons per day (gpd) based upon 16 hours of operation. With

consideration of condensate recovery, the maximum total raw water requirement is 345 gpm or 331,200 gpd based on 16 hours of operation.

The Project water balance is presented in **Figure 7, Water Balance Diagram** and indicates the various process water flow streams for an average operating day. **Table 4-3, Water Use and Wastewater Production** lists the water and wastewater flows for several design conditions.

4.6.2 Source of Water

The existing I-40 Industrial Corridor Water System owned by Mohave County is capable of supplying a minimum of 5,000 gpm of water from the Sacramento Valley aquifer. The system consists of six (6) groundwater wells approximately 1200-1400 feet in depth, a water pipeline collection and distribution system and a 1.3 million gallon storage tank located north of the Project Site.

The Griffith Owner contractual volume (peak flow capacity) under a Water Interconnection and Supply Agreement with Mohave County is 4500 gpm, of which 450 gpm will be allocated to the Project. The expected water use rate for the Project is 345 gpm and the water demand under extreme temperature conditions (113°F) is 380 gpm, thus allowing for a 30 percent water supply capacity margin over expected conditions and nearly a 20 percent margin during extreme temperature conditions. The groundwater allocation from the Sacramento Valley aquifer and the capacity contracted in combination by Griffith Owner and Applicant remain unchanged as a result of the Project.

4.6.3 Water Treatment

4.6.3.1 Inlet Air Chiller Module

The cooling module will provide heat rejection for the centrifugal chiller used to supply chilled water to the air inlet coils. Makeup water will be pre-treated water from Griffith. The circulating water will be continuously treated and controlled in order to achieve approximately 6 cycles of concentration. The 6-cycle limit is determined by the silica concentration of the water.

Makeup water will replace water lost from evaporation, drift, and blowdown. A chemical feed system will supply water-conditioning chemicals to the circulating water to minimize corrosion and control the formation of mineral scale and bio-fouling. Sulfuric acid will be fed into the circulating water system in proportion to makeup water flow for alkalinity reduction to control the scaling tendency of the circulating water. The acid feed equipment will consist of a bulk sulfuric acid storage tank and two full-capacity sulfuric acid metering pumps.

To further inhibit scale formation, an alkaline scale inhibitor solution will be fed into the circulating water system in an amount proportional to the circulating water blowdown flow. The scale inhibitor feed equipment will consist of a chemical solution bulk storage tank and two full-capacity scale inhibitor metering pumps.

To prevent bio-fouling in the circulating water system, a sodium hypochlorite solution will be fed into the system. The hypochlorite feed equipment will consist of a bulk storage tank and two full-

capacity hypochlorite metering pumps. Two full-capacity metering pumps will be provided for feeding either stabilized bromine or sodium bromide as supplemental biocides.

4.6.3.2 Demineralized Water

The water injected into the CTG for NOx control and SPRINT power augmentation must be free of contaminants. Pretreated water from Griffith will be filtered and further treated by RO trailers located on the Project Site. The product water from the RO trailers is sent through demineralizer trailers and then to a demineralized water storage tank. The leased demineralizer trailers are taken off-site for regeneration and all waste product is disposed of off-site by the trailer vendor at licensed commercial facilities in compliance with applicable regulations.

4.7 Wastewater and Stormwater

4.7.1 Process Wastewater

Project process wastewater disposal will be integrated with the Griffith wastewater system. Project wastewater will be routed through the Griffith wastewater recovery and treatment system and process reject wastewater will sent to the existing Griffith brine disposal pond.

There will be process wastewater streams from the Project's RO system and chiller cooling tower. The wastewater will be sent to the Griffith wastewater treatment system where 80 percent of the water is recovered and sent to the Griffith cooling tower. This leaves 20 percent of the stream as the wastewater flow to the brine evaporation pond. As shown in **Table 4-3, Water Use and Wastewater Production**, the maximum flow to the pond while operating is 29,000 gpd (20.1 gpm). However, the average annual flow is 11 gpm based on the conservatively high operating assumptions presented above. The Project will also generate a negligible waste stream from plant drains, consisting of equipment wash-down water and the minor condensation streams from the compressed air and continuous emissions monitoring systems (CEMS). These drains will be directed to the oil/water separator, and then discharged to the Griffith wastewater system. Wastewater generated from CTG compressor washing will be collected in an underground tank before it is trucked off-site for disposal at a licensed facility.

4.7.2 Sanitary Waste

The Project personnel will utilize the existing Griffith sanitary facilities with no increase in design capacity required for the additional personnel. During periodic major maintenance events, portable facilities will be provided to accommodate the additional maintenance workers.

4.7.3 Stormwater Management

On-site stormwater runoff will be routed to the west of the power block by means of swales, ditches and sheet flow. However, where space restriction precludes the use of open ditches and channels, a series of pipes and inlets will be used. Culverts will be used to carry stormwater under on-site traffic areas. Stormwater runoff will discharge by gravity from the power block area to a one (1) acre stormwater retention basin located to the west of the power block to prevent storm water from leaving the Project Site. Offsite runoff will be routed around the Project Site using berms and ditches.

4.8 Plant Auxiliaries

The Project auxiliary systems include fire protection, aqueous ammonia, compressed air, and lighting as described in the following paragraphs.

4.8.1 Fire Protection System

The Project includes an underground firewater loop interfaced with the Griffith firewater system. There will be two connections to two different portions of the Griffith firewater loop. The Project does not require on-site storage of firewater since it will be served from Griffith.

The CTG enclosures are protected by a carbon dioxide (CO_2)-based fire suppression system as supplied by the manufacturer, which includes heat and natural gas detection devices.

The oil-filled transformers are isolated from adjacent equipment and structures using physical separation and/or firewalls. The auxiliary transformers are supplied with dielectric fluids. Each transformer also resides within a concrete containment area that serves to:

- Contain oil spills.
- Retain direct contact stormwater that may potentially come in contact with transformer oil.
- Retain firewater that will come into contact with transformer oil.

The fire protection system will be designed per NFPA standards, utilizing equipment approved by Underwriter's Laboratories/Factory Mutual Research Corp (UL/FM).

4.8.2 Ammonia Receiving and Storage System

The aqueous ammonia system provides for the receipt, storage, and delivery of 19 percent aqueous ammonia to the SCRs to reduce NOx emissions. Aqueous ammonia will be delivered to the Project Site via tanker trucks and deposited in an aboveground 10,000 gallon storage tank. Aqueous ammonia is then pumped to each SCR where it is sprayed into the CTG exhaust flow up stream of the NOx catalyst to reduce plant emissions. The Project's ammonia system will not be integrated with Griffith.

4.8.3 Compressed Air

The compressed air system provides both service air and instrument air throughout the Project. Service air is used primarily for maintenance activities. The instrument air system is used for the operation of control systems, primarily pneumatic valves. Three 50 percent capacity compressors will be provided for the Project. The existing compressed air system at Griffith will not be integrated with the Project.

4.8.4 Lighting Systems

Outdoor area lighting for the Project will consist of permanently mounted fixtures secured to structures, equipment, walls and poles as required providing access lighting for plant operations and maintenance. This lighting will consist of efficient, high-pressure sodium (HPS) fixtures located

throughout the facility, mounted on pendants, poles, stanchions, building columns, or walls. Outdoor lights will be automatically controlled by photocells with manual override capability.

The outdoor lighting system will be designed to provide nighttime lighting levels consistent with the Illuminating Engineering Society (IES) standards to allow basic operator movement throughout the power block. All outdoor lighting shall meet the requirements of the city of Kingman, Arizona Municipal Code Chapters 5 (Buildings, Building Regulations and Codes) Chapter 9 (Utilities); Street Regulations Section 3-9 (Street Lighting); and Zoning Ordinance Section 34 (Outdoor Lighting Code).

4.9 Construction

The Project will be constructed by a primary contractor who will perform the engineering, procurement, and construction (EPC) of the Project. The EPC contractor will typically be responsible for the complete design of the Project, procurement of equipment and permanent materials, construction of all civil works, foundations and structures, and startup and checkout of the generation facility. Up to six (6) acres of the Project Property will be dedicated as the Temporary Construction Area and will serve as space for construction trailers and parking as well as a laydown and storage area for equipment and materials used by the EPC contractor.

The design and construction of the extension of the Griffith Switchyard will be performed by Western. Similarly modifications to the UNS gas distribution system to add a new gas metering facility for the Project will be performed by UNS. No modifications to the I-40 Industrial Corridor Water System will be required.

4.9.1 Project Cost

The cost of the Project is estimated to be in the range of $140 to $160 million. The cost includes the CTGs, gas compressors, transformers, chiller, gas, water and electric transmission interconnection facilities and all ancillary balance of plant equipment as well as all civil works, construction labor, construction materials, and engineering. In addition, the Project cost includes the cost estimates for gas and electric interconnections performed by the interconnecting utilities and Applicant's costs for development, insurance and financing.

4.9.2 Project Schedule

4.9.3 Engineering, Procurement and Construction Schedule

The field construction schedule from site mobilization to commercial operation for a four (4) unit simple cycle project is typically nine (9) to twelve (12) months. Depending on equipment fabrication and delivery durations, detailed engineering and procurement activities are initiated up to twelve (12) months in advance of site mobilization to assure that equipment deliveries occur to support the construction schedule. Market conditions can impact both the equipment lead times and the construction labor availability thus extending EPC schedules.

The key Project schedule milestones are presented in **Table 4-4, Anticipated Project Schedule**.

4.9.3.1 Potential Modified Construction Schedule

Depending on market conditions, the Project may be constructed in a two-phased construction sequence with two (2) units being advanced to construction immediately upon the receipt of environmental approvals and completion of power purchase agreements and the second two (2) units constructed within five (5) years of receipt of environmental approvals.

4.9.4 Transportation

All equipment, permanent materials, and commodities for the Project will be transported to the site via state and interstate highways which are designed for an AASHTO truckload designation of HS_20. The roads and bridges can accommodate the heaviest anticipated equipment component for the Project. Heavy haul trucks with multiple axles will be employed to distribute loads, as required. All equipment and material deliveries will utilize the Project Site access.

4.9.4.1 Equipment and Materials

Truck deliveries of equipment and materials will occur from the initial construction notice to proceed through the entire duration of the Project. Initial truck deliveries will include haul trucks for importing engineered fill materials, as required, followed by concrete trucks for installation of major foundations, and deliveries of reinforcing steel. Piping materials for buried piping will be delivered to Project Site early in the construction period corresponding to approximately the time frame for foundation installation. Deliveries of large major equipment will commence at about midpoint of the construction period.

4.9.4.2 Labor Force

The monthly construction labor force requirements for the Project are presented on **Table 4-5, Construction Workforce Projection.** This projection includes all personnel required to complete construction of the Project including overall Project and site management, laborers, skilled craft, and startup personnel. Skilled craft and laborers will be drawn from the local area with construction management and startup functions provided by relocated personnel from the EPC contracting firm.

5. Jurisdictions:

5.1 Areas of jurisdiction (as defined in ARS §40-360) affected by this site:

The Project is located wholly within Mohave County on private lands within the I-40 Industrial Corridor. The Project Property is zoned MX by Mohave County. This zoning designation permits the siting of industrial facilities, including electric generation facilities. No local land use permits such as conditional use permits or special use permits are required by Mohave County, given the MX zoning of the Project Property. Although not jurisdictional agencies, the Cities of Kingman, Lake Havasu City, and Bullhead City are also being consulted because they are the largest municipalities in the county.

6. Description of the environmental studies the applicant has performed:

The Applicant has engaged several experienced consultants who have conducted field studies and impact evaluation of the Project Property. Under the direction of Western, studies are also being

conducted for the preparation of the Environmental Assessment (EA) to evaluate the interconnection of the Project to their electrical system. This EA will be submitted as supporting documentation for this application when completed. To the extent that the Western environmental process identifies the need for mitigation measures, they will be included as needed to minimize or eliminate impacts.

Evaluation of the existing environment was conducted for land use, air quality, visual resources, soils, biological resources, cultural resources, noise, and socioeconomics. Potential environmental effects of implementation of the Project were also assessed.

Environmental studies of the Project area began with the collection of existing environmental data including literature, maps, and other agency data. Interviews were conducted with appropriate agencies and organizations. Scoping to identify issues was conducted with the public and interested agencies. Field studies on the Project Property were conducted by several resource specialists.

Potential environmental effects were determined by comparing the Project and the existing environment. The results of these studies are included in **Exhibits A through F and I.**

Several individuals and agencies were contacted to solicit input on the Project. These are identified in **Exhibit H** and various agencies and individuals have provided written comments on the Project. A copy of the Public Contact letters is provided in **Exhibit J-1** and Public Response letters are provided in **Exhibit J-2. Exhibit J-3** is a copy of the meeting and Public Notices and **Exhibit J-4** is the Project Fact Sheet. **Exhibit J-5** contains the Applicant's responses to the issues that have been raised.

The analysis of the Northern Arizona Energy Project determined that the following critical elements are not present or will not be affected by the proposed action: wild and scenic rivers, areas of critical environmental concern (ACEC), wetlands or riparian areas, ground or surface water quality, floodplains, and hazardous or solid wastes.

Analysis indicates there will be no significant direct, indirect, or cumulative impacts on land use, cultural resources, wilderness, and biological resources including any species of special concern, socioeconomics, earth resources, air quality, or noise at the Project Property. Analysis and consultation concerning Native American concerns or traditional cultural properties is being conducted as part of the EA. Analysis of environmental justice determined that no low income or minority populations will be disproportionately affected.

TABLE 4-1 EQUIPMENT SOUND POWER LEVELS	
Noise Source	**dBA**
Air Compressor Skid	103
Air Inlet Filter House	94
Ammonia Forwarding Pumps	98
Ammonia Injection Skid	98
Ammonia Vaporizer	98
Auxiliary Skid	103
Auxiliary Transformer	89
Chiller skid	103
Cooling / Purge Air Fans	95
Demineralized Water Pumps	98
Fuel Gas Compressors	109
Fuel Gas Regulator Skid	99
Generator Enclosure Walls	95
Generator Exhaust Silencer, Damper & Exit	94
Generator Vent Fan Motor & Shell Surfaces	88
Rooftop Ventilation Fans	88
Selective Catalytic Reduction Unit	100
Step-Up Transformer	99
Turbine Enclosure Walls	98
Turbine Exhaust Duct Casing	97
Turbine Exhaust Stack	133
Turbine Lube Oil Cooler (fin-fan)	104
Turbine Vent Fan Discharge	93
Turbine Vent Surfaces	96
Wastewater Forwarding Pumps	98

TABLE 4-2 PROJECT NATURAL GAS ANALYSIS	
Higher Heating Value	1,016.0 Btu/scf 22,667 Btu/lb
Lower Heating Value	915.5 Btu/scf 20,425 Btu/lb
Specific Gravity	0.5857
H-C Molar Ratio	3.9449
Inerts-HC Mass Ratio	0.0503
Molecular Weight	16.934
Spec. Heat (Cp), Btu/lb-F	0.5180
Water Vapor, lb/MMscf	< 7
Sulfur (total), grains/100scf	< 5
Hydrocarbon Dew Point, F	< 20
Temperature °F	40 to 120
Chemical Compounds	**Composition, % by Vol**
Methane	96.07
Ethane	1.49
Propane	0.33
Iso Butane	0.06
Norm Butane	0.06
Iso Pentane	0.02
Norm Pentane	0.01
Hexanes plus	0.03
Carbon Dioxide	1.69
Nitrogen	0.24
Hydrogen	0.00
Helium	0.00
Oxygen	0.00

TABLE 4-3 DAILY AND ANNUAL WATER FLOWS [1]				
	Peak Day [2] 1000 gpd	Summer Day [3] 1000 gpd	Expected Year[4] Acre-ft/yr	Max Year[5] Acre-ft/yr
Raw Water Use				
Cooling Module Makeup	227	145	70	81
Demineralizer System	389	260	125	250
Service Water	4	3	1	3
Recovered Wastewater	(116)	(77)	(37)	(66)
Net Water Use	**504**	**331**	**159**	**268**
Wastewater Flows				
Cooling Module Blowdown	44	28	13	17
RO System Rejects	97	65	31	63
Plant Drains	4	3	1	3
Recovered Wastewater	(116)	(77)	(37)	(66)
Net Wastewater to Pond	**29**	**19**	**8**	**17**

Notes:
1) All flows are for four (4) units operating at base load.
2) Peak Day is 24-hour operation with 12 hours at the peak temperature (113°F) and 12 hours at the design condition temperature (90°F).
3) Summer Day is 16 hours at the design condition temperature (90°F).
4) Expected year is based on 2,500 hours of operation per CTG at the design operating temperature (90°F).
5) Max Year is based on 5,000 hours of operation per CTG at the average operating temperature (80°F).
6) Assuming no chiller condensate recovery, the net water use is 355,200 gpd.

TABLE 4-4 ANTICIPATED PROJECT SCHEDULE	
Action	**Date**
Submit Application for CEC	February 2007
All Permits Complete	October 2007
Onsite Construction Starts (earliest)*	4th Quarter 2007*
Commercial Operation (earliest)*	May 2008*

** Depending on market conditions*

TABLE 4-5 CONSTRUCTION WORKFORCE PROJECTION* Months After Construction Notice to Proceed										
	1	2	3	4	5	6	7	8	9	10
Power Block Workforce	34	80	115	132	138	138	132	115	80	34
Substation Expansion Workforce		10	30	30	10					
Total	**30**	**90**	**145**	**162**	**148**	**138**	**132**	**115**	**80**	**34**

** Includes construction management, laborers, skilled craft, and start-up personnel.*

Legend

Northern Arizona Energy Project Boundary

I 40 Industrial Corridor Boundary

N W E S

0 250 500 1,000 Meters

0 500 1,000 2,000 3,000 4,000 Feet

NORTHERN ARIZONA ENERGY PROJECT

Figure 1
Site Location Map

ANALYSIS AREA: MOHAVE COUNTY, ARIZONA	
Date: 02/15/2007	File: 2516/Site.mxd
Created By: JG	Layout: Site.pdf

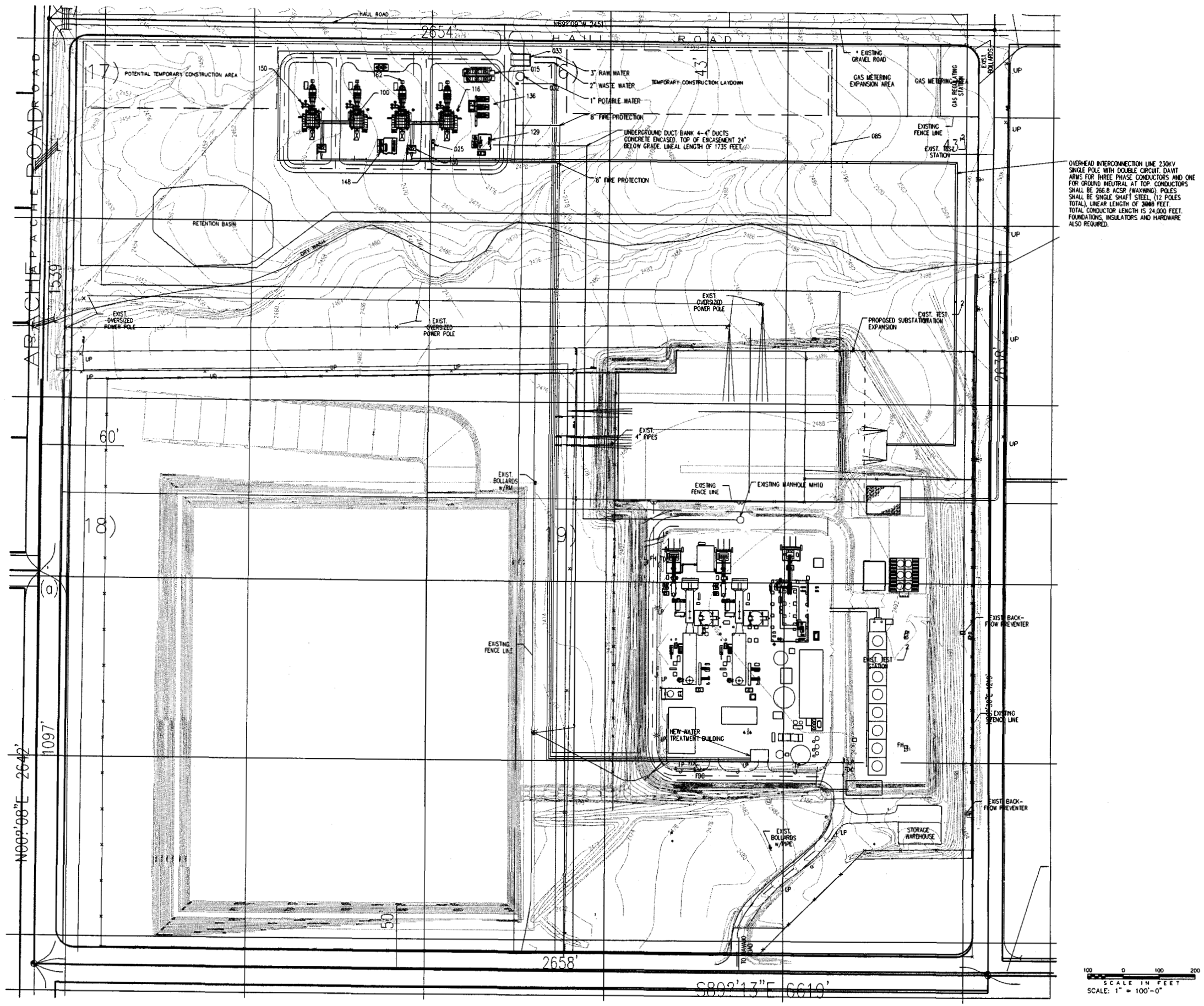

015 CHILLER WITH COOLING TOWER
025 FUEL GAS FILTER SEPARATOR
032 DEMIN STORAGE TANK
033 DEMIN TRAILER PAD
085 SITE FENCE
100 LM6000 GAS TURBINE/GENERATORS
116 OIL/WATER SEPARATOR
129 4,160V SWITCHGEAR/AUX TRANSFORMER
130 CTG STEP-UP TRANSFORMERS, 3 WINDING
136 GAS COMPRESSORS
148 480V STATION SERVICE TRANSFORMERS
150 HOT SCR AND STACKS
162 CEMS

NORTHERN ARIZONA ENERGY PROJECT

Figure 2
Power Plant and Associated Facilities

ANALYSIS AREA: MOHAVE COUNTY, ARIZONA	
Date: 02/12/07	File: 2006-053-PP-100Drev0 For CEC 01-18-07.dwg
Drawn By: ETC	Layout: 001

Source: Bibb Engineering

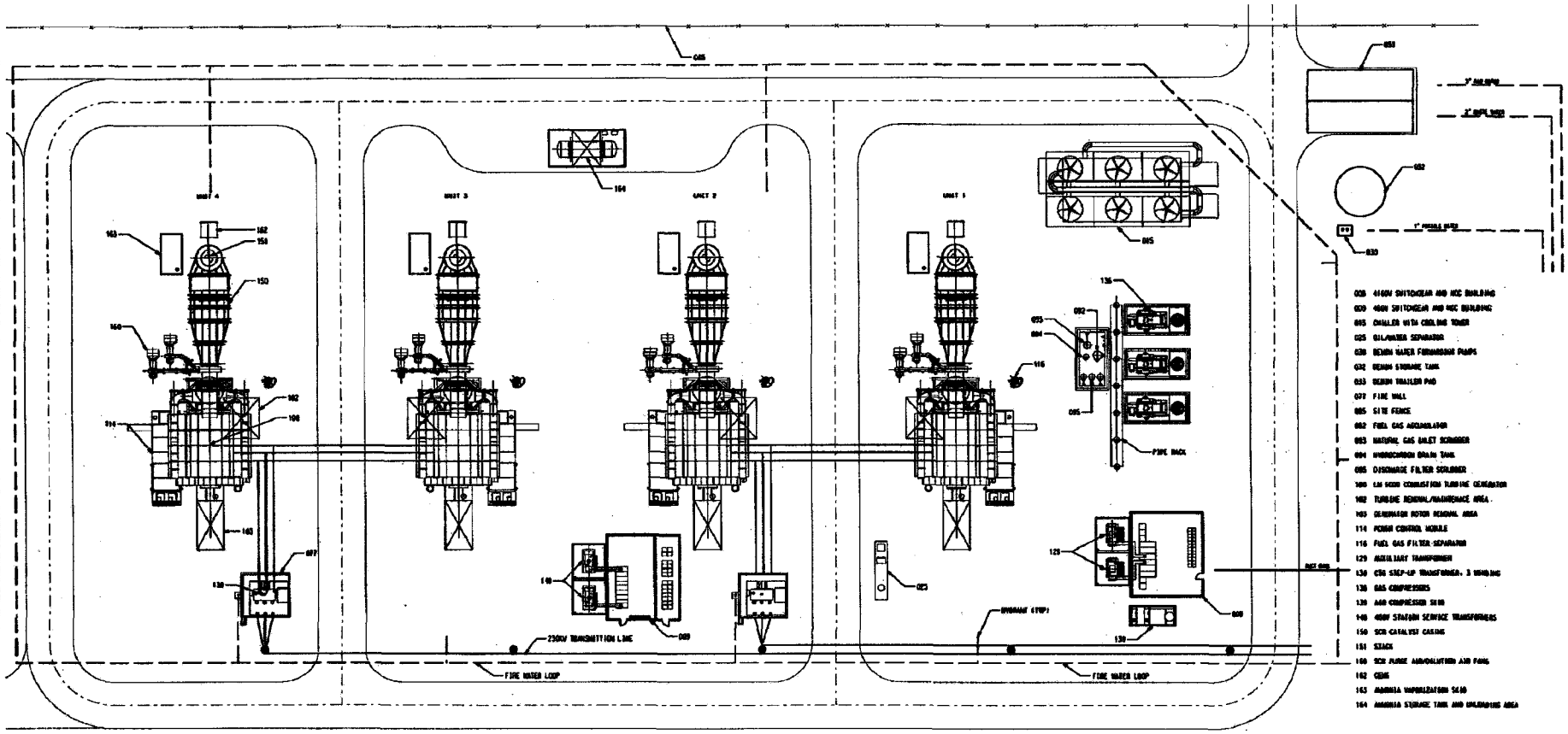

NORTHERN ARIZONA ENERGY PROJECT

Figure 3
Site Layout of Power Plant

ANALYSIS AREA: MOHAVE COUNTY, ARIZONA	
Date: 02/15/07	File: 2006-053-PP-100Drev0 For CEC 01-18-07.dwg
Drawn By: ETC	Layout: 002

Source: Bibb Engineering

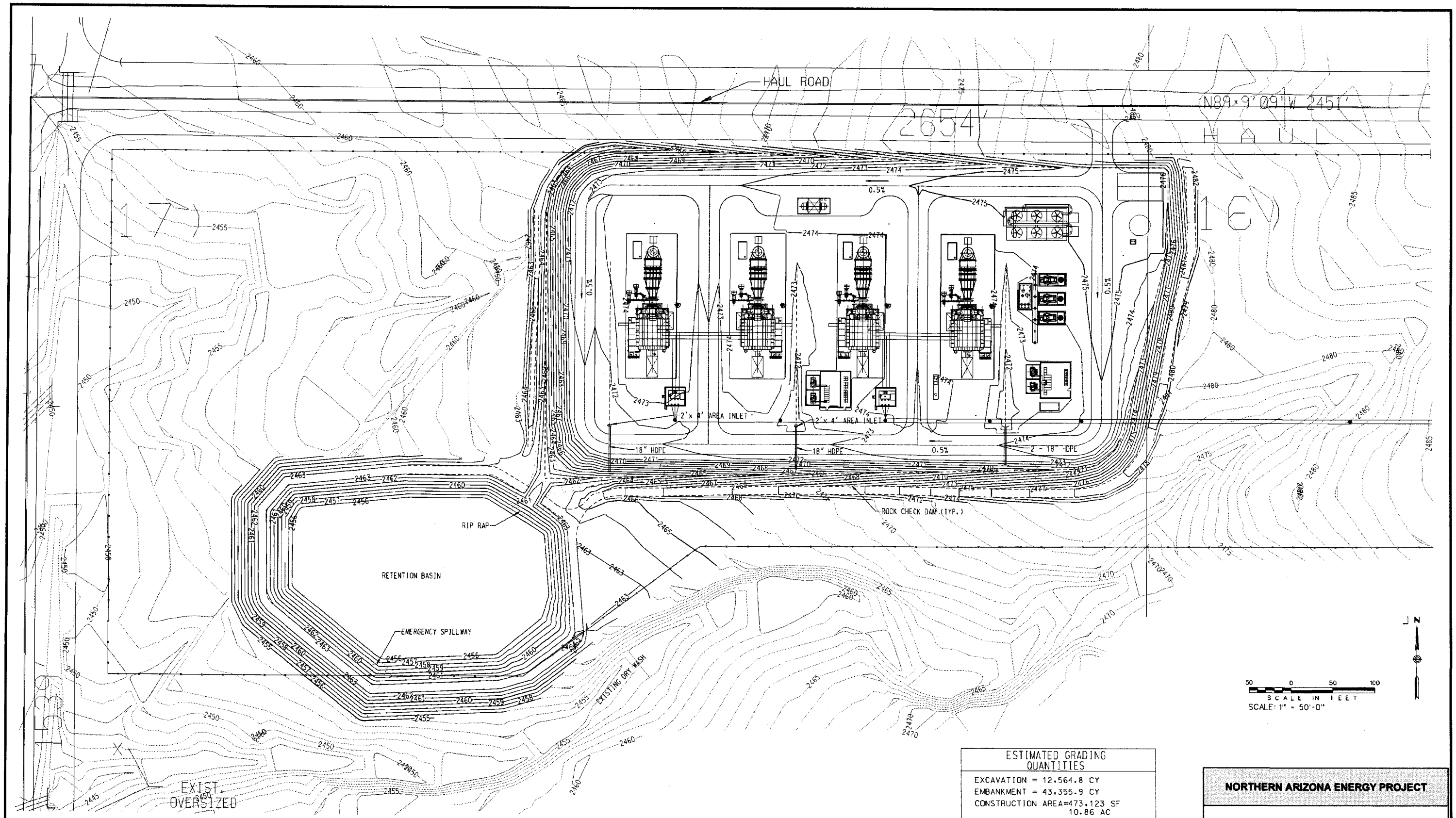

EXISTING CONTOURS BASED ON SURVEY PROVIDED BY:

MOHAVE ENGINEERING ASSOCIATES, INC.
2202 STOCKTON HILL ROAD, SUITE A
KINGMAN, AZ 86401
PHONE: 928-753-2627

ESTIMATED GRADING QUANTITIES
EXCAVATION = 12,564.8 CY
EMBANKMENT = 43,355.9 CY
CONSTRUCTION AREA=473,123 SF 10.86 AC

NOTES:
-NO ADJUSTMENT FACTORS USED FOR CUT & FILL
-VOLUMES BASED ON PROPOSED SURFACES AS SHOWN IN THIS PLAN.
-QUANTITIES BASED ON SURFACES CREATED IN GECPAK
REFERENCE: 2006053/CIV/GEOPAK/122006 PROPOSED.GSF
SITE 122006 VS. EXISTING TOPO

NORTHERN ARIZONA ENERGY PROJECT

Figure 4
Preliminary Grading Plan

ANALYSIS AREA: MOHAVE COUNTY, ARIZONA	
Date: 02/15/07	File: 2006-053-PP-100Drev0 For CEC 01-18-07.dwg
Drawn By: ETC	Layout: 003

Source: Bibb Engineering

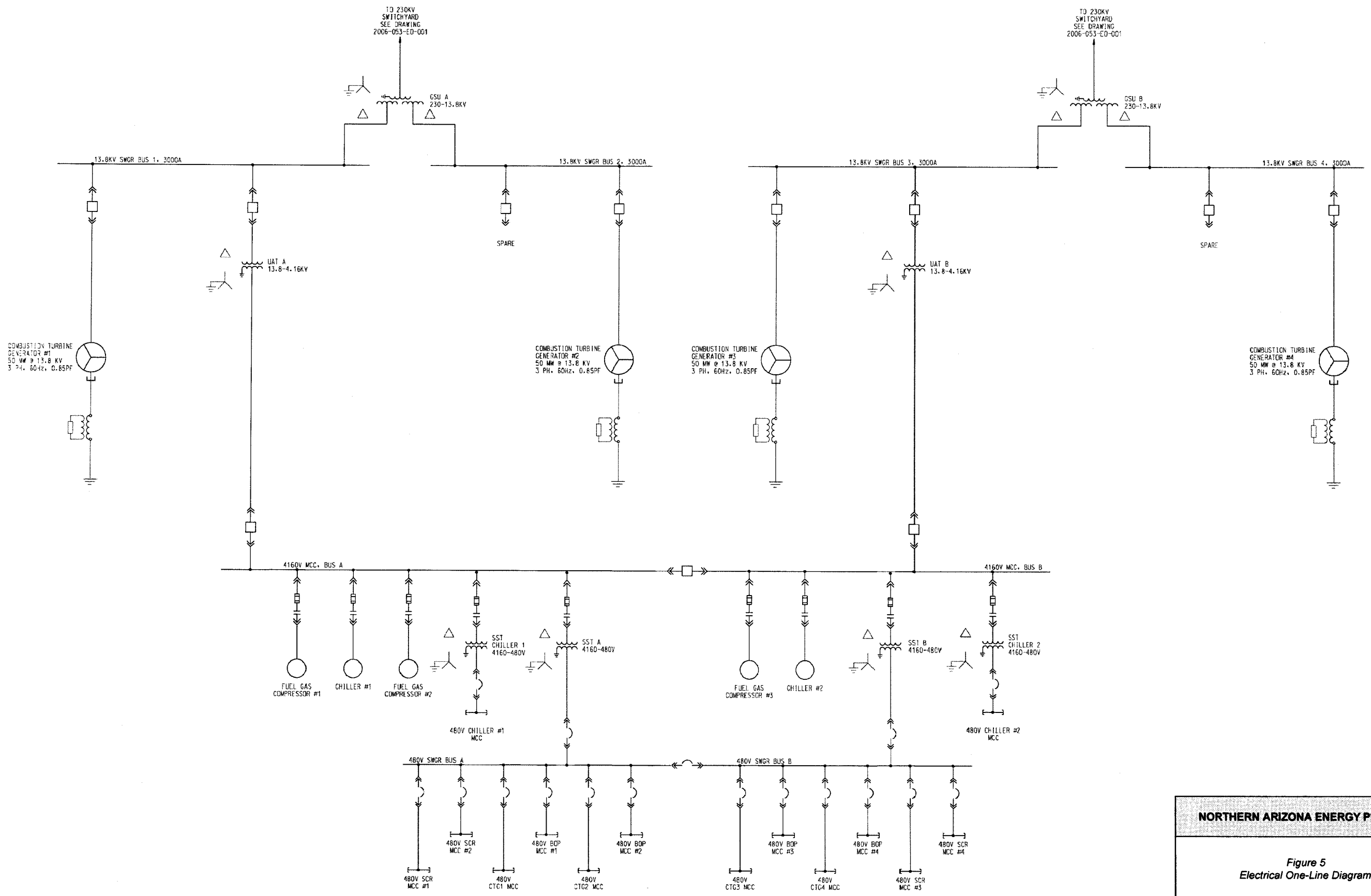

NORTHERN ARIZONA ENERGY PROJECT

Figure 5
Electrical One-Line Diagram

ANALYSIS AREA: MOHAVE COUNTY, ARIZONA	
Date: 02/15/07	File: 2006-053-PP-100Drev0 For CEC 01-18-07.dwg
Drawn By: ETC	Layout: 006

Source: Bibb Engineering

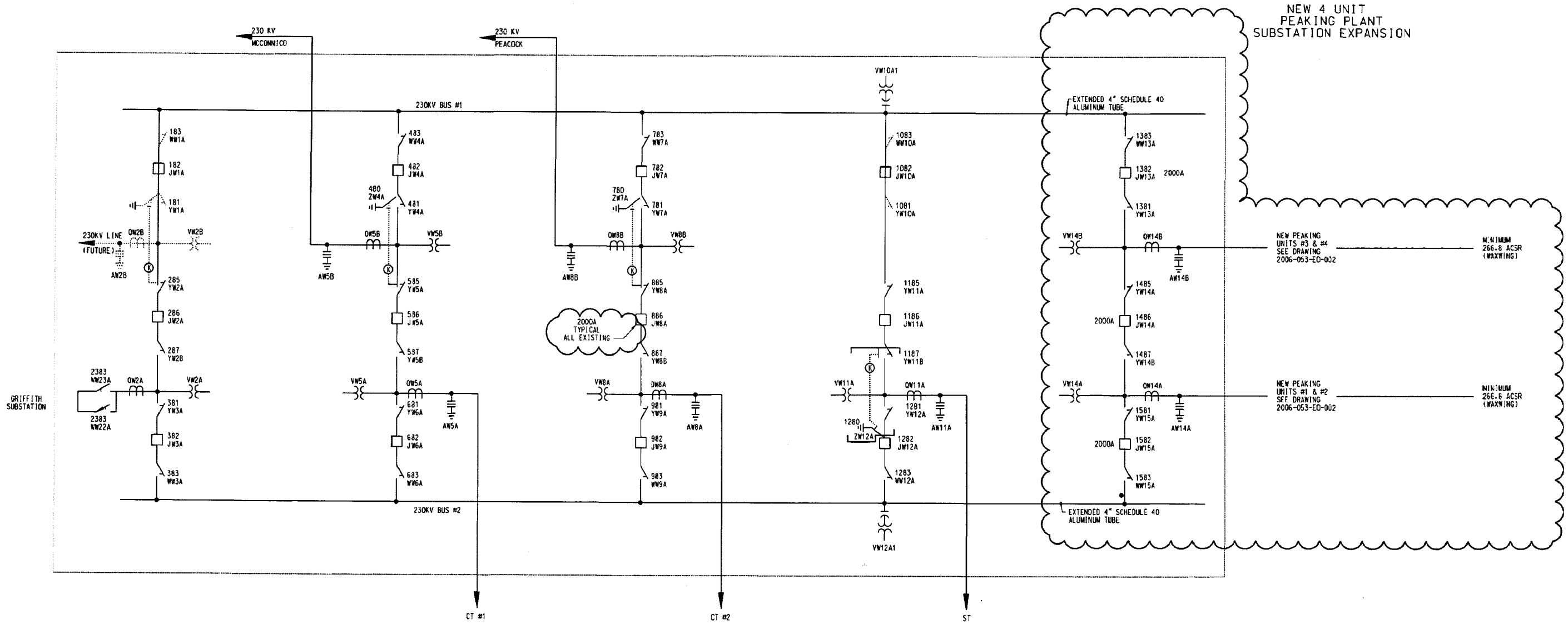

NORTHERN ARIZONA ENERGY PROJECT

Figure 6
Griffith Switchyard Interconnection
Electrical One-Line Diagram

ANALYSIS AREA: MOHAVE COUNTY, ARIZONA	
Date: 02/15/07	File: 2006-053-PP-100Drev0 For CEC 01-18-07.dwg
Drawn By: ETC	Layout: 005

Source: Bibb Engineering

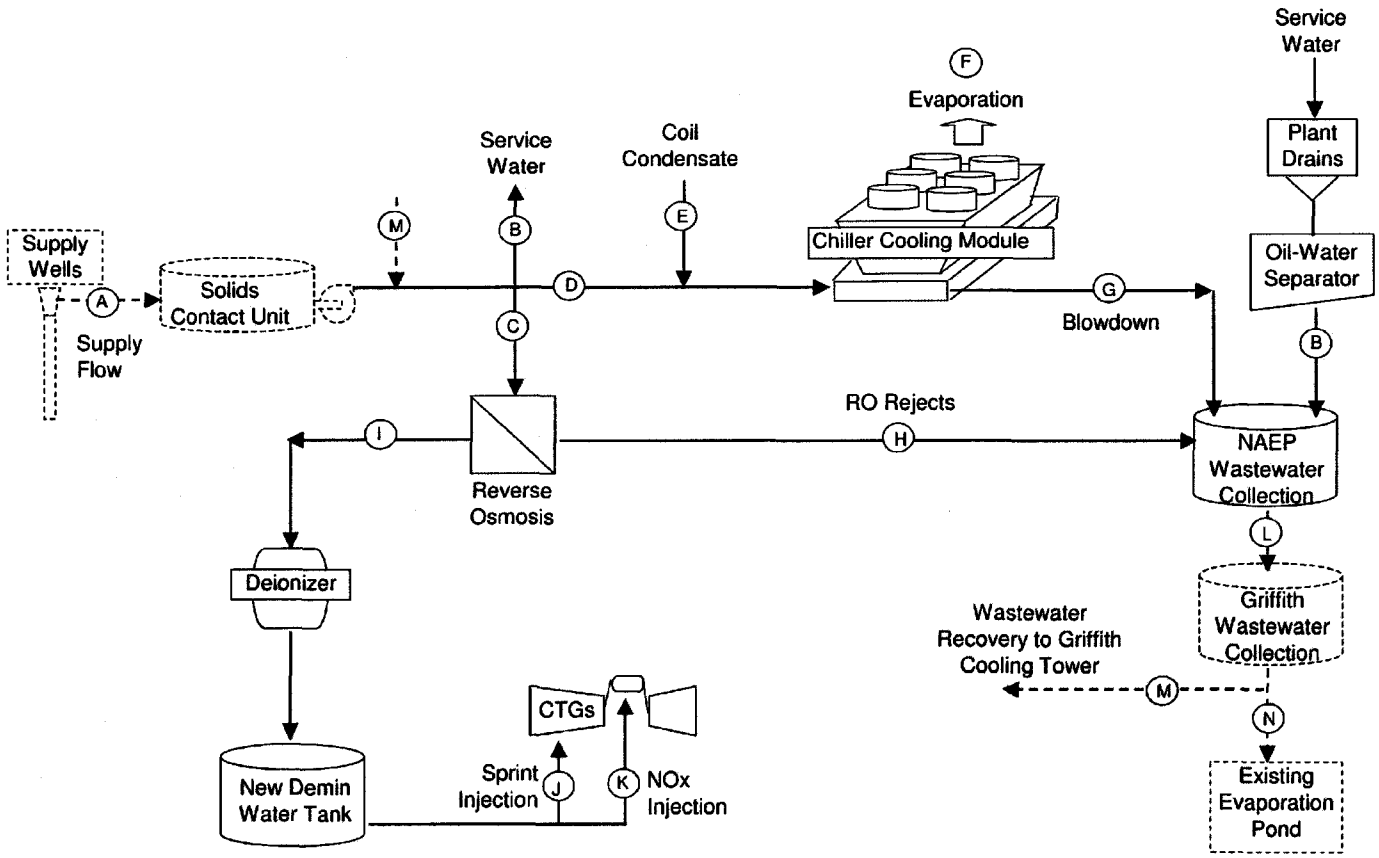

Notes:

1) Based on 4 x LM6000 PC Sprint
2) Using Griffith service water and Griffith waste water treatment
3) All Flows are displayed in GPM
4) NOx and Sprint Injection flows from GE performance estimates
5) Reverse Osmosis recovery rate 75%
6) Wastewater recovery rate 80%
7) Cooling Tower cycles of conc. 6.0

Temperatures:

Peak	113
Average Summer (Jun-Aug)	90
Average Operating (Apr-Oct)	80
Coldest Temperature:	25

Stream	Description	TEMPERATURE, F			
		113	90	80	25
A	Flow from the supply wells	380	345	290	179
B	Service water to NAEP wash-down hoses	3	3	3	3
C	Softened water to NAEP RO Trailer	271	271	271	223
D	Softened water to NAEP cooling module makeup	192	151	88	0
E	Inlet air coil condensate	25	25	25	0
F	NAEP cooling module evaporation	181	147	94	0
G	NAEP cooling module blowdown	36	29	19	0
H	NAEP RO system reject stream	68	68	68	56
I	Demineralizer trailer water flow	203	203	203	167
J	Demin water for SPRINT injection	63	63	63	0
K	Demin water for NOx injection	140	140	140	167
L	Wastewater flow to Griffith	107	100	90	59
M	Wastewater recovered by Griffith HERO™	86	80	72	47
N	Wastewater flow to evaporation pond	21	20	18	12

NORTHERN ARIZONA ENERGY PROJECT

Figure 7
Water Balance Diagram

ANALYSIS AREA: MOHAVE COUNTY, ARIZONA

Date: 02/15/07	File: 2006-053-PP-100Drev0 For CEC 01-18-07.dwg
Drawn By: ETC	Layout: 004

Source: Bibb Engineering

Northern Arizona Energy, LLC therefore affirms, upon thorough, expert scientific environmental investigation and analysis, that the Northern Arizona Energy Project and its site are environmentally compatible, and respectfully requests the Committee to issue its Certificate of Environmental Compatibility for the Project at the proposed site.

Northern Arizona Energy, LLC

By: _____
Mr. Kevin R. Johnson
Authorized Officer

ORIGINAL and __ copies of the foregoing hand delivered and filed
with the Director of Utilities, Arizona Corporation Commission,
this _____ day of _____, 2007.

EXHIBIT A LOCATION MAP AND LAND USE INFORMATION

As stated in Arizona Corporation Commission Rules of Practice and Procedure R14-3-219:

1. "Where commercially available, a topographic map, 1:250,000 scale, showing the proposed plant site and the adjacent area within 20 miles thereof.
2. Where commercially available, a topographic map, 1:62,500 scale, for each plant site, showing the area within two miles thereof. The general land use plan within this area shall be shown on the map, which shall also show the area of jurisdiction affected and any boundaries between such areas of jurisdiction. If the general land use plan is uniform throughout the area depicted, it may be described in the legend in lieu of an overlay."

Figure A-1: Proposed Plant Site, Proposed Project Features, Jurisdiction, and Land Status. Figure A-1 shows the extent of the Northern Arizona Energy Project. No transmission lines outside of the Project Property are proposed for the Project. Figure A-1 is provided in the specified scale of 1:250,500.

Figure A-2: Existing Land Use and Zoning. Figure A-2 is an aerial photo that shows the existing land use in the area and around the Project and on the current zoning designation for private lands. If no zoning is designated for a particular section, the reader can assume that the section is State or Federal land.

Figure A-3: Planned Land Use. Figure A-3 shows the planned land uses near the Project.

Figure A-2 and A-3 in this exhibit are provided in the specified scale of 1:62,500.

LAND USE

The Project will be located on an approximately 40-acre parcel of land (Project Property) located just west of Interstate 40, approximately nine (9) miles southwest of the City of Kingman, and three (3) miles north of the Griffith interchange in Mohave County, Arizona. The Project will be constructed on private lands within the County-designated Interstate 40 (I-40) Industrial Corridor just north of the existing Griffith Energy Project as shown on **Figures A-1 and A-2**. The Project Property will occupy essentially the northern-most 700 feet of the original 160 acre parcel of land owned by Griffith (Original Griffith Site) previously found to be environmentally compatible for siting an electric generating facility.

The Project will be accessed by existing roads via the Griffith interchange on I-40, which travels north-south near the Project. From the Griffith interchange, access to the Project Site will be west on Griffith Road, then approximately two (2) miles north on South Apache Road, then east on Haul Road to the Project Site entrance. Public access to the Project will be controlled through a security gate at the Project Site entrance off of Haul Road located along the north boundary of the Project Property.

Current and proposed land management plans applicable to private lands in the vicinity of the Project Property include the original Mohave County General Plan (General Plan), adopted in 1995 and amended in 2003, the 2005 Draft General Plan, the 2002 Golden Valley Area Plan, and the

Mohave County Zoning Regulations (Mohave County 1995, 2002, and 2005a and 2005b). The amended General Plan designated the I-40 Industrial Corridor; however, the Area Plan for the I-40 Industrial Corridor is not yet finalized. The Zoning Regulations establish zoning districts to implement land-use controls for development.

The Project Property is zoned for heavy industrial / manufacturing (MX). Land uses permitted within MX zoning include light and heavy industry, and commercial and industrial uses appropriate to an industrial park, such as manufacturing, and warehouses. Any uses permitted in the Commercial-Manufacturing or General Manufacturing zones are permitted uses in the MX zone without a zoning use permit. The MX zoning district corresponds to the Heavy Industrial land use designation in the adopted General Plan. This zoning designation permits the development of industrial facilities, including electric generation facilities. Existing industrial development in the vicinity of the Project Site includes the adjacent Griffith Energy Project, the Praxair industrial gases and liquids facility about two (2) miles south of the Project Site, existing transmission lines and utilities, Interstate 40 and Route 66, the mainline of the Burlington Northern & Santa Fe Railroad, and two transcontinental natural gas pipeline corridors. In addition, the Arizona State Prison in Kingman, a 1400-bed private correctional facility, is located within the I-40 Industrial Corridor.

Figure A-2 is a recent (2005) aerial photo showing the current land uses for the Project Property and surrounding lands. The current zoning designations are also shown on **Figure A-2**. The properties surrounding the I-40 Industrial Corridor are predominantly undeveloped rural lands which are privately owned and currently zoned for rural uses (primarily ranching), residential subdivisions, commercial centers, and residences and infrastructure (roads, utilities).

Other than the existing Griffith Energy Project adjacent to the south, the lands immediately adjacent to the Project Property are currently undeveloped and are primarily used for livestock grazing and some industrial uses. The nearest residence is approximately 2.5 miles northwest of the Project Property.

BLM lands in the regional area are managed for multiple uses and provide for a variety of uses including grazing and dispersed recreation such as hunting and off-road vehicle (ORV) use. These lands will not be affected by the Project. Recreation resources are discussed in the recreation section of this document.

Future and planned land uses in the vicinity of the Project have been mapped by Mohave County in the General Plan, the 2005 Draft General Plan, and the 2002 Golden Valley Area Plan (a component of the General Plan) as shown in **Figure A-3**. The planned land uses developed by Mohave County serve as a guide to land use development and to encourage land use patterns that are consistent with the goals of the General Plan, residents, and property owners. The planned land use categories in the General Plan include Rural Development Areas, Urban Development Areas, Suburban Development Areas, and Outlying Communities. Detailed land use classes within each development area are described as follows:

> Rural Development Areas - rural residential (lot sizes 5 acres or larger), rural industrial, public parks, public lands, non-residential uses such as neighborhood commercial, commercial recreation, light industrial, heavy industrial and airport industrial.

Suburban Development Areas - suburban estates and suburban residential (lot sizes between 1 and 5 acres), public facilities, public parks, and public lands.

Urban Development Areas - low, medium and high density residential, neighborhood commercial, general commercial, commercial recreation, light industrial, and heavy industrial.

Outlying Communities –development within designated communities in the unincorporated portions of the county may be rural, suburban, or urban.

Based on the General Plan, the planned land use for the Project Property is heavy industrial use within the boundaries of the I-40 Industrial Corridor as shown on **Figure A-3**. The planned land uses within the I-40 Industrial Corridor also include light industry, manufacturing, and commercial. The I-40 Industrial Corridor between Kingman and Lake Havasu offers large industrial tracts to accommodate warehouse-distribution and manufacturing firms that require direct highway access, and/or rail access and/or natural gas. Major planned developments within the I-40 Industrial Corridor include a Wal-Mart 880,000-square-foot distribution center and a Nutribiotechnologies, Inc. facility.

The planned land uses for the lands surrounding the I-40 Industrial Corridor include Rural Development, Suburban Development, and Urban Development Areas as shown on **Figure A-3**. One Urban Development Area designated as General Commercial is located southwest of the City of Kingman along Interstate 40, and a Suburban Development Area is designated between the General Commercial Area and the I-40 Industrial Corridor.

Several areas in the region of the Project Property have been platted for subdivision, including Sacramento Rancheros, Golden Valley South, and Sacramento City. The section of land adjoining the western boundary of the Project Property is subdivided and zoned for the Sacramento Rancheros residential subdivision, but is currently undeveloped. Golden Valley South is a proposed residential development located between Shinarump Road (County Highway 223) on the north and Aquarius Drive on the south, Yuma Road on the east, and Tombstone Trail on the west. The proposed Golden Valley South Area Plan (Rhodes 2005) was prepared as an extension of the previously adopted Golden Valley Area Plan for land development south of Shinarump Road. Sacramento City is the platted section located approximately two miles northwest of the Project Property. There are currently no housing developments on the platted subdivisions in the vicinity of the Project Property as shown on **Figure A-2**.

There are no identified plans for development of recreational facilities in the immediate vicinity of the Project.

Potential Effects

The Project Site will be located on eight (8) acres of the 40 acre Project Property of privately owned land that is an undeveloped portion of the Original Griffith Property (formerly approved for power generation). This Project Property is located within the I-40 Industrial Corridor.

The planned land uses for the lands surrounding the I-40 Industrial Corridor include Rural Development, Suburban Development, and Urban Development Areas as shown on **Figure A-3**. Several areas near the Project Property have been platted for subdivision; however, there are currently no housing developments in the vicinity of the Project Property as shown on **Figure A-2**.

The nearest residence is approximately 2.5 miles northwest of the Project Property. Therefore the Project will not be expected to impact residential areas.

The Project will be in conformance with the Mohave County Zoning Regulations and planned land uses in the vicinity of the Project Property. No local land use permits, such as conditional use or special use permits, will be required by Mohave County, given the MX zoning of the Project Property. Industrial land uses within the I-40 Industrial Corridor will be compatible with Mohave County's previously planned land uses for development as outlined in the amended General Plan. The Project Property is located in the vicinity of existing industrial development, including the existing Griffith Energy Project, a Praxair facility that manufactures specialty gases, and proposed facilities including a Wal-Mart distribution center and a Nutribiotechnologies, Inc. facility.

Within the MX zoning district, facilities between ¼ mile and one mile of any federal highway have a height limit of 150 feet. The Project Property is located within one mile of I-40. The maximum height for any Project component will be the exhaust stacks at85 feet. Therefore, the Project will comply with the industrial performance standards for the MX zone.

The Project will develop approximately eight (8) acres of undeveloped land within the I-40 Industrial Corridor for the life of the Project. The Project will not have any appreciable long-term adverse impacts on the surrounding land uses because of the localized nature of disturbance and because no existing residences or other sensitive land uses were identified in the immediate vicinity. The Project will be fully compatible with the County's Zoning Regulations and planned land uses for the I-40 Industrial Corridor and will comply with the industrial performance standards for the MX zone. Because the Project will be compatible with the current Zoning Regulations and the General Plan's planned land uses for the Project Property, no long-term impacts to planned land uses from the construction and operation of the Project are expected.

Legend

- BLM Wilderness Area
- Municipal Area

Land Owner

- BLM
- Lake Mead N.R.A
- Parks & Recreation
- Private
- State Trust
- Havasu N.W.R.

N W E S

5 2.5 0 5

Miles

Sources: Williams, Prescott, Kingman, & Needles 1:250,000 USGS Quadrangles

NORTHERN ARIZONA ENERGY PROJECT

Figure A-1
Project Site, Jurisdiction, and Land Status

ANALYSIS AREA: MOHAVE COUNTY, ARIZONA	
Date: 01/19/2007	File: 2516/Regional .MXD
Created By: JG	Layout: Regional PDF

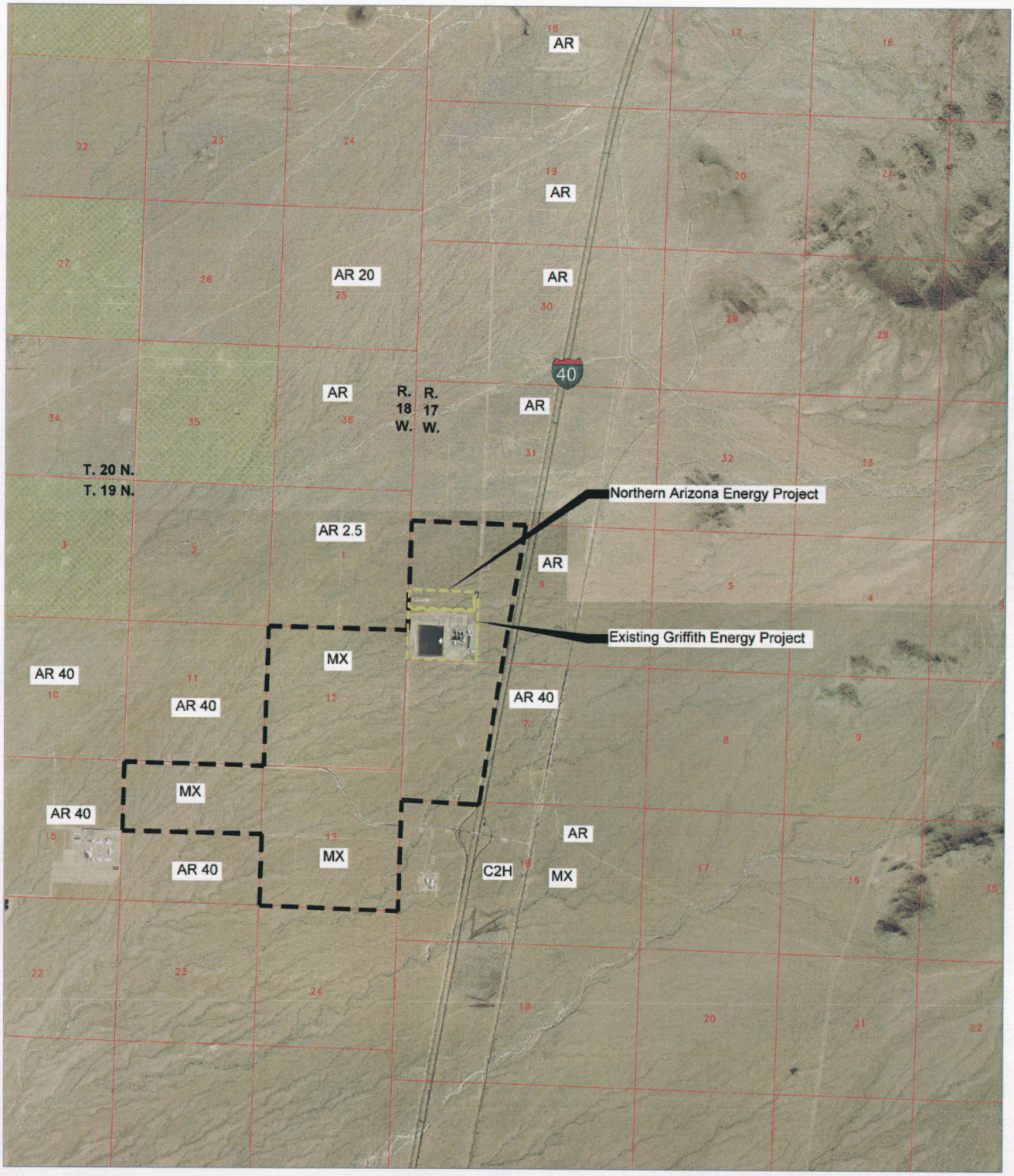

Legend

- Transitional Area
- Shrub and Brush Rangeland
- I-40 Industrial Corridor Boundary

Zoning Districts

- AR Agricultural Residential
- MX Heavy Manufacturing
- C2H Highway Commercial

Source: Griffith CEC

N W E S

0 1 2 Miles

NORTHERN ARIZONA ENERGY PROJECT

Figure A-2
Existing Land Use and Zoning

ANALYSIS AREA: MOHAVE COUNTY, ARIZONA	
Date: 02/15/07	File: Figure A-2.dwg
Drawn By: ETC	Layout: 001

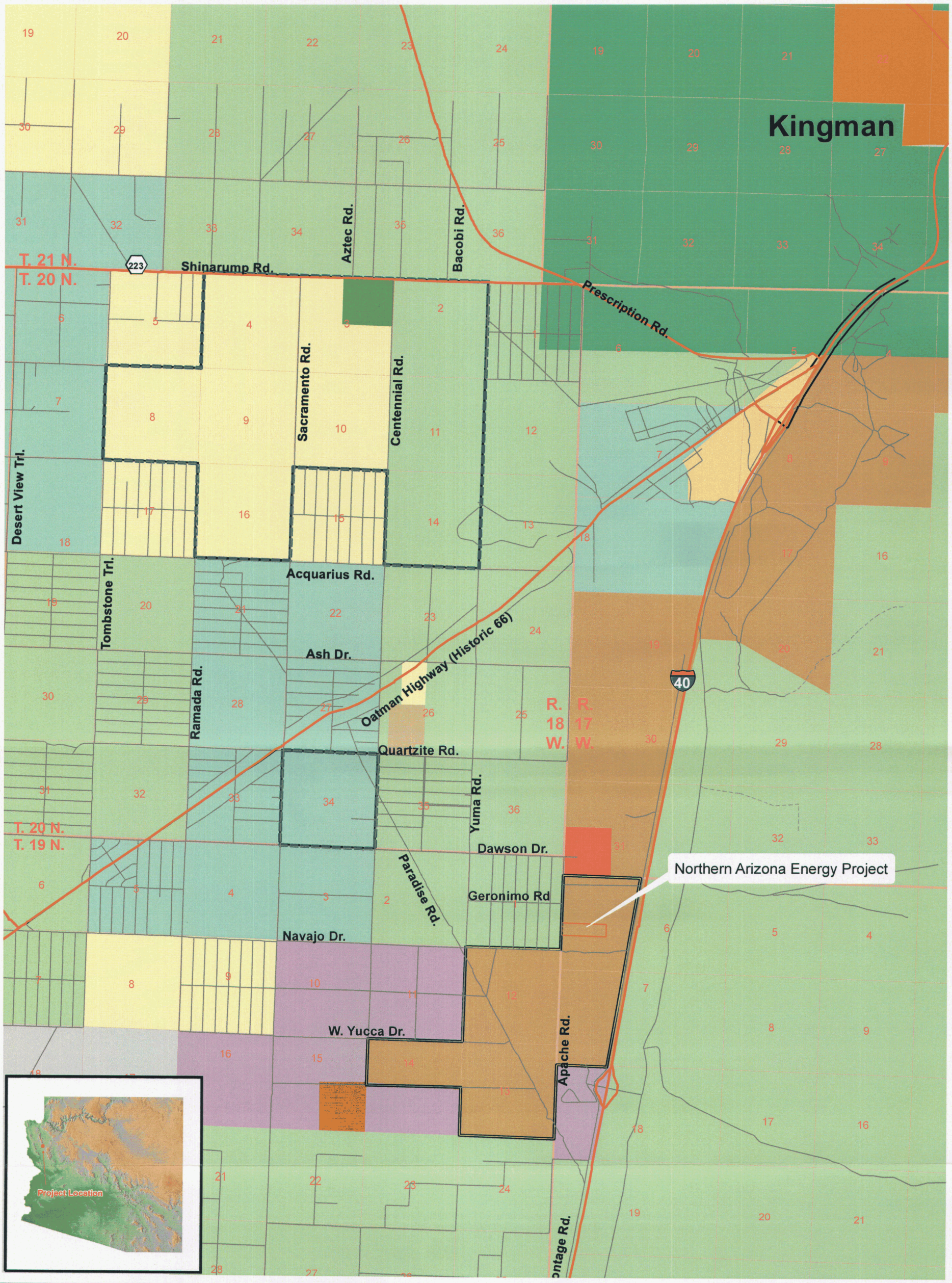

Legend

- Interstate/Highway
- Major Arterial
- Primitive Road
- Street
- Trail / Alley
- Northern Arizona Energy Property Boundary
- I 40 Industrial Corridor Boundary
- Golden Valley Holdings

LandUse

- Corbat Foothills Recreation Area
- General Commercial
- Griffith
- Heavy Industrial
- High Density Residential
- Kingman Municipal
- Light Industrial
- Low Density Residential
- Medium Density Residential
- Prison
- Public Facilities
- Rural Development Area
- Suburban Development Area
- Urban Development Area

N W E S

1 0.5 0 1

Miles

Transverse Mercator Projection
1983 North American Datum
Zone 12
Meters

NORTHERN ARIZONA ENERGY PROJECT

Figure A-3
Planned Land Use

ANALYSIS AREA: MOHAVE COUNTY, ARIZONA	
Date: 02/15/2007	File: 2516/LU.MXD
Created By: JG	Layout: LU. PDF

EXHIBIT B ENVIRONMENTAL REPORTS

As stated in Arizona Corporation Commission Rules of Practice and Procedure R14-3-219:

"Attach any environmental studies which applicant has made or obtained in connection with the proposed site(s) or route(s). If an environmental report has been prepared for any federal agency or if a federal agency has prepared an environmental statement pursuant to Section 102 of the National Environmental Policy Act, a copy shall be included as part of this exhibit."

An Environmental Assessment (EA) is being prepared by the Applicant to evaluate the proposed interconnection of the Northern Arizona Energy Project to the Western transmission system. When completed, both the Draft and Final EA will be furnished as a supplement to this Application (under separate cover) when available.

In addition to the EA, the Applicant has applied or is preparing applications for other permits needed for the Project. These permits are listed in **Table B-1**.

One of the required permits is the air quality permit from the Arizona Department of Environmental Quality (ADEQ). As part of that process, an initial Air Quality Impact Analysis report was prepared by Sierra Research in 2007 to address potential impacts of the Project. A copy of the report is included as **Exhibit B-1**.

A cultural resources survey for the Original Griffith Site was conducted by Greystone in 1998 to meet or exceed the standards of the Arizona State Museum for cultural resource inventories. The survey contributed to Section 106 consultation by Western during preparation of the Griffith EIS. The Griffith area of disturbance is in the W½SW¼ of Section 6. In addition, reconnaissance was completed on the entire 160 acre Original Griffith Site. The Northern Arizona Energy Project will occupy the northern most 700 feet of the Original Griffith Site previously surveyed for cultural resources.

The results of other site surveys and environmental studies are discussed in subsequent sections of this application. **Exhibit A** describes land use; **Exhibit C** addresses whether there are sensitive biological resources in the Project area; **Exhibit D** discusses other biological resources in the area; **Exhibit E** summarizes the results of the cultural resources survey and discusses the potential effects on the area's scenic quality; **Exhibit I** discusses the noise impacts that are expected.

Table B-1 Northern Arizona Energy Project Environmental Regulatory Requirements

Authorizing Agency	Law or Regulation	Type of Permit/ Approval/Action/Constraint	Purpose of Permit/Regulated Project Component
Arizona Corporation Commission	— Arizona Revised Statutes	— Certificate of Environmental Compatibility	Siting of power plant.
Arizona Department of Environmental Quality	— Federal Clean Air Act — Arizona Department of Environmental Quality Regulations	— Air Quality Permit	Emissions of regulated pollutants from plant.
		— Fugitive Dust Permit	Construction dust control.
	— Arizona Ambient Air Quality Guidelines	— Toxic Air Pollutants Standards	Emissions of toxic air contaminants.
	— Clean Water Act	— Stormwater Discharge Permit	Separate permits for construction and operation at plant site.
		— Spill Prevention Control and Countermeasure Plan	Separate plans for construction and operation.
	— SARA Title III	— Community Right-to-Know Reporting	Chemical storage and use during operations.
	— Resource Conservation and Recovery Act (RCRA)	— Hazardous Waste and Hazardous Materials Storage and Handling Permits	Chemical storage and use during operations.
	— National Environmental Policy Act of 1969 (NEPA)	— Record of Decision (Western)	Western for transmission line interconnection.
Western Area Power Administration	— National Historic Preservation Act (NHPA) of 1966 as amended	— Cultural Resources Data Recovery Plan — Native American Consultations	Required by NEPA, included in EA.
	— Archaeologic Resources Protection Act (ARPA) of 1979	— Cultural Resources Mitigation Native American Consultations	Required by NEPA, included in EA.
	— Native American Graves Protection and Repatriation Act	— Protection of remains and Funerary objects — Native American Consultations	Required by NEPA, included in EA.
	— Executive Order 11988	— Floodplain management	Required by NEPA, included in EA.
	— Executive Order 11990	— Protection of Wetlands	Required by NEPA, included in EA.
	— Executive Order 12898	— Environmental Justice in Minority Populations and Lower Income Populations	Required by NEPA, included in EA.
	— Executive Order 13007	— Protection of Indian Sacred Sites and their Religious Practices	Required by NEPA, included in EA.

Table B-1 Northern Arizona Energy Project Environmental Regulatory Requirements			
Authorizing Agency	**Law or Regulation**	**Type of Permit/ Approval/Action/Constraint**	**Purpose of Permit/Regulated Project Component**
	— Endangered Species Act	— Biological Assessment and Consultation with USFWS	Required by NEPA, included in EA.
	— Migratory Bird Treaty Act of 1918	— Protection of Migratory Birds	Required by NEPA, included in EA.
	— Clean Water Act	— Section 404 Permit	Nationwide authorization for pipelines and transmission line interconnections.
U.S. Army Corps of Engineers	— Endangered Species Act	— Section 7 Consultation, if necessary (Biological Opinion)	Required by NEPA.
U.S. Fish & Wildlife Service	— Clean Air Act	— Air Quality Permits to Construct and Operate (PSD/Title V)	Review of air permit
U.S. Environmental Protection Agency	— Arizona Revised Statutes	— Certificate of Environmental Compatibility	Siting of power plant.
Arizona Game and Fish Department	— National Historic Preservation Act	— Cultural Resources Consultation with Western and COE	Commentor on EA, approves cultural resource plans and mitigation, if needed.
Arizona State Historic Preservation Office	— Native Plant Law	— Salvage or Removal Permit	Notice of clearing on private lands.
Arizona Department of Agriculture	— County Ordinances	— Specific Use Permit — Septic/Sewage Package Permit — Building Permit — Excavation Permit (pipeline) — Grading Permit	Approvals for power plant and infrastructure.

EXHIBIT B-1 AIR QUALITY IMPACT ANALYSIS

Air Quality

The Project will be located in Mohave County. The Project Property is bounded on the south by Griffith; the western boundary is Apache Road; the northern boundary is Haul Road; and eastern boundary borders open land.

According to data from the Western Regional Climate Center (2007), the climate in the Project vicinity is moderate all year long with mild winter temperatures and cooler summers than other parts of the state. Summer temperatures may go as high as 110 degrees. In the winter, the lows may go down to the low 20's only periodically. The average daily temperature during winter (December thru February) is 46-53°F. The average annual low temperature is 54°F, while the average annual high temperature is 81°F. The average annual precipitation is 7.56 inches per year.

Existing Air Quality

The Clean Air Act (CAA) of 1970, 42 USC 7401 et seq., as amended in 1977 and 1990, and Title 40 of the Code of Federal Regulations (CFR) Parts 50-99 are the basic federal statutes and regulations governing air pollution in the United States. The CAA designates six criteria pollutants for which seven national ambient air quality standards (NAAQS) have been promulgated to protect human health and welfare. The criteria pollutants are:

- Sulfur oxides, measured as sulfur dioxide (SO2);
- Particulate matter with an aerodynamic diameter less than or equal to a nominal 10 micrometers (PM10);
- Particulate matter with an aerodynamic diameter less than or equal to a nominal 2.5 micrometers (PM2.5);
- Carbon monoxide (CO);
- Ozone (O3);
- Nitrogen dioxide (NO2); and
- Lead (Pb).

The NAAQS are codified in 40 CFR Part 50 and are summarized in **Table B-1**. The Arizona ambient air quality standards for criteria pollutants are the same as the federal standards.

Based on the NAAQS for each criteria pollutant, the U.S. Environmental Protection Agency (EPA) classifies airsheds throughout country as attainment areas and nonattainment areas. Attainment areas are airsheds that comply with NAAQS, while nonattainment areas are those that do not. A given area can be classified as both attainment and nonattainment since the NAAQS are pollutant specific. Mohave County is currently classified as an attainment area for all criteria pollutants.

TABLE B1-1 National Ambient Air Quality Standards For the Northern Arizona Energy Project			
Pollutant	**Averaging Time**	**Primary Standard µg/m**	**Secondary Standard µg/m^3**
SO_2	Annual[1]	80 (0.030 ppm)	-
	24-Hour[2]	365 (0.14 ppm)	-
	3-Hour[2]	-	1,300 (0.5 ppm)
PM_{10}	Annual[1]		
	24-Hour[2]	150	150
$PM_{2.5}$	Annual[1]	15	15
	24-Hour[2]	35	35
CO	8-Hour	10,000 (9 ppm)	-
	1-Hour[2]	40,000 (35 ppm)	-
Ozone	8- Hour[3]	157 (0.08 ppm)	157 (0.08 ppm)
NO_2	Annual[1]	100 (0.05 ppm)	100 (0.05 ppm)
Lead	Quarter[1]	1.5	-

Key:
µg/m = micrograms per cubic meter
ppm = parts per million
1. Arithmetic mean.
2. Block average.
3. Rolling average.

Arizona Department of Health Services established the Arizona Ambient Air Quality Guideline (AAAQG) values for various toxic air pollutants (TAPs) in 1992. New projects are required to compare modeled emission rates of potential TAPs to demonstrate compliance with the AAAQG values. **Table B-2** lists the potential project TAPs and their respective AAAQG screening values.

TABLE B1-2 Arizona Ambient Air Quality Guideline Screening Values For the Northern Arizona Energy Project			
Pollutant	**1-Hour µg/m**	**24-Hour µg/m**	**Annual µg/m**
Acetaldehyde	2300	1400	0.5
Ammonia	-	140	-
Benzene	630	51	0.14
Ethylbenzene	4500	3500	-
Formaldehyde	20	12	0.08
Hexane	5300	1400	-
Toluene	4700	3000	-
Xylene	5500	3500	-

Key:
µg/m = micrograms per cubic meter

Air Quality Impacts

The regional air quality will not be adversely impacted by the construction or operation of this Project. An air quality permit application will be filed with the Arizona Department of Environmental Quality (ADEQ) in February 2007.

Construction Air Pollutant Emissions

At the Project Site and along service corridors within the Project area, air pollutant emissions that result from the operation of vehicles and generation of fugitive dust during construction activities are expected to be minor and temporary. Vehicular and crankcase emissions from gasoline and diesel engines will comply with applicable EPA mobile source emission regulations (40 CFR Part 85) by using equipment manufactured to meet these specifications. During construction, fugitive dust may be produced at the Project Site and Temporary Construction Area. Dust suppression activities, such as watering, will be used as necessary to minimize these potential impacts.

Air Pollutant Emissions from Operations

The Project includes the following sources of air pollutants:

- Four General Electric (GE) LM6000 PC SPRINT NxGen combustion turbine generators (CTGs); and
- One six-cell, 7,600 gallon per minute (gpm) chiller.

Anticipated emissions levels for the aforementioned equipment are shown in **Table B-3**. The emissions data are based on manufacturer-supplied emission factors and are supplemented, where necessary, with EPA default emission factors obtained from AP-42 (EPA 2001). Emissions from the CTGs will be controlled through the use of an SCR system and an oxidation catalyst. **Figure 3, Site Layout of Power Plant of the Application** shows the positioning of above mentioned equipment on the Project Site.

Air Quality Permitting Requirements

ADEQ is the lead air permitting authority for the Project. ADEQ's air quality regulations are codified in Title 18 of the Arizona Administrative Code (AAC) Chapter 2. They incorporate the federal program requirements listed in 40 CFR Parts 50-99 and establish permit review procedures for all facilities that can emit pollutants to the ambient air. Any new facility or modification to an existing facility is required to obtain an air quality permit prior to initiating construction. Facilities can trigger additional review by EPA if emissions exceed the major source thresholds listed in 40 CFR §52.21(b)(1)(i). While the Project will not exceed any federal significance thresholds; ADEQ has deemed that from a regulatory process perspective, the Project qualifies as a minor modification to an existing major stationary source; however, ADEQ has agreed to issue a separate permit for the Project. EPA will be reviewing the permit application and ADEQ's proposed permit to ensure all federal program requirements are met.

The remainder of this section details various applicable permitting requirements, which the Applicant is addressing in its permit application.

The pre-construction review process for new or modified major sources located in attainment areas is called New Source Review (NSR), which may include a Prevention of Significant Deterioration (PSD) review. This process is intended to keep new air emission sources from causing existing air quality to deteriorate beyond acceptable levels. ADEQ has codified the NSR program and federal PSD requirements in 18 AAC §R18-2-401, et seq. Since the Project emissions will not exceed the significance thresholds for major modification (18 AAC §R18-2-101.106), no additional PSD analysis will be required.

ADEQ has determined that while the Project is a minor source, for evaluation of significance, the emissions generated by Griffith need to be included in determining significance. Griffith is a Class I PSD facility. Therefore the Project will also be classified as a Class I facility.

Other Applicable Requirements

40 CFR Part 60 establishes new source performance standards (NSPS) for specific emission sources. ADEQ incorporates these emission standards by reference in 18 AAC §R18-2-901, et seq. 40 CFR Part 60 Subpart KKKK: Standards of Performance for Stationary Combustion Turbines. Subpart Db lists affected emission sources as stationary combustion turbines with a heat input at peak load equal to or great than 10 MMBTU/hr. Each CTG has a heat input greater than 10 MMBTU/hr, therefore this regulation is applicable.

40 CFR Parts 61 and 63, as incorporated by reference in 18 AAC §R18-2-1101, et seq., are the Federal emission standards that have been developed to address certain individual hazardous air pollutants (HAPs) and HAP emissions from a variety of source categories. The individual HAP rules are found in 40 CFR Part 61 and are typically referred to as the national emission standards for hazardous air pollutants (NESHAPs). The Project will not emit any of the individual HAPs included in the NESHAPs rules.

The source category rules, commonly referred to as the maximum achievable control technology (MACT) standards (40 CFR Part 63), apply to facilities that are classified as major sources of HAPs, and operate affected equipment as listed in each standard. A facility is a major source of HAPs if it emits any individual HAP in excess of 10 tpy or a combination of HAPs in excess of 25 tpy. Because the Project will not be a major source of HAPs, the MACT provisions do not apply.

TABLE B1-3 Air Emission Estimates for the Northern Arizona Energy Project Mohave County, Arizona

	NO_X		CO		SO_X[3]		$PM_{10}/PM_{2.5}$		VOC[4]		HAPs[5]	
Source	**Lbs/hr**	**tons/yr**	**lbs/hr**	**tons/yr**	**lbs/hr**	**tons/yr**	**Lbs/hr**	**tons/yr**	**lbs/hr**	**tons/yr**	**lbs/hr**	**tons/yr**
Existing Equipment/Activities[1]	0	0	0	0	0	0	0	0	0	0	0	0
New Equipment –CTG's[2,3]	31.60	39.71	23.09	35.90	24.56	32.30	10.80	14.31	11.02	15.54	0.77	4.10
New Equipment – Chiller							0.16	0.68				
Project Annual Emissions [3]		39.71		35.90		32.30		14.99		15.54		4.10
PSD Significance Thresholds		40.00		100.00		40.00		15.00		40.00		NA[6]
Title V Threshold		100.00		100.00		100.00		100.00		100.00		10/25

Notes:

1. No existing equipment, new facility. Emissions from the adjacent Class I Griffith Energy Project are included in the determination of significance, therefore, significance levels based on PSD/major modification thresholds versus new source.
2. Total emissions are based on four (4) GE LM6000 combustion gas turbines operating a combined ~10,500 hours per year.
3. SOx emissions are based on the presence of sulfur in the fuel. A nominal amount of sulfur (5 grains per 100 scf) was assumed to be present.
4. VOC = Volatile Organic Compounds
5. HAP = Hazardous Air Pollutants
6. NA - Not Applicable

EXHIBIT C AREAS OF BIOLOGICAL WEALTH

As stated in Arizona Corporation Commission Rules of Practice and Procedure R14-3-219:

"Describe any areas in the vicinity of the proposed site or route which are unique because of biological wealth or because they are habitats for rare and endangered species. Describe the biological wealth or species involved and state effects, if any, the proposed facilities will have thereon."

BIOLOGICAL WEALTH

Threatened, Endangered and Sensitive Plant Species

A number of special status plant species are found in Mohave County. These species include those designated as threatened, endangered, candidates for listing or sensitive by Federal agencies, as well as those of concern to the State of Arizona. **Table C-1** contains information regarding the special status species that have potential habitat in Mohave County. A few species are known to occur in locales near the Project Site. These include white-margined penstemon (Penstemon albomarginatus), three hearts (Tricardia watsonii), and crownless (or Utah) milkweed vine (Cynanchum utahense). Others could possibly occur due to the presence of potential habitat in the vicinity of the Project. The only known population of white-margined penstemon in Arizona is located at Dutch Flat, approximately 15 miles southeast of the Project. This penstemon, a perennial found on sandy washes and alluvial terraces in deep sandy soils, grows in association with creosotebush and cheesebrush (Rutman 1992).

Table C-1 Special Status Plant Species Found in the Project Vicinity

Agency	Designation	Scientific name	Common name	Potential habitat in Project Area
U.S. Fish and Wildlife Service (USFWS)	endangered	*Purshia subintegra*	Arizona cliffrose	none
USFWS	threatened	*Pediocactus sileri*	Siler pincushion cactus	none
USFWS	threatened	*Cycladenia humilis ssp. jonesii*	Jones' cycladenia	none
BLM	sensitive	*Penstemon albomarginatus*	white-margined beardtongue	moderate to high
BLM	sensitive	*Astragalus newberryi* var. *aquarii*	Aquarius (Newberry's) milkvetch	moderate to high
BLM	sensitive	*Purshia glandulosa*	Antelopebush	none
BLM	sensitive	*Cordylanthus nevinii*	Nevin's birdsbeak	moderate to high
BLM	sensitive	*Petalonyx nitidus*	Mohave sandpaper bush	none
BLM	sensitive	*Tetradymia argyraea*	Striped Horsebrush	none
BLM	sensitive	*Fremontodendron californicum*	California flannelbush	moderate to high
BLM	sensitive	*Pediocactus peeblesianus* ssp. *fickeiseniae*	Fickeisen pincushion cactus	none
BLM	sensitive	*Penstemon bicolor* ssp. *roseus*	two-color beard-tongue	moderate to high

Table C-1 Special Status Plant Species Found in the Project Vicinity				
Agency	**Designation**	**Scientific name**	**Common name**	**Potential habitat in Project Area**
BLM	sensitive	*Cynanchum utahense*	crownless (or Utah) milkweed vine	moderate to high
BLM	sensitive	*Tricardia watsonii*	Three hearts	moderate to high
BLM	sensitive	*Phacelia parishii*	Parish phacelia	moderate to high
BLM	sensitive	*Astragalus holmgreniorum*	Paradox milkvetch	none
BLM	sensitive	*Senna armata*	shrubby senna	moderate to high
State of Arizona	salvage restricted	*Mammillaria viridiflora*	varied fishhook cactus	none

Source: Arizona office of the BLM 1998

Threatened, Endangered or Sensitive Wildlife Species

The United States Fish and Wildlife Service (USFWS), the Bureau of Land Management (BLM), and the Arizona Game and Fish Department (AGFD) have identified the threatened, endangered and sensitive wildlife species as occurring or potentially occurring within Mohave County. **Table C-2** contains information regarding the special status wildlife species which could have potential habitat in the proposed Project area. The Federal list includes thirteen threatened and endangered wildlife species: Mojave Desert tortoise (*Gopherus agassizii*), Hualapai Mexican vole (*Microtus mexicanus hualpaiensis*), bonytail chub (*Gila elegans*), humpback chub (*Gila cypha*), razorback sucker (*Xyrauchen texanus*), Virgin River chub (*Gila seminuda*), woundfin (*Plagopterus argentissimus*), American peregrine falcon (*Falco peregrinus anatum*), bald eagle (*Haliaeetus leucocephalus*), California condor (*Gymnops californianus*), Mexican spotted owl (*Strix occidentalis lucida*), southwestern willow flycatcher (*Empidonax traillii extimus*) and the Yuma clapper rail (*Rallus longirostris yumanensis*) (Fowler-Propst, 1998). The BLM has identified five species of special concern: the rosy boa (*Lichanura trivirgata gracia*), mountain plover (*Charadrius montanus*), northern goshawk (*Accipiter gentilis*), the Hualapai Pocket Gopher (*Thomomys umbrinus)* and the Gila monster (*Heloderma suspectum cinctum*). Additionally the AGFD has identified the Sonoran Desert tortoise (*Gopherus agassizii*) and greater western mastiff bat (*Eumops perotis californicus*) as sensitive species that may also occur in the vicinity of the Project.

Table C-2 Special Status Wildlife Species Found in the Vicinity of the Project				
Agency	**Designation**	**Scientific name**	**Common name**	**Occurrence in Project Area**
USFWS	Threatened	*Gopherus agassizii*	Mojave Desert tortoise	unlikely
USFWS	Endangered	*Microtus mexicanus hualpaiensis*	Hualapai Mexican vole	unlikely
USFWS	Endangered	*Gila elegans*	bonytail chub	no
USFWS	Endangered	*Gila cypha*	humpback chub	no
USFWS	Endangered	*Xyrauchen texanus*	razorback sucker	no
USFWS	Endangered	*Gila seminuda*	Virgin River chub	no
USFWS	Endangered	*Plagopterus argentissimus*	woundfin	no
USFWS	Endangered	*Falco peregrinus anatum*	American peregrine falcon	possible
USFWS	Threatened	*Haliaeetus*	bald eagle	possible

Table C-2 Special Status Wildlife Species Found in the Vicinity of the Project				
Agency	Designation	Scientific name	Common name	Occurrence in Project Area
		leucocephalus		
USFWS	Endangered	*Gymnops californianus*	California condor	possible
USFWS	Threatened	*Strix occidentalis lucida*	Mexican spotted owl	possible
USFWS	Endangered	*Empidonax traillii extimus*	southwestern willow flycatcher	possible
USFWS	Endangered	*Rallus longirostris yumanensis*	Yuma rail clapper	possible
BLM	Sensitive	*Lichanura trivirgata gracia*	rosy boa	unlikely
BLM	Sensitive	*Thomomys umbrinus*	Hualapai Pocket Gopher	possible
BLM	Sensitive	*Accipiter gentilis*	Northern Goshawk	possible
BLM	Sensitive	*Charadrius montanus*	mountain plover	possible
BLM	Sensitive	*Heloderma suspectum cinctum*	Gila monster	possible
AGFD	Sensitive	*Gopherus agassizii*	Sonoran Desert tortoise	unlikely
AGFD	Sensitive	*Eumops perotis californicus*	greater western mastiff bat	unlikely

Mojave Desert Tortoise (*Gopherus agassizii*)
The Mojave population of the desert tortoise is found north and west of the Colorado River. It was listed as "threatened" under the California state Endangered Species Act (ESA) in 1989 and the Federal Endangered Species Act in 1990. A separate, genetically distinct population of desert tortoise has been identified east of the Colorado River in Arizona. The primary reasons for listing the Mojave population include deterioration and loss of habitat, collection for pets or other purposes, elevated levels of predation, disease, and the inadequacy of existing regulatory mechanisms to protect desert tortoises and their habitat. The USFWS has designated critical habitat in Arizona for the Mojave tortoise. This habitat is limited to extensive areas of mesas and steep talus slopes in parts of the Black Mountains. The designated critical habitat is more than 50 air miles north of the Project. It is possible, although unlikely, that this species will occur near the Project Site.

Hualapai Mexican Vole (*Microtus mexicanus hualpaiensis)*
This species is endangered and has been steadily disappearing in its habitat for the last fifty years. However, when it is seen it is typically found in Northern Arizona including the Grand Canyon, and the Flagstaff and Williams areas, and from Navajo Mountain in both Arizona and Southern Utah. This species is also found in the Defiance Plateau in Arizona. The Hualapai mountain vole is associated with the ponderosa pine-Gambel oak habitat type. The Hualapai Mexican vole is not anticipated to occur on or near the Project Site because of the lack of suitable habitat.

Bonytail Chub (*Gila elegans*)
The bonytail chub associated with open water areas of large river channels. Based on the lack of aquatic habitat, the bonytail chub do not occur on or near the Project Site.

Humpback Chub (*Gila cypha*)
Humpback chub are associated with deep, swift waters such as those found in canyons. Based on the lack of aquatic habitat, the humpback chub do not occur on or near the Project Site.

Razorback Sucker (*Xyrauchen texanus*)
The razorback sucker occurs in both riverain situations and in impoundments. Based on the lack of aquatic habitat, the razorback sucker does not occur on or near the Project Site.

Virgin River Chub (*Gila seminuda*)
The Virgin River chub occurs within runs and pools over substrates of sand and sediment in physically and chemically unmodified areas of the Virgin River. The proposed Project Site is outside the Virgin River Basin.

Woundfin (*Plagopterus argentissimus*)
The woundfin is found in the Virgin River within Arizona, Nevada and Utah. The proposed Project Site is outside the Virgin River Basin.

Peregrine Falcon (*Falco peregrinus anatum*)
Peregrines occupy a wide variety of habitats. They are associated with open country near rivers, marshes and coasts. Cliffs are the preferred nesting substrate, however, tall man-made structures (i.e., high rise buildings and towers) may be used (Spahr et al., 1991). Peregrines typically prey on birds within 10 miles of the nest, however, 80 percent occurs within a 1-mile radius of the nest (Spahr et al., 1991). Although peregrines may forage over or migrate through the proposed Project area, no peregrine nest sites have been identified within the vicinity of the Project Site.

Bald Eagle (*Haliaeetus leucocephalus*)
Although bald eagles may forage over or migrate through the proposed Project area, no bald eagle nests or wintering roosts are known to occur in the vicinity of the Project Site.

Feeding areas, perches and night roosts are fundamental elements of bald eagle winter range. Though eagles can fly as far as 24 km (15 mi) to and from these elements, they occur primarily where all three elements are available in close proximity (Swisher, 1964). Although eagle presence in winter is not necessarily related to open water (Swisher, 1964), eagles usually occur near large rivers and lakes (Sprunt and Ligas, 1963). Perches are an essential element in the bald eagles selection of foraging areas. Roosts are areas used for sleeping and providing protection from winter storms. It is possible that this species could occur in the vicinity of the Project area but there were no observed perches or roosts on the Project Site. Therefore, no impacts to this species are anticipated.

California Condor (*Gymnops californianus*)
The California condor is the largest bird in North America with a wingspan of up to 9 feet. Currently, 36 condors have been established into the wild at three sites in California and Arizona. Sixteen are located in the Los Padres National Forest in California, fifteen at Vermillion Cliffs, Arizona, and five at Ventana/Big Sur in California. These populations are currently being studied by biologists. Although it is possible they could venture into the vicinity of the Project Site, it is unlikely.

Mexican Spotted Owl (*Strix occidentalis lucida*)
The Mexican spotted owl typically nests and roosts in mixed coniferous forests (Ganey and Balda, 1989) or ponderosa pine-Gamble oak adjacent to riparian habitats or in canyons. Based on the lack of suitable habitat, the Mexican spotted owl is not expected to occur on or near the Project Site.

Southwestern Willow Flycatcher (*Empidonax traillii extimus*)
The flycatcher breeds in the United States but winters south of the United States. California, Arizona, and New Mexico comprise the majority of the historic and current range of the flycatcher. Flycatchers typically nest in cottonwood-willow associations along streams, rivers or other wetland areas (Tibbets et al., 1994). Although its presence is possible, the southwestern willow flycatcher is not expected to occur on or near the Project Site, based on the lack of suitable habitat.

Yuma Clapper Rail (*Rallus longirostris yumanensis*)
The Yuma clapper rail inhabits dense cattail marshes along the Colorado River. Marsh habitat losses to river water diversion and damming of the Colorado River, dredging operations, mosquito abatement programs, and erosion control efforts have all reduced nesting habitat. (Monson and Phillips, 1981). The Yuma clapper rail is not expected to occur in the vicinity of the Project Site due to the lack of suitable habitat.

Rosy Boa (*Lichanura trivirgata gracia*)
This snake occurs in rocky brush lands and desert areas. They are attracted to areas of permanent water, but water is not required for this species. The rosy boa feeds on small mammals and birds usually at night (Stebbins, 1966). The rosy boa may occur in the vicinity of the Project Site.

Hualapai Pocket Gopher (Thomomys umbrinus)
This species of pocket gopher is typically found in meadows with loose soils. It plays an important role in aeration of soil. It is considered a sensitive species by the BLM. It is possible that this species could occur in the vicinity of the Project site.

Northern Goshawk (***Accipiter gentilis***)
The Northern Goshawk inhabits forested regions of the Northern Hemisphere. This goshawk prefers coniferous forests, but will also inhabit deciduous and mixed forests from sea level to subalpine areas. It is possible that the Northern Goshawk could transitorily occur in the vicinity of the Project Site but it is unlikely due to the lack of suitable habitat.

Gila Monster (*Heloderma suspectum cinctum*)
The Gila monster inhabits lower slopes of mountains and nearby outwash plains in arid or semiarid areas. They frequently occur in canyon bottoms or arroyos with either permanent or intermittent water and irrigated lands or rocky areas containing scattered brush (Stebbins, 1966). The Gila monster may occur in the vicinity of the Project Site.

Mountain Plover (*Charadrius montanus*)
The mountain plover occurs on the high plains of the semi-desert regions of the West. The mountain plover is one of a limited number of shorebird species that lives mainly away from water. Plovers occur in areas of scattered sagebrush and intermittent patches of bunch grasses and cactus (Armbruster et al., 1983). The mountain plover may occur in the vicinity of the Project Site.

Sonora Desert Tortoise (*Gopherus agassizii*)
The "Sonoran population" of the desert tortoise is defined as those occurring south and east of the Colorado River. This species occupies rocky and alluvial slopes of Mojave desert scrub and the Arizona Upland and Lower Colorado subdivisions of the Sonora Desert (Murray and Dickenson, 1996).

Desert tortoise populations began to decline in the 1970s due to disease, human-related mortality, predation, habitat destruction, degradation and fragmentation (Murray and Dickenson, 1996). As a result of these cumulative impacts, tortoise were extirpated from large portions of their geographic habitat. The three categories of desert tortoise habitat designated by the BLM were established to set goals for the management of desert tortoise and their habitats, based on several criteria. Management of Category I and II areas emphasize maintenance of viable desert tortoise populations in areas where all Category I and most Category II conflicts are resolvable. Category III habitats are generally characterized by lower densities of desert tortoise in areas where habitat has been degraded, or where land ownership patterns are such that effective management is difficult.

The BLM has designated areas of Category II and Category III Desert tortoise habitat in the vicinity of the proposed Project. The designated areas are identified as the Hualapai Foothills (Category II), Rawhide Mountain/Dutch Flats (Category III), McConnico (Category III), and Hualapai North (Category III). These areas are all south and east of I-40 and not close to the Project Site.

Greater Western Mastiff Bat (*Eumops perotis californicus*)
The greater western mastiff bat roosts in crevices and shallow caves on cliffs and rock faces. Roosts typically have large openings below to allow the bats to drop several feet before existing the roost. This species is not expected to occur within the vicinity of the Project Site because of lack of suitable habitat.

Potential Effects
The construction and operation of the Northern Arizona Energy Project is not expected to have any adverse impacts on Federal and/or state listed wildlife and plant species of special concern. Site reconnaissance and subsequent studies revealed no areas of suitable habitat or known locations and occurrences of these species within the Project Site. Several species do have the potential to occur in the vicinity of the Project Site but because of the previous construction and human activity directly adjacent to the Project, it is unlikely that any of the potential species will occur at the Project Site. Any impacts will be short-term during construction and minimal.

Even though there is expected to be no impact, special protocols will be implemented should a species of special concern be found on the Project Site during construction. This includes but is not limited to: additional surveys on the Project site, implementation of education programs, mitigation measures for disturbed habitat, and replacement seeding measure for sensitive plants that are disturbed.

EXHIBIT D BIOLOGICAL RESOURCES

As stated in Arizona Corporation Commission Rules of Practice and Procedure R14-3-219:

"List the fish, wildlife, plant life and associated forms of life associated with the vicinity of the proposed sites or route and describe the effects, if any, other proposed facilities will have thereon."

Vegetation

The Project Site is located within a boundary area of five provinces, the Great Basin, Interior, Mohave, Semidesert and Sonoran, each represented by one or more vegetation series. The distribution of these series is driven by biotic responses to precipitation, elevation, topography, exposure, soil type and land use. Information regarding the affected vegetation came from previous soil surveys, site visits, photographs, U.S. Fish and Wildlife Service (USFWS), Bureau of Land Management (BLM) and Arizona State agency publications and contacts, and academic/scientific publications. More detailed descriptions of the vegetation found in each of the subareas of the Project area are provided in the following paragraphs after the general discussion of the provinces. **Table D-1** offers a detailed description of the dominant plants and associated species for each series of the provinces.

The Great Basin province is typified by cold-temperate desert vegetation. This province includes series dominated by woodland species of juniper (*Juniperus*) and pinyon pine (*Pinus edulis*), desert scrub species of cold-adapted sagebrush (*Artemisia*), saltbush (*Atriplex)* and winterfat (*Krascheninnikovia)*, as well as warm-adapted species of rabbitbrush (*Chrysothamnus)*, blackbrush (*Coleogyne ramosissima)*, hopsage (*Grayia*) and horsebrush (*Tetradymia)*. Few cacti establish in this province. Those cacti which do are the smaller species such as pricklypear (*Opuntia*) and globe cactus (*Mammillaria*). Species diversity is typically low and the overstory of a community may often be dominated by only one species or by two or more species existing as co-dominants in an even distribution or as intergraded patches of each dominant. Great Basin series are found in the relatively colder, moister sites of the Project area, at higher elevations, on north-facing slopes or in canyons.

The Interior province series are warm-temperate vegetation dominated by relict broadleaf, deciduous trees and shrubs. These communities are established in the canyons and stream valleys of the proposed Project area which receive greater amounts of precipitation. This province is expressed here by communities dominated by tamarisk (*Tamarix)*, mesquite (*Prosopis)* and willow (*Salix*).

Table D-1 Interrelationships and Characters of Vegetation Series in the Local Area

Biome or province	Series	Vegetative character/ Dominating species	Associated Species	Habitat Character
Great Basin	**mixed grass**	perennial bunchgrasses/mixed - sedges and short and midgrasses including gramas, sacaton, needlegrasses, vine mesquite and galleta	scrub species, pinyon and juniper	This series requires less than 300mm of precipitation winter & spring with 125-200 growing days. Found at elevations below 4000 feet in upper slopes with pinyon-juniper stands or Plains grassland above and desert scrub below.
	mixed scrub	deciduous thicket 1-6 m in height/mixed - shrub live oak, mountain mahogany, snowberry, currants, serviceberry, cliffrose and manzanita and other fruit-bearers	pinyon, juniper, Gambel oak, sagebrush, saltbush, winterfat, rabbitbrush	This series requires 380-535 mm of precipitation a year with 100 growing days. Found at 7500 feet to 9000 feet in elevation in foothills and mountains, above the Great Basin conifer woodland or sagebrush steppe and below subalpine conifers.
	pinyon-juniper shrub live oak mixed shrubs	dense to open stands of pinyon and juniper with well developed understory	shrub live oak, understory of short and midgrasses, snakeweed and groundsel, sagebrush, saltbush, winterfat, rabbitbrush	This series requires about 250-300 mm of precipitation in fall & winter; with 210 growing day. It survives cold winters at 5000 to 7500 feet in elevation. It is found on non mesas, plateaus, piedmonts, slopes, ridges with junipers dominating in the deeper soils.
Interior	**riparian/mesquite forest**	deciduous woodland/mesquite, tamarix, willow, shrub live oak	chenopods, saltgrass, acacias, native and exotic annual forbs and grasses, occasional cottonwood, willow, ash or other broadleaf deciduous trees; small stands of shrubs	This series requires precipitation in winter & spring. Mostly consisting of xeroriparian species along ephemeral streams.
	riparian/mixed riparian strand	mesquite, tamarix, willow, shrub live oak	chenopods, saltgrass, acacias, native and exotic annual forbs and grasses	This series requires winter & spring precipitation and usually forms along ephemeral streams.
Mohave	**mixed scrub**	a two-story scrubland with well developed understory/creosotebush, bursage, yucca spp., brittlebush, shadscale are all found here with no clear dominance	Associated spp. of all series include *Atriplex* spp., *Artemisia* spp., blackbrush, winterfat, Fremont dalea, little-leaved ratany, joint fir, creosotebush, bursage, and brittlebush	This series requires 65-190mm of precipitation in winter & summer; with 210 growing days. It survives cold winters and hot summers at an elevation range of 2000 to 4000 feet on level plains with climatic conditions intermediate to those influencing Great Basin and Sonoran biomes
	Co-dominant associations			
	creosotebush - bursage			This series is found on deep, loose, sandy soils, most often on the upper a of alluvial fans at colder temperatures; on well-drained sandy flats below about 4000 feet in elevation.

Table D-1 Interrelationships and Characters of Vegetation Series in the Local Area

Biome or province	Series	Vegetative character/ Dominating species	Associated Species	Habitat Character
	brittlebush - creosotebush			This series is found on deep, loose, sandy soils, most often on the upper a of alluvial fans at warmer temperatures; on well-drained sandy flats below about 400 feet.
	creosotebush - yucca		Although Joshua trees are typically associated with this series, none grow in the Project area	This series is found on soils with well-developed soil pavement and a caliche layer close to the surface.
Semi-desert	**mixed grass**	a warm-temperate scrub-grassland transition zone/Tobosa grass, black grama	grama grasses, bush muhly, three awns, arizona cottontop, curly mesquite grass, tanglehead grass, vine mesquite grass, succulents and forbs, exotic annual grasses	This series requires at least 250-450 mm of precipitation in winter & summer pulses with 210-260 growing day. I flourishes in mild winters, hot summers; and survives strong winds spring & fall at elevations from 3600 -5600 feet and lies above the Sonoran series and below the Plains grasslands.
	mixed scrub	a warm-temperate scrub-grassland transition zone/sotols, beargrasses, agaves, yuccas	cat-claw acacia, mesquites, *Ephedra* spp., sumac, ocotillo, *Opuntia* spp.	This series requires 250-450 mm of precipitation in winter & summer pulses and has 210-260 growing days with mild winters, hot summers. It can be found at an elevation of 3600 -5600 feet and lies above the Sonoran series and below Plains grasslands.
Sonoran (Lower Colorado River Valley subdivision)	**creosotebush-bursage scrub**	open, simple, arboreal appearance; subtropical genera characterized by succulents and cacti/creosote bush and bursage as co-dominants	big galleta, indigo bush, *Atriplex* spp., ocotillo, bursage, brittlebush, woolly plantain, mesquite, ironwood, smoketree, blue palo verde	This series requires warmer winters and very dry conditions to encourage establishment of this biome rather than Mohave scrub series. Bursage dominates in sandier soils, creosotebush in finer soils less than 3500 feet in elevation.

Source: (Brown 1994)

The Semidesert province is warm-temperate community of west central Arizona which occupies the warmer mid-slope sites of foothills and higher mountain slopes in the proposed Project area. Grassland typically establishes in the higher elevations of this zone and scrub on the lower. Plants commonly found in these sites include grama grasses (*Bouteloua spp.)*, three awns (*Aristida spp.*), curly mesquite grass (*Hilaria spp.)*, yucca species (*Yucca spp.*), cat-claw acacia (*Acacia greggii*) and ephedra species (*Ephedra spp.*).

The Mohave province occupies the colder low elevation alluvial fans (bajadas) and well-drained sandy flats. The alluvial fans are hosts to two provinces, with the Mohave occupying the relatively colder, moister sites, the Sonoran the warmer. Mohave habitats are particularly diverse, with established populations of endemic annuals, including *Euphorbia* (spurge) species and six-weeks three-awn (*Stipagrostis pungens*).

The Sonoran province contains tropical-subtropical vegetation typical of Mexican deserts. Several scrub series of this province occupy the warmer low elevation alluvial fans (bajadas) and well-drained sandy flats of the west-facing slope of the Sacramento Valley. Although the species typical of this community are the very large, tree-like cacti/succulents, in the vicinity of the Project Site this province is co-dominated by creosotebush (*Larrea tridentate)* and bursage (*Ambrosia dumosa*). **Table D-2** offers a checklist of plants which may be found in the vicinity of the Project Site.

Table D-2 Checklist of Plants Potentially Occurring Within Vicinity of the Project Site

Semi-Desert Grasslands	
Trees	
one-seed juniper	*Juniperus monosperma*
mesquite	*Prosopis juliflora*
Shrubs	
acacia	*Acacia spp.*
desert hackberry	*Celtis pallida*
hopbush	*Dodonaea viscosa*
joint-fir	*Ephedra spp.*
ocotillo	*Fouquieria splendens*
broom snakeweed	*Guierrezia sarothrae*
creosote bush	*Larrea tridentata*
groundsel	*Senecio spp.*
soaptree yucca	*Yucca elata*
Grasses and Forbs	
poverty three-awn	*Aristida divaricata*
sprucetop grama	*Bouteloua chondrosioides*
sideoats grama	*B. curtipendula*
black grama	*B. eriopoda*
blue grama	*B. gracilis*
hairy grama	*B. hirsuta*
broom grasses	*Bromus spp.*
buffalo grass	*Buchloe dactyloides*
cryptanth	*Cryptantha spp.*
plains lovegrass	*Eragrostis intermedia*
tanglehead	*Heteropogon contortus*
tobosa	*Hilaria mutica*

Table D-2 Checklist of Plants Potentially Occurring Within Vicinity of the Project Site	
lupine	*Lupinus sp.*
wolftail	*Lycurus phleiodes*
bush muhly	*Muhlenbergia porteri*
vine mesquite grass	*Panicum obtussum*
little bluestem	*Schizachyrium scoparium*
bristlegrass	*Setaria sp.*
mallows	*Sphaeralcea spp.*
Wright sacaton	*Sporobolus wrightii*
buffalo grass	*Buchloe dactyloides*
Cactus	
hedgehog cactus	*Echinocereus sp.*
Wright pincushion	*Mammillaria wrightii*
prickly pears/chollas	*Opuntia spp.*
tree cholla	*O. imbricata*
Engelman prickly pear	*O. phaeacantha*
XERORIPARIAN HABITAT	
Trees	
crucifixion thorn	*Canotia holacantha*
blue Paloverde	*Cercidium floridum*
smoketree	*Psorothamnus spinosus*
mesquite	*Prosopis spp.*
Shrubs	
white-thorn acacia	*Acacia consticta*
catclaw	*A. greggii*
desert broom	*Buccharis sarothroides*
anderson thornbush	*Lycium andersonii*
cheesebush or burrobush	*Hymenoclea salsola*
Grasses and Forbs	
sand verbena	*Abronia spp.*
milk vetch	*Astragalus spp.*
spiderling	*Boerhaavia spp.*
bromegrass	*Bromus rubens*
desert senna	*Cassia armata*
spurges	*Euphorbia spp.*
MOHAVE DESERTSCRUB	
Trees	
joshua tree	*Yucca brevifolia*
Shrubs	
saltbush	*Atriplex spp.*
agave	*Agave spp.*
white bursage	*Ambrosia dumosa*
white brittlebush	*Encella farinosa*
joint-fir	*Ephedra funerea*
rough joint-fir	*E. nevadensis*
desert buckwheat	*Eriogonum deserticola*
desert trumpet	*E. inflatum*
hopsage	*Grayia spinosa*
snakeweed	*Gutierrezia microcephala*
burrobush	*Hymenoclea salsola*

Table D-2 Checklist of Plants Potentially Occurring Within Vicinity of the Project Site	
little-leaved ratany	*Krameria parviflora*
creosotebush	*Larrea tridentata*
anderson thornbush	*Lycium andersonnii*
spiny mendora	*Menodora spinescens*
trixis	*Trixis californica*
mohave yucca	*Yucca schidigera*
Cactus	
desert coryphantha	*Coryphantha vivipera var. desertii*
engelman hedgehog	*Echinocereus engelmanii*
mammillaria	*Mammillaria spp.*
chollas, prickly pears	*Opuntia spp.*
buckhorn cholla	*O. acanthocarpa*
silver cholla	*O. echinocarpa*
mohave Prickly Pear	*O. erinacea*
Grasses and Forbs	
Sand verbena	*Abronia spp.*
milk vetch	*Astragalus spp.*
Three awn	*Aristida spp.*
spiderling	*Boerhaavia spp.*
bromegrass	*Bromus rubens*
desert senna	*Cassia armata*
spurges	*Euphorbia spp.*
sixweeks fescue	*Festucca octoflora*
big galleta	*Hilaria rigida*
bush muhly	*Muhlenbergia porteri*

The Project area is within desert scrub community situated on west-facing alluvial fans. The higher locations are occupied by Mohave creosotebush-bursage-mixed scrub on deeper, sandier soils and Mohave creosotebush-yucca on soils richer in carbonates. The warmer, drier, lower locations are occupied by Sonoran creosotebush-bursage.

Wetlands

No wetlands occur on or near the Project Site. Wetlands in this part of Mohave County are limited to relatively rare springs. Riparian crossings in the proposed Project area are dry washes which flow only during storm events. Although the additional soil moisture during these brief periods is enough to allow the growth of drought tolerant species like mesquite, the lack of residual soil moisture, and the scouring of the high energy flow of these intermittent streams and the sediment deposition on existing vegetation as waters recede prohibit the growth of most plants.

Potential Effects

Effects to vegetation will be associated with ground disturbance related to construction of the project on the 8-acre site and the short pipeline and transmission line interconnections. Temporary vegetation loss will occur from trampling and soil compaction during the construction activities listed above. Revegetation with native seed mixes will greatly reduce the loss of biodiversity within the proposed Project area. No long term effects on vegetation beyond the loss of the 8-acre site are anticipated.

Wildlife

Wildlife expected to be present in the vicinity of the Project Site include big game, predators, small mammals, songbirds, raptors and reptiles. Due to the limited amount of permanent water resources within the area, aquatic and amphibian species do not occur. A checklist of wildlife which may in the vicinity of the Project Site is found in **Table D-3**.

A number of big game mammals occur in the area. Mule deer (*Odocoileus hemionus*) are the most widely distributed and popular big game species within Arizona. The Project is within mule deer habitat, however it is not high quality habitat.

Desert bighorn sheep (*Ovis canadensis nelsoni*) inhabit dry, desert mountain ranges within the Great Basin, Mojave, Sonora, and Chihuahuan deserts. Sheep prefer foothills near rocky cliffs and permanent water when seasonally available. Generally, sheep inhabit a summer range, near available water sources and a winter range, that has good browse. Sheep are active during the day with minimal activity during extreme temperatures and inhabit the rough terrain associated with the canyons and cliffs within the Black Mountains west of the Sacramento Valley, over 10 miles from the Project Site.

Within Arizona, antelope (*Antilocapra americana*) occur from the deserts to the grasslands of the high plateaus. They prefer areas of grasses and scattered shrubs with rolling hills and dissected hills and mesas (Hoffmeister, 1986). Antelope are not anticipated to occur near the proposed Project Site.

Predators use habitat types within the proposed Project area. Typical species may include kit fox (*Vulpes macrotis*), hooded skunk (*Mephitis macroura*), bobcat (*Felis rufus*), badger (*Taxidea taxus*), striped skunk (*Mephitis mephitis*), and coyote (*Canis latrans*). Mountain lions (*Felis concolor*) may also occur in the mountains in areas where mule deer are abundant.

Numerous small mammal species occur in the vicinity including desert shrew (*Notiosorex crawfordi*), California myotis (*Myotis californicus*), Yuma myotis (*Myotis yumanensis*), greater western mastiff bat (*Eumops perotis*), Mexican free-tailed bat (*Tadarida brasiliensis*) antelope jackrabbit (*Lepus alleni*), Harris' antelope squirrel (*Ammospermophilus harrisii*) and mesquite mouse (*Peromyscus merriami*). Within the Mohave habitat type the following species may occur: spotted bat (*Euderma maculata*), Arizona pocket mouse (*Perognathus amplus*), desert kangaroo rat (*Dipodomys deserti*) and desert woodrat (*Neotoma lepida*)(Hall 1998).

Density and diversity of songbirds species within the proposed Project area varies by season. Typical species include rock doves (*Columba livia*), mourning doves (*Zenaida macroura*), lesser nighthawk (*Chordeiles acutipennis*), common poorwill (*Phalaenoptilus nuttallii*), yellow-shafted flicker (*Colaptes auratus*), ash-throated flycatcher (*Myiarchus cinerascens*), western kingbird (*Tyrannus verticalis*), common raven (*Corvus corax*), verdin (*Auriparus flaviceps*), cactus wren (*Campylorhynchus brunneicapillus*), black-tailed gnatcatcher (*Polioptila melanura*), phainopepla (*Phainopepla nitens*) and white-crowned sparrow (*Zonotrichia leucophrys*).

Several raptor species are known to occur seasonally in the vicinity of the Project Site. Species include turkey vulture (*Cathartes aura*), golden eagle (*Aguila chrysactos*), red-tailed hawk (*Buteo jamaicensis*), American kestrel (*Falco sparverius*) and Harris's hawk (*Parabuteo unicinctus*

Reptile species known or expected to occur near the Project Site include desert iguana (*Dispsosaurus dorsali*), zebra-tailed lizard (*Callisaurus draconoides*), desert collared lizard (*Crotaphytus insularis*), western whiptail (*Cnemidophorus tigris*), gopher snake (*Pituophis melanoleucus*), common kingsnake (*Lampropeltis getulus*), speckled rattlesnake (*Crotalus mitchellii*) and Mohave rattlesnake (*Crotalus scutulatus*).

Table D-3 List of Wildlife Which May Occur in the Vicinity of the Project Site

BIRDS	
Eared Grebe	*Podiceps nigricollis*
Turkey Vulture	*Cathartes aura*
Harris' Hawk	*Parabuteo unicinctus*
Red-tailed Hawk	*Buteo jamaicensis*
American Kestrel	*Falco sparverius*
Gambel's Quail	*Callipepla gambelii*
Killdeer	*Charadrius vociferus*
Rock Dove	*Columba livia*
White-winged Dove	*Zenaida asiatica*
Mourning Dove	*Z. macroura*
Inca Dove	*Scardafella inca*
Greater Roadrunner	*Geococcyx californicus*
Barn Owl	*Tyto alba*
Western Screech-owl	*Otus kennicottii*
Great Horned Owl	*Bubo virginianus*
Lesser Nighthawk	*Chordeiles acutipennis*
Common Poorwill	*Phalaenoptilus nuttallii*
White-throated Swift	*Aeronautes saxatilis*
Black-chinned Hummingbird	*Archilochus alexandri*
Anna's Hummingbird	*Calypte anna*
Costa's Hummingbird	*Calypte costae*
Gila Woodpecker	*Melanerpes uropygialis*
Ladder-backed Woodpecker	*Dendrocopos scalaris*
Northern Flicker	*Colaptes cafer*
Gilded Flicker	*C. auratus*
Black Phoebe	*Sayornis nigricans*
Say's Phoebe	*S. saya*
Ash-throated Flycatcher	*Myiarchus cinerascens*
Brown-crested Flycatcher	*M. tyrannulus*
Western Kingbird	*Tyrannus verticalis*
Horned Lark	*Eremophila alpestris*
Northern Rough-winged Swallow	*Stelgidopteryx serripennis*
Common Raven	*Corvus corax*
Verdin	*Auriparus flaviceps*
Cactus Wren	*Campylorhynchus brunneicapillus*
Rock Wren	*Salpinctes obsoletus*
Canyon Wren	*Catherpes mexicanus*
Bewick's Wren	*Troglodytes bewickii*
Ruby-crowned Kinglet	*Regulus calendula*
Black-tailed Gnatcatcher	*Polioptila melanura*
Northern Mockingbird	*Mimus polyglottos*
Curve-billed Thrasher	*Toxostoma curvirostre*
LeConte's Thrasher	*T. lecontei.*

Table D-3 List of Wildlife Which May Occur in the Vicinity of the Project Site	
Phainopepla	*Phainopepla nitens*
Loggerhead Shrike	*Lanius ludovicianus*
European Starling	*Sturnus vulgaris*
Bell's Vireo	*Vireo bellii*
Solitary Vireo	*Vireo solitarius*
Wilson's Warbler	*Wilsonia pusilla*
Northern Cardinal	*Cardinalis cardinalis*
Pyrrhuloxia	*Cardinalis sinuatus*
Green-tailed Towhee	*Pipilo chlorurus*
Canyon Towhee	*Pipilo fuscus*
Brewer's Sparrow	*Spizella breweri*
Black-throated Sparrow	*Aimophila bilineata*
White-crowned Sparrow	*Zonotrichia leucophrys*
Brown-headed Cowbird	*Molothrus ater*
Hooded Oriole	*Icterus cucullatus*
Scott's Oriole	*Icterus parisorum*
House Finch	*Carpodacus mexicanus*
House Sparrow	*Passer domesticus*
MAMMALS	
Desert shrew	*Notiosorex crawfordi*
California Leaf-nosed Bat	*Macrotus californicus*
Lesser Long-nosed Bat	*Leptonycteris curosae yerbabuena*
Yuma Myotis	*Myotis yumanensis*
Cave Myotis	*M. velifer*
California Myotis	*M. californicus*
Western Pipistrelle	*Pipistrellus hesperus*
Big Brown Bat	*Eptesicus fuscus*
Southern Yellow Bat	*Lasiurus ega*
Pallid Bat	*Antrozous pallidus*
American Free-tailed Bat	*Tadarida brasiliensis*
Pocketed Free-tailed Bat	*T. femorosacca*
Desert Cottontail	*Sylvilagus audubonii*
Black-tailed Jack Rabbit	*Lepus californicus*
Harris' Antelope Squirrel	*Ammospermophilus harrisii*
Rock Squirrel	*Spermophilus variegatus*
Round-tailed Ground Squirrel	*S. tereticaudus*
Botta's Pocket Gopher	*Thomomys bottae*
Arizona Pocket Mouse	*Perognathus amplus*
Bailey's Pocket Mouse	*P. baileyi*
Rock Pocket Mouse	*P. intermedius*
Desert Pocket Mouse	*P. penicillatus*
Banner-tailed Kangaroo Rat	*Dipodomys spectabilis*
Merriam's Kangaroo Rat	*D. merriami*
Desert Kangaroo Rat	*D. deserti*
Western Harvest Mouse	*Reithrodontomys megalotis*
Cactus Mouse	*Peromyscus eremicus*
Deer Mouse	*P. maniculatus*
Southern Grasshopper Mouse	*Onychomys torridus*
Arizona Cotton Rat	*Sigmodon arizonae*
White-throated Wood Rat	*Neotoma albigula*

Table D-3 List of Wildlife Which May Occur in the Vicinity of the Project Site	
Desert Wood Rat	*N. lepida*
House Mouse	*Mus musculus*
Coyote	*Canis latrans*
Kit Fox	*Vulpes macrotis*
Gray Fox	*Urocyon cinereoargenteus*
Badger	*Taxidea taxus*
Western Spotted Skunk	*Spilogale gracilis*
Mountain Lion	*Felis concolor*
Bobcat	*F. rufus*
Collared Peccary	*Tayassu tajacu*
Mule Deer	*Odocoileus hemionus*
REPTILES AND AMPHIBIANS	
Toads	
Couch's Spadefoot Toad	*Scaphiopus couchi*
Southern Spadefoot Toad	*S. multipicatus*
Sonoran Desert Toad	*Bufo alvarius*
Great Plains Toad	*B. cognatus*
Sonoran Green Toad	*B. debilis*
Red-spotted Toad	*B. punctatus*
Tortoises/Turtles	
Desert Tortoise	*Gopherus agassizi*
Lizards	
Desert Banded Gecko	*Coleonyx variegatus*
Chuckwalla	*Sauromalus obesus*
Desert Iguana	*Dipsosaurus dorsalis*
Zebra-tailed Lizard	*Callisaurus draconoides*
Long-nosed Leopard Lizard	*Gambelia wislizenii*
Desert Spiny Lizard	*Sceloporus magister*
Side-blotched Lizard	*Uta stansburiana*
Desert Horned Lizard	*Phrynosoma platyrhinos*
Regal Horned Lizard	*P. solare*
Tree Lizard	*Urosaurus ornatus*
Long-tailed Brush Lizard	*U. graciosus*
Collared Lizard	*Crotaphytus collaris*
Western Whiptail	*Cnemidophorus tigris*
Canyon Spotted Whiptail	*C. burti*
Gila Monster	*Heloderma suspectum*
Snakes	
Western Blind Snake	*Leptophlops humilis segregus*
Spotted Leaf-nosed Snake	*Phyllorhynchus decurtatus*
Saddled Leaf-nosed Snake	*P. brownii*
Coachwhip Sonoran Whipsnake	*Masticophis flagellus M. bilineatus*
Desert Patch-nosed Snake	*Salvadora hexalepis*
Glossy Snake	*Arizona elegans*
Gopher Snake	*Pituophis melanoleucus*
Common Kingsnake	*Lampropeltis getulus*
Long-nosed Snake	*Rhinocheilus lecontei marcianus*
Ground Snake	*Sonora semiannulate*
Banded Sand Snake	*Chilomeniscus cinctus*
Western Shovel-nosed Snake	*Chionactis occipitalis*

Table D-3 List of Wildlife Which May Occur in the Vicinity of the Project Site	
Night Snake	*Hypsiglena torquata*
Southwestern Black-headed Snake	*Tantilla hobartsmithii*
Arizona Coral Snake	*Micruroides euryxanthus*
Lyre Snake	*Trimophodon biscutatus*
Western Diamondback Rattlesnake	*Crotalus atrox*
Speckled Rattlesnake	*C. mitchelli*
Mohave Rattlesnake	*C. scutulatus*

Potential Effects

Potential impacts to wildlife associated with the construction of the Project will be minimal because of the limited amount of habitat that will be impacted by the Project. Construction activities associated with the Project will minimally disturb birds, small mammals, reptiles, and big game mammals currently utilizing these habitats. The short-term displacement of animals will be related to the increased activity and noise associated with construction.

These construction effects are expected lessened by the fact that the Project will be built next to Griffith, an existing power generation facility. Operation of the existing facility already generates noise and has associated human activity.

Long-term effects include minimal habitat loss on the 8-acre site. Since all of the habitats encountered on or near the Project Site are widely distributed in the region, loss of a small portion of this habitat will not affect the viability of any species. Riparian and wetland areas, which exhibit the greatest abundance of diversity within the desert communities, will not be impacted, since they are not present on or near the proposed Project Site.

EXHIBIT E SCENIC AREAS, HISTORIC SITES AND STRUCTURES, ARCHAEOLOGICAL SITES

As stated in Arizona Corporation Commission Rules of Practice and Procedure R14-3-219:

"Describe any existing scenic areas, historic sites and structures or archaeological sites in the vicinity of the proposed facilities and state the effects, if any, the proposed facilities will have thereon."

SCENIC AREAS/VISUAL RESOURCES

The Project Site is in a transition area between the Basin and Range and the Colorado Plateau physiographic provinces. The landscape of the general area is characterized by mountain ranges trending north and south with long, linear valleys in between the ranges. Geologic formations provide a diverse, scenic terrain. The Project Site lies within the Sacramento Valley, adjacent to the western and northern margins of the Hualapai Mountains. The valley consists of a broad, exposed, flat to undulating terrain sparsely vegetated with low growing desert scrub. Much of the land in the valley outside of Kingman is largely unmodified. These areas include lands under management by the Bureau of Land Management. The Hualapai Mountains to the east and the Black Mountains to the west provide a scenic backdrop to views of the valley.

The Project Site is located on private lands approximately 0.25 miles west of Interstate 40 (I-40). The surrounding landscape, as seen from the highway, consists of sparsely vegetated, flat terrain backdropped by nearby mountains. The affected viewshed contains the project site, the I-40 corridor to the north and south of the site, and surrounding public and private lands that will provide a view of the Project. Distance and intervening landforms to the northeast of the site exclude existing and proposed residential development, and the city of Kingman from the viewshed area. Field reconnaissance verified that the proposed facilities will not be visible from scenic highway corridors (Oatman Road) and existing and proposed residential developments in nearby Golden Valley.

The scenic quality of the landscape within and surrounding the Project Site is low because the site is located within the I-40 Industrial Corridor, which contains existing industrial development. Scenic quality is also low because of the lack of variety and contrast in landform, vegetation, and interesting features, and because the characteristic landforms and desert vegetation is common throughout the affected viewshed and the surrounding desert landscape. The sensitivity level, which is a measure of public concern for quality, is low because the majority of viewers will be traveling at highway speeds on I-40; therefore the Project Site is within the viewshed of motorists for a very brief period of time. In addition, views in the foreground distance zone of any viewing area, including the highway, is dominated by the existing Griffith Energy Project (Griffith), a 600 MW combined cycle electric generating facility located just south of the Project Site. There are no significant scenic resources in the vicinity that will be affected by the Project.

The Mohave County General Plan has developed Scenic Resource Goals to preserve, protect and enhance scenic routes and vistas that characterize the rural beauty of Mohave County. In order to implement the goal, the county has identified key scenic routes throughout the county. The scenic routes closest to the Project site are I-40 north of the intersection of State Route 66 (Oatman Road),

and Oatman Road between Oatman and I- 40. Oatman Road is part of historic Route 66, a National Back Country Byway. The Project Site is not within the viewshed of these key scenic routes. Griffith is also not visible from the scenic routes.

Potential Effects on Scenic Quality

Potential visual effects from the development of the Project will be changes to the physical setting and visual quality of the landscape and views from sensitive viewpoints, including travel routes, residences, and popular use areas. The Project will not change the character of the existing landscape. The Project will repeat the form, line, color, scale, and texture elements of Griffith, which characterizes the existing landscape and is in close proximity to the Project Site.

The Project will be an obvious addition to the existing industrial character of the landscape, as it will be within the viewshed of travelers on the I-40. The geometric, rectangular block forms of the Project will be visible from the highway but will be painted to blend with landscape colors and Griffith, and will result in a low to moderate contrast with the surrounding landscape.

The most visible component of the Project from all viewpoints will be the exhaust stacks. The Project will not include cooling towers, therefore there will be no visual impact from a steam plume emanating from the Project. Each of the four (4) CTGs will have an attached exhaust stack that will be approximately 85 feet in height and 10 feet in diameter. The four (4) exhaust stacks will create new linear and vertical forms that will be obvious to viewers on I-40. However, the Project stacks will be smaller in scale that those existing at Griffith with a height of 130 feet. Because the Project stacks will repeat the existing line and form, but will be smaller in scale than the existing Griffith stacks, they will be difficult to discern when viewed from most viewing areas, depending on the angle of view. The Project will not be visible from existing or proposed residential developments north and west of the Project Site. Viewed from the three wilderness areas in the vicinity, the Project will be difficult to discern from Griffith and the surrounding facilities as viewed from the three wilderness areas.

The Project will be artificially lighted as necessary to enhance the safety of Project personnel. Night-lighting will increase the visibility of the facility to all viewpoints. The light, glare or backscatter illumination visible to sensitive viewpoints will be minimized by the use of directional shielding of lights. The off-site visibility and potential glare of the lighting will be restricted by the screening structures to be placed around the facility's major equipment, specification of non-glare fixtures, and placement of lights to direct illumination into only those areas where it is needed.

The Federal Aviation Administration (FAA) requires that any permanent object that exceeds an overall height of 200 above ground level or exceeds any obstruction standard contained in FAR Part 77 (2000a) be lighted with a flashing lighting system. Because the exhaust stacks are 85 feet in height and more than three nautical miles from the nearest airport (as per FAR Part 77), blinking safety lights will not need to be installed (FAA 2000b).

There will be no effects to visual resources from the construction and operation of infrastructure for gas, water, and electric interconnections as these interconnection facilities will be accessed within the Project Property or the adjacent Griffith property.

SENSITIVE VIEWPOINTS

Sensitive viewpoints consist of locations from which a significant number of people who have a concern for scenic resources will view a landscape, or will be exposed to project activities. Sensitive viewpoints are generally located on transportation routes, residential areas and recreational use areas.

Key Observation Points (KOPs) have been selected that represent sensitive viewpoints located in on nearby transportation routes and residential areas. These KOPs were used to evaluate the impact to visual quality from the construction and operation of the Project. **Figure E-1** provides a map that illustrates where these photos were taken.

The CTGs, exhaust stacks, and associated facilities will be visible from viewpoints along I-40 but will be difficult to discern from the surrounding landscape at more than a one mile distance, depending on the presence of intervening landforms. This is because the Project components will be painted to harmonize with the colors of the surrounding landscape, so that the small scale and colors of the facilities will tend to blur form, line, and textural contrasts at longer distances. In addition, the project components will be very similar in appearance (although significantly smaller in size) to those existing at Griffith.

Eight KOPs were selected to represent views of the Project from I-40 and nearby county roads that cross through undeveloped areas currently designated as a Rural Development Area in the Mohave County General Plan. There are currently no existing or proposed residential developments for these lands; however, there is potential for residential development in the future. The KOPs were selected to best represent a significant number of people with a concern for visual quality that will view the Project.

KOP 1 is located 0.3 mile northeast of the northeast corner of the Project Site on southbound I-40. The view faces southeast toward Haul Road, the northeast corner of the Project Site and Griffith. Haul Road is at the north boundary of the Project Property. **Figure E-2** provides a photo that illustrates the appearance of the existing landscape and a simulation of the Northern Arizona Energy Project.

KOP 2 is located on the southeast corner of Haul Road and the north terminating end of Apache Road about 0.2 miles from the northwest corner of the Project Site. The view faces southeast toward the west side of the Project Site and the northwest side Griffith. **Figure E-3** provides a photo that illustrates the appearance of the existing landscape and a simulation of the Northern Arizona Energy Project.

KOP 3 is located on Apache Road about 0.85 mile from the southwest corner of the Project Site. The view faces northeast, providing a view of Griffith. **Figure E-4** provides a photo that illustrates the appearance of the existing landscape and a simulation of the Project to the north of Griffith.

KOP 4 is located on Apache Road about 0.64 mile from the northwest corner of the Project Site. The view faces southeast, providing a view of Griffith. **Figure E-5** provides a photo that illustrates the appearance of the existing landscape and a simulation of the Northern Arizona Energy Project.

KOP 5 is located on southeast corner of Shinarump Road and Sacramento Road about 7.5 miles from the northwest corner of the Project Site. This KOP is located in an area where future residential development may occur. The view faces southeast toward the location of Project and Griffith. **Figure E-6** provides a photo of this view that illustrates that the Project and Griffith are not visible from this location.

KOP 6 is located on southeast corner of Aquarius Road and Yuma Road about 3.8 miles from the northwest corner of the Project Site. This KOP is also located in an area where future residential development may occur. The view faces southeast toward the Project Site. **Figure E-7** provides a photo of this view that illustrates that the Project and Griffith are not visible from this location.

KOP 7 is located on southeast corner of Oatman Highway (Historic Route 66) and Quartzite Road about 3.5 miles from the northwest corner of the Project Site. This KOP is also located on the historic highway and near an area where future residential development may occur. The view faces southeast toward the location of the Project Site. **Figure E-8** provides a photo of this view that illustrates that the Project and Griffith are not visible from this location.

KOP 8 is located midway between Dawson Drive and Quartzite Road on Centennial Road about 2.4 miles from the northwest corner of the Project Site. This KOP is located in an area where future residential development may occur. The view faces southeast and **Figure E-9** provides a photo that illustrates that the Project is difficult to see next to Griffith because of the small scale of the Project at this distance.

CULTURAL RESOURCES

Based on current inventories, archaeological and historical overviews, and previous surveys on this site, the proposed Project area is expected to contain few, if any prehistoric or historic cultural resources.

Cultural resources in the open basin of the Sacramento Valley are generally widely distributed at low density and occur as either spatially narrow and linear or small and point-focused entities. Historic cultural resources are likely to be more common east of the Project area along the historic corridors of Route 66 and the AT&SF railroad, and in the foothills of the Hualapai Mountains. Review of AZSITE records, and site cards and other records at the Arizona State Museum (ASM), and BLM Kingman office identified four previous cultural resource studies and two formally recorded prehistoric or historic cultural resource sites within one mile of the Project area. Three of the previous cultural resource investigations were for the existing Griffith and associated utility corridors (Ezzo and Späth 1998; Becker and Huber 2001; Becker et al. 2001).

Previous environmental analyses that included areas within or near the project (BLM 1996; Western and BLM 1999) indicated a very low probability of cultural resources in the Project area. Potential resources identified in nearby settings, such as the foothills of the Hualapai Mountains, included, prehistoric rock rings, prehistoric and historic trails, and historic roads, railroads, and utility lines. Prehistoric and historic resources in the general region, principally in nearby mountain ranges, include rockshelters, prehistoric and historic artifacts scatters, rock rings and cleared circles, trails, rock art, hearths and roasting pits, roads, railroads, cairns, and mining prospects. Cultural resources most likely to occur in a setting like the Project area are foot trail segments and gravel prospects.

The Project area was within the survey completed for Griffith (Ezzo and Späth 1998). The survey identified no cultural resources and no areas of Holocene deposition that might contain buried cultural materials or features. No surface or subsurface cultural resources exist within the Project area. Construction, operation, and maintenance of the Project will not adversely impact any significant historic properties. Cultural resource clearance is recommended for the Project. If unanticipated cultural materials or unmarked human remains are discovered during construction, the contractor will be required to cease work in the immediate vicinity of the discovery and take appropriate measures to protect the remains from further inadvertent or intentional disturbance. An archaeological contractor will be contacted immediately to identify and evaluate the remains, and State Historic Preservation Office (SHPO) will be notified within 24 hours of the discovery and preliminary assessment.

Kingman

T. 21 N.
T. 20 N.
T. 20 N.
T. 19 N.
R. 18 W.
R. 17 W.

223
40

Shinarump Rd.
Aztec Rd.
Bacobi Rd.
Prescription Rd.
Sacramento Rd.
Centennial Rd.
Garnet Rd.
Desert View Trl.
Tombstone Trl.
Acquarius Rd.
Ash Dr.
Oatman Highway (Historic 66)
Ramada Rd.
Quartzite Rd.
Yuma Rd.
Dawson Dr.
Paradise Rd.
Geronimo Rd
Navajo Dr.
W. Yucca Dr.
Apache Rd.
Frontage Rd.

1
2
3
4
5
6
7
8

Northern Arizona Energy Project

Project Location

Legend

- I 40 Industrial Corridor Boundary
- Golden Valley Holdings
- Northern Arizona Energy Property Boundary
- Key Observation Point

N
W E
S

1 0.5 0 1
Miles

Transverse Mercator Projection
1983 North American Datum
Zone 12
Meters

NORTHERN ARIZONA ENERGY PROJECT

Figure E-1
KOP Locations

ANALYSIS AREA: MOHAVE COUNTY, ARIZONA	
Date: 02/15/2007	File: 2516/KOP.MXD
Created By: JG	Layout: KOP PDF

Existing Condition
Looking southwesterly from Interstate 40 down Haul Road at existing Griffith Energy Project.

Photo Simulation
Simulation of Northern Arizona Energy Project from Interstate 40 looking down Haul Road.

NORTHERN ARIZONA ENERGY PROJECT

Figure E-2
Photo Simulation

ANALYSIS AREA: MOHAVE COUNTY, ARIZONA	
Date: 02/12/2007	File: 2516/-KOP-1 .MXD
Drawn By: EC	Layout: Figure E-2 PDF

Existing Condition
Looking southeast from intersection of Haul Road and Apache Road at existing Griffith Energy Project.

Photo Simulation
Simulation of Northern Arizona Energy Project from the intersection of Haul Road and Apache Road looking southeast.

NORTHERN ARIZONA ENERGY PROJECT

Figure E-3
Photo Simulation

ANALYSIS AREA: MOHAVE COUNTY, ARIZONA	
Date: 02/12/2007	File: 2516/-KOP-2 .MXD
Drawn By: EC	Layout: Figure E-3 PDF

Existing Condition
Looking northeast from Apache Road at existing Griffith Energy Project.

Photo Simulation
Simulation of Northern Arizona Energy Project from Apache Road.

NORTHERN ARIZONA ENERGY PROJECT	
Figure E-4 *Photo Simulation*	
ANALYSIS AREA: MOHAVE COUNTY, ARIZONA	
Date: 02/12/2007	File: 2516/-KOP-3 .MXD
Drawn By: EC	Layout: Figure E-4 PDF

Existing Condition
Looking southeast down Apache Road near Dawson Drive at existing Griffith Energy Project.

Photo Simulation
Simulation of Northern Arizona Energy Project down Apache Road near Dawson Drive.

NORTHERN ARIZONA ENERGY PROJECT	
Figure E-5 *Photo Simulation*	
ANALYSIS AREA: MOHAVE COUNTY, ARIZONA	
Date: 02/12/2007	File: 2516/-KOP-4 .MXD
Drawn By: EC	Layout: Figure E-5 PDF

Existing Condition

Looking southeast from the corner of Shinarump Road and Sacramento Road facing Golden Valley Holdings about 7.5 miles from the northwest corner of the Project site. The Northern Arizona Energy Project and existing Griffith Energy Project are not visible from this location.

NORTHERN ARIZONA ENERGY PROJECT

Figure E-6
Key Observation Point 5

ANALYSIS AREA: MOHAVE COUNTY, ARIZONA	
Date: 02/12/2007	File: 2516\-KOP-5.MXD
Drawn By: EC	Layout: Figure E-6 PDF

Existing Condition
Looking southeast from the corner of Aquarius Road and Yuma Road about 3.8 miles from the northwest corner of the Project site.
The Northern Arizona Energy Project and existing Griffith Energy Project are not visible from this location.

NORTHERN ARIZONA ENERGY PROJECT

Figure E-7
Key Observation Point 6

ANALYSIS AREA: MOHAVE COUNTY, ARIZONA	
Date: 02/12/2007	File: 2516\-KOP-6.MXD
Drawn By: EC	Layout: Figure E-7 PDF

Existing Condition

Looking southeast from the corner of Oatman Highway (Historic Route 66) and Quartzite Road about 3.5 miles from the northwest corner of the Project site. The Northern Arizona Energy Project and existing Griffith Energy Project are not visible from this location.

NORTHERN ARIZONA ENERGY PROJECT	
Figure E-8 *Key Observation Point 7*	
ANALYSIS AREA: MOHAVE COUNTY, ARIZONA	
Date: 02/12/2007	File: 2516\-KOP-7.MXD
Drawn By: EC	Layout: Figure E-8 PDF

Existing Condition

Located midway between Dawson Drive and Quartzite Road on Centennial Road about 2.4 miles from the northwest corner of the Project site. The view faces southeast, the existing Griffith Energy Project is small relative to the surrounding landscape, and is difficult to see for the casual observer. The Northern Arizona Energy Project is difficult to see next to the existing Griffith Energy Project because of the small scale of the facilities at the 2.4 mile distance.

NORTHERN ARIZONA ENERGY PROJECT

Figure E-9
Key Observation Point 8

ANALYSIS AREA: MOHAVE COUNTY, ARIZONA	
Date: 02/12/2007	File: 2516\-KOP-8.MXD
Drawn By: EC	Layout: Figure E-9 PDF

EXHIBIT F RECREATIONAL PURPOSES AND ASPECTS

As stated in Arizona Corporation Commission Rules of Practice and Procedure R14-3-219:

"State the extent, if any, the proposed site or route will be available to the public for recreational purposes, consistent with safety considerations and regulations, and attach any plans the applicant may have concerning the development of the recreational aspects of the proposed site or route."

RECREATIONAL PURPOSES AND ASPECTS

Neither the applicant nor jurisdictional agencies have proposed any plans for the development of recreational facilities associated with the Project. The construction, operation and maintenance of Project will be consistent with safety considerations and not open to public access.

There is currently no developed recreation near the Project area. No significant recreation occurs on or around the Project Site. Dispersed activities such as hunting and off-road vehicle (ORV) uses do occur on public lands in the general area.

EXHIBIT G CONCEPTS OF TYPICAL FACILITIES

As stated in Arizona Corporation Commission Rules of Practice and Procedure R14-3-219:

"Attach any artist's or architect's conception of the proposed plant or transmission line structures and switchyards which applicant believes may be informative to the committee."

Figure G-1 contains a rendering of the Northern Arizona Energy Project.

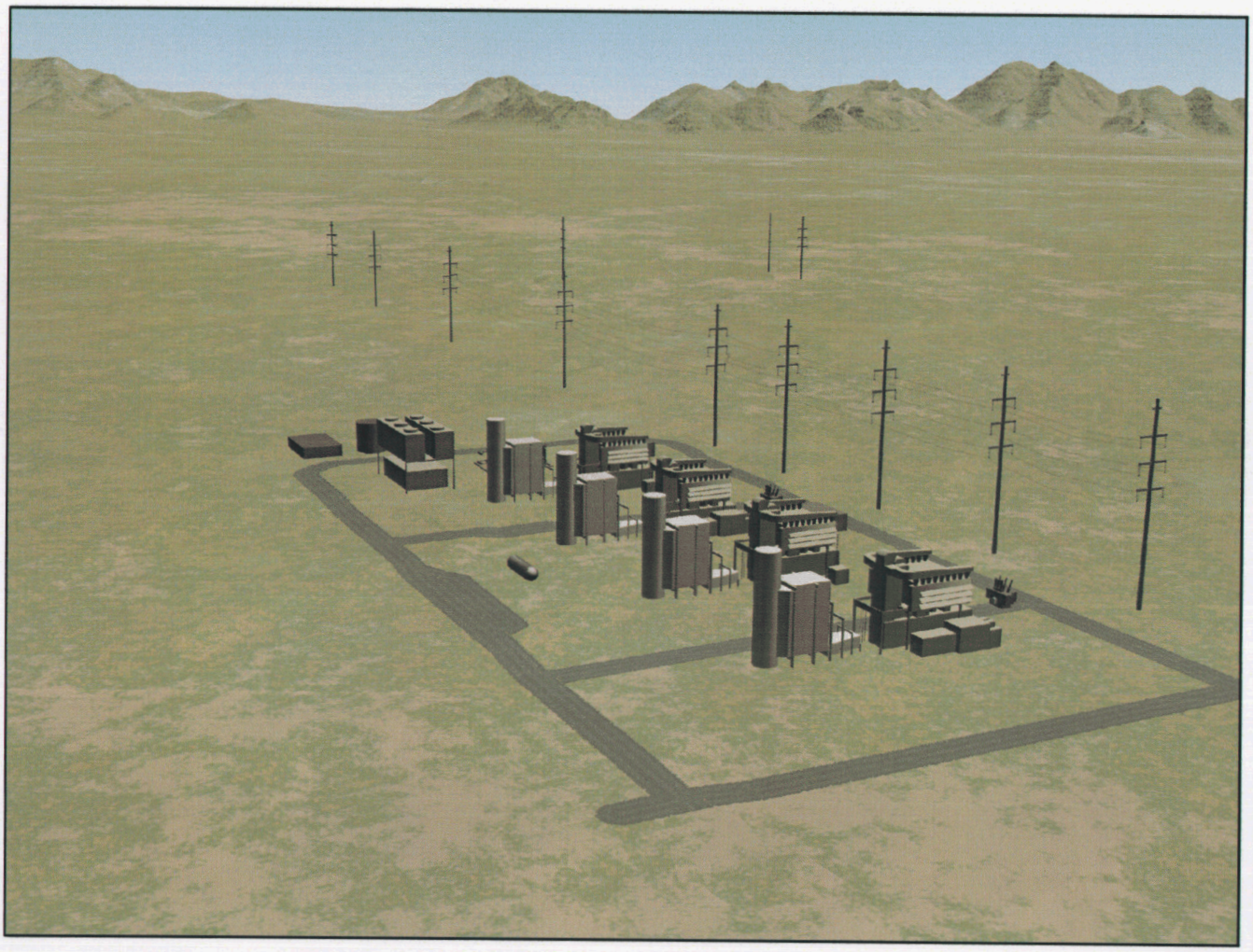

NORTHERN ARIZONA ENERGY PROJECT

Figure G-1
Artists Rendition of Power Plant

ANALYSIS AREA: MOHAVE COUNTY, ARIZONA	
Date: 02/15/2007	File: 2516/Rendering .MXD
Drawn By: EC	Layout: Figure G-1 PDF

EXHIBIT H EXISTING PLANS

As stated in Arizona Corporation Commission Rules of Practice and Procedure R14-3-219:

"To the extent applicant is able to determine, state the existing plans of the state, local government, and private entities for other developments at or in the vicinity of the proposed site or route."

Existing and planned land uses in the area are described in **Exhibit A. Figures A-1, A-2, and A-3** show the existing and future land uses within the Project study area. The planned land uses for the lands surrounding the I-40 Industrial Corridor include Rural Development, Suburban Development, and Urban Development Areas as shown on **Figure A-3**. Several areas near the Project Property have been platted for subdivision; however, there are currently no housing developments on the platted subdivisions in the vicinity of the Project Property as shown on **Figure A-2**.

The Project will be fully compatible with the County's Zoning Regulations and planned land uses for the I-40 Industrial Corridor and will comply with the industrial performance standards for the MX zone. No existing or planned developments of government or private entities at or near the Project Site were identified that will conflict with the Northern Arizona Energy Project.

AGENCY AND PUBLIC COORDINATION

The Applicant conducted a public outreach program to inform the public about the Project and to solicit input from the community. In addition, as part of the EA process, a public involvement program is being advanced by Western for this Project to provide information to federal, state, and local government agencies and private entities, to solicit information, to obtain comments, and to identify issues pertinent to this Project. A summary of the agency meetings, public meetings, and Native American consultations, public contact letters, public response comments and public notices, and a fact sheet are presented in **Exhibit J**.

Table H-1 identifies the individuals and entities that have been contacted to obtain their input on the Project.

Table H-1 Property Owners Within 5 Miles Of Project	
OWNER NAME	**PARCEL**
A/M GAS N GO INC 50	215-15-155A
ADAMS ROSEMARY	209-05-107
ALANIZ ANDREW D	209-27-013
ALLEN KELLY	215-15-090A
APACHE TRUST	215-02-113
APPLEBY JOHN ETAL JT	215-12-087E
APSK REALTY I	215-23-003
ARELLANO ARACELI E	215-12-166D
ARNOLD BRUCE JR & SARA T TRUSTEES	215-22-009
ARNOLD CLINT JASON	215-08-024E
ARNOLD RALPH & BARBARA JT	215-03-075
AVERETT SANDRA	209-07-214
AVERETT SANDRA	209-07-218A
AVILA DANIEL S & ELKE K JT	215-02-099
AWBF INC	215-03-012
BAIER GARY L CPWRS 50	215-02-053
BAKER DONNA L	209-02-031
BANUELOS GEORGE & MONICA CPWRS	209-04-022
BARNES MARIAM	209-05-007
BARNETT KEITH & MARJORIE TRUSTEES	215-11-056
BASSETT EARL L	209-04-173
BAYARD SHEILA M ETAL	215-03-109A
BEDOW SHIRLEY SURVIVING TRUSTEE	209-05-041
BEEZER TIM & CAROL JT	215-02-242
BEKOLAY CHARLOTTE S	209-07-127
BEKOLAY PAUL W	209-19-041
BENIGAR JAMES & TREVA JT	215-05-243
BENNETT GEOFF & MAUREEN	215-13-067B
BERNATZKE FREDRICK GEORGE	215-04-010
BEVIS JOHN & SHARON JT	215-15-088A
BIRDSELL RONALD & ROBERTA JT	209-13-055
BLACKSTOCK TWILA	209-03-053
BLAIR MICHAEL E & BARBARA A JT	209-03-129
BLAKE CORRIGAN & BLAKE INVESTMENTS LLC	209-03-224
BLANCO ANNA B	209-07-012
BOARDMAN ERWIN J & RUTH L TRUSTEES	215-02-185
BOCK THOMAS R	215-14-038
BOMARETO GEORGE	215-11-196
BONE RICHARD & GLENDA JT	209-12-055
BOROS JOHN & MARY JT	215-04-097
BOSZE ALEX JT 34	215-02-056
BOTTOMS BILL & AMANDA JT	215-15-058B
BOWERS WILLIAM	209-33-006
BOYLES JAMES & CYNTHIA JT	209-06-095B

Table H-1 Property Owners Within 5 Miles Of Project	
OWNER NAME	**PARCEL**
BREMERMAN WILLIAM & JOAN JT	215-03-066
BRESNAHAN CAROLYN	209-03-199
BREWER JESS D & DIXIE L JT	215-11-118
BRITTON ALAN D	209-09-143
BROWN KAREN L	215-23-011
BROWNELL DANIEL H & LUCILLE J CPWRS	209-04-086
BRUCE DAVID	215-14-086A
BRUCE DAVID R	215-14-087
BRUNELLE LEON F	215-04-035
BRYANT ROY D JR & LINDA D JT	209-20-038
BTP#1-05	215-06-023
BUCHANS JEANNE TRUSTEE	209-22-012A
BURCH JENNIFER BROWN	215-15-095D
BURCH STEVEN & KATHY CPWRS	215-15-097
CABAN ARMANDO J & GAYLYNN E JT	215-02-164
CALDWELL DANIEL E	209-02-197
CALVERT GENE T & MARJORIE Y JT	209-07-047
CAMERON JOHN & NANCY JT	209-07-178
CAMUS FRANK ETAL	215-11-038
CANO RAUL R	209-19-070
CAREY DAVID R	215-15-117A
CARLSON WENDY	209-02-065
CARLTON ROY & ELIZABETH JT	208-29-126B
CARRER DORIS	215-04-008E
CEJ LLC	215-07-017B
CHAMBERS JUSTIN	215-08-039A
CHANDLER LINDA R	209-06-069
CITY OF KINGMAN	215-01-017
CLARK COUNTY LAND DEVELOPMENT	215-07-103B
CLARK NANCY	215-15-073A
CLOOS THOMAS L ETAL JT	209-02-154
COBB VAN D & SONIA JT	215-22-007A
CONNORS TERRY IN TRUST FORO	215-15-069A
COOK ROY D & PEGGY J JT	209-05-013
COPPIE PAUL JT 50	215-06-068
CORRAL EULOGIO	209-06-175
CORRIGAN ROBERT	209-03-074
COX MICHAEL G & NICOLE LEANDA JT	209-07-096
COX WILLIAM GUY & BETTY	215-11-136
CRAIN ROY E & NISSA A	215-19-023
CRISCIONE LOUIE	215-06-246
CULLINANE THERESA L JT 50	215-11-202
CUMMISKEY LOIS TRUSTEE	209-14-001
CUNNINGHAM EUGENE TRUSTEE	215-14-197B
CURTIS WILLIAM AUGUST	209-26-016

Table H-1 Property Owners Within 5 Miles Of Project	
OWNER NAME	**PARCEL**
CYRUS JASON A	215-08-041C
DA LYNN CHERIE	209-17-008
DAMMERICH STEVE	209-05-077
DANKO RONALD G DBA	209-28-013
DAVENPORT LOIS	215-13-094A
DAY JEAN	215-11-272A
DE CHENNE DENNIS & JUDITH	209-14-005
DEAN JEFFREY M & CUIYAN LIU JT	215-11-155
DELGADO JOSE FRANCISCO	215-11-046
DESPAIN LINDA-MARIE	215-05-151
DILLOW MELISSA	215-11-171
DILLOW MELISSA R	215-11-212
DODANE MARGORIE L	215-07-119B
DONDANVILLE HAROLD	209-03-094
DONIHOO CAROL A	215-02-177
DOVE JAMES & KAREN JT	215-08-227B
DUNCAN PATRICIA A JT 50	215-11-200
DURON ANTHONY JR	208-29-002S
DURST SCOT A JT*	209-02-106
DWYER MICHAEL H ETAL	208-28-021
EDWARDS ED	209-05-002
ELDEAN JOHN D	215-19-028
EQUATORIAL MINERAL PARK INC	215-01-069
FALCONE DANIEL G	215-14-034
FATCO TR 5757	215-02-151
FATCO TR 5757	215-02-244
FERGUSON DOUGLAS & JEAN	215-02-004A
FERGUSON DOUGLAS H & JEAN E JT	215-02-004B
FERNANDEZ SALVADOR S	215-14-209
FILLET RONALD C & JEANIE J JT	209-25-004
FLYING R INVESTMENTS	209-07-263
FRESCHAUF ROBERT J SR	215-13-025B
GARNER WILLIAM	215-11-246
GEOFFRION EDWARD J	215-04-062
GIBSON HARVEY S	215-06-233
GIGLIO BONNIE	215-15-199A
GILBERT HENRY	215-07-119A
GIST AUBRAY J	209-05-072
GIST JOHN	209-05-030
GLOTKOWSKI JEWEL	215-11-019
GLOTKOWSKI ROD ETAL JT	209-13-031
GLUSCHENKO SHARON TRUSTEE	209-04-129
GOLDBERG WILLIAM & TINA JT	209-28-009C
GOLDEN VALLEY FIRE DEPARTMENT	215-04-061
GOSS EUGENE R & GAIL E JT	209-13-043

Table H-1 Property Owners Within 5 Miles Of Project	
OWNER NAME	**PARCEL**
GRANT GREGORY A	215-05-081
GRAYBEHL WILLIAM TRUSTEE	215-05-064
GRIESINGER GERHARD & SHERYL JT	215-05-248
GROTZ ROY J 50	209-05-067
GUSMAN FRANK J SR & DOLORES TRUSTEES	215-11-250
HALL JOHN G & MONICA F JT	209-11-035
HALVORSON ROBERT	215-02-069
HAMMOND GEORGE M & PEGGY L CPWRS	209-13-054
HAMMOND MAUREEN	215-07-114B
HARPER HAROLD & BETTY J	209-07-218B
HARRISON DONALD	215-11-263
HARRISON DONALD JAMES	215-11-274
HARRISON WILLIAM M JR	215-11-264
HART PAUL EUGENE JT 50	209-05-004
HECKER JAMES J	215-11-050
HEYTMAN DAVID A & HAZELDELL TRUSTEES	215-14-039
HIGLEY STEPHEN & JOANN	215-12-247B
HILLENBRAND LAURENCE & MARY A	215-14-279
HINDT MAX & ARLENE 34	215-14-259
HIRSCHFELD JEANNIE ETAL JT	215-15-172B
HOEFT CHRISTE E	215-13-068B
HOFFMAN ANDREW JT 50	215-03-009
HOFFMEIR RICHARD H	209-07-034
HOFSTADTER MICHAEL & CANDACE CPWRS	215-05-150A
HOGSTEN RICHARD & SHARON JT	215-04-119
HOLLAND JON D & SUSAN E JT	209-07-292
HOLYOAK TRAVIS L	209-07-049
HOUSKA GERALD & TERESA CPWRS	215-04-017
HOWARD FRED & TAKAKO CPWRS	209-23-012A
HOWETH MICHAEL & GEORGIA C JT	215-14-065
HUDDLESTON TIMOTHY	215-15-146B
HUFFINE GARY & PATSY JT	209-07-171
HUGHES DENZIL L & ANNE M JT	209-09-163
HUSBANDS BRIAN	208-29-153
HUTCHINSON LARRY SR	215-11-138
ILES STEVEN T & KAY L CPWRS	209-11-086
IOZZO JOHN & MARY JT	215-02-076
JACKSON BRIAN E 50	209-01-013
JACKSON JANET ANN	209-19-105
JACKSON LAURA MARIE	215-11-245B
JACOBS KARL & BARBY CPWRS	215-11-115A
JAEGER DENNIS F	209-09-165
JAMES CALVIN LLC	215-02-137
JOHNSON ERIN L	215-13-168A
JOHNSON MICHAEL J ETAL JT 50	215-10-004

Table H-1 Property Owners Within 5 Miles Of Project	
OWNER NAME	**PARCEL**
JOHNSTON TIMOTHY & TARA JT	215-05-162
JOLICOEUR DENNIS & RENEE CPWRS	215-11-272B
JONES LUTHER B & EVA M JT	215-07-251B
JORDAN DESERT LAND LLC	209-07-063
JOSEPH JUSTIN LAURENT	209-03-192
JUAREZ LEO & LOIS CPWRS	215-03-080
KALTZ KENNETH & THERESA CPWRS	215-15-023A
KAMPETER RONALD L	215-08-027C
KANELOS JAMES	215-11-190
KEITH CHARMAYNE	215-08-238A
KEITH CHARMAYNE JT 50	215-08-197D
KEITH CHARMAYNE M	215-07-240B
KEMP EARL	215-12-114A
KEMP EARL TERRY	215-11-127
KERR GARRET	215-14-011
KIMBROUGH KENNETH	215-11-059
KING JAY E ETAL JT	215-14-222A
KING SHEILA JT 50	215-05-240
KINGMAN PRESBYTERIAN CHURCH	209-03-238
KINGMAN UNIFIED SCHOOL DISTRICT #20	215-05-008
KINGSLAND GLADYS E TRUSTEE	209-25-002
KLIMENT BEULAH K	215-14-118A
KREUGER EDWIN	215-14-223B
KUNZE EDWARD A ETAL JT	209-26-015
LACOSS HARRISON A	209-11-247
LEASK DAVID	215-15-028A
LEE IRA M & MARGUERITE V TRUSTEES	215-02-039
LEE MARGUERITE V TRUSTEE	215-02-142
LEONARD OWEN JR	215-03-072
LIBY GERALD V	209-20-019
LIGHTWINE DORIS TRUSTEE	209-07-155
LO SIU WO	215-06-082
LONG GARY G	215-13-093B
LONG GLEN R 50	209-21-017
LONG WILLIAM D & WILMA M*	209-05-076
LOWE LINDA D	215-23-015
LOWREY JACQUELYNN MARY JT 50	209-19-086
M & M 2000 LLC	209-06-201
M DE TORO	215-04-146
MABERRY JAMES A	209-05-045
MAC NEIL CHUCK P	215-02-016A
MANSFIELD RORY & SANDRA JT	215-06-204
MARTIN BOBBY E & SHIRLEY J	215-11-273
MARTIN CHRISTOPHER B JT 50	215-15-049B
MASON WILLIAM & MARYANN CPWRS	215-08-240A

Table H-1 Property Owners Within 5 Miles Of Project	
OWNER NAME	**PARCEL**
MC BRAYER ERVIN L TRUSTEE EST OF	209-05-039
MC CAFFERTY JASON H	215-02-012
MC CLELLAN ANGELA S	215-02-006
MC COY BRAD L	215-12-165A
MC DANIEL RON & MARTI JT	215-12-090B
MC ELVAIN ELDON & JULIE CPWRS	215-04-099
MC KELLAR ROBERT A & JEANETTE TRUSTEES	215-06-086
MCLEAN JAMES E & DELIA F CPWRS	209-19-017
MCNAB FRANCIS JAMES & KAREN M JT	215-04-005
MILLER ALVIN & JUDY JT	209-11-139A
MILLER CAROL L	209-03-002
MITCHELL LARRY JT 50	215-14-199
MITCHEM SAM M	215-12-247A
MITTELSTAEDT MANUELA B JT 50	215-14-015
MJB INVESTMENT GROUP LLC	206-23-017
MOHAVE COUNTY	215-08-122B
MOHAVE COUNTY ECONOMIC DEV	215-09-020C
MONGELLI JOSEPH A 25 ETAL	209-03-188
MONTGOMERY MICHAEL & ROSA JT	209-04-083
MOORE JESSE R JT 50	209-11-111
MOORE ROBERT M	215-05-016
MULKEY FRED & ANN E	215-15-035B
NAVARRO RODOLFO & CASSANDRA JT 50	215-18-007A
NELSON DONALD L	209-18-003
NEWMAN JOHN & MARGARET JT	215-11-188
NORDBY JAMES ETAL JT	215-07-106B
NORRIS JAMIE T	215-06-222
NORRIS JOHN C	209-03-213
NORRIS PEGGY A TRUSTEE	215-11-245A
NORTH COAST VILLAGE LLC	209-02-193
NOVOSEL CAROL*	215-14-157F
NUTT TIMOTHY W & CHRISTIANNE R TR 34	206-23-016
ODLE ROBERT L & SHARON JT	215-04-164B
ORMEN LAUNITA JT 50	209-05-053
OSBORN JEANETTE W TRUSTEE	215-02-193
O'SULLIVAN RUTH	209-17-011
OTT JOE & CAROL CPWRS	215-23-013
OVERSON GARY & LINDA TRUSTEES	206-03-031
PARKER CHARLES &	209-07-225
PARR ELMER D & MURIEL TRUSTEES	215-09-007B
PATTERSON ROY & MARY JT	209-04-110
PAUL SHIRLEY J	215-15-037A
PAULSTEINER FRANK R & MARIA A CPWRS	215-05-161
PEDI MARTIN S	209-05-036
PENTLAND MAE S JT 50	209-07-051

Table H-1 Property Owners Within 5 Miles Of Project	
OWNER NAME	**PARCEL**
PETITT ROBERT & LINDA ETAL JT	209-26-009
PETRIGALA MICHAEL	209-20-045
PHANTOM FARMS TRUST	215-02-060
PIERCE KEN	215-12-214A
PIERCE KEN R	215-11-206
PIGSLEY PATRICIA	209-03-012
PITT ANNETTE L	215-13-096E
POLI-GOLD LLC	209-01-122
POOL JOHN J & HEIDI JT	215-02-059
POOTS KELLY & CAROLYNN JT*	209-03-088
PRATT JULIUS J & DOROTHY L JT 50	215-04-167
QUADE RONALD & BILLIE D	209-08-002
QUEZADA FIDEL C & THEODORA JT	215-02-219
RANCHO MOHAVE PROPERTIES	215-07-012B
RANDKLEV WARREN & BONNIE JT	215-02-080
RANDKLEV WARREN D & BONNIE L JT	215-02-079A
REIDY KIMBERLY	215-02-024
REILLY MICHAEL W	215-15-243A
REINKE KURT R	209-25-016
RF PROPERTIES	215-25-006
RHODES HOMES ARIZONA LLC	215-17-006
RHOTEN DAVID R	215-11-061
RICE RELMOND & JOANNE CPWRS	209-05-038
RICHARD WILLIAM F & HULDAH	209-03-087
RICHTER VICTOR J	209-04-059
RIEDEL REX	215-11-166
RIEDEL REX B 50	215-11-150
RJJR 2005 LLC	208-29-058
ROBERTSON JOSH JT 50	208-29-093
ROBINSON DAVID & DEBORAH D CPWRS	215-11-123
RODRIGUEZ STEVE ADOLFO	215-15-222E
ROE JAMES & KANDY TRUSTEES	209-08-009
ROMER CHARLES JOHN TRUSTEE	206-03-036
ROSSO DOMINIC A ETAL TRUSTEE	209-11-044
ROWLAND MILLIE S TRUSTEE	215-22-002
RUNYAN JACK E & NAVIS L	209-02-177
RUSSO JAMES & DARLEEN JT	215-25-001A
RYAN SHIRLEY MAE TRUSTEE	208-29-044
SABACH MARGARET M	215-13-037A
SABLE JOHN	215-07-196B
SABRA JAMAL A JT 50	215-06-108
SAMPSON JOHN E & MIKKI CPWRS	215-10-015A
SANCHEZ MARIO	215-02-089
SANDOVAL KAREN S	215-11-252
SCHAFFER BART R 50	215-02-192

Table H-1 Property Owners Within 5 Miles Of Project	
OWNER NAME	**PARCEL**
SCHERZER SUSAN E	215-14-221D
SCHULTE ERIC	215-06-205
SCHWAB VERNA A	215-15-151A
SCULLY JOHN H & ELEANOR JT	215-03-244
SHANE GERALD G TRUSTEE	215-06-121
SHANE GERLAD G TRUSTEE	209-06-114
SHARP TRACY	215-02-008
SHAW HENRY C	215-11-124
SHIPLEY HERB TRUSTEE	209-09-034
SHORT/BOWERS INVESTMENTS LLC	209-33-012
SIDELL JOE & JAY JT	209-05-088
SIEKER DOUGLAS & DANA JT	209-09-239
SILVAS VALERIE	209-19-055
SMALLER JAMES & MARGIE JT	215-13-040A
SMITH ALLEN & LILLIAN C TRUSTEES	209-02-052
SMITH LILLIAN E	209-04-123
SMITH PERRY E & FRANCES E	215-13-218B
SMITH RODERIC M & SYBILLE H TRUSTEES	215-14-182
SMITH STUART & MARY ANN JT	209-02-044
SMITH WILLIE E	209-03-013
SOLBES JOHN P & SHERYL A JT	215-02-019
SOLE RANDALL & SHARI*	215-15-003E
SOMERS EDWARD T & LOIS A	215-05-023
SORENSEN PEER & ELEANOR JT	209-06-157
SPARGO DAVID M	215-02-115
SPECIALTY SALES OF MISSISSIPPI	215-25-004B
SPILLERS JAMES & CAROL	209-06-018
SPRINGBORN PAUL W	215-04-056
STALLINGS JOHN C & NANCY K	209-07-060
STARR ORGANIZATION	215-14-122
STATON LUTHER	208-29-064
STEEN JUSTIN R	215-08-063C
STEINKE WOLFGANG W	209-20-036
STEVENSON VIRGINIA I	215-02-014
STODDARD LOREN JEFFREY	209-05-109
STONE MICHAEL A & ELIZABETH C JT	209-04-008
STRONG MARK D	215-02-236
SUMMITT WILLIAM & CHRISTINE TRUSTEES	209-02-016
SUTTLES EDWARD & EFFIE JT 50	215-02-103B
TANNER RUBIN	209-06-229
TAYLOR KEITH SR CPWRS 50	215-21-001C
TERPENING CINDY	215-04-012
THOLKE DAWN C ETAL JT	215-02-061
THOMPSON KENNETH E & LYNDA M TRUSTEES	215-13-029B
TOBAR YOLANDA	215-02-052

Table H-1 Property Owners Within 5 Miles Of Project	
OWNER NAME	**PARCEL**
TOOLEY DAN E & JANICE G	215-04-094
TORRES-HUERTA VICTORIA	209-02-067
TRESTEN MARIA	215-11-262
TRI STATE LASER BRITE LLC	209-13-023
TRI-STATE UNDERWRITERS INC	215-11-223
TRUSSELL THOMAS J & MARGUERITE	215-11-115B
TUCKER MORTON W & LORRAINE J TRUSTEES	215-14-026
TYLER GERALD & KATHRYN	215-02-119
UNITED STATES OF AMERICA	209-01-019
UNITED WAY OF LAKE HAVASU	209-11-026
US FINANCIAL PROPERTIES LLC	215-07-098C
VAN HORN RICHARD A & GRACE JT	215-07-255
VGI LLC	215-13-124A
W A W INVESTMENTS TRUST	209-06-034
WALL STANLEY	209-17-001
WALL STANLEY H	209-08-014
WALLACE STANLEY ROBERT	215-05-235
WALNUT CREEK WATER CO INC	215-19-024
WARNER TERENCE	215-14-224
WARREN LISA	215-05-216
WATSON MICHAEL & DOLORES JT	215-14-157G
WEIGEL RICHARD C	215-14-198
WELCH DAVID R	215-12-006A
WESTPHAL STEPHEN	215-03-015A
WHITE ELIZABETH J TRUSTEE	209-13-033
WIGGINS JOHN	209-11-101
WILDE TROY & GRETCHEN CPWRS	215-02-182
WILEY FINANCES COMPANY LLC	215-04-122
WILKS MATTHEW CALEB	215-04-001
WILLIAMS AUDREY	215-05-149
WILLIAMS FRED & GLORIA P TRUSTEES	209-17-010
WILLIAMS SHAWN & RAINA CPWRS	215-08-244B
WILLIS LLOYD A & MARGARET T JT	215-11-222
WILSON ALEX E & CYNTHIA A CPWRS 50	215-06-057
WILSON CEDRIC	215-02-025
WIYSEL GARRISON & AMY JT	209-07-179
YARBROUGH SAM & LINDA TRUSTEES	215-22-001
YARNELL WILLIAM E & DOROTHY L JT	215-18-007B
YOUNG CATHLENE L	209-03-089
ZILFI JOSEPH	209-33-027
ZIMMERMAN JEFF L	209-33-015

Federal Agencies

U.S. Fish & Wildlife Service, Ecological Services
Department of the Army, Corps of Engineers
Field Director, Intermountain Area, National Park Service
Bureau of Indian Affairs
Advisory Council on Historic Preservation
Superintendent, Glen Canyon National Recreation Area
Robert Arnberger, Superintendent, Grand Canyon National Park
Carlos R. Renteria, Community Planning and Development, U.S. Department of Housing and Urban Development
Julia Anna Cirillo, Federal Highway Administration, Region 9, U.S. Department of Transportation
Karl Kanbergs, Region 9, U.S. Environmental Protection Agency
Ginger Vagenas, U.S. Environmental Protection Agency
Tom Stehly, U.S.D.A. Soil Conservation Service

Native American Tribes
Daniel Eddy Jr., Chairman, Colorado River Indian Tribes
Patricia Madueno, Chairman, Fort Mojave Tribal Council
Stan Rice Jr., President, Yavapai-Prescott Indian Comm.
Levi Esquerra, Chairman, Chemehuevi Indian Tribe
Earl Havatone, Chairman, Hualapai Tribal Council
Grant Holyoak, Zuni Trust
Mr. Ernest Crooke, Tribal Chairman, Havasupai Tribal Council
The Hopi Tribe
Navajo Nation Historic Preservation Office

State Entities
The Honorable Jane Dee Hull, Governor of Arizona
Maria Baier, Policy Advisor, Office of the Governor
Arizona Dept. of Game & Fish, Region III
Nancy Gilbertson, Manager, Bill Williams Wildlife Refuge
William Dowdle, AZ State Land Dept., Environmental Resources
Arizona Department of Environmental Quality, Air Quality Planning Section
Prabhat Bhargava, P.E., Air Quality Division, Arizona Department of Environmental Quality
Arizona State Parks Department
Dee Goodwin, ADOT
Leroy Brady, ADOT, Roadside Development
State Historic Preservation Officer
Jim Garrison, Arizona State Historic Preservation Officer, Arizona State Parks
Steven M. Olea, Chief, Engineering, Utilities Division

City and County Entities
Comm. Dev. Dir., City of Kingman
Mohave County Board of Supervisors
Mohave Co. Planning & Zoning
Mohave Co. Public Works

Sandy Duke, Public Land Use Comm., Mohave Co. Board of Supervisors
Kingman Public Library
Bullhead City Public Library
LaPaz Co. Board of Supervisors
Rob Gumbles, Cooperative Extension Service
Jim Wilkinson, Kingman Airport Authority
Beverly Liles, Kingman Area Chamber of Commerce
Ron Walker, Mohave County Manager
Pat Forrest, City of Lake Havasu City
Mohave Co. Parks Department

EXHIBIT I ANTICIPATED NOISE/INTERFERENCE WITH COMMUNICATION SIGNALS

As stated in Arizona Corporation Commission Rules of Practice and Procedure R14-3-219:

"Describe the anticipated noise emission levels and any interference with communication signals which will emanate from the proposed facilities."

INTRODUCTION

The Project will generate noise; however, no interference with communication signals is anticipated.

Discussions of ambient sound levels do not focus on pure tones. Commonly heard sounds have complex frequency and pressure characteristics. Correction factors for adjusting actual sound pressure levels to correspond with human hearing have been determined experimentally. For measuring sound levels in ordinary environments, A-weighted (dBA) correction factors are employed. The A-weighted scale is used in most sound level (noise) ordinances and standards.

The level of a sound from a source is measured using a Sound Level Meter (SLM) that includes an electrical filter corresponding to the A-weighted curve. The filter de-emphasizes the very low and very high frequencies of sound in a manner similar to the response of the human ear. The SLM performs calculations to determine the average sound level that is recorded at intervals (i.e. 1-minute) in the SLM's memory.

Environmental sound levels are generally described and evaluated in the following ways:

- The equivalent sound pressure level (Leq) is defined as the average sound level, on an energy basis, for a stated period of time (e.g. hourly) at a given location.
- The Ldn is the day/night sound level that was adopted by the Environmental Protection Agency (EPA) as a measure of community sound level exposure (Crocker 1982). EPA defines Ldn as the average A-weighted sound level for a 24-hour period. Nighttime sound levels (10:00 PM. to 7:00 AM.) are increased by a 10 dB weighting factor, to account for the public's sensitivity to nighttime sound levels when most people are sleeping. The daytime (7:00 AM to 10:00 PM) energy average sound level is added to a weighted (+10 dB) mean nighttime level. The Ldn meets the EPA requirements for a description of cumulative sound level exposure, in particular the requirement that it be easily measured with simple, relatively inexpensive equipment.
- The EPA has established sound levels that are identified as protective of public health and welfare. EPA identified Ldn of 55 dB for residential areas as an outdoor sound level above which the public health and welfare will be affected (EPA 1974).
- Typical day-night sound levels in urban areas range from 68 to 90 dB; suburban areas average 50 dB; and rural range from 40 dB to 50 dB depending on the type of rural area. **Table I-1** lists the day-night average sound level of various sources as defined by EPA.

Table I-1 Examples of Outdoor Day-Night Average Sound Levels in dB Measured at Various Locations	
Source	**L_{dn} Sound Level (dB)**
Apartment next to a freeway	87.5
Urban high density apartment	78
Urban row housing on major avenue	68
Wooded residential	51
Agricultural crop land	44
Rural residential	39
Wilderness ambient	35

Source: EPA 1974

EXISTING SOUND LEVELS

The ambient noise in the vicinity of the Project Site is dominated by the traffic noise from I-40 and trains on the BNSF Railroad Line. In addition, the ambient conditions also include the Griffith Energy Project (Griffith).

The nearest noise receptor (residence) to the Project will be approximately 2.5 miles to the northwest in a semi-rural area. Rural areas of this type often have background levels from 40 to 50 dBA.

Vehicle traffic

In the noise analysis included in the Griffith CEC application (Docket # L-00000H-98-0090, Decision # 61295}, the average noise level from the traffic on I-40 was calculated using the Federal Highway Administration STAMINA Traffic Noise Prediction Model, version 2.0, and average daily traffic (ADT) in the Project area for 1996. A review of recent ADT values for 2005 show that there has been little change in the local traffic volume, therefore these estimates are still valid.

The STAMINA model was run using these traffic parameters and an average speed of 70 mph. The calculated noise levels at various distances from the Interstate are shown on **Table I-2**. The noise from the Interstate traffic was also calculated at a residence that is closest to Griffith.

Table I-2 Noise Levels from I-40 Traffic	
Location	**Noise (dBA)**
400 feet from I-40	62
1000 feet from I-40	57
2000 feet from I-40	52
Griffith proposed west property line (Apache Road)	57
Residence 2.5 miles northwest of Griffith	20

Trains

The precise noise levels from trains is a complex calculation that considers the train speed, the train length, the conditions of the wheels, and the condition of the track (Harris 1991). Noise from trains has been measured (Harris 1991) to range from 87 to 96 dBA at 100 feet from a track. To estimate the noise from trains on the BNSF Railroad Line, a noise level of 92 dBA at 100 feet from the track was used. The noise level from a train, a line source of noise, can be estimated using the following relationship:

$L_2 = L_1 - 10 * LOG (R_2/R_1.)$

Where: L_2 is the noise (dBA) at a distance R_2 from the source
L_1 is the noise measured at a distance R_1 from the source.

Applying the preceding equation and using a train source noise of 92 dBA measured at 100 feet from the track yields the following noise levels shown on **Table I-3** at the locations and distances from the BNSF Railroad Line in the vicinity of the proposed Project.

Table I-3 Noise Levels from trains on the Burlington Northern Santa Fe Railroad Line

Location	Distance from Track (feet)	Noise (dBA)
I-40	2,400	78
Griffith east property line	5,000	75
Griffith west property line (Apache Road)	5,800	74
400 feet west of Griffith west property line	6,400	74
Residence 2.5 miles northwest of Griffith	15,000	60

Transmission Lines and Interconnections
The electrical effects of transmission lines are those associated with electric field, magnetic field and corona. Electric and magnetic fields result in induced voltage on objects near the transmission line. Corona effects are manifested in audible noise, radio interference, and television interference. Noise and interference from the existing transmission lines in the area is not noticeable or is mostly minimal where residential and commercial development has occurred adjacent to the existing transmission lines. No new transmission lines will be constructed off the Project Property.

Griffith Energy Project
A typical gas-fired power plant has a characteristic noise level of under 75 dBA at 400 feet from the buildings. This noise level varies somewhat depending on which side of the power plant the receptor is located. A receptor in a direct line from a switch yard or cooling towers will experience somewhat higher noise levels at 400 feet than on the other sides of the plant.

PROPOSED PROJECT

Construction
Noise generated during the construction phase would result from the operation of construction equipment and vehicles. **Table I-4** presents typical noise levels for construction equipment at a distance of 15 meters (45 feet) (Crocker 1982). These values assume the equipment is operating at full power.

Table I-4 Typical Construction Noise Levels	
Equipment Category	**Noise Level at 45 ft (dBA)**
Dump Truck	88
Portable Rock Drill	88
Concrete Mixer Truck	85
Pneumatic tool	85
Grader	85
Front-End Loader	84
Mobile Crane	83
Excavator	82
Backhoe	81
Dozer	78
Generator	78

The typical noise 45 feet from a construction site would be 85 dBA because the construction equipment can be spread throughout a construction site and may not be operating concurrently. This value and the data presented above indicate that there will be a temporary increase in ambient noise that will be limited to the construction phase of the project. The propagation of noise depends on many factors including atmospheric conditions, ground cover, and the present of any natural or man-made barriers. As a general rule, noise decreases by approximately 6 dBA with every doubling of the distance from the source (Bell 1982). Therefore, noise levels at various distances from the construction site can be predicted and are shown in **Table I-5**.

Table I-5 Predicted Noise Near Construction Activities	
Distance from construction site (feet)	**Predicted Noise Level (dBA)**
45	85
90	79
180	73
360	67
720	61
1440	55

Construction noise generated by the Project would be intermittent in nature and would be temporary as the construction period is estimated to be nine (9) to twelve (12) months. Up to six (6) months of the construction period will involve performance testing of the Project equipment. During this start-up and testing period, noise levels will be consistent with noise levels during operation.

The nearest noise receptor (residence) to the Project is approximately 2.5 miles to the northwest. At this distance, the construction noise from the plant will be significantly less than discussed above and probably near the background levels that range from 45 to 50 dBA. The actual noise level at distance will vary with wind direction and velocity.

It is expected that most construction would occur during daylight hours. Some deliveries and continuous construction activities such as foundation pours or peak construction work forces will be required during non-daylight hours. During start-up and testing, performance testing will also require some continuous work but, as stated above, the noise profile associated with these activities will be consistent with operational levels. Impacts to noise are expected to be minor and short in duration.

Operations

The primary noise sources anticipated with the Project during operation include the CTG inlet, the CTG compartments, the exhaust ductwork, the stack, gas compressors, and the chiller module. Secondary noise sources are anticipated to include the GSU transformers and miscellaneous pumps, fans, and compressors. The CTGs are housed in a metal enclosure to protect the units from the elements and for noise reduction. All equipment sound levels were estimated based on available data from the equipment manufacturers. As described in Section 4.3.4 (Operations and Emissions-Noise Profile), equipment purchased for the Project will be specified for equivalent "A" weighted sound power levels not to exceed 85 dBA. Should the purchased equipment have sound levels that exceed OSHA permissible noise limits (CFR 29, 1910.95) administrative or engineering controls will be utilized, such as personal protective equipment. These sound levels are applicable to all operating modes.

Table I-6 shows the noise levels expected to be generated from operation of the Project. Noise propagating to the east, south and north toward and parallel to I-40 will generally be masked by I-40 traffic and the occasional train passing by east of the Interstate. Noise propagating toward the west will be at levels slightly above the background noise of the Interstate and train noise. The noise at the closest residence, 2.5 miles to the northwest of the Project, will be dominated by the noise produced from the existing Griffith facility.

Table I-6 Noise Levels Expected From Operation of the Project vs. Noise Levels from I-40

Location	Noise (dBA)			
	Northern Arizona Project		Existing Griffith Generation	Interstate 40 Traffic
	L_{eq}	L_{dn}		
400 Feet from Source	49	56	75	62
1,000 Feet from Source	41	48	67	57
2,000 Feet from Source	34	41	61	52
1 Mile from Source	26	32	53	41
2 Miles from Source	20	26	47	30
2.5 Miles from Source (nearest residence)	18	24	45	20

Note: I-40 radiates noise as a line source while the Project will radiate noise as a point source. Therefore, road noise diminishes less with distance.

At the northern boundary of the Project Property (along Haul Road) the Project will have an estimated L_{eq} of 55 dBA and an L_{dn} of 62 dBA. Apache Road is approximately 600 feet to the west of the Project Site and 1,000 feet west of the Griffith sources. Although the Northern Arizona Project is closer to this location (western boundary at Apache Road), it is estimated to have a lower impact at this location than the existing Griffith Project given the dominant noise profile of the Griffith Project (Table I-6).

CONCLUSIONS

The Project is expected to have operational sound levels that are below existing background sound levels. Sound levels from construction may be elevated above existing background levels but are temporary and, therefore, impacts are limited.

EXHIBIT J SPECIAL FACTORS

As stated in Arizona Corporation Commission Rules of Practice and Procedure R14-3-219:

"Describe any special factors not previously covered herein, which applicant believes to be relevant to an informed decision on its application."

PUBLIC INVOLVEMENT IN THE ENVIRONMENTAL STUDY AND SITING PROCESS

The public involvement program for the Project includes contacts with individuals and Federal, State, and local agencies by mail, public notices, the mailing of fact sheets, and agency and public meetings. **Exhibit H** lists all contacts to whom mailings were sent. Contact letters, public response comments, meeting and public notices, and the fact sheet are provided in **Exhibits J-1, J-2, J-3, and J-4**, respectively. **Exhibit J-5** summarizes the issues that have been raised relative to the Project as of the Application filing date.

This Project was originally referred to as the Arroyo Energy Project (Project). It is now known as the Northern Arizona Energy Project (Project or NAEP). This Project was presented to agencies and the public in applicant-sponsored forums as the Arroyo Energy Project prior to the name change. The project description has not changed since the initiation of public communication regarding the Project. .

AGENCY and PUBLIC MEETINGS

The following meetings were held for agency personnel and for the public to discuss and collect comments on the potential power plant EA:

- An informational open-house meeting for the public, hosted by the Applicant, was held on February 5, 2007 in Golden Valley from 4:00pm to 7:00pm. This open house meeting was advertised in local papers and four hundred (400) direct mailing announcements were sent to all property owners within five (5) miles of the Project Site.
- A Project Forum was held in Lake Havasu, Arizona on February 5, 2007 from 12:00pm to 2:00pm with key community leaders and elected officials.
- Public scoping for the EA developed by Western included the mailing of a scoping letter to interested parties and announcements in the local paper.

EXHIBIT J-1 PUBLIC CONTACT LETTERS

You're invited to a public open house

Monday, February 5, 4:00-7:00pm
Black Mountain Elementary School - Gymnasium
3404 N. Santa Maria Road, Golden Valley, 928-565-9111

Come learn about a unique power plant proposed to help meet the region's energy needs. Residents may arrive anytime between 4:00pm and 7:00pm. The format is informal, emphasizing one-on-one exchanges of information so individuals can learn about the Project.

Arroyo Energy

Project Update – February 2007

LS Power proposes to build a clean, natural gas-fired power plant to address the growing energy needs of Mohave County and the rest of Arizona.

The proposed project will be comprised of four (4) combustion turbine generators designed to meet summer peak demand. The electric production capability of all four (4) units is 175 MW and is the project site is located just north of the existing Griffith Energy project (600 MW).

The Arroyo Energy project will efficiently use the existing I-40 Industrial Corridor infrastructure for gas, electricity and water.

In addition, the new power generation project will use the water recycling facilities of the Griffith Energy project to minimize water use.

During the development process, the community will have many opportunities to learn about the proposed project and participate in the review process conducted by the Arizona Corporation Commission, its Siting Committee and other agencies – including the Arizona Department of Environmental Quality and the Western Area Power Administration – as they consider granting permits for the construction and operation of Arroyo Energy.

Project Location

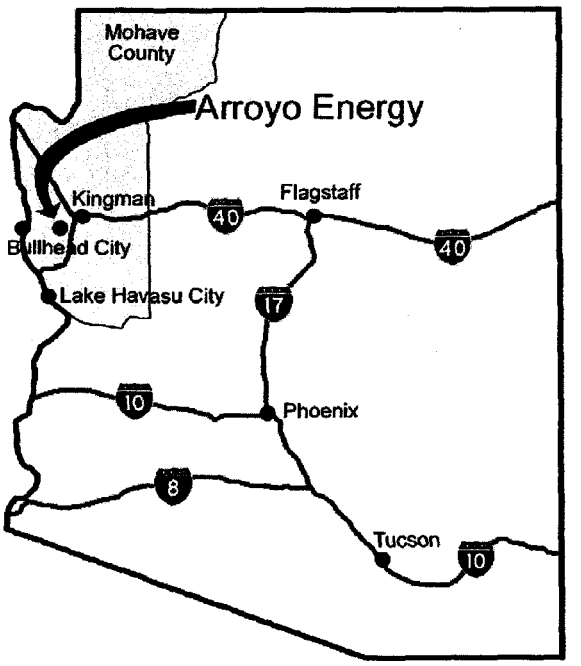

Arroyo Energy is located southwest of Kingman, Arizona off of I-40 in the Industrial Corridor.

For more information about the Arroyo Energy project, contact David Hicks, Public Affairs, LS Power Generation, 619-498-5389, dhicks@lspower.com.

Arroyo Energy
3033 N. Central Ave., Suite 900
Phoenix, AZ 85012

Postage

«OWNER_NAME1» «OWNER_NAME2»
«CARE_OF»
«ADDRESS»
«CITY», «ST» «ZIP»

You're invited to a public open house
Monday, February 5, 4:00pm-7:00pm
Black Mountain Elementary School
Golden Valley, AZ

Arroyo Energy

Project Facts:

- Helps meet growing demand for peaking power (energy delivered within 10 minutes of request);
- Responds to regional energy needs, growing by 25 megawatts per year in Mohave County alone;
- Brings incremental $150 million investment to Mohave County and contributes to development of the I-40 Industrial Corridor;
- Generates local revenue to support schools, police, fire, libraries and the Mohave County general fund;
- Utilizes existing infrastructure, including water allotments;
- Minimizes emissions by using clean natural gas and modern control systems;
- Requires no additional off-site right of way, roadways, transmission lines or pipelines.

EXHIBIT J-2 PUBLIC RESPONSE LETTERS

EXHIBIT J-3 MEETING AND PUBLIC NOTICES

ANNOUNCEMENT

You're invited to a

Public Open House

for

Arroyo Energy

Monday, February 5, 4:00-7:00pm
Black Mountain Elementary School - Gymnasium
3404 N. Santa Maria Road, Golden Valley

Come learn about a small power plant proposed for the I-40 Industrial Corridor to help meet the region's energy needs at times of peak demand. Residents may arrive anytime between 4:00pm and 7:00pm. The format is informal, emphasizing one-on-one exchanges of information so individuals can learn about the project.

For more information about the Arroyo Energy project, contact David Hicks, Public Affairs,LS Power Generation, 619-498-5389, dhicks@lspower.com.

ANNOUNCEMENT

You're invited to a

Public Open House

for

Arroyo Energy

Monday, February 5, 4:00-7:00pm
Black Mountain Elementary School
(Gymnasium)
3404 N. Santa Maria Road
Golden Valley

Come learn about a small power plant proposed for the I-40 Industrial Corridor to help meet the region's energy needs at times of peak demand. Residents may arrive anytime between 4:00pm and 7:00pm. The format is informal, emphasizing one-on-one exchanges of information so individuals can learn about the project.

For more information about the Arroyo Energy project, contact David Hicks, Public Affairs,LS Power Generation, 619-498-5389, dhicks@lspower.com.

ANNOUNCEMENT

You're invited to a

Public Open House

for

Arroyo Energy

Monday, February 5, 4:00-7:00pm
Black Mountain Elementary School - Gymnasium
3404 N. Santa Maria Road, Golden Valley

Come learn about a small power plant proposed for the I-40 Industrial Corridor to help meet the region's energy needs at times of peak demand. Residents may arrive anytime between 4:00pm and 7:00pm. The format is informal, emphasizing one-on-one exchanges of information so individuals can learn about the project.

For more information about the Arroyo Energy project, contact David Hicks, Public Affairs,LS Power Generation, 619-498-5389, dhicks@lspower.com.

ANNOUNCEMENT

You're invited to a

Public Open House

for

Arroyo Energy

Monday, February 5, 4:00-7:00pm
Black Mountain Elementary School
(Gymnasium)
3404 N. Santa Maria Road
Golden Valley

Come learn about a small power plant proposed for the I-40 Industrial Corridor to help meet the region's energy needs at times of peak demand. Residents may arrive anytime between 4:00pm and 7:00pm. The format is informal, emphasizing one-on-one exchanges of information so individuals can learn about the project.

For more information about the Arroyo Energy project, contact David Hicks, Public Affairs,LS Power Generation, 619-498-5389, dhicks@lspower.com.

EXHIBIT J-4 FACT SHEET/OPEN HOUSE MATERIALS

ARROYO ENERGY

LS Power proposes to build a clean, natural gas-fired power plant to address the growing energy needs of Mohave County and the rest of Arizona. The proposed project will be comprised of four (4) combustion turbine generators designed to meet summer peak demand. The electric production capability of all four (4) units is 175 megawatts and the project site is located just north of the existing Griffith Energy project (600 megawatts).

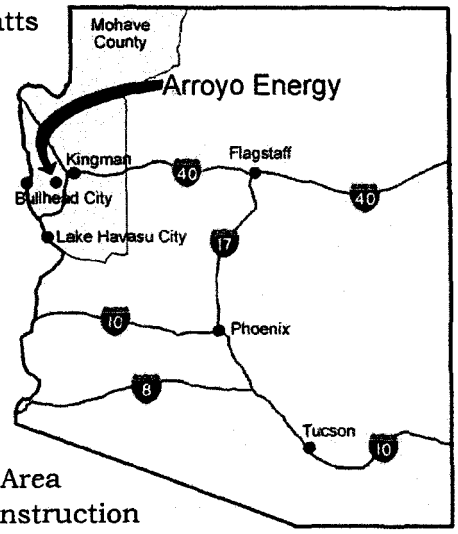

The Arroyo Energy project will efficiently use the existing I-40 Industrial Corridor infrastructure for gas, electricity and water. In addition, the new plant will use the water recycling facilities of the Griffith Energy project to minimize water use.

During the development process, the community will have many opportunities to learn about the proposed project and participate in the review process conducted by the Arizona Corporation Commission, its Siting Committee and other agencies – including the Arizona Department of Environmental Quality and the Western Area Power Administration – as they consider granting permits for the construction and operation of Arroyo Energy.

Project Facts

- Helps meet growing demand for peaking power (energy delivered within 10 minutes of request);
- Responds to regional energy needs, growing by 25 megawatts per year in Mohave County alone;
- Brings $150 million new capital investment to Mohave County and contributes to development of the I-40 Industrial Corridor;
- Generates local revenue to support schools, police, fire, libraries and the Mohave County general fund;
- Utilizes existing infrastructure, including water allotments;
- Minimizes emissions by using clean natural gas and modern control systems;
- Requires no additional off-site right-of-way, roadways, transmission lines or pipelines.

Schedule

File Permits.....1st Qtr 2007
Receipt of Permits.....3rd Qtr 2007
Secure Power Purchase Agreement(s).....3rd Qtr 2007
Commercial Operations Date.....Summer 2008/2009*
*based on customer needs

Contact David Hicks, Public Affairs, LS Power Generation, 619-498-5389, dhicks@lspower.com

Photo of the Griffith Energy Project site looking southwest from I-40

Same photo showing a graphical representation of the proposed Arroyo Energy project

Arroyo Energy Project

January 2007

LS Power Generation Portfolio

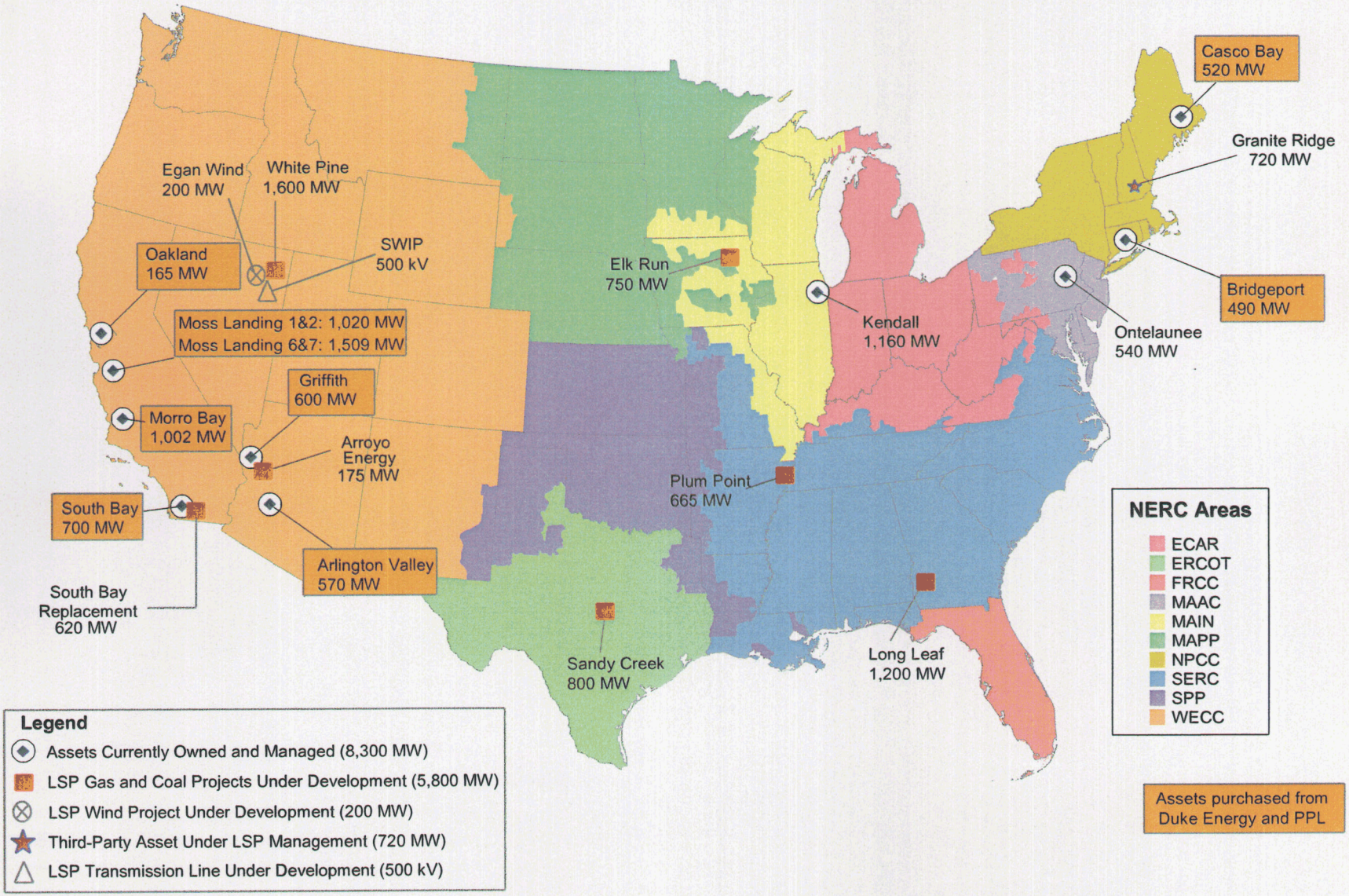

LS Power Facts

- LS Power develops, owns, and operates power plants in the US (8,000 MW)
- LS Power and Dynegy have agreed to combine assets (20,000 MW total)
- LS Power has agreed to purchase Mirant merchant assets (3,500 MW)
- LS Power owns and operates the Arlington Valley and Griffith Energy (1,240 MW)
- **Seeking to develop peaking generation resources near existing power plant facilities in Mohave County or Maricopa County**

The Arroyo Energy Project

- 175 MW – serve peak load equivalent to 175,000 new households
- Natural gas-fired combustion turbines
  - Quick start capability (10 minutes) to respond to demand needs
  - High efficiency combustion turbines
  - Emission controls to minimize air emissions (SCR and Oxidation Catalyst)
  - Efficient water use – only 160 acre-ft per year at expected operating hours
    - Equivalent to annual water use for irrigation of 30-40 acres of alfalfa
- Increases utilization of the I-40 Corridor infrastructure and Griffith Energy infrastructure: land, water, electrical interconnection, gas interconnection, operations and maintenance
- Incremental investment in Mohave County and I-40 Industrial Corridor
  - Preliminary capital cost estimates in the range of $150 to $160 million

Project Site and Interconnections

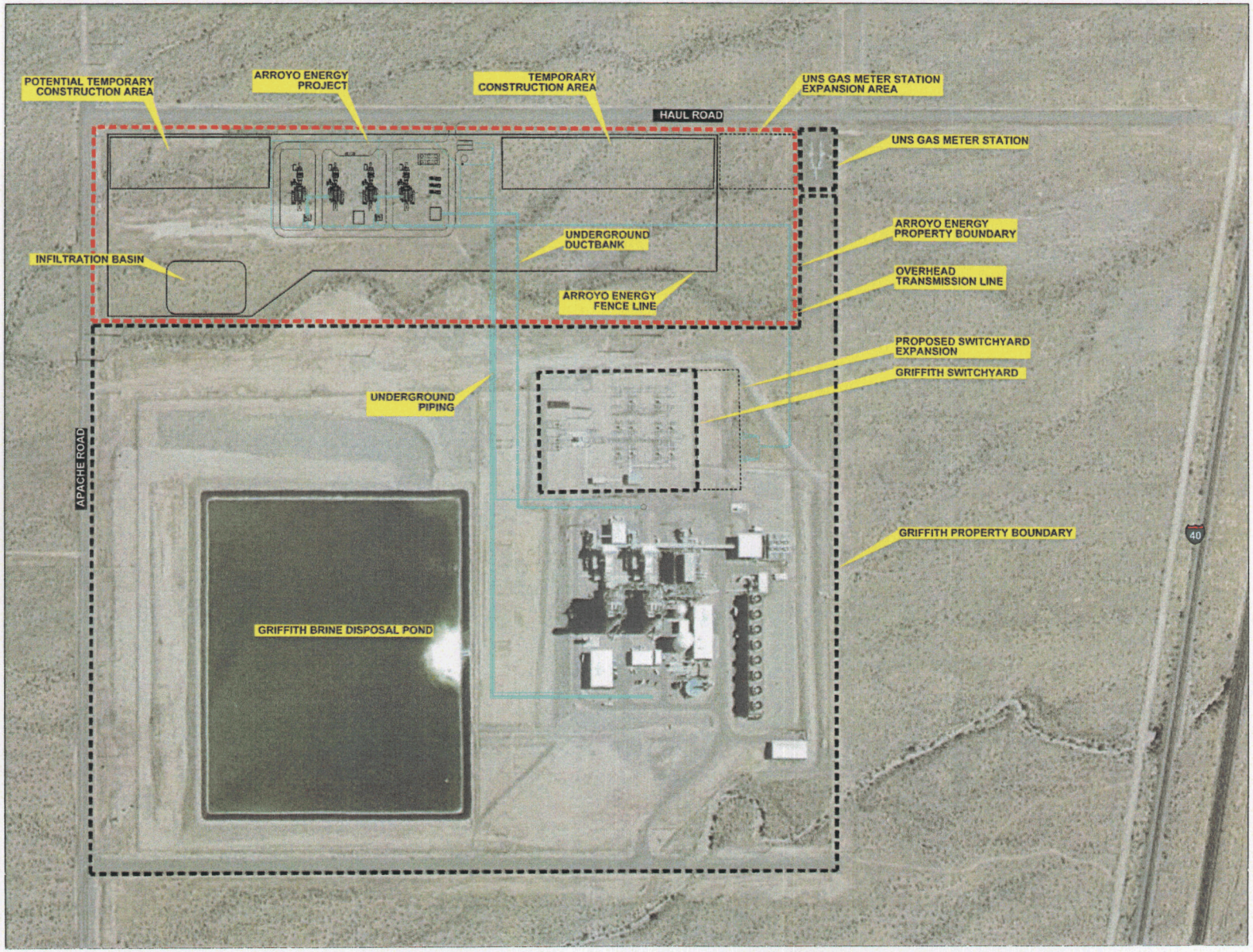

Visual Simulation

Proposed Arroyo Energy Project viewed from the intersection of Haul Road and Apache Road looking southeast

Visual Simulation

Visual simulation of proposed Arroyo Energy Project viewed from Interstate 40

The Need

- Extreme historical and forecasted peak load growth in Mohave County and Arizona
- Mohave County load growth is projected at 25-30 MW per year
- Arizona utilities seeking new peaking generation resources
- No existing simple cycle units in Mohave County to serve peak load profile

The Benefit

- Selected Project Site limits environmental impacts
  - Utilization of existing I-40 Industrial Corridor and Griffith infrastructure within the existing property boundaries
  - No off-site infrastructure development or laterals required for electric transmission, gas transportation or water transportation/supply
    - UNS Gas – existing gas transportation capacity and meter station at northeast property boundary
    - Western Area Power Administration 230 kV switchyard located between the Project and Griffith Energy Project wit
    - Golden Valley Water District #2 water system
- Incremental property tax revenue to Mohave County general fund, schools, fire district and other tax revenue recipients

Arroyo Energy Project Schedule

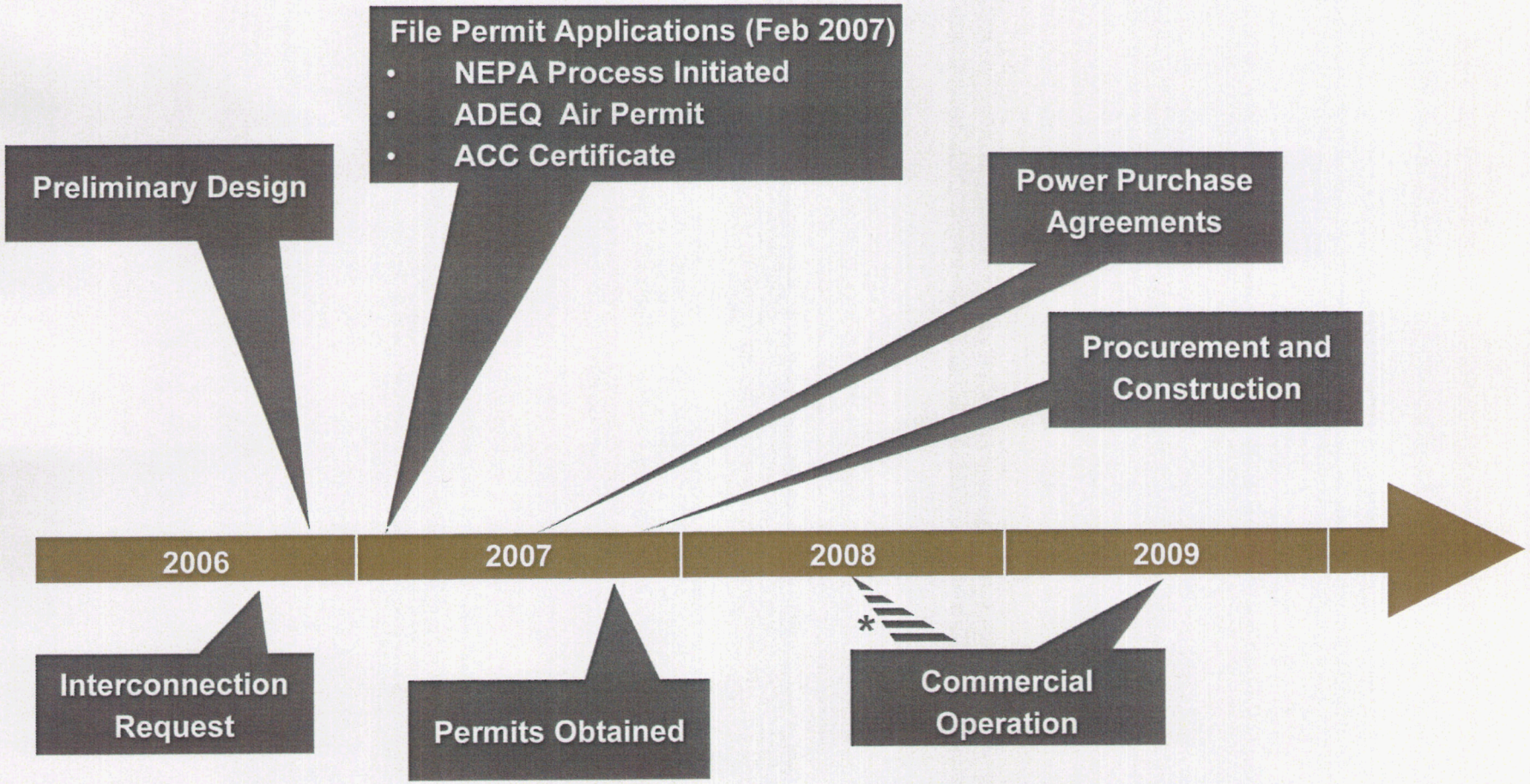

* *based on customer needs*

Project Site and Interconnections

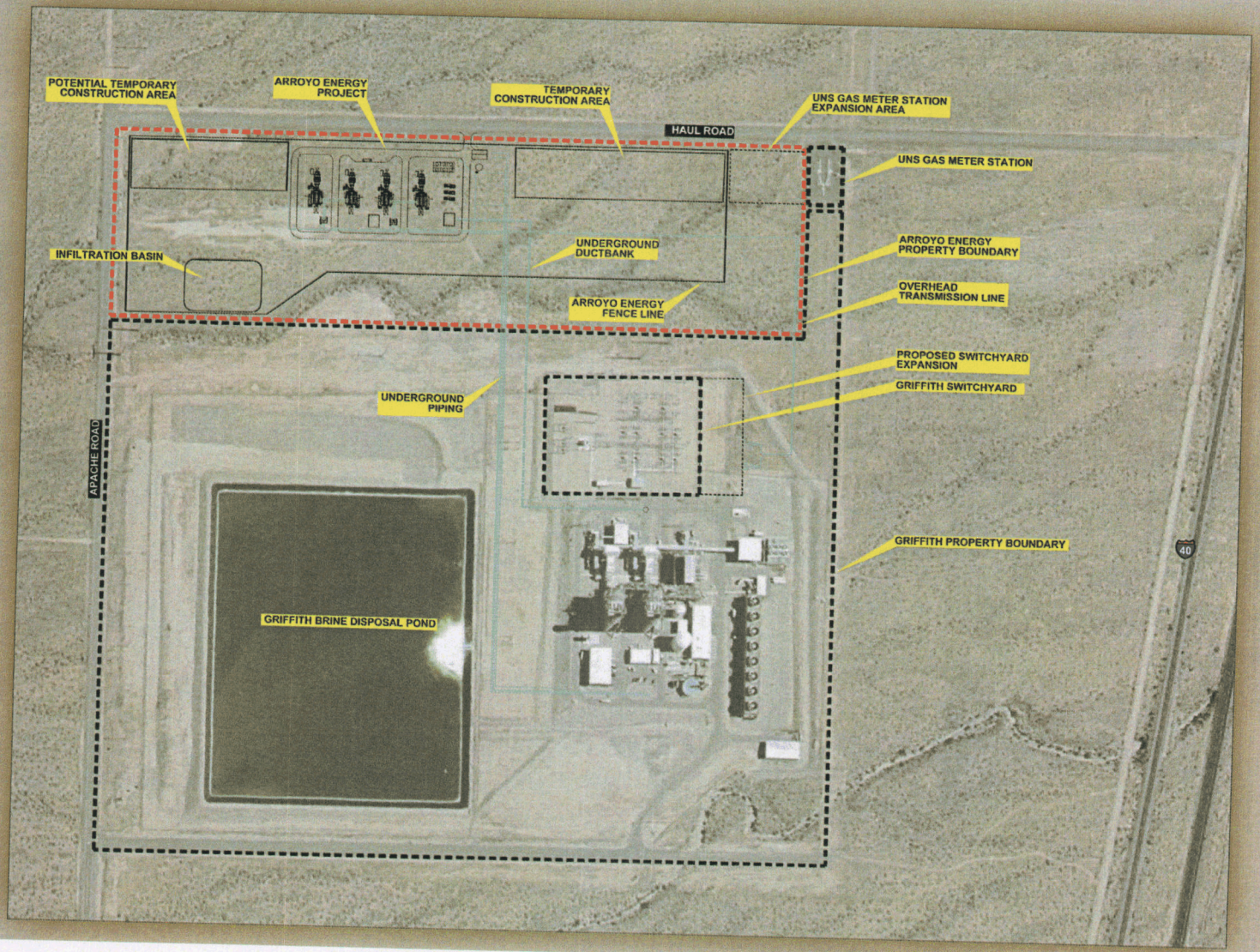

Visual Simulation

Proposed Arroyo Energy Project viewed from Interstate 40

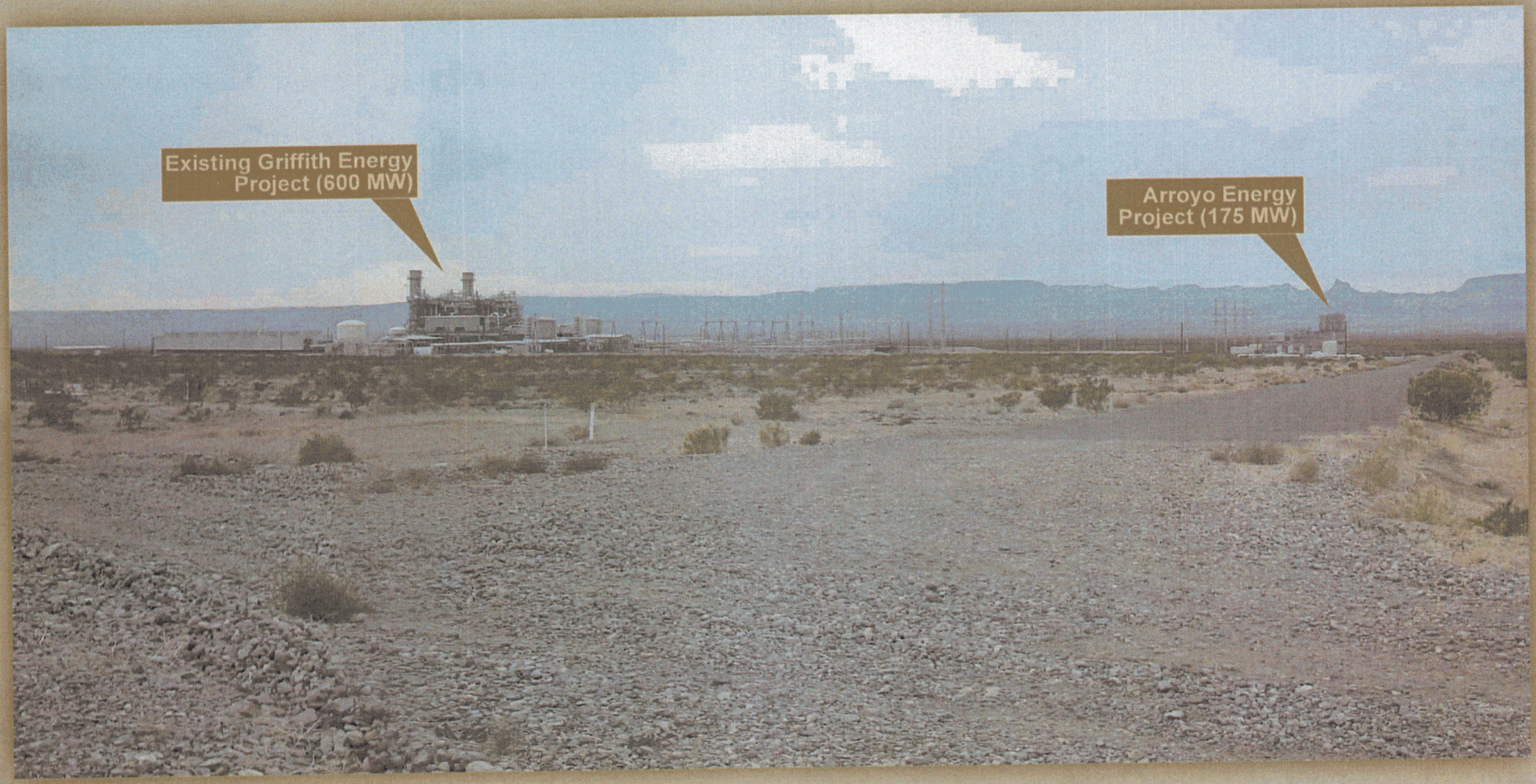

Visual Simulation

Proposed Arroyo Energy Project looking southeast down Apache Road near Dawson Drive

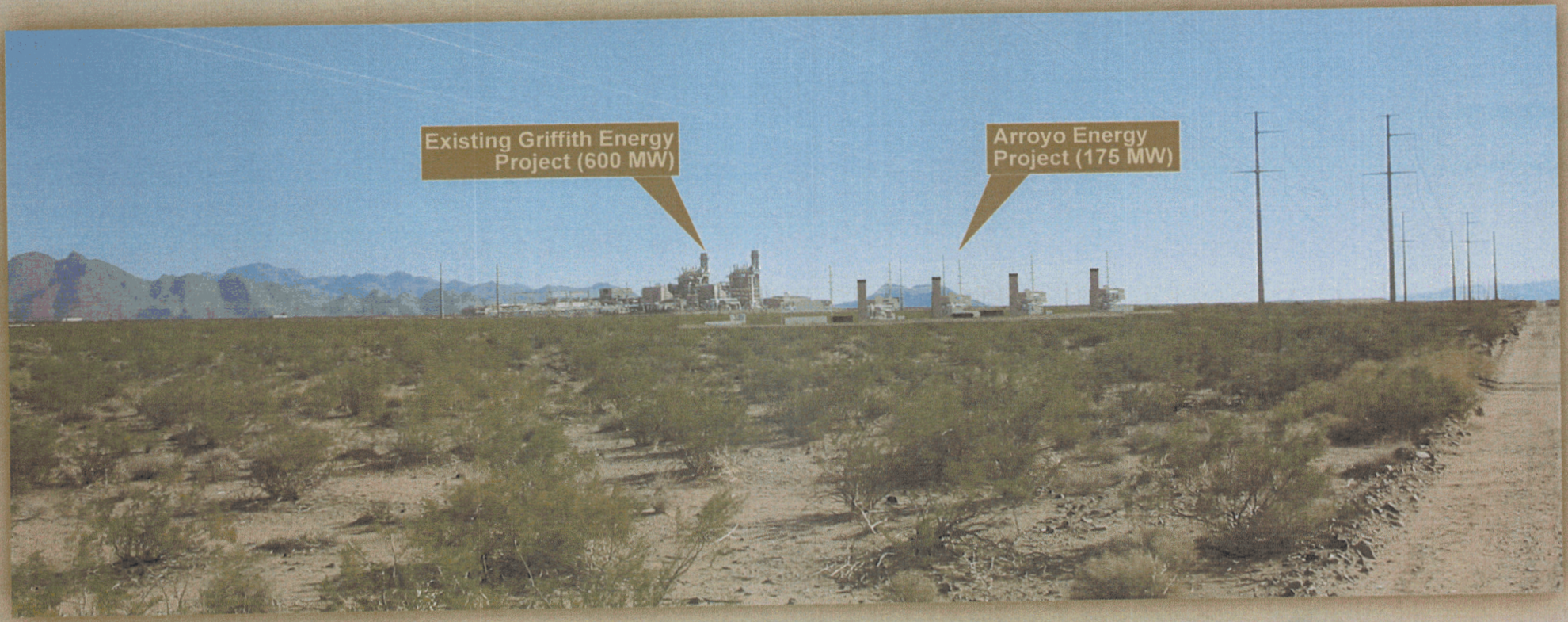

Need and Benefit

- Arizona utilities seeking new peaking generation resources
- No existing simple cycle units in Mohave County to serve peak load profile
- Extreme historical and forecasted peak load growth in Mohave County and Arizona
- Mohave County load growth is projected at 25 MW per year

Arizona Population Projections 2006 - 2015

Summary Table

	2006	2007	2008	2009	2010	2011	2012	2013	2014	2015
Arizona	6,239,482	6,432,007	6,622,885	6,812,137	6,999,810	7,186,070	7,370,993	7,554,429	7,736,022	7,915,629
		3.1%	3.0%	2.9%	2.8%	2.7%	2.6%	2.5%	2.4%	2.3%
Apache	74,691	75,597	76,486	77,361	78,229	79,091	79,957	80,815	81,656	82,496
Cochise	134,789	137,708	140,560	143,346	146,037	148,672	151,258	153,784	156,247	158,650
Coconino	132,826	135,070	137,261	139,388	141,457	143,494	145,494	147,431	149,327	151,150
Gila	55,102	55,769	56,427	57,092	57,766	58,420	59,091	59,768	60,454	61,128
Graham	35,873	36,271	36,666	37,054	37,441	37,814	38,180	38,557	38,936	39,307
Greenlee	8,281	8,259	8,238	8,220	8,209	8,191	8,181	8,182	8,184	8,188
La Paz	21,489	21,779	22,062	22,347	22,632	22,923	23,213	23,501	23,783	24,070
Maricopa	3,764,446	3,879,150	3,992,887	4,105,623	4,217,427	4,328,379	4,438,459	4,547,590	4,655,640	4,762,473
Mohave	194,920	201,693	208,372	214,949	221,443	227,858	234,196	240,453	246,627	252,706
		3.5%	3.3%	3.2%	3.0%	2.9%	2.8%	2.7%	2.6%	2.5%
Navajo	112,672	115,331	117,971	120,591	123,172	125,732	128,275	130,790	133,254	135,671
Pima	980,977	1,003,918	1,026,506	1,048,796	1,070,723	1,092,369	1,113,749	1,134,853	1,155,599	1,175,967
Pinal	269,892	293,312	316,899	340,660	364,587	388,674	412,925	437,304	461,787	486,363
Santa Cruz	45,303	46,545	47,777	48,998	50,210	51,418	52,607	53,800	54,973	56,144
Yavapai	212,722	220,170	227,468	234,626	241,667	248,570	255,356	262,042	268,600	275,056
Yuma	195,499	201,435	207,305	213,086	218,810	224,465	230,052	235,559	240,955	246,260

Selected Project Site minimizes environmental impacts

- Utilization of existing I-40 Industrial Corridor and Griffith infrastructure within the existing property boundaries
- No new infrastructure required for electric transmission, gas or water transportation
  - UNS Gas – existing gas transportation capacity and meter station at northeast property boundary
  - Western Area Power Administration 230 kV switchyard located between the Arroyo Energy Project and Griffith Energy Project
  - Golden Valley Water District #2 water system

Incremental property tax revenue to Mohave County general fund, schools, fire district, and other tax recipients

Project Facts

- 4 General Electric LM6000 combustion turbine generators (175 MW)
- Helps meet growing demand for peaking power (energy delivered within 10 minutes of request)
- Response to regional energy needs, growing by 25 megawatts per year in Mohave County alone
- Brings $150 million new capital investment to Mohave County
- Generates local revenue to support schools, police, fire, libraries and the Mohave County general fund
- Utilizes existing infrastructure, including water allotments
- Minimizes emissions by using clean natural gas and modern control systems
- Requires no additional off-site right-of-way, roadways, transmission lines or pipelines

Project Schedule

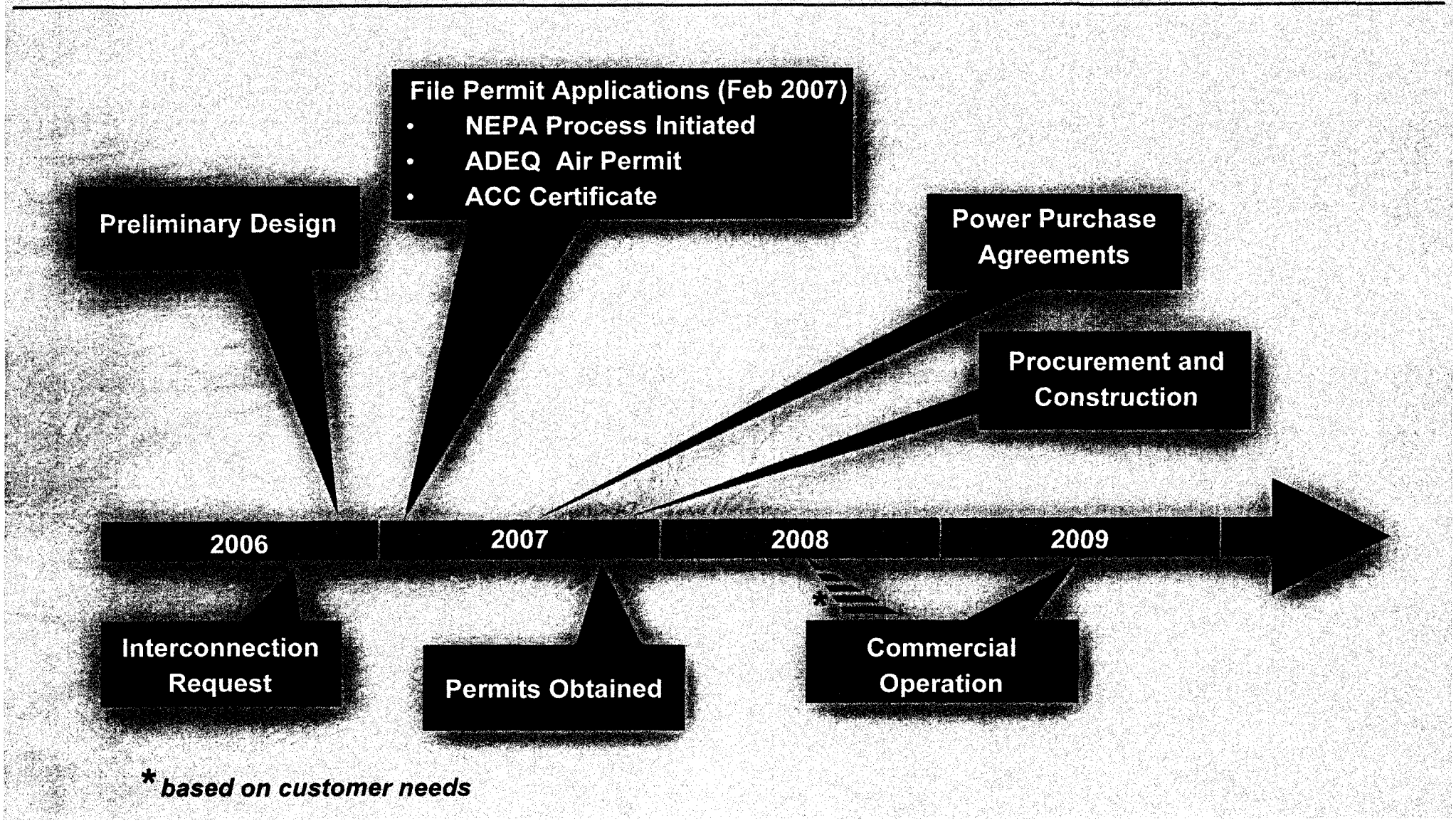

*based on customer needs

How Does a Gas Turbine Unit Generate Energy?

When the unit is in its operation mode, air is drawn in from the outside and compressed. This air is then mixed with natural gas and ignited.

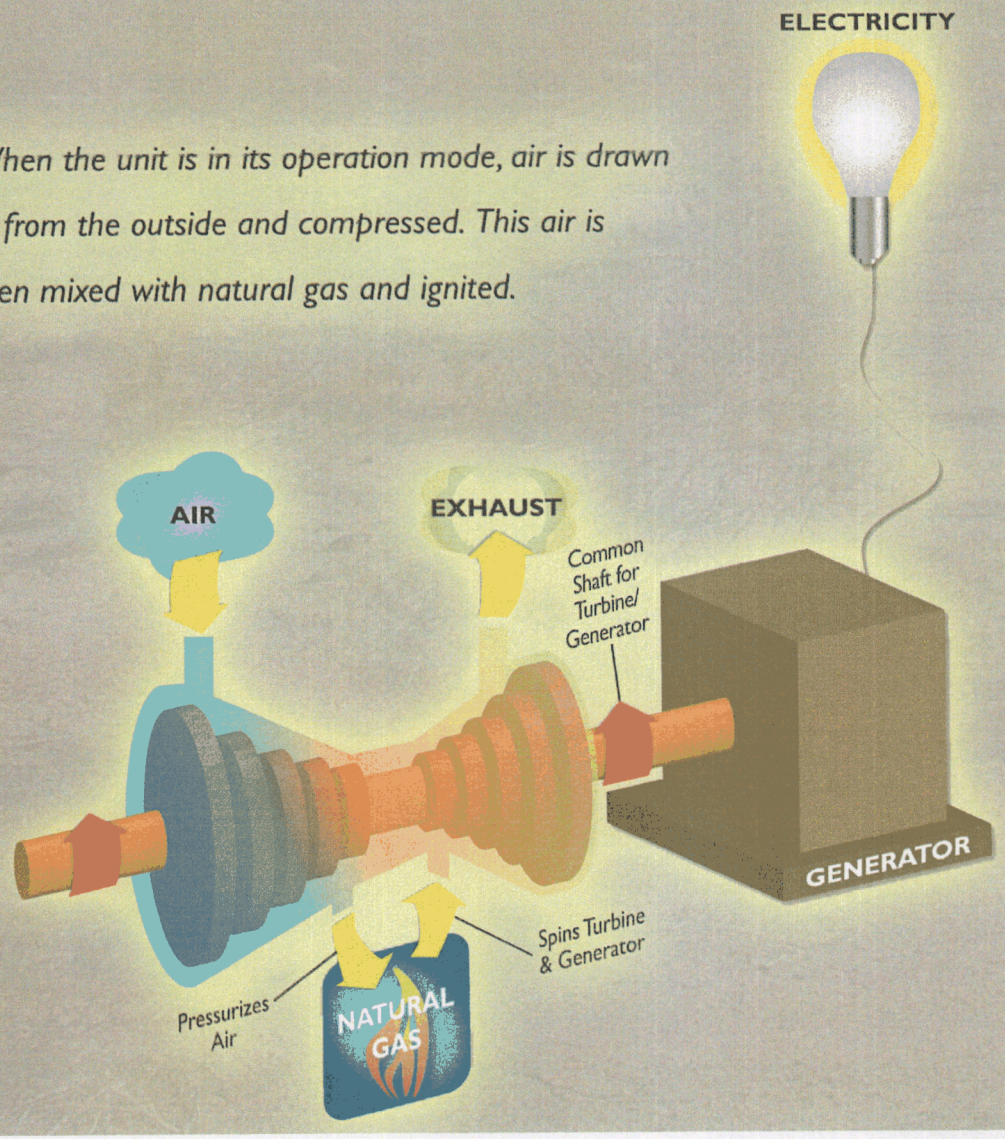

The expanding gas turns the turbine the same way steam does in a steam-electric station. The turbine then turns the electric generator.

Water Facts

- NO ADDITIONAL WATER capacity needed – the Arroyo Energy Project will utilize existing water allotments of Griffith Energy
- Annual water use equivalent to irrigating 25-30 acres of alfalfa (160 acre-feet for 2500 annual operating hours)
- Simple cycle plants use 66% less water per megawatt hour (MWh) than conventional combined cycle generation facilities
- Water is used to reduce air emissions and maximize energy output on high temperature days when power is critically needed by consumers
- Utilizing existing Griffith Energy water treatment and recycling facilities will make optimal re-use of water supply
- Project will not require any improvements to the Golden Valley Water Improvement District #2 water supply system

EXHIBIT J-5 PUBLIC COMMENTS AND ISSUES AND PRELIMINARY RESPONSES

-----Original Message-----
From: Kevin Davidson [mailto:Kevin.Davidson@co.mohave.az.us]
Sent: Tuesday, January 30, 2007 5:30 PM
To: David Hicks
Subject: Arroyo Energy proposal in Mohave County

David:

Thank you for distributing a flyer announcing the upcoming public meeting in Golden Valley next Monday. As a point of correction, the Black Mountain Elementary School actually fronts on Highway 68 and is west of Sonic. You may have an older address. The same thing happened to me once.

Can you give me a little more information on the site's legal description. For example, in which Township, Range and Section is the power plant to be located? Your surveyor and/or engineer should have this information if I seem to be speaking in a foreign language.

Can you explain a little about the power plant's design and operational characteristics? Will it be wet-cooled, dry-cooled or of hybrid design?
The Caithness proposal in the Big Sandy Valley was a hybrid design.
Will this plant be in operation 24/7 or is it designed as a peaking plant? It is good to see that you have contacted the ACC.

I look forward to seeing you at the meeting on Monday afternoon.

Kevin Davidson
Planner II
Mohave County Planning & Zoning Department

-----Original Message-----
From: David Hicks [mailto:DHicks@LSPower.com]
Sent: Friday, February 02, 2007 8:05 AM
To: Kevin Davidson
Cc: Ian Calkins
Subject: RE: Arroyo Energy proposal in Mohave County

Hi Kevin --

See attached for answers to your questions.

And hopefully I will get a chance to meet you on Monday.

Thanks a lot,

David

David Hicks
Western Region Public Affairs Manager
LS Power Generation, LLC
619-498-5389 (office)
619-410-3246 (cell)

Questions from Kevin Davidson, County Planner

Can you give me a little more information on the site's legal description. For example, in which Township, Range and Section is the power plant to be located?

Answer 1:

The Project is located on a parcel of undeveloped land comprising the North seven hundred (700) feet of the North One-half of the Southwest Quarter of Section 6, Township 19 North, Range 17 West, Gila & Salt River Base & Meridian, Mohave County, Arizona, containing approximately forty (40) acres.

Can you explain a little about the power plant's design and operational characteristics?

Answer 2:
The Project is comprised of four (4), General Electric (GE) LM6000 PC SPRINT NxGen combustion turbine generators (CTGs) with inlet air chiller modules. The Project will be designed to produce 175 MW of net electrical output with a heat rate of 9975 Btu/kWh (HHV) based upon the design condition ambient temperature of 90 degrees Fahrenheit (°F). The CTGs are capable of rapid start-up, allowing the Project to respond to fluctuations in electric demand within ten (10) minutes.
Emissions from the CTGs will be controlled by a combination of water injection and selective catalytic reduction (SCR) to reduce nitrogen oxides (NOx) emissions and an oxidation catalyst to reduce carbon monoxide (CO) and volatile organic compound (VOC) emissions. After passing through the SCR system, the exhaust gases exit through the attached stack. Each of the four exhaust stacks will be 85 feet in height and 10 feet in diameter. The stacks will be equipped with continuous emissions monitors (CEMS) and test connections for performance monitoring.

Will it be wet-cooled, dry-cooled or of hybrid design?

As a simple cycle gas turbine, there is no "cooling" in same context as a combined cycle generating facility such as the Griffith Energy project or as was proposed for Big Sandy since there is the absence of any steam cycle.

Answer 3:
Water uses include pretreated water for makeup to the chiller cooling module, service water, and demineralized water for NOx control and SPRINT power augmentation. The Project minimizes water consumption and wastewater generation by integrating with the water treatment and wastewater treatment equipment of Griffith.
One design approach to minimize water use is to capture and recycle the condensate created by the CTG inlet air chillers. Depending on temperature and humidity, the condensate flow available from the inlet coils can be up to 25 gpm.
At design conditions, assuming that no chiller condensate is recovered, the maximum total raw water requirement is 370 gpm, or 355,200 gallons per day (gpd), based upon 16 hours of operation. With consideration of condensate recovery, the maximum total raw water requirement is 345 gpm or 331,200 gpd.

Will this plant be in operation 24/7 or is it designed as a peaking plant?

Answer 4:

The Project has been designed to supply energy to the customer within ten (10) minutes of a unit start up. Given this quick start capability and the associated operating performance and fuel efficiency of simple cycle technology, the Project will serve the peak load requirements of customers in Mohave County, the broader state of Arizona load, and surrounding regional load centers.

The amount of operating hours and startups for any individual simple cycle unit is dependent on (i) the location, (ii) the load profiles of the customer, (iii) fuel prices, and (iv) the general power market supply and demand conditions. A typical operating profile for a simple cycle turbine will be 1500-3000 operating hours and 150-250 start-ups per year. The actual annual operating hours and startups of the Project will be determined by the economic dispatch of each unit as determined by customer needs. The operating hours for each of the CTGs is predicted at 2500 hours per year and will primarily operate during the months of May through September when high temperatures drive peak loads.

From: Barby Jacobs [mailto:bjacobs@imail.mohave.edu]
Sent: Wednesday, January 31, 2007 6:55 AM
To: David Hicks
Subject: acquisition of Griffith energy plant

I received your project update and notice of public open house in Golden Valley, Arizona.

I do not believe that the desert will sustain the growth expected and see the area as crowded with lights, cars, people, crime and pollution as Las Vegas from which many wish to escape.

For your part I would appreciate a major effort in using down facing, amber lighting in all areas of your project. We are slowly losing the nighttime star viewing. Thank you for any effort you can manage in this area.

Barby Jacobs

From: David Hicks [mailto:DHicks@LSPower.com]
Sent: Wednesday, January 31, 2007 10:10 AM
To: bjacobs@mohave.edu
Subject: RE: acquisition of Griffith energy plant

Hi Barby –

Thanks for your note. I will forward it to the project's technical people so they are aware of your concerns.

Please feel free to contact me again if you have any other issues you want to discuss.

Thanks again,
David

-----Original Message-----
From: David Hicks [mailto:DHicks@LSPower.com]
Sent: Wednesday, February 07, 2007 4:00 PM
To: MICA WILSON
Subject: RE: Arroyo Energy project

Hi Mica -

Thanks for your note. By way of an answer -- it's too soon in the process to know who a potential construction contractor might be. We need to get permits to build the plant first. We also will most likely want to reach an agreement with a buyer for some or all of the energy that will be generated at Arroyo before we actually begin construction.

I will keep your name on file. When the time comes, I will try to get back to you on this issue. Keep my name as well, and if you see something in the paper about the permits and/or a power purchase agreement, send me another note.

Thanks a lot, and if you have any other questions feel free to contact me.

David

David Hicks
Western Region Public Affairs Manager
LS Power Generation, LLC
619-498-5389 (office)
619-410-3246 (cell)

-----Original Message-----
From: MICA WILSON [mailto:herhighness_23@hotmail.com]
Sent: Wednesday, February 07, 2007 2:47 PM
To: David Hicks
Subject: Arroyo Energy project

Mr. Hicks,
I am researching to find out who will be the contractor on the Arroyo Energy
project. We live in Lake Havasu City and my husband is a combo welder/pipefitter. He is currently in Pascagoula, MS working at one of Chevron's refinerys. It is my understanding that construction jobs will be
created during this project. Is there any information you can give me regarding this so that he may contact them regarding possible employment?
Thank you for you help. I really appreciate it.

Mica Wilson
Western Truss and Components
Truss Technician Assistant

From: David Hicks [mailto:DHicks@LSPower.com]
Sent: Wednesday, February 07, 2007 4:29 PM
To: Gary Blanton
Subject: RE: Arroyo Power Plant

Hello Mr. Blanton.

Thank you very much for your note.

To answer your questions: During the construction phase of the project, we will employ an average of about 100 workers over the course of approximately 10 months. Once the plant is finished, it will require three or four full-time employees to operate. I am not sure if additional families will be moving to Kingman to fill those jobs – although, if they do, it will of course be a relatively small number of people.

In terms of company relationships with local schools, we do not at this time have any on-going partnerships. The Griffith Energy plant – which LS Power bought from Duke Energy and PPL last year – has an ongoing charitable donations program. And I believe it has given some donations to local schools in the past. In addition, as you know, Kingman Unified receives a large share of the tax dollars paid each year by Griiffith. The same will be true of Arroyo. (We expect to invest at least $150 million to construct Arroyo Energy.)

All that said, if you have some ideas in mind for partnerships with the schools, we would be very interested in sitting down with you to discuss them. Perhaps we can come by to see you sometime soon to talk about those possibilities, as well as the details of the proposal.

For some general background info, I have attached our fact sheet – which has some basics about the equipment, schedule, etc.

It's a pleasure to hear from you. If you have any other questions please don't hesitate to contact me.

Thanks again,

David

David Hicks
Western Region Public Affairs Manager
LS Power Generation, LLC
619-498-5389 (office)
619-410-3246 (cell)

From: Gary Blanton [mailto:gblanton@kusd.org]
Sent: Tuesday, February 06, 2007 5:11 AM
To: David Hicks
Subject: Arroyo Power Plant

Good Morning Mr. Hicks,

I was unable to attend your informational meeting last night at Black Mountain Elementary School. I was hoping you could send me some information about the operation and plant. I have several questions.
Is how many employees does the power plant anticipate on having?
Will additional families be moving to Kingman for employment at the plant?
Does the company partnership with elementary schools and in particular, specific programs in high schools?

I look forward to hearing from you and Welcome to our Community.

Gary E. Blanton
Director of Facilities
Kingman Unified School District #20

Arroyo Energy / Sign-In Sheet

Event: Community Forum, Mohave County Library at Lake Havasu, AZ
Date: February 5, 2007, 1:00-2:00pm

Name	Address	Phone	Email
Richard Creager	3545 Bali Dr LHC		
Brenda Frame	731 Scout Dr, LHC 86406		
Diane Williams	BLM		
Nancy Sannone	365. S. Lake Havasu Ave.	453-2111	
[redacted] Richmond	1625 S. Bellp Corona CA 92882	cell 951 675-4675 951 737-2441 Hm	m.rich@sbcglobal.net
Judy Thomas	1791 Firefly LHC AZ 86404	453-5935	
Robin Schilling	2515 Angler Dr LHC 86404	854-9118	
Bill Goodell	2885 Wolapai Kingman, AZ	715-7809	kingmanproperties@citylink.net
Harry Bremmer	2045 Mesquite Ave #102	928-208-8761	bdent1467@npgcable.com
Nate Hurt	3775 Hiawatha Dr	928-854-244	HURTNHJR@NPGCABLE.COM

Arroyo Energy / Sign-In Sheet

Event: Community Forum, Mohave County Library at Lake Havasu, AZ
Date: February 5, 2007, 1:00-2:00pm

Name	Address	Phone	Email
DELORES BURNTUP	PO 1542 Topock	928 768 4827	
Gladys May	PO Box 182 Topock	928 768-5920	
Stella McWhirter	P.O. Box 1216 Topock	928-768-8349	
Don McWhirter	" "	" " " "	
Leslie Sandra		854-7305	
Carol Reutter	LHC FOL	680-6924	
Myrtle Meyer FOL	LHC 2965 Blue Water Rd.	453-[redacted]657	
Dorris Meyer	"	"	
ERIC COWAN	630 Plaza Drive Highlands Ranch CO 80129	303-471-3400	
CHIEF Dick Twyman	3061 CHEMEHUEVI PL LH 86406	928 854 2145	
Tony Rapp	2225 W. Acoma	453-4237 x 236	

Arroyo Energy / Sign-In Sheet

Event: Community Forum, Mohave County Library at Lake Havasu, AZ
Date: February 5, 2007, 1:00-2:00pm

Name	Address	Phone	Email
Michael Dwyer	2157 Rudolph Dr L.H.C.	505-2576	
James Gray	433 Silver King Dr	486 6303	
Kathy Hodel	2460 Demaret Dr	855 7975	
Donald VanBrunt	2484 S. Hwy 66 Kingman AZ 86401	928 279 5143	
Peter Foyl	1916 Montana Vista	612-308-9338	
Sally M. Davis	2045 Mesquite Ave 102	928-208-8560	
Mark Peak	1801 J. St. Sacramento, CA 95814	916-444-6666	
William Miller	2126 McCulloch	928 680-6060	wtm@citlink.net
Michelle Burke	3311 Tolteca Dr. LHC AZ 86406	928-505-3607	

Arroyo Energy / Sign-In Sheet

Event: Community Forum, Mohave County Library at Lake Havasu, AZ
Date: February 5, 2007, 1:00-2:00pm

Name	Address	Phone	Email
DEAN VACKMAN	P.O Box 713 Topock	788-1745	
[illegible]	Box 969	Topock	
Dottie Heegel	Box 965 Topock	768-7803	
ELISEO O. MARIANI	P.O. Box 296 C.H.C.	680-0061	
Robert H. BELLIVEAU	LHC 86403 221 COMANCHE LANE	680-0708	
JAY MOYES	1850 N. Central Phx Az 85004	602-664-2106	
DANA DILLER	"	480 664 8154	
Conrad Blevins	PO Box 2355, LHC Az 86405	928-453-8852	
Jackie Watson	3840 Breakwater Dr - 86406		
[illegible] Rouse	1698 Diamond Dr - 86403		
Lynda French	1435 Franklin Dr. Kingman Az	86401 602-206-7486	lyndaf@azcommerce.com

Arroyo Energy / Sign-In Sheet

Event: Community Forum, Mohave County Library at Lake Havasu, AZ
Date: February 5, 2007, 1:00-2:00pm

Name	Address	Phone	Email
Gary Kellogg	314 London Bridge Rd. LHC, AZ 86403	928-505-7333	gkellogg@lakehavasu.org
Marlene Leiser	3234 Medicine Bow Dr LHC AZ 86406		
Dennis Schrling	2515 Angler Dr LHC 86404		
Patricia Duncan	4014 Window Rock Rd LHC 86406	928-855-4730	PADUNCAN@citlink.net
Lynnie Campbell	770 McCulloch	928-566-8752	
Bobbi & Don Helms	2579 Ascot LHC	680 4081	don@vobeth.com
Buster Johnson	2001 College Dr LHC 86403	435 0724	johnsbd@frontiernet.NET
Thomas Jenner	2536 Avocado Ln LHC 86406	855-6122	

Arroyo Energy / Sign-In Sheet

Event: Community Forum, Mohave County Library at Lake Havasu, AZ
Date: February 5, 2007, 1:00-2:00pm

Name	Address	Phone	Email
Carol Stone	3973 Chickasaw Plaza		
Sue Donahue	1966 Thrasher LHC	928-764-1760	SDONAHUE@NPGCABLE.COM
CARL SPARKS	Topock AZ	928 899-3276	
HOLLY WOKEE	TOPOCK AZ	928 768 2293.	
Jon Barber	TOPOCK AZ	768-9027	
Melvin J Zerch	Topock AZ	768 2739	
Peggy Zerche	TOPOCK AZ	—	
arthur adams	TOPOCK AZ	768-4452	
Joyce Parker	Topock AZ	768-9340	
Ellie Pecciarro	Topock AZ	768-5484	
Polly Bane	Topoc AZ	768 4827	

Arroyo Energy / Sign-In Sheet

Event: Community Forum, Mohave County Library at Lake Havasu, AZ
Date: February 5, 2007, 1:00-2:00pm

Name	Address	Phone	Email
Bruce Blizzard	PO Box 945 Topock	928-768-3666	fierobruce@hotmail.com
John Kendig	34 Nolina Ln	" 855-9060	fuzjohn@citlink.net
ALLAN STURTEVANT	53 NOLINA LN	680-1092	BARNEY1516@FRONTIERNET.NET
John P. Stacey Sr	5775 Mission Blvd	855-3807	JStacey@HeirloomRealty.com
MARDEL Mitchell	1011 INCA WAY, LHC	855-6424	mardelmitchell@landam.com
RANDY MITCHELL	"	"	"
Pat Landry	3787 Bluegrass	855-9721	patlandry@realtor.com
Jane Clynkop	2780 Daytona Ave	855-3933	

Arroyo Energy / Sign-In Sheet

Event: Community Forum, Mohave County Library at Lake Havasu, AZ
Date: February 5, 2007, 1:00-2:00pm

Name	Address	Phone	Email
Al Fuller	Topock AZ P.O. Box 841	928 768 6671	
Diana Heagle	3080 Erwin Lane LHC	928-764-2455	
Bill DeJulio	3498 Airway Ave Kingman	928-681-9902	
Richard Karl	336 Acoma Blvd. S. L.H.C., AZ 86406	928-706-3931	
Linda Elder	PO Box 2661 LHC 86405	928-680-1081	

Arroyo Energy / Sign-In Sheet

Event: Community Forum, Mohave County Library at Lake Havasu, AZ
Date: February 5, 2007, 1:00-2:00pm

Name	Address	Phone	Email
Dolores George	2298 Palo Verde Bl. N LHC 86404	928 680-0609	DGeorge678@AOL.com
Michael Gilbelyou	2498 Hiway Ave	928-681-8923	mgilbelyou@uesaz.com

Arroyo Energy / Sign-In Sheet

Event: Public Open House, Black Mountain Elementary School, Golden Valley, AZ
Date: February 5, 2007, 4:00-7:00pm

Name	Address	Phone	Email
FREDERICK D WILLIAMS	8331 W OATMAN HWY GOLDEN VALLEY AZ 86413	928-565-4981	FREGLO@CITLINK.NET
Richard Bone	6600 W Outman Rd		
Glenda Bone	" "	565-5165	
Dian Roe	3256 S. Tennessee Rd Golden Valley, AZ 86413		
[illegible]ERT E JACKSON	3535 N HASSAYAMPA GOLDEN VALLEY		
Jeannie Mills	P.O. Box 20501 Bullhead City, AZ	928-716-0519	
HAROLD DONDANVILLE	3565 N SANTA MARIA RD Golden Valley 86413	928 8976703	LAND4YOU@frontiernet.net
JIM McDONALD	4258 N. CONCHO RD	928-565-5989	
Sheila Welter	7313 BOLSA DR GV	565-4952	
Kevin Davis	J. O'Ray 7900	(928) 757-0903	Kevin.Davis@co.mohave.az.us
Tom Sockwell	1130 Hancock	(928) 758-0713	Tom.Sockwell@co.mohave.az.us

Arroyo Energy / Sign-In Sheet

Event: Public Open House, Black Mountain Elementary School, Golden Valley, AZ
Date: February 5, 2007, 4:00-7:00pm

Name	Address	Phone	Email
James Johnson	Golden Valley 528 Santa Maria RD	565-5940	
Ro O'Sullivan	Ed's Camp Route 66	565-3108	
Brian Henderson	4366 Box J. Dr.	692-6778	
Gladys E. Kingsland	4124 Sunrise Drive GV	715-1844	
Jill Lovejoy	Mohave Community College	692-7095	
Joel Ehrhardt	4105 N. Adams St Kingman AZ 86409		
James Kanelos	4402 Oatman Rd GV. AZ.		
Donald Wade Brand	Kingman 86401 2484 S. Hwy 66	928 279-5143	

Arroyo Energy / Sign-In Sheet

Event: Public Open House, Black Mountain Elementary School, Golden Valley, AZ
Date: February 5, 2007, 4:00-7:00pm

Name	Address	Phone	Email
IRV Lubin	5647 BOLSA DR. G.V.	565-2843	IRV_LUBIN@YAHOO.COM
PATRICIA AUSTIN	979 S. SANTA MARIA RD	565-5502	pgAUSTIN@FRONTIERNET.NET
ROBERT K HOLSINGER	5505 Hy 68	565-3100	
Penny Gale	3235 Ames Ave Kingman	(928) 692-9190	azure3@citlink.net
Scott+Sharae Stewart	PO BOX 3339 Kingman, AZ 86402	(702) 497-3976	
Verna Schwab	4195 Hwy 68-C PMB 239 G.Valley		landbroker@citlink.net
Chris Mousley	PO Box 6277 Kingman AZ 86402	753-7125	
ALLAN ROE	3256 S. Tennessee Rd. Golden Valley, Az.	565-4762	

Arroyo Energy / Sign-In Sheet

Event: Public Open House, Black Mountain Elementary School, Golden Valley, AZ
Date: February 5, 2007, 4:00-7:00pm

Name	Address	Phone	Email
GLORIA WILLIAMS	8331 OATMAN HWY G.V.	928-565-4881	FREGLO@CITLINK.NET
SUSAN Bayer	7656 W. ALONGO DR GV	928-565-9192	
TIM NUTT	4018 MUSTANG SPRINGS CIRCLE	928-530-8086	
Joyce Pietal	3485 Ranch G.V	565-2764	—
Bruce Mitchell	2419 Lillie Ave Kingman	(928)753-5622	monam@citlink.net
Lorraine Freeney	3817 N. ARABY RD	928 565-3341	rgfeeney@citlink.net

Arroyo Energy
Comment Card

Name: Carol Stone Date: 2/5/07

Address: 3973 Chickasaw Plaza

City: Lake Havasu City State: AZ Zip: 86406

Phone: 505-2865

Email: cjstone@citlink.net

Comments (use back if necessary): Thanks for information. It promotes good will. Nice job from speakers. I look forward to your beginning building and operation.

Would you like someone with Arroyo Energy to follow-up with you? Yes No

Can we add you to our mailing list for future announcements or meetings about Arroyo Energy? Yes No

Arroyo Energy
Comment Card

Name: REX LAMEW Date: 2-5-07

Address: 2970 COCONINO DR

City: LHC State: AZ Zip: 86406

Phone: 928-727-4739

Email:

Comments (use back if necessary):

THIS would BE ANOTHER GREAT PROJECT FOR

THE I-40 CORRIDOR - Jobs - TAXES

Would you like someone with Arroyo Energy to follow-up with you? Yes No

Can we add you to our mailing list for future announcements or meetings about Arroyo Energy? Yes No

Arroyo Energy
Comment Card

Name: Mardel Mitchell Co. Mngr Date: 2/5/07
c/o Transnation Title
Address: 1011 INCA WAY

City: LAKE HAVASU CITY State: AZ Zip: 86403

Phone: 928-855-4196

Email: mardelmitchell@landam.com

Comments (use back if necessary): Happy to see new infastructure to serve Mohave County & also be profitable to you thru sales of water thru other contracts

Would you like someone with Arroyo Energy to follow-up with you? (Yes) No

Can we add you to our mailing list for future announcements or meetings about Arroyo Energy? (Yes) No

Arroyo Energy
Comment Card

Name: RANDALL MITCHELL Date: 2-5-07

Address: 1011 INCA WAY

City: LAKE HAVASU CITY State: AZ Zip: 86406

Phone: 928-855-6424

Email: randall.mitchell@gmacm.com

Comments (use back if necessary): LOOK LIKE A GOOD THING FOR THE UPCOMING ~~[illegible]~~ GROWTH OF MOHAVE CO.

Would you like someone with Arroyo Energy to follow-up with you? Yes No

Can we add you to our mailing list for future announcements or meetings about Arroyo Energy? Yes No

Arroyo Energy
Comment Card

Name: Buster Johnson Date: 2-5-07

Address: 2001 College DR

City: LHC State: AZ Zip: 86403

Phone: 928-453-0724

Email:

Comments (use back if necessary): much needed to meet Demands of AZ. - GOOD COMPANY TO Locate in Mohave County

Would you like someone with Arroyo Energy to follow-up with you? Yes No

Can we add you to our mailing list for future announcements or meetings about Arroyo Energy? Yes No

Arroyo Energy
Comment Card

Name: Betty Lloyd Date: 2-5-07

Address: 1916 Montana Vista

City: LHC State: AZ Zip: 86403

Phone: 612-308-9338

Email:

Comments (use back if necessary): Local short start up peak demand capacity is very valuable. Also, using existing plant infrastructure is a great economy of scale.

Would you like someone with Arroyo Energy to follow-up with you? Yes No

Can we add you to our mailing list for future announcements or meetings about Arroyo Energy? Yes No

Arroyo Energy
Comment Card

Name: Ro O'Sullivan Date: 2-5-06

Address: 8500 W. Route 66

City: Kingman State: Az Zip: 86413

Phone:

Email: YASHTI@HOTMAIL

Comments (use back if necessary): Who benefits from this - who Receives the power? Did you Receive a similar deal Like Griffith? If Griffith is working at a third why do we need another plant? Are you Receiving a tax cut?

Would you like someone with Arroyo Energy to follow-up with you? (Yes) No

Can we add you to our mailing list for future announcements or meetings about Arroyo Energy? (Yes) No

Was this originally planned when Griffith was built?

Arroyo Energy
Comment Card

Name: TIM NUTT Date: 2-5-07

Address: 4019 MUSTANG SPRINGS CIR

City: KINGMAN State: AZ Zip: 86401

Phone: 928-530-8086

Email:

Comments (use back if necessary): WILL YOU BE USING ALL OF THE REMAINING WATER ALLOTMENT'S FOR THIS WATER SERVICE AREA

Would you like someone with Arroyo Energy to follow-up with you? Yes No

Can we add you to our mailing list for future announcements or meetings about Arroyo Energy? (Yes) No

Arroyo Energy
Comment Card

Name: GLADYS E. KINGSLAND Date: 2-5-07

Address: 4124 SUNRISE DRIVE

City: GOLDEN VALLEY, AZ State: AZ Zip: 86413-8321

Phone: 928-715-1844

Email: —

Comments (use back if necessary):

WHY ARE YOU FURTHER DRAWING OUR AQUIFER? WHEN DO WE SEE AN END TO IT? HOW MUCH POWER WILL BE USEABLE LOCALLY OR WILL IT BE SENT OUT OF STATE LIKE GRIFFITH? WILL YOU BE PAYING TAXES OR LOOKING FOR A FREE RIDE, TOO?

Would you like someone with Arroyo Energy to follow-up with you? Yes No

Can we add you to our mailing list for future announcements or meetings about Arroyo Energy? Yes No

Arroyo Energy
Comment Card

Name: FREDERICK D WILLIAMS Date: 2-5-07

Address: 8331 W OATMAN HWY

City: GOLDEN VALLEY State: AZ Zip: 86413

Phone: (928) 565-4881

Email: fregl0@cinc.net

Comments (use back if necessary): WITH THE LONG LASTING DROUGHT WE ARE IN AND THE PROVEN LACK OF WATER NOW AND IN THE FORSEEABLE FUTURE I HOPE YOU ARE GOING TO USE THE DRY-COOL METHOD

Would you like someone with Arroyo Energy to follow-up with you? Yes No

Can we add you to our mailing list for future announcements or meetings about Arroyo Energy? Yes No

Arroyo Energy
Comment Card

Name: Ira Lubin Date: 2-5-43

Address: 5647 Bolsa Dr.

City: Golden Valley State: Az Zip: 86413

Phone: 928-565-2843

Email:

Comments (use back if necessary): Nothing in this plant for us. Just using our water & polluting our air.

Would you like someone with Arroyo Energy to follow-up with you? Yes No

Can we add you to our mailing list for future announcements or meetings about Arroyo Energy? Yes No

Arroyo Energy
Comment Card

Name: Kevin A Davidson Date: 2-5-2007

Address: 3162 Courtney Ave

City: Kingman State: AZ Zip: 86401

Phone: (928) 753-1742

Email:

Comments (use back if necessary): Prefer powerplant be dry-cooled* in light of Recent Paul Marera Hydrological Study indicating stress to the aquifer

* hybrid cooling may also be considered give summer time temperatures

Would you like someone with Arroyo Energy to follow-up with you? Yes No

Can we add you to our mailing list for future announcements or meetings about Arroyo Energy? Yes No

Arroyo Energy
Comment Card

Name: JACK Ehrhardt Date: Today

Address: 4105 N. Adams St

City: Kingman State: AZ Zip: 86409

Phone: 928 7574202

Email:

Comments (use back if necessary): go Dry cooled — only no more water — why not renewable partnering with this,

Would you like someone with Arroyo Energy to follow-up with you? Yes No

Can we add you to our mailing list for future announcements or meetings about Arroyo Energy? Yes No

Arroyo Energy
Comment Card

Name: James Kanelos Date: 2-6-07

Address: 4402 Oatman Rd

City: Golden Valley State: AZ Zip: 86413

Phone:

Email:

Comments (use back if necessary): Thank you for having this open meeting!

Would you like someone with Arroyo Energy to follow-up with you? Yes No

Can we add you to our mailing list for future announcements or meetings about Arroyo Energy? Yes No

Arroyo Energy
Comment Card

Name: DENNIS COFFEE Date: 2/5/07

Address: 1809 E. SCARLET PLUME ST.

City: KINGMAN State: AZ Zip: 86409

Phone: 928-681-3149

Email: denniscoffee@hotmail.com

Comments (use back if necessary): HOW MANY MEGAWATTS HAVE BEEN SOLD TO MOHAVE COUNTY (ANY ENTITY) SINCE THE COMPETION OF GRIFFITH POWER?

Would you like someone with Arroyo Energy to follow-up with you? Yes No

Can we add you to our mailing list for future announcements or meetings about Arroyo Energy? Yes No

Arroyo Energy
Comment Card

Name: GLORIA WILLIAMS Date: 2-5-07

Address: 8331 OATMAN HWY

City: GOLDEN VALLEY State: AZ Zip: 86413

Phone: 928-565-4881

Email: fregjo@CITLINK.NET

Comments (use back if necessary): why are we building another energy plant when Griffith is only working at 1/3 capacity? Who will get the power? Will you come under the sweetheart deal that Griffith has about the water? Are you a subsidiary of

Would you like someone with Arroyo Energy to follow-up with you? (Yes) No OVER

Can we add you to our mailing list for future announcements or meetings about Arroyo Energy? (Yes) No

Griffith - or vice-versa? Must be a tie in somewhere for you to be able to use Griffith facilities.
Do you get a sweet tax deal from the County like Griffith?
Can't we use the I-40 Industrial Corridor more efficiently than building another energy plant?
You are going to be a 'peaker plant' according to the Miner
Griffith tried to tell us we had outages in the summer
thats why we needed the plant. We checked and the only
outages we had were caused by storms, not shortages of
power. If Griffith isn't working at full power why do
we need you to augment it?
Are you going to look for an alternative source of
water instead of draining the aquifer?

As a result of public notices and meetings, 16 written responses have been received by Northern Arizona Energy, and are presented in **Exhibit J**. A summary of the comments and issues from those responses is presented below:

Type of Respondent:

Federal Agency	–
State Agency	–
Indian Communities	–
Local Agency	–
Residential Development Co.	–
Businesses	–
Organizations	–
Citizens	16

Issues Raised in Comments:

Air quality	1
Alternative locations	–
Cultural resources	–
Economic benefits	2
Effects of transmission lines	–
Future expansions	–
General support	6
General interest	–
Grazing rights	–
Land use in and near ROW	–
Need for the electricity	5
Oversight of plant owners	–
Permitting	–
Renewable energy	1
Taxes	3
Visuals	–
Water consumption/recirculation	7
Wildlife	–

Preliminary Responses to Issues Raised:

The following highlights the key issues that have been raised and how they have been responded to by the Northern Arizona Energy Project.

EXHIBIT K TRANSMISSION INTERCONNECTION DESCRIPTION

The Northern Arizona Energy Project will interconnect with the electrical grid at the existing Western 230kV Griffith Switchyard. The entirety of the electric interconnection with the Western system occurs within the Project Property or the adjacent Griffith Property. The interconnection of the Project requires two new very short 230kV transmission lines that will be constructed within the Project Property and will connect the high-side of the GSU transformers to the nearly-adjacent expanded Griffith Switchyard.

The Griffith Switchyard consists of twelve 230kV circuit breakers arranged in a breaker-and-a-half configuration. The interconnection of the two new transmission lines associated with the Project requires the addition of a new breaker-and-a-half bay consisting of three new 230kV circuit breakers with associated isolation switches. This expansion of the Griffith Switchyard will require additional property (approximately one (1) acre) to be deeded to Western ownership.

The Project's electric transmission lines, constructed on the Project Property, will be constructed with double circuits on tubular steel poles. The poles will be 100 to 120 feet tall with three arms on each side, approximately 17 feet apart to support the conductors and a smaller arm on each side above the conductor arms to support the overhead ground wires used for lightning protection. **Figure K-1** shows a schematic of the proposed transmission structure. A visual rendering of the proposed structures is included in the project rendering in **Figure G-1**.

The line between the Project GSU transformers and the Griffith Switchyard will be approximately 2657 feet long and will require approximately 12 structures.

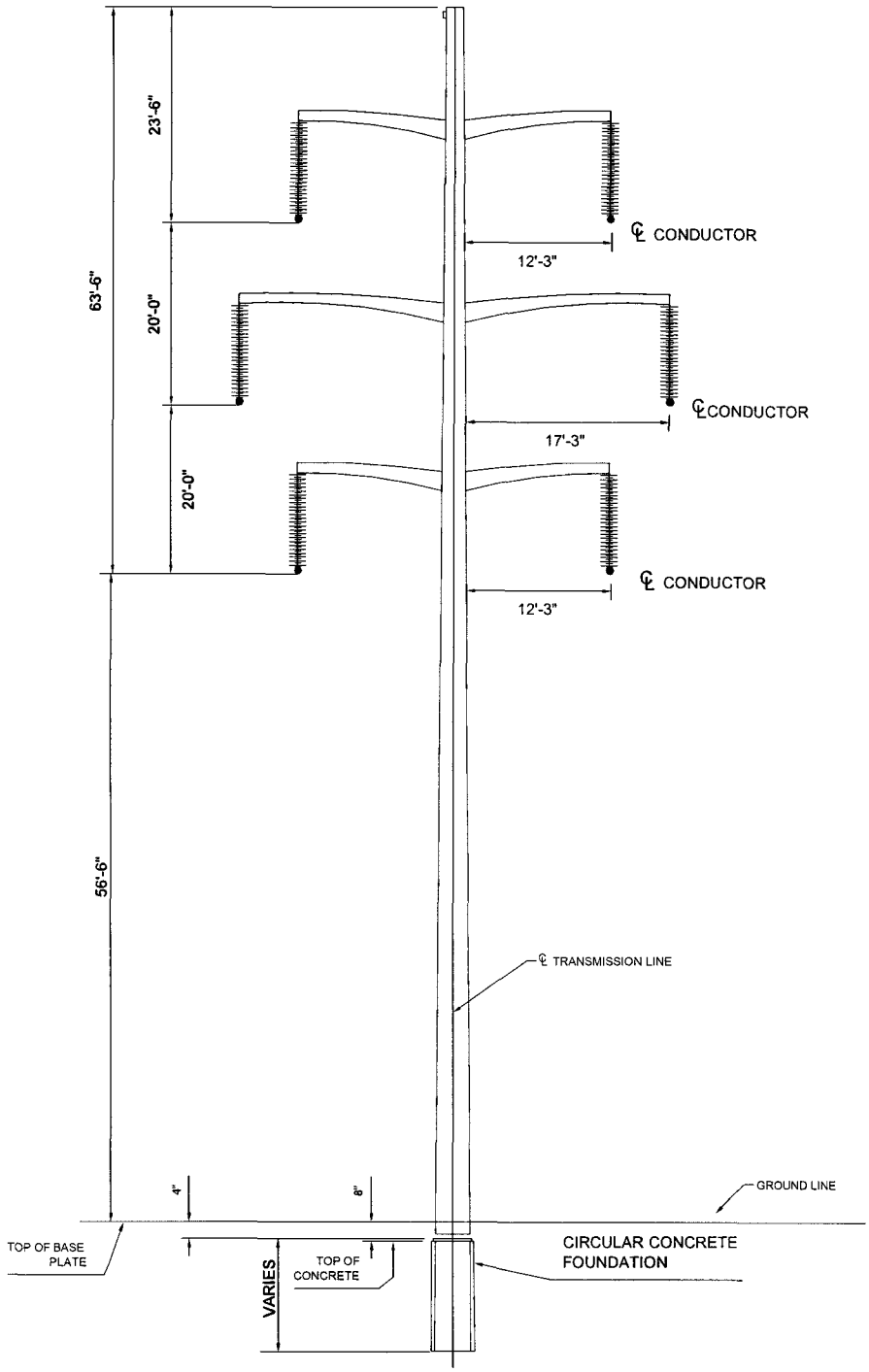

NORTHERN ARIZONA ENERGY PROJECT

Figure K-1
Proposed Transmission Structure

ANALYSIS AREA: MOHAVE COUNTY, ARIZONA	
Date: 02/19/07	File: Figure K-1.dwg
Drawn By: ETC	Layout: 001

Source: Griffith CEC

REFERENCES CITED IN APPLICATION

Becker, Kenneth M. and Edgar K. Huber. 2001. The Griffith Energy Project: A Cultural Resources Inventory of Three Miles of Natural-Gas Pipeline near Kingman, Arizona. Statistical Research, Inc., Tucson, Arizona. Prepared for Greystone Environmental Consultants, Inc., Greenwood Village, Colorado. Submitted to Western Area Power Administration, Lakewood, Colorado.

Becker, Kenneth M., Edgar K. Huber, Benjamin R. Vargas, and Anne Q. Stoll. 2001. The Griffith Energy Project: A cultural Resources Inventory of Four Miles of Natural-Gas Pipeline Connection to the EPNG Line South of Kingman, Arizona. Statistical Research, Inc., Tucson, Arizona, Technical Report No. 00-07. Prepared for Greystone Environmental Consultants, Inc., Greenwood Village, Colorado. Submitted to Western Area Power Administration, Lakewood, Colorado

Behnke, R.J., and D.E. Benson. 1983. Threatened and Endangered Fishes of the Upper Colorado River Basin. Cooperative Extension Service, Colorado State University, Bull. 503A, Fort Collins, Colorado.

BLM. 1996. Kingman-Havasu Transmission Project, Environmental Assessment and Proposed Plan Amendment. Prepared for U.S. Department of the Interior, Bureau of Land Management, Phoenix District and Yuma District, EA-AZ-025-96-043. Phoenix, Arizona.

Breen, Judith. 2004. A cultural Resources Survey of a 298.5 Acre Parcel West of Interstate 40, South of Kingman, Mohave County, Arizona. The Logan Simpson Design, Inc., Tempe, Arizona, LSD Technical Report No. 035300.

Brown, D.E. 1994. Biotic Communities: Southwestern United States and Northwestern Mexico. University of Utah Press, Salt Lake City, Utah.

Crocker, M. J. and F.M Kessler. 1982. Noise and Noise Control Volume II. CRC Press, Inc. Boca Raton, Florida. 300 pages.

EPA. 1974. Information on Levels of Environmental Noise Requisite to Protect Public Health and Welfare with an Adequate Margin of Safety. Office of Noise Abatement and Control. EPA 550/9-74-004. March.

EPA. 2001. Compilation of Air Pollutant Emission Factors, AP-42, Office of Air Quality Planning and Standards, Research Triangle Park, NC. [Web Page] Located at: http://www.epa.gov/ttn/chief/ap42/index.html.

Ezzo, Joe and Carl Späth. 1998. Griffith Energy's Proposed Power Plant Site, Cultural Resource Inventory for Certification of Environmental Compatibility, Mohave County, Arizona. Statistical Research, Inc., Tucson, Arizona, and Greystone Environmental Consultants, Inc., Greenwood Village, Colorado. Submitted to the Arizona Corporate Commission.

Fitzgerald, J.P., and J. LaBonde. 1980. Report on Population Status and Distribution of Bald Eagles Wintering Along the South Platte River in Colorado, 1979 - 1980. U.S. Department of Interior, U.S.D.I. Bureau of Land Management and Water and Power Resources Service, Lower Missouri Region. Denver, Colorado.

FWS. 2007. Threatened and Endangered Species System. [Web Page] Located at: http://ecos.fws.gov/tess_public/StateListing AndOccurrence.do?state=AZ. Accessed on January 10, 2007.

Ganey, J.L., and R.P. Balda. 1989. "Home-Range Characteristics of Spotted Owls in Northern Arizona." Journal of Wildlife Management, 53 (4): 1159-1165.

Ganey, J.L., and R.P. Balda. 1994. "Habitat Selection by Mexican Spotted Owls in Northern New Mexico." The Auk, Volume 111(1): 162-169.

Griffith Energy LLC. 1998. Application for a Certificate Of Environmental Compatibility. Prepared for the State of Arizona Power Plant and Transmission Line Siting Committee.

Harris, Cyril M. 1991. Handbook of Acoustical Measurements and Noise Control. McGraw-Hill, New York, New York.

Hoffmeister, D.E. 1986. Mammals of Arizona. University of Arizona Press and the Arizona Game and Fish Department, Tucson, Arizona.

Kingman Arizona Visitors Bureau. 2006. To Do and See. [Web Page] Located at: http://www.kingmantourism.org/to-do-and-see/index.php. Accessed on Jan. 12, 2007.

Mohave County. 1995. Mohave County, Arizona, General Plan, adopted March 10, 1995 and amended 2003. Original text and graphics prepared by Frelich, Leitner and Carlisle. [Web Page] Located at: http://www.co.mohave.az.us/depts/pnz/forms/Mohave_County_General_Plan.pdf. Accessed: January 9, 2007.

Mohave County. 2002. Golden Valley Area Plan. Original text and graphics prepared by Frelich, Leitner and Carlisle, and updated by Mohave County Planning and Zoning Department. August 14, 2002. [Web Page] Located at: http://www.co.mohave.az.us/depts/pnz/GVAP.pdf. Accessed: January 9, 2007.

Mohave County. 2005a. Mohave County, Arizona, Draft General Plan. Mohave County, Arizona. [Web Page] Located at: http://www.co.mohave.az.us/deptfiles/PZ/misc_file/GP_Draft1b.pdf. Accessed: January 9, 2007.

Mohave County. 2005b. Zoning Ordinance. Mohave County Planning and Zoning Department. Adopted September 7, 1965; revised December 7, 2005. [Web Page] Located at: http://www.co.mohave.az.us/depts/pnz/forms/Mohave_County_Zoning_Ordinance.pdf. Accessed: January 9, 2007.

Mohave County Geographic Information Systems Department. 2006. Mohave County Interactive Map Viewer. [Web Page] Located at: http://gis.co.mohave.az.us/. Accessed on Jan. 12, 2007.

Mohave County Planning and Zoning Department. 2005. Draft Mohave County General Plan. [Web Page] Located at: http://www.co.mohave.az.us/depts/pnz/pnz_default.asp. Accessed on Jan. 12, 2007.

Mohave County Planning and Zoning Department. 2005. Golden Area South Area Plan. [Web Page] Located at: http://www.co.mohave.az.us/depts/pnz/pnz_default.asp. Accessed on Jan. 12, 2007.

Monson, G. and A.R. Phillips. 1981. Annotated Checklist of the Birds of Arizona. 2nd. Ed. University of Arizona Press, Tucson, Arizona.

Murray, R.C. and V. Dickenson. 1996. Management Plan for the Sonoran Desert Population of the Desert Tortoise in Arizona. Arizona Game and Fish Dept., Phoenix, Arizona.

National Climatic Data Center. 2007. Arizona Climate Summaries, available from Western Regional Climate Center, Reno, NV. [Web Page] Located at:http://www.wrcc.dri.edu/summary/climsmaz.html

Rutman, S. 1992. Handbook of Arizona's Endangered, Threatened and Candidate Plants of Arizona. U.S. Fish and Wildlife Service. Phoenix, Arizona.

Spahr. R., L. Armstrong, D. Atwood, and M. Rath. 1991. Threatened, Endangered, and Sensitive Species of the Intermountain Region. USDA Forest Service, Ogden, Utah.

Sprunt, A., and F.S. Ligas. 1963. "Continental Bald Eagle Project. Progress Report 3." A Florida Notebook. Proceedings of the National Audubon Society Convention. 59: 2-7.

Stebbins, R.C. 1966. Western Reptiles and Amphibians. Houghton Mifflen Company. Boston, Massachusetts.

Swisher, J.F. 1964. "A Roosting Area of the Bald Eagle in Northern Utah." Wilson Bull. 76(2): 186-187.

Tibbets, T.J, M.K. Sogge, and S.J. Sferra. 1994. "A Survey Protocol for the Southwestern Willow Flycatcher (Empidonax trailii extimus)." Technical Report NPS/NAUCPRS/NRTR-94/04. USDI, National Park Service and Colorado Plateau Research Station, Denver, Colorado.

Western Area Power Authority and BLM. 1999. Griffith Energy Project Final Environmental Impact Statement. Prepared by U.S. Department of Energy, Western Area Power Administration, Desert Southwest Region, Phoenix, Arizona, and U.S. Department of the Interior, Bureau of Land Management Kingman Field Office, Kingman, Arizona.