0000060145

ORIGINAL

FENNEMORE CRAIG, P.C.

3003 North Central Avenue, Suite 2600
Phoenix, Arizona 85012-2913
(602) 916-5000

28DR

Arizona Corporation Commission
DOCKETED

OCT 0 5 2006

DOCKETED BY

Patrick J. Black
Direct Phone: (602) 916-5400
Direct Fax: (602) 916-5600
pblack@fclaw.com

Law Offices
Phoenix (602) 916-5000
Tucson (520) 879-6800
Nogales (520) 761-4215
Las Vegas (702) 692-8000

October 5, 2006

Via Regular Mail

Reginald Lopez
Arizona Corporation Commission
400 West Congress
Tucson, Arizona 85701-1347

RECEIVED
2006 OCT -5 P 4: 48
AZ CORP COMMISSION
DOCUMENT CONTROL

Re: Mingus Panorama Estates Homeowners Association
Docket No. W-20477A-06-0558

Dear Mr. Lopez:

I am in receipt of your letter dated September 25, 2006. Please accept this correspondence as Mingus Panorama Estates Homeowners Association's ("Mingus HOA") response to the materials requested in your letter.

1. Exhibit J (Engineering Plans for water system) does not include a plan design summary section which typically is a general description of the system which includes assumptions, fire flow requirements, projected water use data, etc. that the engineer used in designing the proposed water system. Please provide this information or a copy of the omitted section of the Engineering Plan.

Response: Attached as **Exhibit 1** is a copy of the Water System Design Report which provides more detail concerning the water system for Mingus Panorama Estates.

2. Exhibit I (Application for Approval to construct water supply system) explains that the well pump tests for quantity and quality of water have been completed for the Mingus Panorama Estates water system. Please provide Staff with a copy of the referenced well test results.

Response: Attached as **Exhibit 2** is a copy of the Hydrologic Study submitted with Mingus Panorama Estates' Application for an Analysis of Water Adequacy (included with the Application as Exhibit M). This Hydrologic Study contains the well test results referenced in Exhibit I to the Application. Also attached as **Exhibit 3** is a letter from the Arizona Department

of Water Resources (ADWR) dated September 11, 2006. The letter indicates that the ADWR concludes, upon review of Mingus Panorama Estates' Application for an Analysis of Water Adequacy, that Mingus Panorama Estates has sufficient water .

3. The Application references Exhibit L as including a Hydrology Report, however, Exhibit L actually includes an engineer's report for subdivision drainage design. Please provide Staff with a copy of the Hydrology Report.

Response: See Response to Question No. 2 above.

4. Has a certified operator been selected to operate the water system upon its completion?

Response: A certified operator has been selected. That operator is Contract Wastewater Operations, LLC. A copy of the preliminary proposal is attached as **Exhibit 4**.

We appreciate your willingness to discuss these issues, and are confident this information will provide Staff with what it needs to determine the application sufficient. Should you have any further questions, please do not hesitate to call. Thank you for your time and assistance in this matter.

Sincerely,

Patrick J. Black

PB:msj

Enclosures

cc: Clara Mak (w/out encl.)
Docket Control (w/ encl.)
Steve M. Olea, Utilities Division (w/ encl.)

1841474.3/17917.001

Exhibit 1

WATER SYSTEM DESIGN REPORT
FOR
MINGUS PANORAMA ESTATES

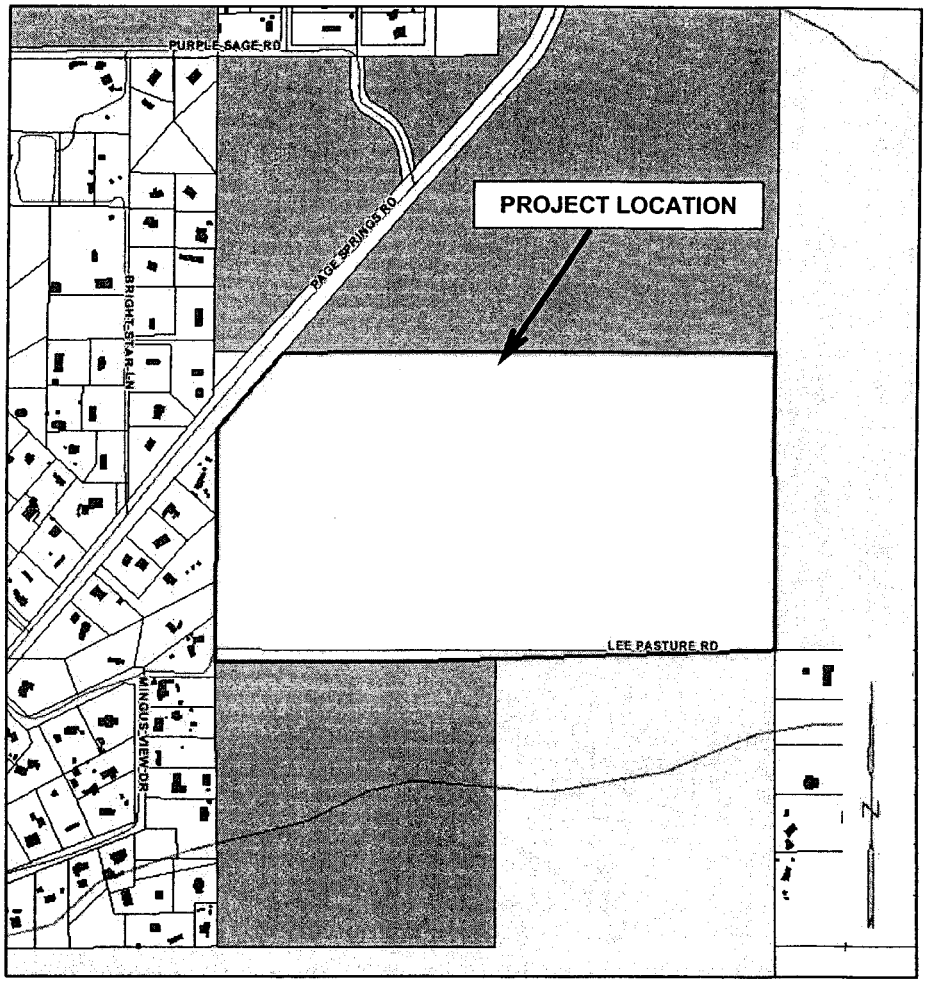

PREPARED BY:

SEC INC.
-SINCE 1974-

www.sec-landmgt.com

July 2006

Registered Professional Engineer (Civil)
CERTIFICATE NO.
37322
LUKE A.
SEFTON
Date Signed 27 JUN 06
ARIZONA U.S.A.

WATER SYSTEM DESIGN REPORT
FOR
MINGUS PANORAMA ESTATES

LOCATED WITHIN THE
CORNVILLE, AZ
APN 407-33-051

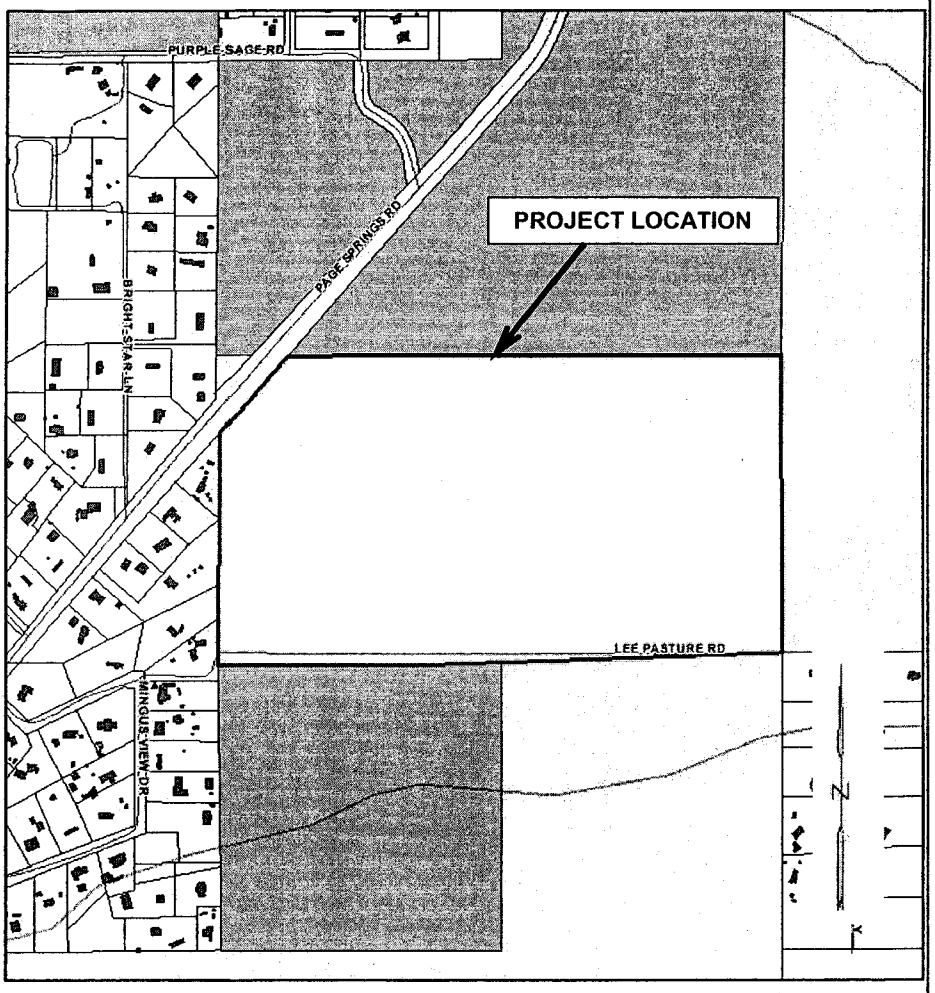

OWNER/DEVELOPER:
Clara Mak/Kurt Wuersch
350 Shadow Rock Drive
Sedona, AZ 86336

PROJECT ENGINEERS/ PLANNERS/SURVEYORS:
SEC, INC.
www.sec-landmgt.com

CORPORATE OFFICE:
info@sec-landmgt.com
20 Stutz Bearcat Drive, #6
Sedona, AZ 86336
(928) 282-7787

BRANCH OFFICE:
info@sec-landmgt.com
516 East Highway 89A, #12
Cottonwood, AZ 86326
(928) 634-5889

Corporate Engineer: Joseph Holgate, P.E., Registration #: 6387
Project Engineer: Luke A. Sefton, P.E., Registration #: 37322
luke.sefton@sec-landmgt.com
Design Engineer: Krishan Ginige
krishan@sec-landmgt.com

© 2005, SEC, Inc., All Rights Reserved. This document is protected under the United States copyright Act. No part may be reproduced in any form or by any means or stored in a database or retrieval system, without the prior written permission of SEC, Inc.

REPORT CONTENTS

DESCRIPTION	PAGE
REPORT CONTENTS	i.
I. **GENERAL LOCATION & DESCRIPTION**	2
A. PROJECT LOCATION	2
B. PROPERTY DESCRIPTION	2
II. **DESIGN OF WATER DISTRIBUTION SYSTEM**	2
A. DESIGN CRITERIA	2
B. DESIGN SPECIFICS	4
C. SUMMARY	5
IIII. **CONCLUSION**	5

EXHIBIT A ..... PUMP DATASHEETS

EXHIBIT B ..... DAILY FLOW

EXHIBIT C ..... FIRE FLOW

EXHIBIT D ..... HYDROPENUMATIC TANK

EXHIBIT E ..... WATER TREATMENT SYSTEM

EXHIBIT F ..... WATER DISTRIBUTION SYSTEM (CONSTRUCTION DRAWINGS)

EXHIBIT G ..... WATER QUALITY REPORTS

EXHIBIT H ..... MAIN STORGE TANK

Registered Professional Engineer (Civil)
CERTIFICATE NO.
37322
LUKE A.
SEFTON
Date Signed
ARIZONA U.S.A.

I GENERAL LOCATION & DESCRIPTION

A. PROJECT LOCATION

Mingus Panorama View Estates is located within the Town of Cornville, Yavapai County, Arizona. More specifically described as Assessors Parcel Number 407-33-051: S ½ of the SE ¼ of Section 35, Township 16 North, Range 4 East, Gila & Salt River Base & Meridian. The property is located southeast of Page Springs Road and to the north of Lee Pasture Road. The property will be accessed via Winter Sun Drive, a new access road off of Page Springs Road.

1. Project Owner/Developer: Clara Mak/Kurt Wuersch
   350 Shadow Rock Drive
   Sedona, Arizona 86336

2. Streets and Roadway: Public roadways (Proposed onsite)

B. PROJECT DESCRIPTION

The proposed development of Mingus Panorama View Estates encompasses 80 acres of land. The site is currently undeveloped with no existing paved roads or buildings. There are couple of primitive roads cut through the project site. The project area consists of approximately 60 percent vegetative cover consisting of mesquite, brush and grass. The general area consists of a SCS C type soil. There are no irrigation ditches or canals on this site. The area has moderately 2 to 3 percent grade slopes which transition from the northeast to the southwest. From the eastern property boundary 6-ft wide channel with approximately 2:1 side slopes meanders though the property before exiting the property on the western boundary. The site is currently undeveloped and zoned Single Family Residential (R1-35). A 69-lot residential subdivision development is planned for the site.

The subdivision will connect to the Mingus Panorama Estate Domestic Water Company System.

Mingus Panorama Estate Water company location and information:

Address: 350 Shadow Rock Drive, Sedona, Arizona 86336
Telephone: (928) 204-1288
Contacts: Clara Mak/Kurt Wuersch

II DESIGN OF WATER DISTRIBUTION SYSTEM

A. DESIGN CRITERIA

1. The water distribution system was designed in accordance with Arizona Administrative Code R18-5-502, Arizona Department of Environmental Quality Engineering Bulletin No. 10, Chapters 5 and 7 (Guidelines for the Construction of Water Systems).

2. ADEQ Bulletin No. 10 Chapter 7.C.2 states that "The normal working pressure in the distribution system should be approximately 75 psi and not less than 40 psi.... minimum pressure of 20 psi at ground level at all points in the distribution system under all conditions of flow. Maximum pressures of as much as 100 psi..."

3. Fire Flow at 500 g.p.m. shall be provided for one hour while maintaining a minimum of 20 psi at all outlets (ADEQ Bulleting No. 10 CH 1.R.3 and Fire Department requirements).

4. The pumps for the hydropneumatic tank will provide a minimum of 105 instantaneous demand flow for each of the 2 pumps.

5. All public water mains must maintain a 6-foot clearance horizontally and 2-feet vertically from all sewer main lines. Private lines and yard lines must maintain 1-foot vertically and horizontally from a sewer line per UPC code 609.2.

6. Six (6) inch lines shall be installed at a depth of between 3 to 4 feet below finish grade. Depth of the service lines/yard lines shall be at least 12 inches below finish grade per IPC code 306.3.

7. The minimum general service requirement shall be 100 gallons per capita per day.

8. Fire hydrants or Blow-off valves will be located at the end of pipe runs.

9. Fire hydrants shall be placed as directed by the fire marshals.

10. Gate valves, air release valves, blow-off valves, backflow preventers, and the fire main detector check valve are located as shown on the plans (Exhibit F).

11. Thrust blocking for the system will comply with MAG standard detail numbers 380 and 381.

12. The water delivered to consumers to meet the standard given in the drinking water regulations.

13. Water lines, chemical lines, waste lines and all other lines to be color coated as stipulated in ADEQ Bulletin No. 10 Chapter 4.

14. The public water supply well to be protected with a well head and a minimum of 100 ft clearance to be maintained to the nearest leach field.

15. Design of buildings to accommodate for adequate ventilation, lighting, heating, drainage.

B. DESIGN SPECIFICS

1. The service requirement is 69 lots x 3 people per lot x 100 gallons divided by 24 divided by 60 equals 14.38 gpm. A peak factor of 2 is used to accommodate the variances with different parts of the day.

2. Well pump is designed to be a 4" diameter Berkeley submersible pump or equivalent (Exhibit A). The 10 HP pump is capable of 50 gpm at a pumping depth of 550-650 ft.

3. Water treatment: The groundwater studies on 2/16/05 and the subsequent tests on 7/18/06 were checked against the requirements stipulated buy Title 18, ADEQ and the Drinking water source approval form, ADEQ (Refer exhibit G). Based on the water quality results, treatment shall be carried out to control all primary contaminants bellow the MCL. The treatment system (AdEdge Packaged system-APU-25LL-S-2-B) and a water softening unit are intended to treat water to be in accordance with drinking water specifications stipulated by AZDEQ for public water distribution system (Exhibit E).

4. The chlorination pump is intended to supply chlorine at 0.25 mg/l.

5. The main storage tank of 50,700 gallons, is required to hold the daily domestic requirement (20,700 gallons) and the fire requirement (30,000 gallons). Based on the availability, a water tank with a capacity of 51,300 gallons is proposed. Refer the construction drawings (Exhibit F) and Appendix H for details.

6. Due to installation of a hydropneumatic tanks the minimum instantaneous demand flows will be 129.7 gpm.

7. Hydropneumatic Tank (Exhibit D): Pressure will vary between 45 and 60 psi during normal operations. Tank size will be of the volume to allow the pumps to operate 2-6 times per hour for normal flow (2600 gal.).

8. The pressure system has been designed using three B2 ZPL 10 HP Berkeley Pumps or equivalent (Exhibit A). An alternating controller will be provided; the controller will have three circuits, one for each pump in the system. During high domestic demands one pump will operate and fire flow demands over 500 g.p.m all pumps will operate. The controller will also alternate the use of all pumps to ensure continual operation and maintenance of the pumps.

9. Pump one is designed to operate at a range of 48 to 60 p.s.i., and pump two will operate at a range of 55 to 60 p.s.i., and pump three will need to operate at a range 57 and 60 p.s.i as triggered by the hydropneumatic tank.

10. During normal operations, the pressure system will provide pressure to the distribution outlets between 46 psi. to 74 psi. (Exhibit B). During fire flow, the provided pressure will be between 37 psi. to 64 psi. (Exhibit C).

11. The on-site distribution system will consist of 6-inch DIP line. The on-site fire hydrants will be connected to the 6" main line by a 6-inch DIP line (Exhibit F).

C. SUMMARY

The water distribution system will consist of:

- Well pump (Berkeley 4", 10 hp submersible pump or equivalent) pumping water at 35-45 g.p.m.
- A water treatment system (AdEdge Packaged system-APU-25LL-S-2-B) treating 35-45 g.p.m of water in accordance with drinking water specifications stipulated by AZDEQ for public water distribution system. (Exhibit E).
- A chlorination pump to supply chlorine at a rate of 0.25 mg/l.
- A storage tank with a combine capacity of 51,300 gal.
- Three pressure pumps with 10 hp and 250 gpm.
- A pressure tank with a water capacity of 2600 gal, operation between 45-60 p.s.i. The total volume is estimated to be between 5000 to 5200 gal.
- 6 inch diameter line within the head work control system (Exhibit F)
- 6 inch diameter line for the site main distribution system (Exhibit F).
- Fire hydrants to be placed as stipulated by ADEQ Bulletin No. 10 and agreed upon by Mike Flummer, Assistant Chief, Verde Valley Fire District.

III CONCLUSION

The water distribution system when constructed to the details and specifications stipulated in this report shall be in accordance with Arizona Administrative Code R18-5-502, Arizona Department of Environmental Quality Engineering Bulletin No. 10, Chapters 5 and 7 (Guidelines for the Construction of Water Systems).

EXHIBIT A ..... PUMP DATASHEETS

EXHIBIT B ..... DAILY FLOW

EXHIBIT C ..... FIRE FLOW

EXHIBIT D ..... HYDROPENUMATIC TANK

EXHIBIT E ..... WATER TREATMENT SYSTEM

EXHIBIT F..... WATER DISTRIBUTION SYSTEM (CONSTRUCTION DRAWINGS)

EXHIBIT G ..... WATER QUALITY REPORTS

EXHIBIT H ..... MAIN STORGE TANK

EXHIBIT A PUMP DATASHEET

CURVE	4075
DATE	04-11-97
PAGE	3.01
SUPERSEDES	
Curve 4075	Page 3.01
Dated 05-01-96	

BERKELEY®

MOTOR DRIVE

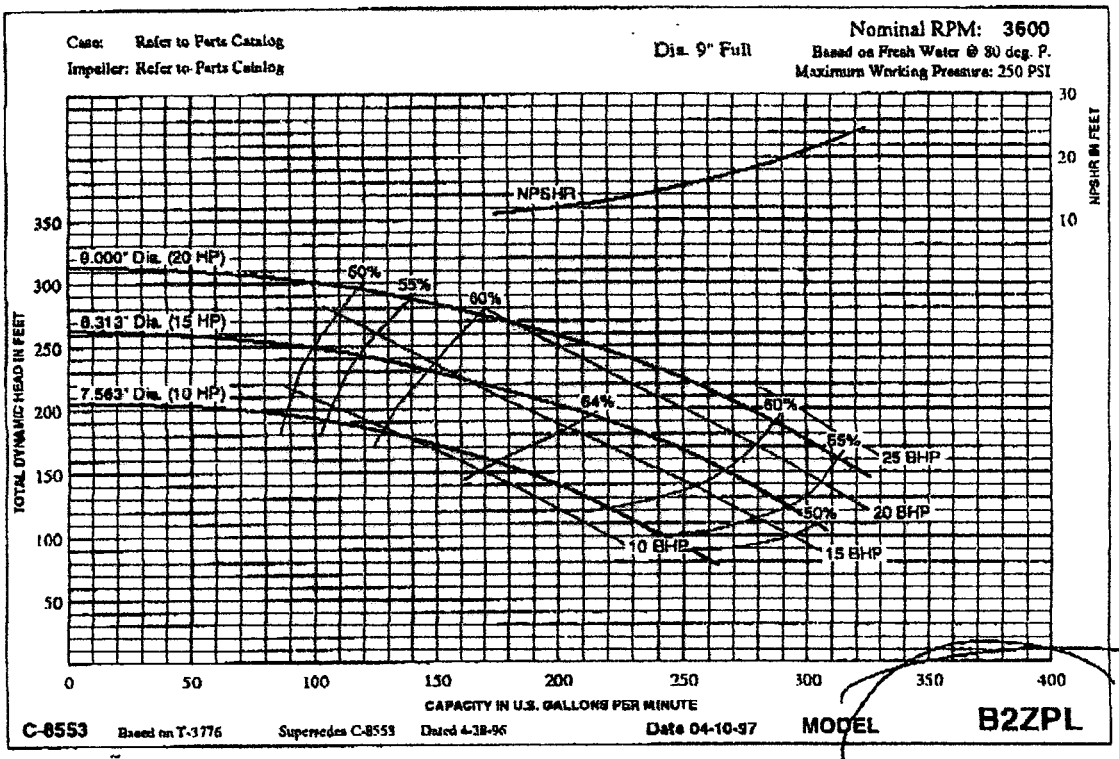

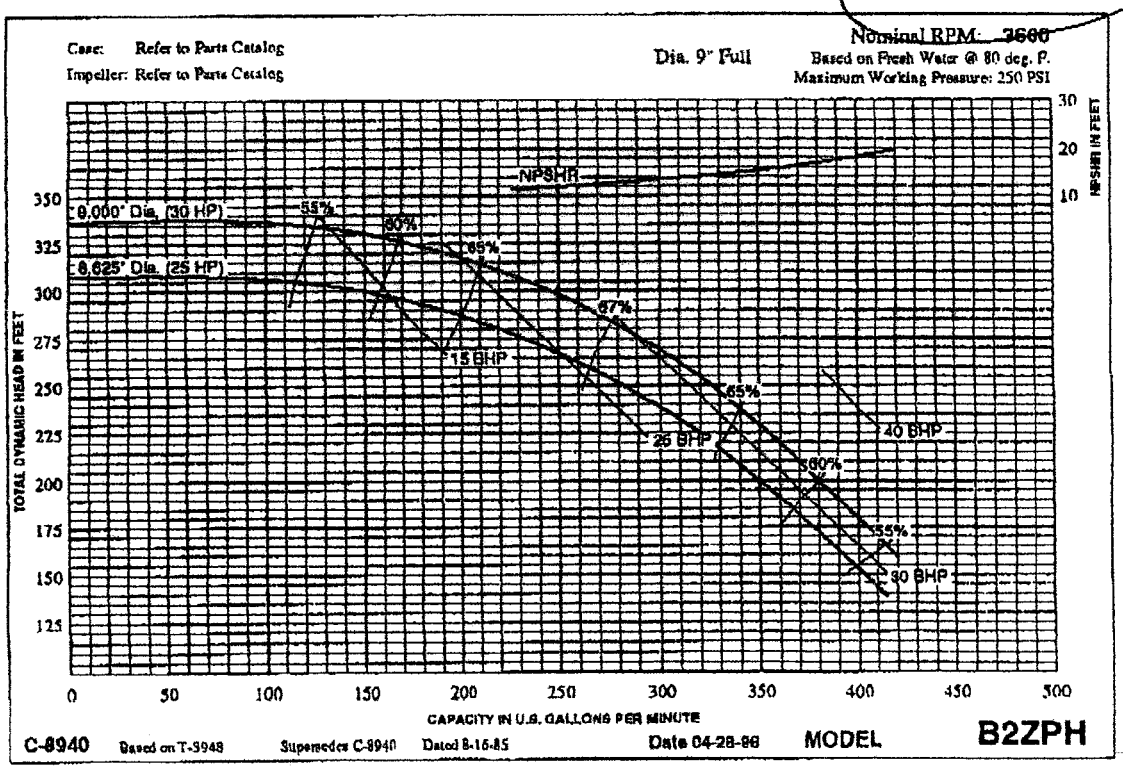

BERKELEY®

4" submersible pumps – 10, 15, 20, 30, and 50 gpm

PUMP PERFORMANCE *(Capacity in Gallons Per Minute)*

50 GALLONS PER MINUTE

		Pumping Depth in Feet																Shutoff Head	
HP	PSI	20	40	60	80	100	125	150	175	200	250	300	350	450	550	650	700	Feet	PSI
1-1/2	0	—	71.0	65.1	58.2	49.3	33.5											145	63
	20	63.5	55.9	46.5	32.5														
	30	54.8	45.0	30.0															
	40	43.3	26.9																
	50	21.9																	
	60																		
2	0	—	72.6	68.0	63.3	57.0	47.8	33.9										180	78
	20	66.5	62.2	55.1	46.8	37.1	13.0												
	30	61.1	53.6	46.0	34.3	14.1													
	40	52.8	45.0	32.5	11.0														
	50	42.7	27.9																
	60	25.2																	
3	0	—	75.5	71.5	68.0	64.5	59.4	52.5	45.0	33.8								235	102
	20	70.5	66.9	63.7	59.0	53.5	46.5	36.2	18.2										
	30	66.1	62.9	58.1	53.0	47.0	37.0	20.5											
	40	62.5	57.6	52.0	46.2	38.8	22.1												
	50	56.5	51.0	44.7	36.2	22.8													
	60	50.0	43.7	34.0	20.5														
5	0	—	—	75.8	73.9	71.1	68.9	65.9	63.2	59.9	51.9	41.9	22.5					385	166
	20	75.0	72.9	70.3	68.2	66.1	63.5	60.8	56.1	52.4	42.5	24.9							
	30	72.4	70.1	68.0	66.0	63.8	60.9	56.9	53.0	47.9	35.5	12.9							
	40	69.9	67.9	65.5	63.2	61.0	57.0	53.2	48.0	43.5	27.0								
	50	67.2	65.1	63.0	60.8	57.1	53.3	48.1	43.6	36.4	14.2								
	60	64.9	62.4	60.0	56.9	53.7	48.7	44.1	37.5	28.0									
7-1/2	0	—	—	—	—	75.2	73.5	71.3	69.8	68.0	66.0	61.0	55.3	43.1	20.0			595	257
	20	—	—	74.8	73.4	71.8	70.0	68.3	66.5	64.8	61.1	56.0	50.0	34.9					
	30	—	74.4	73.2	71.5	70.1	68.8	66.7	64.9	63.3	58.7	53.2	47.2	28.8					
	40	74.1	72.9	71.2	69.9	68.9	66.8	65.0	63.6	61.7	56.2	50.9	44.1	22.0					
	50	72.6	71.1	69.8	68.3	66.9	65.1	63.7	61.8	58.9	53.9	47.5	41.0	13.2					
	60	71.0	69.3	68.1	66.7	65.2	63.8	61.9	59.0	56.5	51.1	44.9	36.0						
10	0	—	—	—	—	—	75.3	73.8	72.2	70.8	67.9	65.0	62.1	54.2	44.7	29.0	15.2	745	322
	20	—	—	—	75.2	74.0	72.4	71.0	69.6	68.1	65.5	62.5	59.1	50.1	39.2	17.1			
	30	—	—	75.0	73.9	72.6	71.1	69.7	68.2	66.9	64.1	61.2	56.9	47.5	35.0	10.5			
	40	—	74.9	73.7	72.3	71.2	69.8	68.3	67.0	65.8	63.0	59.3	54.9	45.2	30.5				
	50	74.7	73.5	72.1	71.0	69.9	68.4	67.1	65.9	64.2	61.5	57.2	53.0	42.9	25.0				
	60	73.2	72.0	70.9	69.7	68.5	67.2	66.0	64.3	63.2	59.9	55.0	51.0	40.6	19.7				

CAUTION: DO NOT use pump at flow rates indicated by the symbol '—'. To do so can cause premature failure of unit. Pump warranty void when failure occurs under these conditions.

Tested and rated in accordance with Water Systems Council Standards.

NOTE: Pumps installed with a Pro-Source™ tank require a 100 PSI relief valve. Pumps installed with a conventional tank require a 75 PSI relief valve. Relief valve must be capable of relieving entire flow of pump at relief pressure.

4" submersible pumps – 10, 15, 20, 30, and 50 gpm

PUMP PERFORMANCE – 20 GPM

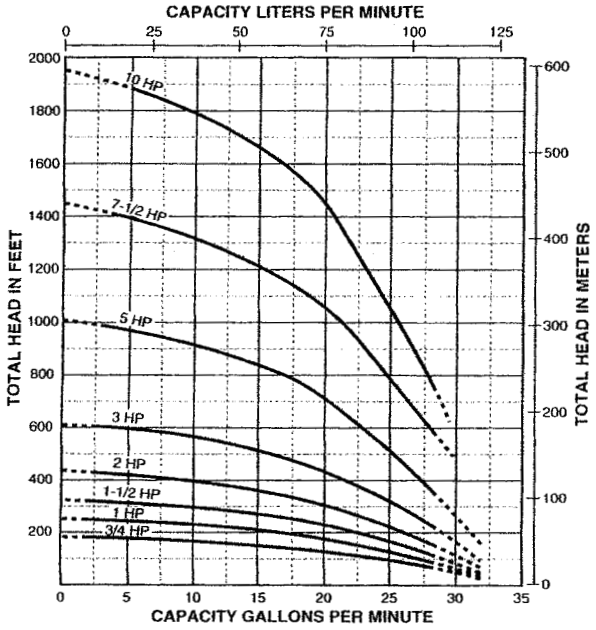

PUMP PERFORMANCE – 30 GPM

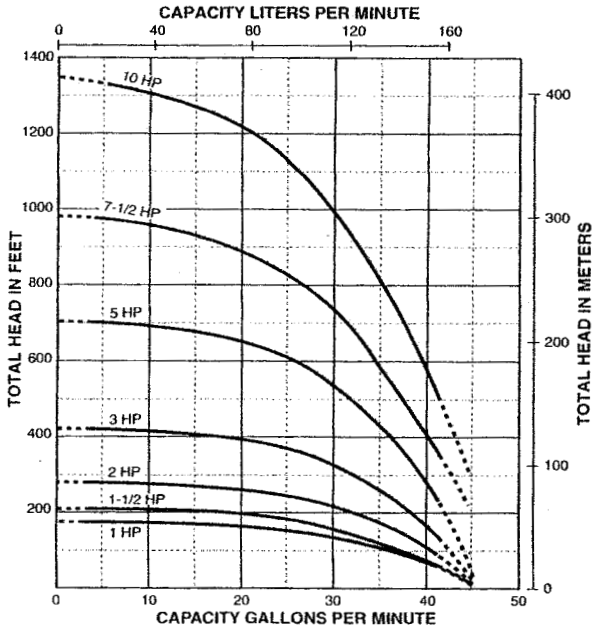

PUMP PERFORMANCE – 50 GPM

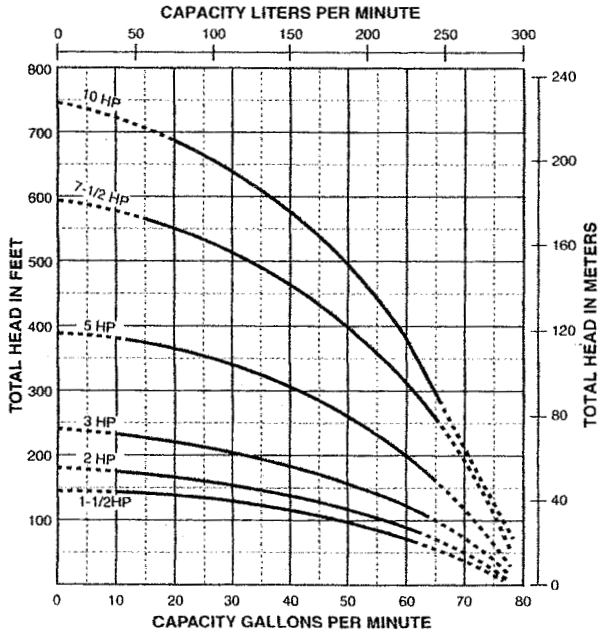

EXHIBIT B DAILY FLOW

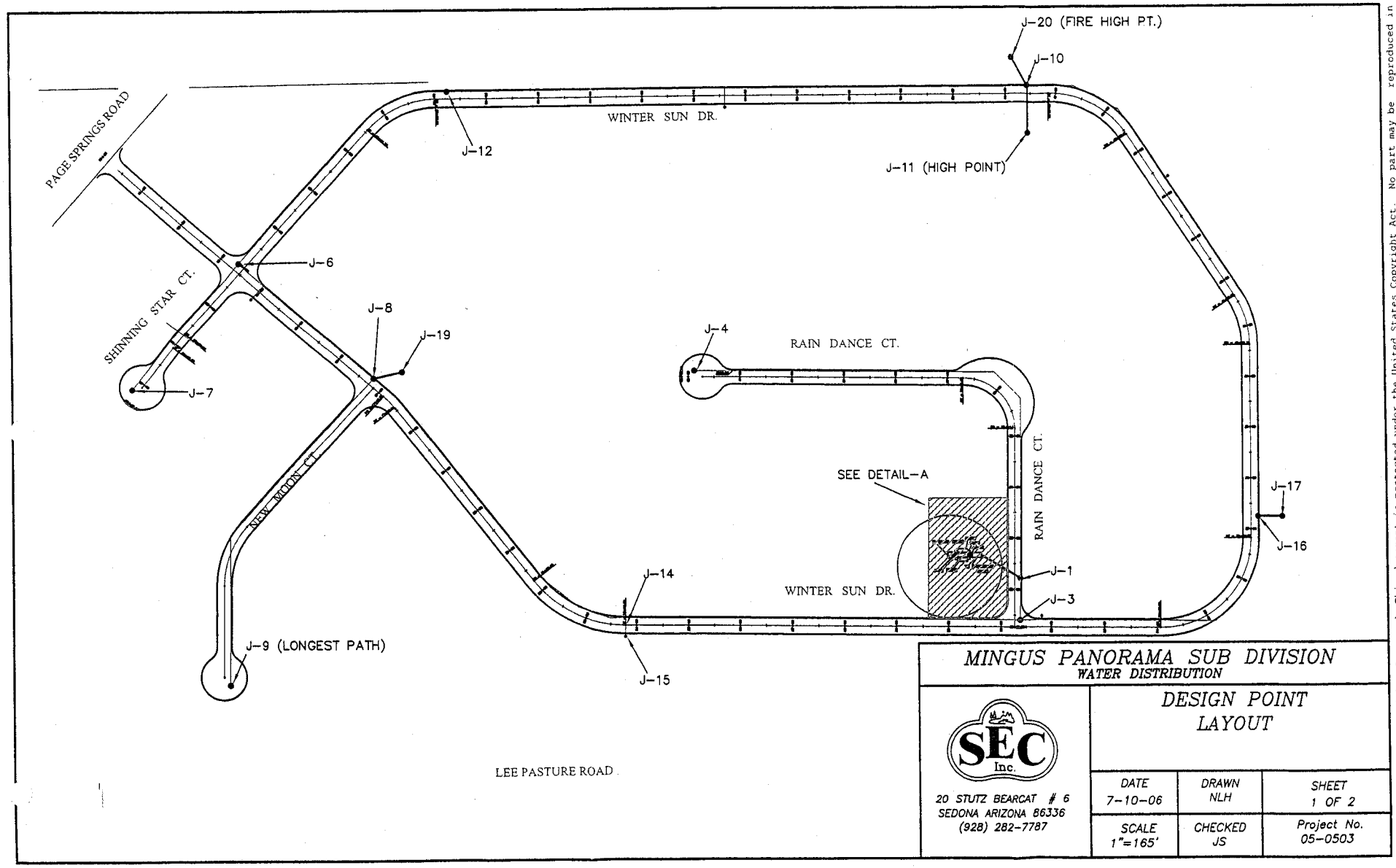

MINGUS PANORAMA SUB DIVISION

WATER DISTRIBUTION

SEC Inc.

20 STUTZ BEARCAT # 6
SEDONA ARIZONA 86336
(928) 282-7787

DESIGN POINT LAYOUT

DATE	DRAWN	SHEET
7-10-06	NLH	1 OF 2
SCALE	CHECKED	Project No.
1"=165'	JS	05-0503

© 2006, SEC, Inc., All Rights Reserved. This document is protected under the United States Copyright Act. No part may be reproduced in any form or by any means or stored in a database or retrieval system, without the prior written permission of SEC, Inc.

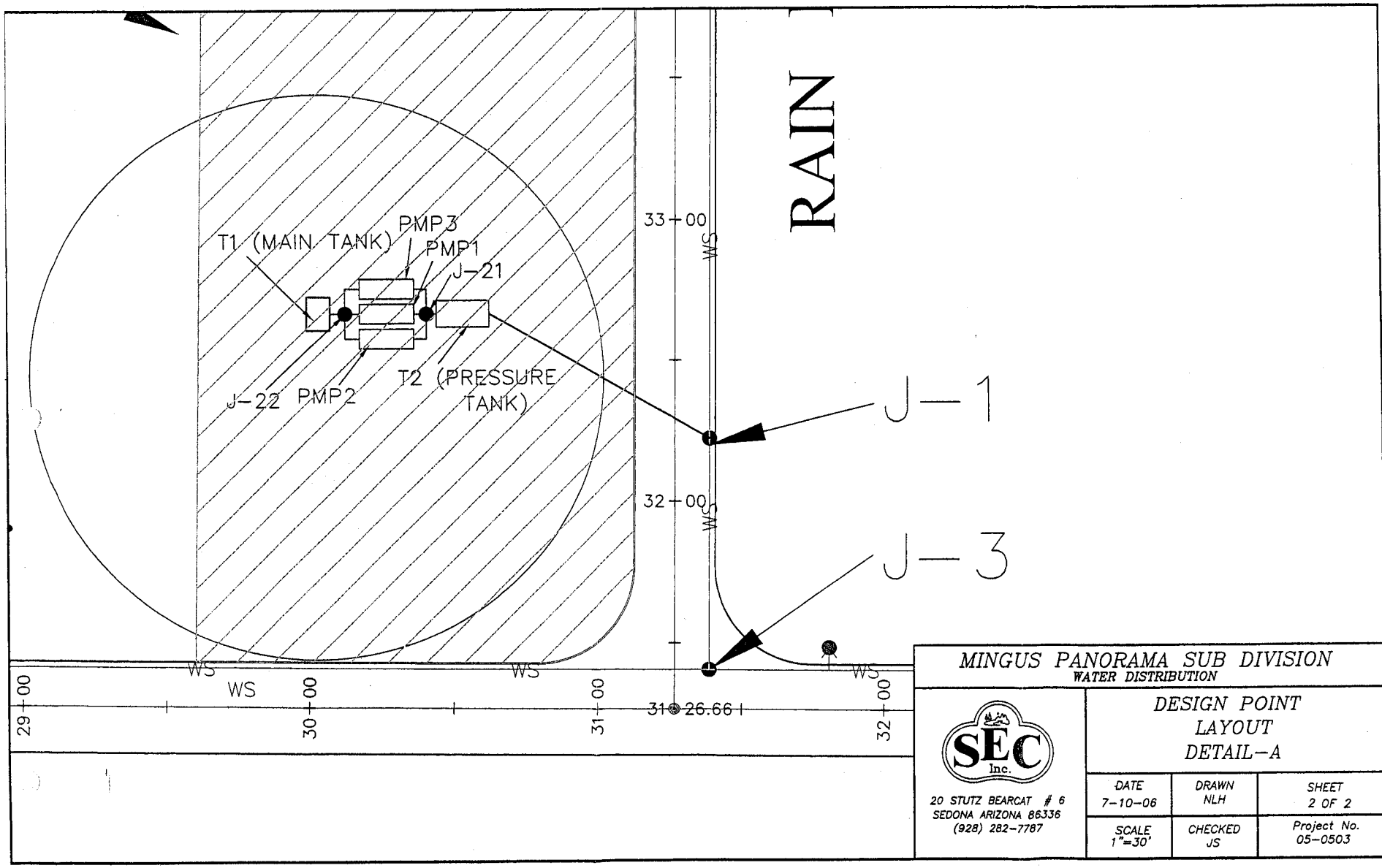

MINGUS PANORAMA SUB DIVISION
WATER DISTRIBUTION

SEC Inc.
20 STUTZ BEARCAT # 6
SEDONA ARIZONA 86336
(928) 282-7787

DESIGN POINT
LAYOUT
DETAIL-A

DATE	DRAWN	SHEET
7-10-06	NLH	2 OF 2
SCALE	CHECKED	Project No.
1"=30'	JS	05-0503

© 2006, SEC, Inc., All Rights Reserved. This document is protected under the United States Copyright Act. No part may be reproduced in any form or by any means or stored in a database or retrieval system, without the prior written permission of SEC, Inc.

Normal Flow
WaterCAD Junction Report

Normal Flow at 0.1hr

	Elevation (ft)	Base Flow	Demand (Calculated) (gpm)	Calculated Hydraulic Grade (ft)	Pressure (psi)
J-1	3,508.00	-	-	3,625.00	50.62
J-3	3,506.00	-	-	3,624.99	51.48
J-4	3,500.00	5.00	5.00	3,624.99	54.08
J-6	3,480.00	-	-	3,624.97	62.72
J-7	3,470.00	2.50	2.50	3,624.97	67.05
J-8	3,481.00	-	-	3,624.97	62.29
J-9 (Longest distance)	3,470.00	3.75	3.75	3,624.97	67.05
J-10	3,518.00	-	-	3,624.97	46.28
J-11 (High point)	3,518.00	5.00	5.00	3,624.93	46.27
J-12	3,490.00	-	-	3,624.97	58.40
J-14	3,488.00	-	-	3,624.97	59.26
J-15	3,488.00	5.90	5.90	3,624.92	59.24
J-16	3,518.00	-	-	3,624.98	46.28
J-17	3,518.00	2.00	2.00	3,624.97	46.28
J-19	3,481.00	-	-	3,624.97	62.29
J-20 (Fire High pt)	3,518.00	-	-	3,624.97	46.28
J-21	3,508.00	-	-	3,625.90	51.01
J-22	3,508.00	-	-	3,520.33	5.34

Normal Flow at 2 hrs

	Elevation (ft)	Base Flow	Demand (Calculated) (gpm)	Calculated Hydraulic Grade (ft)	Pressure (psi)
J-1	3,508.00	-	-	3,642.96	58.39
J-3	3,506.00	-	-	3,642.95	59.25
J-4	3,500.00	5.00	5.00	3,642.95	61.85
J-6	3,480.00	-	-	3,642.93	70.49
J-7	3,470.00	2.50	2.50	3,642.93	74.82
J-8	3,481.00	-	-	3,642.93	70.06
J-9 (Longest distance)	3,470.00	3.75	3.75	3,642.93	74.82
J-10	3,518.00	-	-	3,642.93	54.05
J-11 (High point)	3,518.00	5.00	5.00	3,642.90	54.04
J-12	3,490.00	-	-	3,642.93	66.17
J-14	3,488.00	-	-	3,642.94	67.03
J-15	3,488.00	5.90	5.90	3,642.88	67.01
J-16	3,518.00	-	-	3,642.94	54.06
J-17	3,518.00	2.00	2.00	3,642.94	54.05
J-19	3,481.00	-	-	3,642.93	70.06
J-20 (Fire High pt)	3,518.00	-	-	3,642.93	54.05
J-21	3,508.00	-	-	3,642.96	58.39
J-22	3,508.00	-	-	3,520.93	5.59

Normal Flow
WaterCAD Junction Report

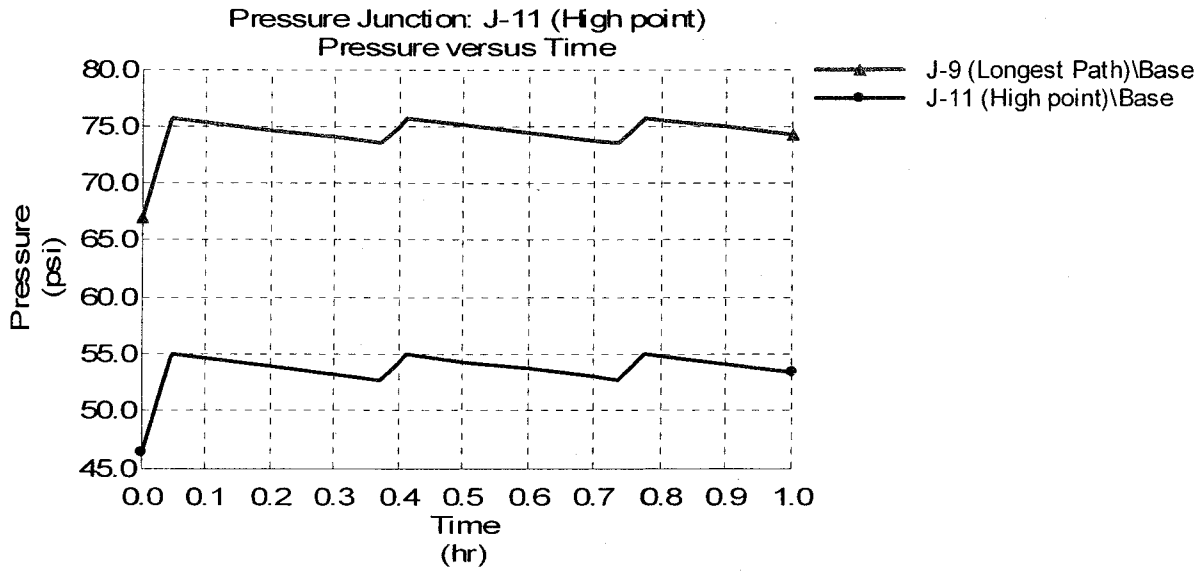

Normal Flow
WaterCAD Junction Report

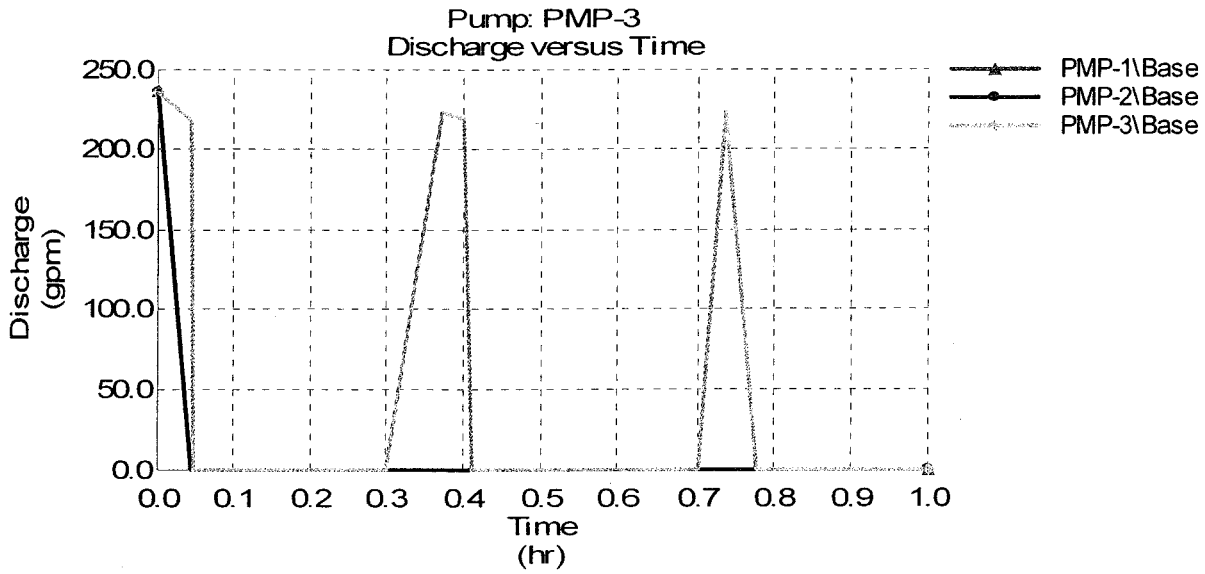

Graph

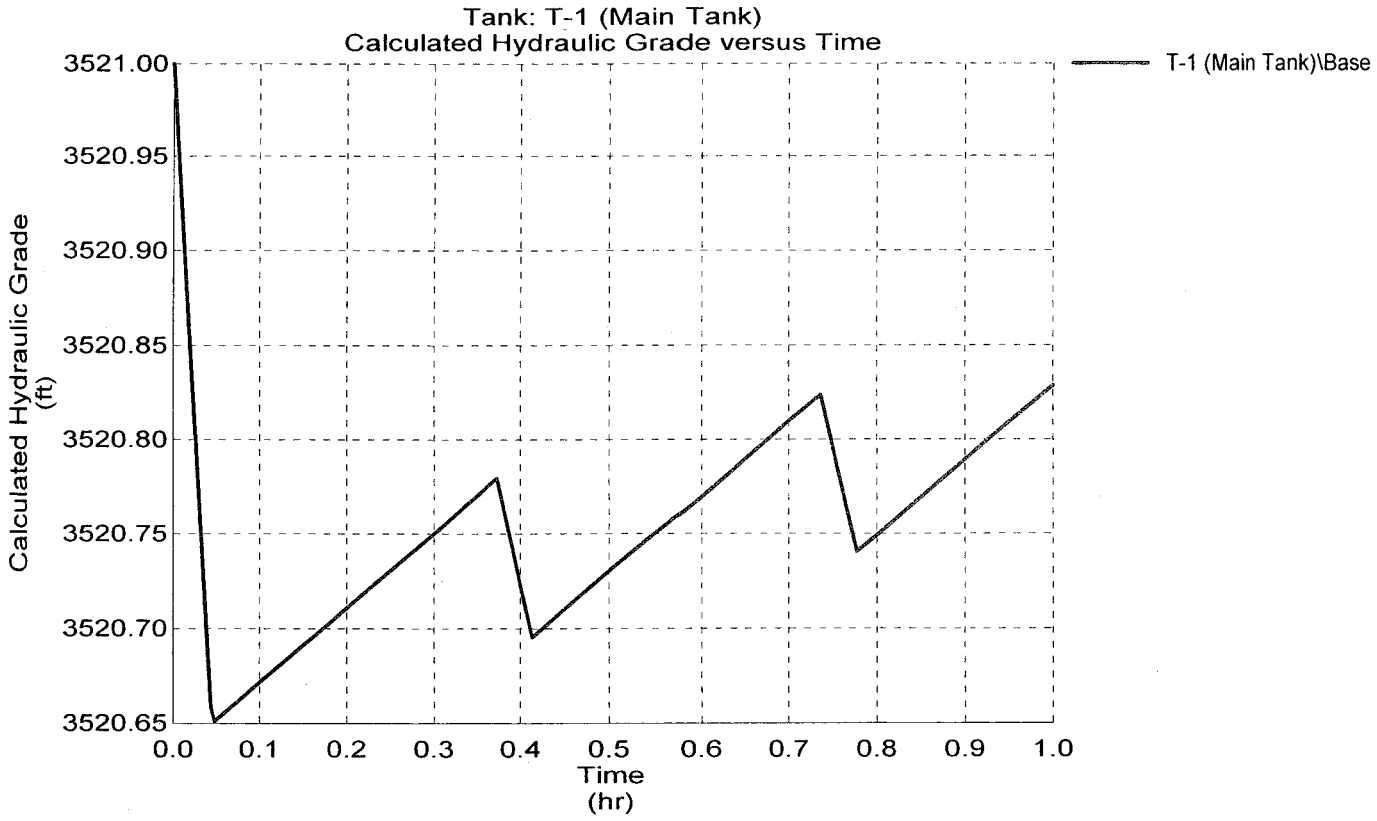
Tank: T-1 (Main Tank)
Calculated Hydraulic Grade versus Time
T-1 (Main Tank)\Base
Calculated Hydraulic Grade (ft)
3521.00
3520.95
3520.90
3520.85
3520.80
3520.75
3520.70
3520.65
0.0
0.1
0.2
0.3
0.4
0.5
0.6
0.7
0.8
0.9
1.0
Time (hr)

Graph

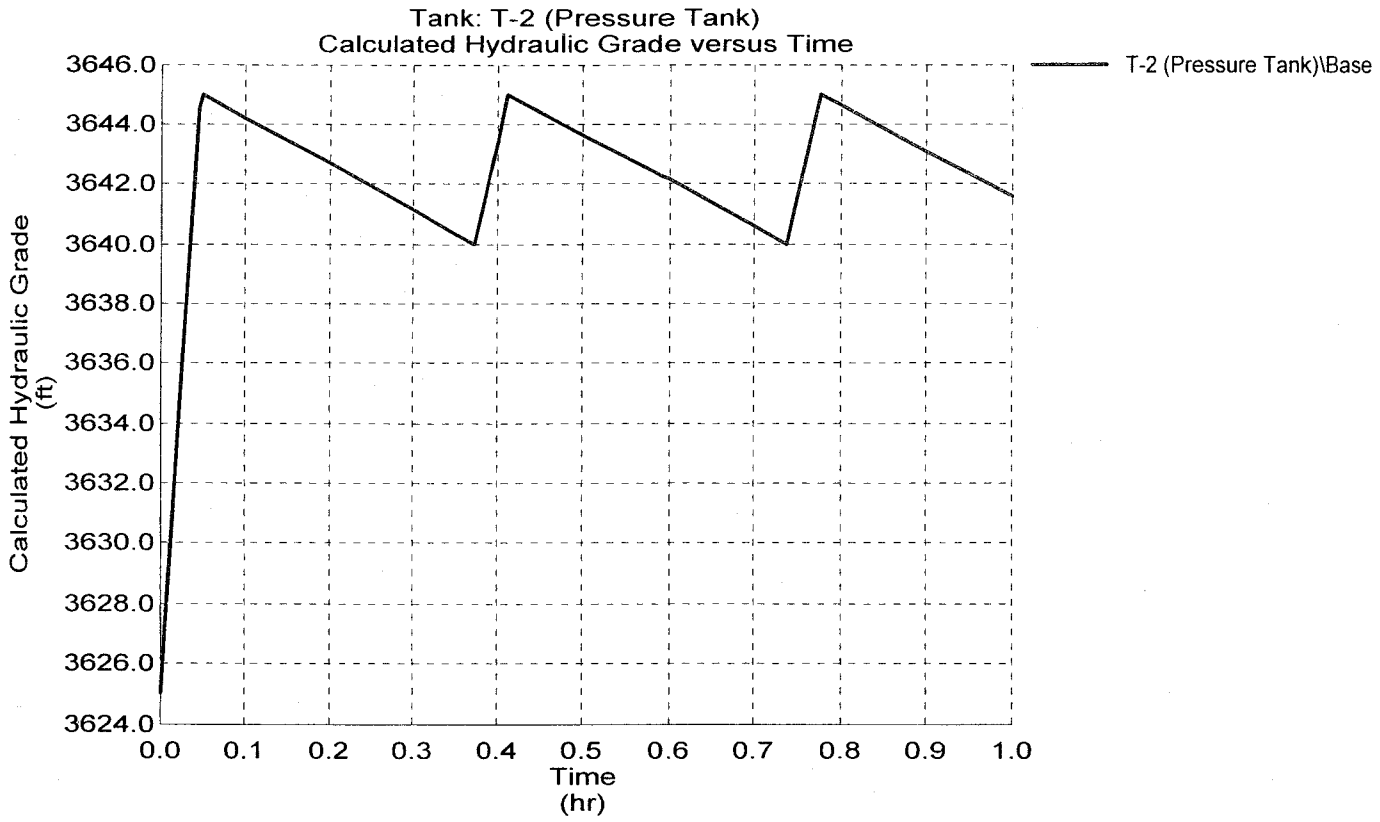
Tank: T-2 (Pressure Tank)
Calculated Hydraulic Grade versus Time
T-2 (Pressure Tank)\Base
Calculated Hydraulic Grade (ft)
3646.0
3644.0
3642.0
3640.0
3638.0
3636.0
3634.0
3632.0
3630.0
3628.0
3626.0
3624.0
0.0
0.1
0.2
0.3
0.4
0.5
0.6
0.7
0.8
0.9
1.0
Time (hr)

EXHIBIT C FIRE FLOW

Fire Flow
WaterCAD JUnction Report

0 Hrs

	Elevation (ft)	Base Flow	Demand (Calculated) (gpm)	Calculated Hydraulic Grade (ft)	Pressure (psi)
J-1	3,508.00	-	-	3,623.79	50.10
J-3	3,506.00	-	-	3,619.08	48.92
J-4	3,500.00	5.00	5.00	3,623.79	53.56
J-6	3,480.00	-	-	3,611.80	57.03
J-7	3,470.00	2.50	2.50	3,611.80	61.35
J-8	3,481.00	-	-	3,613.13	57.17
J-9 (Longest path)	3,470.00	3.75	3.75	3,613.13	61.93
J-10	3,518.00	-	-	3,605.21	37.73
J-11 (Hugh point)	3,518.00	5.00	5.00	3,605.17	37.72
J-12	3,490.00	-	-	3,609.97	51.91
J-14	3,488.00	-	-	3,616.01	55.38
J-15	3,488.00	5.90	5.90	3,615.96	55.36
J-16	3,518.00	-	-	3,614.18	41.61
J-17	3,518.00	2.00	2.00	3,614.18	41.61
J-19	3,481.00	-	-	3,613.13	57.17
J-20 (Fire Hydrant)	3,518.00	500.00	500.00	3,604.86	37.58
J-21	3,508.00	-	-	3,625.90	51.01
J-22	3,508.00	-	-	3,520.33	5.34

1 Hr

	Elevation (ft)	Base Flow	Demand (Calculated) (gpm)	Calculated Hydraulic Grade (ft)	Pressure (psi)
J-1	3,508.00	-	-	3,629.10	52.40
J-3	3,506.00	-	-	3,624.39	51.22
J-4	3,500.00	5.00	5.00	3,629.10	55.86
J-6	3,480.00	-	-	3,617.12	59.32
J-7	3,470.00	2.50	2.50	3,617.12	63.65
J-8	3,481.00	-	-	3,618.45	59.47
J-9 (Longest path)	3,470.00	3.75	3.75	3,618.44	64.23
J-10	3,518.00	-	-	3,610.53	40.03
J-11 (Hugh point)	3,518.00	5.00	5.00	3,610.49	40.01
J-12	3,490.00	-	-	3,615.28	54.20
J-14	3,488.00	-	-	3,621.32	57.68
J-15	3,488.00	5.90	5.90	3,621.27	57.66
J-16	3,518.00	-	-	3,619.50	43.91
J-17	3,518.00	2.00	2.00	3,619.49	43.91
J-19	3,481.00	-	-	3,618.45	59.47
J-20 (Fire Hydrant)	3,518.00	500.00	500.00	3,610.18	39.88
J-21	3,508.00	-	-	3,631.17	53.29
J-22	3,508.00	-	-	3,519.40	4.93

Fire Flow
WaterCAD JUnction Report

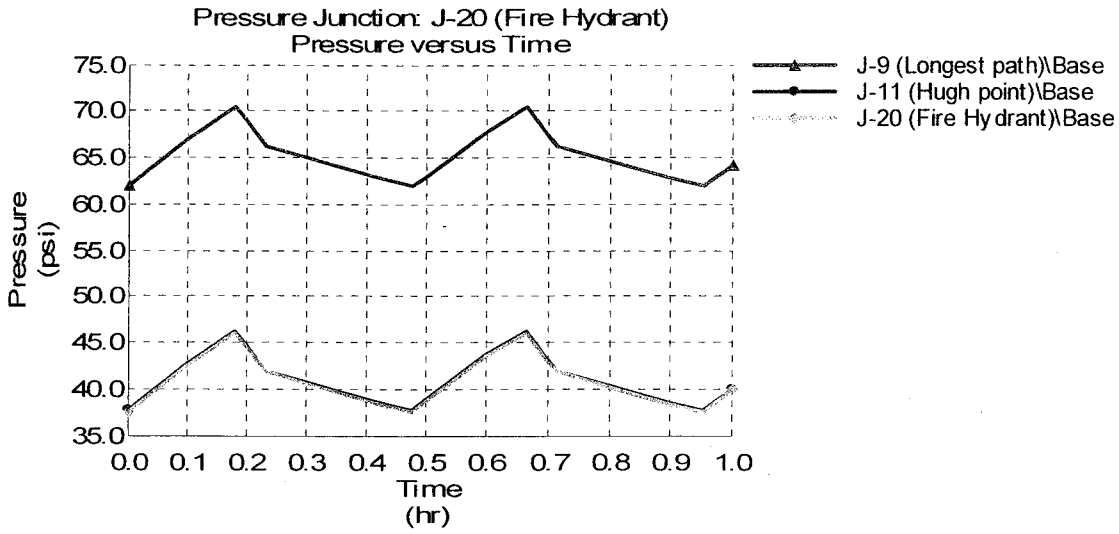

Graph

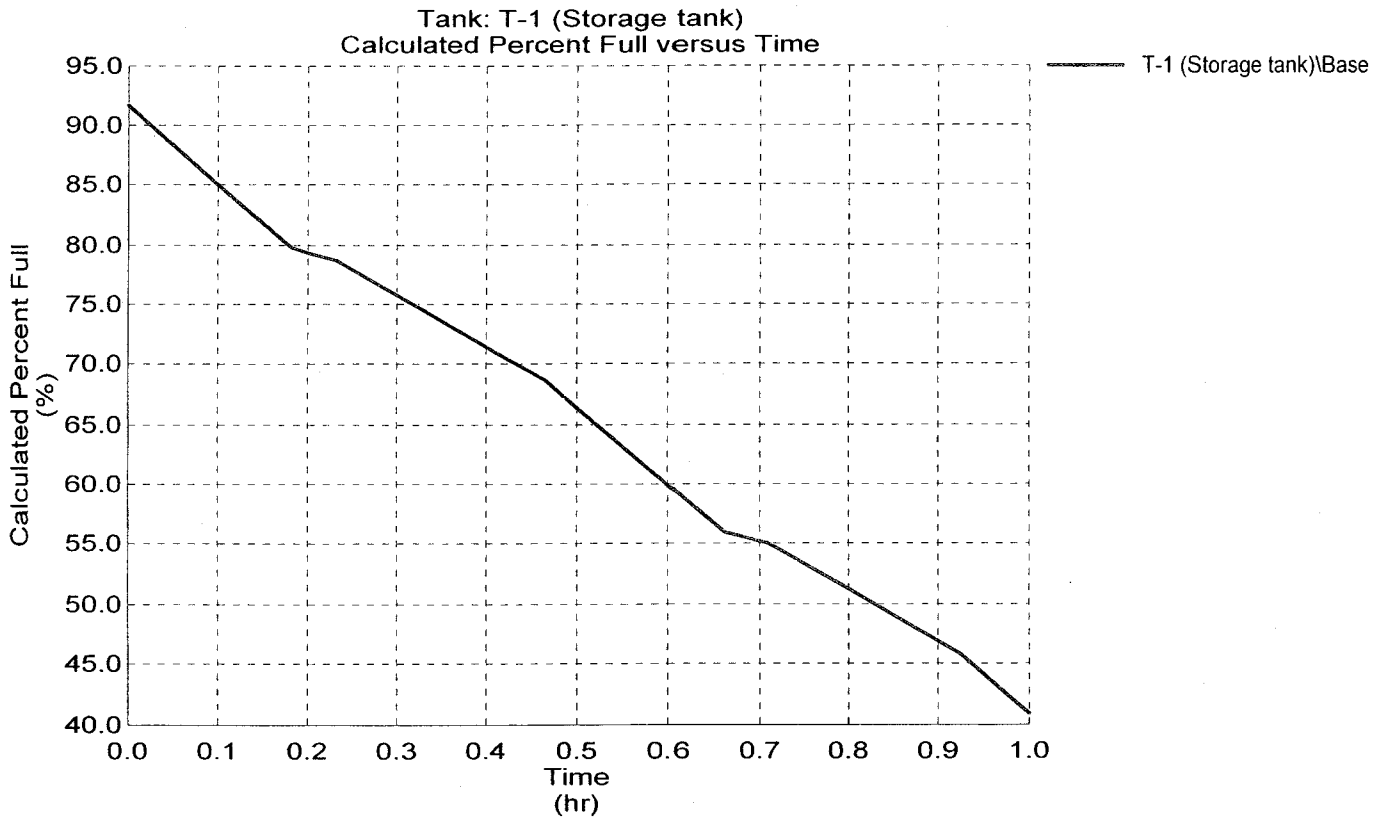
Tank: T-1 (Storage tank)
Calculated Percent Full versus Time
T-1 (Storage tank)\Base
Calculated Percent Full (%)
95.0
90.0
85.0
80.0
75.0
70.0
65.0
60.0
55.0
50.0
45.0
40.0
0.0
0.1
0.2
0.3
0.4
0.5
0.6
0.7
0.8
0.9
1.0
Time (hr)

Graph

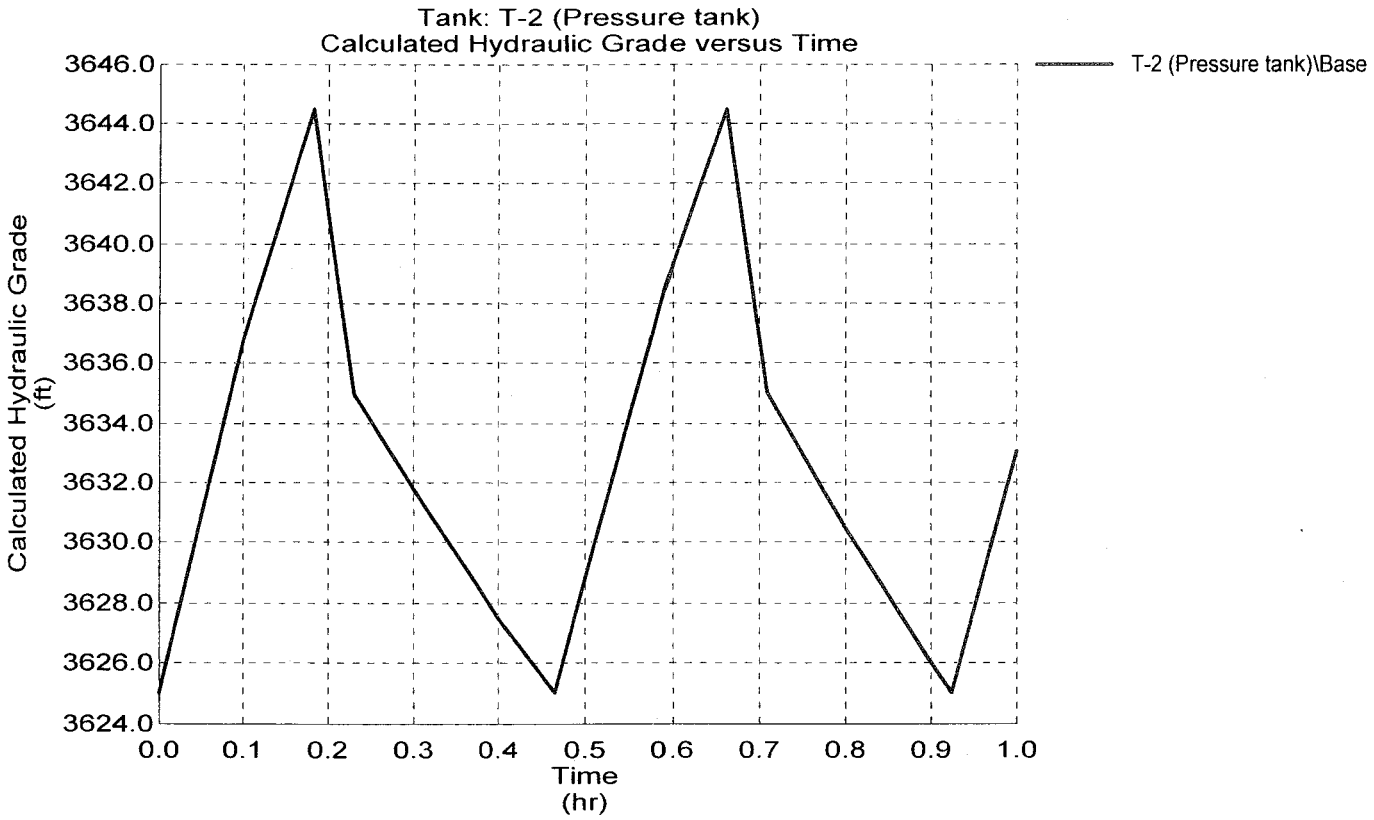
Tank: T-2 (Pressure tank)
Calculated Hydraulic Grade versus Time
T-2 (Pressure tank)\Base
Calculated Hydraulic Grade (ft)
3646.0
3644.0
3642.0
3640.0
3638.0
3636.0
3634.0
3632.0
3630.0
3628.0
3626.0
3624.0
0.0
0.1
0.2
0.3
0.4
0.5
0.6
0.7
0.8
0.9
1.0
Time (hr)

EXHIBIT D HYDROPENUMATIC TANK

COLLINGWOOD PUMPS, INC.

2641 VILLAGE DR./P O BOX 1873
COTTONWOOD, AZ 86326
(928) 646-7398
RESIDENTIAL & COMMERCIAL WATER SYSTEMS
PUMP SALES & SERVICE
WATER ANALYSIS & TREATMENT
ROC# 143332

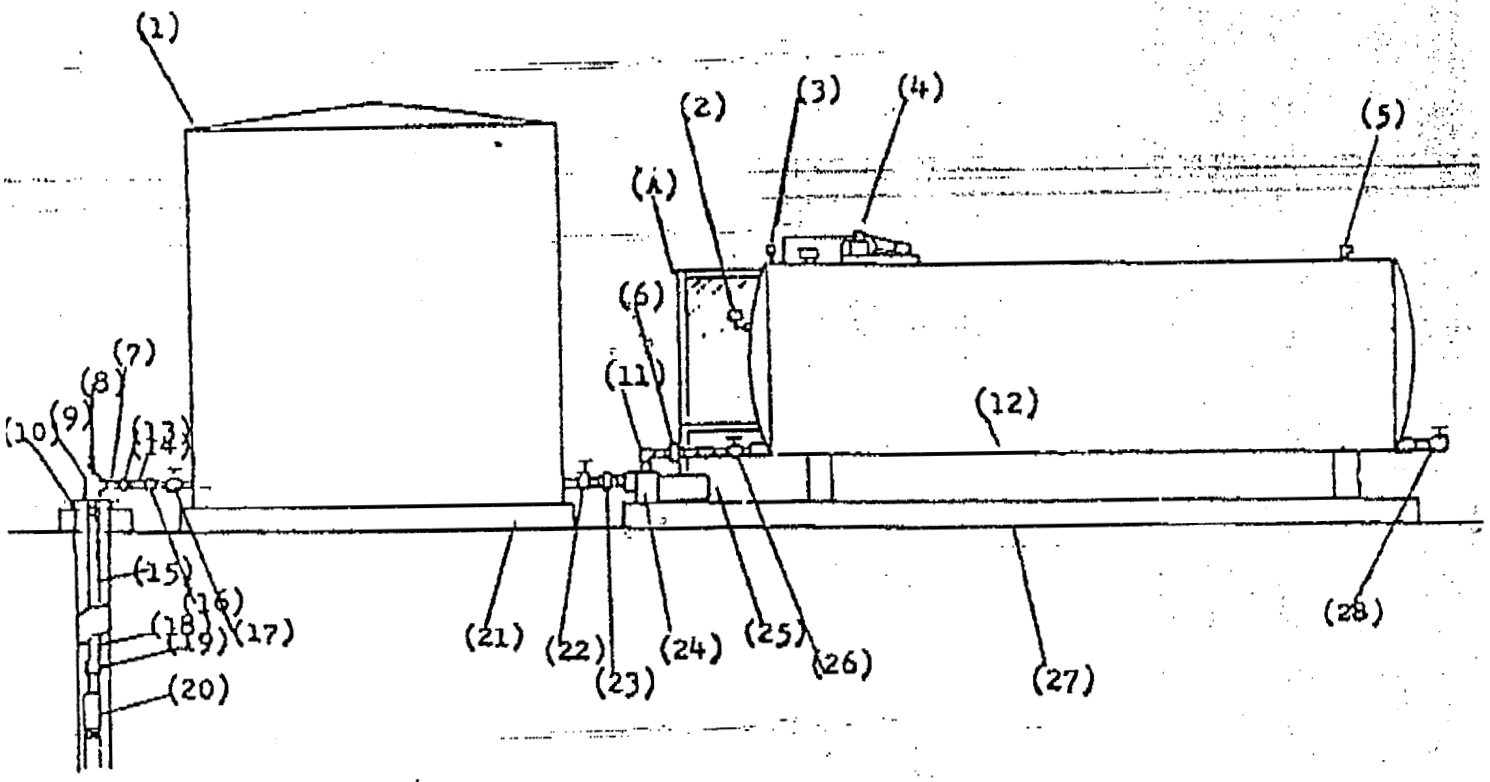

1. Storage Tank
2. Press. Sw. Controls
3. 0-100 Press. Guage
4. 1/2 HP Air Compressor Kit
5. 3/4-75 PSI Press. Relief Valve
6. Union
7. Nipple
8. Pipe Plug
9. Tee
10. Well Seal
11. Elbow
12. Pressure Tank
13. Union
14. Nipple
15. Drop Pipe
16. Check Valve
17. Gate Valve
18. Drop Pipe
19. Check Valve
20. Submersible Pump
21. Gravel Ring & Gravel
22. Gate Valve
23. Union
24. Booster Pump
25. Pump Motor
26. Gate Valve
27. Cement Slab
28. Discharge Valve to Service Line
29. Tank Vent
30. Electrod J. Box
31. Tank Over Flow (screened)
32. Well Pump Electrods
33. Booster Pump Electrods
34. Well Vent
A. Electrical Panel
35. Stainless Steel Electrods

DATE

JOB NO

CASHION TANK & STEEL CO.

SPECIALIZING IN WATER TANK CONSTRUCTION

AZ. LICENSE. #075820
CA. LICENSE. #317993A

P.O. BOX 306
CASHION, AZ 85329
PHONE #623-932-3380
FAX (623) 932-1116

PRESSURE TANKS

70 PSI WORKING PRESSURE

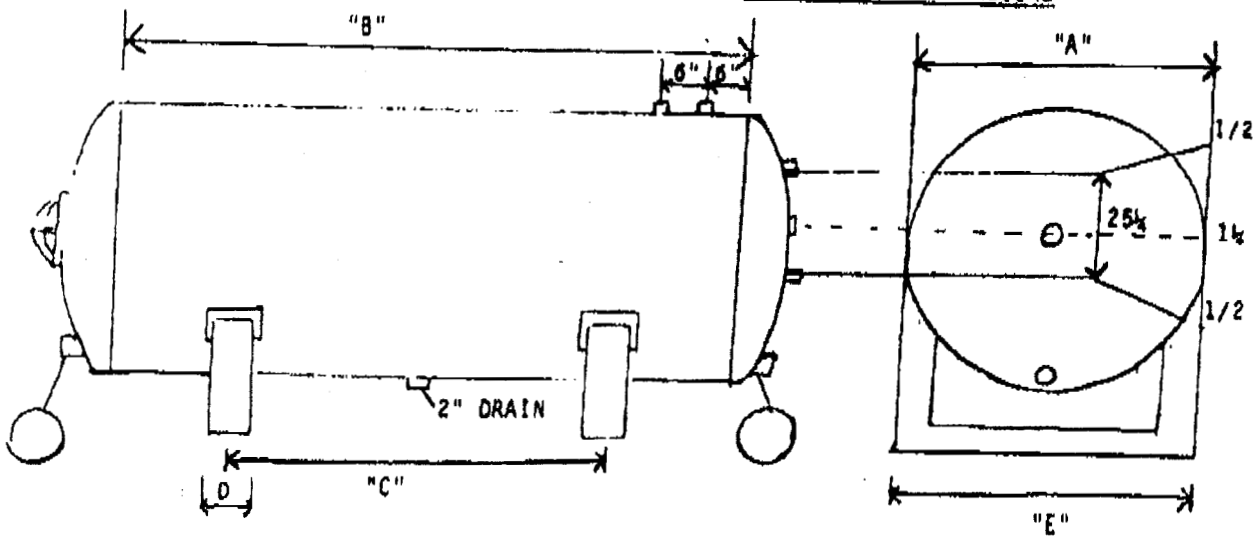

PSI	GALLONS	SHELL	HEAD	A	B	C	D	E	WEIGHT	PRICE
70	350	3/16	1/4	36"	6'	4'	4"	32"	700#	
70	500	3/16	1/4	42"	6'	4'	4"	34"	880	
70	1000	3/16	1/4	54"	8'	6'	5"	46"	1400	
70	1500	3/16	1/4	54"	12'	8'	6"	46"	1850	
70	2000	3/16	1/4	54"	16'	10'	6"	46"	2250	
70	2500	3/16	1/4	54"	20'	12'	6"	46"	2700	
70	3000	1/4	1/4	60"	20'	12'	8"	52"	4100	
70	5000	1/4	5/16	72"	22'	14'	10"	60"	5500	

MANWAY

FITTINGS-SPECIAL

PAINT INSIDE

COLOR OUTSIDE

DELIVER

EXHIBIT E WATER TREATMENT SYSTEM

adedge

Manage the Elements

Design Report

APU-25LL Arsenic Treatment System
Mingus Panorama Site
Cornville, Arizona

Prepared for:

Mingus Panorama Domestic Water System
Cornville, Arizona

Prepared by:

Adedge Technologies, Inc
5152 Belle Wood Court, Suite A
Buford, Georgia 30518
678-835-0052 678-835-0057 fax
www.adedgetechnologies.com

July 2006

2.0 SYSTEM SPECIFICATIONS AND DESIGN BASIS

2.1 Overview

Adedge has provided a Model APU-25LL-S-2-B (i.e., adsorption package unit capable of treating up to 25 gpm) to treat the Mingus Panorama water supply. The following table presents the system specifications.

Parameter	APU-25LL-S-2-B
Adedge System Model #	APU-25LL-S-2-B System
Design (Maximum) Flow	25 gpm
Average Flow	20 gpm
Empty Bed Contact Time (EBCT)	5.4 minutes at average flow
Adsorption Vessels	Two 30-inch diameter per system; 6-inch flanged connection; top mount
Media/quantity	E33P/12 cu ft per vessel
Packaged system	Yes: skid mounted, pre-piped
Skid and panel	Stainless steel skid Panel: NEMA 4x enclosure Flow meter/totalizer for each vessel Differential pressure gauges Optional ON/OFF selector switch to energize system Optional backwashing indicator lights Optional manual backwashing selector switch (optional)
Controls	Fleck 3150 automatic controllers, top-mounted each vessel with 3200NT timer;
Feed pump/well/source water delivery	By others; provided by site per system requirements
Header line size from well at tie in point	2.0-inch Schedule 80 PVC
System piping materials	Schedule 80 PVC
Main pipe header size (Schedule 80 PVC)	2.0-inch; flanged connection
Treated water line	2.0-inch; flanged connection
Tank piping size (Schedule 80 PVC)	2.0-inch
Sample ball valves	Three stainless steel sample valves on panel, one on treated water outlet line
Feedwater strainer size	N/A
Controller auto valve size	2.0-inch Fleck 3150 controller with 3200NT
Drain line (backwash)	2.0-inch; flanged connection
Backwash flow rate (approximate)	Up to 44 gpm per vessel
Normal service flow restriction	25 gpm max design flow; manual diaphragm valves for

2.3 Process Controller

The process controller for the APU is a Fleck Model 3150 2.0-inch control valve. A Fleck controller is utilized for each vessel (CV-101A and CV-101B) in the APU to operate independently. Each valve utilizes a 3200NT timer for electronic programming, which allows setting custom parameters such as backwashing frequency, external notifications for alarm conditions, and accommodating other inputs and outputs.

2.4 Process Vessels and Internal Components

The Mingus Panorama APU-25LL vessels will consist of two 30-inch diameter by 72-inch tall composite tanks, each accommodating up to a maximum of 12 cubic feet of E33 media. The vessels have a 6-inch flanged connection the top of the vessel for loading media and accessing the tank internals. The flow enters the system through a 2-inch diameter header and the water flows in series through the lead vessel and then through the lag vessel. Water in each vessel flows from the upper distributor downward through the media and the treated water is collected in the bottom through a Schedule 80 PVC slotted hub and lateral assembly.

2.5 Flow Meter, Flow Totalizer, and Differential Pressure Gauges

The system is equipped with a flow sensor to measure instantaneous flow and total gallons treated. Since this is a series system, the flow across both vessels will be equal. The flow sensor is located on the inlet side of the piping and consists of a Seametrics Model EX80 series electromagnetic devices mounted in-line. Instantaneous and total flow can be monitored at any time viewing the flow indicator on the control panel. System operators can also monitor other key parameters in order track total treated gallons to predict media life. Cut sheets and technical information for these components are contained in the O&M manual. The cut sheet and service manual present flow meter specifications, technical features, installation and electrical connections, programming, troubleshooting, and additional information.

In addition to the flow sensors, each vessel is equipped with differential pressure gauges to measure differential pressure across each adsorption vessel. The APUs also have differential pressure switches which can send a signal to activate an automated backwash, or with some APU models provide other outputs such as notification of alarm conditions through a relay or the PLC. At startup, the differential pressure across the vessels should

vessel. Backwash water is available from the hydropneumatic tanks and used on demand when a backwash cycle is required.

In addition to the timed backwash described above, each vessel has a differential pressure switch. Default differential pressure settings for these units are 10 psi for activating an automatic backwash. In the event that one or both of the vessels experience a high differential pressure reading on PDIS-173A or on PDIS-173B before the designated set time, the high differential pressure conditions will send a signal to the respective valve to activate a backwashing event for that particular vessel. Backwashing can commence immediately or can be delayed to a low use period of the day (typically 2:00 am).

The table below shows the programmed (default) settings for the NT3200 timer/controller. Site specific program settings can be performed at the startup by Adedge personnel. For more detail on the programming, refer to the O&M manual.

NT3200 Timer Settings for Control Valves

To enter into Programming Mode:
Use up/down arrows to set time to 12:01PM
Hold down up/down arrows for five seconds
Input valves below, advance to next level by pressing the recycle button
Use up and down arrows to set to a new value

Setting	Comments
3150	Valve type is model specific*
dF	Downflow operation (normal mode for arsenic filters)
4f1	System type; series, time clock delayed
rS-1	Remote signal from differential pressure switches; 1 minute delay
2:00am	Default time for backwash; time of day can be changed
A--30	# set for 30 days between backwashing events
1--15	# set for minutes of upflow backwash
2--0	# set for minutes of downflow slow rinse (goes to drain)
3--3	# set for minutes of downflow fast rinse (goes to drain)
4OFF	cycle 4 set to OFF; not used
5OFF	Cycle 5 set to OFF; not used
S--0	Auxillary relay to open BW supplement valve = no delay; default setting is OFF where BW supplement line not used
E--18	# set for minutes of total BW cycle time (steps 1, 3 above)
LF60	Line frequency (electrical default)
Time	Clock to be displayed at the end of program setup

System should now be ready to receive flow. **Note**: Certain flow and isolation valves are manual on this system and must be set properly by AdEdge or trained personnel at the time of startup. These valve positions once set, should remain to avoid system imbalance or exceeding design criteria. The system is designed to handle a maximum of 25 gpm flow

Manual Backwashing

Another way to manually backwash either unit is to open the cover on the NT3200 valve and depress the "recycle" button on the front of the display for 3 seconds. This will activate a full backwash cycle unless terminated. The current cycle can be advanced to the next cycle by simply depressing the "recycle" button once or to the service mode by pressing once again. The clock display should appear when the valve is in the service mode.

The backwash start signal has to be valid for one minute before the timer starts the backwash. Upon activation of backwashing, the associated pilot light on the control panel will light until the cycle is completed. The default setting backwash cycle lasts approximately 15 to 18 minutes before returning to normal service flow. The pilot light turns off when the high differential pressure signal disappears (if applicable) and the clock will be displayed on the front of each timer (normal service mode).

Integration with other components of the system

For this particular installation, there are no provisions incorporated electrically or otherwise that integrate other treatment components into this APU.

Typical Operating Conditions Expected for System:

APU-25-S-2-B System

Inlet Pressure:	PI-101	~ 50 to 60 psi (from storage)
Outlet Pressure:	PI-102	site specific (psi)
Flow Rate (split flow):	FQI-151A(B)	~ 12-13 gpm per vessel
Differential Pressure:	PDIS-173A(B)	~ 3 to 6 psi
Differential Pressure Switch Settings		10 psi (to activate auto backwash)
Time to activate auto backwash for A		site specific set at startup (automatic)
Time to activate auto backwash for B		site specific set at startup (manual)
Cycle time for backwash (each vessel)		18 minutes/vessel @ ~44 gpm (target set point)

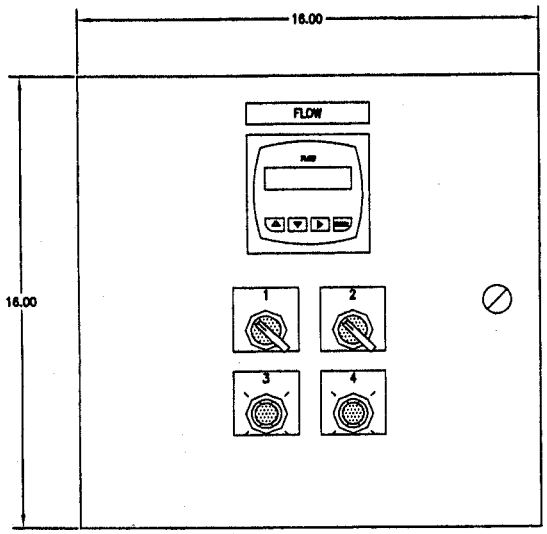

FRONT VIEW
STAINLESS STEEL ENCLOSURE
NEMA 4X
16"H X 16"W X 6"D

1. BACKWASH INLET VALVE HAND - ON - OFF
2. PANEL POWER OFF - ON
3. VESSEL A IN BACKWASH
4. VESSEL B IN BACKWASH

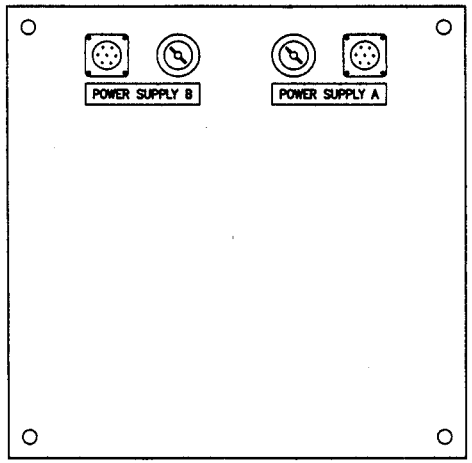

REAR VIEW

No.	DESCRIPTION	DATE	BY
1	REVISIONS		

Project No:
MPAZ-0706

adedge

THIS PRINT IS LOANED SUBJECT TO RETURN UPON REQUEST AND UPON THE EXPRESS CONDITION THAT IT WILL NOT BE USED DIRECTLY OR INDIRECTLY IN ANY WAY DETRIMENTAL TO OUR INTERESTS.

MINGUS PANORAMA ESTATES
2 VESSEL ARSENIC REMOVAL SYSTEM
CONTROL PANEL - FACE LAYOUT

DATE: 07/28/06	SCALE: NONE	DRAWN BY: JJK	DESIGNED BY: JJK
PAGE No: 1 OF 2	JOB No: 6-41	CAD FILE: 6-41	

DRAWING No:
F-01

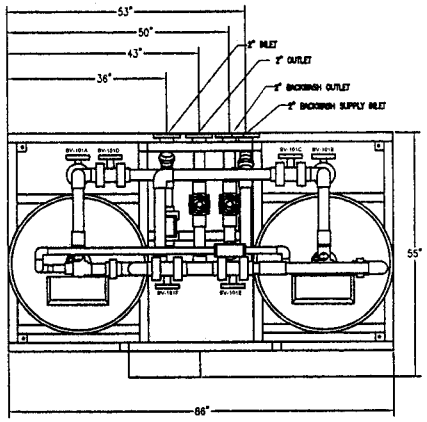

ΔP - PRESSURE DIFFERENTIAL GAUGE
PI - PRESSURE GAUGE
SV - SAMPLE VALVE
FE - FLOW ELEMENT
BV - BALL VALVE
DV - DIAPHRAGM VALVE

NOTE:
1. ALL DIMENSIONS ARE +/-1"
2. ALL PIPING MATERIAL: PVC SCH80
3. SHIPPING WEIGHT = 870LBS

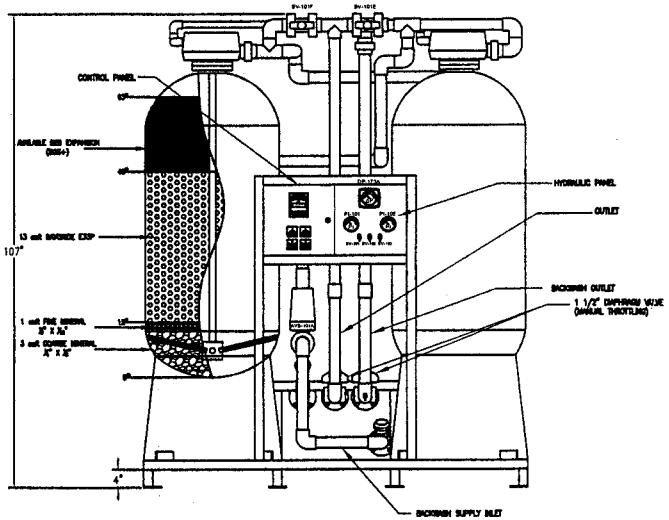

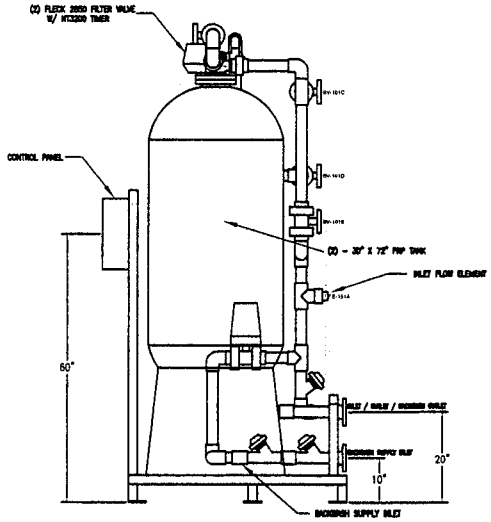

DO NOT SCALE DRAWING. REFER TO ADEDGE ENGINEERING DEPARTMENT FOR ALL DIMENSIONS.

5152 Belle Wood Court
Buford, GA 30519
678-835-0052 * 678-835-0057 Fax
www.adedgetechnologies.com

TIE	SERVICE CONNECTIONS	TYPE / MATERIAL
101	WELL WATER FEED INLET	2" FLANGE, PVC
102	TREATER WATER OUTLET	2" FLANGE, PVC
103	SYSTEM BACKWASH OUTLET	2" FLANGE, PVC
104	BACKWASH SUPPLY INLET	2" FLANGE, PVC

Title
GENERAL ARRANGEMENT DRAWING
MODEL: APU-25LL-S-2-B

Designed by	Checked by	Approved by	Project	Date	Scale
CN/AS	GG	GG	MPAZ-0706	07/26/06	NTS

Customer: MINGUS PANORAMA ESTSTES

Dwg. File	Rev. No	Sheet
6-41GA_A(0)	0	1 OF 1

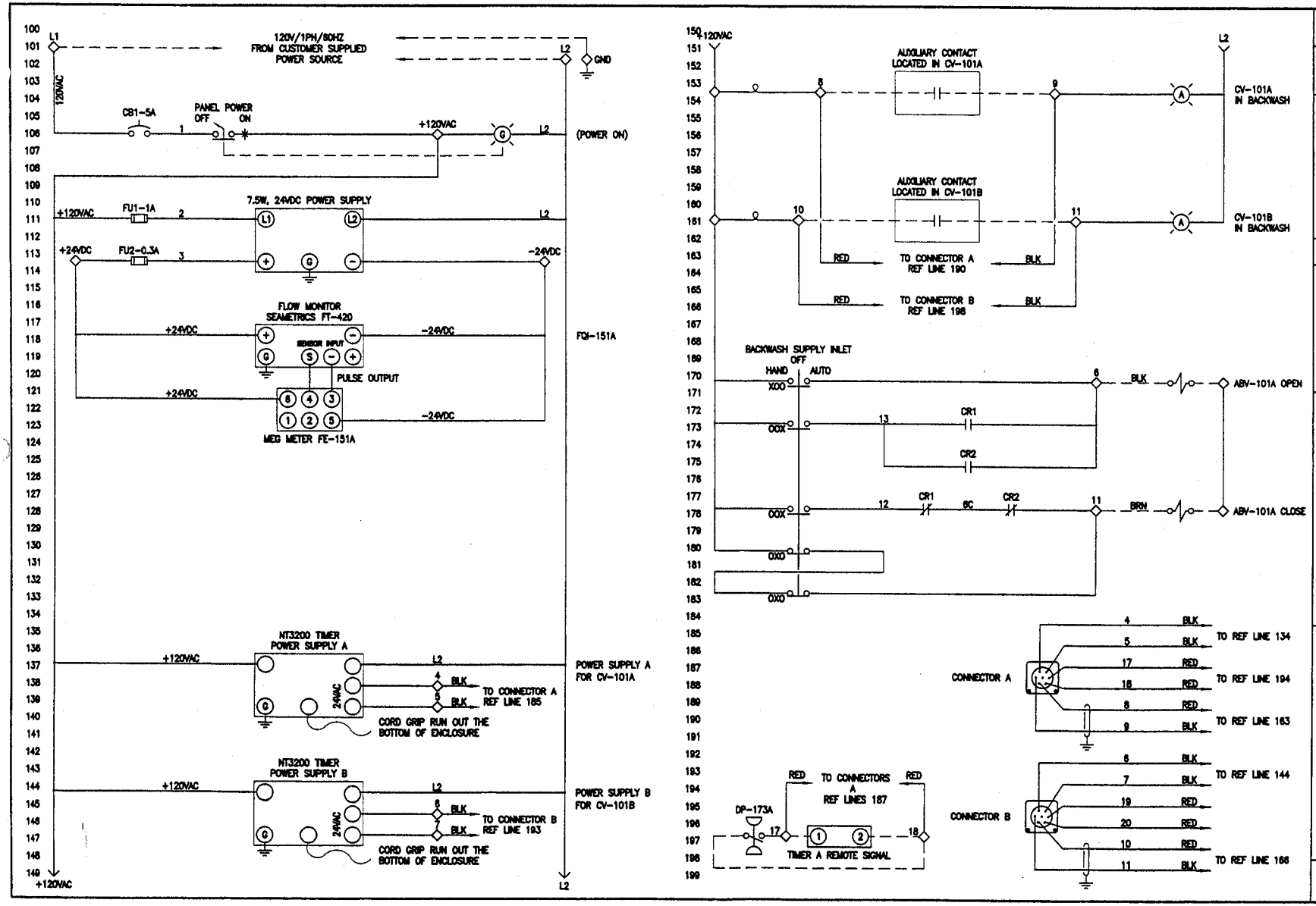

No.	DESCRIPTION	DATE	BY
	REVISIONS		

Project No:
MPAZ-0706

adedge

THIS PRINT IS LOANED SUBJECT TO RETURN UPON DEMAND AND UPON THE EXPRESS CONDITION THAT IT WILL NOT BE USED DIRECTLY OR INDIRECTLY IN ANY WAY DETRIMENTAL TO OUR INTERESTS.

MINGUS PANORAMA ESTATES
2 VESSEL ARSENIC REMOVAL SYSTEM
CONTROL PANEL - WIRING DIAGRAM

DATE: 07/26/06	SCALE: NONE	DRAWN BY: JLP	DESIGNED BY: JJK
PAGE No: OF	JOB No: 6-41	CAD FILE:	6-41

DRAWING No:
E-01

XX/#### = SUPPLIER PART NUMBER

SEQUENCE LEAD = VESSEL A LAG = VESSEL B	BV-101A RED	BV-101B GREEN	BV-101C RED	BV-101D GREEN	BV-101E RED	BV-101F GREEN
SERVICE	O	X	O	X	O	X
BACKWASH A	O	X	O	X	O	X
BACKWASH B	O	X	O	X	O	X
FAST RINSE	O	X	O	X	O	X
SEQUENCE LEAD = VESSEL B LAG = VESSEL A	BV-101A RED	BV-101B GREEN	BV-101C RED	BV-101D GREEN	BV-101E RED	BV-101F GREEN
SERVICE	X	O	X	O	X	O
BACKWASH B	X	O	X	O	X	O
BACKWASH A	X	O	X	O	X	O
FAST RINSE	X	O	X	O	X	O

VALVE POSITION

O = OPEN
X = CLOSED

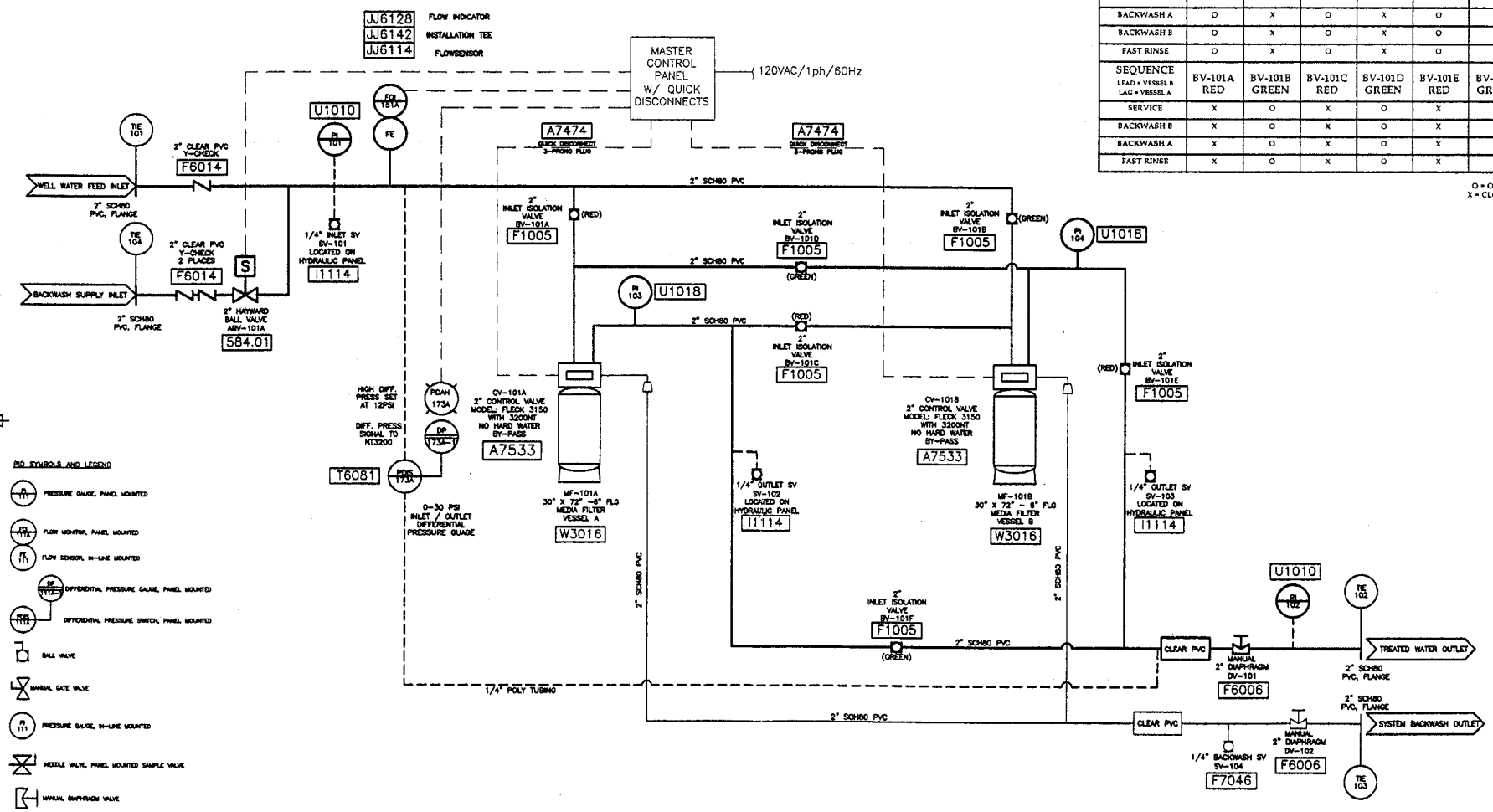

NOTES:
1. MODEL: APU-25LL-S-2-B
2. MAX DESIGN FLOW: 25GPM
3. DESIGN BACKWASH FLOW: 44GPM
4. DIFFERENTIAL PRESSURE GAUGE AND SAMPLE PORTS TO BE MOUNTED ON HYDRAULIC PANEL
5. ADSORPTION UNITS IN SERIES W/ MANUAL LEAD/LAG REVERSIBLE SWITCH OPTION

5152 Belle Wood Court
Buford, GA 30519
678-835-0052 · 678-835-0057 Fax
www.adedgetechnologies.com

TIE	SERVICE CONNECTIONS	TYPE / MATERIAL
101	WELL WATER FEED INLET	2" FLANGE, PVC
102	TREATER WATER OUTLET	2" FLANGE, PVC
103	SYSTEM BACKWASH OUTLET	2" FLANGE, PVC
104	BACKWASH SUPPLY INLET	2" FLANGE, PVC

Title
PROCESS & INSTRUMENT DIAGRAM
MODEL: APU-25LL-S-2-B

Designed by	Checked by	Approved by	Project	Date	Scale
CN/AS	GG	GG	MPAZ-0706	07/26/07	NTS

Customer: MINGUS PANORAMA ESTATES

Dwg. File	Rev.No	Sheet
6-41PID_A(0)	0	1 OF 1

adedge

27 July 2006

Mr. Krishan Ginige, SEC Inc.
Mingus Panorama Domestic Water System
Cornville, Arizona

Subject: **Arsenic Treatment System Proposal**
Mingus Panorama Domestic Water System
Cornville, Arizona

Dear Mr. Ginige:

AdEdge Technologies Inc. (AdEdge) thanks you for the opportunity to provide this proposal to address arsenic treatment for the Mingus Panorama Domestic Water System. As you may be aware, AdEdge is very active throughout Arizona and the entire U.S. assisting communities, schools, and residential developments with arsenic solutions for water systems similar to what you have requested. AdEdge is confident we can meet, or exceed, your requirements.

AdEdge understands that the proposal includes the packaged adsorption system, equipment submittals and permit support, shop drawings, start up and commissioning, freight, and softener equipment.

This proposal contains the following information:

- site background;
- treatment effectiveness and efficiency;
- O&M requirements;
- local and state permits; and
- additional requirements.

on past operations, AdEdge is certain that we can provide an effective, integrated, treatment solution using a new water softener system and granular ferric oxide (GFO) adsorption technology employed in our Bayoxide E33 treatment systems. The purpose of this section of the proposal is to present information that demonstrates the effectiveness and efficiency of the GFO process in removing arsenic from drinking water.

2.2 Technology Description

Adsorption System. The proposed arsenic treatment system will utilize Bayoxide E33 media. This GFO pelletized media is packaged into integrated systems for arsenic treatment, which is a proven adsorption technology designed specifically for drinking water applications. It was developed in the United Kingdom (UK) in the mid-1990s specifically for the arsenic market, and has been proven successful many times in lowering arsenic concentrations to less than the new USEPA arsenic MCL. The GFO media is manufactured by Lanxess (formerly Bayer AG), a partner with STS and AdEdge in providing simple, economical solutions for drinking water purification. The media is specifically designed to meet the adsorption challenges posed by the new MCL for public drinking water systems. The media is robust and easy to handle, is stored and shipped dry, and has a National Sanitation Foundation (NSF) 61 approval for use in drinking water applications.

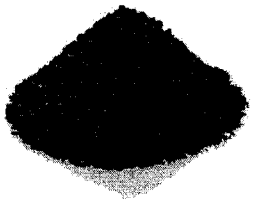

This arsenic removal process employs a fixed-bed adsorption system using the E33 pelletized GFO media (adsorbent) for dissolved arsenic reduction (GFO media shown at the left). Groundwater is simply pumped in a down-flow mode through a single vessel, or multiple fixed-bed pressure vessels, containing the media where the arsenic removal occurs.

Unlike many other adsorbents, both As (III), or arsenite, and As (V), or arsenate, species are removed from water via a combination of adsorption, occlusion (adhesion), or solid-solution formation by reaction with ferric oxide ions. Arsenite is nonionic at normal water pH and, therefore, will not be as quickly adsorbed as an anion because adsorption kinetics for As (III) is slower than that of As (V). Above pH 7, the primary mechanism is adsorption of the oxyanions to the surface hydroxyl groups of ferric oxide or hydroxide as indicated below:

$$(HO)_2Fe\text{-}O\cdots H\cdots O_4AsH_n^{-(3-n)}$$

The adsorption process is continuous and conducted in a downflow direction at a specific flow rate, or velocity, through the fixed bed adsorber. In addition to velocity, the other key process parameter is empty bed contact time (EBCT), which indicates the water residence duration

normally disposed of as a non-hazardous waste. After the exhausted media is vacuumed out of the vessels, fresh media is poured into the vessels. The units are then backwashed and forward flow is initiated.

Water Softener. In addition to the adsorption system, AdEdge is also proposing a conventional cationic water softener to precede the adsorption system to reduce hardness, iron, and manganese concentrations in the water supply. The water softener will consist of an ion exchange system with a single tank with 7 cubic feet of resin for 210,000 grain capacity. A 24-inch diameter brine tank will be used. The water will flow through the mineral tank where calcium and magnesium ions are exchanged for sodium ions. Over time, the resin becomes exhausted and is recharged with a brine solution from the salt tank. It is anticipated that the system will be regenerated approximately once per week.

2.3 Process Flow Diagram

Figure 1, attached to this document, presents a process flow schematic for the proposed AdEdge arsenic removal system. As shown in the figure, the treatment system generally consists of the following components:

- single tank softener with brine tank
- two adsorption pressure vessels in series;
- control valves and timers;
- flow elements and flow meters; and
- internal piping connecting the units.

Water flow through an AdEdge system can be set up in either parallel, or series (lead/lag) mode. AdEdge is proposing a lead/lag (series) configuration system. A series system has some excellent advantages (i.e, greater media utilization and lower operating costs), but entails a greater capital cost than a parallel system. In our series configuration, AdEdge is proposing two 30 by 72-inch vessels.

2.4 Water-Treatment Capabilities for Treating Source Water

In the past several years, AdEdge has installed over 100 full-scale treatment systems throughout the U.S. In addition to those full-scale systems, AdEdge and STS have performed pilot-testing programs (see following Section 2.6 that discusses technology history). Table 1, attached to this document, presents water-quality data from full-scale and pilot-scale systems that have utilized the GFO adsorption treatment technology. As shown in the table, many of those systems have higher arsenic concentrations and the systems have performed extremely well. Two New Hampshire systems and one Arizona system are described below.

designated sample ports following startup of the system. Initial effluent concentrations indicate high efficiency arsenic removal. Samples have been obtained regularly and the demonstration period is being continued.

The performance data demonstrate the effectiveness of a GFO adsorption system in removing arsenic from drinking water. As shown in the Project Profile (Attachment 1), arsenic concentrations ranged from 0.048 to 0.078 mg/L. After a recent sampling event in 2006, approximately 80,000 BVs have been treated and the arsenic concentration in the effluent from the lead vessel is 8 ppb and the arsenic concentration in the lag vessel is 0.4 ppb. Silica concentrations in the Rimrock influent have generally been about 25 to 26 mg/L.

2.5 Capability of Meeting the Revised MCL

Table 1, attached to this proposal, presents water-quality data at over 20 sites where AdEdge and STS have installed and operated full-scale and pilot-scale operations. Influent arsenic concentrations in the systems range from 12 ppb to over 50 ppb; effluent concentrations are all below the proposed arsenic MCL (i.e., 10 ppb). Therefore, AdEdge does not have any doubt that our proposed system will absolutely meet the new MCL. The data in the preceding section demonstrate the capability of the process in meeting the revised USEPA MCL.

2.6 Treatment Technology History

While a comprehensive narrative of the media and system development is beyond the scope of this proposal, a concise development timeline with key events is presented in the list below. The Bayoxide E33 adsorption media was developed by Bayer AG, after extensive evaluation of commercially available arsenic treatment technologies. The development program included numerous field and pilot studies with several versions of experimental adsorptive media. Bayoxide E33 has been in commercial use in the UK since 1999 and several hundred thousands of people use this technology. The list below provides some highlights of the development program:

- 1994 – STS began laboratory testing for arsenic removal. Adsorption technology was recognized as the most effective technology and chosen for further study; STS began collaboration with Bayer AG (now called Lanxess) in Germany. STS and Bayer performed field pilot studies with several adsorption technologies examining adsorption, hydraulics, interferants, and spent media properties.
- 1997 – STS started a pilot plant at Nottingham, UK using Bayoxide E33.
- 1999 – Bayoxide E33 became available commercially and a large water treatment system (5.3 million gallons per day) was commissioned in Nottingham, UK.
- 2000 – STS initiated a Bayoxide pilot demonstration in New Mexico.

(South Weare, Maplevale, Oakhill, Tanglewood, and Hudson Motor Inn). All systems are performing well.

USEPA Demonstration Program. On October 31, 2001 USEPA announced that the final arsenic drinking water standard of 10 ppb would become effective on 22 February 2002 without any further action by USEPA. The effective date of 22 February 2002 meant that the date by which systems must comply with the new standard is 23 January 2006. As part of that announcement, the USEPA Administrator pledged to provide research and development funds to evaluate cost-effective technologies as well as technical assistance and training to operators of small systems to reduce their compliance costs. Battelle Memorial Institute (Battelle), under contract with the USEPA, is conducting a drinking water treatment technology demonstration research project as part of the research and development effort in arsenic technology evaluation. Twelve and 28 sites around the U. S. were selected as demonstration sites under Round 1 and Round 2, respectively, of the research project. AdEdge's adsorptive media (Bayoxide E33) technology was selected by an independent technical review panel convened by USEPA, to be demonstrated for its effectiveness in removing arsenic at nine USEPA demonstration sites as listed below:

- Rimrock, Arizona – 75 gpm system (Round 1);
- Rollinsford, New Hampshire – 100 gpm system (Round 1);
- Nambe Pueblo, New Mexico – 150 gpm system (Round 1);
- Bruni, Texas – 50 gpm system (Round 2);
- Wellman, Texas – 100 gpm system (Round 2);
- Springfield, Ohio – 250 gpm system (Round 2);
- Tohono O'odham Nation, New Mexico – 50 gpm system (Round 2);
- Goffstown, New Hampshire – 15 gpm system (Round 2); and
- Stewart, Minnesota – 250 gpm system (Round 2).

In addition to these nine sites, the E33 adsorptive media technology was selected for five Round 1 and Round 2 sites with systems provided by AdEdge's partner, Severn Trent Services (STS):

- Anthony, New Mexico (Round 1);
- Brown City, Michigan (Round 1);
- Stevensville, Maryland (Round 1);
- Alvin, Texas (Round 2); and
- Taos, New Mexico (Round 2).

As described previously, besides the USEPA demonstration sites, AdEdge has also installed over 100 full-scale treatment systems in locations throughout the U. S. and about 1,500 whole-house point-of-entry (POE) systems in the U. S. and Canada. In addition, GFO adsorption media has been used in the UK since 1999. STS has designed and installed full-scale arsenic treatment

ppb to 10 ppb in 1998, which necessitated the research and development of the GFO media. Therefore, GFO technology has a long history of treating drinking water to remove arsenic.

2.8 Third Party Test Data

As mentioned previously, AdEdge is participating in the USEPA Round 1 and Round 2 demonstration programs. AdEdge and STS have been awarded a total of 14 demonstration sites out of a total of 40 sites. (Note: Adsorption technologies have been awarded 28 out of 40 sites.) Clearly, USEPA recognizes the efficacy, simplicity, and cost-effectiveness of the GFO technology and other adsorption technologies. During these demonstration projects, Battelle supervises every aspect of the program and site-specific work elements. A detailed study plan is developed for each site and Battelle supervises site operators in collecting a significant number of samples. Water samples are collected weekly during the first month, monthly for the next two months, and quarterly for one year. Detailed water-quality analyses are performed on the water-supply samples. These results offer third-party test data.

As described previously, one of the USEPA Round 2 demonstration sites is located in Goffstown, New Hampshire. AdEdge began project implementation in December, 2004 following approvals of the engineering submittals and permit by the New Hampshire Department of Environmental Services. Upon system construction, AdEdge installed the 10-gpm APU arsenic treatment system. Historically, arsenic concentrations reported in the well serving the town ranged from 33 ppb.

AdEdge installed an APU-10 system designed for 10 gpm maximum flow. The system utilizes its Bayoxide E33 GFO adsorption media. The small footprint system features a twin vessel configuration with automatic controls, PLC, and series flow configuration. The system was placed into continuous operation in April 2005, treating approximately on average 4,000 gallons per day. Samples have been obtained throughout the past year of the influent and effluent from designated sample ports following startup of the system. Initial effluent concentrations indicated high efficiency arsenic removal efficiencies. Data for the complete year may be available from Battelle. Recent system information is as follows: flow rate: 14 gpm; influent arsenic concentration: 36 ppb; effluent concentration: 4 ppb; bed volumes treated: 36,000; gallons treated: 1.4 million gallons.

2.9 Pretreatment Needs and Residuals Handling

Pre-treatment Needs. Based on the water-quality profile the most effective water treatment technology/system to remove hardness and arsenic will consist of a water softener to remove the hardness and an adsorption system to remove the arsenic to less than 10 ppb. Water softeners are

- WO 200226631 – Flow-through apparatus for removing arsenic from water; treatment comprises lumps of adsorbent/reactant comprising iron oxide and/or oxyhydroxide bound with metal oxides and/or (oxy)hydroxides;
- WO 200226632 – Flow-through apparatus useful for removing pollutants from fluids (such as water); comprises agglomerates of finely divided iron oxide and/or oxyhydroxide; and
- WO 200226633 – Filtration unit for removing pollutants from fluids, especially water, comprises agglomerates of finely divided iron oxide and oxyhydroxide.

STS, through its Capital Controls Ltd. subsidiary, has applied for one patent related to the arsenic removal that AdEdge is proposing. Patent application number 0004579.9, filed on February 25, 2000, is for an invention that relates to a method and apparatus for arsenic or other metal removal from water, in particular, but not exclusively, potable groundwater.

3.0 O&M REQUIREMENTS AND SYSTEM APPLICABILITY

3.1 Operator Skills Requirements

The AdEdge E33 systems have been designed to minimize operator attention. These systems consist of simple pressure vessels operated in parallel or series downflow configuration with flow controls and automated valves. The primary operator functions, in addition to sampling and analysis, are monitoring flow, pressure, pressure differential, and total flow. Other functions are to ensure each pressure vessel is backwashed (i.e., fluffed) on a periodic basis which is performed automatically with the control package. The operator will also need to do some checks of the system to ensure the system is operating within parameters.

AdEdge will provide operating manuals with each system that are simple and easy to understand by operators who are experienced in servicing wells and disinfection equipment. The O&M manuals will contain data logs sheets to

Systems Operation Checklist	Daily	Weekly	Monthly	Quarterly
Parameters				
Check to ensure system operating	X	X		
Check site security	X	X		
Check for leaks or integrity		X		
Feed water pressure guage		X		
Discharge water pressure guage		X		
Read differential pressure guages		X		
Level in backwash tank (if applicable)		X		
Record flow totalizer throughput			X	
Record flow rate (gpm)			X	
Check visual clarity of effluent water			X	
Prefilter or BW filter checks			X	
Equipment Maintenance				Per Manual
Performance Sampling and Analysis			X 1	X

notes: (1) Sampling frequency is site specific

manually into the vessels as a dry product. Fines, or dust, can disperse into the air during loading operation. Standard safety precautions are identified in the Material Safety Data Sheet (MSDS). Dust masks and goggles should be worn by those performing the operation. The media is non-hazardous, but inhalation or contact with the eyes can be a minor annoyance. Spent media is also non-hazardous and is removed as a wet solid with a vacuum unit. As mentioned in the previous section, no chemical usage is required with the proposed Lincoln Akerman school system.

3.6 Equipment Size and Floor Space Requirements

The proposed AdEdge modular system will consist of two 30-inch by 72-inch pressure vessels containing the E33 media. Other conventional components will include piping, valves, and flow meters. Interconnecting piping will be Schedule 80 PVC, or copper, with instruments sensors, valves, flow restrictors, and other instrumentation installed in-line. The E33 media for the system will be shipped separately and loaded at the site. The only moving parts of the system equipment are the valve controller.

The system will have three tie-in points: influent source water, treated effluent, and backwash water. The pressure vessels will be delivered to the site empty (i.e., without media). The AdEdge installer will add the dry media to each vessel on the site. Therefore, the total footprint will be about 86 inches long by 55 inches wide and 107 inches high, which is very small compared to competitive systems and will fit easily into the available building space.

3.7 System Adaptability

The systems proposed by AdEdge are designed to be very easy to install. Tie-ins to the existing wellhead/system consist of the following:

- connecting the line from the pressure tanks to the treatment vessels;
- connecting the effluent (treated water) line to the distribution; and
- connecting the backwash line to the backwash disposal option.

As stated previously, backwash water can be directed to either a POTW, a septic tank drain field, or to a water storage tank for recycling back into the treatment system.

3.8 Engineering/Installation Requirements

Unless otherwise specified, AdEdge will deliver a packaged adsorption system that is pre-engineered for ease of installation and operation. Based on the information provided, Mingus Panorama Domestic Water Supply does have adequate space to accommodate this equipment. A process and instrumentation diagram and a site layout has been developed for permit approval.

By offering innovative cost-effective solutions, AdEdge has gained a competitive advantage in the marketplace. The Company headquarters are located at 5152 Belle Wood Court in Buford, Georgia.

4.2 References

AdEdge has multiple small water systems currently operating in Arizona. Attached is a project and reference list that can provide first hand knowledge of AdEdge and our arsenic water treatment systems.

4.3 Additional Services

In addition to the minimum listed services in the preceding sections, AdEdge is prepared to supply additional granular ferric oxide adsorption media as needed. AdEdge has a readily available supply of the media from STS.

AdEdge is also prepared to assist with services to remove and dispose of the exhausted media. A cost estimate for those services can be provided within a few days of a request for those services. Disposal and or recyling (use of the spent material in a manufacturing process that calls for iron) costs for exhausted media should be less than $500 per event.

4.4 Professional Liability Insurance

AdEdge maintains over one million dollars in professional liability insurance.

5.0 CONCLUSIONS

AdEdge is supplying Mingus Panorama Domestic Water System a simple, state-of-the-art, proven arsenic treatment system that will meet their water-supply needs. The proposed E33 arsenic adsorption treatment system offers the following benefits:

- a reliable and proven treatment system that will remove arsenic concentrations from the existing water-supply to below the proposed 10 ppb MCL;
- a simple-to-operate system that requires little attention;
- a consistent and dependable source of adsorption media that is robust and will last significantly longer than other comparable adsorption media; and
- a dependable treatment system with a technology that has been in significant use since 1998 and is providing water treatment for over two million users.

Process Flow Schematic

AdEdge APU Treatment System with Softener

adedge

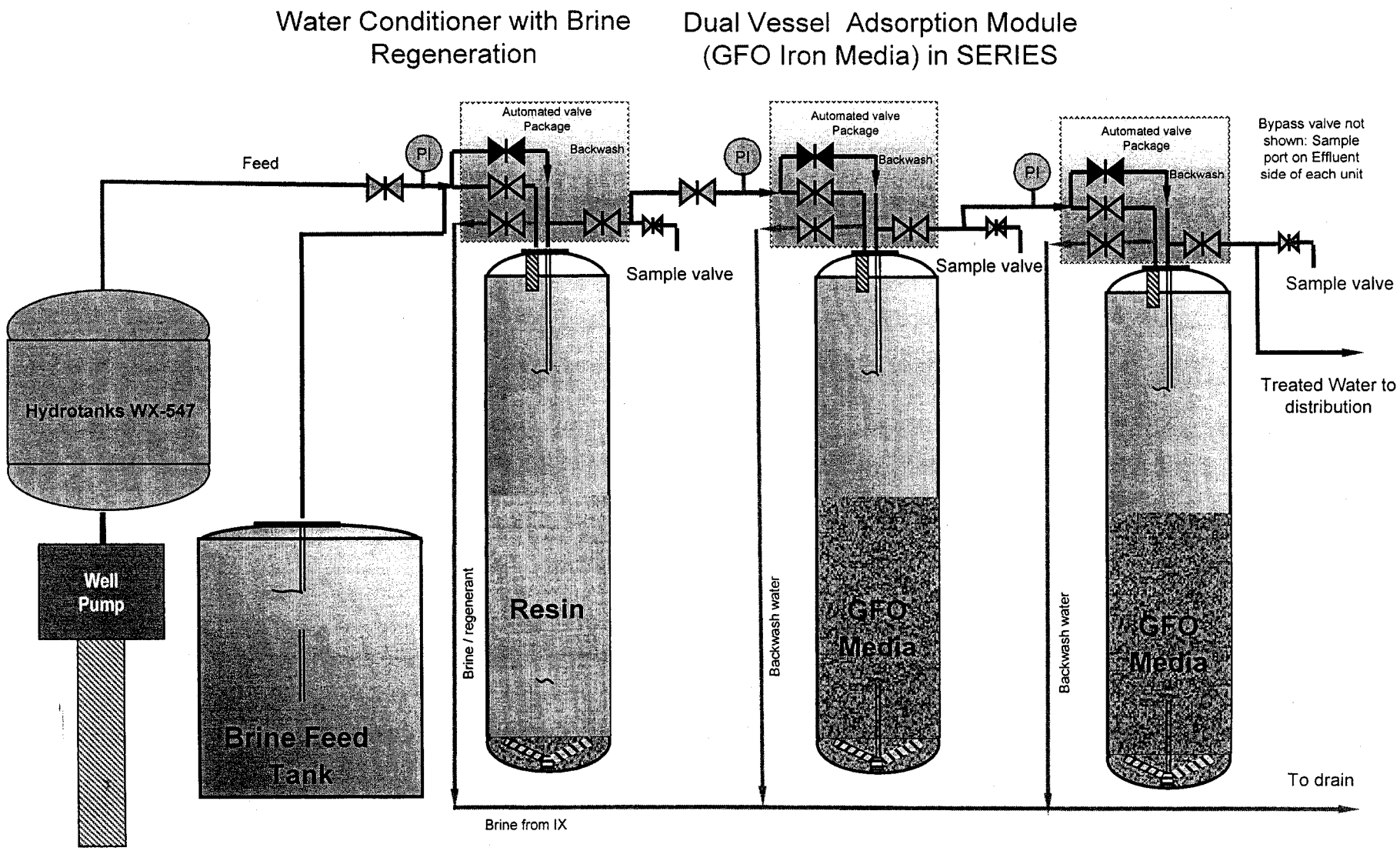

Project Profile

adedge

EPA Arsenic Treatment Demonstration
Rimrock, Arizona

Background

In mid 2003, AdEdge Technologies Inc. (AdEdge) was selected to implement three full scale arsenic treatment Demonstration Projects with USEPA using its granular ferric oxide (GFO) technology. At the Rimrock location, implementation began in September, 2003 including engineering submittals and permitting by the Arizona Department of Environmental Quality (ADEQ). Upon completing site preparations and construction in early March, AdEdge installed the new 100 gpm Adsorption Package Unit (APU) arsenic treatment system at the Montezuma Haven well site. This system was AdEdge's second installation for a public drinking water system in Arizona utilizing GFO technology. Historically, arsenic levels reported in the source wells serving the community ranged from 50 to 55 parts per billion (ppb), over five times the new USEPA standard of 10 ppb. A complete water profile was obtained on the source water to assess the water chemistry and predict performance. The table below lists some of the more important water-quality parameters.

APU-100 System – Rimrock, Arizona
Arsenic Treatment Demonstration

System Description

AdEdge and its local subcontractor installed an APU-100 designed for up to 100 gpm maximum flow in an outdoor location near the well head. The system was converted to a SERIES flow configuration due to the lower than expected well pumping capacity. The system utilizes Bayoxide E33 adsorption media. The small footprint system features a twin vessel configuration with automatic controls, PLC, series flow configuration and a 100 percent backwash recycle system with zero discharge or loss of water. No pretreatment is necessary. For disinfection purposes, sodium hypochlorite is injected prior to entering the distribution system. The AdEdge adsorption system requires no chemicals, regeneration, and does not generate liquid or hazardous waste. Media, when spent, will be discarded as a non-hazardous solid waste. Minimal operation, maintenance, or operator attention is required for this simple automated system. Instrumentation is provided on a control panel to measure critical operating parameters. Total gallon throughput and flow rate for each vessel is measured continuously with a dedicated flow totalizing meter.

Total As **	0.052	mg/L As
As(III)	< 0.05	mg/L
Alkalinity	374	mg/L @ CaCO3
Hardness **	330	mg/L @ CaCO3
Silica **	26.0	mg/L SiO2
Phosphate **	< 0.10	mg/L P04
Sulfate **	11.6	mg/L SO4
Iron **	0.17	mg/L Fe
Manganese **	< 0.05	mg/L Mn

Performance

The system was placed into operation in June, 2004. Sustainable yield from the source wells is approximately 35 to 38 gpm. The well runs twelve hours per day with the system treating approximately 25,000 gallons per day. Weekly sampling results through 65 weeks of run time indicate excellent arsenic removal performance (i.e., below 2 ppb in the lag vessel through 65,000 bed volumes). The system uptime has been greater than 99.9 percent and the APU has run at very high treatment efficiencies despite arsenic in the raw water ranging from 45 to 80 ppb. A one-year demonstration period is being extended to 18 months by USEPA's third party contractor Battelle. The attached chart provides treatment performance of the system through 65 weeks of operation.

For More Information Contact

AdEdge Technologies, Inc.
5152 Belle Wood Court, Suite A
Buford, Georgia 30518
678-835-0052 * 678-835-0057 Fax
greg@adedgetechnologies.com
www.adedgetechnologies.com

Arizona Water Company
Mr. Bill Garfield
President of Operations
Phoenix, Arizona
602-240-6860
bgarfield@azwater.com

Water Systems - Reference Project List

6/27/2006 last revision

Contact	Client/Site	Site/Description	Scope	Phone	City	State	Comments
Michelle DeHaan	Damon S. Williams Engrs	New River Elem School	APU-30 system	602-217-1022	Phoenix	AZ	Installed July, 2004
Mark Powell	Centennial Contractors	New River Elem School	APU-30 system	602-230-9987	Phoenix	AZ	Installed July, 2004
John Snickers	Arizona Water	Rimrock USEPA Demonstration site	APU-100 system	928-853-3934	Rimrock	AZ	USEPA Phase I demonstration site installed June 2004
Andy Komer	PACE / Lowe Enterprise	Grizzly Ranch	APU, 250 gpm AD26 systems	714-481-7300	Fountain Valley	CA	APU arsenic system with iron removal
Randy Hrabina	Black Canyon City	Municipal system	APU 300 systems (3)	623-374-9795	Black Canyon	AZ	Three large APU-300 systems, Startup May, 2005
Todd Walker	Mettawee Community School	Private school water system	APU-10 system	802-325-2201	West Pawlet	VT	Installed October, 2004
Randy Siltan	Levine Fricke	Peterson Nursery	Pilot, APU-50 + AD26 systems	850-422-2555	Tallahassee	FL	Installed in December 2004
Tim Wettlaufer	Welch and Rushe & National Parks Service	WWII Memorial Project	AD26-30 (2), APU-40 systems	301-350-9300	Capital Heights	MD	Groudwater remediation installed October 2004
Tom Demaso	Norlens Water	Resdiential/commercial systems	APU-25, POE and POU systems	207-825-4964	Orrington	ME	Selling systems for over two years
John Eastman	Midwest Express Inc.	Manufacturing facility	AD26-60-S-3-B	937-259-5051	East Liberty	OH	Engineer involved in multiple OH projects
Nancy Hueman	EarthTech Engineers	Bureau of Land Mgmt	Mod 30 gpm	360-354-4521	Rome	OR	Many small systems designed and operating
John Graupman	Bolten & Menk	Hanley Falls/Stewart, MN	Pilots w/ Rural Develop. & MN DH	507-625-4171	Mankato	MN	Two very visible pilots in MN
Steve Spayd	New Jersey, DEP	Residential pilot systems	POE, POU systems	609-984-6587	Trenton	NJ	Adedge is the only tech. approved for POU/POE in NJ
Pete Oswald	Technical Vocational Inst.	School	M0d M-3-60P	505-342-1656	Albuquerque	NM	Installed 1st quarter 2006
John Kight	Isleta Resort & Casino	New Casino Well	APU-300 system	505-724-3800	Albuquerque	NM	Installed APU-300 in January, 2005
Bill Kolstad	R. C. Kolstad Water Co.	School	APU-25 system	585-216-2230	Addison	NY	System installed August, 2004
Carl Garrison	Anvil Engineering	Residential and commercial systems	POU, POE, APU-50 systems	360-707-5656	Burlington	WA	Specifying technology in WA for over two years
Joe Turner	Chateau Estates MHP	Mobile Home Park - USEPA Demonstr.	APU-250 + AD26 System	937-623-8130	Springfield	OH	USEPA Phase II Demonstration site (Spring 2005)
John Blumberg	Orchard Highlands	EPA Site	APU 20LL	603-497-2782	Goffstown	NH	Installed April 2005
Andrew Robertson	Souder Miller & Associates	Green Ridge MDWCA	APU-20LL treatment system	505-299-0942	Albuquerque	NM	System installation May, 2005
Spencer Williams	Southern Wood Piedmont	Wood Treating facility	APU 30	904-266-4251	Baldwin	FL	Installed Jan 2005

adedge

Manage the Elements

Monitoring Plan

APU-25LL Arsenic Treatment System
Mingus Panorama Site
Cornville, Arizona

Prepared for:

Mingus Panorama Domestic Water System
Cornville, Arizona

Prepared by:

Adedge Technologies, Inc
5152 Belle Wood Court, Suite A
Buford, Georgia 30518
678-835-0052 678-835-0057 fax
www.adedgetechnologies.com

July 2006

Water from the source well is pumped through a vessel or series of vessels containing the GFO media. As the water passes through the fixed bed of media, the arsenic is reduced to below 10 ppb until the media reaches its capacity. The spent media, which typically passes the U. S. Environmental Protection Agency (USEPA) toxicity characteristic leaching potential (TCLP) test, is then removed and disposed as non-hazardous waste. The media has a high capacity for arsenic that enables long operating life (typically 12 to 24 months between media change-out).

The proposed Mingus Panorama treatment system will have the following equipment:

- adsorption vessels/media;
- process valves and piping; and
- instrumentation and controls; and
- backwashing system.

A typical photograph of a modular treatment system is show in Figure 1 and a schematic diagram is presented as Figure 2 (at the end of this monitoring plan). The photograph in Figure 1 shows a skid-mounted adsorption system, piping, and instrumentation. The schematic diagram in Figure 2 depicts the piping and valves, treatment units, instrumentation, sampling ports, and gauges. Detailed design and engineering information is provided in a separate engineering document associated with these units.

3.0 WATER-QUALITY MONITORING PROGRAM

3.1 Introduction

The objectives of the monitoring program are as follows: (1) to establish the initial system performance with regards to arsenic removal; and (2) to establish initial and on-going compliance monitoring. Mingus Panorama will achieve these two objectives by implementing a water-quality monitoring program. As described in the following sections, the water-quality monitoring program incorporates semi-quantitative and quantitative analytical methods. Section 3.2 describes sampling locations; Section 3.3 lists the number and frequency of samples to be taken, and the sample protocols; and Section 3.4 describes the sample shipping and handling procedures.

analysis; the off-site sample bottles will contain nitric acid preservative which can cause chemical burns.);

- collect additional samples, as necessary, for pH analysis or other in-situ measured constituents;
- place the samples within the appropriate sample shipping unit; and
- continue to the next sampling port in the sequence and perform the same procedures listed above.

It is assumed that Mingus Panorama will collect water samples for off-site analysis in bottles provided by a certified laboratory. In accordance with Title 40 Code of Federal Regulations Part 141.23 (40 CFR 141.23), arsenic water samples can be collected in either clean plastic or glass containers. Each sample container for arsenic analysis should contain enough nitric acid preservative to reduce the pH of the sample to less than 2; those samples must be analyzed within a period of six months. Samples should be analyzed using USEPA Methods 200.8/6020 (i.e., inductively coupled plasma/mass spectrometric (ICP-MS)), or an equivalent method.

3.4 Sample Shipping and Handling

Sample bottles should be placed in appropriate shipping containers and shipped via overnight courier to the analytical laboratory. The sample bottles should be shipped under chain of custody procedures. The analytical laboratory will provide blank chain of custody forms and sample bottle labels. Chain of custody information will include the following:

- site location and contact information;
- names and signatures of individuals performing sample collection;
- sample identification numbers;
- number of sample containers;
- sample collection time and date;
- sample analyses requested and sample analysis methods; and
- time that samples were relinquished to courier.

Mingus Panorama personnel will track sample progress throughout the entire process. First, Mingus Panorama personnel will contact the analytical laboratory to ensure that the samples were received at the laboratory. Mingus Panorama personnel will then follow up periodically until sample analytical results are received. Analytical results will be managed in accordance with procedures described in Section 4 of this monitoring plan.

AdEdge Arsenic Adsorption Treatment System
System Scope of Supply and Features

adedge

AdEdge Technologies, Inc.
Mingus Panorama Water Company 7/24/2006 A

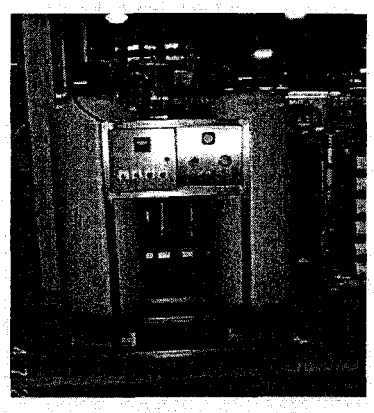

APU-25 packaged system shown

Adsorption Vessels/Media

APU-25LL-S-2-B model system rated for up to 25 gpm flow
Pre-packaged, skid mounted system on steel tubular frame
Two 30-inch fiberglass vertical adsorption (pressure) vessels
Hub and lateral collection system and riser
Bayoxide E33 adsorption media (24 ft3), 14x18 mesh
Gravel/quartz underbedding
Media fill: gravity fill or pneumatic fill / empty

Process Valves and Piping

Top mounted automatic flow control package and effluent valve
Automatic backwashing and manual isolation
NT3200 LCD Timer or pressure differential activated backwashing
Sch 80 PCV interconnecting piping, unions

Instrumentation & Controls

Stainless steel instrument panel for mounted instruments / reading
Supplemental backwash tie in with HOA panel switch
Single NEMA 4X control panel enclosure, 24VAC transformers
Flow meter, flow totalizers on each vessel
Pressure and differential pressure guages
Stainless steel sample valves on panel for monitoring

Field Services & Misc

System installation (optional)
System startup and training by AdEdge (2 days)
Training and O&M manual
Submittals to support permitting (shop drawings)

Softening Unit

Model CS-210F Softener, FRP; 6" flange tank
Max 30 gpm flow rating; 1.5" dia inlet, 1" drain
7 cu ft softening resin
24" diameter vess.w/ 24"diameter brine tank
210,000 grains/tank
120VAC @ 5 amps

Installation and Building Tasks (to be determined, scoped and priced)

Off-loading and installation and piping of equipment
Off-loading and installation of softener system
Install concrete slab or base for skid mounted unit
Tie in for single phase 115v, 20 amp electrical service to equipment
Install backwash line to designated location
Metal enclosure, lighting, receptacles for housing of the treatment unit

Terms

Lead time for equipment fabrication is 6-7 weeks upon receipt of PO
Freight for systems and media is FOB manufacturing site in IL or GA
See AdEdge Terms and Conditions attached
AdEdge to assist with startup at the site per specifications
1 year manufacturer's warranty on equipment (see terms and conditions)

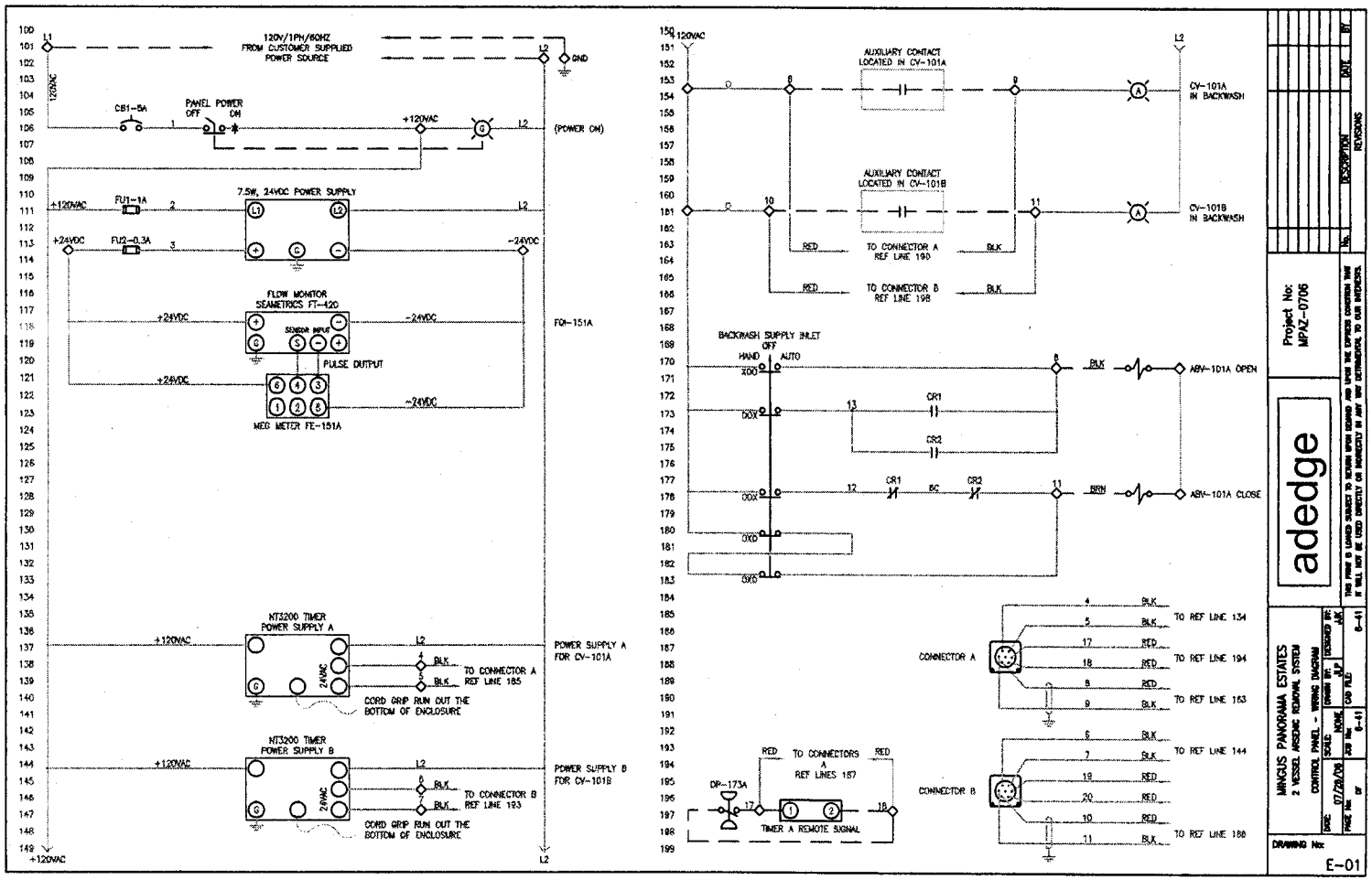
120V/1PH/60HZ
FROM CUSTOMER SUPPLIED
POWER SOURCE
GND
CB1-5A
PANEL POWER
OFF ON
+120VAC
(POWER ON)
7.5W, 24VDC POWER SUPPLY
FU1-1A
FU2-0.3A
+24VDC
-24VDC
FLOW MONITOR
SEAMETRICS FT-420
SENSOR INPUT
PULSE OUTPUT
MEG METER FE-151A
FQI-151A
NT3200 TIMER
POWER SUPPLY A
TO CONNECTOR A
REF LINE 185
CORD GRIP RUN OUT THE
BOTTOM OF ENCLOSURE
POWER SUPPLY A
FOR CV-101A
NT3200 TIMER
POWER SUPPLY B
TO CONNECTOR B
REF LINE 193
POWER SUPPLY B
FOR CV-101B
AUXILIARY CONTACT
LOCATED IN CV-101A
CV-101A
IN BACKWASH
AUXILIARY CONTACT
LOCATED IN CV-101B
CV-101B
IN BACKWASH
TO CONNECTOR A
REF LINE 190
TO CONNECTOR B
REF LINE 198
BACKWASH SUPPLY INLET
OFF
HAND
AUTO
ABV-101A OPEN
ABV-101A CLOSE
CR1
CR2
CONNECTOR A
CONNECTOR B
TO REF LINE 134
TO REF LINE 194
TO REF LINE 163
TO REF LINE 144
TO REF LINE 188
TO CONNECTORS
A
REF LINES 187
DP-173A
TIMER A REMOTE SIGNAL
Project No:
MPAZ-0706
adedge
MINGUS PANORAMA ESTATES
2 VESSEL ARSENIC REMOVAL SYSTEM
CONTROL PANEL - WIRING DIAGRAM
DRAWING No:
E-01

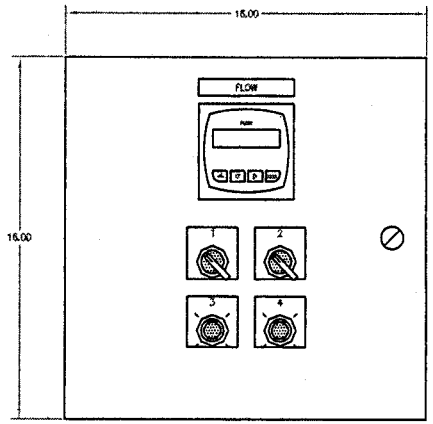

FRONT VIEW
STAINLESS STEEL ENCLOSURE
NEMA 4X
16"H X 16"W X 6"D

1. BACKWASH INLET VALVE HAND - ON - OFF
2. PANEL POWER OFF - ON
3. VESSEL A IN BACKWASH
4. VESSEL B IN BACKWASH

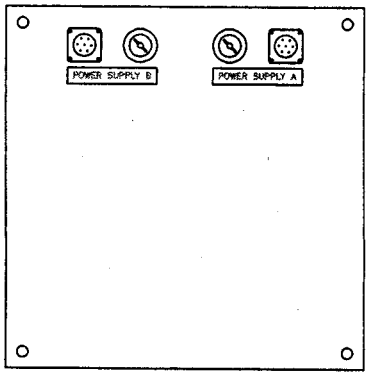

REAR VIEW

NO.	DESCRIPTION	DATE	BY
	REVISIONS		

Project No:
MPAZ-0706

adedge

THIS PRINT IS LOANED SUBJECT TO RETURN UPON DEMAND AND UPON THE EXPRESS CONDITION THAT IT WILL NOT BE USED DIRECTLY OR INDIRECTLY IN ANY WAY DETRIMENTAL TO OUR INTERESTS.

MINGUS PANORAMA ESTATES
2 VESSEL ARSENIC REMOVAL SYSTEM
CONTROL PANEL - FACE LAYOUT

DATE	SCALE	DRAWN BY	DESIGNED BY
07/29/06	NONE	JAK	JAK
PAGE No. 1 OF 2	JOB No. 6-41	CAD FILE 6-41	

DRAWING No:
F-01

= SUPPLIER PART NUMBER

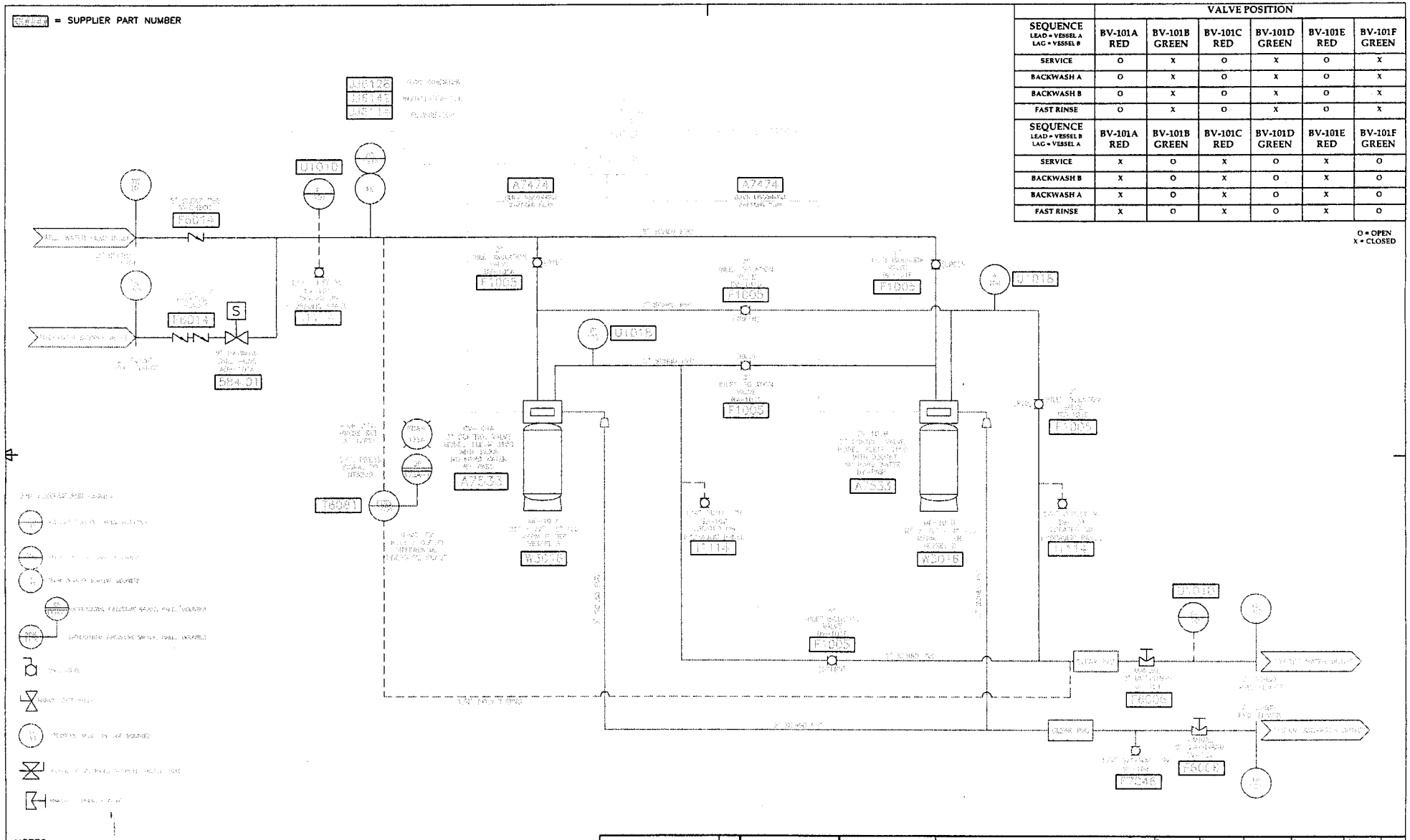

SEQUENCE LEAD = VESSEL A LAG = VESSEL B	BV-101A RED	BV-101B GREEN	BV-101C RED	BV-101D GREEN	BV-101E RED	BV-101F GREEN
SERVICE	O	X	O	X	O	X
BACKWASH A	O	X	O	X	O	X
BACKWASH B	O	X	O	X	O	X
FAST RINSE	O	X	O	X	O	X
SEQUENCE LEAD = VESSEL B LAG = VESSEL A	**BV-101A RED**	**BV-101B GREEN**	**BV-101C RED**	**BV-101D GREEN**	**BV-101E RED**	**BV-101F GREEN**
SERVICE	X	O	X	O	X	O
BACKWASH B	X	O	X	O	X	O
BACKWASH A	X	O	X	O	X	O
FAST RINSE	X	O	X	O	X	O

VALVE POSITION

O = OPEN
X = CLOSED

NOTES:
1. MODEL: APU-25LL-S-2-B
2. MAX DESIGN FLOW: 25GPM
3. DESIGN BACKWASH FLOW: 44GPM
4. DIFFERENTIAL PRESSURE GAUGE AND SAMPLE PORTS TO BE MOUNTED ON HYDRAULIC PANEL
5. ADSORPTION UNITS IN SERIES W/ MANUAL LEAD/LAG REVERSIBLE SWITCH OPTION

5152 Belle Wood Court
Buford, GA 30519
678-835-0052 * 678-835-0057 Fax
www.adedgetechnologies.com

TIE	SERVICE CONNECTIONS	TYPE / MATERIAL
101	WELL WATER FEED INLET	2" FLANGE, PVC
102	TREATER WATER OUTLET	2" FLANGE, PVC
103	SYSTEM BACKWASH OUTLET	2" FLANGE, PVC
104	BACKWASH SUPPLY INLET	2" FLANGE, PVC

Title
PROCESS & INSTRUMENT DIAGRAM
MODEL: APU-25LL-S-2-B

Designed by	Checked by	Approved by	Project	Date	Scale
CN/AS	GG	GG	MPAZ-0706	07/26/07	NTS

Customer: MINGUS PANORAMA ESTATES

Dwg. File	Rev.No	Sheet
6-41PID_A(0)	0	1 OF 1

adedge

Manage the Elements

Operation and Maintenance Manual

Groundwater Treatment System: Integrated Adsorption Package Units (APUs) For Arsenic Reduction

Mingus Panorama Domestic Water System
Project No. MPAZ-0706
Cornville, Arizona

Adedge Technologies, Inc
5152 Belle Wood Court, Suite A
Buford, Georgia 30518
678-835-0052 678-835-0057 fax
www.adedgetechnologies.com

July, 2006

TAB A
GENERAL TECHNOLOGY OVERVIEW

1.0 ADSORPTION TECHNOLOGY DESCRIPTION

1.1 Technology Overview

There are several treatment techniques used to remove arsenic from drinking water sources. The U. S. Environmental Protection Agency (USEPA) has in recent years recognized the following best available treatment (BAT) technologies for arsenic removal: oxidation/filtration, ion exchange, activated alumina adsorption, iron-based adsorption, coagulation/filtration, lime softening, reverse osmosis, and electrodialysis reversal. The iron-based adsorptive process involves passing untreated water through a pressure vessel containing a media that adsorbs the arsenic. When the adsorbent is exhausted, the spent media is replaced. The purpose of this document is to briefly describe the iron-based adsorption technology as applied by AdEdge Technologies Inc. (AdEdge).

AdEdge designed the Adsorption Package Unit (APU) specifically for arsenic removal from small systems at the wellhead utilizing iron oxide media. APU products are standard packaged systems engineered for arsenic removal in the flow range of ten gallons per minute (gpm) to 300 gpm. A central component of the integrated APU systems is the Bayoxide® E33 granular ferric oxide (GFO) adsorption media developed by Lanxess (formerly Bayer AG). E33 media has a high capacity for arsenic and, unlike other iron-based media, is delivered in a dry, non-crystalline form. The E33 media is robust, easy to handle, stored and shipped dry, and has received NSF International (NSF) approval for use in drinking water under NSF Standard 61.

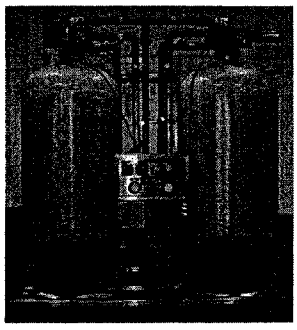

In general, water from the source well is pumped through a vessel, or series of vessels, containing the E33 media. As the water passes through the fixed media bed, the arsenic is reduced until the media reaches the adsorptive capacity. The spent media is then removed and disposed as a non-hazardous waste. Unlike several other BAT technologies, there is no chemical regeneration or flocculation, making the process simple and reliable, and reducing labor requirements. E33 has a high capacity for arsenic and enables long operating life (typically 6 to 36 months between media change-out), thus minimizing operational attention requirements.

1.2 General System Description

As briefly described in the preceding section, the APU arsenic removal process employs a fixed bed adsorption system using E33 media, or adsorbent, for dissolved arsenic adsorption. The APU process utilizes a simple pump-and-treat system that transports pressurized well water

Backwashing serves to remove media fines that have built up within the media and to fluff up, or reclassify, the compacted bed. This process maintenance step is the only procedure that generates a residual stream. The residual stream consists of approximately five to eight bed backwash volumes and only contains fine iron oxide particles. Based on site-specific backwash water data from operating systems, it has been determined that arsenic is not desorbed from the media, and little to no soluble arsenic is discharged as a result of this process step. Aside from periodic backwashing, there are no other steps required until the adsorbent becomes exhausted.

1.3 System Specifications

1.3.1 Introduction

The basic equipment specifications and design basis describe the following major APU elements: E33 adsorption media, valves, process controller, process vessels and internal components, flow meters and totalizers, pressure differential gauge, piping components, and optional backwashing system. Each of the major components is described below. Sizing parameters are also shown in the attached sizing and design basis worksheet.

1.3.2 Adsorption Media

Bayoxide E33 media is the industry standard for arsenic reduction that removes up to 99 percent of total arsenic, including both arsenic (III) and arsenic (V). E33 is also effective in reducing other heavy metals such as lead, cadmium, chromium, antimony, and molybdenum. E33 media has four to ten times the capacity of many other adsorption media and has been specifically designed for commercial and residential point of entry (POE) and small community systems to meet the new USEPA arsenic standard (i.e., 10 ppb). Developed in the mid-nineties, this ferric oxide-based product has been successfully used in large-scale drinking water applications since 1999. The new E33 media is discarded when spent and requires no chemicals or regeneration. For each system designed and installed, a calculated quantity of E33 media is used to achieve an empty bed contact time (EBCT) of about four minutes.

E33 provides cost-effective centralized arsenic treatment with a typical life of one to three years before replacement. (Note: AdEdge provides a calculation of the expected media life based on a regression model that incorporates other water-quality parameters in addition to arsenic concentration.) E33 media exhibits high operating capacity across a wide pH range, influent arsenic concentration, and flow rate. It is simple to apply in standard pressure vessel with typical flow rates of 10 to 300 gpm. Once the media is exhausted, E33 can be discarded as a non-hazardous waste (specific state requirements should be consulted). The media is easy to handle and can be stored and shipped dry. The following table presents the E33 technical specifications:

A cut sheet for the controller and a service document are contained in a subsequent section of this O&M manual. The cut sheet presents valve specifications, flow rates, regeneration (backwashing), meter information, dimensions, typical applications, and additional information.

1.3.4 Process Vessels and Internal Components

Primary components within the pressure vessels include the upper distributor, hub and lateral collection system, E33 media, and the underbedding media. The APU system utilizes either carbon steel or fiberglass composite vessels. The carbon steel vessels have an epoxy exterior coating and food-grade Tnemec epoxy interior coating. The carbon steel vessels normally range in size from several gpm up to 1,600 gpm. Maximum operating pressure and temperature for the carbon steel vessels are 100 pounds per square inch (psi) and 150^0 Fahrenheit (F), respectively. The carbon steel vessels have several openings including an 11-inch by 15-inch manway, a small 6-inch port at the bottom, and several pipe openings.

The composite vessels are constructed of fiberglass exterior and polyethylene interior shells. The vessels range in size from 12-inch to 60-inch diameter. Maximum operating pressure and temperature for the composite vessels are 120 pounds per square inch (psi) and 120^0 Fahrenheit (F), respectively. The composite vessels have either a 4-inch or a 6-inch opening at the top for loading the various media and accessing the internals to the tanks. Some composite tanks may have top and bottom ports. Specification sheets for the vessels are contained in the O&M manual. The specification sheets present design parameters, size specifications, recommended valving options, volumetric estimates, flange specifications, chemical resistance, and other relevant information.

Inlet, outlet, and drain piping all connect to the piping and control valves located on each vessel. Settings in the Fleck control valves or the electric-actuated valves allow the feed water to enter into the top of the vessel and to flow downward through the media. Treated water collects in the hub and spoke-type laterals on the bottom of the vessel, and then either travels up through the riser piping or out of the bottom of the vessels before exiting from the media. All APU adsorption systems are configured for down-flow operation.

A drainage layer consisting of fine ASTM grade quartz/gravel is used on the bottom of each vessel as an underbedding media. Several inches of this material are placed in the vessel to cover the laterals, which are slotted PVC piping for distributing or collecting the filtered water. An estimate of the gravel quantity in each vessel is provided in the design package. The appropriate quantity of E33P adsorption media is placed over this underbedding material. The underbedding gravel has a bulk density of approximately 100 pounds per cubic foot and the adsorption media bulk density is approximately 34 pounds per cubic foot.

1.3.7 Backwashing

Backwashing is initiated in one of three ways:

(a) based on the pre-set time on the control timer or PLC, or based on the number of gallons treated;
(b) based on a high pressure differential; and
(c) by manually initiating a backwash from the Fleck valve controller or the PLC.

The program can be designed for multiple backwash cycles. For these systems, three valve cycles are programmed: service flow, upflow backwash, and downflow rapid rinse. The program can be set to any number of days to automate this function. Typical intervals for backwash will be every 30 to 45 days. The two backwash related cycles typically consist of the following:

- Cycle 1: upflow for 15 minutes (default setting); and
- Cycle 2: downflow to backwash discharge (~ two to five minutes).

TAB B
PROCESS DECSRIPTION

TAB C
MEDIA INSTALLATION PROCEDURES

adedge

MEDIA INSTALLATION PROCEDURES

For AdEdge APU and Modular Treatment Systems Using Bayoxide E33 media

AdEdge Technologies, Inc. Bayoxide E33 adsorption products for water treatment are granular, dry, flowable materials designed for easy installation into conventional pressure filtration or adsorption equipment. Applications are operated in a down flow manner from top to bottom with the water inlet at the top of the vessel. Products are supplied in polyethylene or fiber drums, super sacks or other appropriate containers. *These procedures are intended to be general guidelines for media installation into AdEdge Adsorption Package Unit (APU) and Modular treatment systems. Details may vary based on the specific equipment available at each site and mode of media delivery. Installation should be performed only by AdEdge personnel or trained mechanical or water treatment professionals familiar with bulk media handling and AdEdge APU and Modular systems. Also consult procedures and detailed information provided in the user O&M Manual for reference.*

FILLING PROCEDURES

1) It is advisable to perform a hydraulic test of the system checking all connections, fittings and joints for leaks prior to loading media. Repair any leaks in the piping to and from the treatment unit before opening the vessels.

2) Disconnect and Remove valve/flange and distributor (if present) from top of each vessel to be filled with media. This may require removal of the valve and/or a section of piping which should be disconnected at the flanges.

3) If hydraulic testing is conducted initially, the vessels will need to be partially drained prior to media loading.

4) Before filling operation, inspect the internals of the adsorption vessel(s) to ensure the collection hub and lateral at the bottom of the tank(s) appear securely connected to the outlet/inlet ports and are in good condition and free of debris or obstructions that may hinder flow or performance. Remove debris or any foreign objects before proceeding. For certain installations, the laterals will have to be installed through the bottom flange.

5) Wear the appropriate safety equipment per the MSDS and Site Health and Safety Plan

6) Assemble the internal hub/laterals and riser pipe (PVC) and fit together according to the manufacturer's instructions (if not already installed inside the vessels). Be sure that all components are clean and free of obstructions or debris.

7) <u>Fill the vessels with 1/3-1/2 full of water before adding underbedding or adsorption media</u>. This is very important to reduce the potential for the gravel/media to damage the internal hub/lateral(s) inside the tank while filling and provide the proper conditioning of the media.

Notice: Suggestions and information is believed to be reliable. Information is offered in good faith with no warranties or implied warranties of merchantability or fitness for a particular purpose. Customer is responsible for determining whether use conditions and information in this document are appropriate for specific application and for ensuring compliance with applicable laws and regulations.

14) Once the appropriate amount of media is in the vessel, take a final measurement of the distance from the top of the media bed to the top of the tank (flange or distributor). Be sure that the vessels are not overfilled. Top off the vessel with water; allow the media to stand for a few minutes if possible to wet the material and eliminate entrapped air (which is the most common cause of pressure drop and channeling); re-secure the inlet flange and piping and tighten.

15) Before beginning water flow, be sure the backwash diaphragm valve (either on the unit or supplied) is partially closed. This valve is intended to both control flow rate during the initial media conditioning (backwashing) and will be set to a permanent setting to provide a maximum allowable flow rate when the vessels are put in service.

16) Using the controls on each vessel (one vessel at a time with the second vessel offline), manually backwash the media (upflow direction) for roughly 5-10 bed volumes at beginning at approximately 5-6 gpm per square foot of tank surface area and increase to 8-9 gpm per square foot very gradually. It is very important to begin at a low flow. AdEdge APU systems with an automatic control package will be programmed or pre-set for the appropriate time and gpm. AdEdge Modular systems will be preprogrammed as well. Some initial amber colored water and turbidity in the backwash water (first few bed volumes) is common due to the presence of fines that are evacuated. During the backwashing process, use the rubber mallet and lightly tap the sides of the vessel being backwashed to ensure that media will be fluidized and lift properly for conditioning.

17) The backwash water should become very clear with time. Two or more backwashing sequences may be required for each vessel to properly condition the media. Be careful to begin slowly and monitor the flow rate during backwashing to ensure that it is in the correct range for backwashing. High surges or excessive flow rates or pressure during backwashing can cause the adsorption media to be inadvertently evacuated out of the system through the backwash line. It is important that all fine particulate be evacuated from the vessels during this important conditioning step. Open bleed or sample valves during the initial flushing to also eliminate entrapped air in the vessel. Note: more than one initial backwash cycle may be needed to complete the conditioning step and obtain clear product water. Do not allow the water to flow in a service mode or forward downflow through the media / vessels (service mode) until backwashing has been completed and objectives achieved in that vessel.

18) After completing the backwash (water running clear), allow the suspended adsorbent media to re-settle. Then put the unit into a rinse cycle (forward flow) with the rinse going to the drain. Check the water for clarity; the water should be free of particulate or color after a minute or two. The adsorber is now ready to place into service. Check differential pressures across the vessels during normal service flow. Normal pressure drop across each vessel (which in includes the media and vessel components) at max

Notice: Suggestions and information is believed to be reliable. Information is offered in good faith with no warranties or implied warranties of merchantability or fitness for a particular purpose. Customer is responsible for determining whether use conditions and information in this document are appropriate for specific application and for ensuring compliance with applicable laws and regulations.

adedge

Safety Information Sheet

1.	**Identification of the substance/preparation and the company** **AD-33** Application: Adsorptive media for water treatment AdEdge Technologies, Inc. 3560 Financial Center Way Suite 5, Buford, GA 30519 (678) 835-0052
2.	**Composition/information on ingredients** FeOOH CAS-Nr. 20344-49-4
3.	**Hazards identification** The product is not hazardous to health or the environment according to EU criteria.
4.	**First-aid measures** In case of eye contact rinse with plenty of water. If irritation of the eyes persists, consult a doctor (opthamologist)
5.	**Fire-fighting measures** Extinguishing media: No restriction in fire situations
6.	**Accidental release measures** Take up mechanically; avoid dust formation For further disposal measures see chapter 13.
7.	**Handling and storage** Keep container dry and tightly closed in a cool and well ventilated place. VCI storage class: 13 (VCI = German Association of the chemical industry)
8.	**Exposure controls/Personal protection** Threshold value in air defined by TRGS 900 (MAK value): General limiting value of dust – 3 mg fine dust (measured as the alveolar aerosol content) per m3 of air. (See TRGS 900 for exemption provisions.) Wear suitable protective clothing, protective goggles and, if necessary, dust mask during work. Chemical-resistant protective gloves according to DIN/EN 374 are recommended. When handling observe the usual precautionary measures for dust-forming products.
9.	**Physical and chemical properties** Tested in accordance with

After final product withdrawal, all residues must be removed from containers (drip-free, powder-free or paste-free). Containers must be recycled in compliance with national legislation and environmental regulations.

14. Transport information

GGVSee/IMDG Code: -- UN No.: -- EmS: --
PG: -- MP: NO
GGVSE: Class -- PG: -- RID/ADR: Class -- PG: --
ADNR: Class -- PG: -- Cat -- ICAO/IATA-DGR: not restr.
Declaration for land shipment: --
Declaration for sea shipment: --
Declaration for shipment by air: --
Other information:
Not dangerous cargo. Keep separated from foodstuffs.

15. Regulatory information

No labeling is required in accordance with the EEC directives.

16. Other information

All components of this product are listed in the European Inventory of Existing Commercial Substances (EINECS) under the provisions laid down in the corresponding EEC-Directive.

Swiss law of poison: class of poison free; BAG-T-No. 698000.

The presented Safety Data Sheet has been altered.
The reason for the alteration is as follows:
Revised text (see chapter 6, 7, 8, 9, 10, 12, 13, 15 and 16)
Change to the TRGS (Technical Regulation on Hazardous Substances)
Classification 900 (see chapter 8)

The data given here is based on current knowledge and experience. The purpose of the Safety Data Sheet is to describe the products in terms of their safety requirements. The data does not signify any warranty with regard to the product's properties.

TAB D
NSF CERTIFICATION

NSF Live safer.™ Close wir exit NSF

NSF Product and Service Listings

These Listings were Last Updated on **Friday, January 13, 2006** at 4:15 AM Eastern Time. Please contact NSF International to confirm the status of any Listing, report errors, or make suggestions.

Warning: NSF is concerned about fraudulent downloading and manipulation of website text. If you have received this listing in hard copy, always confirm this certification/listing information by going directly to http://www.nsf.org/Certified/PwsComponents/Listings.asp?TradeName=bayoxide& for the latest most accurate information.

NSF/ANSI STANDARD 61
Drinking Water System Components - Health Effects

NOTE: Unless otherwise indicated for Materials, Certification is only for the Water Contact Material shown in the Listing. Click here for a list of Abbreviations used in these Listings.

Cert-Link® (Click here to visit this Company's Website)

LANXESS AG

RHEINUFERSTRASSE 7-9
BUILDING 54
KREFELD, 47812
GERMANY
49 2151 88 3790

Facility : KREFELD, GERMANY

Process Media

Trade Designation	Size	Water Contact Temp	Water Contact Material
Adsorption			
Bayoxide E33 P	0.5 mm - 2 mm	CLD 23	FEOH
Bayoxide E33	0.5 mm - 2 mm	CLD 23	FEOH

NOTE: Certified for water treatment plant applications.
This product has not been evaluated for point of use applications.

Number of matching Manufacturers is 1

CERTIFICATE OF COMPLIANCE

All WellMate water system pressure vessels are manufactured in compliance with stringent Quality Control procedures and test requirements throughout the manufacturing process. All procured raw materials and components are accepted only with material and or manufacturing certifications from the supplier. In addition, sampling inspections are performed as part of our receiving inspection procedures.

Our final Quality Control testing consists of a 100% inspection for aesthetics and proper labeling, as well as high pressure testing for water leaks and air cell air loss. Warehouse audits are performed by the Quality Department to ensure compliance. To further ensure the integrity of our products, representative samples are periodically selected from production and are subjected to destructive hydrostatic burst testing with a minimum requirement of five (5) times the vessel operating pressure. In addition, random cyclic testing is conducted at a pressure differential of 20 - 125 PSIG for a minimum of 250,000 cycles.

WellMate's 16" residential models have been tested and certified by NSF International (National Sanitation Foundation) and comply with The American National Standards Institute ANSI / NSF Standard 61 for Drinking Water System Components - Health Effects. Furthermore, all WellMate products are manufactured using only NSF and/or FDA listed materials for any component that comes in direct contact with potable water.

NSF is an independent not-for-profit organization that is certified by the American National Standards Institute (ANSI) for providing third-party services through programs which focus on public health and environmental quality. ANSI is the official United States representative to the two major international non-treaty standards organizations; The International Organization for Standardization (ISO) and The International Electrotechnical Commission (IEC).

Pentair
Water Treatment

Industrial Parkway • Chardon, Ohio 44024-1093
(440) 286-4116 • FAX (440) 286-7145

September 19, 2002

Certificate of Compliance
NSF and FDA Compliance

All Water Treatment Pressure Vessels manufactured by Pentair Water Treatment are constructed in compliance with a strict set of manufacturing procedures and test requirements. To ensure the integrity of these products, representative samples are periodically selected from production to undergo destructive testing.

All vessels are tested and certified by NSF International (National Sanitation Foundation) and comply with American National Standards Institute ANSI/NSF Standard 44 for our Integrity Requirements. All products undergo Toxicological Evaluation by NSF to assure that no harmful materials will contact the drinking/processed water. In addition, all wetted components are manufactured from FDA 21CFR approved materials.

NSF is an independent organization certified by the American National Standards Institute for its third party Certification Program of Systems and Components. NSF tests and certifies products in the water treatment industry in the United States and throughout the world. ANSI is the official United States representative to the two major international non-treaty standards organization, the International Standards Organization (ISO) and the International Elector Technical Commission (EIC).

This letter serves as a Certificate of Compliance that the water treatment pressure vessels manufactured by Pentair Water Treatment meet the above requirements.

Sincerely,

Tammy Stanziale
QA Manager

TAB E
ADSORPTION VESSEL LITERATURE

Composite Vessels

The non-corrosive, cost-effective solution for commercial / industrial water treatment and storage.

Structural Composite pressure vessels offer composite fiberglass construction for outstanding performance and durability in harsh chemical environments. With capacities up to 1600 gallons and a variety of options, we can tailor a vessel to meet your needs. All Structural Composite vessels are warranted for 5 years.

LIMITED 5 YEAR WARRANTY

All Composite tanks are warranted to be free from defects in materials and workmanship for a period of 5 years from the date of manufacture if the vessel is operated within the prescribed pressure and temperature ratings stated on the tank label.

Not covered by this warranty is damage resulting from freezing, external impact, chemical attack from liquid and gasses, exposure to vacuum, natural disasters, or other applications of the product beyond residential water softeners and filters.

Material of construction

Inner shell material:
Polyethylene

Operating parameters

Maximum operating pressure: 150 psi

Maximum operating temperature: 150° F

Design parameters – Pentair

Safety factor:
4:1 (Minimum burst at 600 psi)

Cycle test:
250,000 cycles without leakage

Design parameters – NSF

Safety factor:
4:1 (Minimum burst at 600 psi)

Cycle test:
100,000 cycles without leakage

Design parameters – ASME

Safety factor:
5:1 Top/bottom flange
(Minimum burst at 750 psi)
6:1 Side flange (Minimum burst at 900 psi)

Cycle test:
33,000 cycles without leakage
(Top/bottom flange)
100,000 cycles without leakage
(Side flange)

ASME

Composite Vessels

	Part No.	Description	Height w/ base Inches / mm	Height w/o base Inches / mm	Capacity Gallons / Liters	Cubic Feet	Top Open	Bottom Open	Top Side	Bottom Side	Base	Ship Weight
48" Diameter	31281	48 x 72	92.1 / 2339	76.0 / 1930	463 / 1753	61.9	6" FLG	N/A	N/A	N/A	tripod	780
	31285	48 x 72	92.1 / 2339	77.0 / 1955	463 / 1753	61.9	6" FLG	6" FLG	N/A	N/A	tripod	780
	31647	48 x 72	93.8 / 2383	78.0 / 1981	463 / 1753	61.9	16" MWY	6" FLG	N/A	N/A	tripod	780
	31283	48 x 72	96.1 / 2441	80.8 / 2052	463 / 1753	61.9	6" FLG	6" FLG	4" FLG	4" FLG	tripod	780
	31432	48 x 72	97.5 / 2477	81.7 / 2075	463 / 1753	61.9	16" MWY	6" FLG	4" FLG	4" FLG	tripod	780
63" Diameter	31390	63 x 67	79.5 / 2324	67.0 / 1702	600 / 2271	80.2	6" FLG	6" FLG	N/A	N/A	tripod	900
	Call Factory	63 x 67	79.5 / 2324	67.0 / 1702	600 / 2271	80.2	10" FLG	6" FLG	N/A	N/A	tripod	*
	31290	63 x 67	80.3 / 2344	67.8 / 1722	600 / 2271	80.2	16" MWY	6" FLG	N/A	N/A	tripod	900
	32008	63 x 67	80.3 / 2344	67.8 / 1722	600 / 2271	80.2	16" MWY	10" FLG	N/A	N/A	tripod	900
	31326	63 x 86	96.6 / 2758	84.1 / 2136	850 / 3218	114	6" FLG	6" FLG	N/A	N/A	tripod	1425
	32678	63 x 86	96.6 / 2758	84.1 / 2136	850 / 3218	114	6" FLG	6" FLG	4" FLG	4" FLG	tripod	1425
	32253	63 x 86	96.6 / 2758	84.1 / 2136	850 / 3218	114	10" FLG	6" FLG	N/A	N/A	tripod	1200
	31327	63 x 86	97.0 / 2769	84.5 / 2146	850 / 3218	114	16" MWY	6" FLG	N/A	N/A	tripod	1200
	31292	63 x 86	97.0 / 2769	84.5 / 2146	850 / 3218	114	16" MWY	6" FLG	4" FLG	4" FLG	tripod	1425
	32356	63 x 86	97.0 / 2769	84.5 / 2146	850 / 3218	114	16" MWY	10" FLG	N/A	N/A	tripod	1425
	32500	63 x 116	128.5 / 3264	116.0 / 2946	1250 / 4732	167	16" MWY	6" FLG	N/A	N/A	tripod	1425
	31325	63 x 116	128.5 / 3264	116.0 / 2946	1250 / 4732	167	16" MWY	6" FLG	4" FLG	4" FLG	tripod	1775
	Call Factory	63 x 116	128.5 / 3264	116.0 / 2946	1250 / 4732	167	16" MWY	10" FLG	N/A	N/A	tripod	*
	31456	63 x 144	158.5 / 4026	146.0 / 3708	1600 / 6057	214	16" MWY	6" FLG	N/A	N/A	tripod	2025
	31607	63 x 144	158.5 / 4026	146.0 / 3708	1600 / 6057	214	16" MWY	6" FLG	4" FLG	4" FLG	tripod	2025
	31664	63 x 144	158.5 / 4026	146.0 / 3708	1600 / 6057	214	16" MWY	10" FLG	N/A	N/A	tripod	2025

*Measurements are subject to change without notice and are for reference only.

Color Options: AL - Almond, BL - Blue, BK - Black, GR - Gray, NA - Natural

NOTE: See flex connection and vacuum breaker information on page 13.

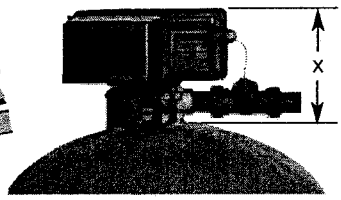

Installation Tips:

- Bolt base to floor
- Calculate height for valve and base combined (see photo)

Fleck Valve	Tank Dia. Inches / mm	Adder Ht. (X) Inches / mm
2750	18 / 457	6.5 / 165
2850	21 / 533	6.5 / 165
2900	24, 30 / 610, 762	12 / 305
2930	36 / 914	13 / 330
3150	42 / 1067	10 / 254
3900	48-63 / 1219-1600	15 /381

Composite Vessels

Top and Bottom Opening Threads

Size	Composite/ Polyglass	Number of Full Threads	Composite
2.5"-8" NPSM	6	3 min	6
4"-8" UN	7	3 min	7
4.5"-8" Buttress	7	3 min	7

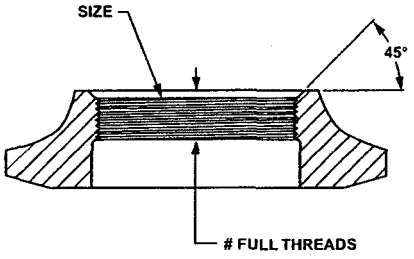

Top and Bottom Opening Flanges/Manway

Size	L	I.D.	B.C.	O.D.	A Bolt Dia.	Number of Holes	Weight (lbs.)
6" SNA	3.6"	5.9"	8.5"	9.4"	0.31"	12	5.8
10" ANSI	3.7"	10.0"	14.3"	16.0"	0.88"	12	17.8
16" Manway SNA	4.3"	16.0"	20.4"	21.3"	0.50"	24	34.0

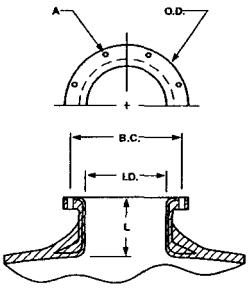

Manway Cover

Material	Pressure Rating	Tapping
CPVC	100 psi	As requested
VE	150 psi	As shown only

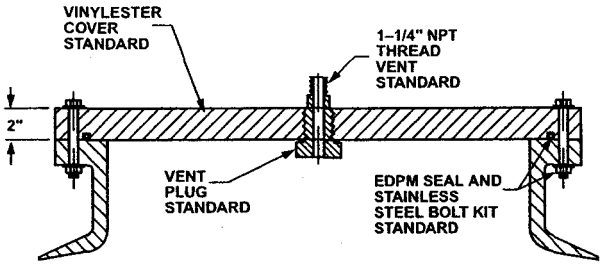

Side Flange

Size	L	I.D.	B.C.	O.D.	B Bolt Dia.	Number of Holes	Weight (lbs.)
4" ANSI	4.1"	4.0"	7.5"	9.0"	0.63"	8	6.4

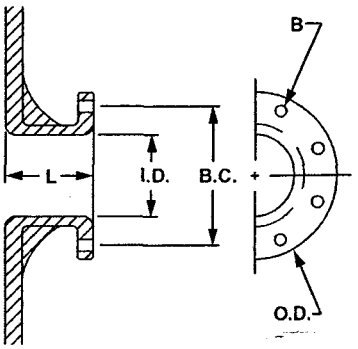

Composite Vessels

Instructions: Circle or fill in appropriate data. Fax sheet to
Pentair Water Treatment (440-286-9673 or 1-800-942-7659) for a quote.

Units	English or Metric	Circle or fill in appropriate data					
Pressure	PSI or kPa	min.		max.			
Temperature	°F or °C	min.		max.			
Liner Material		PE					
Volume	Gallons or Liters						
Height Constraint (H)	Inches or mm						
Width Constraint (W)	Inches or mm						
Pressure Vessel Diameter	Inches	12"	13"	14"	16"	18"	21"
		24"	30"	36"	42"	48"	63"
Pressure Vessel Length	Inches or mm	For standard lengths, refer to Specification pages.					
Top Opening	A1	2.5" NPSM	4"-8" UN	4.5"-8" Buttress	6" SNA Flange	10" ANSI Flange	16" SNA Manway
Bottom Opening	A2	2.5" NPSM	4"-8" UN	4.5"-8" Buttress	6" SNA Flange	10" ANSI Flange	16" SNA Manway
Side Top Opening	A3	36" 48" 63" Diameter Only			4"		
Side Bottom Opening	A4	36" 48" 63" Diameter Only			4"		
Distributor - Top		Diffuser		High Flow			
Distributor - Side Top		Diffuser		High Flow			
Distributor - Side Btm.		Hub & Lateral		Fishbone		High Flow	
Distributor - Bottom		Hub & Lateral		Fishbone		High Flow	
Pressure Vessel Base		None	Standard	Extended	Tripod		
Flange Covers		VE	CPVC	Noryl	Other :		
O-Ring Material		EPDM	VITON	Other :			
Vessel Contents		Please list.					
Pressure Vessel Color		Natural	Almond	Blue	Black	Gray	
Vessel Quantity		Number of Units :					
ASME Code		Yes	No				

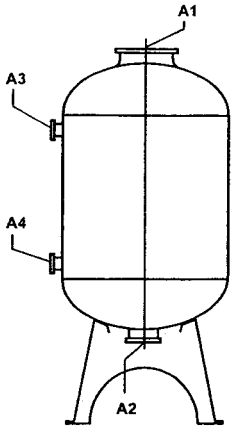

Bajonet™ Distribution Systems

Diameter (Inches)	Top Open	Part No. Composite	Part No. FRP	System Connection	Flow Rate (GPM)
13	4"-8"	5665	5688	1.5" Slip	29
14	4"-8"	5665	5688	1.5" Slip	29
16	4"-8"	5665	5688	1.5" Slip	29
18	4"-8"	5666	N/A	1.5" Slip	29
21	4"-8"	5666	5666	1.5" Slip	29
24	4"-8"	5667	5667	1.5" Slip	29
30	4" or 6"-8"	10848	5673	1.5" Slip	104
36	4" or 6"-8"	10849	5674	1.5" Slip	104

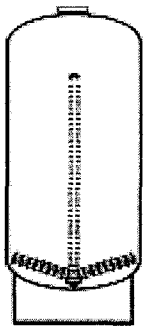

Riser tube not included

Top Mount - 3" Riser Tube, 8 Laterals

Diameter (Inches)	Top Open	Part No. Composite	Part No. FRP	System Connection	Flow Rate (GPM)
24	6" FLG	12201	N/A	3" Slip	104
30	6" FLG	5672	N/A	3" Slip	104
36	6" FLG	5673	N/A	3" Slip	104
42	6" FLG	5674	N/A	3" Slip	104
48	6" FLG	5675	N/A	3" Slip	104
63	6" FLG	13492	N/A	3" Slip	104

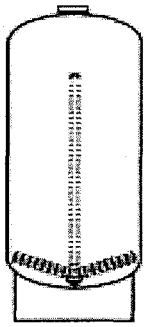

Riser tube not included

Top Mount High Flow - 3" Riser Tube, 16 Laterals

Diameter (Inches)	Top Open	Part No. Composite	System Connection	Flow Rate (GPM)
30	6" FLG	11776	3" Slip	173
36	6" FLG	11778	3" Slip	173
42	6" FLG	5676	3" Slip	173
48	6" FLG	5677	3" Slip	173
63	6" FLG	13569	3" Slip	174

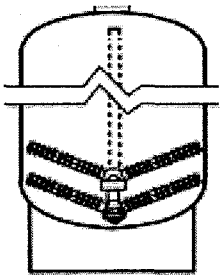

Riser tube not included

Threaded Top/Bottom Mount Diffuser

Diameter (Inches)	Top Open	Part No. Composite	Part No. FRP	System Connection	Flow Rate (GPM)
12-36	4"-8"	5671	5671	2" Slip	88

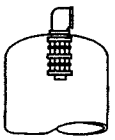

Bajonet™ Distribution Systems

Bottom Mount High Flow

Diameter (Inches)	Bottom Open	Part No. Composite	System Connection	Flow Rate (GPM)
36	6" FLG	11892	3" FNPT	167
42	6" FLG	11663	3" FNPT	167
48	6" FLG	11665	3" FNPT	167
63	6" FLG	14248	3" FNPT	175

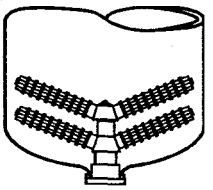

Bottom Mount Fishbone

Diameter (Inches)	Bottom Open	Part No. Composite	System Connection	Flow Rate (GPM)
63	6" FLG	5687	3" FNPT	170

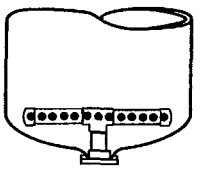

Combination Kit 63" Top Side Inlet/Bottom Outlet

Size (Inches)	Bottom Opening	Top Opening	Top Side	Part No.	Side System Connection	Bottom System Connection
63 x 86	6" FLG	16" MWY	4" FLG	11190	3" MNPT	3" FNPT
63 x 116	6" FLG	16" MWY	4" FLG	11192	3" MNPT	3" FNPT
63 x 144	6" FLG	16" MWY	4" FLG	11194	3" MNPT	3" FNPT

Upper Flow Rate 130 GPM
Lower Flow Rate 170 GPM

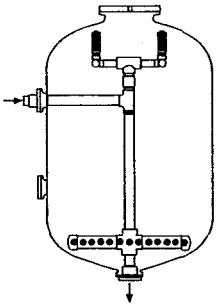

Combination Kit 63" Top Side Inlet/Bottom Side Outlet

Size (Inches)	Bottom Opening	Top Opening	Top Side	Bottom Side	Part No.	Side System Connection	Bottom System Connection
63 x 86	6" FLG	16" MWY	4" FLG	4" FLG	11191	3" MNPT	3" FNPT
63 x 116	6" FLG	16" MWY	4" FLG	4" FLG	11193	3" MNPT	3" FNPT
63 x 144	6" FLG	16" MWY	4" FLG	4" FLG	11195	3" MNPT	3" FNPT

Upper Flow Rate 130 GPM
Lower Flow Rate 170 GPM

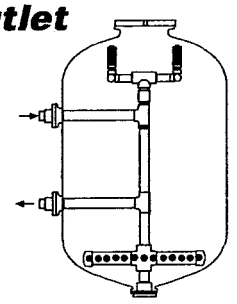

Note: Flow rates calculated with a 5 psi pressure drop.

Contents Page

Receiving 3

Basic Handling Rules 4

Approved Lifting Methods 8

Installing Pressure Vessel with Fiberglass Base .10

Flange Cover Assembly and Torque Ratings 12

Side Flange Support Strength 14

UV Protection 15

Vacuum Protection Flex Connectors 16

Flexibility in Piping 17

Vertical Base Removal and Replacement 19

Install the New Base 21

BASIC HANDLING RULES

This guide is designed to help install pressure vessels properly. Improper handling or installation can result in damage or pressure vessel failure.

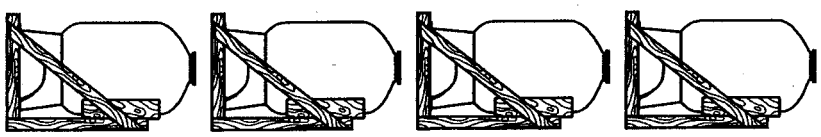

1. If pressure vessels are being stored prior to installation, leave them in their **protective shipping skid** until ready to install.

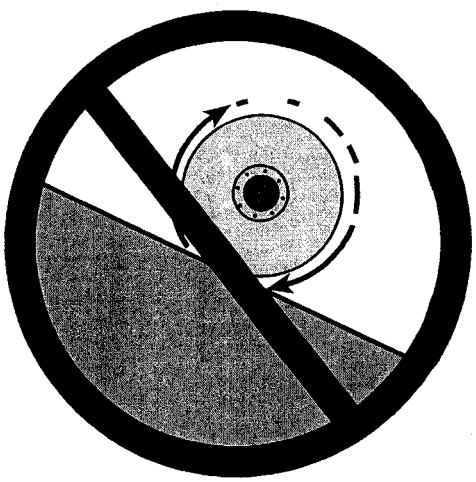

2. **Never roll or slide** a pressure vessel on its side.

BASIC HANDLING RULES
continued

5. Operators of hoist equipment must follow **proper rigging** procedures.

6. **Avoid** use of hooks or equipment on the **inside** of the pressure vessel.

APPROVED LIFTING METHODS

By Flange

The empty pressure vessel is lifted by placing a user-supplied, webbed nylon reinforced sling, Penco, or rated steel cable around the top flange. Sling must be rated at minimum of 10,000 lbs. (4,500 kg). **CAUTION:** Steel cable must have protective coating to prevent scratching of the flange's Teflon coating.

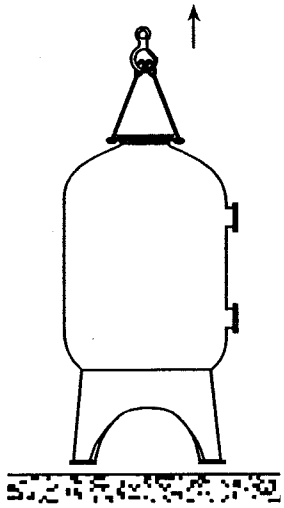

By Lift Strap

Attach a 1/2" (12.7 mm) thick, user-supplied steel lift strap to the top flange, using at least two (2) holes per side. Then connect to a rated (10,000 lbs.; 4,500 kg min.) eyehook and cable.

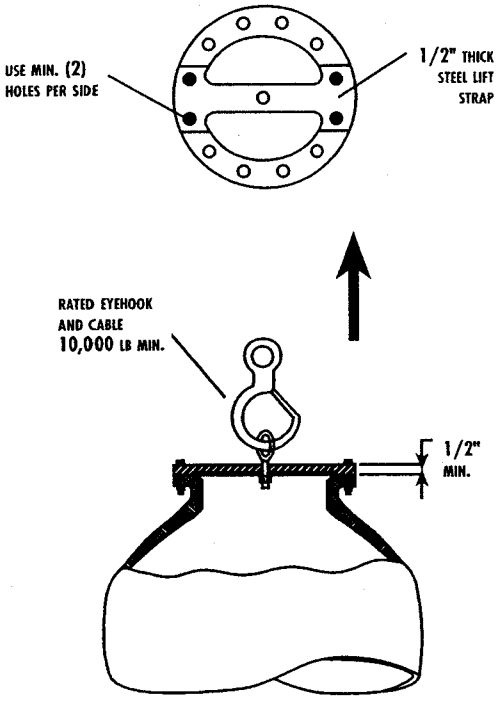

INSTALLING PRESSURE VESSEL WITH FIBERGLASS TRIPOD OR SKIRT BASE

To prevent breakage of the Fiberglass base, the following procedure is recommended for handling, unloading, and installing these pressure vessel types.

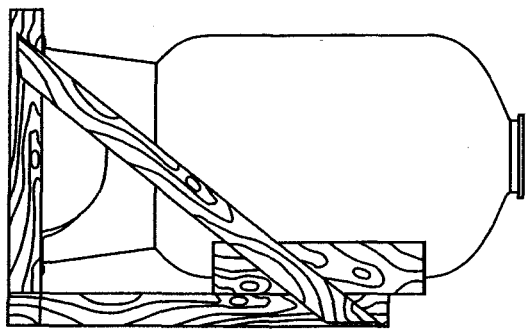

1. When delivered, the pressure vessel and skid may be in a horizontal position. The first step is to **stand the whole assembly upright.** All precaution described earlier should be observed to protect the pressure vessel from damage.

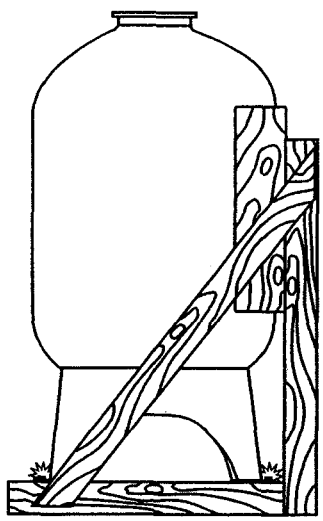

2. When the pressure vessel and skid are upright, **remove the lag bolts** which are holding the skid to the base of the pressure vessel.

FLANGE COVER ASSEMBLY AND TORQUE RATINGS

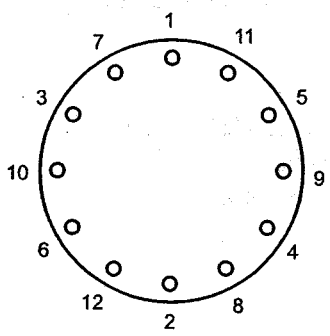

12-bolt Flange Cover (6", 152 mm Flange)
Tightening Sequence for 5/16" (7.9 mm)
Stainless Steel Bolts
Torque to 11 ft.-lbs. (15 NM)

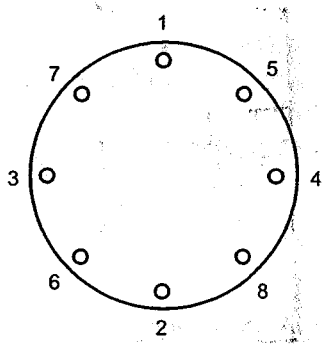

8-bolt Flange Cover (4-1/2", 114 mm Flange)
Tightening Sequence for 3/4" (19 mm)
Stainless Steel Bolts
Torque to 130 ft.-lbs. (176 NM)

SIDE FLANGE SUPPORT STRENGTH

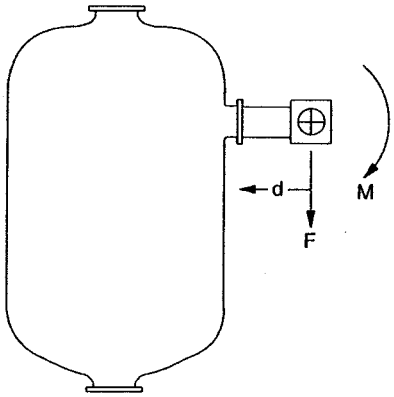

Valves, piping and hardware all contribute to the weight loads put on side flanges.
Side flanges are rated for a bending torque, M, maximum of 50 ft. lbs. This means that:

d x F must be ≤ 50 ft. lbs

For d = 1 ft., Fmax. = 50 lbs.

Where d = distance in feet from flange face to center of the load (such as a valve)
Fmax. = maximum support load in pounds

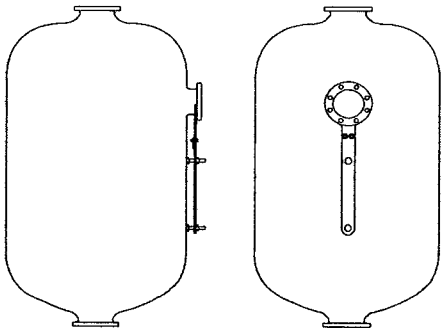

To support greater loads, a support kit, No. 12647, is available for upper side flanges only. With the support kit, the side flange is rated for a bending torque, M, of 300 ft. lbs.

Thus, for d = 1 ft.,
Fmax. = 300 lbs.

Note: Lower side flanges not available when upper side flange support kit is used.

VACUUM PROTECTION FLEX CONNECTORS

The pressure vessel is rated for an internal negative pressure of 5" Hg (17 Pa) vacuum below atmospheric. If negative pressure could ever exceed 5" Hg (17 Pa), an adequate vacuum breaker must be installed between the pressure vessel inlet and any valves, as shown here.

System connections to the pressure vessel must accommodate vertical expansion between side, top, and bottom openings. Either flexibility in piping, as shown on pages 22 and 23, or flex connectors as shown here, are recommended.

Flex connectors and Vacuum Breakers are available from Structural Please consult **accessory catalog.** Contact
Customer Service; Tel: 440-286-4116

NOTICE

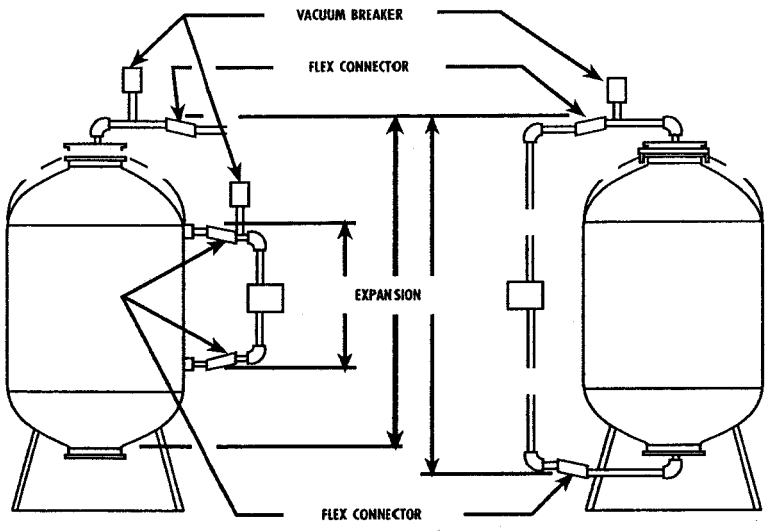

FLEXIBILITY IN PIPING (continued)

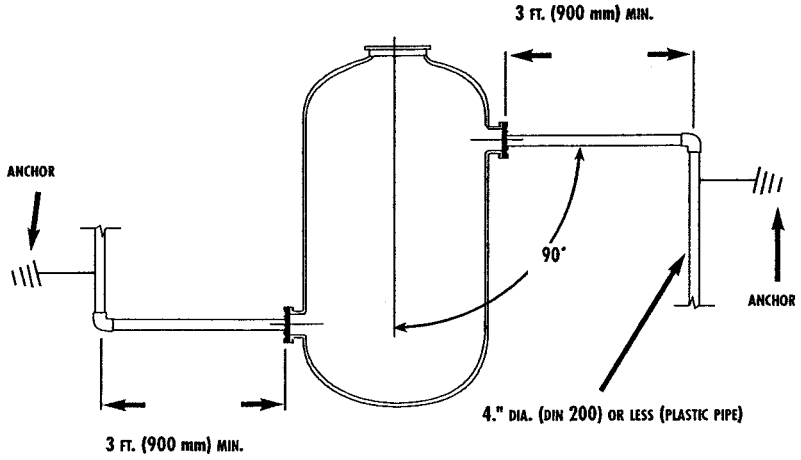

The figures shown here are the acceptable minimum for the pressure vessel at its rated pressure of 150 psig. When using the pressure vessel at a lower pressure, the minimum pipe run length can be reduced, using this formula:

a. Multiply pressure vessel pressure in psi x 36
b. Divide above by 150
c. Result is minimum span of horizontal piping in inches

For example, if the pressure vessel pressure is 120 psi:

a. 120 x 36 = 4,320
b. 4,320 divided by 150 = 28.8
c. Minimum span of horizontal piping is 29 inches

VERTICAL BASE REMOVAL AND REPLACEMENT (continued)

1. Drive a wooden wedge between the pressure vessel and the base with the rubber hammer to create an opening to insert the saw blade. If necessary, use the second wooden wedge to make an opening for the saw blade. Have the saw blade teeth toward your hand so that you cut the adhesive with a pulling motion rather than a pushing motion. **Use extreme caution** to avoid injury when performing this step.

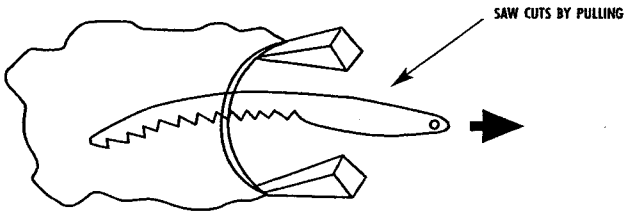

NOTE: **Use extreme caution** to avoid damaging fibers. If fibers are damaged, pressure vessel must **not** be used.

2. As the adhesive is being cut, the wedges must be moved (around the outer diameter of the base) to maintain a gap between the pressure vessel and the base to allow the saw blade to cut the adhesive without getting bound up.

3. After the base is removed, the heavy excess adhesive on the pressure vessel must be removed. Be careful. Do not damage exterior surface of the pressure vessel. It is not necessary to remove all of the old adhesive, but just the heavy excess to allow room for the fresh adhesive. Take your time, the base was installed for the life of the pressure vessel, so it may take a great deal of effort and patience to remove the old base without damaging the pressure vessel.

BASIC HANDLING RULES

Never roll or slide a pressure vessel on its side.

Never drop a pressure vessel or allow **hard impact or abrasion** of the pressure vessel from contact with walls, partitions, tools, or equipment.

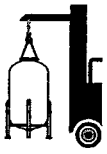

Hoist operators must follow **proper rigging** procedures.

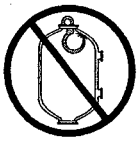

Avoid use of hooks or equipment on the **inside** of the pressure vessel.

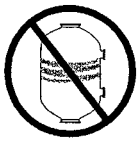

Never fasten **cables or chains** around pressure vessel. Use canvas or nylon straps to avoid damage to the flange area.

STRUCTURAL

The Leader in Composite Pressure Vessel Technology
Industrial Parkway • Chardon, OH 44024 U.S.A.
Tel: 440-286-4116

© 1997 Structural
Part No. 11967-A
Rev. 10/97

EXHIBIT F **WATER DISTRIBUTION SYSTEM (CONSTRUCTION DRAWINGS)**

TAB F
CONTROL VALVES

Model 3150

2" Control Valve

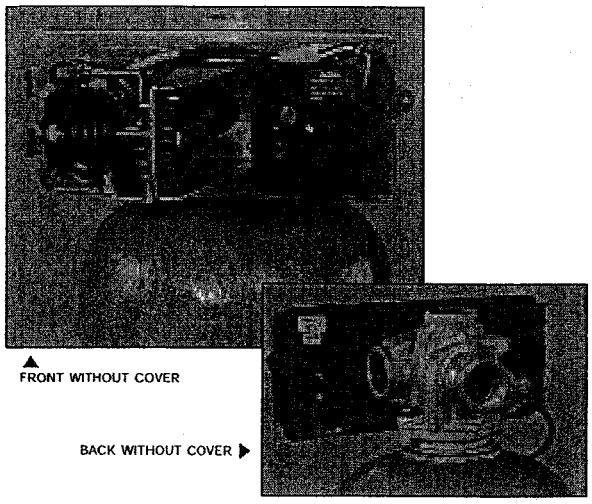

▲ FRONT WITHOUT COVER

BACK WITHOUT COVER ▶

Product Features

- Fully adjustable 5-cycle control is efficient and reliable; delivers controlled upflow backwash, downflow brining and downflow service
- Versatile top or side mounting suitable for commercial or industrial applications
- Backwash capacity accommodates tanks up to 60" diameter
- Solid lead-free brass construction for superior strength and durability
- Protective NEMA 3R equivalent enclosure is water resistant, rain tight, corrosion resistant and UV stable
- Flexible 7 or 12 day time clock or meter initiated regeneration

Options

- Backwash filter
- Meter initiated regeneration
- Service valve operator
- Side mount
- Electronic timer, ET or Systemax
- Hot water (time clock 180°F; metered valve 150°F)
- Manual operation
- No hard water bypass piston
- Upflow regeneration
- Auxiliary switch

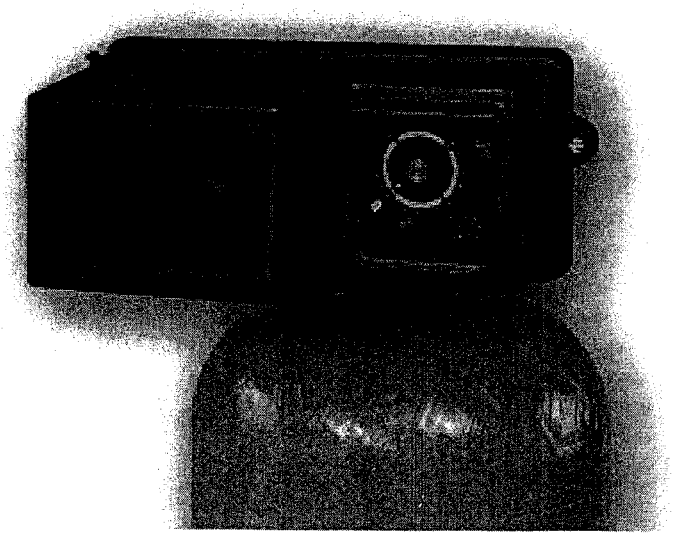

Valve Specifications

Valve material	Lead-free brass*
Inlet/Outlet	2" NPTF
Cycles	5

Flow Rates (50 psi Inlet) - Valve Alone

Flow rate (50 psi inlet)	Top mount	Side mount
Continuous (15 psi drop)	95 GPM	100 GPM
Peak (25 psi drop)	124 GPM	129 GPM
CV (flow at 1 psi drop)	24.8	25.9
Max. backwash (25 psi drop)	105 GPM	109 GPM

Regeneration

Downflow/Upflow	Both
Adjustable cycles	Yes
Time available	Electromechanical: 164 minutes ET: 0 - 999.9 minutes Systemax: 0 - 999.9 minutes

Meter Information

Meter accuracy range	3 - 150 GPM +/- 5%
Meter capacity range (gal.)	Standard: 1,250 - 21,250 Extended: 6,250 - 106,250 ET: 1 - 9,999,999 Systemax: 1 - 99,999,999

Dimensions

Distributor pilot	2.375" O.D. (2" pipe)
Drain line	2" NPTF
Brine line	1" NPTM
Mounting base	Top mount: 4" - 8 UN
Height from top of tank	10"

Typical Applications

Water softener	24"-63" diameter
Iron filter	24"-42" diameter
Sediment filter	24"-42" diameter
Carbon filter	24"-42" diameter
Neutralizing filter	24"-42" diameter

Additional Information

Injector brine system	1" - 1800
Electrical rating	24 v, 110 v - 50 Hz, 60 Hz
Max VA	87
Estimated shipping weight	Time clock: 39 lbs. Metered valve: 46 lbs.
Pressure	Hydrostatic: 300 psi Working: 20 - 125 psi
Temperature	34° - 110° F

*As defined in the Safe Drinking Water Act.

MODEL 3150 Downflow

Job Specification Sheet

- JOB NO. _____
- *MODEL NO. _____
- WATER TEST _____
- CAPACITY PER UNIT _____
- MINERAL TANK SIZE DIA._____HEIGHT_____
- BRINE TANK SIZE &
  SALT SETTING PER REGENERATION: _____

* CONTROL VALVE SPECIFICATIONS

1) Type of Timer (see pages 16, 17, & 18)
   - A) 7 day or 12 day
   - B) * 1,250 to 21,250 gallon meter or
     * 6,250 to 106,250 gallon meter or
     * Other _____
   - C) Meter Wiring Package
     1) System #4 - 1 tank; 1 meter; immediate or delayed regeneration
     2) System #5 - 2 tanks; 2 meters; interlock
     3) System #6 - 2 tanks; 1 meter; series regeneration
     4) System #7 - 2 tanks; 1 meter; alternator
2) Timer Program Settings
   - A) Backwash _____min.
   - B) Brine & Slow Rinse _____min.
   - C) Rapid Rinse _____min.
   - D) Brine Tank Refill _____min.
3) Drain Line Flow Controller _____gpm
4) Brine Line Flow Controller _____gpm
5) Injector Size # _____
6) Service Valve Operation Units (SVO)
   Size of Service Valve _____

Printed in U.S.A.

MODEL 3150 Downflow

Water Conditioner Flow Diagrams

1 SERVICE POSITION

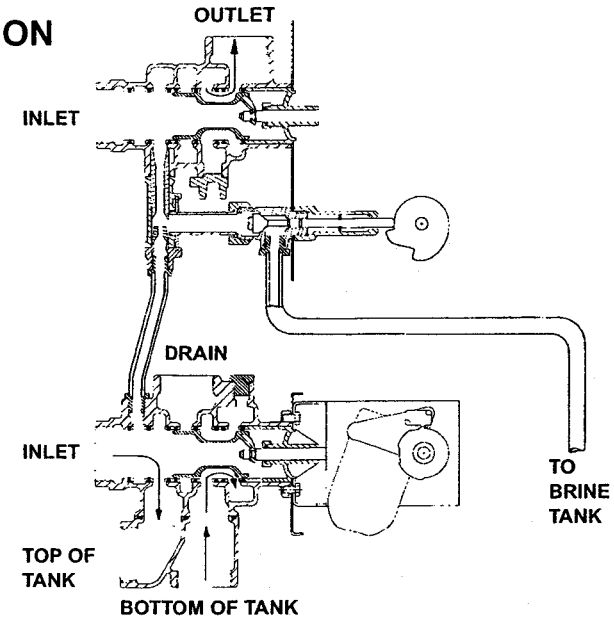

Hard water enters at valve inlet — flows thru valve to the top of tank — down thru mineral to the bottom distributor. Conditioned water flows to the valve, around the piston and out the outlet.

2 BACKWASH POSITION

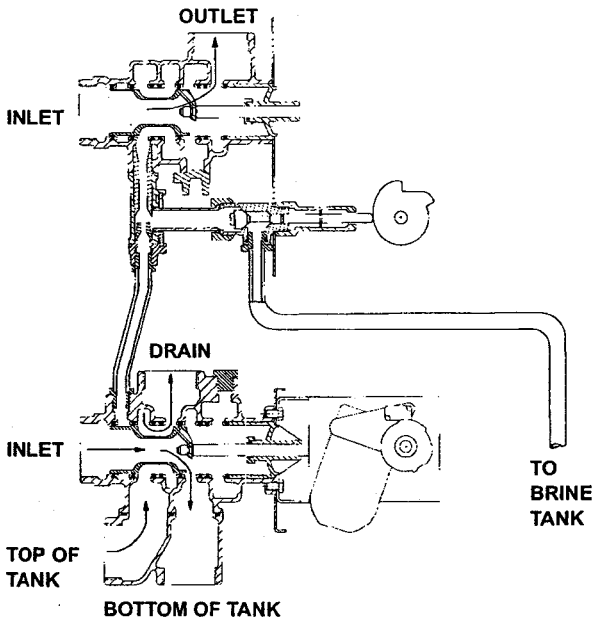

Hard water enters at valve inlet — flows thru valve to the bottom of tank — up thru mineral to top of tank, around the piston and out the drain. Hard water is also available at valve outlet.

3 BRINE AND SLOW RINSE POSITION

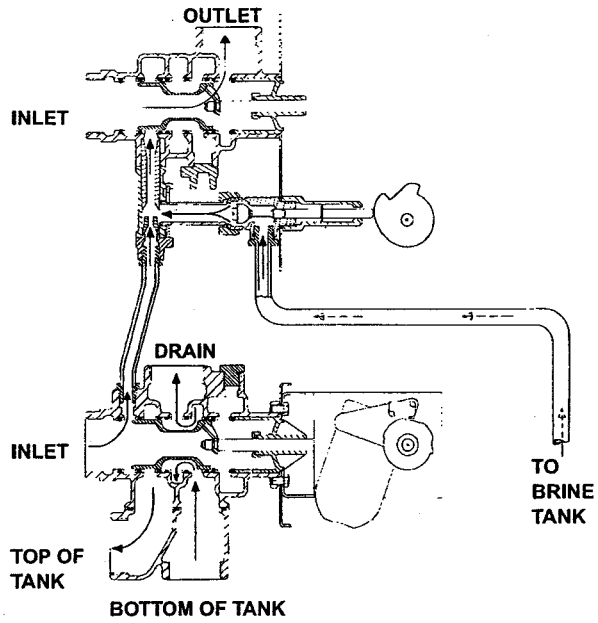

Hard water enters at valve inlet — flows thru injector nozzle and throat to draw brine from the brine tank — brine flows thru valve to the top of tank — down thru mineral to bottom distributor — back to the valve, around the piston and out the drain. Flow thru injectors continues for slow rinse for remainder of cycle. Hard water is also available at valve outlet.

Printed in U.S.A.

MODEL 3150 Downflow

Control Valve

(see opposite page for parts list)

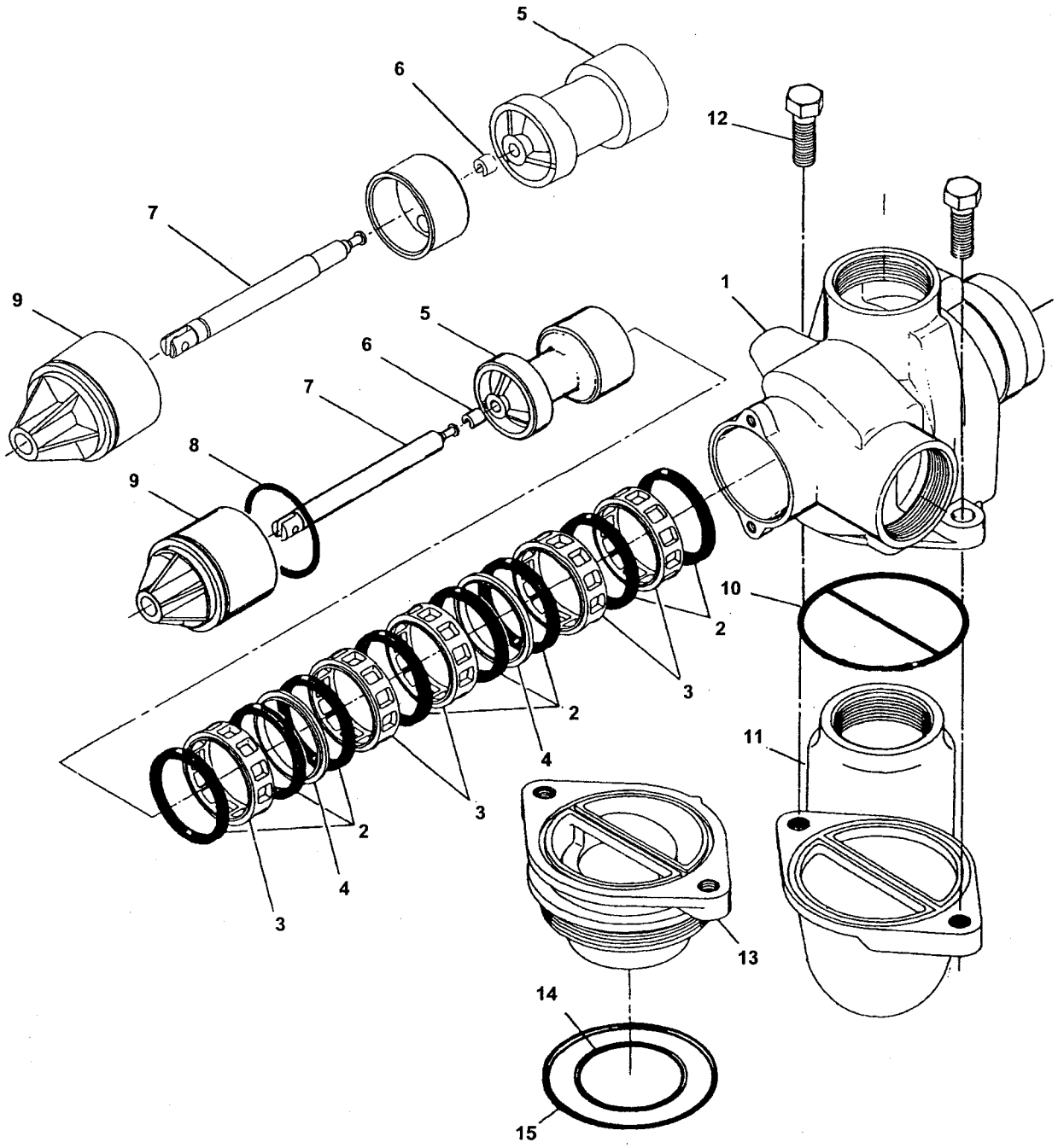

Printed in U.S.A.

MODEL 3150 Downflow

Control Drive Assembly

(see opposite page for parts list)

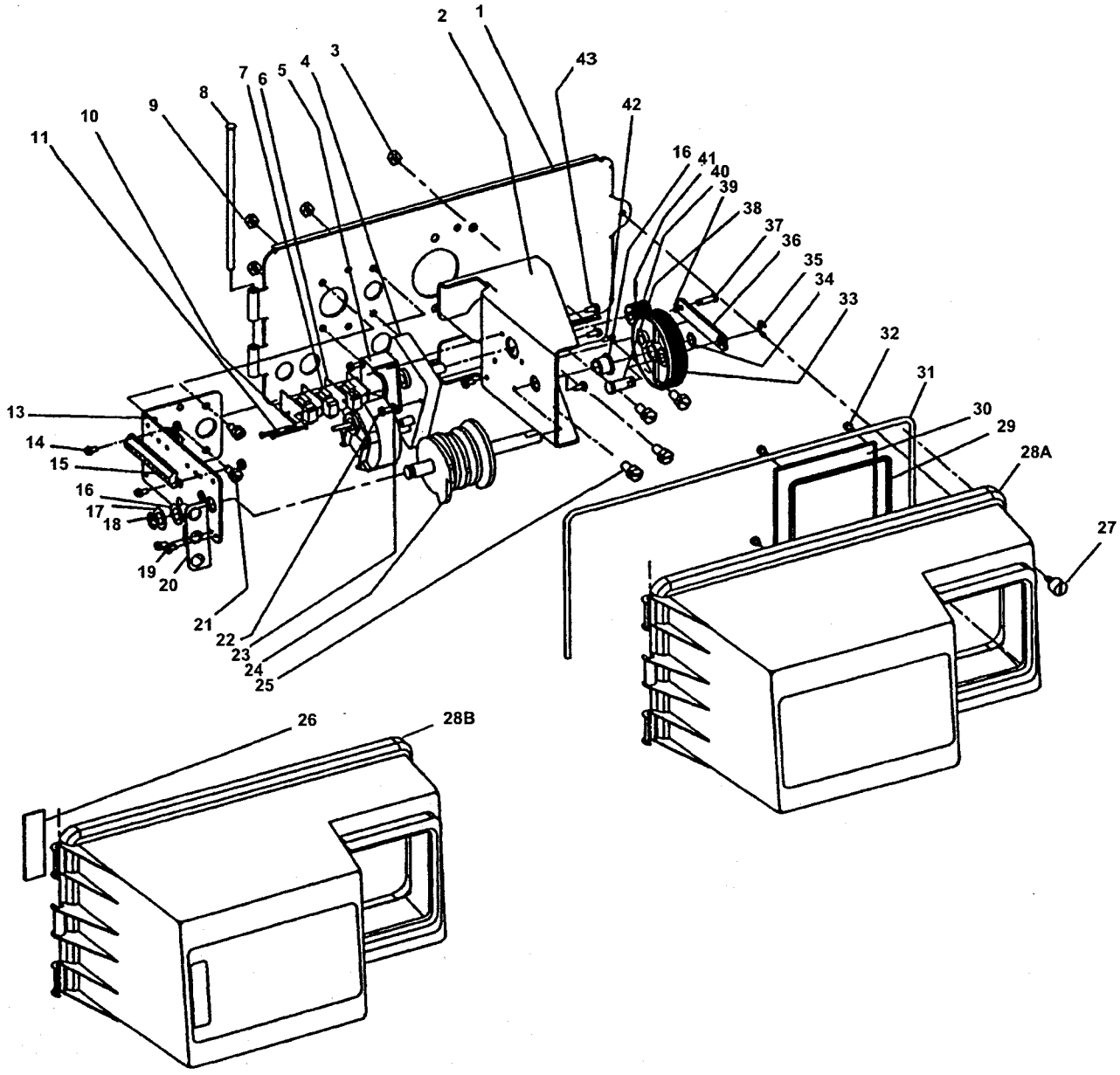

Printed in U.S.A.

MODEL 3150 Downflow

1800 Series Brine System Assembly

(see opposite page for parts list)

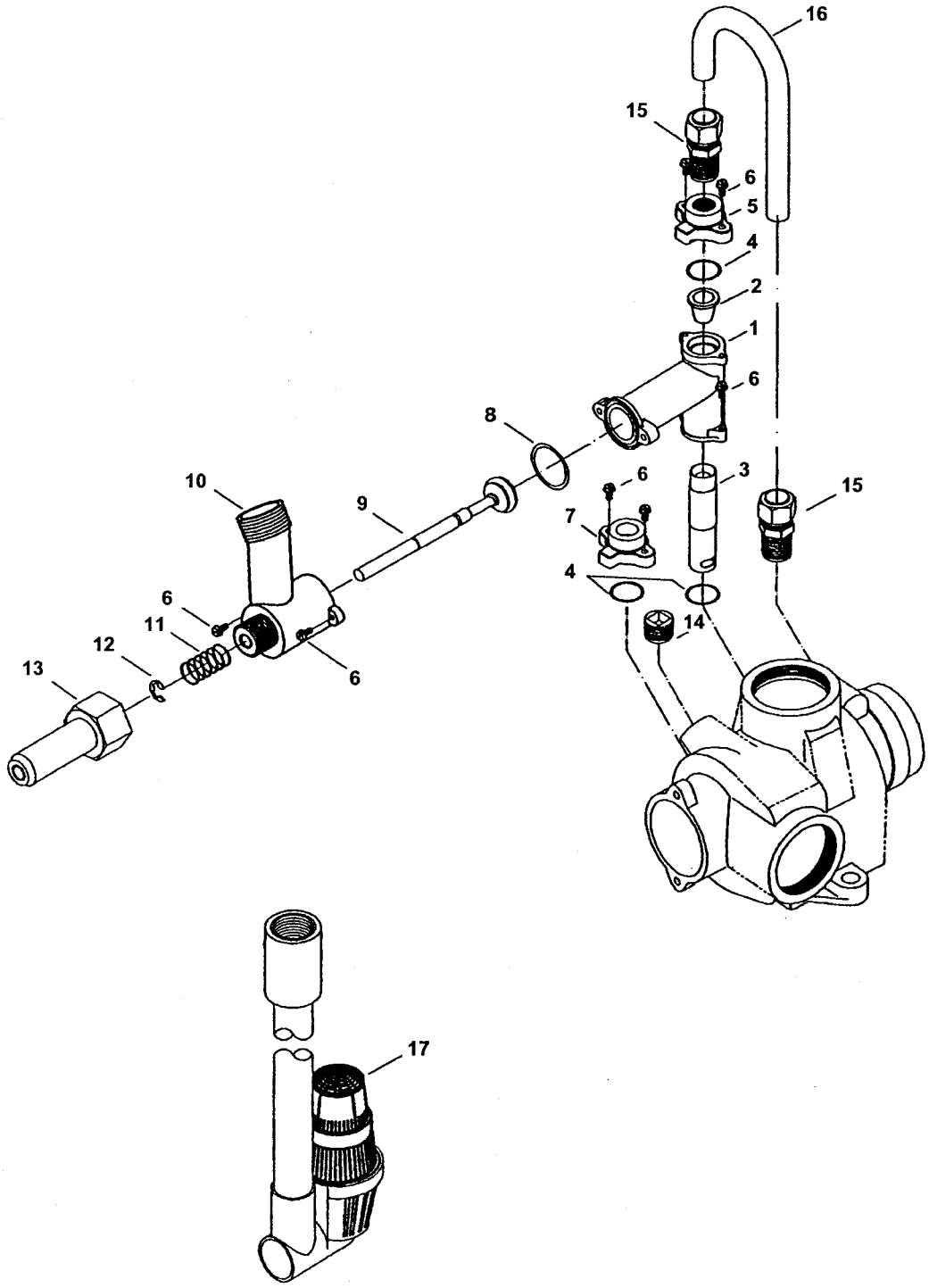

Printed in U.S.A.

MODEL 3150 Downflow

Service Valve Operator

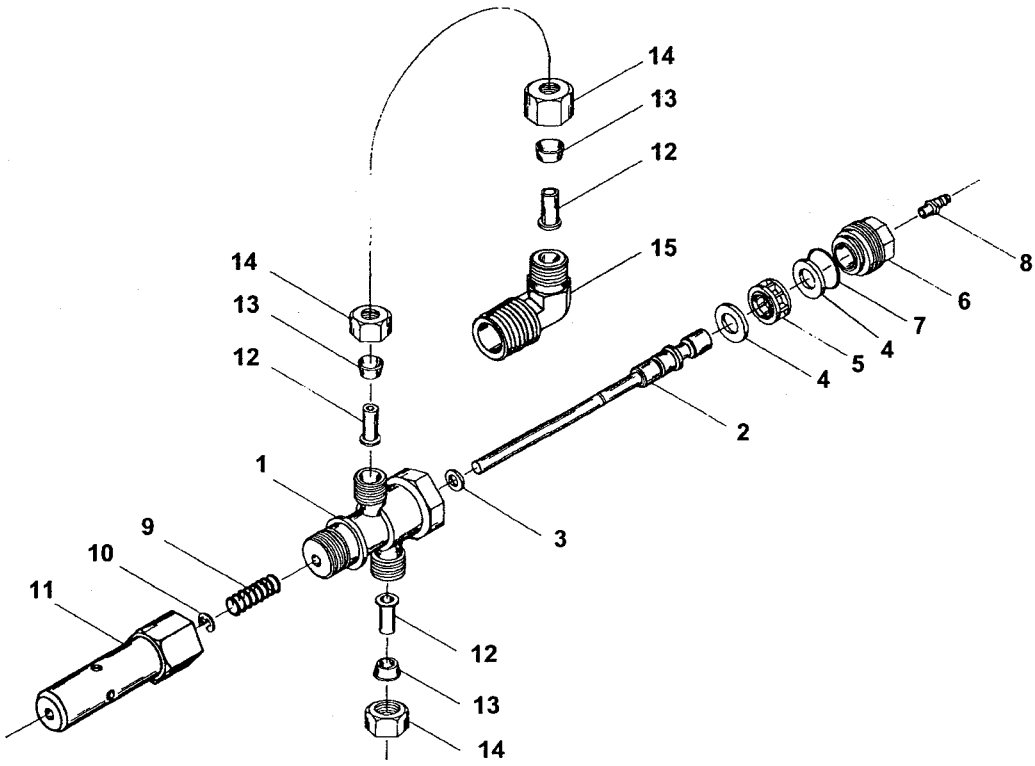

PARTS LIST

Item No.	Quantity	Part No.	Description
1	1	15074	Valve Body
2	1	16065	Stem
3	1	10141	O-Ring - 010
4	2	14835	Seal
5	1	14834	Spacer
6	1	16509	End Plug
7	1	14516	O-Ring - 015
8	1	15965	Fitting - 1/4 Tube
9	1	10249	Spring
10	1	10250	Retaining Ring
11	1	16498-02	Stem Guide Assembly
12	3	10332	Insert
13	3	10330	Ferrule
14	3	10329	Nut
15	1	16503	Tube Fitting
16	1	16511	SVO Tube - Not Shown

Printed in U.S.A.

3150 24V/120V System #7

Valve Wiring

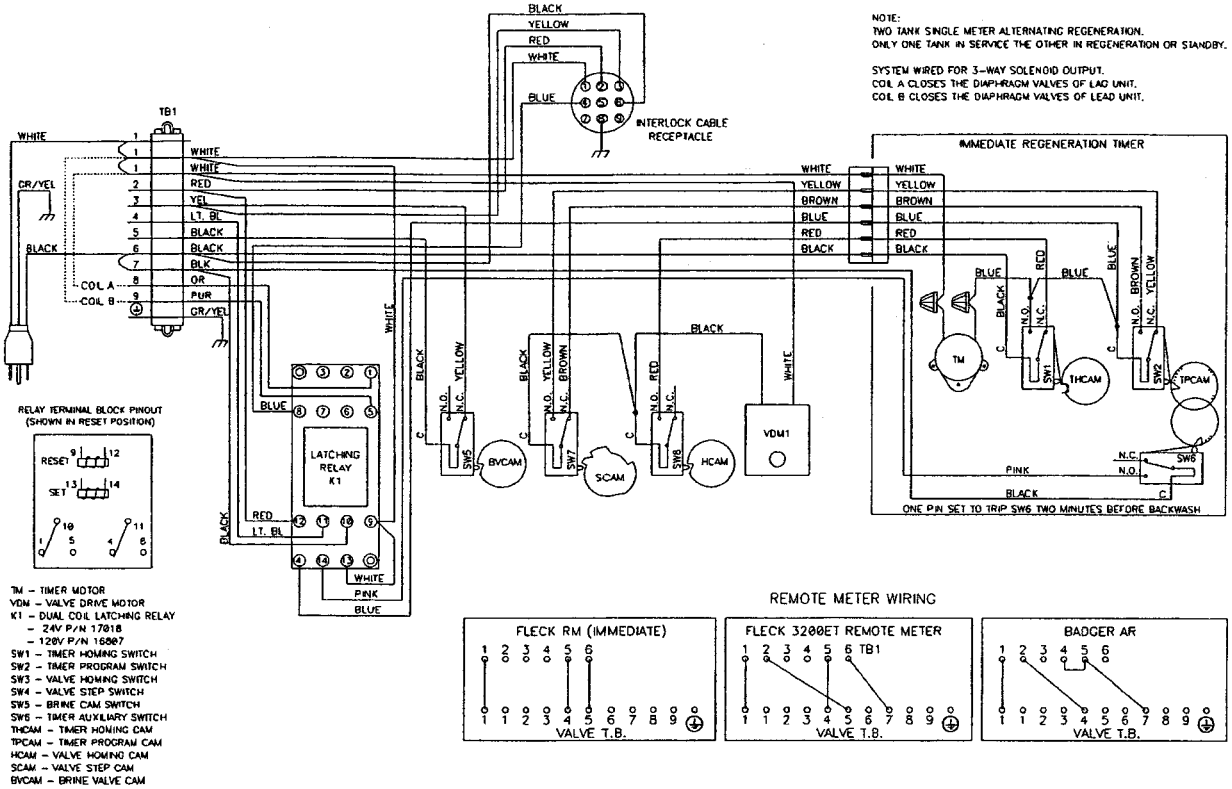

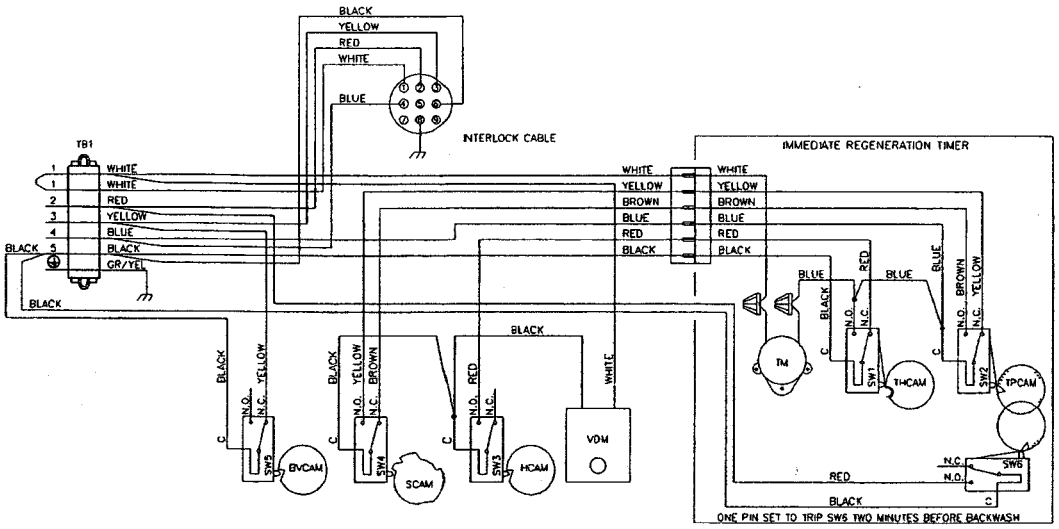

Printed in U.S.A.

System #4 - Typical Single Tank Installation With Optional Meter

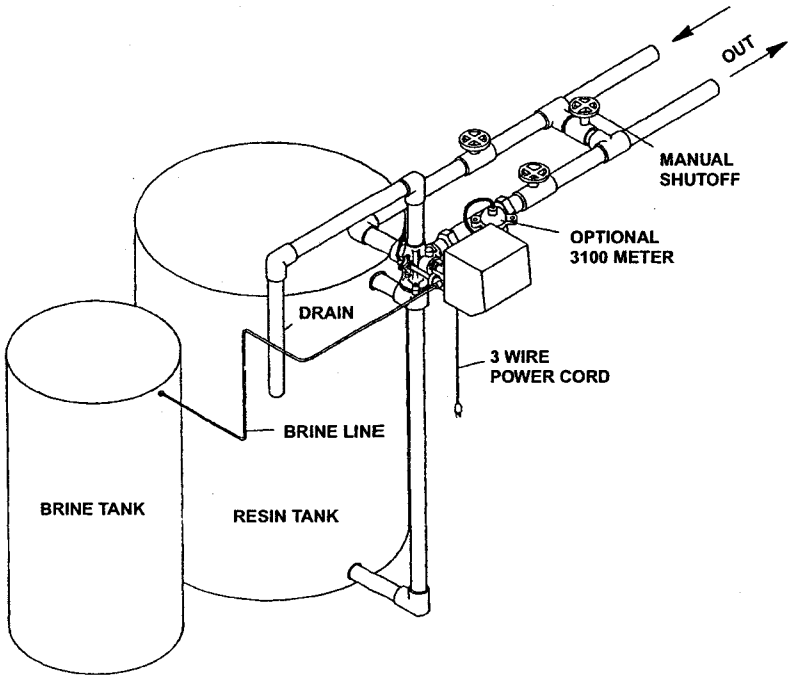

System #5 Interlock - Typical Twin Tank Installation with Optional Meter Interlock and No Hard Water Bypass

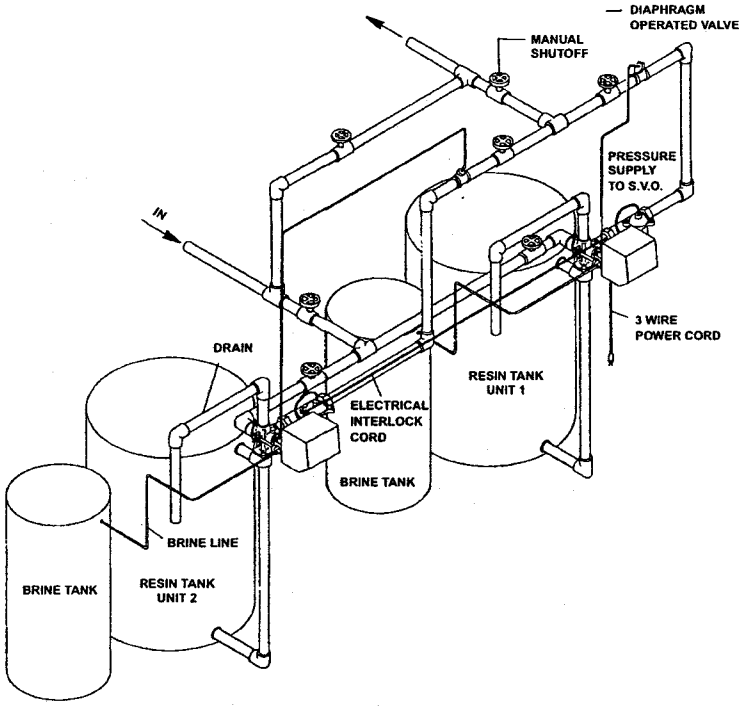

Printed in U.S.A.

MODEL 3150 Downflow

Flow Data & Injector Draw Rates

3150 VALVE SIDE MOUNT & TOP MOUNT

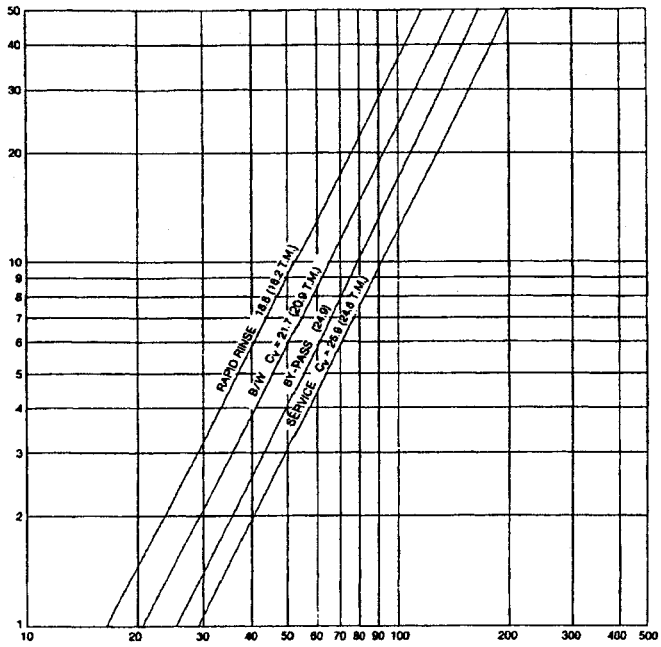

3150 ON EMPTY TANK

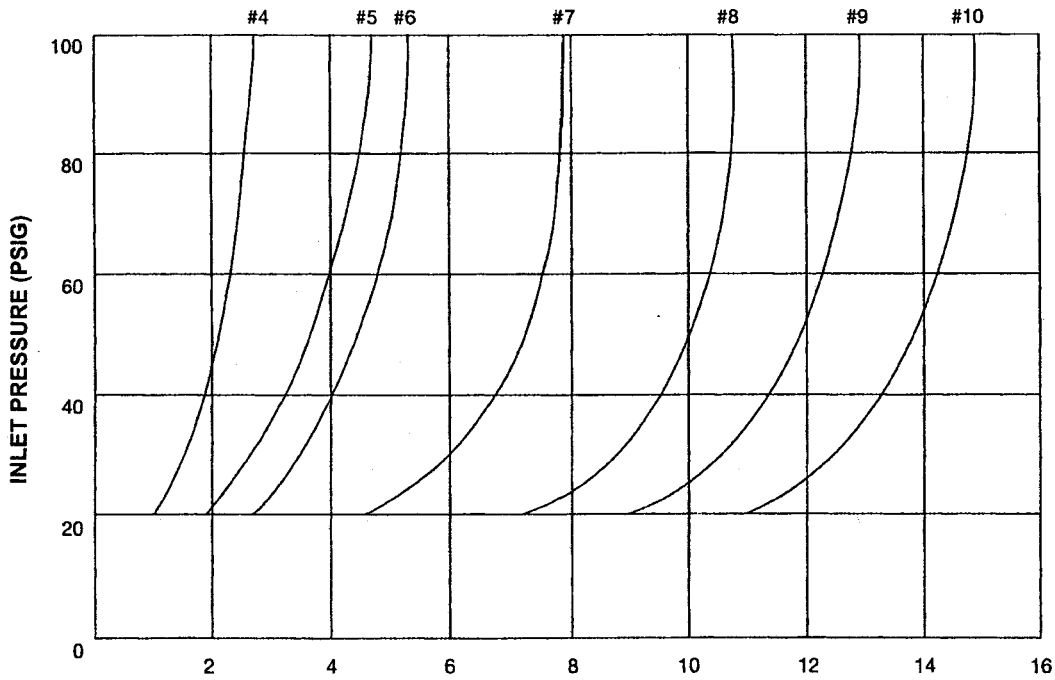

Printed in U.S.A.

60036-02 . . . . . 1800 Brine Valve
See Illustration Page 10

1 . . . . . 11772 . . . . . Spring
1 . . . . . 11774 . . . . . Retaining Ring
1 . . . . . 18713 . . . . . Brine Valve Body
1 . . . . . 16497-01 . . . . . Brine Stem Assembly
1 . . . . . 16498-01 . . . . . Stem Guide Assembly
1 . . . . . 18879 . . . . . O-Ring

60277 . . . . . 1800 Injector Assembly
See Illustration Page 10

4 . . . . . 12473 . . . . . Screw - Hex Hd.
1 . . . . . 15127 . . . . . Injector Throat - Specify Size
1 . . . . . 15128 . . . . . Injector Nozzle - Specify Size
2 . . . . . 15246 . . . . . O-Ring - 116
1 . . . . . 16340 . . . . . Injector Body
1 . . . . . 16341-01 . . . . . Injector Cover

60106-00 . . . . . 3150 Piston Assembly
See Illustration Page 6

1 . . . . . 14818 . . . . . Clip Piston Rod
1 . . . . . 14922 . . . . . O-Ring - 035
1 . . . . . 16130 . . . . . Piston
1 . . . . . 15125 . . . . . Piston Rod
1 . . . . . 16398-01 . . . . . End Plug Assembly White

60113-01 . . . . . 3150 No Hard Water Piston Assembly
See Illustration Page 6

1 . . . . . 16398-01 . . . . . End Plug Assy
1 . . . . . 19611-01 . . . . . Piston Assy, NHWB-P
1 . . . . . 19708 . . . . . Piston Rod
1 . . . . . 14818 . . . . . Clip Piston Rod

60131 . . . . . 3150 Seal Kit
See Illustration Page 6

2 . . . . . 10368 . . . . . Spacer
5 . . . . . 10369 . . . . . Spacer - Port
8 . . . . . 11720 . . . . . Seal

60057-01 . . . . . 3150 Drive Motor Assembly - 115 V.
See Illustration Page 8

4 . . . . . 10302 . . . . . Insulator - Switch
3 . . . . . 10872 . . . . . Screw - Hex Hd.
1 . . . . . 11080 . . . . . Screw - Flat Hd.
3 . . . . . 10218 . . . . . Switch
2 . . . . . 12660 . . . . . Nut 10-24
2 . . . . . 17567 . . . . . Screw - Hex Hd.
1 . . . . . 15120 . . . . . Bracket - Motor Mounting
1 . . . . . 16044 . . . . . Drive Motor - 115V.
1 . . . . . 16052 . . . . . Bushing
1 . . . . . 17797 . . . . . Bracket - Switch Mounting
2 . . . . . 16055 . . . . . Stand-Off
2 . . . . . 12624 . . . . . Screw - Pan Hd.
2 . . . . . 16131 . . . . . Spacer

60150-3150 . . . 3150 SVO Assembly
For Parts Breakdown
See Page 12

60393 . . . . . 2″ Meter Assembly - Std. Range
For Parts Breakdown
See Page 13

60394 . . . . . 2″ Meter Assembly - Ext. Range

Model 3200NT

Network Controller

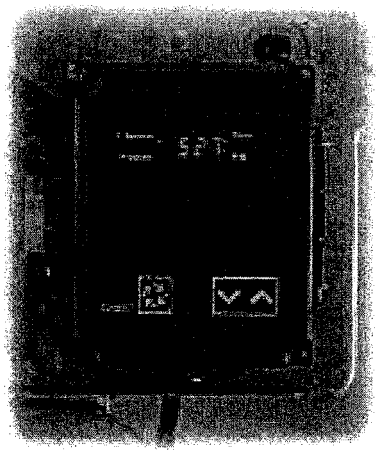

The 3200NT Network Controller uses on-board communications capabilities to link multiple valves via standard off-the-shelf telephone cables. The new circuit board is designed to fit in 3200ET controller housings and uses essentially the same hardware. This product is an option for Fleck commercial valves.

Product Features

- Networks of up to 4 valves
- Simple on-site programming
- Easy installation with plug-in wiring harnesses

Features and Options

- Up to 4 units in a network using standard RJ 45, 6 position, 4 conductor telephone cable
- Field configurable for any system type using a simple programming sequence. Defaults for all valves, pistons and cams types are stored
- Field configurable for any flow meter
- Programmable auxiliary relay - fused
- Remote start
- Remote lockout
- Variable reserve

System Type	
System Type 4	Single valve as Time Clock, Meter Immediate or Meter Delayed
System Type 5	2 to 4 valves (interlock)
System Type 6	2 to 4 valves (series)
System Type 7	2 valves (alternating, 1 meter)
System Type 9	2 to 4 valves (alternating, all meters)

Regenerant Flow

Downflow, Upflow Brine Draw First, Upflow Brine Refill First

Regeneration Type

Time Clock, Meter Delayed, Meter Immediate, Remote Start

Electrical Rating

24, 120 or 240 VAC (with appropriate transformer) 50/60Hz

Operating Temperature

32° F - 122° F (0° C - 50° C)

Humidity

95% RH, Non-condensing

Three Programming Levels

- Time of Day Adjustment: Simply push the up or down buttons.
- Quick Programming: Adjust Hardness, Regeneration Time and Day Override.
- Master Programming: Configure Valve Type, Regeneration Type, Remote Start/Lock, US or European time/volume display, system capacity safety factor, hardness, cycle step times, flow meter size, Auxiliary Relay operation.

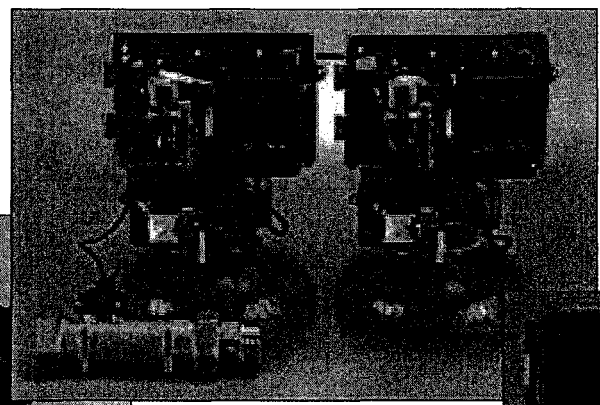

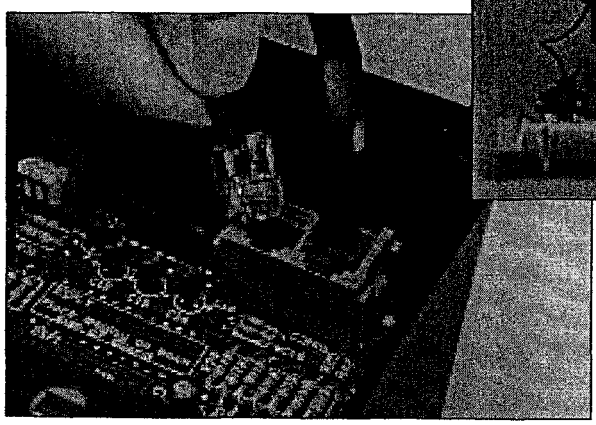

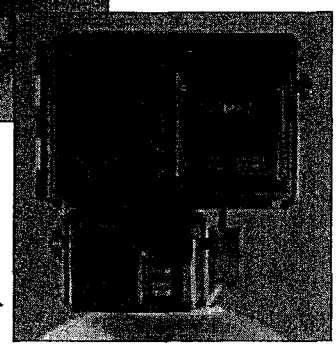

▲ 3200NT CONTROLLER WITH 2900 VALVES AND AN ELECTRONIC METER

◀ QUICK AND EASY CONNECTION FOR MULTI-VALVE SYSTEMS

2900NT WITH COVER ▶

Part no. 40823
2/03

3200NT Timer

Service Manual

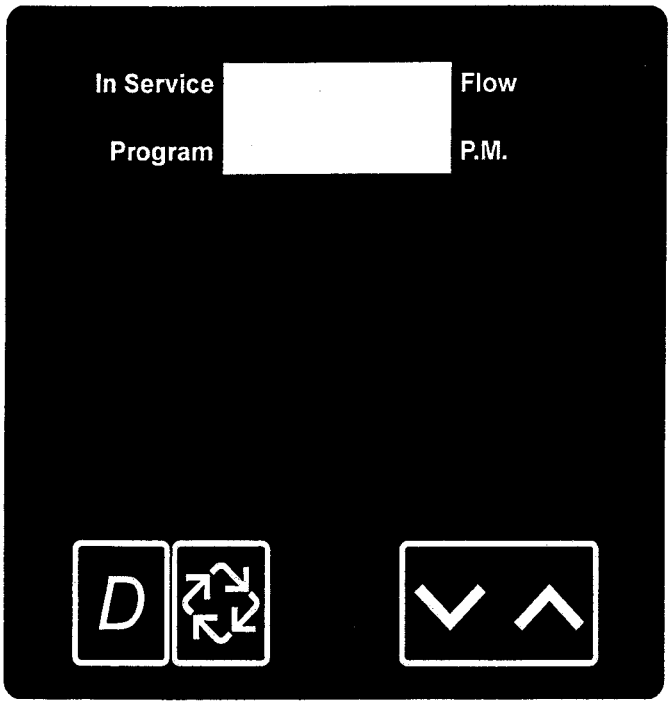

41151
NT001-1

Valve Serial Number _____

Valve Position 1-LEAd 2-LAg 3-LAg 4-LAg

IMPORTANT: Fill in pertinent information on *page 3* for future reference.

Job Specifications Sheet

Please circle and/or fill in the appropriate data for future reference.

Programming Mode:

Feed Water Hardness	_____ Grains Per Gallon	or	_____ Degrees
Regeneration Time:	Delayed_____a.m. / p.m.	or	Immediate
Regeneration Day Override	Off or Every _____ Days		

Master Programming Mode:

Valve Model	*2750*	*2850*	*2900*	*3150*	*3900*	
Regeneration Type	Downflow	Upflow Brine Draw First			Upflow Brine Fill First	
System Type	4 Time Clock	4 Meter Immediate		4 Meter Delayed		
	5 Interlock	6 Series		7 Alternating	9 Alternating	
Valve Position	LEAd or	LAg				
Remote Signal Start	Off or	On	Signal Time needed _____ Minutes			
Display Format	US Gallons	or	m^3			
Unit Capacity	_____	Grains	or	Degrees		
Capacity Safety Factor	Zero or	____%				
Regeneration Cycle Step #1		____ Minutes				
Regeneration Cycle Step #2	Off or	____ Minutes				
Regeneration Cycle Step #3	Off or	____ Minutes				
Regeneration Cycle Step #4	Off or	____ Minutes				
Regeneration Cycle Step #5	Off or	____ Minutes				
Time Auxiliary Relay Output Window #1	Off or	Start Time _____				
		End Time _____				
Time Auxiliary Relay Output Window #2	Off or	Volume _____				
		Seconds _____				
Fleck Flow Meter size	1"	1.25"	1.5"	2"	3" or	Non Fleck _____ Pulses
Line Frequency	50Hz or	60Hz				

Timer Operation

Immediate Regeneration Timer with Regeneration Day Override Set

When the valve reaches the set **Days Since Regeneration Override** value, a **Regeneration Cycle** initiates immediately. This occurs even if the **Volume Remaining** display has not reached zero.

Delayed Regeneration Timer with Regeneration Day Override Set

When the timer reaches the set **Days Since Regeneration Override** value a **Regeneration Cycle** initiates at the preset **Regeneration Time**. This occurs even if the **Volume Remaining** display has not reached zero.

Timer Operation During Programming

The timer only enters the Program Mode with the timer **In Service**. While in the Program Mode the timer continues to operate normally monitoring water usage and keeping all displays up to date. Timer programming is stored in memory permanently. There is no need for battery backup power.

Timer Operation During A Power Failure

During a power failure all timer displays and programming are stored for use upon power re-application. The timer retains all values, without loss. The timer is fully inoperative and any calls for regeneration are delayed. The timer, upon power re-application, resumes normal operation from the point that it was interrupted.

NOTE: An inaccurate **Time of Day** display may indicate a power outage.

Remote Lockout

The timer does not allow the unit/system to go into **Regeneration** until the Regeneration Lockout Input signal to the unit/system is cleared. This requires a contact closure to activate. The recommended gauge wire is 20 with a maximum length of 500 feet. See P4 remote inputs in the wiring diagrams on *pages 16 - 20.*

Remote Signal Start Regeneration

The control valve monitors treated water other than a flow meter. When timer receives a contact closure for the programmed amount of time, regeneration begins. The recommended gauge wire is 20 with a maximum length of 500 feet. See P4 remote inputs in the wiring diagrams on *pages 16 - 20.*

Day Override Feature

If the **Day Override** option is turned on and the valve reaches the set Regeneration Day Override value without the water meter initiating a **Regeneration Cycle**, a **Regeneration Cycle** queues. This occurs regardless of the remaining volume available.

WARNING

Transformer must be grounded and ground wire must be terminated to the back plate where grounding label is located before installation. See instructions for *Installing and Grounding the Transformer, page 21.*

System Operations

System 7

Alternating (2 Valves)

During normal operation the **Time of Day** display alternates with the **Volume Remaining** display (gallons or m^3). The **Volume Remaining** is for the individual unit.

— As treated water is used, the **Volume Remaining** display counts down from the calculated capacity to zero or (----). When this occurs a **Regeneration Cycle** queues.

— The valve requiring **Regeneration** sends a lock command to the standby valve. The standby valve goes to **In Service** and exhausted valve starts a **Regeneration Cycle**.

— If a valve is in **Regeneration** and the other valve exhausts its volume remaining, then the exhausted valve remains **In Service** with **Regeneration** queued until the other valve goes into standby. The exhausted valve goes into standby after completing **Regeneration**.

— Water flow through the valve is indicated by the Flow Dot that flashes in a direct relationship to flow rate.

System 9

Alternating (2 – 4 Valves)

During normal operation the **Time of Day** display alternates with the **Volume Remaining** display (gallons or m^3). The **Volume Remaining** is for the individual unit.

— As treated water is used, the **Volume Remaining** display counts down from the calculated capacity to zero or (----). When this occurs a **Regeneration Cycle** queues.

— The valve requiring **Regeneration** sends a lock command to the standby valve. The standby valve goes to **In Service** and exhausted valve starts a **Regeneration Cycle**.

— If a valve is in **Regeneration** and another valve exhausts its volume remaining, then the exhausted valve remains **In Service** with **Regeneration** queued until the other valve goes into standby. The exhausted valve goes into standby after completing **Regeneration**.

— All units remain **In Service** except those in standby or **Regeneration**.

— Water flow through the valve is indicated by the Flow Dot that flashes in a direct relationship to flow rate.

Important System Operations Tips

- ❑ When programming multi-unit systems, program LAg units first and then LEAd unit. This eliminates or minimizes lower drive movement due to system type changes and errors.
- ❑ When changing a valve from one system type to another system type, perform a Master Reset first.
- ❑ System 6, 7 and 9 valves coming out of program mode or on power-up calculate their volume (display = **CALc**) and then wait for a good communication signal.
  - — When a good communication signal is received, the system resume normal operations.
  - — If the system does not receive a good communication signal, **CALc** displays and the system goes into a wait. Press the EC key to force the system out of the wait and resume normal operation. A communication error may appear after one minute.
- ❑ The System 4, 5 and 6 LEAd valve drive sequence going into **Regeneration** is:
  - — The lower drive moves to off-line and the upper drive moves to first **Regeneration** position.
- ❑ All system 7 and 9 valves:
  - — The off-line valve moves to online, the valve requiring **Regeneration** moves its lower drive to off-line and then the upper drive moves to first **Regeneration** position.
- ❑ Reserve capacity–System 4Fd only. After power-up or Master Reset, the reserve is set by using the safety factor. Reserve is limited to a range of 0% - 50% of the unit capacity.
- ❑ System 6 and 7, LEAd units only, respond to remote lock and chemical pump. Also chemical pump is available only if the auxiliary relay in regeneration is not used **[AroF]**

Timer Programming Mode

NT016-0

1. Enter *3200NT* Programming Mode

Press and hold both the **Set Up** and **Set Down** buttons for five (5) seconds to enter Programming Mode. When the program mode is entered, the program light illuminates.

NT017-0

NT016-0

NT003-0

2. Set Feed Water Hardness

The feed water hardness setting displays only if the Regeneration Type is set to Meter Immediate or Meter Delayed.

— Press the **Set Up** and **Set Down** buttons to set the amount of feed water hardness (in grains/gallon). The system automatically calculates treated water capacity based on the feed water hardness and the system capacity.

— Press the **Extra Cycle** button to proceed to the next step.

NT018-0

NT016-0

NT003-0

3. Set Regeneration Time

A non-flashing colon between two sets of numbers identifies the **Regeneration Time** display. Set the desired time of day that you want **Regeneration** to occur.

— Press the **Set Up** and **Set Down** buttons to adjust this value.

— Press the **Extra Cycle** button to proceed to the next step.

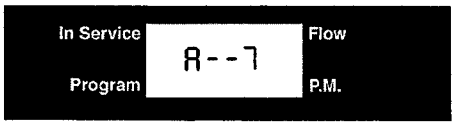

NT019-0

NT003-0

4. Set Regeneration Day Override

Us this display to set the maximum amount of time (in days) the unit can be **In Service** without a **Regeneration**.

— For System 4 Time Clock regeneration mode the system regenerates at the time set in Step 4 after the number of days programmed in this step.

— For all other System Types (4 Meter Immediate, 4 Meter Delayed, 5, 6, 7, 9) the system regenerates after the number of days programmed in this step unless the meter initiates a **Regeneration** cycle earlier.

— Press the **Extra Cycle** button to proceed to the next step.

Timer programming is complete and exits from the Programming Mode. Normal operation resumes.

Timer Diagnostics Display Definitions and Examples

Flow Rate
r = Display Code
Range = 1 - 99.9

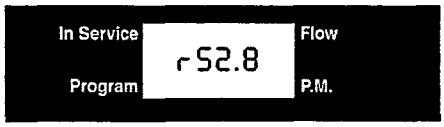

NT023-0

Range = 100 - 500

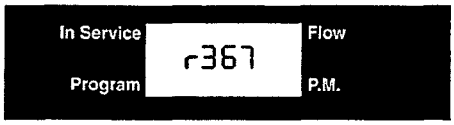

NT024-0

Peak Flow Rate
P = Display Code
Range = 0 - 500

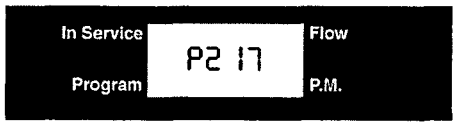

NT025-0

Totalizer
L = Display Code (X 1,000,000)
Range = 1,000,000 - 99,999,999

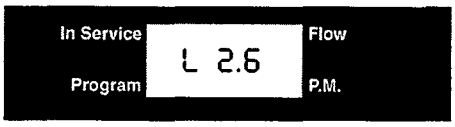

NT026-0

t = Display Code (X 1000)
Range = 10,000 - 999,999

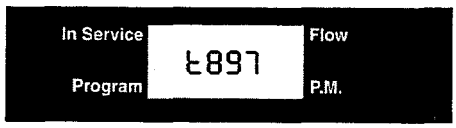

NT027-0

No Display Code
Range = 1 - 9,999

NT028-0

Hours Between Last Two Regenerations
II = Display Code
Range = 1 - 199

NT029-0

Hours Since Last Regeneration
⊟ = Display Code
Range = 1 - 199

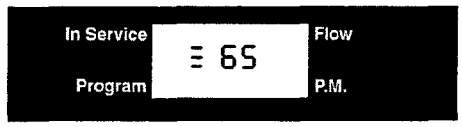

NT030-0

Adjustable Volume Remaining
L = Display Code (X 1,000,000)
Range = 1,000,000 - 2,900,000

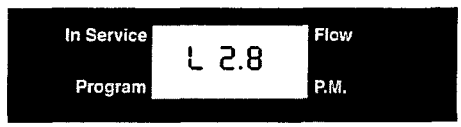

NT031-0

t = Display Code (X 1000)
Range = 10,000 - 999,999

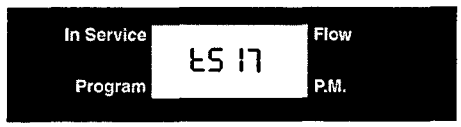

NT032-0

No Display Code
Range = 1 - 9,999

NT022-0

Valve Position
No Display Code (Lead or Lag)

NT033-0

Software Version
SP = Display Code

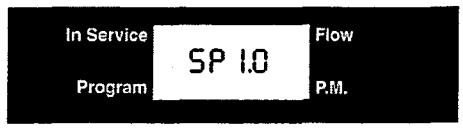

NT034-0

Power Head Assembly Parts List
2750/2850/2900 Upper Drive and 2900 Lower Drive

Item	Quantity	Part Number	Description
1	1	41062	***3200NT*** timer assembly
2	1	14202-01	screw, slotted hex washer head, #8-32 x .31
3	1	40959	bracket, strain relief, EZ NET
4	1	41071	bushing, strain relief
5	1	41035	plug, strain relief
6	1	40941	harness, upper drive
7	1	40385	motor, drive, 24V 50/60 Hz
8	1	41034	transformer, 120 / 24V, US
	1	41049	transformer, 230V/24V, European
	1	41050	transformer, 230V/24V, Australian
9	1	40943	harness, lower drive
10	1	40388	motor, drive, 24V 50/60 Hz
11	1	19121-08	meter cable assembly, 35"
	1	19121-09	meter cable assembly, 99.5"
	1	19121-10	meter cable assembly, 303.5"
12	2	12732	nut, hex, machine, #5-40
13	2	10299	screw, slotted round head, #5-40 x .38
14		40175-03	wire, ground, 7.5 lg w/ crimp connector
15	1	41047	kit, communication cable
Not shown			
16	1	41228	card, program/Diagnostics

NOTE: For all other service part numbers, see the Service Manual that accompanies the control valve.

Power Head Assembly Parts List, 3150/3900 Upper Drive and 3900 Lower Drive

Item	Quantity	Part Number	Description
1	1	41062	***3200NT*** timer assembly
2	1	14202-01	screw, slotted, hex washer head, #8-32 x .31
3	1	40959	bracket, strain relief, EZ NET
4	1	41071	bushing, strain relief
5	1	41035	plug, strain relief
6	1	40941	harness, upper drive
7	2	40391	motor, drive, 24V, 50/60 Hz
8	1	41034	transformer, 120V/24V
	1	41049	transformer, 230V/24V, European
	1	41050	transformer, 230V/24V, Australian
9	1	40943	harness, lower drive
10	1	19121-08	meter cable assembly, 35"
	1	19121-09	meter cable assembly, 99.5"
	1	19121-10	meter cable assembly, 303.5"
11	2	10299	screw, slotted round head, #5-40 x .375
12	2	12732	nut, hex, machine, #5-40
13		40175-03	wire, ground, 7.5 lg w/ crimp connector
14	1	41047	kit, communication cable
Not shown			
15	1	41228	card, program/Diagnostics

NOTE: For all other service part numbers, see the Service Manual that accompanies the control valve.

3150 Timer Wiring Diagram

OPTIONAL CUSTOMER WIRING:
P3 FLOW METER – NOT REQUIRED FOR TIME CLOCK OR REMOTE SIGNAL START REGENERATION APPLICATIONS
P4 REMOTE LOCKOUT INPUT – CLOSED INPUT PREVENTS REGENERATION
P4 REMOTE SIGNAL START – CLOSED INPUT INITIATES REGENERATION
P6 SOLENOID DRIVE OUTPUT – REQUIRED FOR ALTERNATING REGENERATION SYSTEMS ONLY
COMM1 NETWORK CONNECT – REQUIRED FOR MULTI-TANK SYSTEMS ONLY

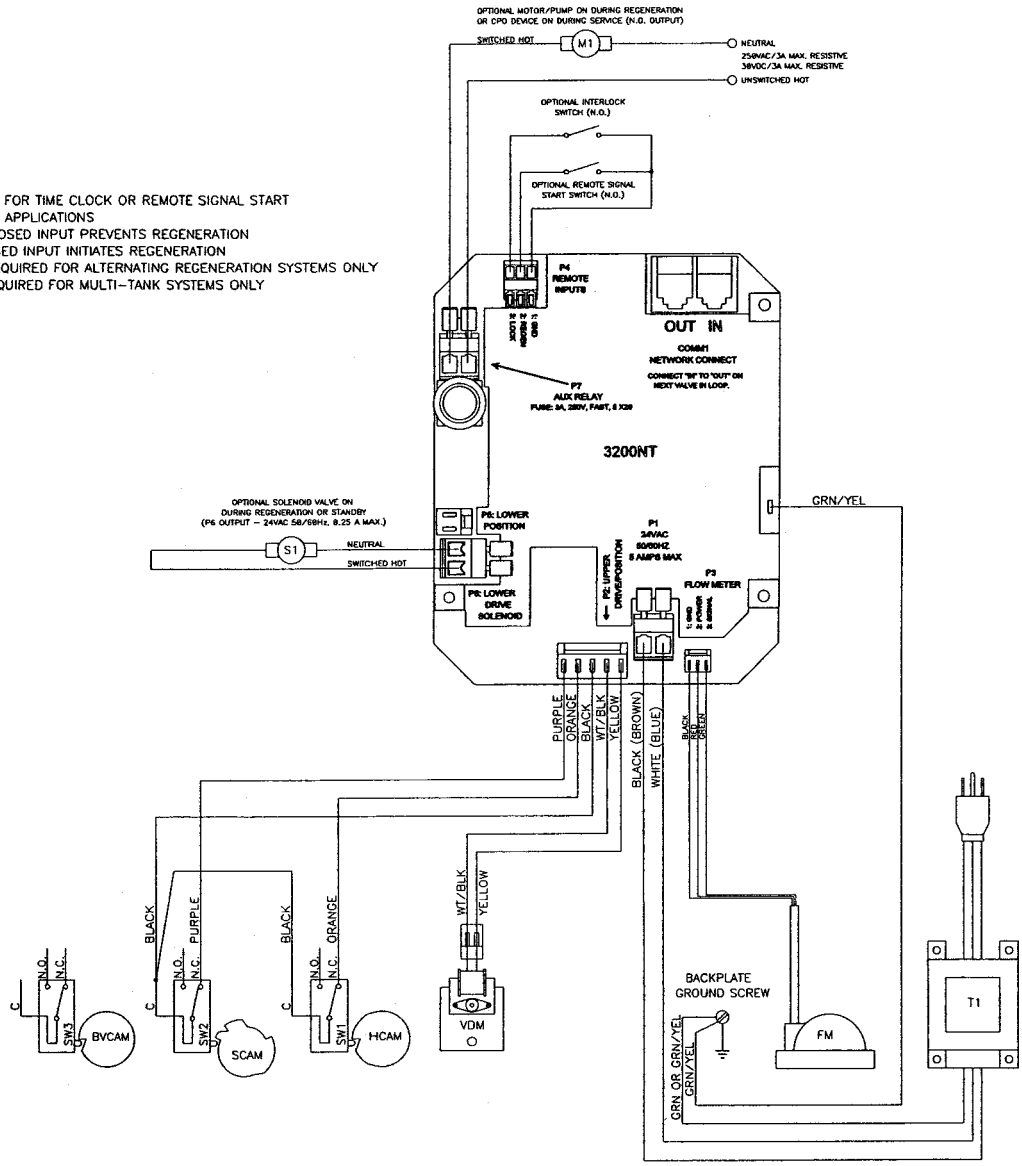

T1 – 24V TRANSFORMER
VDM– VALVE DRIVE MOTOR
SW1– VALVE HOMING SWITCH
SW2– VALVE STEP SWITCH
SW3 – BRINE CAM SWITCH
HCAM– VALVE HOMING CAM
SCAM– VALVE STEP CAM
BVCAM – BRINE VALVE CAM
FM – FLOW METER (OPTIONAL)
M1 – MOTOR OR PUMP (OPTIONAL)
S1 – SOLENOID VALVE (OPTIONAL)

NOTE:
1. TRANSFORMER FUSE – 5A 250V SLOW-BLOW P/N 41143
2. VALVE SHOWN IN SERVICE

41187
NT036-0

Figure 5: ***3150*** Timer Wiring Diagram, System #4—Single Valve Regeneration

3900 Timer Wiring Diagram

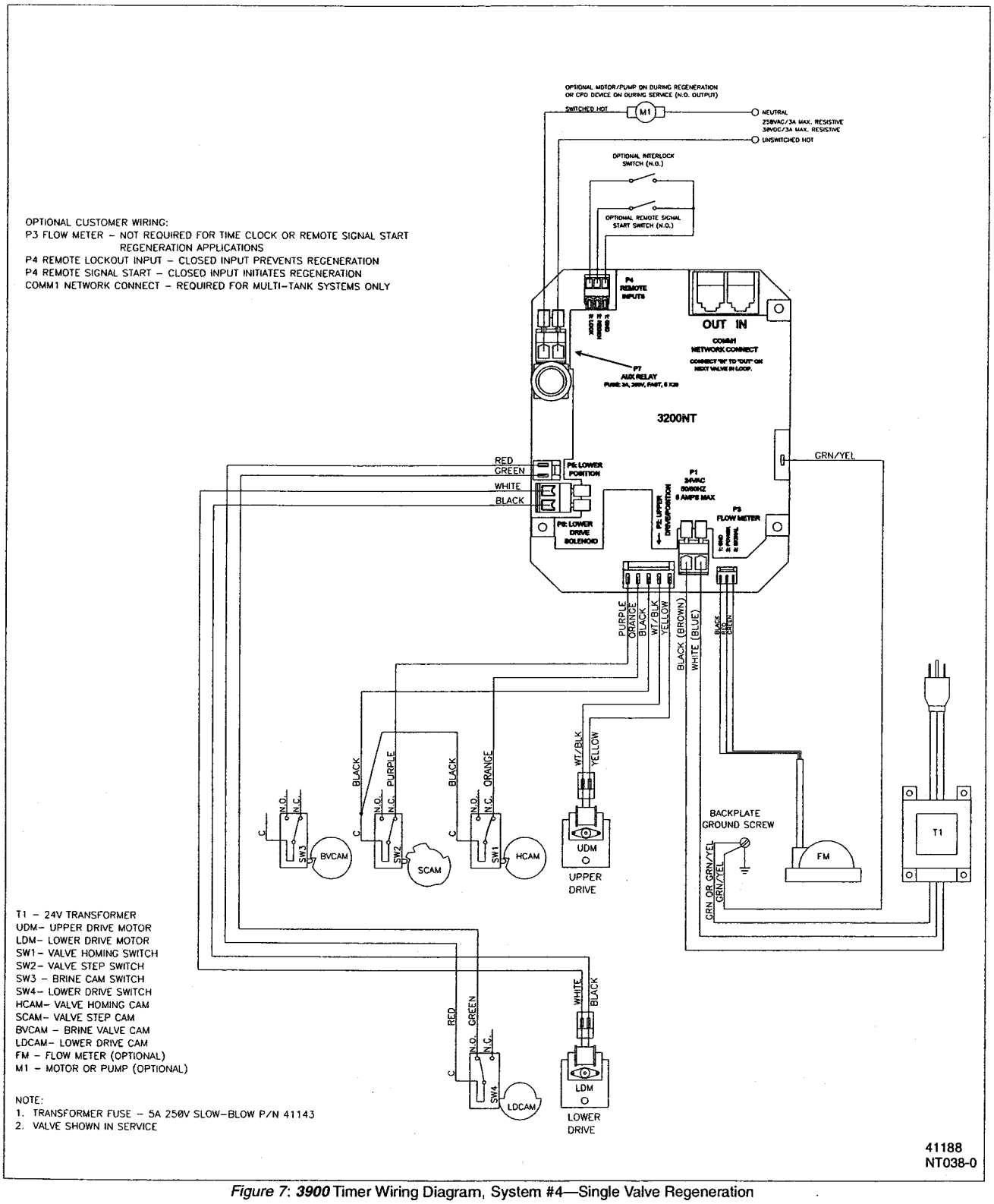

Figure 7: ***3900*** Timer Wiring Diagram, System #4—Single Valve Regeneration

Transformer, Phone Cable and Meter Cable Installation

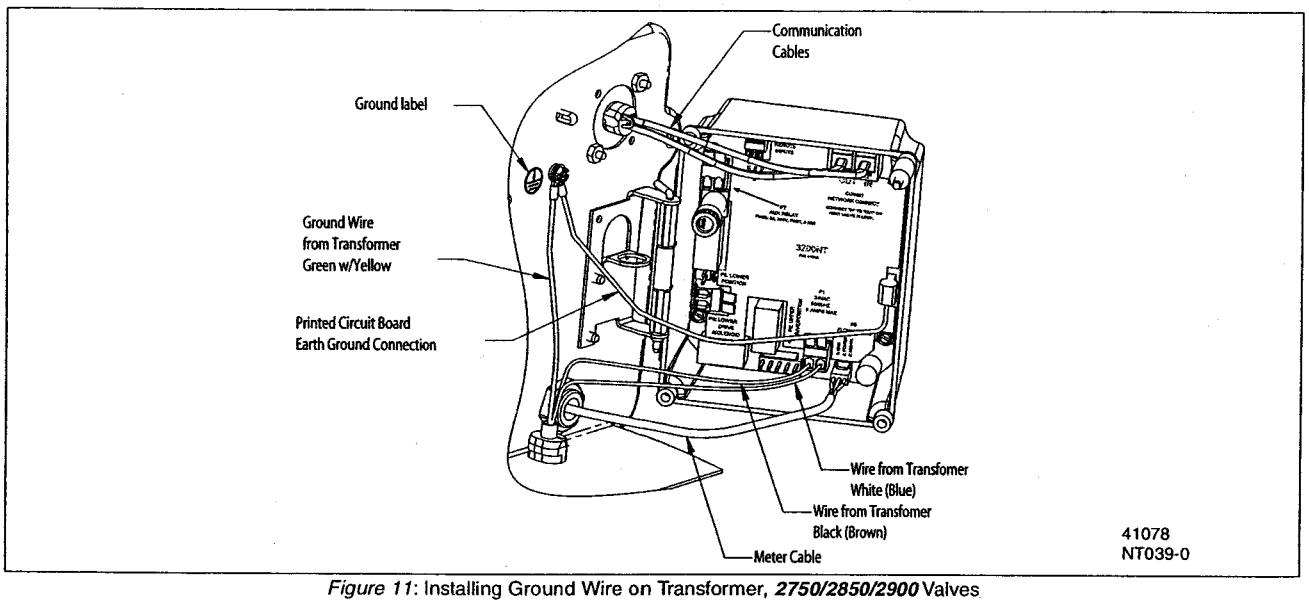

Figure 11: Installing Ground Wire on Transformer, ***2750/2850/2900*** Valves

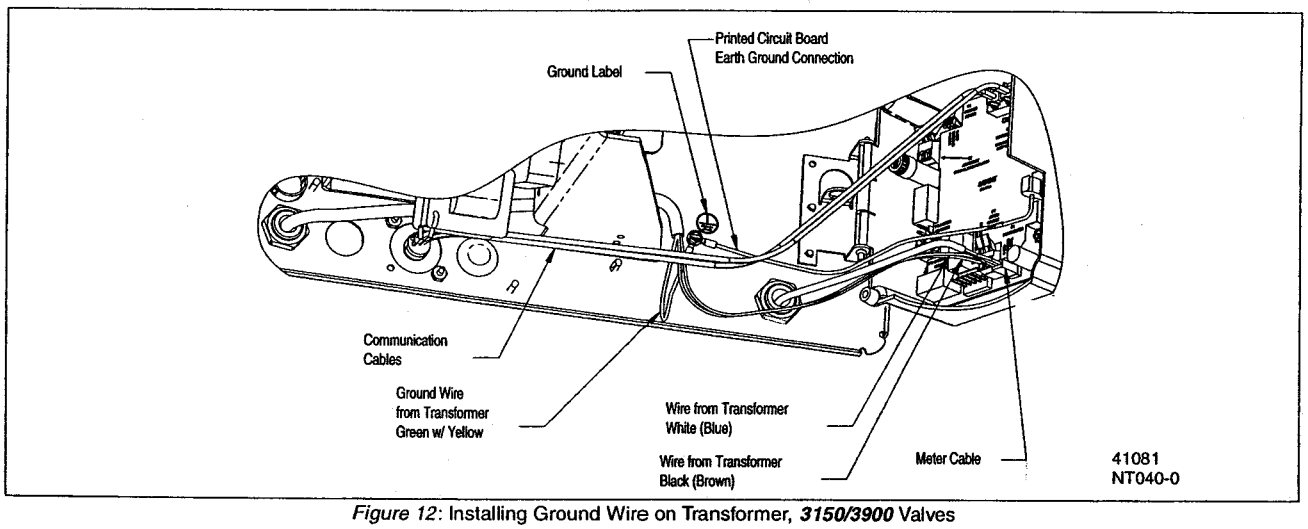

Figure 12: Installing Ground Wire on Transformer, ***3150/3900*** Valves

Item	*Description*
A	ground label
B	ground wire from transformer
C	wires from transformer

Installing and Grounding the Transformer

1. Locate the ground label (A) to find ground screw.
2. Remove the screw and attach the transformer ground wire (B).
3. Re-attach the screw.

Troubleshooting

Programming Error

Timers display **PErr** when a programming error occurs.

- If multiple timers are programmed as LEAd, **PErr** displays on all units.
- If multiple timers are programmed with different system types, feed water hardness, regeneration day override and line frequency, a **PErr** will be displayed.
- All units **In Service** remain in the **In Service** position.
- All units in standby go to **In Service**.
- Any unit in regeneration when the error occurs completes regeneration and goes to **In Service**.
- No units are allowed to start a regeneration cycle while the error condition exists.
- When the problem is corrected and the error no longer displays (it may take several minutes for all of the units in a system to stop displaying the error message), the system returns to normal operation.

NOTE: During the error condition the control continues to monitor the flow meter and update the remaining capacity. Once the error condition is corrected all units return to the operating status they were in prior to the error and regeneration is queued according to the normal system operation. If reprogramming the unit in the Master Programming Mode clears the error, the volume remaining may be reset to the full unit capacity (i.e. as though it were just regenerated).

NOTE: System 4 units retain their normal display and do not display **PErr**.

Cause	Correction
A. One or more timers are programmed as System type different from the LEAd unit.	A. Programming the units correctly in the Master Programming Mode.
B. More than one timer is programmed as the LEAd unit.	B. Programming the units correctly in the Master Programming Mode.
C. One or more timers are programmed with different hardness, day override or line frequency values.	C. Program these values to be the same on all units.

Simultaneous Communication and Programming Errors

If both a communication and programming errors occur simultaneously, the communications error (**cErr**) has precedence and masks the programming error (**PErr**). When the communications error (**cErr**) is corrected, the programming error (**PErr**) displays until corrected.

NOTE:

1. Set Time of Day display to 12:01 P.M.
2. Press and hold both the Set Up and Set Down buttons for 5 seconds.
3. Press Extra Cycle button once per display until all displays are viewed and Normal Display is resumed.
4. Option setting displays may be changed as required by pressing either the Set Up or Set Down button.
5. Depending on current valve programming, certain displays may not be viewed or set.

With Time of Day display set to 12:01 P.M., press and hold both the Set Up and Set Down buttons for 5 seconds.

Valve Model

Example:	2750 Control Valve	[2750] = Default
	2850 Control Valve	[2850]
	2900 Control Valve	[2900]
	3150 Control Valve	[3150]
	3900 Control Valve	[3900]

Regenerant Flow

Example:	Downflow	[dF] = Default
	Upflow, Brine Draw First	[UfbF]
	Upflow, Brine Refill First	[UFFF]

System Type

Example:	System #4 Time Clock Delayed	[4tc] = Default
	System #4 Meter Immediate	[4FI]
	System #4 Meter Delayed	[4Fd]
	System #5 Meter Immediate	[5FI]
	System #6 Meter Immediate	[6FI]
	System #7 Meter Immediate	[7FI]
	System #9 Meter Immediate	[9FI]

Valve Position

Example:	First Control Valve	[LEAd]
	Second, Third, Fourth Control Valve	[LAg] = Default

NOTE: This display is viewed with System #5, #6, #7, and #9 only.

Remote Signal Start

Example:	Cancel Setting	[rSoF] = Default
	Need 3 minute signal time to start regeneration	[rS-3]

NOTE: System Capacity, Capacity Safety Factor, Feed Water Hardness, Flow Meter Size and Chemical Pump Output settings are not viewed or used.

Display Format

Example:	US/Gallons	[U- -1] = Default
	Metric/Meter^3	[U- -4]

Regeneration Cycle Step #2 Programming

Example: 60 minute **Brine Draw/Slow Rinse**, gallons format, Downflow [2- 60]

45 minute **Brine Draw/Slow Rinse**, meter^3 format, Downflow [2- 45]

10 minute **Backwash**, gallons format, Upflow, Brine Draw First [2- 10]

10 minute **Backwash**, meter^3 format, Upflow, Brine Draw First [2- 10]

15 minute **Pause**, gallons format, Upflow, Brine Refill First [2- 15]

15 minute **Pause**, meter^3 format, Upflow, Brine Refill First [2- 15]

NOTE: All above setting are shown in factory default settings based on Regenerant Flow and display format.

Regeneration Cycle Step #3 Programming

Example: 10 minute **Rapid Rinse**, gallons format, Downflow [3- 10]

10 minute **Rapid Rinse**, meter^3 format, Downflow [3- 10]

10 minute **Rapid Rinse**, gallons format, Upflow, Brine Draw First [3-10]

10 minute **Rapid Rinse**, meter^3 format, Upflow, Brine Draw First [3- 10]

60 minute **Brine Draw/Slow Rinse**, gallons format, Upflow, Brine Refill First [3- 60]

45 minute **Brine Draw/Slow Rinse**, meter^3 format, Upflow, Brine Refill First [3- 45]

NOTE: All above setting are shown in factory default settings based on Regenerant Flow and display format.

Regeneration Cycle Step #4 Programming

Example: 12 minute **Brine Tank Refill**, gallons format, Downflow [4- 12]

8 minute **Brine Tank Refill**, meter^3 format, Downflow [4- -8]

12 minute **Brine Tank Refill**, gallons format, Upflow, Brine Draw First [4- 12]

8 minute **Brine Tank Refill**, meter^3 format, Upflow, Brine Draw First [4- -8]

10 minute **Backwash**, gallons format, Upflow, Brine Refill First [4- 10]

10 minute **Backwash**, meter^3 format, Upflow, Brine Refill First [4- 10]

NOTE: All above setting are shown in factory default settings based on Regenerant Flow and display format.

Regeneration Cycle Step #5 Programming

Example: Cancel Setting [50FF]

10 minute **Rapid Rinse**, gallons format, Upflow, Brine Refill First [4- 10]

10 minute **Rapid Rinse**, meter^3 format, Upflow, Brine Refill First [4- 10]

NOTE: All above setting are shown in factory default settings based on Regenerant Flow and display format.

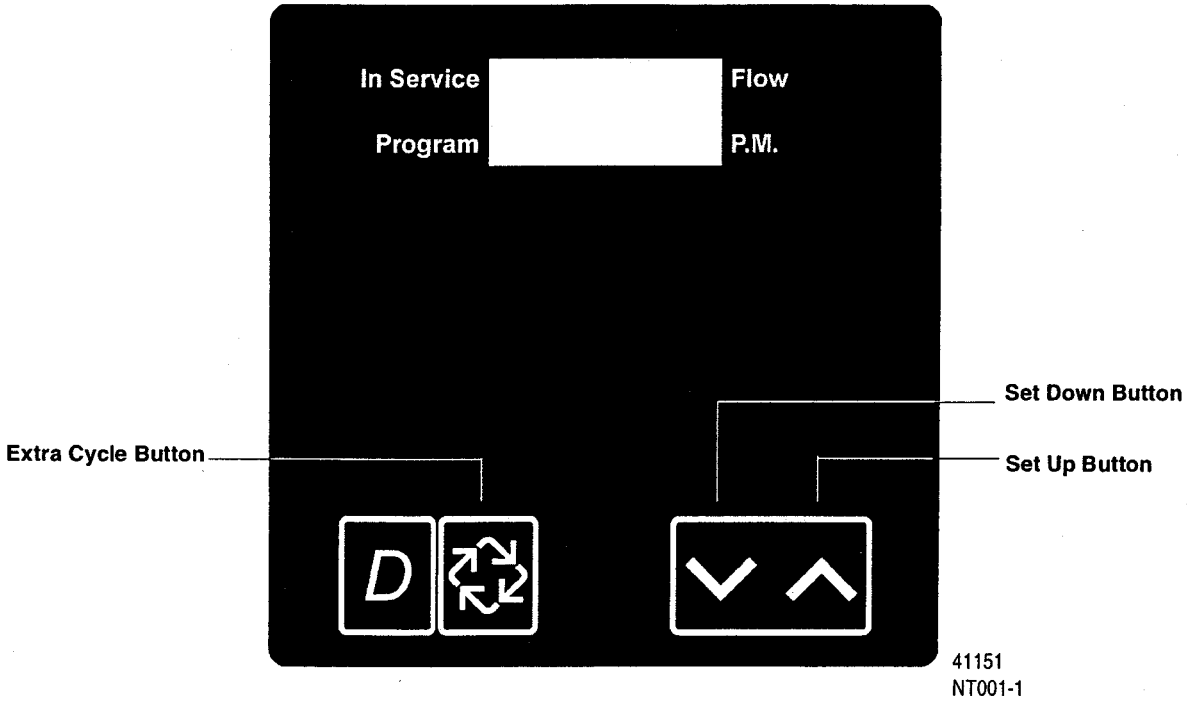

When the Master Programming Mode is entered, all available option setting displays may be viewed and set as needed. Depending on current option settings, some displays cannot be viewed or set.

Entering Master Programming Mode

Set the **Time Of Day** display to 12:01 P.M. Press and hold the **Set Up** and **Set Down** buttons together until the Program indicator turns on (about 5 seconds). Depending on current option settings, some displays cannot be viewed or set.

Exiting Master Programming Mode

Press the **Extra Cycle** button once per display until all are viewed. The Program Mode is exited and normal display resumes.

Resetting Permanent Programming Memory

Press and hold the **Set Up** and **Set Down** buttons (for about 25 seconds) until the **Time Of Day** display resets to 12:00 P.M. All option settings reset to default values. Control programming must be reset as necessary.

1. Valve Model (No Display Code)

This program step selects valve models: ***2750***, ***2850***, ***2900***, ***3150***, and ***3900***

— Use **Set Up** or **Set Down** buttons to adjust this value.
— Press the **Extra Cycle** button.

2. Regenerant Flow (No Display Code)

This program step is used to set the Regeneration Type. Availability is dependent on valve model chosen.

DownflowSetting: **[dF]**
Upflow, Brine FirstSetting: **[UFbF]**
Upflow, Fill FirstSetting: **[UFFF]**

— Use **Set Up** or **Set Down** buttons to adjust this value.
— Press the **Extra Cycle** button.

5. Remote Signal Start (Display Code rS)

The control valve is monitored other than a meter. Regeneration begins immediately after a contact closure is received for the number of minutes programmed. The amount of time is required for a contact closure to be presented before the signal is considered to be valid.

Range = 1 – 99 minutes

Cancel Setting — Setting: **[rSoF]**

3-Minute Signal Time To Start Regeneration — Setting: **[rS-3]**

— Use **Set Up** or **Set Down** buttons to adjust this value.
— Press the **Extra Cycle** button.

6. Gallons / Meter^3 Display Format (Display Code U)

This program step sets the desired display format. The letter U in the first digit of the display identifies this program step. The possible settings include:

Gallons of water, 12 hour timekeeping, and grains of hardness — Setting: **[U - - 1]**

M^3 of water, 24 hour timekeeping, and degrees of hardness — Setting: **[U - - 4]**

— Use **Set Up** or **Set Down** buttons to adjust this value.
— Press the **Extra Cycle** button.

7. Unit Capacity (Display Code C)

This program step sets the capacity of the system in kilograins (or m^3 X degrees for metric systems). The letter C in the first digit of the display identifies this program step. System Capacity calculates the amount of treated water (gallons or liters) that can be treated by the unit before a regeneration cycle is required.

Range = C--9 – C999 kilograins (US **[U - -1]**)

Range = Ct1.0 – Ct2.9 thousands of kilograins or millions of grains (US **[U - -1]**)

Range = C199 – C999 m^3 X degrees (metric **[U - - 4]**)

Range = Ct1.0 – Ct19 kilo m^3 X degrees (metric **[U - - 4]**)

450,000 grain system capacity, US display — Setting: **[C 450]**

— Use **Set Up** or **Set Down** buttons to adjust this value.
— Press the **Extra Cycle** button.

8. Capacity Safety Factor (Display Code cF)

This program step adjusts system capacity. The setting is a percentage by which the unit's capacity is reduced.

Range = 0 – 50%.

Reduce system capacity by 10% — Setting: **[cF10]**

— Use **Set Up** or **Set Down** buttons to adjust this value.
— Press the **Extra Cycle** button.

13. Auxiliary Relay Output (Display Codes AroF, cPoF)

The next two displays viewed are part of a series of settings used to program the optional relay output. The first setting turns the output on / off during Regeneration only. The second turns the output on during Service only, when a set volume of water used has accumulated. This second is not viewed on non-metered systems. When more than one of these settings is used, the relay must be wired to the auxiliary brine cam switch output to operate two separate pieces of equipment at one time.

NOTE: When auxiliary outputs are in the OFF (default) setting, use the Set Up or Set Down buttons to set the first setting. Then press the Extra Cycle button to advance to the second setting.

a. Timed Auxiliary Relay Output (Display Codes S-Start Time, E-End Time)

This option setting consists of two displays. The first display sets the turn-on time of the output, referenced to the start of the first Regeneration Cycle. The second display sets the output turn-off time, referenced again to the start of first Regeneration Cycle. An OFF setting cancels this setting. All settings are in minutes and output timing is synchronized with regeneration cycle timing.

Range = Total time of Regeneration

Cancel Setting	**[AroF]**
Turn on Start of Regeneration	**[S- - 0]**
Shut off End of Regeneration	**[E- 92]**
Turn on after 10 minutes in Regeneration	**[S- 10]**
Shut off after 20 minutes in Regeneration	**[E- 20]**

NOTE: The end of Regeneration is the total of all Regeneration Cycle steps times.

b. Chemical Pump Output (Display Codes u-Volume, t-Seconds)

This option setting consists of two displays. The first display sets the volume of water flow at which the output turns on. The second display sets the turn-on time (in seconds) of the output.

Range = 1 – 999 gallons

Range = 1 – 999 seconds

Cancel Setting	**[cPoF]**
Activate output after every 200 gallons	**[u200]**
Turn on for 60 seconds after every 200 gallons	**[t- 60]**

— Use **Set Up** or **Set Down** buttons to adjust this value.

— Press the **Extra Cycle** button.

14. Fleck® Flow Meter Size (Display Code FF)

This program step sets the size of the Fleck® flow meter. The letters FF in the first two digits of the display identifies this program step. The last two digits of the display indicate the meter's size. If **[FF- -]** generic is chosen, the next step is **Generic Flow Meter Size.** If any other selection is chosen, the next step is **Line Frequency**.

Range = 1" – 3" Fleck® Meter

2" Fleck® Meter — Setting: **[FF2.0]**

— Use **Set Up** or **Set Down** buttons to adjust this value.

— Press the **Extra Cycle** button.

Push In and Release the Diagnostic Display Button

Flow Rate

Example:	99.0 Gallons per Minute	[r99.0]
	367 Gallons per Minute	[r367]
	22.5 m^3 per Hour	[r22.5]
	102 m^3 per Hour	[r102]

Peak Flow Rate

Example:	367 Gallons Per Minute	[P367]
	15.3 m^3 per Hour	[P15.3]

Totalizer

Example:	7,365 Gallons	[7365]
	112,697 Gallons	[t112]
	7,179,300 Gallons	[L 7.1]
	1673 m^3	[1673]
	25597 m^3	[t255]
	1630596 m^3	[L 1.6]

Hours Between Last Two Generations

Example:	93 Hours	[II 93]

Hours Since Last Regeneration

Example:	67 Hours	[≡67]

Adjustable Volume Remaining

Example:	52,899 Gallons	[t52]

Valve Position

Example:	First Control Valve	[LEAd]
	Second, Third, Fourth Control Valve	[LAg]

NOTE: This display is only viewed with System #5, #6, #7, and #9.

Software Version

Example:	SP3.0	[SP3.0]

Diagnostic Mode is Exited

NOTE:

1. Push and release the "D" button.
2. Press Extra Cycle button once per display until all displays are viewed and Normal Display is resumed.
3. Push and release the "D" button at anytime during diagnostic mode and the timer will exit the mode.
4. Depending on current valve programming, certain displays may not be able to be viewed or set.

2. Peak Flow Rate (Display Code P)

The Peak Flow Rate since the last regeneration will be captured. Reset to zero by holding up and down keys for 5 seconds during the Peak Flow Rate display.

Display example: P100

Range = 0.0 – 99.9 gpm, 100 – 500gpm

Range = 0.0 – 99.9 m^3/h, 100 – 113 m^3/h

Depress the **Extra Cycle** button.

3. Totalizer (Display Code t = x 1000, L = x 1,000,000)

The total volume of treated water that passes through a meter will be counted to a maximum limit of 99,999,999 gallons or m^3. Reset to zero by holding up and down keys for 5 seconds during the Totalizer display.

Ranges =	No Display Code	0 to 9999	=	0 – 9,999
	Display Code (t)	t-10 to t999	=	10,000 – 999,999
	Display Code (L)	L-1.0 to L99.9	=	1,000,000 – 99,999,999

Depress the **Extra Cycle** button.

4. Hours Between Last Two Regenerations (Display Code II)

The hours between the last two regenerations will be saved and displayed.

Display example: II 93

Range = 0 to 999 Hours

Depress the **Extra Cycle** button.

5. Hours Since Last Regeneration (Display Code ≡)

The hours since the last regeneration will be saved and displayed.

Display example: 67

Range = 0 to 999 hours.

Depress the **Extra Cycle** button.

3200NT Spec Sheet

Description

The 3200NT Network Timer uses on board communications capabilities to link multiple valves via standard off-the shelf telephone cables. The new circuit board is designed to fit in 3200ET Timer housings and uses essentially the same hardware. This product is an option for Fleck commercial valves.

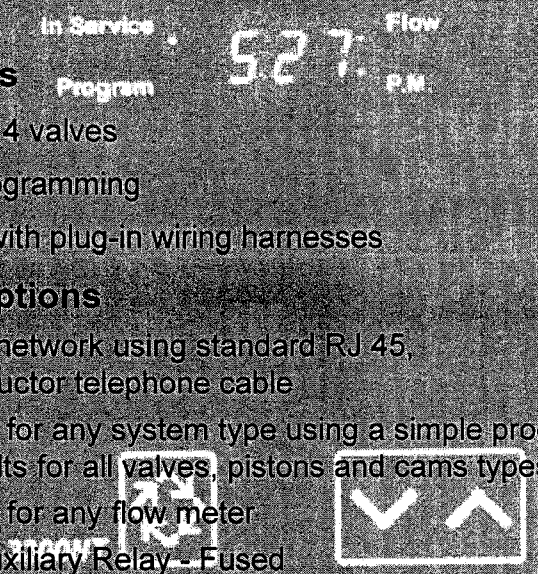

Product Benefits

- Networks of up to 4 valves
- Simple on-site programming
- Easy installation with plug-in wiring harnesses

Features and Options

- Up to 4 units in a network using standard RJ 45, 6 position, 4 conductor telephone cable
- Field configurable for any system type using a simple programming sequence. Defaults for all valves, pistons and cams types are store
- Field configurable for any flow meter
- Programmable Auxiliary Relay - Fused
- Remote Start
- Remote lockout
- Variable Reserve

Model 3200NT — Network Timer

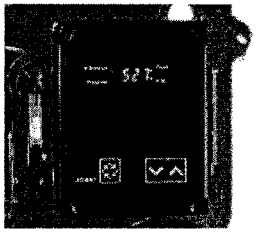

Description

The 3200NT Network Timer uses on board communications capabilities to link multiple valves via standard off-the shelf telephone cables. The new circuit board is designed to fit in 3200ET Timer housings and uses essentially the same hardware. This product is an option for Fleck commercial valves.

Product Benefits

- Networks of up to 4 valves
- Simple on-site programming
- Easy installation with plug-in wiring harnesses

Features and Options

- Up to 4 units in a network using standard RJ 45, 6 position, 4 conductor telephone cable
- Field configurable for any system type using a simple programming sequence. Defaults for all valves, pistons and cams types are stored
- Field configurable for any flow meter
- Programmable Auxiliary Relay - Fused
- Remote Start
- Remote lockout
- Variable Reserve

Specifications

System Type	
System Type 4	Single valve as Time Clock, Meter Immediate or Meter Delayed
System Type 5	2 to 4 valves (interlock)
System Type 6	2 to 4 valves (series)
System Type 7	2 Valves (alternating, 1 meter)
System Type 9	2 to 4 Valves (alternating, all meters)
Regenerant Flow	Downflow, Upflow Brine Draw First, Upflow Brine Refill First
Regeneration Type	Time Clock, Meter Delayed, Meter Immediate, Remote Start
Electrical Rating	24, 120 or 240 VAC (with appropriate transformer) 50/60 Hz
Operating Temperature	32° F - 122° F (0° C - 50° C)
Humidity	95% RH, Noncondensing

Three Programming Levels

- Time of Day Adjustment: Simply push the up or down buttons.
- Quick Programming: Adjust Hardness, Regeneration Time and Day Override.
- Master Programming: Configure Valve Type, Regeneration Type, Remote Start/Lock, US or European time/volume display, system capacity safety factor, hardness, cycle step times, flow meter size, Auxiliary Relay operation.

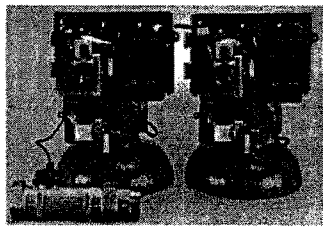

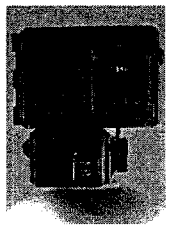

Left: 3200NT timer with 2400 valves and an electronic meter
Middle: 3100NT with cover
Below: Easy connection for multi-valve systems.

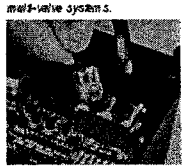

Part no. 40823

3200NT System Configuration

Single/Dual Piston System 4
requires:
1 valve with 3200NT
1 meter
1 meter cable

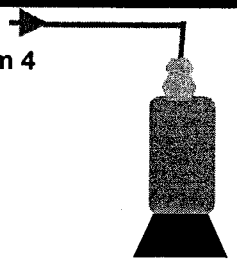

Single/Dual Piston System 5
Duplex requires:
2 valves with 3200NT
2 meters
2 meter cables
2 communication cable kits

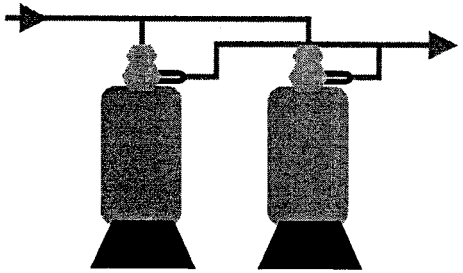

Single/Dual Piston System 5
Triplex requires:
3 valves with 3200NT
3 meter
3 meter cable
3 communication cable kits

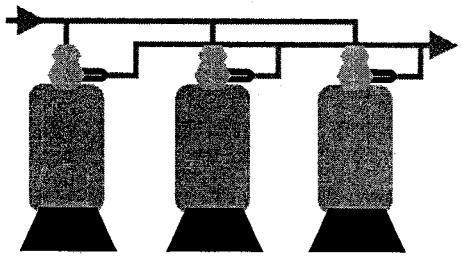

Single/Dual Piston System 5
Quadplex requires:
4 valves with 3200NT
4 meters
4 meter cables
4 communication cable kits

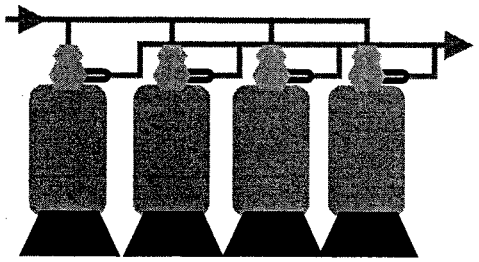

Single/Dual Piston System 6
Duplex requires:
2 valves with 3200NT
1 meter
1 meter cable
2 communication cable kits

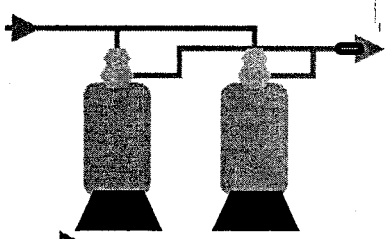

Single/Dual Piston System 6
Triplex requires:
3 valves with 3200NT
1 meter
1 meter cable
3 communication cable kits

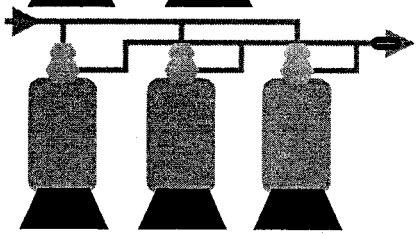

Single/Dual Piston System 6
Quadplex requires:
4 valves with 3200NT
1 meter
1 meter cable
4 communication cable kits

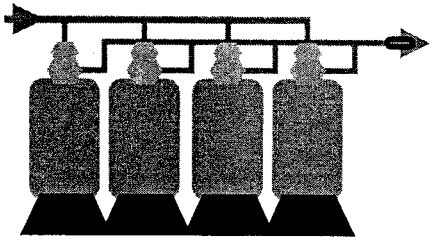

Single Piston System 7
Duplex requires:
2 valves with 3200NT
1 meter
1 meter cable
(2 solenoid valves,
2 diaphragm valves)
2 communication cable kits

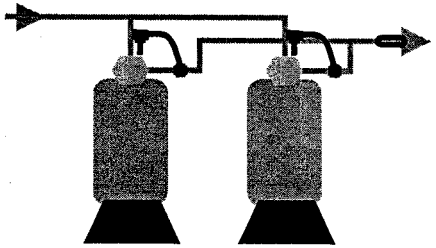

TAB G
FLOW METERS AND TRANSMITTERS

EX80 Series

ELECTROMAGNETIC INSERTION FLOW SENSOR SPECIFICATIONS

SeaMetrics

EX80 SERIES ELECTROMAGNETIC INSERTION FLOW SENSOR SPECIFICATIONS

GENERAL INFORMATION

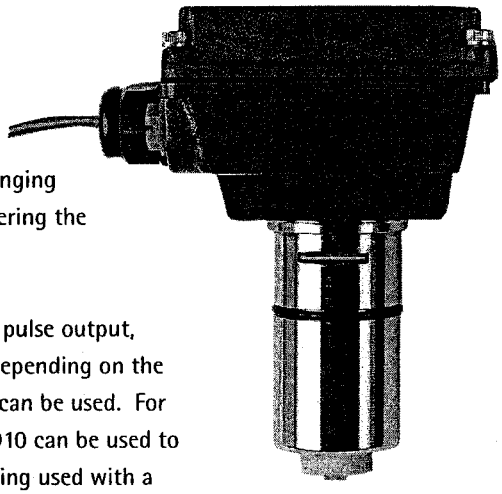

The EX81 is an insertion electromagnetic flowmeter for use with conductive liquids in pipe sizes 1" to 3". The EX82 is for use with pipe sizes 4" to 8". With no moving parts, it is highly suitable for corrosive environments and for difficult applications such as those involving changing viscosities and pulsating flows. It is particularly recommended for metering the output of air-driven diaphragm pumps.

Designed for modularity and versatility, the EX81 has a current-sinking pulse output, which can be combined with the appropriate transmitter or indicator depending on the application. For analog output and display of rate and total, an FT420 can be used. For analog only, the AO55 can be mounted directly onto the meter. The PD10 can be used to divide the pulse for pacing chemical metering pumps. If the EX81 is being used with a programmable controller, the output signal can be fed direct with no other conditioning required.

The EX81 requires a special fitting, since it is not depth-adjustable as are the EX100/200 series meters. Installation in the fitting ensures correct depth placement in the pipe. Fittings and sensors are available in PVC, brass, and stainless steel.

SPECIFICATIONS

POWER
- 12 – 24 Vdc, 250 mA minimum

FLOW RANGE
- 0.2 – 20 ft/sec (.06 – 6.09 m/sec)

MAXIMUM TEMPERATURE
- PVC 130°F (55°C)
- Brass, SS 200°F (93°C)

PRESSURE
- 200 psi (13.8 bar)

MINIMUM CONDUCTIVITY
- 20 microsiemens/cm

MATERIALS
- Mechanical 316 SS/Brass/PVC
- Electrode plate PVDF
- Electrodes Carbon Graphite
- Housing Cast powder-coated aluminum

O-RINGS
- EPDM

CALIBRATION ACCURACY
- 1% of full scale

OUTPUT
- Square wave pulse, opto isolated, 500 Hz @ 20 ft/sec

BI-DIRECTIONAL
- Direction output, opto isolated

EMPTY PIPE DETECTION
- Software, defaults to zero flow

EX80 Series

ELECTROMAGNETIC FLOW SENSOR INSTRUCTIONS

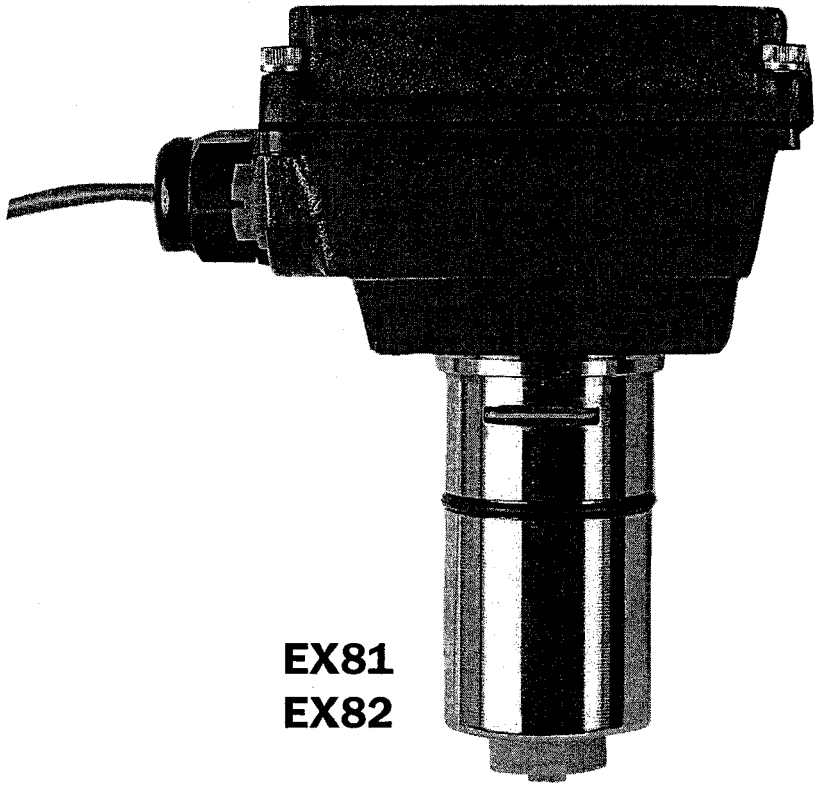

EX81
EX82

SeaMetrics

The Leader in Flow Meter Value.

EX80 SERIES ELECTROMAGNETIC FLOW SENSOR INSTRUCTIONS

GENERAL INFORMATION

The EX80-Series are electromagnetic insertion flow sensors for use in conductive liquids in pipe sizes 1" to 8" (25mm to 200 mm.) Lacking moving parts, they are well suited for applications which have particulates in the fluid and are therefore problematic for impellers or turbines. Other advantages are insensitivity to viscosity and tolerance for pulsating flows. This makes them a good choice with fluids with varying viscosity and with air-driven diaphragm pumps.

Modularity. Simplicity and modularity are at the core of the EX80 design. The basic flow sensor has one output, which is pulse proportional to flow rate. The FT420 module can be added to provide indication, 4-20 mA, and flow rate setpoints. The AO55 adds 4-20 mA analog only (blind transmitter). The FS10 is a flow switch module, and the DL75 is a datalogger.

Any of these modules except the DL75 (which is wall-mount only) can be ordered pre-installed on the flow sensor or in a wall mount housing, and any can be retrofitted to the EX80-Series sensor in the field.

Output. The basic pulse signal is compatible with many controls, with PLC's and irrigation or water treatment controllers being the most common. For these applications it is sometimes necessary to add a pull-up resistor, if the controller is not designed for a current-sinking input. See the section on "Connecting to PLC's and other Controllers" before connecting to a non-SeaMetrics control.

Insertion Depth. Like all insertion flow sensors, the EX80-Series extend into the pipe and measure the velocity of the fluid in a particular area of the pipe. The chosen insertion depth is the "critical point", or the area of the flow stream which maintains the average velocity across a wide range of flow rates. This is necessary because the shape of the velocity profile changes as the rate increases. (It transitions from a "bullet" to more of a "plug" shape).

Fittings. Since the EX80-Series sensors are not adjustable, they must be purchased with fittings appropriate to the application. The EX81 is sized for fittings of 1" to 3". The EX82 is for fittings of 4" to 8". Each fitting insures that the flow sensor is installed at the correct point. Every flow sensor and every tee fitting is wet calibrated. Saddle fittings are normally not wet calibrated, because they are field-installed on a pipe. In PVC however it is possible to order a saddle pre-installed on a standard length of pipe, in which case the entire assembly is wet-calibrated. For all other saddles, the k-factor (pulses per gallon) is established through testing with various standard schedules of pipe and provided with the saddle.

EX80 PARTS DIAGRAM

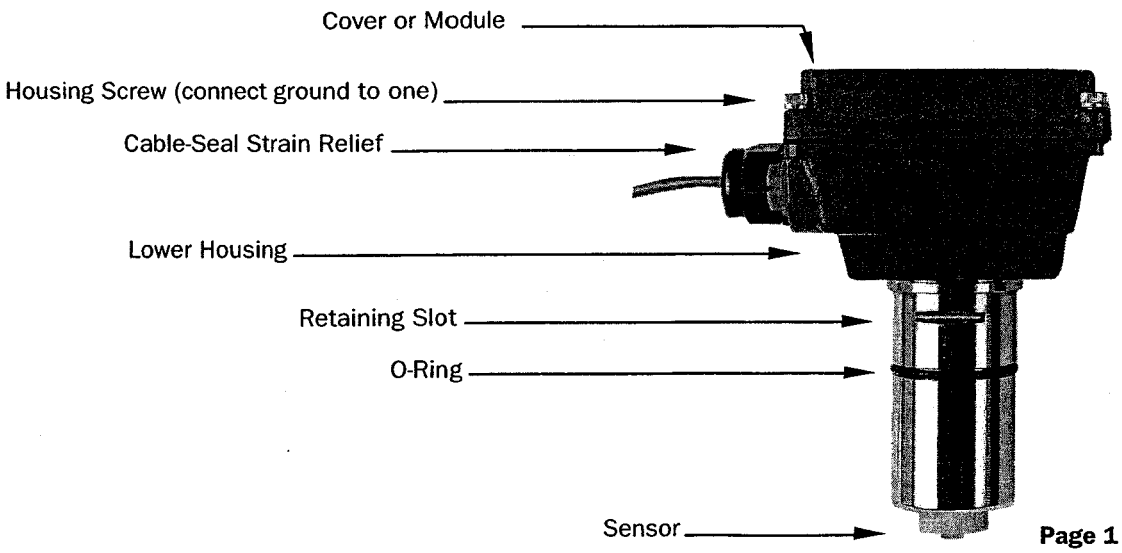

STRAIGHT PIPE RECOMMENDATIONS

(x = diameter)

Reduced Pipe

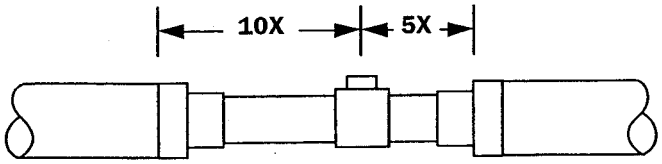

Two Elbows In Plane

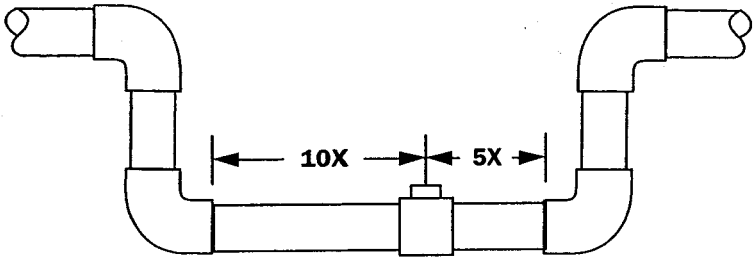

Two Elbows, Out Of Plane

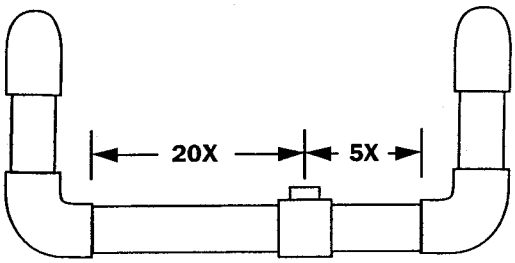

Expanded Pipe

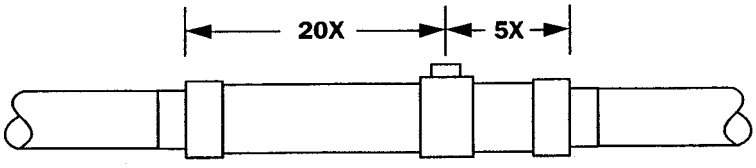

Spiral Flow

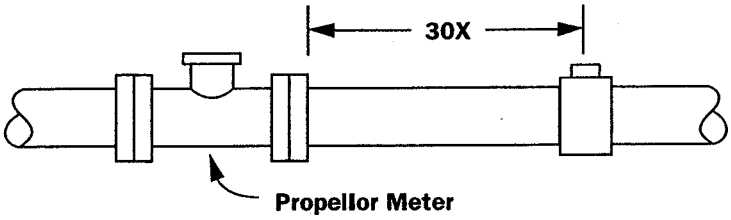

Swirling Flow

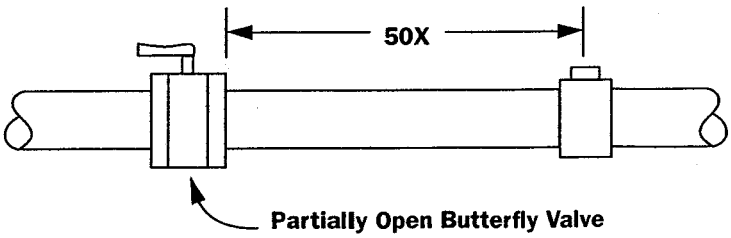

ELECTRICAL CONNECTIONS

General Electrical Guidelines:

- Whenever possible avoid running control cables in the same conduit with AC power. Use shielded control cable where this type of installation is necessary.
- If using shielded cable, be sure that one end is grounded
- Avoid routing flow sensor cables in close proximity to a variable frequency drive.
- Recommended power and output wiring is 18-22 AWG control cable, shielded if the run length is more than 18 feet (6 meters).
- Recommended voltage is 12-24 VDC. Note that unregulated power supplies can vary from nameplate voltage by a considerable amount. When in doubt, use a regulated power supply.

See the Connections diagrams on the following pages, for the appropriate terminals.

Power: A 12 - 24 Vdc power supply which is capable of at least 250 mA current output is needed.

Pulse Output: This open-collector isolated output does not supply power. It functions like a polarity-sensitive switch closure. It reaches a maximum of 500 Hz at the maximum flow rate of 20 feet/second. This pulse is generated in both forward and reverse flow directions (see "Direction" below). ***Note:*** This output is limited to 5 mA at 30 Vdc maximum.

Direction Indicator: This output is switched by a solid state relay, which is not polarity sensitive. It is "off" (open) when flow is in the forward direction and "on" (closed) when flow is in the reverse direction. ***Note:*** this output is limited to 100 mA at 150 Vdc maximum.

Grounding Guidelines:

- For best results, use a good quality earth ground, such as metallic water piping, or a stake driven into the ground.
- If the flow sensor is installed in metallic piping, for optimum grounding clamp wires to the piping a short distance to either side of the flow sensor using hose-type clamps. Connect these wires to the earth ground and to one of the housing screws.

GROUNDING DIAGRAM

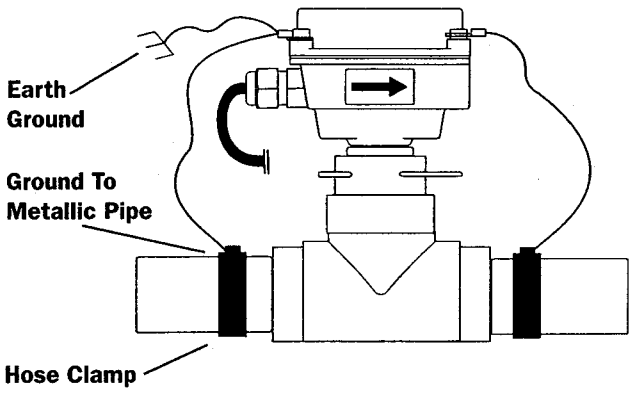

CONNECTIONS DIAGRAMS

FT420 DISPLAY AND PROPORTIONAL FEED

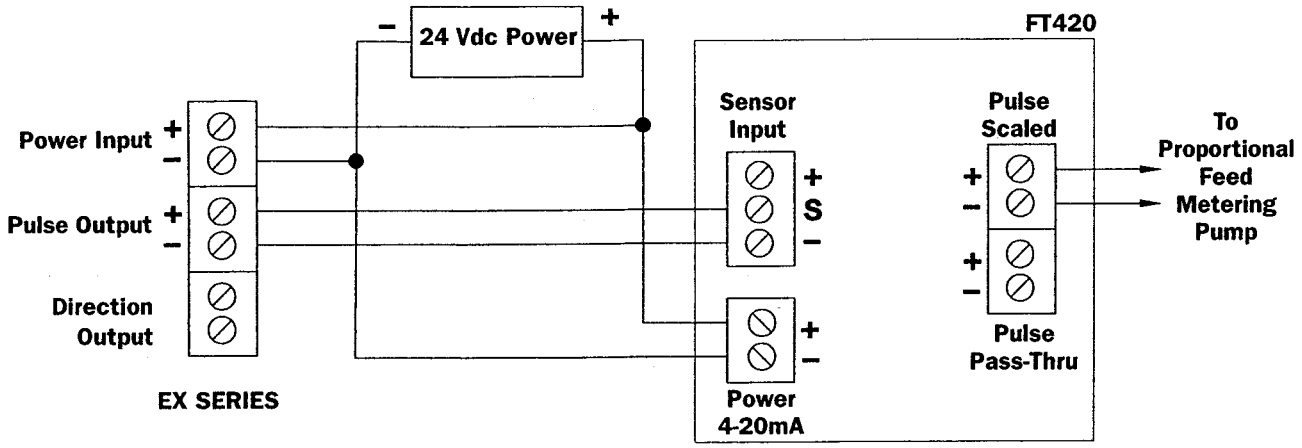

FT420 DISPLAY AND 4-20 mA OUTPUT

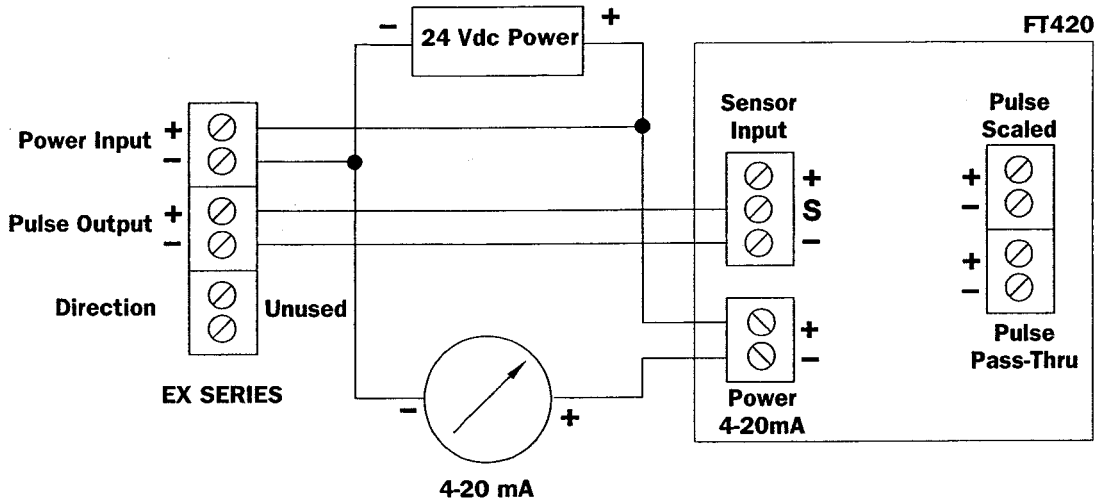

FS30 FLOW SWITCH

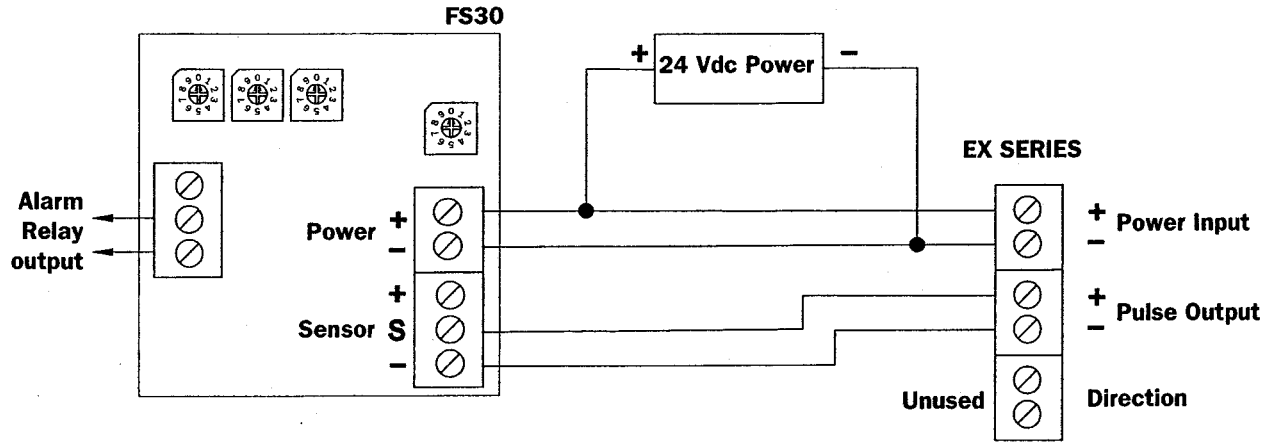

TROUBLESHOOTING

Problem	Probable Cause	Try...
No pulse output	Pipe not full	Check Plumbing
	Unit not grounded	Connect to earth ground
	Excessive electrical noise	Check for proper electrical wiring
	No power	Check for power across power input terminals
	Power Reversed	Reverse connections
	Output connections reversed	Change output connections
	Fluid conductivity <20 microseimans/cm	Select another flow meter
Output pulses incorrect	Missing or incorrect ground wire	Check for proper ground
	Excessive electrical noise	Check for proper electrical wiring
	Fluid conductivity <20 microseimans/cm	Select another flow meter
	Empty pipe	Check for full pipe or install meter in the vertical position
	Not enough straight pipe	Check for ten diameters upstream *AND* five diameters downstream

SeaMetrics

FT420 Flow Computer Specifications

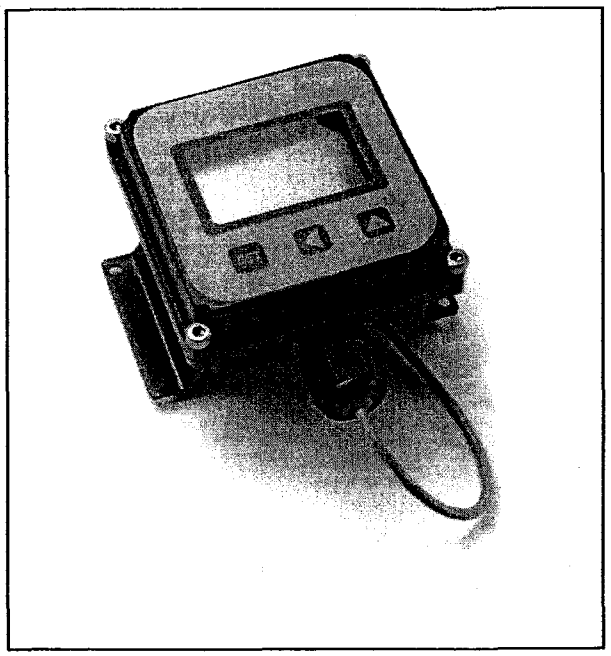

Specifications

Power	4 mA DC (4-20 mA loop), 12-32 VDC
Display	
Rate	6-digit autorange, 1/2" character height
Total	8-digit, 5/16" character height
Pulse Output	• 0.1 second open collector pulse (scaled) • high alarm or low alarm • sensor pulse (unscaled)
Input	Pulse frequency + 5 VDC
K factor Range	0.050 - 999999.9
Pulse Output Range	0.1 - 200,000 units/pulse
Flow Alarm Output Range	0.1 - 999999.99
Temperature	0 C - 70 C
Environmental	NEMA 4X

General Information

The FT420 is a loop-powered microcontroller-based transmitter/indicator. It displays rate and total, and provides a 4-20 mA analog signal proportional to flow. A programmable pulse output is also standard for metering pump control or data logging.

The rugged cast-aluminum housing is gasketed for maximum environmental protection, and the electronics are potted into a solid block of urethane. A membrane keypad allows settings to be changed without removing the cover. The FT420 can be factory or field installed on any IP, TX, or EX series sensor or WT meter.

Typical 4-20 mA Application

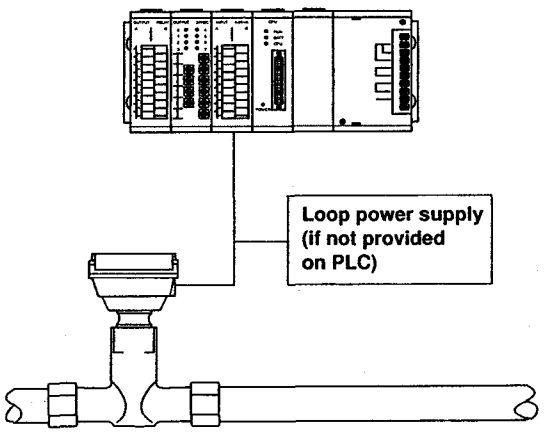

SeaMetrics

FT420 Flow Computer Instructions

General Information

The FT420 is a loop-powered microcontroller-based transmitter/indicator. It displays rate and total, and provides a 4-20 mA analog signal proportional to flow. A programmable pulse output, high flow or low flow alarm are also standard for metering pump control or data logging.

The rugged cast-aluminum housing is gasketed for maximum environmental protection, and the electronics are potted into a solid block of urethane. A membrane keypad allows settings to be changed without removing the cover. The wall mount version comes with brackets for mounting. An adapter kit (part No. MK20) allows field mounting on 80-series flow sensors. The FT420 can also be factory installed on a TX100/200 series sensor or WT meter.

Specifications

Power	4 mA DC (4-20 mA loop), 12-32 VDC
Display	
Rate	6-digit autorange, 1/2" character height
Total	8-digit, 5/16" character height
Pulse Output	• 0.1 second open collector pulse (scaled) • high alarm or low alarm • sensor pulse (unscaled)
Input	Pulse frequency + 5 VDC
K factor Range	0.050 - 999999.9
Pulse Output Range	0.1 - 200,000 units/pulse
Flow Alarm Output Range	0.1 - 999999.99
Temperature	0 C - 70 C
Environmental	NEMA 4X

Features

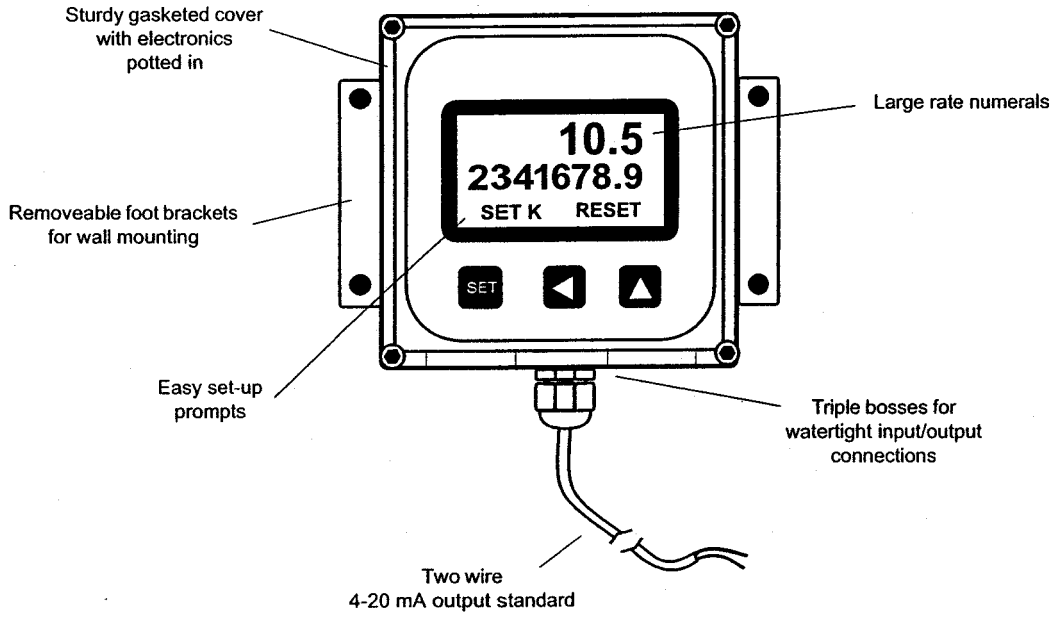

Sensor Mount: Step 1

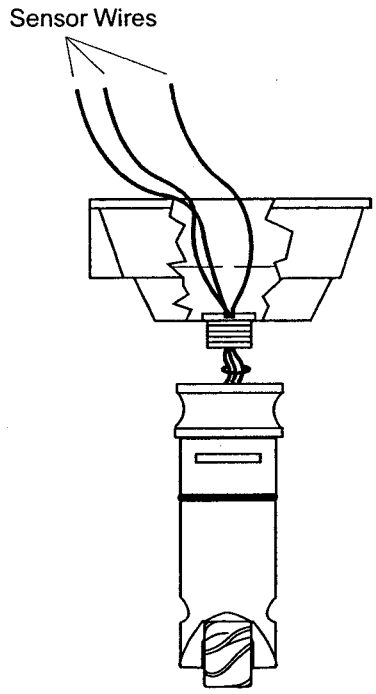

Sensor Mount: Step 2

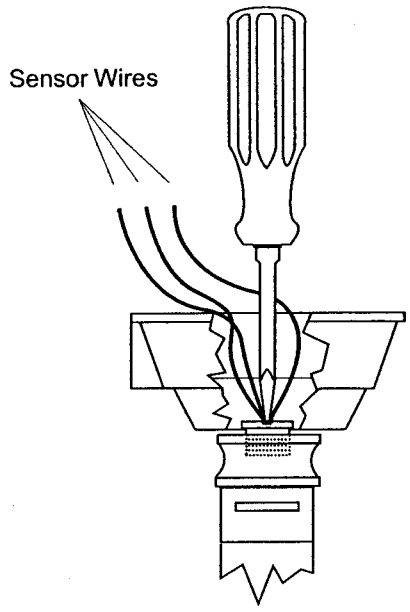

Standard Connections

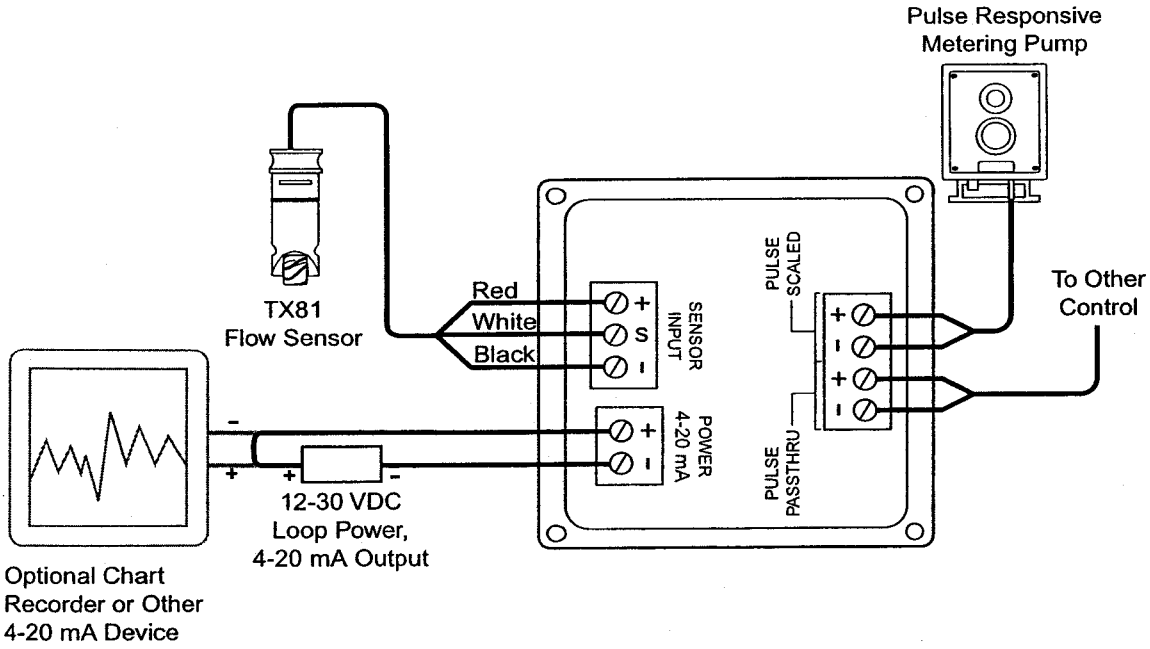

SeaMetrics

Technical Bulletin
FT420 "Error 2" Message

On certain early FT420 flow computers, a message appears when the unit exceeds its maximum total of 9,999,999 units. Rather than an automatic rollover, these units show a message on the display of "Err 2". This indicates that the totalizer needs to be manually reset.

To reset the total to zero, turn off power to the unit while holding down the Reset button (see photo). Continue holding the button down, and turn the power back on. This will reset the totalizer to zero.

The units which have this characteristic were manufactured between November of 2000 and February of 2001. If the first four digits of the serial number are 1100, 1200, or 0101, the unit probably is configured for manual reset. Later units have automatic rollover, and the "Err 2" message will not be displayed.

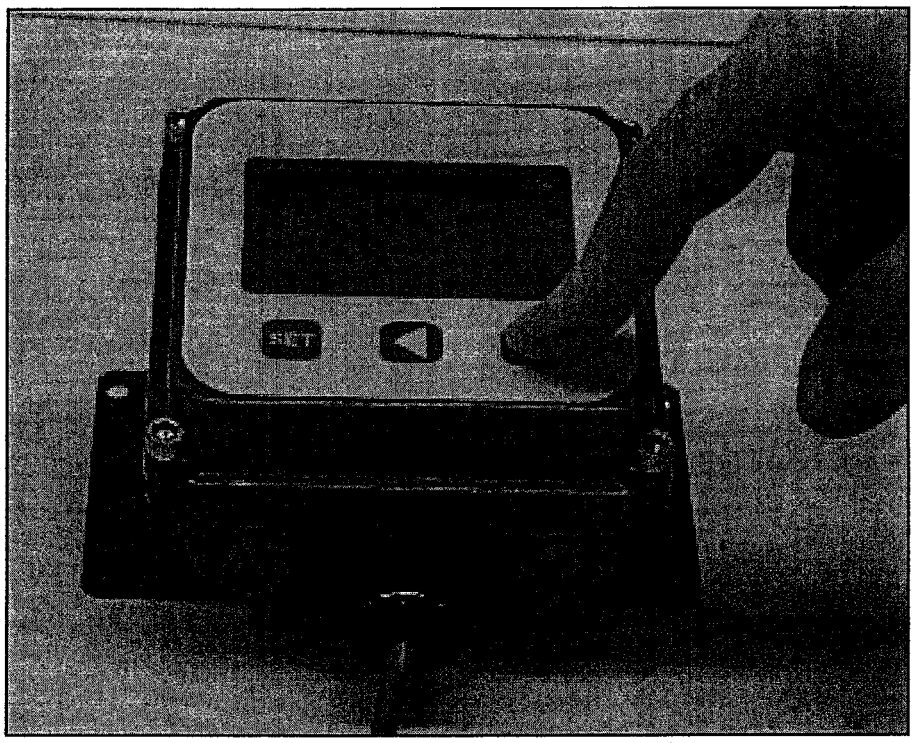

SeaMetrics
20419 80th Ave. So., Kent, WA 98032 USA
Phone: 253-872-0284 Fax: 253-872-0285
www.seametrics.com 1-800-975-8153

SeaMetrics

Technical Bulletin
FT 420 Redesign

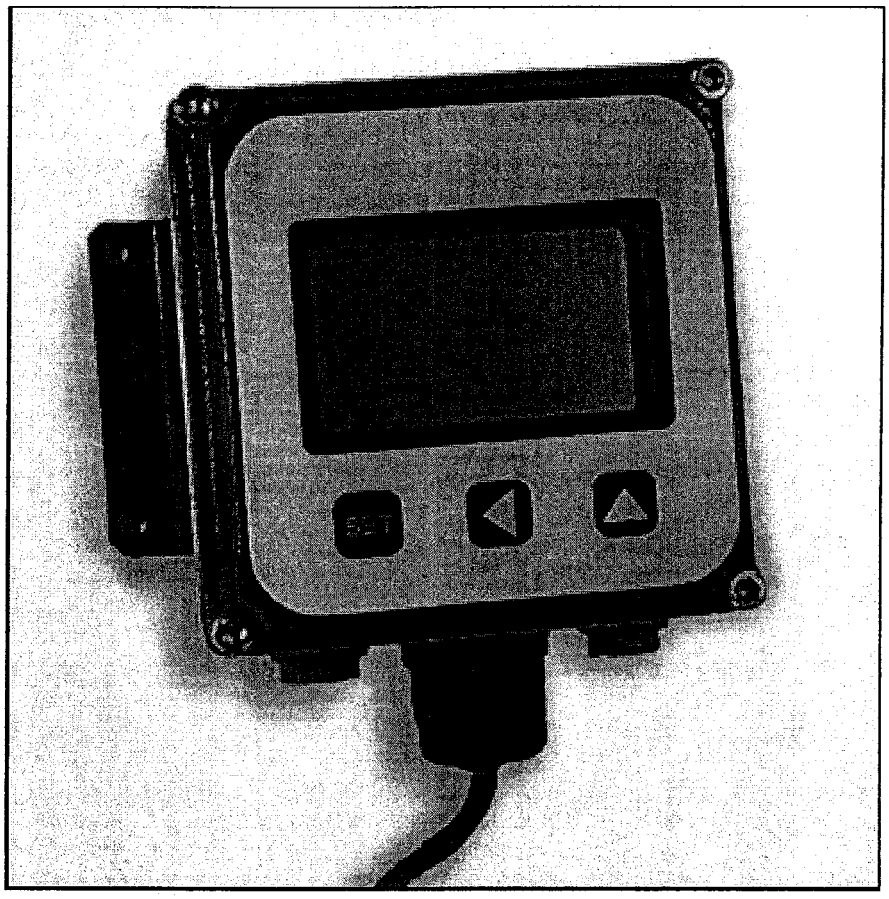

In October, SeaMetrics began shipping an upgraded version of the FT420. The upgrade was originally done for internal manufacturing purposes, so that we could shorten delivery times. However, in the process we were able to make some other worthwhile additions to features.

One of the main improvements is the change to a relay pulse output. In the past, relay output had to be ordered as an option. Now it is a standard feature. Another big improvement is the built-in choice of time base. Now, the rate reading can be in units such as gallons per day or liters per second.

PVC, CPVC & PP DIAPHRAGM VALVES

DV-2-0603

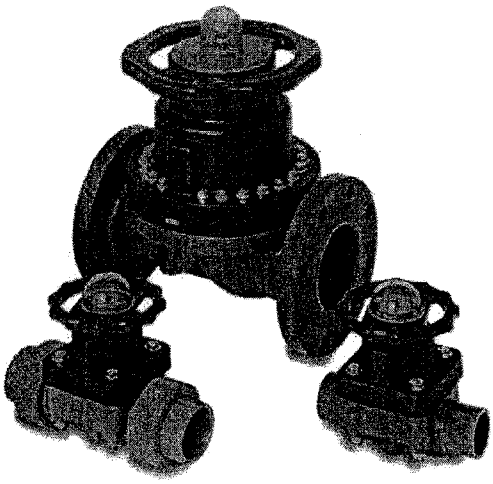

Low Profile Design

Minimizes space required to install and operate. Allows compact system planning and engineering in even the most demanding applications.

Multiple End Connector Options

Spigot, flanged, or true union socket/thread ends provides greater versatility for all applications. Popular true union style features strong buttress threaded union nuts with both socket and threaded end connectors included with each valve.

Heavy Bodied Schedule 80 PVC, CPVC or PP Construction with Mountable Body

Schedule 80 smooth-wall construction provides extra strength and superior chemical and corrosion resistance while maximizing fluid flow. Body can be easily secured to support surface using built-in mounting holes with user supplied self-tapping screws.

Choice of Chemical/Abrasion Resistant Elastomeric or PTFE Diaphragms

Choice of high grade, abrasion resistant EPDM, Viton®, or elastomer backed PTFE diaphragm allows application-specific selection for optimum chemical resistance. Diaphragm tab marking provides quick elastomer type identification.

Easy-Grip Handle with Clear-View Position Indicator

High Impact polypropylene handwheel style handle provides a firm grip for smooth, easy operation. Clear-View indicator with highly visible yellow marker shows valve position at a glance.

Silicon-Free Assembly

Precision Engineered

This full-featured valve is engineered to provide accurate throttling control and shutoff for industrial, chemical and water treatment applications. Weir-type design eliminates entrapped fluids in valve and is excellent for handling liquids with suspended solids, viscous fluids and slurries. Available in PVC, CPVC and Glass Filled Polypropylene with a variety of Diaphragm material options. PVC & CPVC 1/2" - 2" valves with Flanged Body, Spigot Body or True Union style Socket & Thread ends or Optional Stainless Steel Reinforced (SR) Threads, and sizes 2-1/2" - 8" with Flanged Body. Polypropylene 1/2" - 2" valves with True Union style Stainless Steel Reinforced (SR) Thread ends and sizes 2-1/2" - 8" with Flanged Body.

Sample Engineering Specification

All thermoplastic Diaphragm valves shall be Weir-type constructed from PVC Type I, ASTM D 1784 Cell Classification 12454 or CPVC Type IV, ASTM D1784 Cell Classification 23447, or Polypropylene, ASTM D 4101. All diaphragms shall be EPDM, genuine Viton® or PTFE with[EPDM or Viton®] bonded backing. All valves shall have built-in position indicator with polypropylene handwheel. All True Union style valve union nuts shall have Buttress threads. All PVC and CPVC 1/2" through 2" valves shall be pressure rated to 235 psi, all 2-1/2" through 4" and all flanged valves shall be pressure rated to 150 psi, all 6" valves shall be pressure rated to 100 psi, and all 8" valves shall be pressure rated to 75 psi for water at 73° F. All Polypropylene valves shall be pressure rated to 150 psi for water at 73° F, as manufactured by Spears Manufacturing Company.

Viton® is a registered trademark of DuPont Dow Elastomers.

MADE IN THE U.S.A. WITH PRIDE

LPCB LOSS PREVENTION CERTIFICATION BOARD — NATIONAL ACCREDITATION OF CERTIFICATION BODIES

Quality Systems Certificate No. 293
Corporate Facilities, Sylmar, CA
Assessed to ISO 9001

PROGRESSIVE PRODUCTS FROM SPEARS INNOVATION & TECHNOLOGY

Visit our web site: www.spearsmfg.com

TAB H
GAUGES AND INSTRUMENTS

BULLETIN NO. 120/02
(Supersedes 120/01)

Mid-West®
Instrument

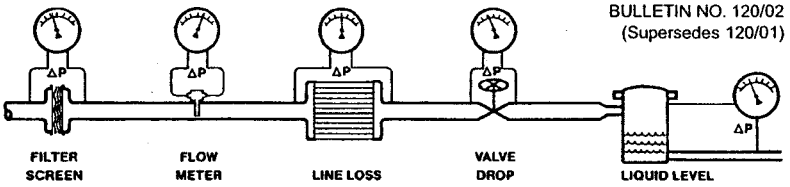

Model 120 Series "Filter Minder"®
Piston-Type Differential Pressure Gauge

MEDIUM RANGE: 0-5 P.S.I.D. to 0-110 P.S.I.D. (0.35 to 7.0 bar)

A low cost differential pressure gauge for use in measuring the pressure drop across filters, strainers, separators, valves, pumps, chillers, etc., and for local flow indication and control.

- Simple, rugged, compact design.
- Working pressure 6000 P.S.I.G. (400 bar) models 120-A and 120-S.
- Working pressure 5000 P.S.I.G. (340 bar) models 120-M and 120-N.
- Over-range protection to max. pressure.
- Aluminum or 316 stainless steel housing with 316 stainless steel internals.
- Monel or Aluminum Bronze housing with monel internals.
- Weather-resistant construction standard.
- Accuracy ±3-2-3% full scale (ascending).
- Shatter resistant lens.
- More cost effective and more accurate than using two pressure gauges in monitoring differential pressure.
- 2-1/2" and 4-1/2" plastic dial assemblies.

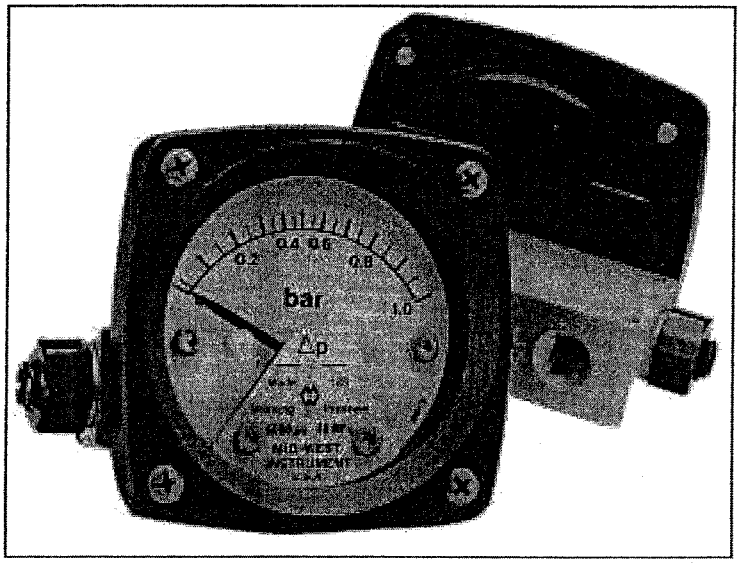

2-1/2" Plastic Dial Assy.

- 3-1/2" and 4-1/2" annodized aluminum dial assemblies.
- Uni-directional or bi-directional.
- Five Year Limited Warranty

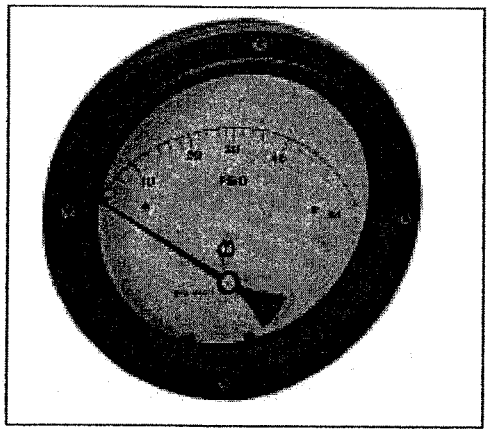

4-1/2" Plastic Dial Assy

Differential pressure is sensed by the movement of a floating piston magnet against a calibrated spring. The gauge pointer, outside the pressure housing, follows the movement of the piston magnet and indicates differential pressure.

Available with magnetically actuated hermetically sealed CSA listed reed switches to provide high and low limit alarm or control.

An optional maximum indication follower pointer provides automatic indication of maximum differential occuring during a time period or system cycle.

Reversed pressure ports are optionally available to facilitate installation and readability depending on which side of a filter, etc., the instrument must be installed.

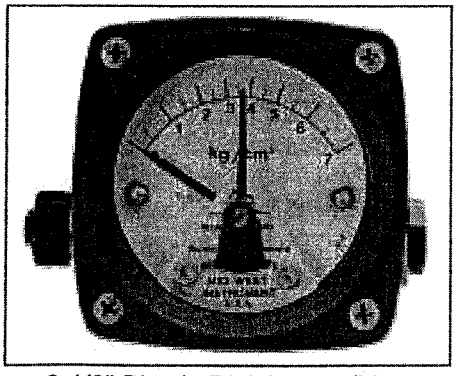

2-1/2" Plastic Dial Assy. w/Max. Follower Pointer

Reed Switch Ratings
(Resistive Load)

Type	SPST	SPST	SPDT	SPDT
Option:	B,C,D***	E,F,G	H	A
*Power	50 W	60 W	60 W	3 W
Max. Current	0.5 Amps	3.0 Amps	1.0 Amps	0.25 Amps
Max. Voltage VAC/VDC	240	240	240	125
**Setting (%F.S.)	10 to 100	25 to 95	25 to 100	10 to 90
Hysterisis (Max/Nom)	10% / 2% (F.S.)	15% / 8% (F.S.)	20% / 13% (F.S.)	10% / 5% (F.S.)
Repeatability	1% F.S.	1% F.S.	1% F.S.	1% F.S.
Leads 22 Awg.	(2), 24"	(2), 24"	(3), 24"	(3), 24"

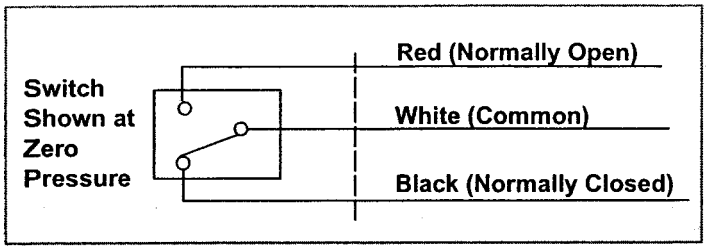

*Product of the Switching Voltage & Current shall not exceed power rating of the device.
**Except where otherwise noted.
***B, C, & D options are available, however they are not identified in Electrical Specifications. (Recommend using E, F, or G)

STANDARD MODEL SPECIFICATIONS

120-AA-00-OO

6000 P.S.I.G. Working Pressure Aluminum Body, Stainless Steel Piston, Ceramic Magnets, Buna N Seals, 2-1/2" Engineering Plastic Case with Shatter-Resistant Lens. 1/4" FNPT Back Connections. Accuracy ±3-2-3% Full Scale (Ascending).

PART NUMBERING SYSTEM

1 2 0 - □□ - □□ - □□□□ - □□□

① BASIC MODEL NUMBER

② MATERIAL
- A. Aluminum Body, S.S. Piston (Standard)
- M. Monel Body (See 120 ABM) (5000 P.S.I.G. working pressure)
- N. Aluminum Bronze Body (See 120 ABM) (5000 P.S.I.G. working pressure)
- S. 316 S.S. Body & S.S. Piston (Standard)
- Z. SPECIAL (Uncoded Options)

③ DIAL TYPE
- A. 2-1/2" Round Uni-Directional Engrd. Plastic Housing Assy. (Standard)
- B. 2-1/2" Round Bi-Directional Engrd. Plastic Housing Assy.
- C. 4-1/2" Round Uni-Directional Engrd. Plastic Housing Assy.
- D. 4-1/2" Round Bi-Directional Engrd. Plastic Housing Assy.
- E. 3-1/2" Round Uni-Directional Anod. Aluminum Housing Assy.
- F. 3-1/2" Round Bi-Directional Anod. Aluminum Housing Assy.
- G. 4-1/2" Round Uni-Directional Anod. Aluminum Housing Assy.
- H. 4-1/2" Round Bi-Directional Anod. Aluminum Housing Assy.
- T. Non-Indicating Differential Pressure Switch Only (Select Appropriate Electrical Option)
- Z. Special (Uncoded Options)

④ SEALS
- 0. Buna N (Standard)
- 1. Viton*
- 2. Neoprene
- 4. Teflon*
- 5. Ethylene Propylene
- 6. Perfluoroelastomer
- 9. Special (Uncoded Options)

*Viton® is a Registered Trademark of DuPont Dow Elastomers.
**Teflon® is a Registered Trademark of DuPont.

⑤ CONNECTIONS
(NOTE: Models 120M and 120N available only with end connections)
- 0. 1/4" FNPT Back Connections (Standard)
- 2. 1/4" FNPT End Connections
- 6. 7/16" - 20 Str. Thd. O-Ring Port (Back Connections)
- 7. 1/2" FNPT Stainless Steel Adaptors
- 8. 1/2" FNPT Monel Adaptors
- 9. Special (Uncoded Options)

⑥ OPTIONS (Up to four options)
- O. None (Standard)
- A. Reversed High/Low Process Connections
- B. DIN2353 12-S (12mm) Steel Tube Fittings (2)
- C. Mounting Holes in Gauge Body for Field Mounting of Electrical Configurations Options A & B
- D. Mounting Holes in Gauge Body for Field Mounting of Electrical Configurations Options L & M
- F. Pipe Mounting Kit (Carbon Steel) (Not available w/C or D Electrical Switch Options)
- L. Liquid Fill (Not available w/follower pointer) (Not available with 3-1/2" dial)
- M. Maximum Indicator Follower Pointer
- T. Oxygen Cleaning
- U. S.S. Tag Mounted w/S.S. Wire
- V. S.S. Tag Mounted w/S.S. Screws
- W. Wall Mounting Kit
- X. Individual Gauge Packaging
- Z. Special (Uncoded Options)

⑦ ELECTRICAL CONFIGURATIONS
(NOTE: All options ᴱᴱ marked, except E, F, J & K)
- O. None
- A. One (1) Switch in STD. Enclosure with Grommet Wire Seal
- B. Two (2) Switches in STD. Enclosures with Grommet Wire Seal
- C. One (1) Switch in STD. Enclosure with 1/4" FNPT Electrical Connection NEMA 4X
- D. Two (2) Switches in STD. Enclosures with 1/4" FNPT Electrical Connection NEMA 4X
- E. One (1) Switch in General Purpose Enclosure, C.S.A. & U.L. Listed, Division II Locations [1] [3]
- F. Two (2) Switches in General Purpose Enclosure, C.S.A. & U.L. Listed, Division II Locations [1] [3]
- G. One (1) Switch & Gauge in NEMA 4X Plastic Enclosure (Not Available With End Connections)
- H. Two (2) Switches & Gauge in NEMA 4X Plastic Enclosure (Not Available With End Connections)
- J. One (1) Switch in Explosion Proof Enclosure with Glass Window Cover and C.S.A. & U.L. Listing [2]
- K. Two (2) Switches in Explosion Proof Enclosure with Glass Window Cover and C.S.A. & U.L. Listing [2]
- L. One (1) Switch in STD. Enclosure with Plug-In Connector (DIN 43650/IP65-PG11)
- M. Two (2) Switches in STD. Enclosure with Plug-In Connector (DIN 43650/IP65-PG11)
- Z. Special (Uncoded Options)

[1] Complete Assembly Rated Class I, Div. II, Groups A, B, C, & D; Class II, Div. II, Groups F and G.
[2] Complete Assembly Rated Class I, Div. I, Groups C & D; Class II, Div. I, Groups E, F, & G.
[3] 5000 PSIG Working Pressure.

⑧ ELECTRICAL SPECIFICATIONS (For Resistive Loads)
- A. S.P.D.T., 3W, 0.25 Amp., 125 VAC/VDC (Standard) (Switch adjustable range of 10-90%)
- E. S.P.S.T., 60W, 3.0 Amp., 240 VAC/VDC (Normally Open) (Switch adjustable range of 25-95%)
- F. S.P.S.T., 60W, 3.0 Amp., 240 VAC/VDC (Normally Closed) (Switch adjustable range of 25-95%)
- G. S.P.S.T., 60W, 3.0 Amp., 240 VAC/VDC One (1) Normally Open, One (1) Normally Closed [4]
- H. S.P.D.T., 60W, 1.0 Amp., 240 VAC/VDC (Switch adjustable range of 25-100%)
- Z. Special (Uncoded Options)

[4] Available with Electrical Configurations B, D, F, H, K and M only.

⑦ ⑧ - (Up to three options)

NOTE: NOT ALL OPTIONS AVAILABLE IN COMBINATION WITH OTHER OPTIONS.

NOTE: FACTORY PRESET SWITCHES AT NO CHARGE (SPECIFY SETTING)

NOTE: THE USE OF DIAPHRAGM SEALS IS NOT RECOMMENDED FOR MODEL 120 SERIES GAUGE. ATTEMPTS TO INSTALL SUCH SEALS ON THIS GAUGE WILL VOID THE WARRANTY.

McDANIEL

Liquid Fillable, All Stainless Steel
Utility Gauges

The rugged construction of our series K9 all stainless steel gauges provides resistance to corrosive media and harsh environments.

The McDaniel K9 gauges feature 316 stainless steel wetted parts and a 304 stainless steel case with crimped on bezel ring. The case/socket joint is welded. Liquid fillable, in the field, or factory.

This series is ideally suited for O.E.M. and/or corrosive applications that require an all stainless steel gauge at an economical price.

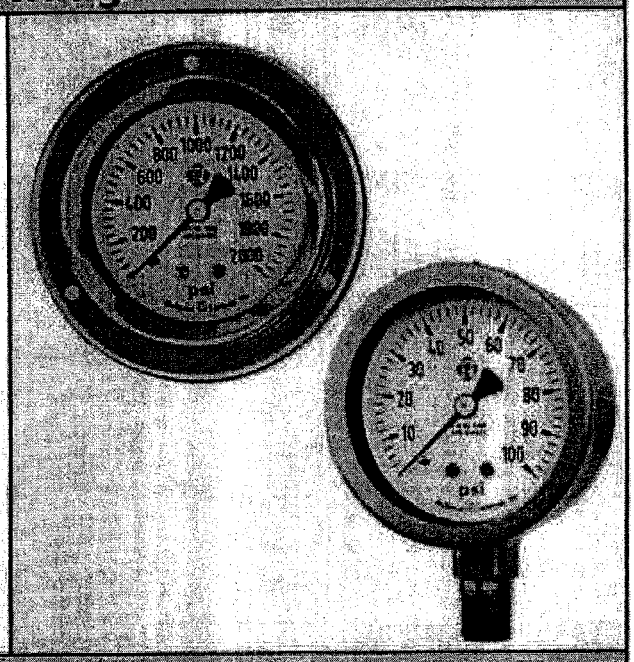

SPECIFICATIONS

Accuracy:
ASME B40.1 standard Grade A (2-1-2%)

Dial:
White enameled aluminum. Black figures.
2 ½" in. (63mm)

Case:
304 Stainless steel, filled or fillable.

Ring:
304 Stainless steel crimped on. (Polished on Panel, U-Clamp, and Lower-back Configurations)

Pointer:
Black enameled aluminum.

Lens:
Polycarbonate.
(Laminated Safety Glass by special order.)

Precision Movement
Stainless steel

Bourdon Tube:
316 Stainless steel (C Form 1000 PSI & Below).
(Spiral 1500 PSI & Above).

Pressure Utilization:
300% full scale pressure without rupture of the bourdon tube.
130% full scale pressure without loss of accuracy.

Stem and Socket:
316 Stainless steel.
Removable restrictor screw standard. (.022 in. / .7mm orifice)
One piece welded connection.

Ranges Available
Vacuum, Compound, Rec 3-15, up to 10,000 psi

Configurations Available:
Bottom connected standard
(L) = Lower-back connected
(U) = U-Clamp mounted, Lower-back connected
(P) = Front Flange, Lower-back connected

McDaniel Controls, Inc.

P. O. Box 187, Luling, LA 70070 • Highway 90 West, Paradis, LA 70080 U.S.A.

TAB I
SPARE PARTS

TAB J
QC REPORT

TAB K
SYSTEM ENGINEERING DRAWINGS

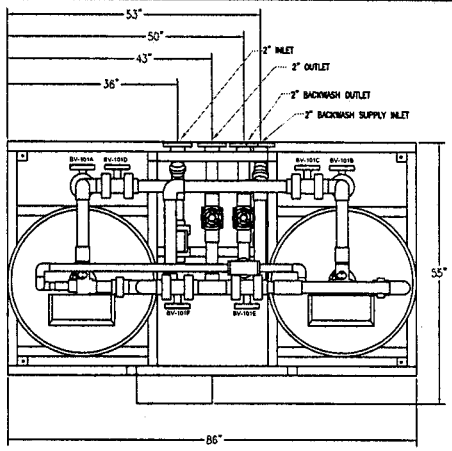

ΔP - PRESSURE DIFFERENTIAL GAUGE
PI - PRESSURE GAUGE
SV - SAMPLE VALVE
FE - FLOW ELEMENT
BV - BALL VALVE
DV - DIAPHRAGM VALVE

NOTE:
1. ALL DIMENSIONS ARE +/-1"
2. ALL PIPING MATERIAL: PVC SCH80
3. SHIPPING WEIGHT = 870LBS

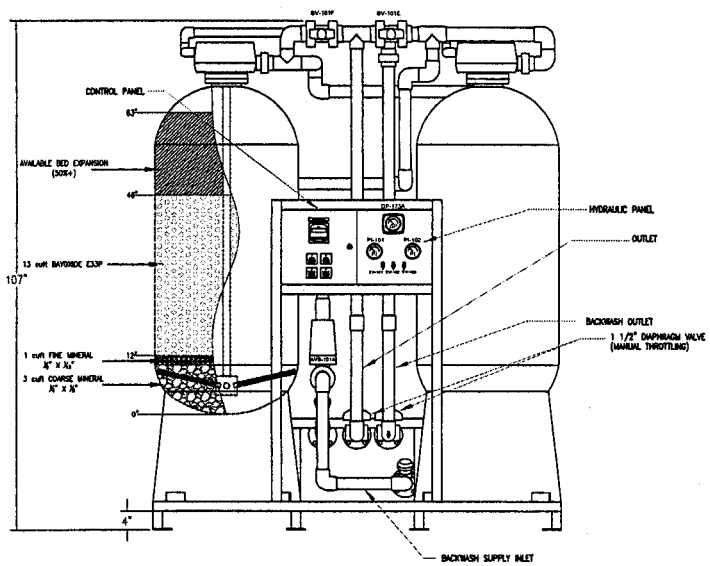

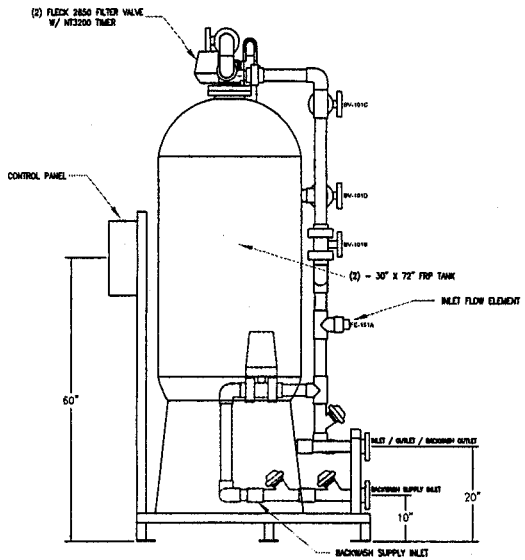

DO NOT SCALE DRAWING. REFER TO ADEDGE ENGINEERING DEPARTMENT FOR ALL DIMENSIONS.

5152 Belle Wood Court
Buford, GA 30518
678-835-0052 * 678-835-0057 Fax
www.adedgetechnologies.com

TIE	SERVICE CONNECTIONS	TYPE / MATERIAL
101	WELL WATER FEED INLET	2" FLANGE, PVC
102	TREATER WATER OUTLET	2" FLANGE, PVC
103	SYSTEM BACKWASH OUTLET	2" FLANGE, PVC
104	BACKWASH SUPPLY INLET	2" FLANGE, PVC

Title
GENERAL ARRANGEMENT DRAWING
MODEL: APU-25LL-S-2-B

Designed by	Checked by	Approved by	Project	Date	Scale
CN/AS	GG	GG	MPAZ-0706	07/28/06	NTS

Customer: MINGUS PANORAMA ESTSTES

Dwg. File	Rev.No	Sheet
6-41GA_A(0)	0	1 OF 1

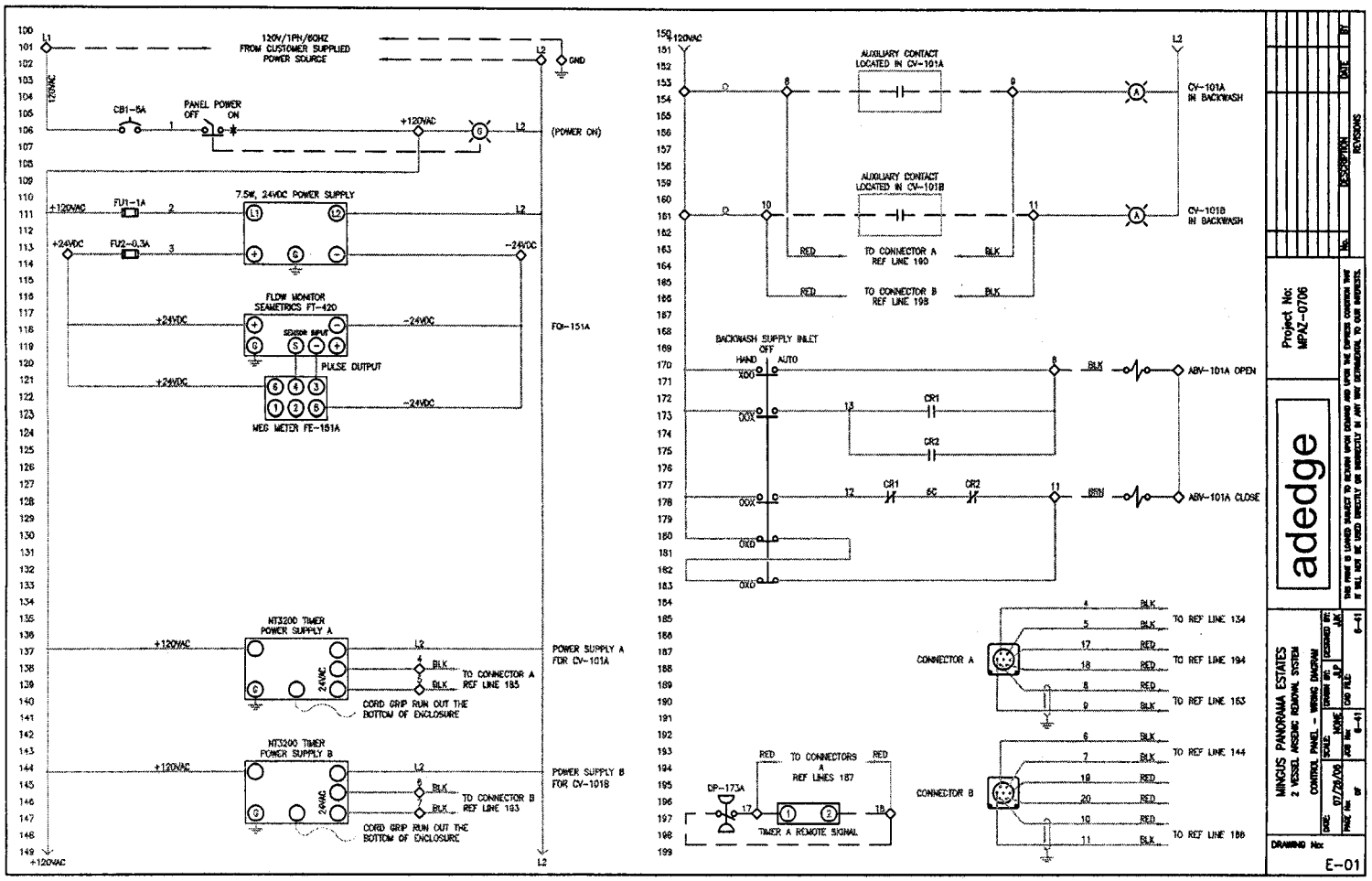
120V/1PH/60HZ
FROM CUSTOMER SUPPLIED
POWER SOURCE
GND
CB1-5A
PANEL POWER
OFF ON
+120VAC
(POWER ON)
FU1-1A
FU2-0.3A
7.5W, 24VDC POWER SUPPLY
+24VDC
-24VDC
FLOW MONITOR
SEAMETRICS FT-420
SENSOR INPUT
PULSE OUTPUT
FQI-151A
MEG METER FE-151A
MT3200 TIMER
POWER SUPPLY A
24VAC
TO CONNECTOR A
REF LINE 185
CORD GRIP RUN OUT THE
BOTTOM OF ENCLOSURE
POWER SUPPLY A
FOR CV-101A
MT3200 TIMER
POWER SUPPLY B
TO CONNECTOR B
REF LINE 193
POWER SUPPLY B
FOR CV-101B
AUXILIARY CONTACT
LOCATED IN CV-101A
CV-101A
IN BACKWASH
AUXILIARY CONTACT
LOCATED IN CV-101B
CV-101B
IN BACKWASH
TO CONNECTOR A
REF LINE 190
TO CONNECTOR B
REF LINE 198
BACKWASH SUPPLY INLET
OFF
HAND
AUTO
CR1
CR2
ABV-101A OPEN
ABV-101A CLOSE
CONNECTOR A
TO REF LINE 134
TO REF LINE 194
TO REF LINE 163
CONNECTOR B
TO REF LINE 144
TO REF LINE 188
DP-173A
TO CONNECTORS
A
REF LINES 187
TIMER A REMOTE SIGNAL
Project No:
MPXZ-0706
adedge
MINGUS PANORAMA ESTATES
2 VESSEL MISSING REMOVAL SYSTEM
CONTROL PANEL - WIRING DIAGRAM
DRAWING No:
E-01

TAB L
FIELD LOG SHEETS

Mingus Panorama Domestic Water System Site Project

Report Period: from Monday, _____ (mm/dd/yyyy) to Sunday, _____Week No:_____

Operator Notes and Comments

Day of Week	Date	Rountine O&M Record activities and observations pertaining to field measurements, replenishing solutions, ordering supplies, repairs,	Other Comments	Operator Initials
0	1	2	3	4
Mon				
Tue				
Wed				
Thu				
Fri				
Sat				
Sun				

Remarks: _____

_____

_____

_____

TAB M
WARRANTY

annum or the highest interest rate chargeable under the laws of the State of Georgia for such transactions.

2.6. Interest on unpaid balances shall be simple interest and shall accrue only on the unpaid principal balance due and owing. Interest shall accrue from the date appearing on the invoice after a default in payment as described above.

2.7. CLIENT shall communicate in writing to AdEdge any invoice errors, discrepancies or disputes within twenty (10) days of the invoice receipt date. If such communication is not so made the invoice will be deemed to be approved and CLIENT shall forever waive any error, discrepancy or dispute of which it was aware or through due diligence could have become aware.

2.8. All costs, charges and fees provided for herein and all payments by CLIENT shall be made in U.S. Dollars.

2.9. In the event of a default by CLIENT in the payment of any payment installment required by this Agreement and a continuation of such default for a period exceeding thirty (30) days from the due date of such payment, AdEdge may, without demand and/or requirement of written notification of the default, terminate and cancel this Agreement.

2.10. Upon notice to CLIENT from AdEdge of the election to terminate the Agreement, CLIENT shall forthwith pay to AdEdge all past due amounts plus such additional compensation as shall be necessary to compensate AdEdge for any unamortized balance of all capital expenditures made by AdEdge under the Agreement and all remaining anticipated profits which would have been realized by AdEdge but for the default and resulting cancellation.

3. TAXES

3.1 AdEdge shall be responsible for the payment of the following taxes associated with the services to be performed:

a) Taxes directly associated with the employment of AdEdge's employees, including but not limited to, employer's FICA contribution, Workman's Compensation, Insurance, Unemployment Insurance, and FUTA.

b) Local and Federal income taxes based on net profit to AdEdge.

3.2 In the event that any tax (or increased rate of tax) is enacted after the execution of this Agreement and such tax (or increase in rate) increases AdEdge's charges and expenses associated with the services under this Agreement, AdEdge's compensation pursuant to this Agreement shall be adjusted accordingly to reflect the increased cost, charge and expense.

3.3 The fees provided for in the Agreement are exclusive of state sales taxes, use taxes, gross receipt taxes, or other similar taxes, payment of which shall be an additional responsibility of CLIENT. CLIENT will be billed for state tax if he does not have an exemption or resale certificate.

3.4 Payment of any tax, custom, duty, fee, tariff, levy, and/or assessment levied by a governmental authority not specifically imposed on AdEdge by this Agreement shall be the responsibility of CLIENT.

4. RETAINAGE

work to be performed hereunder.

8.2 Neither party shall have any authority to employ any person as employee, agent, representative, or subcontractor for or on behalf of the other party for any purpose.

8.3 CLIENT shall not make any representation on behalf of AdEdge, nor shall CLIENT assume or create any obligation, expressed or implied, on behalf of AdEdge.

8.4 CLIENT agrees that for a period of one (1) year after the completion of the scope of work by AdEdge, CLIENT shall not hire or contract with any AdEdge employee or subcontractor assigned to perform duties in connection with this Agreement.

9. LIENS

9.1 AdEdge shall pay appropriately all of its indebtedness for material, equipment, supplies, tools, labor, services and all else used in the performance of this Agreement. AdEdge shall use its best efforts to prevent liens or charge to attach to CLIENT's property as a result of this Agreement and if any should attach then AdEdge shall promptly notify CLIENT and shall procure its release.

10. RESPONSIBLE MANAGING EMPLOYEE

10.1 Prior to the commencement of work under this Agreement, each party shall designate in writing one or more employees or other representatives of the party who shall have authority to approve changes in the Scope of Work and compensation therefore, execute written Change Orders reflecting such changes, render decisions promptly, and furnish information expeditiously to the other party.

11. FORCE MAJEURE

11.1 AdEdge shall not be liable under this Agreement for delays or other non-performance caused by any unusual occurrence beyond the AdEdge's reasonable control, including, but not limited to, war, fire, strikes, other labor troubles, unforeseeable breakage of equipment, accidents beyond the control of either party, acts of God, delays of common carriers, and unforeseeable actions of governmental authority, laws, rules and/or regulations.

11.2 Upon the occurrence of the force majeure, AdEdge shall give immediate notice to CLIENT of such and shall thereafter undertake all reasonable efforts to remedy and/or mitigate the force majeure.

12. WARRANTIES

12.1 The provisions of this Agreement or any other contract documents (as are specifically set forth infra) regarding time/date provisions imposed upon AdEdge are descriptive only and are neither guarantees or warranties by AdEdge unless expressly set forth so to be in this "Warranties" article or are specifically made subject to a "Time is of the Essence" provision.

12.2 All AdEdge employees and the employees of subcontractors of AdEdge shall be appropriately skilled to perform the work to which they are assigned. AdEdge employees and the employees of AdEdge's subcontractors shall be appropriately supervised by qualified persons in AdEdge's employment.

12.3 No process, equipment or material designed by AdEdge shall infringe upon any United States patent right.

(a) AdEdge shall defend, indemnify and hold harmless CLIENT from and against any claim and/or lawsuit arising directly from a violation of the warranty provided for in this Section; provided, however, that AdEdge retains the right to modify the work or license appropriate patent rights to avoid assertions

14.2 These contract documents and the Agreement supersede all prior agreements, whether written or oral, that may exist between the parties regarding this transaction.

14.3 Any modification or amendment of this Agreement must be in writing signed by a responsible managing employee (RME) of both parties.

15. GENERAL CONDITIONS

15.1 Attorney's fees and costs: In the event of any dispute between the parties necessitating litigation, the prevailing party shall be awarded its costs of suit, including reasonable attorney's fees.

15.2 Construction:

(a) The validity, interpretation and performance of this Agreement and all exhibits and attachments hereto and/or any amendment to this Agreement shall be governed exclusively in accordance with and by the laws of the State of Georgia.

(b) Headings appearing in this Agreement have been inserted for purpose of convenience and ready reference only. They do not purport to, and shall not be deemed to, define, limit or extend the scope or intent of the clauses to which they appertain.

15.3 *Venue:* In the event of any dispute between the parties arising under this Agreement, the parties agree that the civil courts or federal or circuit courts in and for the County of Gwinnett, State of Georgia, shall have exclusive jurisdiction and venue to determine such dispute(s) and each party hereby waives any objection to such jurisdiction and venue in any such court and any claim that such forum is an inconvenient forum.

15.4 *Notices:* All notices required by this Agreement shall be in writing and shall be sent to the other party by United States Postal Service, postage prepaid, at the party's address hereinabove given or such other mailing address as the party shall from time to time designate.

15.5 *Waiver:* Any waiver by either party of any provision or condition of this Agreement shall not be construed or deemed to be a waiver of any other provision or condition of this Agreement, nor a waiver of any subsequent breach of the same provision or condition.

15.6 *Separability*: If any section, subsection, paragraph, clause or sentence of this Agreement shall be adjudged illegal, invalid or unenforceable, such event shall not affect the legality, validity or enforceability of these remaining portions of this Agreement as a whole or any portion thereof.

15.7 *Successors & Assigns*: The covenants and agreements contained herein shall be binding on the parties hereto and their respective successors and assigns.

TAB N
MONITORING REPORTS

adedge

Manage the Elements

Monitoring Plan

APU-25LL Arsenic Treatment System
Mingus Panorama Site
Cornville, Arizona

Prepared for:

Mingus Panorama Domestic Water System
Cornville, Arizona

Prepared by:

Adedge Technologies, Inc
5152 Belle Wood Court, Suite A
Buford, Georgia 30518
678-835-0052 678-835-0057 fax
www.adedgetechnologies.com

July 2006

Water from the source well is pumped through a vessel or series of vessels containing the GFO media. As the water passes through the fixed bed of media, the arsenic is reduced to below 10 ppb until the media reaches its capacity. The spent media, which typically passes the U. S. Environmental Protection Agency (USEPA) toxicity characteristic leaching potential (TCLP) test, is then removed and disposed as non-hazardous waste. The media has a high capacity for arsenic that enables long operating life (typically 12 to 24 months between media change-out).

The proposed Mingus Panorama treatment system will have the following equipment:

- adsorption vessels/media;
- process valves and piping; and
- instrumentation and controls; and
- backwashing system.

A typical photograph of a modular treatment system is show in Figure 1 and a schematic diagram is presented as Figure 2 (at the end of this monitoring plan). The photograph in Figure 1 shows a skid-mounted adsorption system, piping, and instrumentation. The schematic diagram in Figure 2 depicts the piping and valves, treatment units, instrumentation, sampling ports, and gauges. Detailed design and engineering information is provided in a separate engineering document associated with these units.

3.0 WATER-QUALITY MONITORING PROGRAM

3.1 Introduction

The objectives of the monitoring program are as follows: (1) to establish the initial system performance with regards to arsenic removal; and (2) to establish initial and on-going compliance monitoring. Mingus Panorama will achieve these two objectives by implementing a water-quality monitoring program. As described in the following sections, the water-quality monitoring program incorporates semi-quantitative and quantitative analytical methods. Section 3.2 describes sampling locations; Section 3.3 lists the number and frequency of samples to be taken, and the sample protocols; and Section 3.4 describes the sample shipping and handling procedures.

analysis; the off-site sample bottles will contain nitric acid preservative which can cause chemical burns.);

- collect additional samples, as necessary, for pH analysis or other in-situ measured constituents;
- place the samples within the appropriate sample shipping unit; and
- continue to the next sampling port in the sequence and perform the same procedures listed above.

It is assumed that Mingus Panorama will collect water samples for off-site analysis in bottles provided by a certified laboratory. In accordance with Title 40 Code of Federal Regulations Part 141.23 (40 CFR 141.23), arsenic water samples can be collected in either clean plastic or glass containers. Each sample container for arsenic analysis should contain enough nitric acid preservative to reduce the pH of the sample to less than 2; those samples must be analyzed within a period of six months. Samples should be analyzed using USEPA Methods 200.8/6020 (i.e., inductively coupled plasma/mass spectrometric (ICP-MS)), or an equivalent method.

3.4 Sample Shipping and Handling

Sample bottles should be placed in appropriate shipping containers and shipped via overnight courier to the analytical laboratory. The sample bottles should be shipped under chain of custody procedures. The analytical laboratory will provide blank chain of custody forms and sample bottle labels. Chain of custody information will include the following:

- site location and contact information;
- names and signatures of individuals performing sample collection;
- sample identification numbers;
- number of sample containers;
- sample collection time and date;
- sample analyses requested and sample analysis methods; and
- time that samples were relinquished to courier.

Mingus Panorama personnel will track sample progress throughout the entire process. First, Mingus Panorama personnel will contact the analytical laboratory to ensure that the samples were received at the laboratory. Mingus Panorama personnel will then follow up periodically until sample analytical results are received. Analytical results will be managed in accordance with procedures described in Section 4 of this monitoring plan.

EXHIBIT G WATER QUALITY REPORTS

(6344918)(928 area code)

05-0503P
MINGUS PANORAMA

Northern Arizona Pump Co. P.O. Box 252 Cornville, AZ 86325	Project: New Source Project Number: Mack Project Manager: Nathan White	Reported: 03/16/05 14:37

ANALYTICAL REPORT FOR SAMPLES

Sample ID	Laboratory ID	Matrix	Type	Date Sampled	Date Received
Mack	5020883-01	Drinking Water	Grab	02/16/05 11:00	02/17/05 08:45

Case Narrative:

Holding Times: All holding times were met unless otherwise qualified.
QA/QC Criteria: All analyses met method requirements unless otherwise qualified.
Comments: There were no problems encountered during the processing of the samples, unless otherwise noted.

www.epa.gov>/safewater>mcl.html # MCLs
for (epa requirement for min. contaminant level)

EPA for water treatment 1-888-395-1033
(recommands water testing once a year)

* page 3 to 7 of this report is the Test Report
page 8 to 21 of this report is Legend's Techical's quality control method.

(602) 324-6100
Lisa

Northern Arizona Pump Co.	Project: New Source	
P.O. Box 252	Project Number: Mack	Reported:
Cornville, AZ 86325	Project Manager: Nathan White	03/16/05 14:37

ck (5020883-01) Drinking Water (Grab) Sampled: 02/16/05 11:00 Received: 02/17/05 08:45

Analyte	Result	RL	Units	Dilution	Batch	Prepared	Analyzed	Method	Notes
Inorganic Chemistry									
Total Alkalinity [(as CaCO3)]	**733**	10	mg/L	1	B502645	02/23/05	02/23/05	SM 2320 B	
Cyanide, total	<0.0097	0.0097	mg/L	1	B502695	02/24/05	02/25/05	SM 4500 CN E	
Fluoride	**0.41**	0.20	mg/L	1	B502478	02/18/05	02/18/05	SM 4500 F C	
Nitrate as N	<0.20	0.20	mg/L	1	[CALC]	02/22/05	02/22/05	Calculation	
Nitrate + Nitrite	**0.19**	0.10	mg/L	1	B502605	02/22/05	02/22/05	SM 4500 NO3 F	
Nitrite as N	<0.10	0.10	mg/L	1	B502464	02/17/05	02/17/05	SM 4500 NO2 B	
pH	**6.8**		pH Units	1	B502465	02/17/05	02/17/05	EPA 150.1	
Temperature	**19.4**		°C	1	B502465	02/17/05	02/17/05	EPA 150.1	
Sulfate	**45.6**	5.0	mg/L	10	B502495	02/17/05	02/17/05	EPA 300.0	
Total Dissolved Solids	**836**	1	mg/L	1	B502676	02/23/05	02/23/05	SM 2540 C	
Volatile Organic Compounds									**Q3**
Chloromethane [Methyl chloride]	<0.0005	0.0005	mg/L	1	B502618	02/22/05	02/22/05	EPA 524.2	
Vinyl chloride [Chloroethene]	<0.0005	0.0005	mg/L	1	B502618	02/22/05	02/22/05	EPA 524.2	
Bromomethane [Methyl bromide]	<0.0005	0.0005	mg/L	1	B502618	02/22/05	02/22/05	EPA 524.2	
Chloroethane	<0.0005	0.0005	mg/L	1	B502618	02/22/05	02/22/05	EPA 524.2	
1,1-Dichloroethene [1,1-Dichloroethylene]	<0.0005	0.0005	mg/L	1	B502618	02/22/05	02/22/05	EPA 524.2	
Dichloromethane [Methylene chloride]	<0.0005	0.0005	mg/L	1	B502618	02/22/05	02/22/05	EPA 524.2	
Methyl-tert-butyl ether [Methyl-t-butyl ether]	<0.0005	0.0005	mg/L	1	B502618	02/22/05	02/22/05	EPA 524.2	
s-1,2-Dichloroethene [trans-1,2-chloroethylene]	<0.0005	0.0005	mg/L	1	B502618	02/22/05	02/22/05	EPA 524.2	
1,1-Dichloroethane	<0.0005	0.0005	mg/L	1	B502618	02/22/05	02/22/05	EPA 524.2	
cis-1,2-Dichloroethylene	<0.0005	0.0005	mg/L	1	B502618	02/22/05	02/22/05	EPA 524.2	
2,2-Dichloropropane	<0.0005	0.0005	mg/L	1	B502618	02/22/05	02/22/05	EPA 524.2	
Chloroform [Trichloromethane]	<0.0005	0.0005	mg/L	1	B502618	02/22/05	02/22/05	EPA 524.2	
1,1,1-Trichloroethane	<0.0005	0.0005	mg/L	1	B502618	02/22/05	02/22/05	EPA 524.2	
1,1-Dichloropropene	<0.0005	0.0005	mg/L	1	B502618	02/22/05	02/22/05	EPA 524.2	
Carbon tetrachloride [Tetrachloromethane]	<0.0005	0.0005	mg/L	1	B502618	02/22/05	02/22/05	EPA 524.2	
1,2-Dichloroethane	<0.0005	0.0005	mg/L	1	B502618	02/22/05	02/22/05	EPA 524.2	
Benzene	<0.0005	0.0005	mg/L	1	B502618	02/22/05	02/22/05	EPA 524.2	
Trichloroethene [Trichloroethylene]	<0.0005	0.0005	mg/L	1	B502618	02/22/05	02/22/05	EPA 524.2	
1,2-Dichloropropane	<0.0005	0.0005	mg/L	1	B502618	02/22/05	02/22/05	EPA 524.2	
Dibromomethane	<0.0005	0.0005	mg/L	1	B502618	02/22/05	02/22/05	EPA 524.2	
Bromodichloromethane [Dichlorobromomethane]	<0.0005	0.0005	mg/L	1	B502618	02/22/05	02/22/05	EPA 524.2	
cis-1,3-Dichloropropene	<0.0005	0.0005	mg/L	1	B502618	02/22/05	02/22/05	EPA 524.2	
Toluene	<0.0005	0.0005	mg/L	1	B502618	02/22/05	02/22/05	EPA 524.2	
trans-1,3-Dichloropropene	<0.0005	0.0005	mg/L	1	B502618	02/22/05	02/22/05	EPA 524.2	
1,1,2-Trichloroethane	<0.0005	0.0005	mg/L	1	B502618	02/22/05	02/22/05	EPA 524.2	
1,3-Dichloropropane	<0.0005	0.0005	mg/L	1	B502618	02/22/05	02/22/05	EPA 524.2	
Tetrachloroethene [Tetrachloroethylene]	<0.0005	0.0005	mg/L	1	B502618	02/22/05	02/22/05	EPA 524.2	
Dibromochloromethane	<0.0005	0.0005	mg/L	1	B502618	02/22/05	02/22/05	EPA 524.2	
Chlorobenzene [Monochlorobenzene]	<0.0005	0.0005	mg/L	1	B502618	02/22/05	02/22/05	EPA 524.2	
,1,2-Tetrachloroethane	<0.0005	0.0005	mg/L	1	B502618	02/22/05	02/22/05	EPA 524.2	
ylbenzene	<0.0005	0.0005	mg/L	1	B502618	02/22/05	02/22/05	EPA 524.2	
m,p-Xylene	<0.0010	0.0010	mg/L	1	B502618	02/22/05	02/22/05	EPA 524.2	

Northern Arizona Pump Co.	Project: New Source	
P.O. Box 252	Project Number: Mack	Reported:
Cornville, AZ 86325	Project Manager: Nathan White	03/16/05 14:37

ck (5020883-01) Drinking Water (Grab) Sampled: 02/16/05 11:00 Received: 02/17/05 08:45

Analyte	Result	RL	Units	Dilution	Batch	Prepared	Analyzed	Method	Notes
Environmental Health Laboratories, UL #AZ0432									
EPA 505									
Aroclor 1016	<0.00008	0.00008	mg/L	1	N/A	03/01/05	03/01/05	EPA 505	
Aroclor 1221	<0.02	0.02	mg/L	1	N/A	03/01/05	03/01/05	EPA 505	
Aroclor 1232	<0.0005	0.0005	mg/L	1	N/A	03/01/05	03/01/05	EPA 505	
Aroclor 1242	<0.0003	0.0003	mg/L	1	N/A	03/01/05	03/01/05	EPA 505	
Aroclor 1248	<0.0001	0.0001	mg/L	1	N/A	03/01/05	03/01/05	EPA 505	
Aroclor 1254	<0.0001	0.0001	mg/L	1	N/A	03/01/05	03/01/05	EPA 505	
Aroclor 1260	<0.0002	0.0002	mg/L	1	N/A	03/01/05	03/01/05	EPA 505	
Chlordane	<0.0002	0.0002	mg/L	1	N/A	03/01/05	03/01/05	EPA 505	
Toxaphene	<0.001	0.001	mg/L	1	N/A	03/01/05	03/01/05	EPA 505	
EPA 515.3									
2,4,5-TP (Silvex)	<0.0002	0.0002	mg/L	1	N/A	02/22/05	02/23/05	EPA 515.3	
2,4-D	<0.0001	0.0001	mg/L	1	N/A	02/22/05	02/23/05	EPA 515.3	
Dalapon	<0.001	0.001	mg/L	1	N/A	02/22/05	02/23/05	EPA 515.3	
Dicamba	<0.0001	0.0001	mg/L	1	N/A	02/22/05	02/23/05	EPA 515.3	
Dinoseb	<0.0002	0.0002	mg/L	1	N/A	02/22/05	02/23/05	EPA 515.3	
Pentachlorophenol	<0.00004	0.00004	mg/L	1	N/A	02/22/05	02/23/05	EPA 515.3	
Picloram (Tordon)	<0.0001	0.0001	mg/L	1	N/A	02/22/05	02/23/05	EPA 515.3	
EPA 525.2									
Alachlor (Lasso)	<0.0002	0.0002	mg/L	1	N/A	02/22/05	02/25/05	EPA 525.2	
trin	<0.0001	0.0001	mg/L	1	N/A	02/22/05	02/25/05	EPA 525.2	
azine	<0.0001	0.0001	mg/L	1	N/A	02/22/05	02/25/05	EPA 525.2	
Benzo(a)pyrene	<0.00002	0.00002	mg/L	1	N/A	02/22/05	02/25/05	EPA 525.2	
Butachlor	<0.0001	0.0001	mg/L	1	N/A	02/22/05	02/25/05	EPA 525.2	
Di(2-ethylhexyl) adipate	<0.0006	0.0006	mg/L	1	N/A	02/22/05	02/25/05	EPA 525.2	
Di(2-ethylhexyl) phthalate	<0.0006	0.0006	mg/L	1	N/A	02/22/05	02/25/05	EPA 525.2	
Dieldrin	<0.0001	0.0001	mg/L	1	N/A	02/22/05	02/25/05	EPA 525.2	
Endrin	<0.00001	0.00001	mg/L	1	N/A	02/22/05	02/25/05	EPA 525.2	
Heptachlor	<0.00004	0.00004	mg/L	1	N/A	02/22/05	02/25/05	EPA 525.2	
Heptachlor epoxide	<0.00002	0.00002	mg/L	1	N/A	02/22/05	02/25/05	EPA 525.2	
Hexachlorobenzene	<0.0001	0.0001	mg/L	1	N/A	02/22/05	02/25/05	EPA 525.2	
Hexachlorocyclopentadiene	<0.0001	0.0001	mg/L	1	N/A	02/22/05	02/25/05	EPA 525.2	
Lindane (gamma-BHC)	<0.00002	0.00002	mg/L	1	N/A	02/22/05	02/25/05	EPA 525.2	
Methoxychlor	<0.0001	0.0001	mg/L	1	N/A	02/22/05	02/25/05	EPA 525.2	
Metolachlor (Dual)	<0.0001	0.0001	mg/L	1	N/A	02/22/05	02/25/05	EPA 525.2	
Metribuzin (Sencor)	<0.0001	0.0001	mg/L	1	N/A	02/22/05	02/25/05	EPA 525.2	
Propachlor	<0.0001	0.0001	mg/L	1	N/A	02/22/05	02/25/05	EPA 525.2	
Simazine	<0.00007	0.00007	mg/L	1	N/A	02/22/05	02/25/05	EPA 525.2	

Microbiology - Quality Control

Legend Technical Services of Arizona, Inc.

Analyte	Result	Reporting Limit	Units	Spike Level	Source Result	%REC	%REC Limits	RPD	RPD Limit	Notes
Batch B502517 - micro_prep										
Blank (B502517-BLK1)				*Prepared & Analyzed: 02/17/05*						
Total Coliforms	Absent		P/A							
E. coli	Absent		P/A							

Total Metals - Quality Control

Legend Technical Services of Arizona, Inc.

Analyte	Result	Reporting Limit	Units	Spike Level	Source Result	%REC	%REC Limits	RPD	RPD Limit	Notes
Batch B502642 - EPA 200.9										
LCS (B502642-BS1)				*Prepared: 02/23/05*		*Analyzed: 02/25/05*				
Arsenic	0.021		mg/L	0.0200		105	85-115			
Antimony	0.011		mg/L	0.0100		110	85-115			
Thallium	0.010		mg/L	0.0100		100	85-115			
Cadmium	0.0022		mg/L	0.00200		110	85-115			
Selenium	0.022		mg/L	0.0200		110	85-115			
Lead	0.022		mg/L	0.0200		110	85-115			
Matrix Spike (B502642-MS1)		**Source: 5020968-01**		*Prepared: 02/23/05*		*Analyzed: 02/25/05*				
Arsenic	0.022		mg/L	0.0200	0.00300	95.0	70-130			
Cadmium	0.0021		mg/L	0.00200	<	105	70-130			
Antimony	0.011		mg/L	0.0100	<	110	70-130			
Lead	0.020		mg/L	0.0200	<	100	70-130			
Thallium	0.010		mg/L	0.0100	<	100	70-130			
Selenium	0.022		mg/L	0.0200	0.00300	95.0	70-130			
Matrix Spike (B502642-MS2)		**Source: 5020946-16**		*Prepared: 02/23/05*		*Analyzed: 02/25/05*				
Lead	0.022		mg/L	0.0200	<	110	70-130			
Selenium	0.023		mg/L	0.0200	<	115	70-130			
Arsenic	0.021		mg/L	0.0200	<	105	70-130			
Cadmium	0.0024		mg/L	0.00200	<	120	70-130			
Matrix Spike Dup (B502642-MSD1)		**Source: 5020968-01**		*Prepared: 02/23/05*		*Analyzed: 02/25/05*				
Lead	0.021		mg/L	0.0200	<	105	70-130	4.88	25	
Selenium	0.022		mg/L	0.0200	0.00300	95.0	70-130	0.00	25	
Antimony	0.011		mg/L	0.0100	<	110	70-130	0.00	25	
Cadmium	0.0022		mg/L	0.00200	<	110	70-130	4.65	25	
Arsenic	0.022		mg/L	0.0200	0.00300	95.0	70-130	0.00	25	
Thallium	0.011		mg/L	0.0100	<	110	70-130	9.52	25	

Total Metals - Quality Control

Legend Technical Services of Arizona, Inc.

Analyte	Result	Reporting Limit	Units	Spike Level	Source Result	%REC	%REC Limits	RPD	RPD Limit	Notes
Batch B502647 - Default Prep Metals										
Matrix Spike (B502647-MS1)		**Source: 5020877-01**		*Prepared: 02/23/05 Analyzed: 03/01/05*						
Magnesium	28		mg/L	20.0	9.00	95.0	70-130			
Beryllium	0.198		mg/L	0.200	<	99.0	70-130			
Nickel	0.95		mg/L	1.00	<	95.0	75-125			
Sodium	92		mg/L	20.0	74.0	90.0	75-125			
Barium	0.97		mg/L	1.00	0.00500	96.5	70-130			
Calcium	30		mg/L	20.0	10.0	100	70-130			
Chromium	0.547		mg/L	0.500	0.0630	96.8	70-130			
Copper	0.92		mg/L	1.00	<	92.0	70-130			
Matrix Spike (B502647-MS2)		**Source: 5020877-06**		*Prepared & Analyzed: 02/23/05*						
Copper	0.95		mg/L	1.00	<	95.0	70-130			
Matrix Spike Dup (B502647-MSD1)		**Source: 5020877-01**		*Prepared & Analyzed: 02/23/05*						
Barium	0.97		mg/L	1.00	0.00500	96.5	70-130	0.00	25	
Nickel	0.96		mg/L	1.00	<	96.0	75-125	1.05	20	
Beryllium	0.200		mg/L	0.200	<	100	70-130	1.01	25	
Magnesium	28		mg/L	20.0	9.00	95.0	70-130	0.00	25	
Copper	0.93		mg/L	1.00	<	93.0	70-130	1.08	25	
Sodium	95		mg/L	20.0	74.0	105	75-125	3.21	20	
Chromium	0.554		mg/L	0.500	0.0630	98.2	70-130	1.27	25	
Calcium	30		mg/L	20.0	10.0	100	70-130	0.00	25	
Matrix Spike Dup (B502647-MSD2)		**Source: 5020877-06**		*Prepared & Analyzed: 02/23/05*						
Copper	0.94		mg/L	1.00	<	94.0	70-130	1.06	25	

Inorganic Chemistry - Quality Control

Legend Technical Services of Arizona, Inc.

Analyte	Result	Reporting Limit	Units	Spike Level	Source Result	%REC	%REC Limits	RPD	RPD Limit	Notes
Batch B502605 - Default Prep GenChem										
Blank (B502605-BLK1)				*Prepared & Analyzed: 02/22/05*						
Nitrate + Nitrite	<0.10	0.10	mg/L							
LCS (B502605-BS1)				*Prepared & Analyzed: 02/22/05*						
Nitrate + Nitrite	9.90	0.10	mg/L	10.0		99.0	80-120			
LCS Dup (B502605-BSD1)				*Prepared & Analyzed: 02/22/05*						
Nitrate + Nitrite	9.92	0.10	mg/L	10.0		99.2	80-120	0.202	25	
Matrix Spike (B502605-MS1)		**Source: 5020788-01**		*Prepared & Analyzed: 02/22/05*						
Nitrate + Nitrite	19.5	0.10	mg/L	10.0	12.5	70.0	80-120			M2
Matrix Spike (B502605-MS2)		**Source: 5020856-02**		*Prepared & Analyzed: 02/22/05*						
Nitrate + Nitrite	18.2	0.10	mg/L	10.0	11.2	70.0	80-120			M2
Matrix Spike Dup (B502605-MSD1)		**Source: 5020788-01**		*Prepared & Analyzed: 02/22/05*						
Nitrate + Nitrite	19.6	0.10	mg/L	10.0	12.5	71.0	80-120	1.42	25	M2
Matrix Spike Dup (B502605-MSD2)		**Source: 5020856-02**		*Prepared & Analyzed: 02/22/05*						
Nitrate + Nitrite	18.0	0.10	mg/L	10.0	11.2	68.0	80-120	2.90	25	M2
Batch B502645 - NO PREP										
Blank (B502645-BLK1)				*Prepared & Analyzed: 02/23/05*						
Total Alkalinity	<10	10	mg/L							
Blank (B502645-BLK2)				*Prepared & Analyzed: 02/23/05*						
Total Alkalinity	<10	10	mg/L							

Northern Arizona Pump Co. P.O. Box 252 Cornville, AZ 86325	Project: New Source Project Number: Mack Project Manager: Nathan White	Reported: 03/16/05 14:37

Inorganic Chemistry - Quality Control

Legend Technical Services of Arizona, Inc.

Analyte	Result	Reporting Limit	Units	Spike Level	Source Result	%REC	%REC Limits	RPD	RPD Limit	Notes
Batch B502676 - NO PREP										
Duplicate (B502676-DUP3)		**Source: 5021019-02**		*Prepared & Analyzed: 02/23/05*						
Total Dissolved Solids	796	1	mg/L		768			3.58	5	
Batch B502695 - NO PREP										
Blank (B502695-BLK1)				*Prepared: 02/24/05 Analyzed: 02/25/05*						
Cyanide, total	<0.0097	0.0097	mg/L							
Blank (B502695-BLK2)				*Prepared: 02/24/05 Analyzed: 02/25/05*						
Cyanide, total	<0.0097	0.0097	mg/L							
LCS (B502695-BS1)				*Prepared: 02/24/05 Analyzed: 02/25/05*						
Cyanide, total	0.0500	0.0097	mg/L	0.0500		100	80-120			
LCS Dup (B502695-BSD1)				*Prepared: 02/24/05 Analyzed: 02/25/05*						
Cyanide, total	0.0500	0.0097	mg/L	0.0500		100	80-120	0.00	25	
Matrix Spike (B502695-MS1)		**Source: 5020986-02**		*Prepared: 02/24/05 Analyzed: 02/25/05*						
Cyanide, total	0.0520	0.0097	mg/L	0.0500	<0.0097	104	80-120			
Matrix Spike (B502695-MS2)		**Source: 5021140-01**		*Prepared: 02/24/05 Analyzed: 02/25/05*						
Cyanide, total	0.0190	0.0097	mg/L	0.0500	<0.0097	38.0	80-120			M2
Matrix Spike Dup (B502695-MSD1)		**Source: 5020986-02**		*Prepared: 02/24/05 Analyzed: 02/25/05*						
Cyanide, total	0.0520	0.0097	mg/L	0.0500	<0.0097	104	80-120	0.00	25	
Matrix Spike Dup (B502695-MSD2)		**Source: 5021140-01**		*Prepared: 02/24/05 Analyzed: 02/25/05*						
Cyanide, total	0.0190	0.0097	mg/L	0.0500	<0.0097	38.0	80-120	0.00	25	M2

Northern Arizona Pump Co. P.O. Box 252 Cornville, AZ 86325	Project: New Source Project Number: Mack Project Manager: Nathan White	Reported: 03/16/05 14:37

Volatile Organic Compounds - Quality Control

Legend Technical Services of Arizona, Inc.

Analyte	Result	Reporting Limit	Units	Spike Level	Source Result	%REC	%REC Limits	RPD	RPD Limit	Notes
Batch B502618 - Default Prep VOC										
LCS (B502618-BS1)				*Prepared & Analyzed: 02/22/05*						
Chloromethane	0.0016	0.0005	mg/L	0.00200		80.0	70-130			
Vinyl chloride	0.0020	0.0005	mg/L	0.00200		100	70-130			
Bromomethane	0.0021	0.0005	mg/L	0.00200		105	70-130			
Chloroethane	0.0018	0.0005	mg/L	0.00200		90.0	70-130			
1,1-Dichloroethene	0.0019	0.0005	mg/L	0.00200		95.0	70-130			
Dichloromethane	0.0019	0.0005	mg/L	0.00200		95.0	70-130			
Methyl-tert-butyl ether	0.0017	0.0005	mg/L	0.00200		85.0	70-130			
trans-1,2-Dichloroethene	0.0019	0.0005	mg/L	0.00200		95.0	70-130			
1,1-Dichloroethane	0.0019	0.0005	mg/L	0.00200		95.0	70-130			
cis-1,2-Dichloroethylene	0.0018	0.0005	mg/L	0.00200		90.0	70-130			
2,2-Dichloropropane	0.0017	0.0005	mg/L	0.00200		85.0	70-130			
Chloroform	0.0019	0.0005	mg/L	0.00200		95.0	70-130			
1,1,1-Trichloroethane	0.0019	0.0005	mg/L	0.00200		95.0	70-130			
1,1-Dichloropropene	0.0018	0.0005	mg/L	0.00200		90.0	70-130			
Carbon tetrachloride	0.0018	0.0005	mg/L	0.00200		90.0	70-130			
1,2-Dichloroethane	0.0018	0.0005	mg/L	0.00200		90.0	70-130			
Benzene	0.0019	0.0005	mg/L	0.00200		95.0	70-130			
Trichloroethene	0.0018	0.0005	mg/L	0.00200		90.0	70-130			
-Dichloropropane	0.0018	0.0005	mg/L	0.00200		90.0	70-130			
Dibromomethane	0.0018	0.0005	mg/L	0.00200		90.0	70-130			
Bromodichloromethane	0.0018	0.0005	mg/L	0.00200		90.0	70-130			
cis-1,3-Dichloropropene	0.0017	0.0005	mg/L	0.00200		85.0	70-130			
Toluene	0.0018	0.0005	mg/L	0.00200		90.0	70-130			
trans-1,3-Dichloropropene	0.0017	0.0005	mg/L	0.00200		85.0	70-130			
1,1,2-Trichloroethane	0.0018	0.0005	mg/L	0.00200		90.0	70-130			
1,3-Dichloropropane	0.0018	0.0005	mg/L	0.00200		90.0	70-130			
Tetrachloroethene	0.0019	0.0005	mg/L	0.00200		95.0	70-130			
Dibromochloromethane	0.0017	0.0005	mg/L	0.00200		85.0	70-130			
Chlorobenzene	0.0019	0.0005	mg/L	0.00200		95.0	70-130			
1,1,1,2-Tetrachloroethane	0.0018	0.0005	mg/L	0.00200		90.0	70-130			
Ethylbenzene	0.0019	0.0005	mg/L	0.00200		95.0	70-130			
m,p-Xylene	0.0038	0.0010	mg/L	0.00400		95.0	70-130			
o-Xylene	0.0019	0.0005	mg/L	0.00200		95.0	70-130			
Styrene	0.0018	0.0005	mg/L	0.00200		90.0	70-130			
Bromoform	0.0018	0.0005	mg/L	0.00200		90.0	70-130			
1,1,2,2-Tetrachloroethane	0.0018	0.0005	mg/L	0.00200		90.0	70-130			
1,2,3-Trichloropropane	0.0019	0.0005	mg/L	0.00200		95.0	70-130			
Bromobenzene	0.0019	0.0005	mg/L	0.00200		95.0	70-130			
2-Chlorotoluene	0.0019	0.0005	mg/L	0.00200		95.0	70-130			
4-Chlorotoluene	0.0018	0.0005	mg/L	0.00200		90.0	70-130			
1,3-Dichlorobenzene	0.0019	0.0005	mg/L	0.00200		95.0	70-130			
1,4-Dichlorobenzene	0.0019	0.0005	mg/L	0.00200		95.0	70-130			
1,2-Dichlorobenzene	0.0019	0.0005	mg/L	0.00200		95.0	70-130			
1,2,4-Trichlorobenzene	0.0017	0.0005	mg/L	0.00200		85.0	70-130			
Xylenes (total)	0.0057	0.0015	mg/L	0.00600		95.0	70-130			
al THMs	0.0072	0.0020	mg/L	0.00800		90.0	70-130			

Inorganic Chemistry - Quality Control

Legend Technical Services of Arizona, Inc.

Analyte	Result	Reporting Limit	Units	Spike Level	Source Result	%REC	%REC Limits	RPD	RPD Limit	Notes
Batch B502464 - NO PREP										
Blank (B502464-BLK1)				*Prepared & Analyzed: 02/17/05*						
Nitrite as N	<0.10	0.10	mg/L							
LCS (B502464-BS1)				*Prepared & Analyzed: 02/17/05*						
Nitrite as N	0.12	0.10	mg/L	0.100		120	80-120			
LCS Dup (B502464-BSD1)				*Prepared & Analyzed: 02/17/05*						
Nitrite as N	0.12	0.10	mg/L	0.100		120	80-120	0.00	25	
Matrix Spike (B502464-MS1)		Source: 5020893-02		*Prepared & Analyzed: 02/17/05*						
Nitrite as N	1.02	0.10	mg/L	0.100	0.93	90.0	80-120			
Matrix Spike Dup (B502464-MSD1)		Source: 5020893-02		*Prepared & Analyzed: 02/17/05*						
Nitrite as N	1.04	0.10	mg/L	0.100	0.93	110	80-120	20.0	25	
Batch B502478 - NO PREP										
Blank (B502478-BLK1)				*Prepared & Analyzed: 02/18/05*						
Fluoride	<0.20	0.20	mg/L							
Blank (B502478-BLK2)				*Prepared & Analyzed: 02/18/05*						
Fluoride	<0.20	0.20	mg/L							
LCS (B502478-BS1)				*Prepared & Analyzed: 02/18/05*						
Fluoride	3.04	0.20	mg/L	3.00		101	80-120			
LCS Dup (B502478-BSD1)				*Prepared & Analyzed: 02/18/05*						
Fluoride	3.04	0.20	mg/L	3.00		101	80-120	0.00	25	

SEVERN TRENT STL

STL North Canton
4101 Shuffel Drive NW
North Canton, OH 44720

Tel: 330 497 9396 Fax: 330 497 0772
www.stl-inc.com

ANALYTICAL REPORT

PROJECT NO. 06-07-0195

06-07-0195

Lot #: A6G080184

Cindy Bentley

Aerotech AEL
4645 E. Cotton Center Blvd.
Building 3, Suite 189
Phoenix, AZ 85040

SEVERN TRENT LABORATORIES, INC.

Lois D. Ezzo for
Project Manager

July 13, 2006

QUALITY CONTROL ELEMENTS OF SW-846 METHODS

STL North Canton conducts a quality assurance/quality control (QA/QC) program designed to provide scientifically valid and legally defensible data. Toward this end, several types of quality control indicators are incorporated into the QA/QC program, which is described in detail in QA Policy, QA-003. These indicators are introduced into the sample testing process to provide a mechanism for the assessment of the analytical data.

QC BATCH

Environmental samples are taken through the testing process in groups called QUALITY CONTROL BATCHES (QC batches). A QC batch contains up to twenty environmental samples of a similar matrix (water, soil) that are processed using the same reagents and standards. STL North Canton requires that each environmental sample be associated with a QC batch.

Several quality control samples are included in each QC batch and are processed identically to the twenty environmental samples. These QC samples include a METHOD BLANK (MB), a LABORATORY CONTROL SAMPLE (LCS) and, where appropriate, a MATRIX SPIKE/MATRIX SPIKE DUPLICATE (MS/MSD) pair or a MATRIX SPIKE/SAMPLE DUPLICATE (MS/DU) pair. If there is insufficient sample to perform an MS/MSD or an MS/DU, then a LABORATORY CONTROL SAMPLE DUPLICATE (LCSD) is included in the QC batch.

LABORATORY CONTROL SAMPLE

The Laboratory Control Sample is a QC sample that is created by adding known concentrations of a full or partial set of target analytes to a matrix similar to that of the environmental samples in the QC batch. The LCS analyte recovery results are used to monitor the analytical process and provide evidence that the laboratory is performing the method within acceptable guidelines. All control analytes indicated by a bold type in the LCS must meet acceptance criteria. Failure to meet the established recovery guidelines requires the repreparation and reanalysis of all samples in the QC batch. The only exception is that if the LCS recoveries are biased high and the associated sample is ND (non-detected) for the parameter(s) of interest, the batch is acceptable.

At times, a Laboratory Control Sample Duplicate (LCSD) is also included in the QC batch. An LCSD is a QC sample that is created and handled identically to the LCS. Analyte recovery data from the LCSD is assessed in the same way as that of the LCS. The LCSD recoveries, together with the LCS recoveries, are used to determine the reproducibility (precision) of the analytical system. Precision data are expressed as relative percent differences (RPDs). If the RPD fails for an LCS/LCSD and yet the recoveries are within acceptance criteria, the batch is still acceptable.

METHOD BLANK

The Method Blank is a QC sample consisting of all the reagents used in analyzing the environmental samples contained in the QC batch. Method Blank results are used to determine if interference or contamination in the analytical system could lead to the reporting of false positive data or elevated analyte concentrations. All target analytes must be below the reporting limits (RL) or the associated sample(s) must be ND except under the following circumstances:

- Common organic contaminants may be present at concentrations up to 5 times the reporting limits. Common metals contaminants may be present at concentrations up to 2 times the reporting limit, or the reported blank concentration must be twenty fold less than the concentration reported in the associated environmental samples. (See common laboratory contaminants listed below.)
-

Volatile (GC or GC/MS)	Semivolatile (GC/MS)	Metals ICP-MS	Metals ICP Trace
Methylene Chloride, Acetone, 2-Butanone	Phthalate Esters	Copper, Iron, Zinc, Lead, Calcium, Magnesium, Potassium, Sodium, Barium, Chromium, Manganese	Copper, Iron, Zinc, Lead

EXECUTIVE SUMMARY - Detection Highlights

A6G080184

PARAMETER	RESULT	REPORTING LIMIT	UNITS	ANALYTICAL METHOD
MPE-1 07/07/06 13:50 001				
Arsenic (V)	60.1	16.0	ug/L	SW846 7063

SAMPLE SUMMARY

A6G080184

WO #	SAMPLE#	CLIENT SAMPLE ID	SAMPLED DATE	SAMP TIME
H8WA4	001	MPE-1	07/07/06	13:50

NOTE(S):

- The analytical results of the samples listed above are presented on the following pages.
- All calculations are performed before rounding to avoid round-off errors in calculated results.
- Results noted as "ND" were not detected at or above the stated limit.
- This report must not be reproduced, except in full, without the written approval of the laboratory.
- Results for the following parameters are never reported on a dry weight basis: color, corrosivity, density, flashpoint, ignitability, layers, odor, paint filter test, pH, porosity pressure, reactivity, redox potential, specific gravity, spot tests, solids, solubility, temperature, viscosity, and weight.

SEVERN TRENT STL

QUALITY CONTROL SECTION

LABORATORY CONTROL SAMPLE EVALUATION REPORT

General Chemistry

Lot-Sample #...: A6G080184 Matrix.....: WATER

PARAMETER	PERCENT RECOVERY	RECOVERY LIMITS	RPD	RPD LIMITS	METHOD	PREPARATION-ANALYSIS DATE	PREP BATCH #
Arsenic (III)		WO#:H8XH61AC-LCS/H8XH61AD-LCSD				LCS Lot-Sample#: A6G100000-412	
	101	(25 - 130)			SW846 7063	07/10/06	6191412
	114	(25 - 130)	12	(0-50)	SW846 7063	07/10/06	6191412

Dilution Factor: 1

NOTE(S):

Calculations are performed before rounding to avoid round-off errors in calculated results.

MATRIX SPIKE SAMPLE EVALUATION REPORT

General Chemistry

Client Lot #...: A6G080184 Matrix.....: WATER
Date Sampled...: 06/28/06 14:00 Date Received..: 07/06/06

PARAMETER	PERCENT RECOVERY	RECOVERY LIMITS	RPD	RPD LIMITS	METHOD	PREPARATION-ANALYSIS DATE	PREP BATCH #
Arsenic (III)		WO#: H8P5E1AD-MS/H8P5E1AE-MSD				MS Lot-Sample #: A6G060148-001	
	89	(25 - 130)			SW846 7063	07/10/06	6191412
	66	(25 - 130)	29	(0-50)	SW846 7063	07/10/06	6191412
		Dilution Factor: 1					
Arsenic (V)		WO#: H8P5E1AF-MS/H8P5E1AG-MSD				MS Lot-Sample #: A6G060148-001	
	113	(25 - 130)			SW846 7063	07/10/06	6191414
	102	(25 - 130)	4.1	(0-50)	SW846 7063	07/10/06	6191414
		Dilution Factor: 1					

NOTE(S):

Calculations are performed before rounding to avoid round-off errors in calculated results.

STL Cooler Receipt Form/Narrative **Lot Number:**_____
North Canton Facility

Client: Aquatech Project: #06-07-0195 Quote#:_____
Cooler Received on: 7-8-06 Opened on: 7-8-06 by: [signature] (Signature)
Fedx ☒ Client Drop Off ☐ UPS ☐ DHL ☐ FAS ☐ STL Courier ☐
Stetson ☐ US Cargo ☐ Other:_____
STL Cooler No#_____ Foam Box ☐ Client Cooler ☑ Other_____

1. Were custody seals on the outside of the cooler? Yes ☒ No ☐ Intact? Yes ☒ No ☐ NA ☐
   If YES, Quantity 1
   Were the custody seals signed and dated? Yes ☒ No ☐ NA ☐
2. Shipper's packing slip attached to this form? Yes ☒ No ☐ NA ☐
3. Did custody papers accompany the samples? Yes ☒ No ☐ Relinquished by client? Yes ☒ No ☐
4. Did you sign the custody papers in the appropriate place? Yes ☒ No ☐
5. Packing material used: Bubble Wrap ☐ Foam ☐ None ☐ Other:_____
6. Cooler temperature upon receipt 0.2 °C (see back of form for multiple coolers/temp)

METHOD: Temp Vial ☐ Coolant & Sample ☐ Against Bottles ☐ IR ☒ ICE/H_2O Slurry ☐
COOLANT: Wet Ice ☒ Blue Ice ☐ Dry Ice ☐ Water ☐ None ☐

7. Did all bottles arrive in good condition (Unbroken)? Yes ☒ No ☐
8. Could all bottle labels and/or tags be reconciled with the COC? Yes ☒ No ☐
9. Were samples at the correct pH? (record below/on back) Yes ☒ No ☐ NA ☐
10. Were correct bottles used for the tests indicated? Yes ☒ No ☐
11. Were air bubbles >6 mm in any VOA vials? Yes ☐ No ☐ NA ☒
12. Sufficient quantity received to perform indicated analyses? Yes ☒ No ☐
13. Was a Trip Blank present in the cooler? Yes ☐ No ☒ Were VOAs on the COC? Yes ☐ No ☒
14. Does the trip blank number match the cooler number in which it was received? Yes ☐ No ☐ NA ☒

Contacted PM _____ Date:_____ by:_____ via Voice Mail ☐ Verbal ☐ Other ☐
Concerning:

√	
	1. CHAIN OF CUSTODY
	The following discrepancies occurred:
	2. SAMPLE CONDITION
	Sample(s) _____ were received after the recommended holding time had expired.
	Sample(s) _____ were received in a broken container.
	3. SAMPLE PRESERVATION
	Sample(s) _____ were further preserved in sample receiving to meet recommended pH level(s). *Nitric Acid Lot # 122805-HNO3; Sulfuric Acid Lot # 100405-H2SO4; Sodium Hydroxide Lot # -100405 -NaOH; Hydrochloric Acid Lot # 100504-HCl; Sodium Hydroxide and Zinc Acetate Lot # 071604-CH3COO2ZN/NaOH*
	Sample(s) _____ were received with bubble > 6 mm in diameter (cc: PM)
	4. Other (see below or back)

Client ID	pH	Date	Initials
MPE-1	<2	7-8-06	NS

SEVERN TRENT STL

END OF REPORT

Aerotech Environmental, I Analytical Report Date: *18-Jul-06*

CLIENT:	Southwest Ground-Water Consultants, Inc.	**Client Sample ID:**	MPE-1
Lab Order:	06070196	**Tag Number:**	
Project:	Mingus Panarama Estates/B.1293	**Collection Date:**	7/7/2006 1:50:00 PM
Lab ID:	06070196-01A	**Matrix:**	DRINKING WATER

Analyses	Result	Limit	Qual	Units	DF	Date Analyzed
ICP METALS, DISSOLVED		**E200.7**				Analyst: **HK**
Iron, Dissolved	< 0.050	0.050		mg/L	1	7/10/2006
Magnesium, Dissolved	61	0.25		mg/L	1	7/10/2006
Manganese, Dissolved	< 0.010	0.010		mg/L	1	7/10/2006
Potassium, Dissolved	15	2.0		mg/L	1	7/10/2006
Silica (Silicon dioxide-SiO2)	15	0.21		mg/L	1	7/10/2006
Vanadium, Dissolved	< 0.010	0.010		mg/L	1	7/10/2006

Footnotes: All analysis performed at AEL Phoenix laboratory unless indicated by footnotes.
(1) AEL - Tucson Laboratory
(2) AEL - Knudsen Laboratory
(3) The holding time for pH analysis is immediate. For the most accurate result, the pH should be taken in the field within 15 minutes of sampling.

Aerotech Environmental, I — Analytical Report

Date: *18-Jul-06*

CLIENT:	Southwest Ground-Water Consultants, Inc.	**Client Sample ID:**	MPE-1
Lab Order:	06070196	**Tag Number:**	
Project:	Mingus Panarama Estates/B.1293	**Collection Date:**	7/7/2006 1:50:00 PM
Lab ID:	06070196-01C	**Matrix:**	DRINKING WATER

Analyses	Result	Limit	Qual	Units	DF	Date Analyzed
TOTAL PHOSPHATE (PHOSPHORUS)(PO4) AS P		**M4500-P B, E**				Analyst: **AC**
Phosphorus,Total - P	< 0.10	0.10		mg/L	1	7/13/2006

Footnotes: All analysis performed at AEL Phoenix laboratory unless indicated by footnotes.
(1) AEL - Tucson Laboratory
(2) AEL - Knudsen Laboratory
(3) The holding time for pH analysis is immediate. For the most accurate result, the pH should be taken in the field within 15 minutes of sampling.

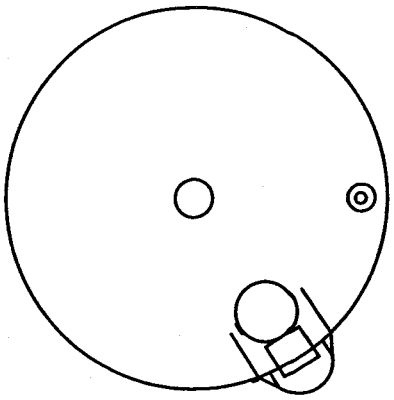

PLAN VIEW

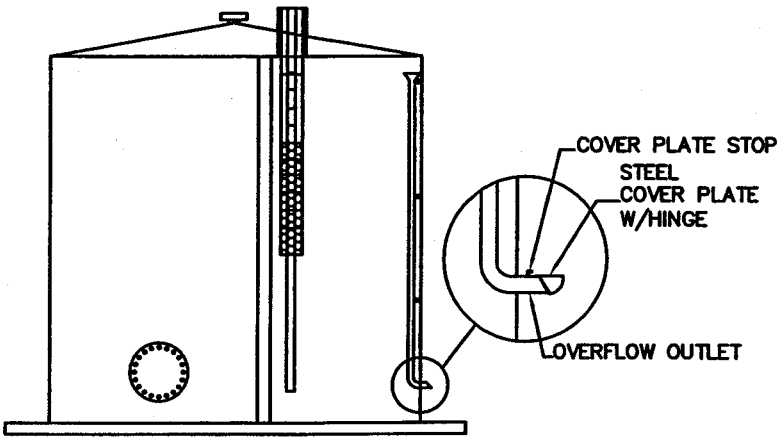

PROFILE VIEW

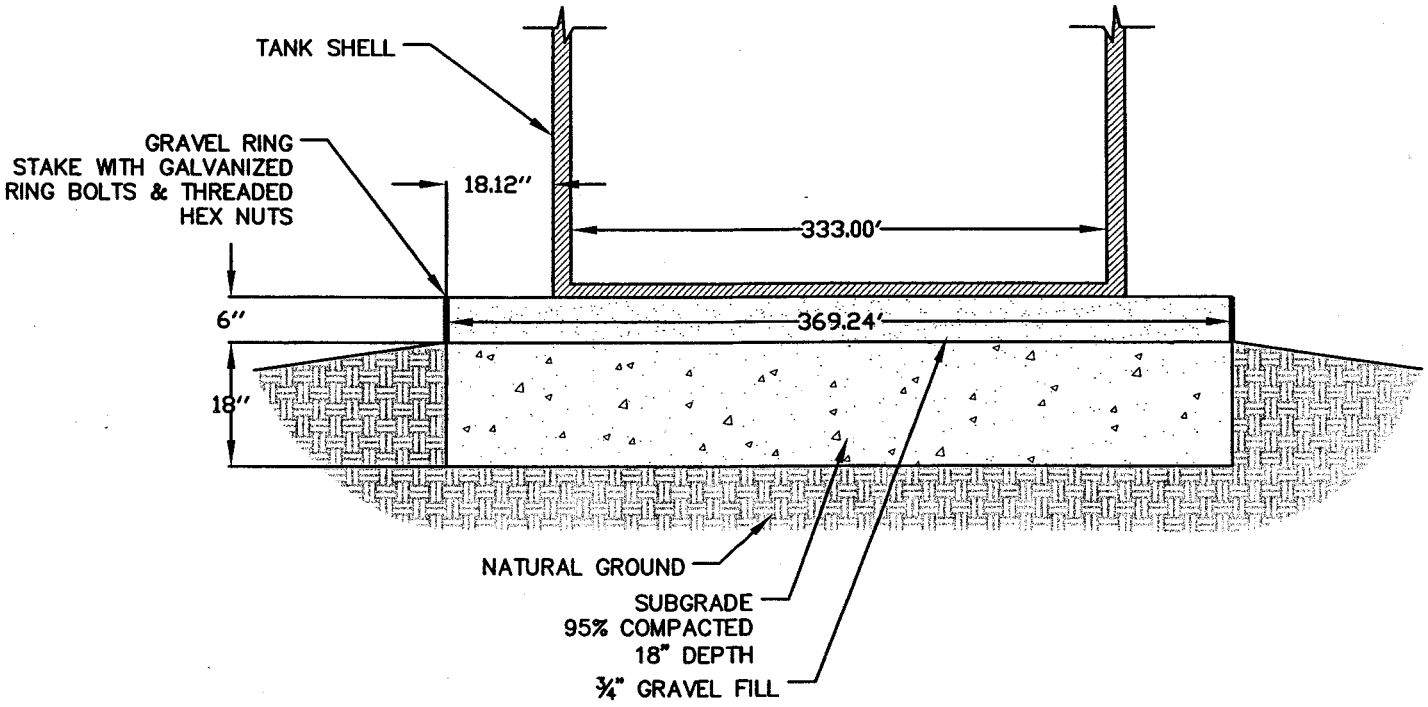

FOUNDATION DETAIL

NOT TO SCALE

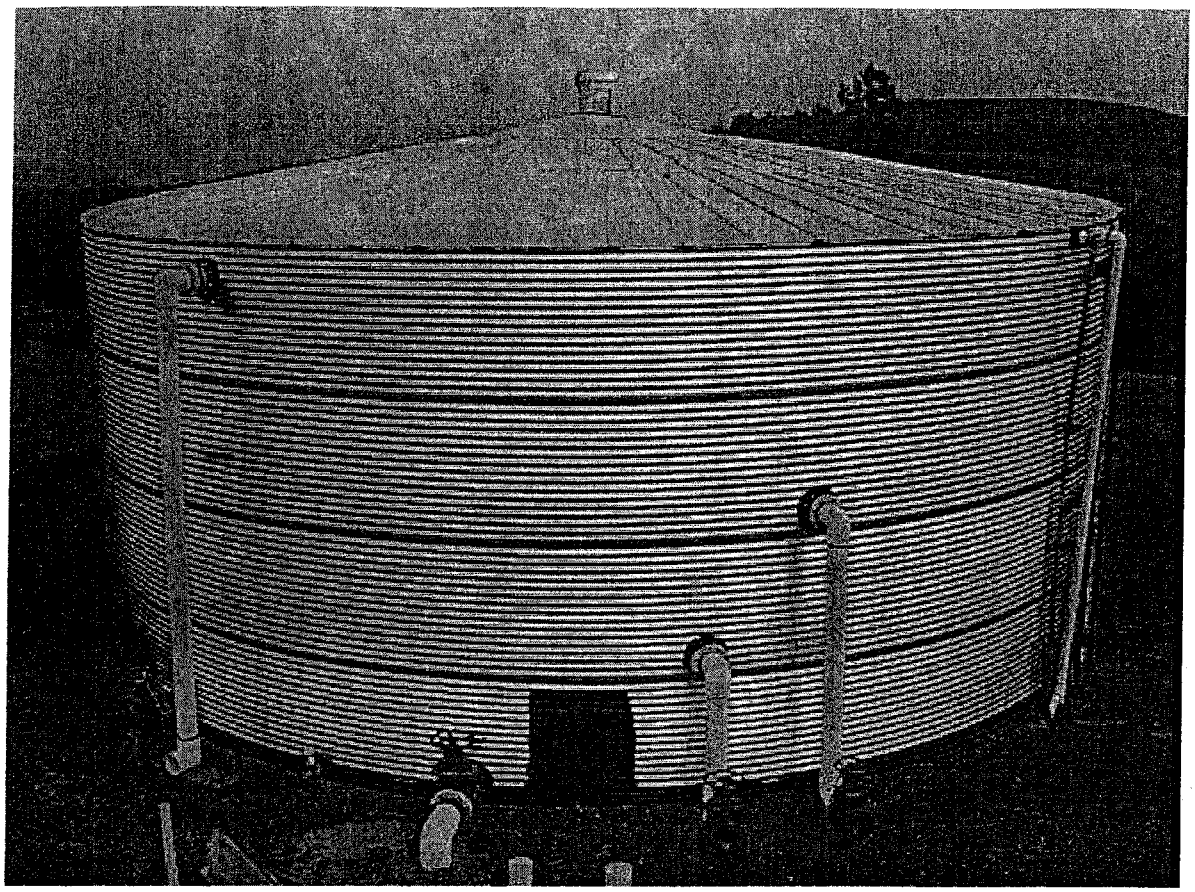

- Deck Supports and Live Loads per U.B.C.
- Prime Galvanized Steel per ASTM A527

Seam Sealant
- NSF Approved Urethane Polymer

Interior Tank Coating
- Farbertite is a Bituminous Ceramic Emulsion Coating a applied to the floor and side walls only. Interior roof coating available at additional charge. *(15 day minimum cure time required)*

Exterior Tank Coating (Optional)
- Acrylic Galvanized Steel Primer
- Acrylic Enamel Top Coat

Accessories Available
- Brass Female Threaded (NPT) Flanges
- 125# Cast Iron Companion Flanges
- 150# Steel Flanges
- Liquid Level Indicators
- Ladders
- Side Shell Manways
- Vents
- Gravel Rings
- Seismic Anchors

SPECIFICATIONS:

MATERIALS:	G-90 Prime Hot dipped galvanized carbon steel (1.25 oz. zinc/sq. ft.) ASTM A-527 Corrugations-2/3" pitch (o.c.) by 2/3" depth. Solid steel galvanized Tinners rivets (3/16" - 1/4" o.d.) ASTM-A525
RIVETS:	EPA accepted, FDA approved Urethane Polymer
SEALANTS:	Interior and Exterior bottom - Ceramic bitumastic butylene emulsion (standard) Exterior seams- - Aluminum based paint. Other coating systems available.
COATINGS:	Joint design per A.I.S.C. Tanks over 5,000 gallons may be seismically designed per section 12 of AWWA D-103-87 or 1991 UBC chapter 23.
ENGINEERING:	Depending on size and job location, certain tanks may require anchoring to concrete foundations. Tanks under 5,000 gallons are exempt from UBC regulations.

ACCESS:

STANDARD:	Published tank prices assume tank site is accessible by standard flat-bed truck or 4-Wheel drive pick-up and flat-bed trailer.
DIFFICULT:	Additional charges may be required for hand carrying of materials and equipment if vehicle access is not permissible.

DELIVERY:

1. Water should be changed with fresh water about every three to six months. It is preferable that water be circulated as often as possible. Use water for irrigation, cleaning or other uses, then replenish tank supply with fresh water.
2. If your tank is equipped with an automatic fill shut-off float valve, periodically check the adjustment of the float arm attached to the float ball to prevent over flow.
3. If the water supply contains "hard" or corrosive minerals, tank interior may require periodic cleaning and recoating. Inspect tank interior and exterior coatings annually, clean and re-coat if needed. Consult with your local factory representative for additional recommendations if necessary. Under normal water conditions, tank coatings should last the life of the thank (typically 25 years).

To Clean Tank- Wash walls with water and use soft bristle brush to remove rust and mineral deposits. Rinse with water and dry. Leave the top of the tank off.
To Recoat Tank- Once tank is cleaned and dried, recoat using a large brush. If it's a warm day it could take as little as 48 hours to dry. Leave the top of the tank off.

Warranty Statement

- Manufacturer shall warrant its corrugated galvanized steel water storage tanks against defects in workmanship or materials that cause either leakage for a period of ten (10) years from the original date of installation when properly installed and maintained for use with potable water. The warranties on equipment or accessories furnished with the tank are limited to the respective manufacturer's warranties for their products.
- All obligations and liabilities under this warranty are limited to repairing or replacing--at manufacturer's option--the tank at its original installation site. Repairs or replacements are made subject to field inspection by a factory representative and customer compliance with installation and maintenance guidelines. Replacement products may be subject to normal freight, handling and installation charges.
- Requests for service under this warranty shall be made by contacting the manufacturer in writing as soon as possible after the discovery of any alleged defect.
- Installation of temporary storage facilities if needed, during the course of repairs or replacement, is not included and shall be the responsibility of the user.
- An extended warranty is available, on a pro ratio basis, for all replacement tanks. The formula is as follows: A credit of 10% per year remaining on the original tank warranty shall be discounted from the current list price. The user may use this credit toward the purchase of any like or larger tank.
- This warranty does not apply to any tank that has been subjected to negligence, alteration, vandalism, civil disturbances, or acts of God. Manufacturer does not authorize other persons to extend any warranty with respect to its products, nor assume any liability for unauthorized warranties.
- This warranty supersedes any warranty not dated or bearing an earlier date.
- Expressly excluded from this warranty are defects caused by electrolytic or bacterial conditions, misuse, abuse, or improper installation, application, employment, or operation of the tank. Damage caused by unauthorized repair is not covered by this warranty.
- No liability for consequential damages will be accepted. Manufacturer will not assume responsibility for contingent liability for alleged failure of its products.

Memo

To: **CC:**

From: **DATE:**

ATC Corrugated Galvanized Steel Potable Water Tanks are lined on the inside with *Farbertite* coating.

We apply NSF Approved Polyurethane to our galvanized tanks for the following reasons:

1. **Adhesion - NSF Approved Polyurethane** forms a water tight, molecular bond to galvanize without sandblasting. Sandblasting galvanized steel would remove the factory applied zinc coating, removing a valuable Secondary defense against corrosion.
2. **Application - NSF Approved Polyurethane** is factory applied to all submerged surfaces in strict conformance with the coating manufacturer`s recommended procedures. Field touch up can be easily performed without imposing health or environmental risks associated with field applied epoxy coatings.
3. **Acceptance - NSF Approved Polyurethane** is accepted by regulatory agencies for use in water systems including schools, hotels, restaurants, campgrounds and water districts.

The following is a list of recently installed *Corrugated Galvanized Water Storage Tanks**:

CLIENT	LOCATION	CAPACITY
Mendocino Middle School	Mendocino, CA	60,000 Gal.
USDA Forest Service	Bass Lake Camp, CA	20,800 Gal.
Table Mountain Rancheria	Friant, CA	67,900 Gal.
Santa Clara Parks and Rec.	Morgan Hill, CA	10,000 Gal.
Cedar Smoke School	Truckee, CA	101,350 Gal
Catholic Youth Organization	Occidental, CA	101,350 Gal.
USDA Forest Service	Oakhurst, CA	10,000 Gal.
Hidden Valley Foodmart	Middletown, CA	31,000 Gal.
Silver Oak Cellars	Geyserville, CA	30,500 Gal.
MCI Telecommunications	Hayward, CA	22,750 Gal.
Thompson Orchard	Hood River, CA	31,000 Gal.
Mission Springs Conference Center	Scotts Valley, CA	67,900 Gal.
Agri-Cell, Inc.	Delano, CA	15,000 Gal.
Agri-Cell, Inc.	Delano, CA	10,000 Gal.
Bennett Ridge Mutual Water Company	Santa Rosa, CA	51,000 Gal.
Grass Valley Assembly of God	Grass Valley, CA	2 - 12,000 Gal.
Diamond Arrow Conference Center	Nevada City, CA	67,900 Gal.
Sequoia Construction	Whitehorn, CA	10,000 Gal.
Medite Corporation	Medford, CA	10,650 Gal.
Kendall Jackson Winery	Geyserville, CA	12,000 Gal.
Verde River R.R. Depot	Clarksdale, CA	10,000 Gal.
Eagle Ridge Subdivision	Show Low, CA	53,500 Gal.
City of Depoe Bay	Depoe Bay, CA	10,000 Gal.

Exhibit 2

HYDROLOGIC STUDY

Mingus Panorama Estates
Yavapai County, Arizona

Prepared for:

SEC, Inc.
20 Stutz Bearcat Drive, Suite #6
Sedona, Arizona 86336

Prepared by:

Southwest Ground-water Consultants, Inc.
227 North Cortez
Prescott, Arizona 86301

August 3, 2006

REGISTERED GEOLOGIST
CERTIFICATE NO.
41781
CHRIS R.
CATALANO
Date Signed 8/3/06
ARIZONA U.S.A.

TABLE OF CONTENTS

	Page No.
TABLE OF CONTENTS	**i**
LIST OF FIGURES	**ii**
LIST OF APPENDICES	**iii**
1.0 INTRODUCTION	**1**
2.0 WATER DEMAND	**2**
2.1 Introduction	2
2.2 Residential Demand	2
2.3 Non-Residential Demand	2
3.0 WATER SUPPLY	**3**
3.1 Geologic Setting	3
3.2 Hydrology	3
3.3 Aquifer Characteristics	5
3.4 Ground-water Quality	5
4.0 IMPACT OF PROPOSED DEMAND ON SUPPLY	**6**
5.0 CONCLUSIONS	**7**
6.0 REFERENCES	**8**
FIGURES	**9**
APPENDICES	**16**

REGISTERED GEOLOGIST
CERTIFICATE NO.
41781
CHRIS R.
CATALANO
Date Signed 8/31/06
ARIZONA, U.S.A.

LIST OF FIGURES

FIGURE NO.	DESCRIPTION	PAGE NO.
	Vicinity Map	10
	Geology Map	11
	Geologic Cross section	12
	ADWR Well Location Map	13
	2004 Water Level Map	14
	Historic Water Levels	15

LIST OF APPENDICES

APPENDIX NO.	DESCRIPTION	PAGE NO.
	ADWR Well Registry	A-1
	Well Driller Reports	B-1
	Aquifer Test Results	C-1
	Water Quality Results	D-1

1.0 INTRODUCTION

The following hydrologic study has been prepared by Southwest Ground-water Consultants, Inc. (SGC) for the proposed Mingus Panorama Estates subdivision in Cornville, Yavapai County, Arizona. The proposed project is a single-family residential subdivision consisting of 69 single-family residential lots on approximately 80 acres. The project is located in a portion of the southeast quarter of Section 35, Township 16 North, Range 4 East, of the Gila and Salt River Base and Meridian (Figure 1).

Mingus Panorama Estates proposes to provide water to the new subdivision through a central distribution system. The purpose of the hydrologic study is to estimate the effect that the projected water demand for the Mingus Panorama Estates will have on the available water resources. In addition, SGC will use available data to determine if these resources could satisfy the estimated projected demand of the subdivision.

This report has been organized into six sections. Section 2.0 consists of a discussion of the estimated water demands of the proposed project. A hydrogeologic review of the regions water supply is presented in Section 3.0. The impact of ground-water development on the underlying aquifer is presented in Section 4.0. Conclusions are presented in 5.0. References cited throughout this report are listed in Section 6.0.

2.0 WATER DEMAND

2.1 INTRODUCTION

SGC estimated the demand for the Mingus Panorama Estates subdivision based on the residential water demand estimates published in the ADWR Prescott Active Management Area Third Management Plan. The unit demand was calculated based on the interior use and exterior use for 69 single-family dwellings with an exterior demand based on a maximum of 10,000 ft^2 of irrigated land around each home. The area outside the 10,000 ft^2 will remain native vegetation. A copy of the Covenants, Conditions, and Restrictions will be submitted with the application for a Water Adequacy Report that states the irrigation restrictions for the subdivision.

Water will be supplied to the proposed subdivision through a central distribution system. The water provider has not been created as of yet. One water production well exists on site. The aquifer penetrated by the production well was tested for yield and water quality prior to completing this report.

2.2 RESIDENTIAL DEMAND

Based on 2000 U.S. Census data, the average number of persons per household is 2.33 in Yavapai County. The per capita interior water demand used for the following calculation is 57 gallons per capita per day (gpcd). Hence, SGC has calculated the interior water demand for Mingus Panorama Estates to be approximately 10.27 acre feet per year (ac-ft/yr). The exterior water demand as stated in the ADWR Prescott Active Management Area Third Management Plan is 75 gallons per day per dwelling. Therefore, SGC has estimated the exterior demand for Mingus Panorama Estates to be 5.80 ac-ft/yr. The total estimated residential demand for Mingus Panorama Estates is 16.07 ac-ft/yr.

2.3 NON-RESIDENTIAL DEMAND

Based on review of the Final Plat for Mingus Panorama Estates, there will be approximately 2.26 acres of open space. The open space will include Tract W (well site), Tract A (0.30 ac), and two detention ponds. Tract W will include the well, water storage facility, and water treatment facility. There will not be any vegetation that requires irrigation on Tract W. Tract A will remain native vegetation and not require any irrigation. The two detention ponds total approximately 1.1 acres and will detain runoff during storm events. The detention ponds will not require any irrigation.

Based on the Prescott Active Management Area Third Management Plan, construction demand is 10,000 gallons per lot. Applying this demand to the 69 residential lots, SGC estimates the construction demand to be approximately 0.02 ac-ft/yr.

System losses in the water distribution system are estimated at 10%, or 1.61 ac-ft/yr. Therefore, the total annual ground-water demand for Mingus Panorama Estates is estimated to be 17.70 ac-ft/yr or 10.98 gallons per minute (gpm).

3.0 WATER SUPPLY

3.1 GEOLOGIC SETTING

The study area is located in the Upper Verde River basin, which occupies the boundary between the Colorado Plateau and the Central highlands physiographic provinces of Arizona. The geology of the vicinity is characteristic of the Colorado Plateau, consisting of regionally extensive, shallow dipping Paleozoic strata. However, the local geology is influenced by House Mountain, a Tertiary volcanic extrusion. House Mountain consists of a series of basalt flows that radiate from the origin. To the south and east, the basalt flows interfinger with the Tertiary Verde Formation. The Tertiary rocks are found lying uncomformably on older rock units. In the study area, the Mississippian Redwall Limestone is expected to lay beneath the Tertiary units. The lithology of the primary water producing units in the study area, the Verde Formation and the Redwall Limestone, are presented below. The basalt of House Mountain is not considered a primary water producing unit and is not discussed below. A geologic map showing the rock formations that are exposed at the ground surface is presented in Figure 2. A cross section that runs south-north through the property is presented in Figure 3.

The shallowest rock unit of the regional aquifer beneath the proposed Mingus Panorama Estates subdivision is the Tertiary Verde Formation. This formation consists of a sequence of limestone, sandstone, and mudstone facies. The thickness of the unit in the study area is estimated to be 500 feet to greater than 700 feet. The thickness of the Verde Formation ranges from 0 feet thick at its margins, and has been estimated to be as much as 1,800 feet to 2,200 feet thick in the middle of the basin (Twenter and Metzger, 1963). Water producing facies of the Verde Formation are typically the limestone. Water producing zones are, at times, isolated from one another by confining layers. These confining layers can create artesian conditions within the aquifer.

The Mississippian Redwall Limestone lies beneath the Verde Formation in the study area. It unconformably overlies the Devonian Martin Formation, and is primarily a massive, coarse-grained, crystalline limestone. The thickness of the unit in the study area is unknown due to the lack of wells drilled to sufficient depth. However, the thickness generally ranges from 0 feet to 300 feet in the region. Bed thickness ranges from thinly bedded in the lower one-third, to thickly bedded in the upper two-thirds. Some beds are highly fractured and contain solution channels and caverns that have formed along joints, bedding planes, or at random (Owen-Joyce and Bell, 1983).

3.2 HYDROLOGY

Locations of registered wells from the ADWR well registry database are presented on Figure 4. Non-exempt wells have been identified with a map identification number for reference. A copy of the ADWR Well Registry for all registered wells is presented in Appendix A. Well Driller Reports for selected wells located along the geologic cross section are presented in Appendix B. Most wells in the area are completed in the Verde Formation. In the vicinity, the Verde

Formation is the shallowest water bearing formation of the regional aquifer. Ground water in the Verde Formation is typically under artesian pressure. The potentiometric surface of the ground water for wells completed only in the Verde Formation has been measured from 50 to 225 feet in the vicinity.

There are several wells in the vicinity of Mingus Panorama Estates that penetrate the underlying Paleozoic formations. There are sufficient data available to conclude that the Paleozoic formations beneath Mingus Panorama Estates and the vicinity yield large volumes of ground water. In addition, the data also suggests that the primary water producing Paleozoic formation beneath the vicinity is the Redwall Limestone. The Redwall Limestone is under artesian pressure in the vicinity. Potentiometric surface of the ground water for wells completed in the Redwall Limestone has been measured from 0 ft-bgs to 98 ft-bgs. However, the top of the Redwall Limestone ranges from approximately 300 ft-bgs to greater than 660 ft-bgs in the vicinity. There are at least three wells in the area that have documented logs supporting the fact that large volumes of water have been encountered in the underlying Paleozoic formations. These wells are labeled as wells 139, 142, and 151 in Figure 4. SGC was involved with the drilling, installation, and testing of Well 139. This well penetrates the Supai formation at 290 ft-bgs. Well 139 is located on the flanks of House Mountain and it is suspected that there are only remnants of the Supai Formation present. The majority of the ground water at Well 139 is most likely derived from the Redwall Limestone. Well 142 was drilled in 1982 and observed and documented by a consultant. Review of the Driller's Log for Well 142 indicates that the Redwall Limestone was encountered at 660 ft-bgs. SGC was involved with the drilling, installation, and testing of Well 151. Well 151 encountered the Redwall Limestone at 650 ft-bgs.

Review of the Drillers Log for the existing on site well (162) at the Mingus Panorama Estates indicates that the well was drilled and completed in basalt. However, knowledge of the underlying geology in the vicinity leads SGC to believe that the basalt is generally a confining unit. Hence, the water from the on site well is probably derived from the underlying Redwall Limestone.

Generally, the direction of ground-water flow in the vicinity of the proposed Mingus Panorama Estates subdivision is to the southwest (Figure 5). Formation contacts and faults can act as impediments or conduits to flow, causing local deviations to the direction of flow. Recharge to the regional aquifer system occurs on the flanks of Mingus Mountain and in the plateau highlands where the precipitation and aquifer permeability are greatest. The aquifer system discharges to springs and streams near the valley floor, and wells throughout the region (Owen-Joyce and Bell, 1983).

Ground-water elevation across the proposed Mingus Panorama Estates subdivision is approximately 3,400 feet above mean sea level (ft msl) (Figure 5). The aquifer penetrated by the Mingus Panorama Estates well is under artesian pressure. Hence, the potentiometric ground-water surface beneath the Mingus Panorama Estates ranges from approximately 60 ft-bgs to 120 ft-bgs.

Historically, ground-water levels in the area have declined. The ADWR GWSI database was queried for historic water level data. Historic water level data for several nearby wells are presented in Figure 6. Well A(15-4)4DDC1 has the most recorded water level data and was used to estimate the historic water level trends for the area. The water level in well A(15-4)4DDC1 was measured frequently between 1959 and 2004. Over that time, the depth to water has decreased 23 feet; from 37 ft-bgs to 60 ft-bgs. The overall trend is a decrease of approximately 0.51 feet per year. Hydrographs showing the historic water level measurements for wells in the area are presented in Figure 6.

3.3 AQUIFER CHARACTERISTICS

SGC performed an aquifer test on the existing Mingus Panorama Estates well (Well 162) in July, 2006 (Figure 4). Well 162 was pumped at approximately 150 gallons per minute for 24 continuous hours. Maximum drawdown in the well was measured at approximately 2 feet after 1,340 minutes of pumping. Based on the data collected during the aquifer test, SGC calculated a transmissivity of the aquifer penetrated by Well 162 to be approximately 23,000,000 gpd/ft. Data collected during the aquifer test has been attached in Appendix C for your review. SGC was involved in the drilling and testing of Well 139 and Well 163. SGC conducted an aquifer test on Well 139 in June, 2005. Well 139 was pumped at a constant rate of 580 gallons per minute for 11 continuous hours. Maximum drawdown was measured at approximately 12.50 feet. Based on the data collected during the aquifer test, SGC calculated an aquifer transmissivity of 490,000 gpd/ft. SGC did not perform an aquifer test on Well 163. However, upon completion, water discharging at the surface due to artesian pressure was measured to be greater than 1,500 gpm. An aquifer test was performed on Well 142 by a consultant in 1982. Based on review of the Completion Report, Well 142 was tested at 252 gpm with less than 15 feet of drawdown.

SGC will use an aquifer transmissivity value of 490,000 gpd/ft for the aquifer impact calculations in this report. This value will be used because it is the most conservative of the verified values for the underlying aquifer that has been penetrated by the on-site well.

3.4 GROUND-WATER QUALITY

Northern Arizona Pump Company collected a water quality sample from the on site well on February, 16, 2005. The sample was tested for contaminants consistent with ADEQ's requirements for a new drinking water source. Based on review of the water quality test results, ground water from the aquifer penetrated by the on-site well (Well 162) exceeds the Maximum Contaminant Level for Arsenic. The measured arsenic concentration in the sampled water was 0.070 mg/L. The developer is aware of this contamination and is in the process of choosing an Arsenic treatment technique. In addition, Lead was measured at 0.007 mg/L, which is above the reporting level for the associate contaminant. Besides the aforementioned contaminants, the ground water from the aquifer penetrated by the on site well meets all EPA drinking water quality standards. The results of the water quality analyses are presented in Appendix D of the Application for an Analysis of Water Adequacy.

4.0 IMPACT OF PROPOSED DEMAND ON SUPPLY

As previously reported in Section 2.2, the estimated water demand for the proposed Mingus Panorama Estates subdivision is 10.98 gpm (11 gpm, rounded). SGC will assume that all of the ground-water demand will be pumped from a single well. The impact on the regional aquifer from pumping the projected average water demand has been calculated by applying the Theis non-equilibrium method (1935) as presented below.

Where: $s = [114.6\ (Q)\ W(u) / T]$ (1)

$u = 1.87\ r^2\ S / Tt$ (2)

Given:

- s = drawdown at the production well at radius r (feet).
- Q = constant discharge from the production well (11 gpm).
- T = transmissivity of the regional aquifer (490,000 gpd/ft).
- $W(u)$ = well function.
- u = $1.87\ r^2\ S / Tt$
- r = radius from the production well of calculated s at time t (0.33 ft).
- S = Coefficient of storage (0.0001 dimensionless, estimated based on aquifer material and well yield)
- t = time since pumping started (36500 days, 100 years).

Substituting: $u = 1.87\ (0.33ft)^2\ (0.0001) / (490{,}000\ gpd/ft)\ (36500\ d)$

$u = 1.14 \times 10^{-14}$

Therefore: $W(u) = 31.0$ (from well function tables)

and: $s = [114.6\ (11\ gpm)\ (31.0) / 490{,}000\ gpd/ft]$

$s = 0.09$ feet

The maximum drawdown after 100 years of pumping was calculated using the Theis non-equilibrium equation (Theis, 1935). The drawdown was calculated at a radius of 4 inches (0.33 feet) from the center of the well. The resulting maximum drawdown after 100 years of pumping was calculated to be 0.08 feet.

The estimated depth to water after 100 years of pumping was calculated by adding the measured depth to water beneath the proposed Mingus Panorama Estates subdivision, the drawdown that was calculated based on the estimated demand for the proposed Mingus Panorama Estates subdivision, and the simulated water level decline trend (0.51 ft/yr). The 100-year depth to water calculation is shown below.

Static Water Level (Mingus Panorama Estates Well)	102.58	feet
100-Year Ground-water Decline @ -0.51 ft/yr	51	feet
Mingus Panorama Estates Demand*	1	feet
Mingus Panorama Estates 100-Year Depth to Water	**154.58**	**feet**

* An aquifer impact of 1 foot was used in the calculation although the calculated impact was 0.08 feet.

5.0 CONCLUSIONS

Southwest Ground-water Consultants, Inc. has completed this hydrologic study in support of the Analysis of Water Adequacy for the proposed Mingus Panorama Estates subdivision in Cornville, Arizona. Based on this study, SGC has made the following conclusions.

1. The Redwall Limestone is the primary water bearing formation beneath the proposed Mingus Panorama Estates subdivision. The Redwall Limestone is part of the regional aquifer system.

2. Water level elevation across the proposed subdivision is approximately 3,400 ft-amsl. Depth to the water producing strata beneath the site is approximately 100 ft- bgs.

3. Mingus Panorama Estates proposes to provide water through a central distribution system

4. Based on recent water quality analyses, the Arsenic level in the ground water from the on site well exceeds the Maximum Contaminant Level. Prior to applying for the Water Adequacy Report, the developer will choose an Arsenic treatment technique. Other than Arsenic, the water quality from the on site well meets all EPA drinking water standards.

5. The 100-year depth to static water will not exceed 1,200 ft-bgs.

6.0 REFERENCES

ADWR. 1999. Arizona Department of Water Resources, Basic Data Branch and Operations.

Owen-Joyce, S.J., and C.K. Bell, 1983. Appraisal of Water Resources in the Upper Verde River Area, Yavapai and Coconino Counties, Arizona. Arizona Department of Water Resources Bulletin 2, 819 p.

Twenter, F.R., and D.G. Metzger, 1963. Geology and Ground Water in Verde Valley-The Mogollon Rim Region, Arizona. U.S. Geological Survey Bulletin 1177, 132 p.

FIGURES

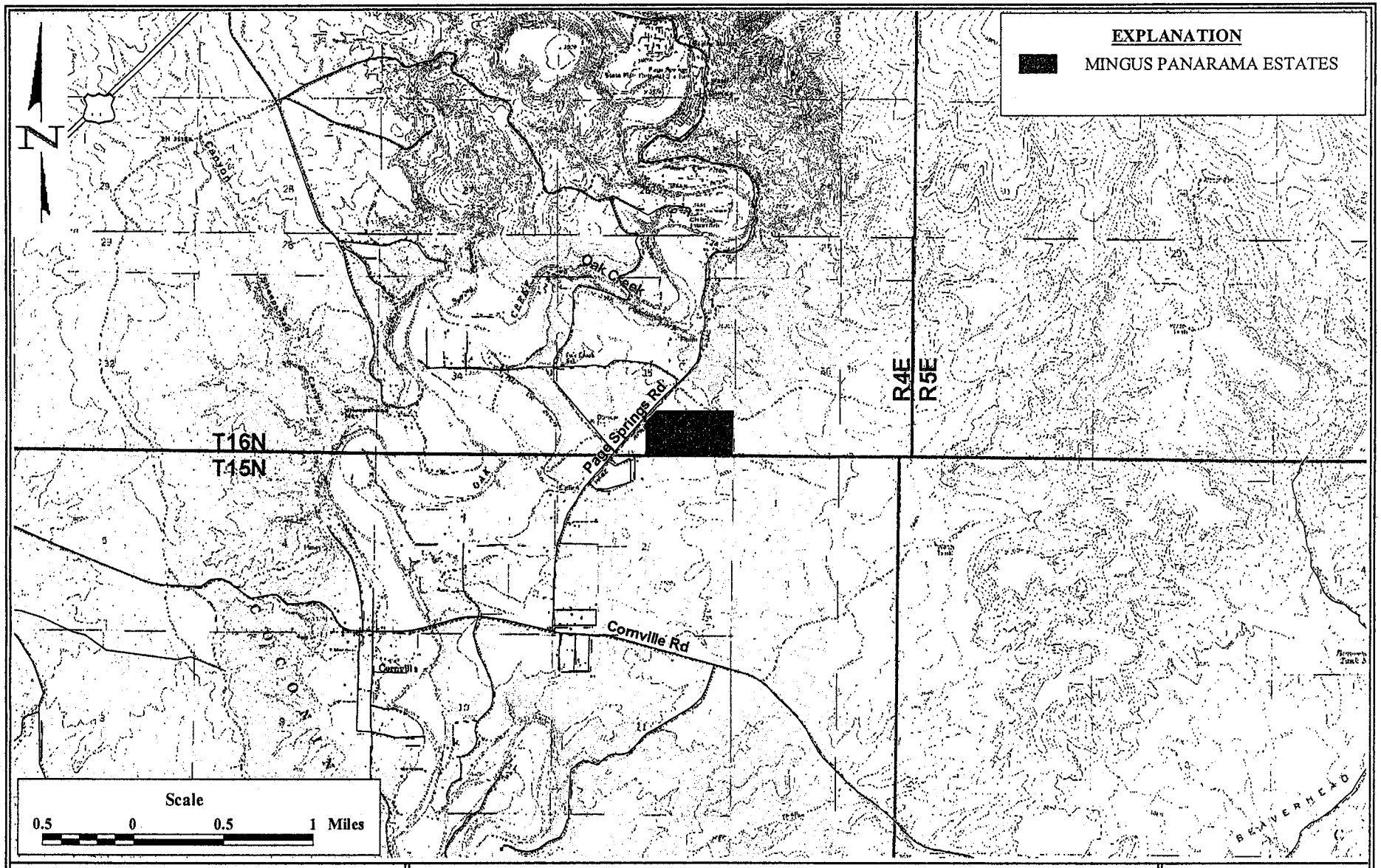

Southwest Ground-water Consultants, Inc.

August 3, 2006 **Project B.1293**

VICINITY MAP

Mingus Panorama Estates, Yavapai County, Arizona

Figure 1

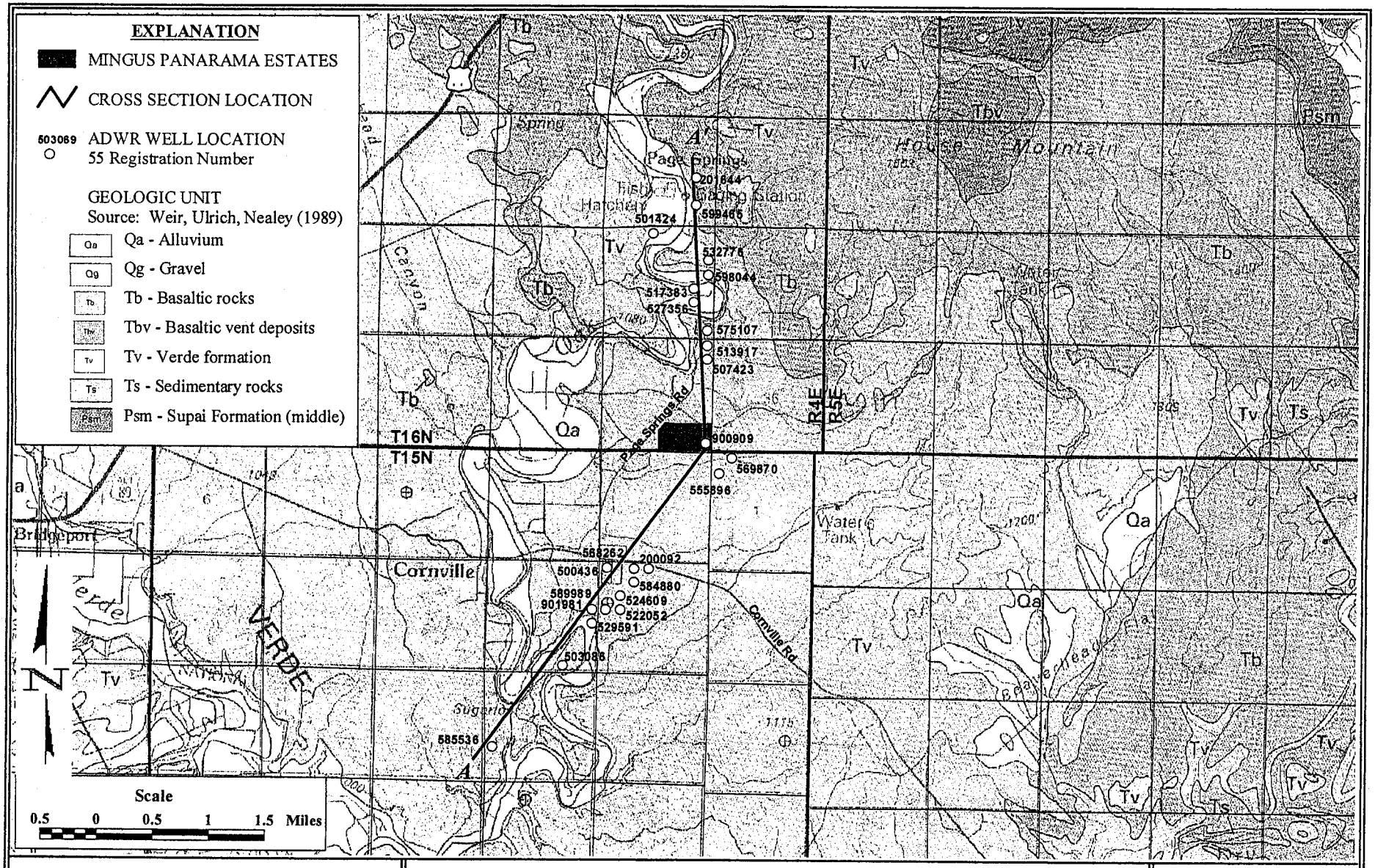

Southwest Ground-water Consultants, Inc.

August 3, 2006 Project B.1293

GEOLOGY MAP

Mingus Panorama Estates, Yavapai County, Arizona

Figure 2

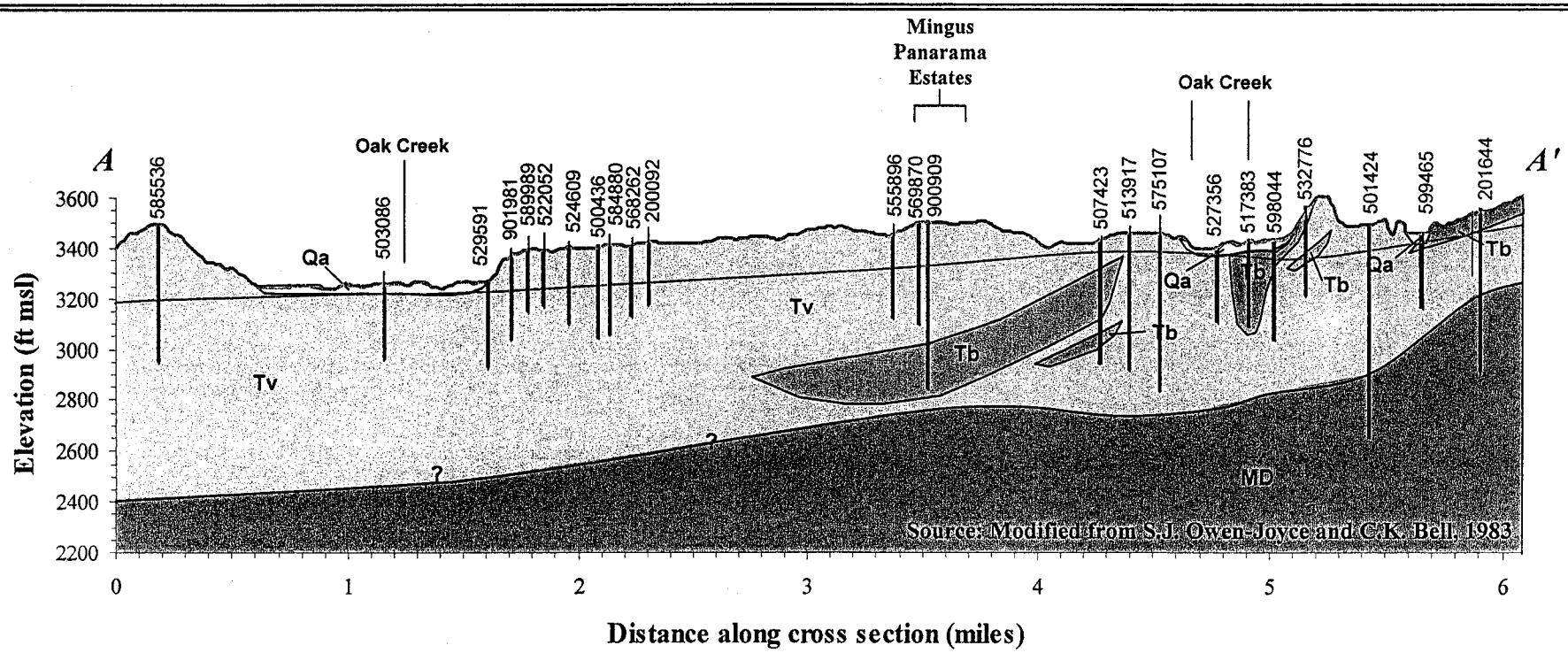

EXPLANATION

- Qa – Alluvium
- Tb – Basaltic Rocks
- Tv – Verde Deposits
- MD – Redwall and Martin Formations
- Water Elevation
- 510168 — Selected Well Location ADWR 55- Well Registration

Southwest Ground-water Consultants, Inc. August 3, 2006 Project B.1293	**GEOLOGIC CROSS SECTION** Mingus Panorama Estates, Yavapai County, Arizona	**Figure 3**

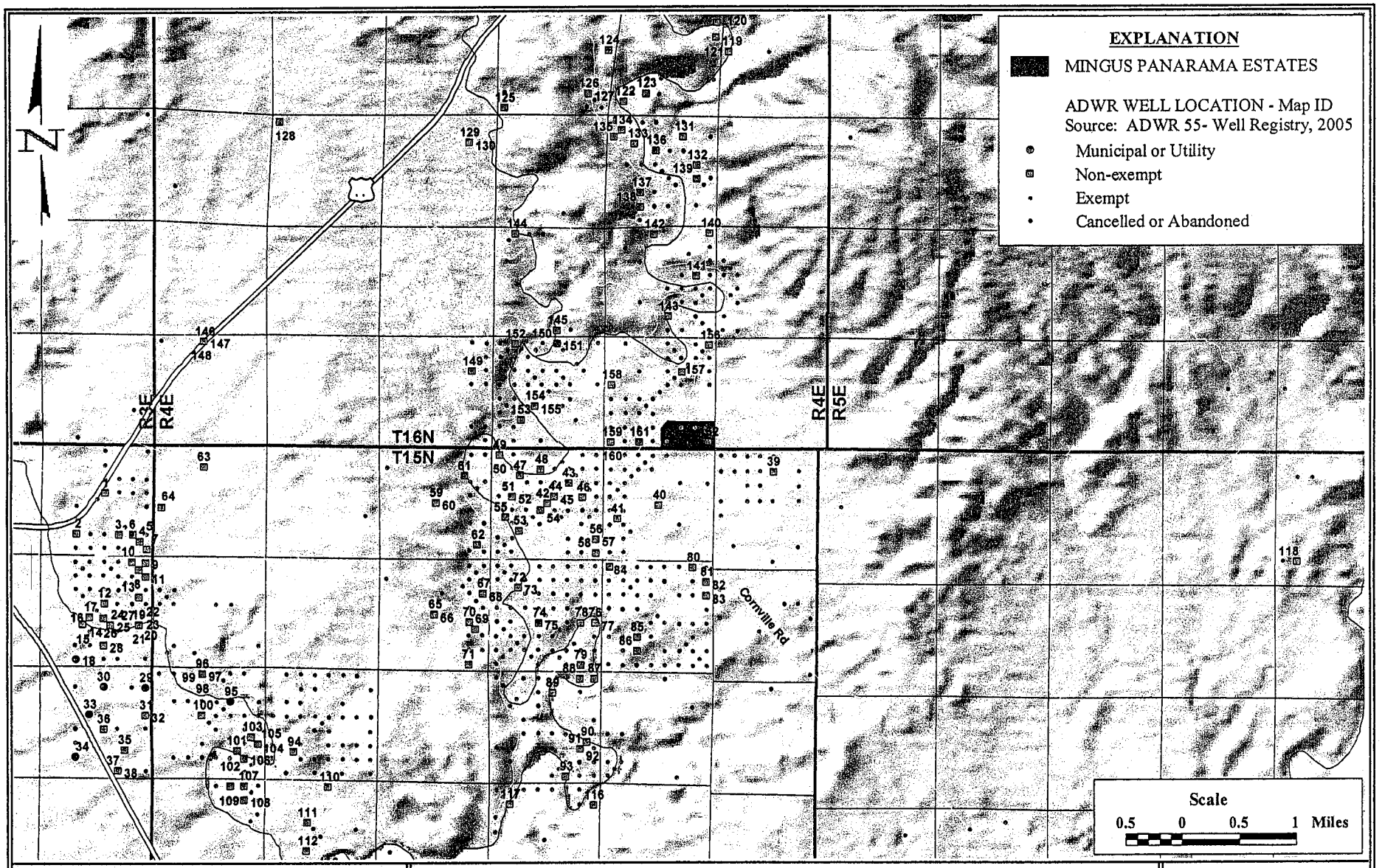

Southwest Ground-water Consultants, Inc.

August 3, 2006 **Project B.1293**

ADWR WELL LOCATION MAP

Mingus Panorama Estates, Yavapai County, Arizona

Figure 4

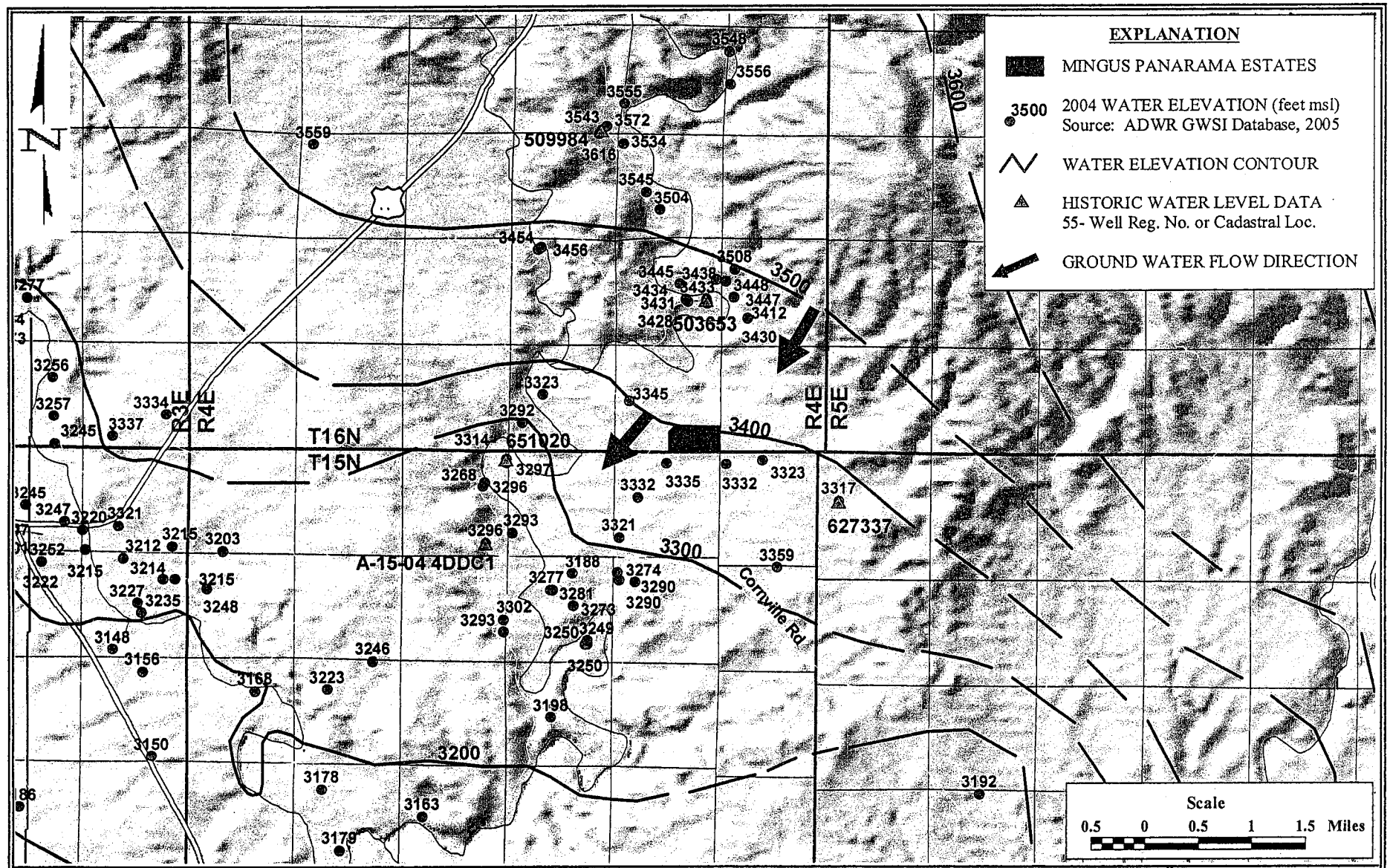

Southwest Ground-water Consultants, Inc.

August 3, 2006 Project B.1293

2004 WATER LEVEL MAP

Mingus Panorama Estates, Yavapai County, Arizona

Figure 5

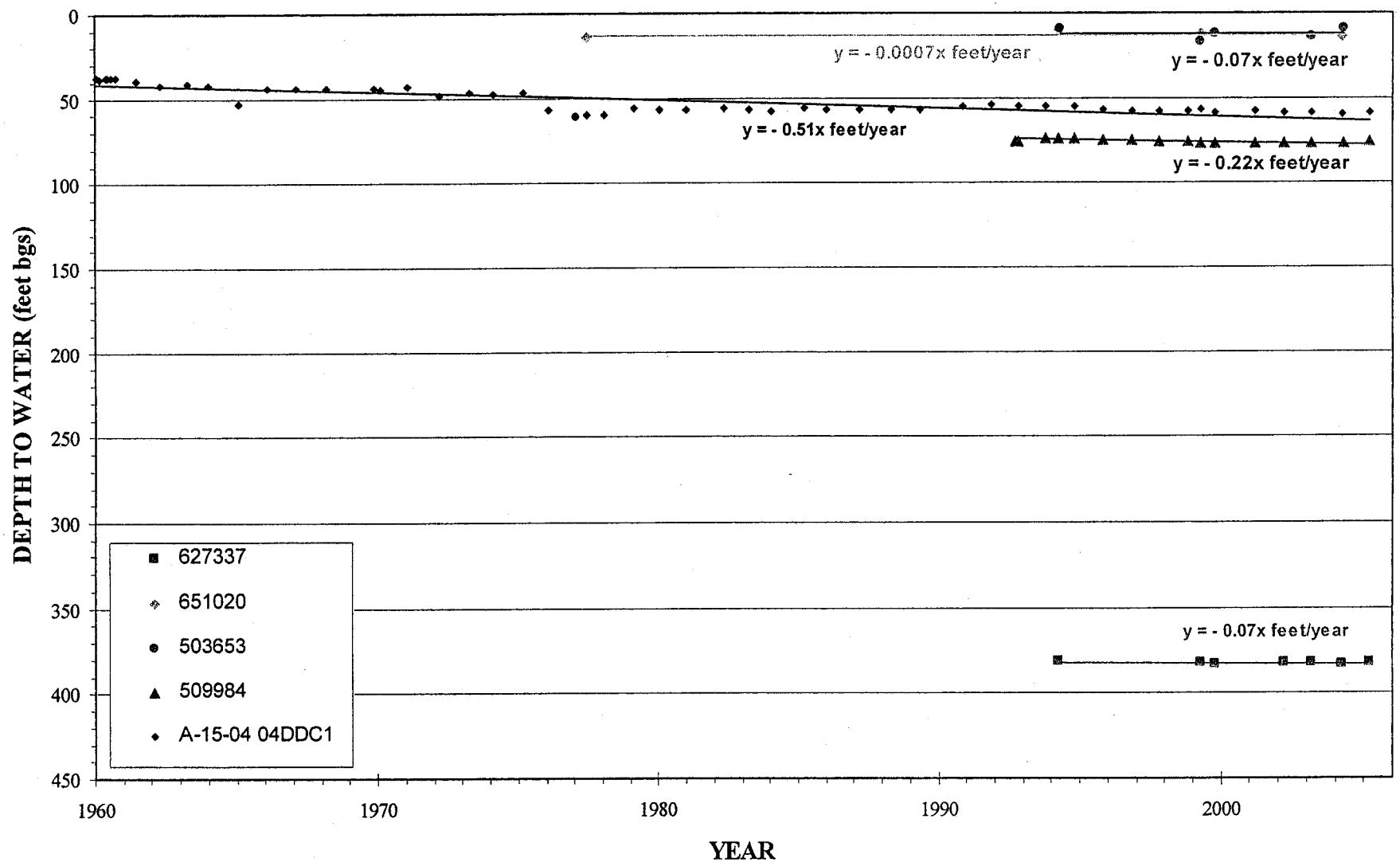

Southwest Ground-water Consultants, Inc.

August 3, 2006 **Project B.1293**

HISTORIC WATER LEVELS

Mingus Panorama Estates, Yavapai County, Arizona

Figure 6

APPENDICES

ADWR WELL REGISTRY

APPENDIX A
ADWR WELL INVENTORY

Map ID	ADWR Reg.	T		R		Sect	Acre160	Acre 40	Acre 10	Well Type	Well Use	Water Use	Date	Depth	WL	Width	Pump Rate	Test Rate	DD	Drill Log	Owner	Cancel
	628727	15.0	N	3.0	E	1				EXEMPT	WP	D	2/14/1974	150	40	6	20				ANDERSON,J A	
	637465	15.0	N	3.0	E	1				EXEMPT	WP	IRR,D,S	1/1/1965	160	26	6	25	25	0		ROBINSON, WILLIAM,B	
	800242	15.0	N	3.0	E	1				EXEMPT	WP	D	1/1/1973								CAHOE,M M	
	532442	15.0	N	3.0	E	1				EXPL	GEOTECH	NONE									ADOT,	Y
	808180	15.0	N	3.0	E	1				EXEMPT											TURNER	
	649289	15.0	N	3.0	E	1	NE	NE	NE	EXEMPT	WP	D					35				CRAMBLETT,J F	
	647596	15.0	N	3.0	E	1	NE	NW	NW	EXEMPT	WP	D	1/1/1967	220		6					BUTLER,R V	
	647194	15.0	N	3.0	E	1	NE	NW	SW	EXEMPT	WP	D		135							JENNINGS	
	647608	15.0	N	3.0	E	1	NE	NW	SW	EXEMPT	WP	D	4/21/1971	145	35	8	35	35	0		WERNER & SCHIMANSKI	
	650061	15.0	N	3.0	E	1	NE	SW	NE	EXEMPT	WP	D				6					CAVANAUGH	
1	628244	15.0	N	3.0	E	1	NE	SW	SW	NON-EXEMPT	WP	D	3/30/1978	165	155	6	36	36	0		DIRE	
	647187	15.0	N	3.0	E	1	NE	SW	SE	EXEMPT	WP	D									HEGNA,D K	
	647188	15.0	N	3.0	E	1	NE	SW	SE	EXEMPT	WP	D									MATLOCK	
	647205	15.0	N	3.0	E	1	NE	SW	SE	EXEMPT	WP	D	10/27/1973	150	42	6	17	17	0		COLEMAN,D A	
	647328	15.0	N	3.0	E	1	NE	SW	SE	EXEMPT	WP	D,IRR					20	20	0		JOHNSON,J C	
	648637	15.0	N	3.0	E	1	NE	SW	SE	EXEMPT	WP	D,S	1/1/1940	400		6	35	35	0		CLARK,H B	
	649834	15.0	N	3.0	E	1	NE	SW	SE	EXEMPT	WP	D	4/1/1974	200		6	34	34	0		ROSENBARGER	
	647181	15.0	N	3.0	E	1	NE	SE	NE	EXEMPT	WP	D		85		6					BIGALOW, JR.	Y
	564585	15.0	N	3.0	E	1	NE	SE	NE	EXEMPT	WP	D	9/3/1997	200	60	6	16		50	X	BIGALOW, JR.	
	647603	15.0	N	3.0	E	1	NE	SE	NW	EXEMPT	WP, ABAN	D	7/20/1973	100		6	25	25	0		LAMB	Y
	564821	15.0	N	3.0	E	1	NE	SE	NW	EXEMPT	WP	D		250	65	6				X	LAMB	
	647609	15.0	N	3.0	E	1	NE	SE	SW	EXEMPT	WP	D									MOOSMAN,R V	
	647189	15.0	N	3.0	E	1	NE	SE	SW	EXEMPT	WP	D									VANDERHOEF,G L	
	649296	15.0	N	3.0	E	1	NE	SE	SE	EXEMPT	WP	D		150		8					HILBERT,L W	
	647195	15.0	N	3.0	E	1	NE	SE	SE	EXEMPT	WP	D		150							STEGER	
	647191	15.0	N	3.0	E	1	NE	SE	SE	EXEMPT	WP	D	3/3/1974	245	70	6	30	18	0	X	STORY	
	650062	15.0	N	3.0	E	1	NE	SE	SE	EXEMPT	WP	D	1/1/1972	250	85	6				X	CRISWELL	
	647582	15.0	N	3.0	E	1	NE	SE	SE	EXEMPT	WP	D				6					RENNIE SR,C A	
	528979	15.0	N	3.0	E	1	NE	SE	SE	EXEMPT	WP	D	8/10/1990	210	64	6	25	17		X	COLEMAN, ALAN,	
	645928	15.0	N	3.0	E	1	SW	NE	NW	EXEMPT	WP	D	1/1/1950	125	90	4	35	35	0		HAFLEY	
	545359	15.0	N	3.0	E	1	SW	NE	SW	EXEMPT	WP	D		300	85	6				X	WILLIAMS, CLEVELAND,W	N
	644478	15.0	N	3.0	E	1	SW	NE	SW	EXEMPT	CAP	D									WILLIAMS, CLEVELAND,W	
	647123	15.0	N	3.0	E	1	SW	NE	SW	EXEMPT	WP	D	1/1/1973	167	90	6	35	35	0		VERDE VLY CHRISTIAN,	
	548264	15.0	N	3.0	E	1	SW	SE	NE	EXEMPT	WP	D	3/12/1995	165	55	6				X	ROHN	
	548266	15.0	N	3.0	E	1	SW	SE	NE	EXEMPT	WP	D	3/14/1995	170	55	6				X	SMITH	
	559136	15.0	N	3.0	E	1	SW	SE	NE	EXEMPT	WP	D	9/16/1996	200	55	6	18	18		X	CARLTON	
	561769	15.0	N	3.0	E	1	SW	SE	NE	EXEMPT	WP	D	4/23/1997	197	50	6	20	20	0	X	STOCKBRIDGE, T J,	
	564999	15.0	N	3.0	E	1	SW	SE	NE	EXEMPT	WP	D		200	55	6	30	30		X	CRITTENDEN	
	548265	15.0	N	3.0	E	1	SW	SE	NE	EXEMPT	WP	D	3/13/1995	175	50	6				X	ROBINSON	
	548267	15.0	N	3.0	E	1	SW	SE	NE	EXEMPT	WP	D	3/20/1995	170	55	6				X	WINEBARGER	
	569454	15.0	N	3.0	E	1	SW	SE	NE	EXEMPT	WP	D	10/22/1998	200	58	6				X	ALMADA	
	584094	15.0	N	3.0	E	1	SW	SE	NE	EXEMPT	WP	D	11/10/2000	200	72	6				X	HUGUNIN	
	584095	15.0	N	3.0	E	1	SW	SE	NE	EXEMPT	WP	D	11/11/2000	250	70	6	16	16		X	SLAUTER	
	202142	15.0	N	3.0	E	1	SW	SE	NE	EXEMPT	WP	D									TREYTON FINANCIAL SERVICE	
2	808383	15.0	N	3.0	E	1	SW	SE	NW	NON-EXEMPT	WP	D	1/1/1940	370	85	8					BLUE RIBBON INDUSTRIES IN	
	586646	15.0	N	3.0	E	1	SW	SE	NW	EXEMPT	WP	D	5/1/2001	280	60	6				X	ODONNELL	
	594358	15.0	N	3.0	E	1	SW	SE	NW	EXEMPT	WP	D		300	100	6				X	TREYTON FINANCIAL SERVICE	
	200745	15.0	N	3.0	E	1	SW	SE	NW	EXEMPT	WP	D		300	84	5				X	HELGESON	
	802629	15.0	N	3.0	E	1	SW	SE	SW	EXEMPT	WP	D	8/22/1997	230	80	6	16	16	0		WIETERS	
	586008	15.0	N	3.0	E	1	SW	SE	SW	EXEMPT	WP	D	4/9/2001	250	80	6				X	BERTINO	
	802348	15.0	N	3.0	E	1	SW	SE	SE	EXEMPT	WP	D,IRR									KIMBALL,H L	
	565823	15.0	N	3.0	E	1	SW	SE	SE	EXEMPT	WP	D		200	55	6				X	MELIND	
	561115	15.0	N	3.0	E	1	SW	SE	SE	EXEMPT	WP	D	2/4/1997	200	55	6				X	WALSH	
	579627	15.0	N	3.0	E	1	SW	SE	SE	EXEMPT	WP	D	5/16/2000	250	40	6				X	MIDDELSTORB	
	589132	15.0	N	3.0	E	1	SW	SE	SE	EXEMPT	WP	D	12/22/2001	300	125	6				X	ALLRED	

Source: ADWR 55- Well Registry, 2005

APPENDIX A
ADWR WELL INVENTORY

Map ID	ADWR Reg.	T		R		Sect	Acre160	Acre 40	Acre 10	Well Type	Well Use	Water Use	Date	Depth	WL	Width	Pump Rate	Test Rate	DD	Drill Log	Owner	Cancel
	591576	15.0	N	3.0	E	1	SW	SE	SE	EXEMPT	WP	D	11/20/2002	225	80	6				X	MITCHELL	
	900703	15.0	N	3.0	E	1	SW	SE	SE	EXEMPT		D		300	100	6				X	MULCAIRE	
	629726	15.0	N	3.0	E	1	SE			EXEMPT	WP	D				6	11				PREWITT	
	557642	15.0	N	3.0	E	1	SE	NE	NE	EXEMPT	WP	D									LUND, FRANK,L	Y
	511329	15.0	N	3.0	E	1	SE	SW	NE	EXEMPT	WP	D	6/8/1985	200	47	6	15	15		X	COATS	
	537540	15.0	N	3.0	E	1	SE	SW	NE	EXEMPT	WP	D	8/31/1993	200	65	8	15	37		X	FOSTER, LEE,W	
	563634	15.0	N	3.0	E	1	SE	SW	NE	EXEMPT	WP	D		200	55	6	20	20		X	DIRE	
	807176	15.0	N	3.0	E	1	SE	SW	NE	EXEMPT	WP	D	3/3/1973								WILCOX, ERNEST,J	
3	511321	15.0	N	3.0	E	1	SE	SW	NE	NON-EXEMPT	WP	D	6/7/1985	200	41	6	15	15		X	PIPER	
	519074	15.0	N	3.0	E	1	SE	SW	NE	EXEMPT	WP	D	9/25/1987	212	60		10	10		X	EMRY, FRANK,W	
	564119	15.0	N	3.0	E	1	SE	SW	NE	EXEMPT	WP	D	8/13/1997	300						X	WILCOX, ERNEST,	
	601218	15.0	N	3.0	E	1	SE	SW	NW	EXEMPT	WP	D	3/12/1979	162	35	6	28	28	0		WEBB	
	601526	15.0	N	3.0	E	1	SE	SW	NW	EXEMPT	WP	D,S,IRR	1/1/1968	250	70	8					GENOVESE	
	602392	15.0	N	3.0	E	1	SE	SW	NW	EXEMPT	WP	D	11/1/1978	200	52	6					WALTERS, RICHARD,	
	624515	15.0	N	3.0	E	1	SE	SW	NW	EXEMPT	WP	D	3/17/1980	150	41	6	30	30	0		NIDEY,R A	
	802930	15.0	N	3.0	E	1	SE	SW	NW	EXEMPT	WP	D	7/12/1978	185	68	6	20	20	0		HOPKINS	N
	507898	15.0	N	3.0	E	1	SE	SW	NW	EXEMPT	WP	D	5/16/1984	196	55	6	32	32		X	SCHNEIDER	
	647607	15.0	N	3.0	E	1	SE	SW	NW	EXEMPT	WP	D	12/31/1977	150	90	6	75				BUCKNER & BENALLY	
	535692	15.0	N	3.0	E	1	SE	SW	NW	EXEMPT	WP	D	11/14/1992	150	40	6	15	15		X	DEAL, NORMAN,R	
	537316	15.0	N	3.0	E	1	SE	SW	NW	EXEMPT	WP	D	7/6/1992	154	67	6	15	15		X	ZIDEK, FRANK,P	
	624516	15.0	N	3.0	E	1	SE	SW	NW	EXEMPT	WP	D		109	54	6	23	23	0		NIDEY,R A	
	087780	15.0	N	3.0	E	1	SE	SW	SW	EXEMPT	WP	D	4/1/1981	200	60	6					HEATH	
	505360	15.0	N	3.0	E	1	SE	SW	SW	EXEMPT	WP	D	3/9/1983	225	70	6	15	15		X	GOVE	
	509579	15.0	N	3.0	E	1	SE	SW	SW	EXEMPT	WP	D	11/7/1984	200	80	6	10	10		X	FREDENBURG	
	649182	15.0	N	3.0	E	1	SE	SW	SW	EXEMPT	WP	D	3/30/1978	250		6	35	35	0		HENDERSON,C E	
	802758	15.0	N	3.0	E	1	SE	SW	SW	EXEMPT	WP	D									HOPKINS	Y
	804578	15.0	N	3.0	E	1	SE	SW	SW	EXEMPT	WP	IRR,D									JENNINGS	
	505350	15.0	N	3.0	E	1	SE	SW	SW	EXEMPT	WP	D	3/10/1983	250	70	6	15	15		X	GOVE	
	805843	15.0	N	3.0	E	1	SE	SW	SW	EXEMPT	WP	D	12/31/1968								EARL, STANLEY,L	
	511936	15.0	N	3.0	E	1	SE	SW	SE	EXEMPT	WP	D	7/31/1985	203	41	6	15	15		X	GOVE	
	901132	15.0	N	3.0	E	1	SE	SW	SE	EXEMPT		D		220	108	6				X	HEYERT	
	648564	15.0	N	3.0	E	1	SE	SW	SE	EXEMPT	WP	D	9/1/1977	150	38	6	20	20	0		CLARK,A R	
	649555	15.0	N	3.0	E	1	SE	SW	SE	EXEMPT	WP	D	9/1/1977	150	38	6	20	20	0		CLARK,A R	
	802738	15.0	N	3.0	E	1	SE	SW	SE	EXEMPT	WP	D									WILKENING, ADAM,R	
	802868	15.0	N	3.0	E	1	SE	SW	SE	EXEMPT	WP	D	1/30/1979	178		6					MARTINEZ, FRANK,O	
	803877	15.0	N	3.0	E	1	SE	SW	SE	EXEMPT	WP	IRR,D	9/5/1972	135	45	6	25				STRAUSS, BETTY JEAN,	
	500664	15.0	N	3.0	E	1	SE	SW	SE	EXEMPT	WP	D	1/1/1981	200		6		25	0	X	BUNSIC,F	
	502251	15.0	N	3.0	E	1	SE	SW	SE	EXEMPT	WP	D	10/19/1994	200	55	6	5	5	0	X	SAAB	
	807635	15.0	N	3.0	E	1	SE	SW	SE	EXEMPT											KELLY	
	567557	15.0	N	3.0	E	1	SE	SW	SE	EXEMPT	WP	D	3/27/1998	200	45	6	16	16		X	MAHON	
4	626464	15.0	N	3.0	E	1	SE	SE		NON-EXEMPT	WP	D									COOK,G R	
5	626465	15.0	N	3.0	E	1	SE	SE		NON-EXEMPT	WP	D									NICOLELLA, CARMELLA,	
	641855	15.0	N	3.0	E	1	SE	SE	NE	EXEMPT	WP	D	10/21/1976	175	40	6	25	25	0		ANDREWS,S G	
	807551	15.0	N	3.0	E	1	SE	SE	NE	EXEMPT	WP	D	10/21/1976	175	80	6	22	25		I	MAHARRY	
	569621	15.0	N	3.0	E	1	SE	SE	NE	EXEMPT	WP	D	8/25/1998	250	100	6				X	HANDVERGER	
	807798	15.0	N	3.0	E	1	SE	SE	NE	EXEMPT	WP	D									WESIGHAN	
	646475	15.0	N	3.0	E	1	SE	SE	NW	EXEMPT	WP	D	1/1/1973	165	40	6	35	35	0		PETIT, VICTOR,B	
	647190	15.0	N	3.0	E	1	SE	SE	NW	EXEMPT	WP	D	7/9/1997	290	110	6	17	17		X	TURNER	
6	806182	15.0	N	3.0	E	1	SE	SE	NW	NON-EXEMPT	WP	D	12/31/1979								JEWELL, RICHARD,	
	806662	15.0	N	3.0	E	1	SE	SE	NW	EXEMPT	WP	D	8/31/1973	200	44	6	30				SCOTT, NATALIE,K	
	508291	15.0	N	3.0	E	1	SE	SE	NW	EXEMPT	WP	D	6/7/1984	165	60	8				X	MOSES,L	
	807563	15.0	N	3.0	E	1	SE	SE	NW	EXEMPT	WP	D		240	57					X	INGERSOLL	
	802212	15.0	N	3.0	E	1	SE	SE	NW	EXEMPT	WP	D	10/25/1978	250	58	8	30	30	0		ALEXANDER, CHERYL,A	
	563197	15.0	N	3.0	E	1	SE	SE	NW	EXEMPT	WP	D								X	TURNER	Y
	807624	15.0	N	3.0	E	1	SE	SE	SW	EXEMPT											WOLFE	

Source: ADWR 55- Well Registry, 2005

APPENDIX A
ADWR WELL INVENTORY

Map ID	ADWR Reg.	T		R		Sect	Acre160	Acre 40	Acre 10	Well Type	Well Use	Water Use	Date	Depth	WL	Width	Pump Rate	Test Rate	DD	Drill Log	Owner	Cancel
	800266	15.0	N	3.0	E	1	SE	SE	SW	EXEMPT	WP	D									ELDER,D B	
	603328	15.0	N	3.0	E	1	SE	SE	SW	EXEMPT	WP	D	6/13/1979	147		6	30	30	0		MOSER,D F	
	802662	15.0	N	3.0	E	1	SE	SE	SW	EXEMPT	WP	D	1/1/1968								MARTIN	
	650794	15.0	N	3.0	E	1	SE	SE	SW	EXEMPT	WP	D		200	40	6					SIMPSON, JOHN,P	
	807680	15.0	N	3.0	E	1	SE	SE	SW	EXEMPT											MURRAY	
	591581	15.0	N	3.0	E	1	SE	SE	SW	EXEMPT	WP	D		225	80	6				X	MAPLE	
	596662	15.0	N	3.0	E	1	SE	SE	SW	EXEMPT	WP	D	5/12/2003	300	80	6				X	ALDER	
	086739	15.0	N	3.0	E	1	SE	SE	SE	EXEMPT	WP	D	1/1/1981	185	120	6					CORETHERS	
	501831	15.0	N	3.0	E	1	SE	SE	SE	EXEMPT	WP	D	3/1/1982	250	90	6	15	15		X	VEGA,L	
	549913	15.0	N	3.0	E	1	SE	SE	SE	EXEMPT	WP	D									SHADIS, SUZANNE,	Y
	568802	15.0	N	3.0	E	1	SE	SE	SE	EXEMPT	WP	D	8/18/1998	61	51	6				X	HINCKLEY	
	806841	15.0	N	3.0	E	1	SE	SE	SE	EXEMPT	WP	D	12/31/1976	209	46	8					BAKER, CARROLL,	
7	507365	15.0	N	3.0	E	1	SE	SE	SE	NON-EXEMPT	WP	D	3/7/1984	180	70	6	15	15		X	RAZO	
	902910	15.0	N	3.0	E	1	SE	SE	SE	EXEMPT		D									GLENARM LAND CO	
	203707	15.0	N	3.0	E	1	SE	SE	SE	EXEMPT	WP	D		275	98	7				X	SNITNER	
	631228	15.0	N	3.0	E	12				EXEMPT	WP	D				6	7	7	0		HEATH,D	
	637464	15.0	N	3.0	E	12				EXEMPT	WP	IRR,S,D	1/1/1955	140	27	6	20	20	0		BROWNELL, GENE,F	
	573692	15.0	N	3.0	E	12				EXEMPT											BRIGGS	
	643005	15.0	N	3.0	E	12	NE			EXEMPT	WP	D	10/1/1976	125		8	10	10	0		FAIN,H A	
	651081	15.0	N	3.0	E	12	NE			EXEMPT	WP	D		103	70	6	15	15	0		BRYANT,N G	
	802031	15.0	N	3.0	E	12	NE	NE		EXEMPT	WP	D	8/1/1997	200	60	6	16	16	0		SAYLES	
	802254	15.0	N	3.0	E	12	NE	NE		EXEMPT	WP	D	6/9/1980	155	64		20	20	0		WESTERN SAVINGS,	
8	803356	15.0	N	3.0	E	12	NE	NE		NON-EXEMPT	WP	IRR,D	11/16/1978	202	37	6	35				JACK AND PAULA VOEGLER LI	
	511746	15.0	N	3.0	E	12	NE	NE	NE	NON-EXEMPT	WP	D									BROWN,C	Y
	631307	15.0	N	3.0	E	12	NE	NE	NE	EXEMPT	WP	D	1/1/1948	450	16	12					BURKHART	
	631308	15.0	N	3.0	E	12	NE	NE	NE	EXEMPT	WP	D									NAKATA,G K	
	632211	15.0	N	3.0	E	12	NE	NE	NE	EXEMPT	WP	D,IRR	1/1/1973	200		6	12	12	0		GLENDENNING, MARY,A	
	645159	15.0	N	3.0	E	12	NE	NE	NE	EXEMPT	WP	D	1/1/1975	250	35	6	15	15	0		HALSEY,M	
	649781	15.0	N	3.0	E	12	NE	NE	NE	EXEMPT	WP	D		167	60	8					TIPTON	
	802257	15.0	N	3.0	E	12	NE	NE	NE	EXEMPT	WP	IRR	7/10/1964	255	27	8	35	35	0		SURAKUS	
9	511199	15.0	N	3.0	E	12	NE	NE	NE	NON-EXEMPT	WP	D	6/13/1985	200	50	6	16	15		X	RALSTON	
	802258	15.0	N	3.0	E	12	NE	NE	NE	EXEMPT	WP	D	1/1/1965	150		6					SCHMID,R F	
	644495	15.0	N	3.0	E	12	NE	NE	NE	EXEMPT	WP	D	1/1/1956	100		8					BAKER	
	563497	15.0	N	3.0	E	12	NE	NE	NE	EXEMPT	WP	D	8/10/1997	150	50	6				X	SMITH, ROBERT,	
	086267	15.0	N	3.0	E	12	NE	NE	NE	EXEMPT	WP	D	10/1/1980	200	37	6	13	18			MC CLELLAN,B R	
	582049	15.0	N	3.0	E	12	NE	NE	NE	EXEMPT	WP	D	9/29/2000	500	66	6	25	35		X	BAKER	
	505163	15.0	N	3.0	E	12	NE	NE	NW	EXEMPT	WP	D	4/9/1983	150	41	6	20	20		X	FIRST INTERSTATE BK,	
10	511342	15.0	N	3.0	E	12	NE	NE	NW	NON-EXEMPT	WP	D	6/6/1985	185	47	6	15	15		X	RENDESSY, JAMES,	
	512906	15.0	N	3.0	E	12	NE	NE	NW	EXEMPT	WP	D	12/11/1985	170	30	6				X	NELSON, WALTER,H	
	523374	15.0	N	3.0	E	12	NE	NE	NW	EXEMPT	WP	D	2/25/1989	180	30	6	10	10		X	JOHNSON, MARSHA,L	
	523486	15.0	N	3.0	E	12	NE	NE	NW	EXEMPT	WP	D	8/15/1989	185	40	6				X	KENNICK, STANLEY,	
	534343	15.0	N	3.0	E	12	NE	NE	NW	EXEMPT	WP	D	2/20/1992	300	100	7				X	GARSIDE	
	538193	15.0	N	3.0	E	12	NE	NE	NW	EXEMPT	WP	D	3/6/1993	202	32	6	25	23		X	TYBROSKI, MICHAEL,W	
	630497	15.0	N	3.0	E	12	NE	NE	NW	EXEMPT	WP	D	3/21/1970	166	55	6					FULGHUM,J C	
	651110	15.0	N	3.0	E	12	NE	NE	NW	EXEMPT	WP	D	1/1/1973	160		6					LOTTON,G E	
	802797	15.0	N	3.0	E	12	NE	NE	NW	EXEMPT	WP	D,IRR	8/1/1960	120	94	6	16	16	0		MC KINNON	
	503611	15.0	N	3.0	E	12	NE	NE	NW	EXEMPT	WP	D	8/4/1982	225	48	6	30	30	0	X	PFEIFER,C	
	505161	15.0	N	3.0	E	12	NE	NE	NW	EXEMPT	WP	D	1/20/1983	150	26	6	20	20		X	MATLEY,F	
	511977	15.0	N	3.0	E	12	NE	NE	NW	EXEMPT	WP	D	8/12/1985	180	34	6	30	50		X	RILEY,H D	
	518531	15.0	N	3.0	E	12	NE	NE	NW	EXEMPT	WP	D	7/21/1987	700	30	6	30	30		X	SOMMERS	
	641857	15.0	N	3.0	E	12	NE	NE	NW	EXEMPT	WP	D									FOREMAN ET AL,P R	
	640767	15.0	N	3.0	E	12	NE	NE	NW	EXEMPT	WP	D	4/1/1973	150	40	6	15	15	0		TATSCH,B R	
	630496	15.0	N	3.0	E	12	NE	NE	NW	EXEMPT	WP	D		125	50	6	20	20	0		FULGHUM,J C	
	550502	15.0	N	3.0	E	12	NE	NE	NW	EXEMPT	WP	D	1/4/1996	170	40	6				X	SPERA	
	590243	15.0	N	3.0	E	12	NE	NE	NW	EXEMPT	WP	D									ZIEMKOWSKI	Y

Source: ADWR 55- Well Registry, 2005

APPENDIX A
ADWR WELL INVENTORY

Map ID	ADWR Reg.	T		R		Sect	Acre160	Acre 40	Acre 10	Well Type	Well Use	Water Use	Date	Depth	WL	Width	Pump Rate	Test Rate	DD	Drill Log	Owner	Cancel
	597027	15.0	N	3.0	E	12	NE	NE	NW	EXEMPT	WP	D,S	3/27/2003	250	57	7				X	MC KINNON	
	643607	15.0	N	3.0	E	12	NE	NE	SW	EXEMPT	WP	D	1/1/1978	200	54	6	20	20		X	HUBIAK	
	805663	15.0	N	3.0	E	12	NE	NE	SW	EXEMPT	WP	D	11/30/1979	160			15				HART	
	513049	15.0	N	3.0	E	12	NE	NE	SW	EXEMPT	WP	D	12/10/1982	180	46	6	17			X	GROAT JR	
	533866	15.0	N	3.0	E	12	NE	NE	SW	EXEMPT	WP	D	3/27/1992	150	40	6	25	25		X	SCHINAGEL, GERALD,	
	507749	15.0	N	3.0	E	12	NE	NE	SE	EXEMPT	WP	D	5/2/1984	175	55	6	15	15		X	WHETTEN,F	
	542291	15.0	N	3.0	E	12	NE	NE	SE	EXEMPT	WP	D	2/6/1994	175	60	6	30	30		X	BOLTON	
11	612316	15.0	N	3.0	E	12	NE	NE	SE	NON-EXEMPT	WP	IRR,S,D	1/1/1936	400	17	8					LANGLEY,V H	
	642926	15.0	N	3.0	E	12	NE	NE	SE	EXEMPT	WP	D,IRR	1/1/1958	147	38	8	25	25	0		ROMIG	
	502999	15.0	N	3.0	E	12	NE	NE	SE	EXEMPT	WP	D	6/1/1982	215	94	6	15	15	0	X	PENDER,J D	
	513845	15.0	N	3.0	E	12	NE	NE	SE	EXEMPT	WP	D	4/4/1986	200	30	6	15			X	ELIJAH	
	519058	15.0	N	3.0	E	12	NE	NE	SE	EXEMPT	WP	D	10/14/1987	200	60	6	20	24		X	EDWARDS	
	086738	15.0	N	3.0	E	12	NE	NE	SE	EXEMPT	WP	D	1/1/1981	170	125	6	30	30			KIRK,M E	
	587528	15.0	N	3.0	E	12	NE	NE	SE	EXEMPT	WP	D		250	80	6				X	ELIJAH	
	641808	15.0	N	3.0	E	12	NE	NW		EXEMPT	WP	D	2/22/1980	162	31	6	12	12	0		ABRAMOVICH	
	630007	15.0	N	3.0	E	12	NE	NW		EXEMPT	WP	D		146	40	6	20	20	0		JUBB	
	630542	15.0	N	3.0	E	12	NE	NW		EXEMPT	WP	D	1/20/1973	150	85	6	25	25	0		COLEMAN,L J	
	630720	15.0	N	3.0	E	12	NE	NW		EXEMPT	WP	D									BLOUNT,W A	
	632549	15.0	N	3.0	E	12	NE	NW		EXEMPT	CAP	D									MAHON	
	641110	15.0	N	3.0	E	12	NE	NW		EXEMPT	WP	D,IRR				6					FINNEY SR	
	645399	15.0	N	3.0	E	12	NE	NW		EXEMPT	WP	D	3/19/1972	160	50	6	20	20	0		BRUNNER	
	802407	15.0	N	3.0	E	12	NE	NW		EXEMPT	WP	D	4/15/1981	140	110	6	12	12	0		FRAZIER	
	802585	15.0	N	3.0	E	12	NE	NW		EXEMPT	WP	D	7/1/1969	132	20	6	25	25	0		HILBERT, GARRET,L	
	805008	15.0	N	3.0	E	12	NE	NW		EXEMPT	WP	D	1/1/1955								DUNCAN, RICHARD,	
	805479	15.0	N	3.0	E	12	NE	NW		EXEMPT	WP	D		160	20	6	15				HULCE, HAROLD & K,	
	602891	15.0	N	3.0	E	12	NE	NW	NE	EXEMPT	WP	D	3/1/1974	250	50	6	20	20	0	X	GORDON	
	637161	15.0	N	3.0	E	12	NE	NW	NE	EXEMPT	WP	D									SKAGGS	
	642171	15.0	N	3.0	E	12	NE	NW	NE	EXEMPT	WP	D	1/1/1975	163		7	30	30	0		JOHNSON, J.C.,	
	650053	15.0	N	3.0	E	12	NE	NW	NE	EXEMPT	WP	D	8/30/1970	110	35	6	15	15	0		CROOKS, JOAN MARIE,	
	805140	15.0	N	3.0	E	12	NE	NW	NE	EXEMPT	WP	D	12/27/1978	250	80	6	20	35		X	FINLEY	
	807559	15.0	N	3.0	E	12	NE	NW	NE	EXEMPT	WP	D	12/31/1978	200	75	6	18				PALMER, JERRY,	
	503672	15.0	N	3.0	E	12	NE	NW	NE	EXEMPT	WP	D	8/5/1982	200	45	6	12	12	0	X	HATCH,J	
	503673	15.0	N	3.0	E	12	NE	NW	NE	EXEMPT	WP	D	8/6/1982	200	53	6	10	10	0	X	HOWELL,C	
	551006	15.0	N	3.0	E	12	NE	NW	NE	D, S, E	WP	D	8/18/1995	170	50	6	16	16		X	JULIAN & WALTER	
	562408	15.0	N	3.0	E	12	NE	NW	NE	EXEMPT	WP	D	5/9/1997	192	45	6				X	HILBERT, GEORGE,	
	567747	15.0	N	3.0	E	12	NE	NW	NE	EXEMPT	WP	D	6/17/1998	200	52	6	20	20		X	POULTER	
	807838	15.0	N	3.0	E	12	NE	NW	NE	EXEMPT	WP	D									URIBE	
	580909	15.0	N	3.0	E	12	NE	NW	NE	EXEMPT	WP	D	6/30/2000	243	55	6				X	DRAKE	
	644612	15.0	N	3.0	E	12	NE	NW	NW	EXEMPT	WP	D	10/5/1993	200	50						ELLISON	
	511873	15.0	N	3.0	E	12	NE	NW	NW	EXEMPT	WP	D	7/27/1985	185	43	6	20	20		X	MIKELL,K	
	518775	15.0	N	3.0	E	12	NE	NW	NW	EXEMPT	WP	D	8/27/1987	160	40	6				X	MACHADO, DANIEL,	
	208835	15.0	N	3.0	E	12	NE	NW	NW	EXEMPT	WP	D									FELLER	
	208482	15.0	N	3.0	E	12	NE	NW	NW	EXEMPT	WP	D									HAVENS	
	564481	15.0	N	3.0	E	12	NE	NW	NW	EXEMPT	WP	D									DINGEMANS	
	567548	15.0	N	3.0	E	12	NE	NW	NW	EXEMPT	WP	D	5/27/1998	220	35	6				X	PELLETIER	
	525243	15.0	N	3.0	E	12	NE	NW	SW	EXEMPT	WP	D									HICKS, ZANE & P.,	Y
	525281	15.0	N	3.0	E	12	NE	NW	SW	EXEMPT	WP	D	7/14/1989	200	40	6				X	LEWIS, GILBERT,	
	802473	15.0	N	3.0	E	12	NE	NW	SW	EXEMPT	WP	D	1/1/1962								MEDLEY,E D	
	518893	15.0	N	3.0	E	12	NE	NW	SW	EXEMPT	WP	D	9/8/1987	130	30	6	18	18		X	PAUL, ALMA,	
	519322	15.0	N	3.0	E	12	NE	NW	SW	EXEMPT	WP	D	10/24/1987	130	30	6	15	20		X	MEULEBROECK	
	523110	15.0	N	3.0	E	12	NE	NW	SW	EXEMPT	WP	D	4/25/1989	137	41	6	15	12		X	LID AND JAMES BRUNO	
	805515	15.0	N	3.0	E	12	NE	NW	SW	EXEMPT	WP	D	12/31/1979	200							LEWIS, GILBERT,	
	540102	15.0	N	3.0	E	12	NE	NW	SW	EXEMPT	WP	D,IRR	8/13/1993	200	50	6	20	30		X	MCDONALD	
	540798	15.0	N	3.0	E	12	NE	NW	SW	EXEMPT	WP	D	9/30/1993	200	50	6	12	12		X	HOFMAN	
	501203	15.0	N	3.0	E	12	NE	NW	SE	EXEMPT	WP	D	1/1/1981	180	30	6		15	0	X	JOHNSON, ANGELA,R	

Source: ADWR 55- Well Registry, 2005

APPENDIX A
ADWR WELL INVENTORY

Map ID	ADWR Reg.	T		R		Sect	Acre160	Acre 40	Acre 10	Well Type	Well Use	Water Use	Date	Depth	WL	Width	Pump Rate	Test Rate	DD	Drill Log	Owner	Cancel
	522418	15.0	N	3.0	E	12	NE	NW	SE	EXEMPT	WP	D	10/31/1988	200	50	6	15	15		X	MC CRORY	
	556871	15.0	N	3.0	E	12	NE	NW	SE	EXEMPT	WP	D	12/27/1996	200	45	6				X	MYERS, JAMES,	
	516998	15.0	N	3.0	E	12	NE	NW	SE	EXEMPT	WP	D	3/5/1987	135	30	6	15	15	0	X	COWAN	
	517006	15.0	N	3.0	E	12	NE	NW	SE	EXEMPT	WP	D	3/27/1987	700	87	6				X	MEWHINNEY	
	523375	15.0	N	3.0	E	12	NE	NW	SE	EXEMPT	WP	D	2/28/1989	200	30	6	15	15		X	WALTON, BILLY RAY,	
	566212	15.0	N	3.0	E	12	NE	SW	NE	EXEMPT	WP	D	1/27/1998	200	32	6				X	MC KLEM	
	566213	15.0	N	3.0	E	12	NE	SW	NE	EXEMPT	WP	D	1/30/1998	200	32	6				X	MC KLEM	
	566687	15.0	N	3.0	E	12	NE	SW	NE	EXEMPT	WP	D	3/7/1998	200	33	6		20	0	X	EMMETT	
	566688	15.0	N	3.0	E	12	NE	SW	NE	EXEMPT	WP	D	3/10/1998	200	40	6				X	DURNEZ	
	566645	15.0	N	3.0	E	12	NE	SW	NE	EXEMPT	WP	D	2/11/1998	200	33	6				X	EMMETT	
	566648	15.0	N	3.0	E	12	NE	SW	NE	EXEMPT	WP	D	3/3/1998	200	40	6				X	EMMETT	
	589274	15.0	N	3.0	E	12	NE	SW	NE	EXEMPT	WP	D	1/20/2002	600	465	5				X	MCKLEM	
	631180	15.0	N	3.0	E	12	NE	SW	NW	EXEMPT	WP	D	6/18/1976	182	22	6	30	30	0		LIBLIN, GARY,	
	803248	15.0	N	3.0	E	12	NE	SW	NW	EXEMPT	WP	D									ALLEN, ROBERT,W	
	500761	15.0	N	3.0	E	12	NE	SW	NW	EXEMPT	WP	D	8/14/1981	150	30	6				X	ALLEN,J A	
	204523	15.0	N	3.0	E	12	NE	SW	NW	EXEMPT	WP	D		200	78	7				X	BUSICH	
	502711	15.0	N	3.0	E	12	NE	SW	SW	EXEMPT	WP	D	8/28/1997	250	60	6	20	20	0	X	BERTA, JOSEPH,W	
	512772	15.0	N	3.0	E	12	NE	SW	SW	EXEMPT	WP	D,IRR	10/11/1982	155	45	6		20	0	X	WAGLEY	
	513976	15.0	N	3.0	E	12	NE	SW	SW	EXEMPT	WP	D									PERKINS, LA VAUNE,	Y
	637098	15.0	N	3.0	E	12	NE	SW	SW	EXEMPT	WP	IRR,D	1/1/1974	150		4					SEIPLE,G	
	601661	15.0	N	3.0	E	12	NE	SW	SW	EXEMPT	WP	D									BRATTON,E G	
	637535	15.0	N	3.0	E	12	NE	SW	SW	EXEMPT	WP	D	10/12/1979	150	38	6	15				WOOD, MCKINLY,	
	641307	15.0	N	3.0	E	12	NE	SW	SW	EXEMPT	WP	D	8/21/1997	250	60	6	16	16	0		ROSEMARY HAWKINS REVOCABL	
	648244	15.0	N	3.0	E	12	NE	SW	SW	EXEMPT	WP	D	1/1/1973								DENT,M L	
	800119	15.0	N	3.0	E	12	NE	SW	SW	EXEMPT	WP	D		150		6					BARRERAS,F	
12	802273	15.0	N	3.0	E	12	NE	SW	SW	NON-EXEMPT	WP	D	1/1/1973	152	20	6	126	126	0		MCCORMACK, RICHARD,A	
	802609	15.0	N	3.0	E	12	NE	SW	SW	EXEMPT	WP	D	1/5/1973	92	14	6	14	14	0		REESE, DIANA,L	
	512537	15.0	N	3.0	E	12	NE	SW	SW	EXEMPT	WP	D	10/23/1985	128	23	6	20	15		X	SCHARFENCAMP,,M D	
	521253	15.0	N	3.0	E	12	NE	SW	SW	EXEMPT	WP	D	6/10/1988	200	30	6	16			X	BARRERAS, LAWRENCE,	
	522373	15.0	N	3.0	E	12	NE	SW	SW	D, S, E	WP	D	10/9/1988	135	120	6				X	FREDERICKSON	
	522377	15.0	N	3.0	E	12	NE	SW	SW	EXEMPT	WP	D									STRASSER, ROBERT,	Y
	805646	15.0	N	3.0	E	12	NE	SW	SW	EXEMPT	WP	D									VALLEY NATIONAL BANK,	
	650737	15.0	N	3.0	E	12	NE	SW	SW	EXEMPT	WP	D					35				LAVELLE	
	643010	15.0	N	3.0	E	12	NE	SW	SE	EXEMPT	WP	D	3/18/1975	135	135	6	25	25	0		LOISY,E	
	645290	15.0	N	3.0	E	12	NE	SW	SE	EXEMPT	WP	D	7/1/1980	139		6	8	8	0		MCLASSICK	
	646030	15.0	N	3.0	E	12	NE	SW	SE	EXEMPT	WP	D	12/1/1976	125	16	6					TREJO	
	806865	15.0	N	3.0	E	12	NE	SW	SE	EXEMPT	WP	D	7/23/1994	175	50	6	20	20			MAASKE	
	650344	15.0	N	3.0	E	12	NE	SW	SE	EXEMPT	WP	D	1/1/1977	150	30	6	20	20	0		WORRELL	
	528119	15.0	N	3.0	E	12	NE	SW	SE	EXEMPT	WP	D	5/31/1990	200	25	6	25	25	0	X	WROBLEY, RAY,	
	631090	15.0	N	3.0	E	12	NE	SW	SE	EXEMPT	WP	D	10/15/1977	150		6					POTEET,G S	
	624960	15.0	N	3.0	E	12	NE	SW	SE	EXEMPT	WP	D	2/12/1979	163		6	18	18	0		MOSCHEL,J P	
	087416	15.0	N	3.0	E	12	NE	SW	SE	EXEMPT	WP	D	4/13/1981	170	80	6	15	15	0		HOFMAN, KATHERINE,	
	570910	15.0	N	3.0	E	12	NE	SW	SE	EXEMPT	WP	D	10/27/1998	175	35	6				X	LEON	
	577156	15.0	N	3.0	E	12	NE	SW	SE	EXEMPT			9/15/1999	200	45	6				X	FREW	
	900651	15.0	N	3.0	E	12	NE	SW	SE	EXEMPT		D		200	100	6				X	LENCINAS	
13	610914	15.0	N	3.0	E	12	NE	SE		NON-EXEMPT	WP	IRR	4/25/1974	50	20	8	70	70	0		LASLEY,H L	
	610915	15.0	N	3.0	E	12	NE	SE		EXEMPT	WP	D	7/26/1972	100		6	20	20	0		LASLEY,H L	
	630573	15.0	N	3.0	E	12	NE	SE		EXEMPT	WP	IRR,D,S	4/12/1974	129	22	6	20	20	0		PHILLIPS, CONNIE,S	
	641702	15.0	N	3.0	E	12	NE	SE		EXEMPT	WP	D		125		6	25				CROMER,A H	
	646134	15.0	N	3.0	E	12	NE	SE		EXEMPT	WP	D,IRR		398	25	8	30	30	0		TURNER	
	646955	15.0	N	3.0	E	12	NE	SE		EXEMPT	WP	D,IRR	1/1/1968	140	15	8	20	20	0		WILKES JR,E R	
	648600	15.0	N	3.0	E	12	NE	SE		EXEMPT	WP	D	6/13/1975	150	33	6	20	20	0		FREW, EVA & JOE,	
	802351	15.0	N	3.0	E	12	NE	SE		EXEMPT	WP	D	2/28/1980	120	70	6	20	20	0		WRUCK	
	802787	15.0	N	3.0	E	12	NE	SE		EXEMPT	WP	D	9/3/1970	112	32	6	12	12	0		FERRIN,A D	
	650122	15.0	N	3.0	E	12	NE	SE		EXEMPT	WP	D,S	3/15/1969	110	85	6	20	20	0		HOPKINS,G	

Source: ADWR 55- Well Registry, 2005

APPENDIX A
ADWR WELL INVENTORY

Map ID	ADWR Reg.	T		R		Sect	Acre160	Acre 40	Acre 10	Well Type	Well Use	Water Use	Date	Depth	WL	Width	Pump Rate	Test Rate	DD	Drill Log	Owner	Cancel
	647045	15.0	N	3.0	E	12	NE	SE		EXEMPT	WP	D	1/1/1956	80	14	8	15	15	0		FULLER,L J	
	642589	15.0	N	3.0	E	12	NE	SE		EXEMPT	WP	D									CAMPHUYSEN,E J	
	630574	15.0	N	3.0	E	12	NE	SE		EXEMPT	WP	IRR,D,S	4/2/1954	125	22	6	10	10	0		PHILLIPS, CONNIE,S	
	514360	15.0	N	3.0	E	12	NE	SE	NE	EXEMPT	WP	D	5/21/1986	155	30	6	8	8		X	MCKENZIE, ROBERT,	
	535998	15.0	N	3.0	E	12	NE	SE	NE	EXEMPT	WP	D	8/13/1992	250	60	6	34	18		X	ROBOSSON	
	538751	15.0	N	3.0	E	12	NE	SE	NE	EXEMPT	WP	D	4/6/1994	250	60	6				X	MCKENZIE, ROBERT,	
	504235	15.0	N	3.0	E	12	NE	SE	NE	EXEMPT	WP	D	10/12/1982	130	23	6	30	30	0	X	PEDERSEN	
	512312	15.0	N	3.0	E	12	NE	SE	NE	EXEMPT	WP	D	9/14/1985	200	30	6				X	TILBERG RICHARD,V	
	513348	15.0	N	3.0	E	12	NE	SE	NE	EXEMPT	WP	D	3/24/1987	215	68	6	20	20		X	LANGLEY, VIRGIL,H	
	514349	15.0	N	3.0	E	12	NE	SE	NE	EXEMPT	WP	D	5/22/1986	155	30	6	15	15		X	GAMBEL PROPERTIES LLC	
	560588	15.0	N	3.0	E	12	NE	SE	NE	EXEMPT	WP	D	2/14/1997	200	30	6				X	TILBURG, RICHARD,V	
	578028	15.0	N	3.0	E	12	NE	SE	NE	EXEMPT	WP	D	3/15/2000	202	34	6	15	15	0	X	DETTMAN	
	582419	15.0	N	3.0	E	12	NE	SE	NE	EXEMPT	WP	D	9/2/2000	250	90	6	15	15	0	X	BOSTICK	
	590698	15.0	N	3.0	E	12	NE	SE	NE	EXEMPT	WP	D	3/13/2002					35	0	X	CULVER	
	597341	15.0	N	3.0	E	12	NE	SE	NE	EXEMPT	WP	D									BARBER	Y
	201859	15.0	N	3.0	E	12	NE	SE	NE	EXEMPT	WP	D		300	86	6				X	SEALEY III	
	516648	15.0	N	3.0	E	12	NE	SE	NW	EXEMPT	WP	D									V & B ENTERPRISES IC,	Y
	518917	15.0	N	3.0	E	12	NE	SE	NW	EXEMPT	WP	D	11/16/1987	140	31	6	15	15		X	BARBEE, MURIEL,E	
	630899	15.0	N	3.0	E	12	NE	SE	NW	EXEMPT	WP	D	1/1/1963	75	50	8					MOTTER, KIM,	
	633459	15.0	N	3.0	E	12	NE	SE	NW	EXEMPT	WP	D	1/17/1980	122	28	6	20	20	0		CROMER,H V	
	512783	15.0	N	3.0	E	12	NE	SE	NW	EXEMPT	WP	D	11/12/1985	125	56	6	30	30		X	WALSH, PHINEAS B.,	
	644932	15.0	N	3.0	E	12	NE	SE	NW	EXEMPT	WP	D	12/27/2001	225	85	6				X	WESTERMANN	
	551174	15.0	N	3.0	E	12	NE	SE	NW	D, S, E	WP	D	8/19/1995	225	45	6	12	30		X	DRUMMOND	
	544629	15.0	N	3.0	E	12	NE	SE	SW	EXEMPT	WP	D									SEAY, ROBERT,	Y
	086265	15.0	N	3.0	E	12	NE	SE	SE	EXEMPT	WP	D									MATHEWS,A	Y
	528426	15.0	N	3.0	E	12	NE	SE	SE	EXEMPT	WP	D									BOSTICK, LAWRENCE,H	Y
	641775	15.0	N	3.0	E	12	NE	SE	SE	EXEMPT	WP	D	11/27/1974	135	16	6					WROBLEY,R	
	650343	15.0	N	3.0	E	12	NE	SE	SE	EXEMPT	WP	D	1/1/1972	150	32	6	25	25	0		MATLEY,C	
	503846	15.0	N	3.0	E	12	NE	SE	SE	EXEMPT	WP	D	8/28/1982	163	75	6	10	10		X	DRUMMOND	
	515798	15.0	N	3.0	E	12	NE	SE	SE	EXEMPT	WP	D	10/13/1986	200	30	6	10			X	ELIJAH	
	551774	15.0	N	3.0	E	12	NE	SE	SE	EXEMPT	WP	D	10/5/1995	150	30	6	15	35		X	JACQUELINE	
	553822	15.0	N	3.0	E	12	NE	SE	SE	EXEMPT	WP	D	4/21/1996	225	80	7		35	0	X	ENGEBRETSON, FRED,	
	563632	15.0	N	3.0	E	12	NE	SE	SE	EXEMPT	WP	D	7/30/1997	210	64	6				X	BALLARD, CHARLES,R	
	646048	15.0	N	3.0	E	12	NW	NE		EXEMPT	WP	D,IRR	3/14/1968	105	20	6	30	30	0		KALLSEN,K C	
	525118	15.0	N	3.0	E	12	NW	NE	NE	EXEMPT	WP	D	7/16/1989	200	40	6	15	15		X	JUNG, NORMAN,	
	645342	15.0	N	3.0	E	12	NW	NE	NE	EXEMPT	WP	D	9/10/1977	165	40	6	20	20	0		MCANALLY,W	
	649726	15.0	N	3.0	E	12	NW	NE	NE	EXEMPT	WP	D,IRR	12/10/1967	200	45	6	30	30	0		JOHNSON,W W	
	650124	15.0	N	3.0	E	12	NW	NE	NE	EXEMPT	WP	D	7/26/1974	138	35	6	18	18	0		CONWAY, EDNA,L	
	510722	15.0	N	3.0	E	12	NW	NE	NE	EXEMPT	WP	D	1/19/1985	160	41	6	15	15		X	MEACHAM,B	Y
	519385	15.0	N	3.0	E	12	NW	NE	NE	EXEMPT	WP	D	11/7/1987	175	34	6	20	20		X	BURRESS	
	524399	15.0	N	3.0	E	12	NW	NE	NE	EXEMPT	WP	D	5/29/1989	200	60	6	15	15		X	CIENEGA	
	592506	15.0	N	3.0	E	12	NW	NE	NE	EXEMPT	WP	D		203	60	6				X	PETERSON	
	524339	15.0	N	3.0	E	12	NW	NE	NW	EXEMPT	WP	D	4/28/1989	150	41	6	20	20	0	X	RENCH	
	537492	15.0	N	3.0	E	12	NW	NE	NW	EXEMPT	WP	D	12/23/1992	150	35	6	15		10	X	LEWIS, GLENN,	
	801622	15.0	N	3.0	E	12	NW	NE	NW	EXEMPT	WP	D		150	35	6	35	35	0		HAGAN, THOMAS,	
	802384	15.0	N	3.0	E	12	NW	NE	NW	EXEMPT	WP	D	1/1/1966	110	20	6	12	12	0		JUNG,N O	
	502909	15.0	N	3.0	E	12	NW	NE	NW	EXEMPT	WP	IRR,D	7/27/1982	255	28	8	30	30	0	X	ROBY	
	527517	15.0	N	3.0	E	12	NW	NE	NW	EXEMPT	WP	D	3/20/1990	200	40	6	35	32		X	PIPER	
	647584	15.0	N	3.0	E	12	NW	NE	SW	EXEMPT	WP	D	5/6/1974	150	105	6	25	25	0		MATHE	
	647588	15.0	N	3.0	E	12	NW	NE	SW	EXEMPT	WP	D		155	21	6	20	20	0		PEARSON,J W	
	649281	15.0	N	3.0	E	12	NW	NE	SW	EXEMPT	WP	D	10/6/1974	145	21	6	10	10	0		EMMETT, G. MICHEAL,&	
	802669	15.0	N	3.0	E	12	NW	NE	SW	EXEMPT	WP	IRR,D									JACKSON	
	515323	15.0	N	3.0	E	12	NW	NE	SW	EXEMPT	WP	D	8/31/1986	185	30	6	30	30		X	CAMPBELL, EVERETT,L	
	517551	15.0	N	3.0	E	12	NW	NE	SW	EXEMPT	WP	D	4/23/1987	160	28	6	25	25		X	OHLER-ROMINES	
	650063	15.0	N	3.0	E	12	NW	NE	SW	EXEMPT	WP	D	3/1/1978	155	21	6	12	12	0		ROBBINS,H E	

Source: ADWR 55- Well Registry, 2005

APPENDIX A
ADWR WELL INVENTORY

Map ID	ADWR Reg.	T		R		Sect	Acre160	Acre 40	Acre 10	Well Type	Well Use	Water Use	Date	Depth	WL	Width	Pump Rate	Test Rate	DD	Drill Log	Owner	Cancel
	205574	15.0	N	3.0	E	12	NW	NE	SW	EXEMPT	WP	D									CATALANO	
	623315	15.0	N	3.0	E	12	NW	NE	SE	EXEMPT	WP	D	6/8/1976	167	35	6	12	12	0		KLECK,E L	
	645763	15.0	N	3.0	E	12	NW	SE		EXEMPT	WP	D	6/10/1967	84	12	6	13	13	0		FAIR,D A	
	506386	15.0	N	3.0	E	12	NW	SE	NE	EXEMPT	WP	D	9/9/1983	150	41		15	15		X	BURNER	
	506537	15.0	N	3.0	E	12	NW	SE	NE	EXEMPT	WP	D	9/15/1983	155	41	6	20	20		X	MOORE,E A	
	520877	15.0	N	3.0	E	12	NW	SE	NE	EXEMPT	WP	D	4/25/1988	160	30	6	15	13		X	WEST, GARY,	
	516292	15.0	N	3.0	E	12	NW	SE	NW	EXEMPT	WP	IRR	1/22/1987	100	11	8	95			X	SMITH, ROBERT & FAYE,A	
	651492	15.0	N	3.0	E	12	NW	SE	SE	EXEMPT	WP	D	10/19/1979	150	38	6	15				GLENDENING, GARY D,	
	523373	15.0	N	3.0	E	12	NW	SE	SE	EXEMPT	WP	D	8/2/1989	200	38	6				X	HOAGLAND	
	208847	15.0	N	3.0	E	12	NW	SE	SE	EXEMPT	WP	D									ALEXANDER	
	553340	15.0	N	3.0	E	12	NW	SE	SE	EXEMPT	WP	D	1/10/1996	120	15	6	25	25		X	OSBORNE, KELLY,C	
	622909	15.0	N	3.0	E	12	SW	NE		EXEMPT	WP		4/1/1959	15	11						GIBBONS,W H	
14	606409	15.0	N	3.0	E	12	SW	NE		NON-EXEMPT	WP	D	12/8/1977	160	145	6	20	20	0		KINNEBREW,J K	
15	606408	15.0	N	3.0	E	12	SW	NE		NON-EXEMPT	WP	IRR	4/12/1979	50	52	8					KINNEBREW,J K	
16	622908	15.0	N	3.0	E	12	SW	NE		NON-EXEMPT	WP	IRR,S	1/1/1969	50	11	14	125	125	0		GIBBONS,W H	
	622910	15.0	N	3.0	E	12	SW	NE		EXEMPT	WP	D,IRR,S	1/1/1963	105	20	6	35	35	0		GIBBONS,W H	
	518876	15.0	N	3.0	E	12	SW	NE	NE	EXEMPT	WP	D	8/27/1987	230	60	6				X	BELLISIME, LAWRENCE,	
17	808429	15.0	N	3.0	E	12	SW	NE	NE	NON-EXEMPT	WP	IRR		48		11					HUDGINS	
	808430	15.0	N	3.0	E	12	SW	NE	NE	EXEMPT	WP	D		128		7					HUDGINS	
	519075	15.0	N	3.0	E	12	SW	NE	SE	EXEMPT	WP	D	6/24/1988	200	35	8				X	SORENSEN, MARK,	
	563818	15.0	N	3.0	E	12	SW	SE	NE	EXEMPT	WP	D									SOUTH, DEREK,T	
	606903	15.0	N	3.0	E	12	SW	SE	NW	EXEMPT	WP	D	1/25/1978	135	36	6	30	30	0		MCELLHENNEY, CLAIR,	
18	513042	15.0	N	3.0	E	12	SW	SE	SW	NON-EXEMPT	WP	MUN	3/13/1995	1300	122	10	75	60		X	CITY OF COTTONWOOD	
	520064	15.0	N	3.0	E	12	SW	SE	SW	NON-EXEMPT	WP	UTIL	3/13/1995	1300	122	10	75	60		X	CORDES LAKES WATER,	Y
	515279	15.0	N	3.0	E	12	SW	SE	SE	EXEMPT	WP	D	2/9/1987	150	62	6	15	15		X	HOWELL, BRIEN,P	
19	803399	15.0	N	3.0	E	12	SE	NE		NON-EXEMPT	WP	IRR,D,S	18840903			6	35				HOUCK	
20	803400	15.0	N	3.0	E	12	SE	NE		NON-EXEMPT	WP	IRR,D,S	1/1/1959	300		10	300				HOUCK	
21	803401	15.0	N	3.0	E	12	SE	NE		NON-EXEMPT	WP	IRR,D,S	1/1/1959	150							TOREL, RONALD,M	
22	803402	15.0	N	3.0	E	12	SE	NE		NON-EXEMPT	WP	IRR,D,S	1/1/1959	200		9	200				TOREL, RONALD,M	
23	803403	15.0	N	3.0	E	12	SE	NE		NON-EXEMPT	WP	IRR,D,S	18840903			6	35				TOREL, RONALD,M	
	648921	15.0	N	3.0	E	12	SE	NW		EXEMPT	WP	IRR,D	6/1/1972	142	12	6	30	30	0		CORF,G W	
24	606078	15.0	N	3.0	E	12	SE	NW		NON-EXEMPT	WP	IRR,S	1/1/1978	55	12	10	60	60	0		BELLISIME, LAWRENCE,F	
	606079	15.0	N	3.0	E	12	SE	NW		EXEMPT	WP	D,S									CARROLL, TERRANCE,M	
25	618899	15.0	N	3.0	E	12	SE	NW		NON-EXEMPT	WP	IRR		150		12					MAJCHRZAK	
	618900	15.0	N	3.0	E	12	SE	NW		EXEMPT	WP	D		35	15	3					MAJCHRZAK	
26	623498	15.0	N	3.0	E	12	SE	NW		NON-EXEMPT	WP	IRR	1/1/1974								REEVES, R. ERIC,	
	623499	15.0	N	3.0	E	12	SE	NW		EXEMPT	WP	D	1/1/1974								GUINN,H W	
	623501	15.0	N	3.0	E	12	SE	NW		EXEMPT	WP	D	11/1/1945	15	12						GUINN,H W	
	802798	15.0	N	3.0	E	12	SE	NW		EXEMPT	WP	D				6					MACFARLAND,H E	
	623500	15.0	N	3.0	E	12	SE	NW		EXEMPT	WP	D	1/1/1974								REEVES, R. ERIC,	
	618901	15.0	N	3.0	E	12	SE	NW		EXEMPT	WP	D,IRR		60		6					MAJCHRZAK	
	508261	15.0	N	3.0	E	12	SE	NW	NE	EXEMPT	WP	D	6/6/1984	155	45	6				X	STEWART,B	
	562402	15.0	N	3.0	E	12	SE	NW	NE	EXEMPT	WP	D	5/27/1997	260	48	6	20	166	0	X	LAMB, JERRY,	
	505583	15.0	N	3.0	E	12	SE	NW	NW	EXEMPT	WP	D	6/23/1983	95	10	6	8	8		X	LINDA & LARRY INVESTMENTS	
27	618514	15.0	N	3.0	E	12	SE	NW	NW	NON-EXEMPT	WP	S	1/1/1973	50	15	10	100	100	0		ALVEY,M E	
	620420	15.0	N	3.0	E	12	SE	NW	NW	EXEMPT	WP	IRR,D	1/1/1976	100	21	7	15	15	0		GLASS, DAVID,L	
	620421	15.0	N	3.0	E	12	SE	NW	NW	EXEMPT	WP	IRR,D	1/1/1977	12	9	8	15	15	0		REDDITT,J D	
	647637	15.0	N	3.0	E	12	SE	NW	NW	EXEMPT	WP	IRR,S,D	1/1/1969	140	20	6	10	10	0		ALVEY,M E	
	513965	15.0	N	3.0	E	12	SE	NW	NW	EXEMPT	WP	D	5/24/1986	151	27	6	20	20		X	GONZALEZ, ANTHONY,S	
	520437	15.0	N	3.0	E	12	SE	NW	SE	EXEMPT	WP	D	3/17/1988	90	28	6	15	15		X	SCHMIDT, STEVE,	
	521078	15.0	N	3.0	E	12	SE	NW	SE	EXEMPT	WP	D									PETERSON, GARY,	Y
	545736	15.0	N	3.0	E	12	SE	SW	NE	EXEMPT	WP	D									TINNIN, BILLY,D	Y
	516439	15.0	N	3.0	E	12	SE	SW	NE	EXEMPT	ABAN	NONE	1/24/1987	110	15	6				X	BLUM	Y
	601634	15.0	N	3.0	E	12	SE	SW	NE	EXEMPT	WP	D	9/15/1977	250		6	35				LUYTIES, HENRY,E	
28	511995	15.0	N	3.0	E	12	SE	SW	NW	NON-EXEMPT	WP	D	8/13/1981	111	17	6	15	15		X	BELL,G H	

Source: ADWR 55- Well Registry, 2005

APPENDIX A
ADWR WELL INVENTORY

Map ID	ADWR Reg.	T		R		Sect	Acre160	Acre 40	Acre 10	Well Type	Well Use	Water Use	Date	Depth	WL	Width	Pump Rate	Test Rate	DD	Drill Log	Owner	Cancel
	650480	15.0	N	3.0	E	12	SE	SW	NW	EXEMPT	WP	IRR	1/1/1952	150	80	6					DUSTMAN,H U	
	512204	15.0	N	3.0	E	12	SE	SW	NW	EXEMPT	WP	D	8/30/1985	111	17	6	15	15		X	YOUNG, MARK,A	
	802383	15.0	N	3.0	E	12	SE	SW	NW	EXEMPT	WP	IRR,D	8/13/1981	111	89	6	15	15	0		BELL ET AL,G H	
	637524	15.0	N	3.0	E	12	SE	SW	SW	EXEMPT	WP	D	10/20/1997	250	55	6	16	16		X	BRENNAN	
	635081	15.0	N	3.0	E	12	SE	SW	SE	EXEMPT	WP	IRR		200		6	25				IPPOLITO,R	
	516330	15.0	N	3.0	E	12	SE	SE	SE	EXEMPT	WP	D	1/14/1987	150	20	8				X	HEATH, NORMAN,D	
	643072	15.0	N	3.0	E	13	NE	NE	SW	EXEMPT	WP	D	3/9/1976	200	67	6	20	20	0		CARRIGAN	
29	555256	15.0	N	3.0	E	13	NE	NE	SE	NON-EXEMPT	WP	MUN	5/20/1996	900	150	16				X	CORDES LAKES WTR CO,	
30	609337	15.0	N	3.0	E	13	NE	NW	SW	NON-EXEMPT	WP	D,MUN	4/30/1996	1270	150	10	55	55	0	X	CITY OF COTTONWOOD	
	557612	15.0	N	3.0	E	13	NE	NW	SW	NON-EXEMPT	MON	MUN									CORDES LAKES WATER,	Y
	521001	15.0	N	3.0	E	13	NE	SE	SE	EXEMPT	WP	D	5/5/1988	220	68	6				X	MARTINSON	
31	609338	15.0	N	3.0	E	13	NE	SE	SE	NON-EXEMPT	WP	D,MUN	7/1/1970	300	90	8	50				CITY OF COTTONWOOD	
32	523588	15.0	N	3.0	E	13	NE	SE	SE	NON-EXEMPT	WP	D	9/6/1989	795	110	8	60	60		X	FOLKMAN, NEIL,	
	086921	15.0	N	3.0	E	13	NW	NE	SW	EXEMPT	WP	D	1/1/1981	161	25	6					VIERTHALER,C	
33	555560	15.0	N	3.0	E	13	NW	SE	SE	NON-EXEMPT	WP	MUN									CITY OF COTTONWOOD	
	512655	15.0	N	3.0	E	13	SW	NE	NW	EXEMPT	WP	D									BLOOM, BEALLY,L	Y
	508042	15.0	N	3.0	E	13	SW	NE	SW	EXEMPT	WP	D	5/17/1984	279	183	6	15	15		X	OLSON,M	
34	609340	15.0	N	3.0	E	13	SW	SE	NW	NON-EXEMPT	WP	D,MUN	7/6/1970	502	235	8	150				CITY OF COTTONWOOD	
35	627402	15.0	N	3.0	E	13	SE			NON-EXEMPT	WP	D	11/3/1976	268	135	6	18	18	0		MULVANEY	
	602393	15.0	N	3.0	E	13	SE	NE	NE	EXEMPT	WP	D	2/14/1980	135		6	11	11	0		SOSSA, ROBERT,	
	630106	15.0	N	3.0	E	13	SE	NE	NE	EXEMPT	WP	D	9/8/1978	270	130	6	20	20	0		KNUTSON,I R	
	630008	15.0	N	3.0	E	13	SE	NW	NE	EXEMPT	WP	D	11/1/1980	155	65	6	35	35	0	X	PONCE	
36	805185	15.0	N	3.0	E	13	SE	NW	NW	NON-EXEMPT	WP	D	7/31/1976	335	260	6					ANDERSON, MARY L.,	
37	500663	15.0	N	3.0	E	13	SE	SW	SE	NON-EXEMPT	WP	MUN	3/28/1995	1120	223	10	50	50		X	CITY OF COTTONWOOD	
38	609341	15.0	N	3.0	E	13	SE	SW	SE	NON-EXEMPT	WP	D	7/3/1981	650	218	14	50				CORDES LAKES WATER,	
	506065	15.0	N	3.0	E	13	SE	SE	SE	EXEMPT	WP	D	8/3/1983	260	180	6	15	15		X	MILES	
	521470	15.0	N	3.0	E	13	SE	SE	SE	EXEMPT	WP	D	6/30/1988	275	155	6	15	15		X	LEE & SHAW	
	524086	15.0	N	4.0	E	1	NE	NE	SW	EXEMPT	WP	D	6/12/1989	300	230	6	7	5		X	BARJAS, DONALD,	
	531752	15.0	N	4.0	E	1	NE	NW	NW	EXEMPT	WP	D	6/3/1991	315	200	6				X	VANHEININGEN & EDWARDSON	
39	802970	15.0	N	4.0	E	1	NE	NW	SW	NON-EXEMPT	WP	IRR,S,D		425	230	10	6	6	0		RINDONE, DAVID,L	
	587569	15.0	N	4.0	E	1	NE	SW	SW	EXEMPT	WP	D		300	230	5				X	HAMILTON	
	598928	15.0	N	4.0	E	1	NE	SE	NW	EXEMPT	WP	D	9/16/2003	350	250	6				X	COLEMAN	
	527292	15.0	N	4.0	E	1	NE	SE	SW	EXEMPT	WP	D	4/4/1990	298	273	6	15	15		X	ALLEN, RAY,	
	645664	15.0	N	4.0	E	1	NW	NE	NE	EXEMPT	WP	D,IRR				6					MAC DOUGAL,N	
	570686	15.0	N	4.0	E	1	NW	NE	NE	EXEMPT	WP	D	1/16/1999	340	210	6				X	SMITH	
	642402	15.0	N	4.0	E	1	NW	NE	NW	EXEMPT	WP	D,IRR		258	221	8	10	10	0		SCHLICK	
	565018	15.0	N	4.0	E	1	NW	NE	NW	EXEMPT	WP	D		350	233	6	12	12		X	FISHER	
	901947	15.0	N	4.0	E	1	NW	NE	NW	EXEMPT		D		560	220	6				X	SCHLICK	
	085276	15.0	N	4.0	E	1	NW	NE	SW	EXEMPT	WP	D	8/22/1980	346	260	6		20			WASHINGTON,V	
	647011	15.0	N	4.0	E	1	NW	NE	SW	EXEMPT	WP	D	8/26/1980	346	260	6					CUTBIRTH,W S	
	559256	15.0	N	4.0	E	1	NW	NE	SW	EXEMPT	WP	D	10/27/1996	335	260	6	18	18		X	GOLOSEWSKI	
	550592	15.0	N	4.0	E	1	NW	NE	SE	EXEMPT	WP	D	8/17/1995	435	230	4	10	10		X	SELF	
	509945	15.0	N	4.0	E	1	NW	NW	NE	EXEMPT	ABAN	NONE	12/29/1984	380						X	BROWN	
	506881	15.0	N	4.0	E	1	NW	NW	NE	EXEMPT	WP	D	12/30/1983	300	201	5				X	PARKER	
	521069	15.0	N	4.0	E	1	NW	NW	NE	EXEMPT	WP	D	6/8/1988	305	160	6				X	KNOX, JIM,	
	528464	15.0	N	4.0	E	1	NW	NW	NE	EXEMPT	WP	D	7/9/1990	305	203	6	20	20		X	ZATKALIK, THOMAS,	
	569870	15.0	N	4.0	E	1	NW	NW	NE	EXEMPT	WP	D	10/15/1998	400	225	6				X	PETERMEIER	
	505246	15.0	N	4.0	E	1	NW	NW	NW	EXEMPT	WP	D	4/15/1983	370	210	5	15	15		X	LOFFLAND, REGINA,F	
	527663	15.0	N	4.0	E	1	NW	NW	NW	EXEMPT	WP	D	4/12/1990	280	210	6	10	10		X	O'FARRILL, SUSAN,	
	900653	15.0	N	4.0	E	1	NW	NW	NW	EXEMPT		D									WOLF	
	522089	15.0	N	4.0	E	1	NW	NW	SW	EXEMPT	WP	D	10/7/1988	298	180	6	12	12		X	SURPLUS, DOUGLAS,A	
	555896	15.0	N	4.0	E	1	NW	NW	SW	EXEMPT	WP	D	5/14/1996	380	190	6	10	10		X	0	
	509763	15.0	N	4.0	E	1	NW	NW	SW	EXEMPT	WP	D	11/27/1984	305	180	5	10	10		X	JENKINS, JAY,G	
	577180	15.0	N	4.0	E	1	NW	NW	SW	EXEMPT	WP	D	10/20/1999	350	220	5	15	15		X	PAINTER	
	597410	15.0	N	4.0	E	1	NW	NW	SW	EXEMPT	WP	D									BARNES	Y

Source: ADWR 55- Well Registry, 2005

APPENDIX A
ADWR WELL INVENTORY

Map ID	ADWR Reg.	T		R		Sect	Acre160	Acre 40	Acre 10	Well Type	Well Use	Water Use	Date	Depth	WL	Width	Pump Rate	Test Rate	DD	Drill Log	Owner	Cancel
	591580	15.0	N	4.0	E	1	NW	NW	SE	EXEMPT	WP	D	11/21/2002	400	227	5	15	15		X	MITCHELL	
	540239	15.0	N	4.0	E	1	NW	SW	SW	EXEMPT	WP	D	11/29/1993	295	230	6	12	13		X	ARNETT, ERIC,	
	588078	15.0	N	4.0	E	1	NW	SW	SW	EXEMPT	WP	D					12	12			ARNETT	N
	527275	15.0	N	4.0	E	1	NW	SE	NE	EXEMPT	WP	D									LINDNER, CURTIS,	Y
	527472	15.0	N	4.0	E	1	NW	SE	NE	EXEMPT	WP	D									NAUTA, CARL,	Y
	531774	15.0	N	4.0	E	1	NW	SE	NE	EXEMPT	WP	D	9/6/1991	321	280	6	20	15		X	REYNOLDS, KAREN,	
	560966	15.0	N	4.0	E	1	NW	SE	NE	EXEMPT	WP	D	2/13/1997	358	255	6	10	10		X	JOBE	
	597969	15.0	N	4.0	E	1	NW	SE	NE	EXEMPT	WP	D,S		353	184	6				X	MITCHELL	
	527276	15.0	N	4.0	E	1	NW	SE	NW	EXEMPT	WP	D									LINDNER, CURTIS,	Y
	547982	15.0	N	4.0	E	1	NW	SE	NW	EXEMPT	WP	D	4/1/1995	300	260	6				X	GEISBUSCH, JR., WALT,E R	
	543545	15.0	N	4.0	E	1	NW	SE	NW	EXEMPT	WP	D,IRR	5/7/1994	300	260	6	9	9	0	X	FREEDMAN	
	586466	15.0	N	4.0	E	1	NW	SE	SW	EXEMPT	WP	D		400	253	5				X	JOHNSON	
	550628	15.0	N	4.0	E	1	NW	SE	SE	EXEMPT	WP	D	8/5/1995	317	270	6				X	PAINTER, WILLIAM,	
	581605	15.0	N	4.0	E	1	NW	SE	SE	EXEMPT	WP	D	6/21/2000	370	300	6				X	LANDMARK RESEARCH INC	
	586800	15.0	N	4.0	E	1	NW	SE	SE	EXEMPT	WP	D					3				WILCOX	N
	511047	15.0	N	4.0	E	1	SW	NW	NW	EXEMPT	WP	D	7/25/1985	320	185	5				X	KENNEY, DAVID,B	
	561250	15.0	N	4.0	E	1	SW	SW	NE	EXEMPT	WP	D	4/7/1997	290	98	6				X	GUDAT	
	627338	15.0	N	4.0	E	1	SE	SW	SW	EXEMPT	WP	S	11/13/1974	937	206	10	10	10	0		COCONINO NATL FOREST,	
	524087	15.0	N	4.0	E	1	SE	SE	NW	EXEMPT	WP	D									MOSLANDER, DELBERT,	Y
40	606611	15.0	N	4.0	E	2				NON-EXEMPT	WP	D									BOGART,D	
	648692	15.0	N	4.0	E	2				EXEMPT	WP	D	9/12/1972	224		6					ZAHNTER,K G	
	802319	15.0	N	4.0	E	2				EXEMPT	WP	D,IRR	7/7/1972	140		6	18				CROSBY	
	645645	15.0	N	4.0	E	2				EXEMPT	WP	D	1/1/1970	190	145						DEL VILLAR,M	
	504857	15.0	N	4.0	E	2	NE	NW	NW	EXEMPT	WP	D	4/2/1983	240	121	8	10	10		X	LONG,E O	
	622582	15.0	N	4.0	E	2	NE	NW	NW	EXEMPT	WP	D									LONG,E O	
	086266	15.0	N	4.0	E	2	NE	SW	NE	EXEMPT	WP	D	3/1/1981	222		6					ANDERSON,A	
	501535	15.0	N	4.0	E	2	NE	SE	NE	EXEMPT	WP	D	12/3/1981	119	41	6				X	CAMPBELL	
	630564	15.0	N	4.0	E	2	NW			EXEMPT	WP	D	2/14/1972	395	43	6	30	30	0		NEWTON,J A	
	643989	15.0	N	4.0	E	2	NW			EXEMPT	WP	IRR,D	8/6/1969	305	65	8	20	20	0		TISSAW,J A	
	649983	15.0	N	4.0	E	2	NW			EXEMPT	WP	IRR,S,D	3/1/1972	160	90	6	15	15	0		HUGHES,Q M	
	802546	15.0	N	4.0	E	2	NW			EXEMPT	WP	D,S									PHILLIPS,R	
	648799	15.0	N	4.0	E	2	NW	NE		EXEMPT	WP	D	3/20/1975	240	80	7	25	25	0		MORGAN,H P	
	800461	15.0	N	4.0	E	2	NW	NE		EXEMPT	WP	D	1/1/1974	230	80	6	35	35	0		MORGAN,H P	
	509908	15.0	N	4.0	E	2	NW	NE	NE	EXEMPT	WP	D	12/30/1985	266	120	6	10	10		X	LEE, WOOD	
	531777	15.0	N	4.0	E	2	NW	NE	NE	EXEMPT	WP	D	6/12/1991	220	150	6	20	20	0		CHILDERS, MARTHA ETL,E	
	630536	15.0	N	4.0	E	2	NW	NE	NE	EXEMPT	WP	D	3/6/1975	196		6	7	7	0		PARKER,H A	
	647716	15.0	N	4.0	E	2	NW	NE	NE	EXEMPT	WP	D		250	158	6	30	30	0		GARCIA,B	
	650293	15.0	N	4.0	E	2	NW	NE	NE	EXEMPT	WP	D		230		6					DAY,M J	
	515430	15.0	N	4.0	E	2	NW	NE	NE	EXEMPT	WP	D	12/20/1986	305	195	6				X	SANNER, ELAINE,	
	522495	15.0	N	4.0	E	2	NW	NE	NE	EXEMPT	WP	D	10/24/1988	210	116	6	10	10	0	X	FORD, RICHARD,	
	532453	15.0	N	4.0	E	2	NW	NE	NE	EXEMPT	WP	D	9/9/1991	242	175	6				X	LATTIMORE, DEBORAH,	
	630537	15.0	N	4.0	E	2	NW	NE	NE	EXEMPT	WP	D	3/11/1961	123		6	7	7	0		PARKER,H A	
	808589	15.0	N	4.0	E	2	NW	NE	NE	EXEMPT	WP	D	1/1/1972								HUNTER	
	087685	15.0	N	4.0	E	2	NW	NE	NW	EXEMPT	WP	D	1/1/1981	279	105	6		10	0		CAIRNS,T L	
	503282	15.0	N	4.0	E	2	NW	NE	NW	EXEMPT	WP	D									SALLEE,J M	Y
	642423	15.0	N	4.0	E	2	NW	NE	NW	EXEMPT	WP	D	1/1/1980	328		6	35	35	0		PRICE,J E	
	648148	15.0	N	4.0	E	2	NW	NE	NW	EXEMPT	WP	D	6/24/1977	172	96	6	20	20	0		SALLE,J M	
	650191	15.0	N	4.0	E	2	NW	NE	NW	EXEMPT	WP	D	6/1/1979	200	75	6	10	10	0		ROGER	
	511023	15.0	N	4.0	E	2	NW	NE	NW	EXEMPT	WP	D	5/8/1985	245	135	6	15	15		X	BUDD	
	503417	15.0	N	4.0	E	2	NW	NE	SW	EXEMPT	WP	D	7/10/1982	210	121	6	15	15	0	X	RIDDLE	
	643155	15.0	N	4.0	E	2	NW	NE	SW	EXEMPT	WP	D	11/1/1980	200	90	6	20	20	0		STAACK	
	648864	15.0	N	4.0	E	2	NW	NE	SW	EXEMPT	WP	D	3/23/1966	175	90	6	35	35	0		GRIEGO,S C	
	802796	15.0	N	4.0	E	2	NW	NE	SW	EXEMPT	WP	D	6/2/1978	172	85	6	30	30	0		KNIGHT,W E	
	902438	15.0	N	4.0	E	2	NW	NE	SW	EXEMPT		D		240	150	6				X	PHILLIPS	
	504873	15.0	N	4.0	E	2	NW	NE	SE	EXEMPT	WP	D	3/22/1983	230	125	6	12	12	0	X	BOOTH,C L	

Source: ADWR 55- Well Registry, 2005

APPENDIX A
ADWR WELL INVENTORY

Map ID	ADWR Reg.	T		R		Sect	Acre160	Acre 40	Acre 10	Well Type	Well Use	Water Use	Date	Depth	WL	Width	Pump Rate	Test Rate	DD	Drill Log	Owner	Cancel
	513356	15.0	N	4.0	E	2	NW	NE	SE	EXEMPT	WP	D	7/25/1986	190	180	6	10	10		X	ROSSITER	
	527570	15.0	N	4.0	E	2	NW	NE	SE	EXEMPT	WP	D	4/21/1990	185	125	6	10	7		X	AZRE HOLDINGS LLC	
	568025	15.0	N	4.0	E	2	NW	NE	SE	EXEMPT	WP	D	4/1/1999	200	110	6	35	15		X	FANCHER	
	631611	15.0	N	4.0	E	2	NW	NW	NE	EXEMPT	WP	D		210	60	6	15	15	0		BARNGROVER,J O	
	630163	15.0	N	4.0	E	2	NW	NW	NE	EXEMPT	WP	D	12/15/1979	208	131	6	15	15	0		EDWARDS	
	569508	15.0	N	4.0	E	2	NW	NW	NE	EXEMPT	WP	D	9/15/1998	202	120	6	20	20		X	CRAVENS	
	086899	15.0	N	4.0	E	2	NW	NW	NW	EXEMPT	WP	D	2/11/1981	146	135	6	20	20			SNIDER	
	648830	15.0	N	4.0	E	2	NW	NW	NW	EXEMPT	WP	D	1/1/1966	534	105						HEATH, MONTE,W	
	532582	15.0	N	4.0	E	2	NW	NW	SW	EXEMPT	WP	D	9/1/1991	220	145	6				X	RUCKER	
	902834	15.0	N	4.0	E	2	NW	NW	SW	EXEMPT		D									VISTA PROPERTY MGMT. SVC.	
	597761	15.0	N	4.0	E	2	NW	NW	SW	EXEMPT	WP	D		160	60					X	BROCK	
	201315	15.0	N	4.0	E	2	NW	NW	SW	EXEMPT	WP	D		206	96	6				X	RHODES	
	601751	15.0	N	4.0	E	2	NW	NW	SE	EXEMPT	WP	D		140	90	6	20	20	0		TAYLOR	
	643128	15.0	N	4.0	E	2	NW	NW	SE	EXEMPT	WP	D	12/7/1971	225	220	6	7	7	0		GRONDIN	
	648800	15.0	N	4.0	E	2	NW	NW	SE	EXEMPT	WP	D									ROSSITER, RONALD,R	
	648841	15.0	N	4.0	E	2	NW	NW	SE	EXEMPT	WP	D	1/1/1967	167	85	6					STONE, RHONDA,R	
	601760	15.0	N	4.0	E	2	NW	NW	SE	EXEMPT	WP	D		163	90	6	20	20	0		WHITE,N S	
	603046	15.0	N	4.0	E	2	NW	SW		EXEMPT	WP	D		115	85	6	12	12	0		SELLECK	
	630779	15.0	N	4.0	E	2	NW	SW		EXEMPT	WP	D	1/1/1963	118	80	6	7	7	0		VICK,R D	
	648954	15.0	N	4.0	E	2	NW	SW		EXEMPT	WP	D	1/24/1974	262	90	8	30	30	0		BIRD,E H	
	800905	15.0	N	4.0	E	2	NW	SW		EXEMPT	WP	D				6					POOLE,L M	
	649693	15.0	N	4.0	E	2	NW	SW		EXEMPT	WP	D	9/10/1964	195	90	6	12	12	0		CUNNINGHAM,A E	
	646516	15.0	N	4.0	E	2	NW	SW		EXEMPT	WP	D		150	75	6	10	10	0		WEST,E I	
	651432	15.0	N	4.0	E	2	NW	SW	NE	EXEMPT	WP	D		120	80	5	15	15	0		COMMERCE 89 DEVELOPMENT L	
	650281	15.0	N	4.0	E	2	NW	SW	NW	EXEMPT	WP	IRR,D,S	1/1/1964	145		6	55	55	0		HEIDERICK	
	501890	15.0	N	4.0	E	2	NW	SW	NW	EXEMPT	WP	D	3/1/1982	178	90	8	15	15		X	WARREN	
	603095	15.0	N	4.0	E	2	NW	SW	SW	EXEMPT	WP	D	4/7/1980	150	41	6	25	25	0		NIETO,E J	
	643320	15.0	N	4.0	E	2	NW	SW	SW	EXEMPT	WP	D		130		6					TAYLOR,E N	
	647925	15.0	N	4.0	E	2	NW	SW	SW	EXEMPT	WP	D	1/1/1946	150		8					RHODES,T P	
	522970	15.0	N	4.0	E	2	NW	SW	SW	EXEMPT	WP	D	1/22/1989	300	180	6				X	MOORE, EVERETT JR.,	
	648833	15.0	N	4.0	E	2	NW	SW	SW	EXEMPT	WP	D	1/1/1968	128	65	6	5	5	0		REYNOLDS,K A	
	648146	15.0	N	4.0	E	2	NW	SW	SW	EXEMPT	WP	D	1/1/1968	128	84	6	5	5	0		REYNOLDS,H R	
	808155	15.0	N	4.0	E	2	NW	SW	SW	EXEMPT	WP	D	1/1/1973	102		6					CRANE	
	802737	15.0	N	4.0	E	2	NW	SW	SE	EXEMPT	WP	D	1/1/1977	170		6					MINEER	
	642572	15.0	N	4.0	E	2	NW	SW	SE	EXEMPT	WP	IRR,D	1/1/1964	146	70	6	10	10	0		COLE,W F	
	644634	15.0	N	4.0	E	2	NW	SW	SE	EXEMPT	WP	D	5/4/1965	165	110	6	7	7	0		CURRENCE,R B	
	509180	15.0	N	4.0	E	2	NW	SW	SE	EXEMPT	WP	D	11/15/1984	147	75	6	10	10		X	PIPPIN,T R	
	650151	15.0	N	4.0	E	2	SW			EXEMPT	WP	D					6	6	0		KOLESSAR, JAMES,J	
	505099	15.0	N	4.0	E	2	SW	NW		EXEMPT	WP	D	5/10/1983	204	110	8	15	15		X	SMITH, BETTH,L	
	647823	15.0	N	4.0	E	2	SW	NW		EXEMPT	WP	D		100	60	8	10	10	0		CLINE,J W	
41	802366	15.0	N	4.0	E	2	SW	NW		NON-EXEMPT	WP	D	8/31/1984	130	100	8	15	15	0		PARKER,B R	
	524973	15.0	N	4.0	E	2	SW	NW	NE	EXEMPT	WP	D	6/24/1989	180	88	6	10	7		X	LINDLEY	
	553053	15.0	N	4.0	E	2	SW	NW	NE	EXEMPT	WP	D,IRR	1/31/1996	160	83	6	10	10		X	BREWER, PEGGY,	
	555301	15.0	N	4.0	E	2	SW	NW	NE	EXEMPT	WP	D	3/11/1996	130	65	6				X	VINCENT	
	644807	15.0	N	4.0	E	2	SW	NW	NE	EXEMPT	WP	D					30				BURRUS,H	
	802318	15.0	N	4.0	E	2	SW	NW	NE	EXEMPT	WP	D,IRR	7/7/1972	128		6	18	18	0		BRYSON,J P	
	512551	15.0	N	4.0	E	2	SW	NW	NW	EXEMPT	WP	D	10/26/1985	153	51	6				X	RHODES, BUDDY,	
	629340	15.0	N	4.0	E	2	SW	NW	NW	EXEMPT	WP	D	6/10/1977	185	63	6	20	20	0		KENCHELOE,E C	
	542322	15.0	N	4.0	E	2	SW	NW	NW	EXEMPT	WP	D	6/2/1994	150	60	6	15	15		X	GOLDMAN	
	501891	15.0	N	4.0	E	2	SW	NW	SW	EXEMPT	WP	D	3/1/1982	90	20	6	20	20	0	X	OURSLAND, JEFFREY,A	
	508718	15.0	N	4.0	E	2	SW	NW	SW	EXEMPT	WP	D	9/10/1984	210	130	6				X	WEANT	
	553099	15.0	N	4.0	E	2	SW	NW	SW	EXEMPT	WP	D	2/23/1996	175	105	6				X	HAYWARD, DAWSON,H	
	571570	15.0	N	4.0	E	2	SW	NW	SW	EXEMPT	WP	D	5/13/1999	110	60	10				X	COZENS	
	630692	15.0	N	4.0	E	2	SW	NW	SE	EXEMPT	WP	D	1/10/1978	195	110	6	10	10	0		COZENS	
	800084	15.0	N	4.0	E	2	SW	NW	SE	EXEMPT	WP	D	1/1/1978	195	110	6	10	10	0		CORNVILLE BIBLE CHUR,	Y

Source: ADWR 55- Well Registry, 2005

APPENDIX A
ADWR WELL INVENTORY

Map ID	ADWR Reg.	T		R		Sect	Acre160	Acre 40	Acre 10	Well Type	Well Use	Water Use	Date	Depth	WL	Width	Pump Rate	Test Rate	DD	Drill Log	Owner	Cancel
	577020	15.0	N	4.0	E	2	SW	NW	SE	EXEMPT	WP	D	10/8/1999	200	125	6				X	BOYDELL	
	605684	15.0	N	4.0	E	2	SW	SW	NE	EXEMPT	WP	D		200	110	8	15	15	0		EARLS	
	631519	15.0	N	4.0	E	2	SW	SW	NE	EXEMPT	WP	D	1/1/1979	195	70	6	10	10	0		ARNETT, BRETT,W	
	644358	15.0	N	4.0	E	2	SW	SW	NE	EXEMPT	WP	D	1/1/1978	152	116	6	6	6	0		DYER	
	648147	15.0	N	4.0	E	2	SW	SW	NE	EXEMPT	WP	IRR,D		147							OLSEN	
	650292	15.0	N	4.0	E	2	SW	SW	NE	EXEMPT	WP	D		80		6	10				VARA, THOMAS,	
	802347	15.0	N	4.0	E	2	SW	SW	NE	EXEMPT	WP	IRR,D									FOWLER,O M	
	508983	15.0	N	4.0	E	2	SW	SW	NE	EXEMPT	WP	D	8/24/1984	145	80	6	8	12		X	REYNOLDS,K	
	631518	15.0	N	4.0	E	2	SW	SW	NE	EXEMPT	WP	D	1/1/1976	153	70	6	10	10	0		ARNETT, BRETT,W	
	808043	15.0	N	4.0	E	2	SW	SW	NE	EXEMPT	WP	D-	1/1/1963	150	130	6					LATIMER	
	529901	15.0	N	4.0	E	2	SW	SW	NW	EXEMPT	WP	D	2/18/1991	180	93	6	20	22		X	GRAY, KEVIN,	
	536328	15.0	N	4.0	E	2	SW	SW	NW	EXEMPT	WP	D	9/1/1992	200	85	6	12	12		X	WOLIN, MARC & GOLDIE,	
	641485	15.0	N	4.0	E	2	SW	SW	NW	EXEMPT	WP	D	1/1/1955	100							MOORE,M E	
	647631	15.0	N	4.0	E	2	SW	SW	NW	EXEMPT	WP	D		165	90	6	12	12	0		CLOSE	
	803365	15.0	N	4.0	E	2	SW	SW	NW	EXEMPT	WP	D		175	140	8	12				BROWN, J.R.,	
	519822	15.0	N	4.0	E	2	SW	SW	NW	EXEMPT	WP	D	1/15/1988	151	82	6	10	8		X	MOUNTAIN BELL,	
	648115	15.0	N	4.0	E	2	SW	SW	NW	EXEMPT	WP	D	1/1/1970	130		6					SANCHEZ,B P	
	900973	15.0	N	4.0	E	2	SW	SW	NW	EXEMPT		D		190	120	6				X	TRUMAN	
	611469	15.0	N	4.0	E	2	SW	SW	SW	EXEMPT	WP	D	1/1/1967	170	120	6					BROWER, KELLY,	
	641013	15.0	N	4.0	E	2	SW	SW	SW	EXEMPT	WP	D		60							SUND, AMY,L	
	641014	15.0	N	4.0	E	2	SW	SW	SW	EXEMPT	WP	D		240	190						SUND, AMY,L	
	644328	15.0	N	4.0	E	2	SW	SW	SW	EXEMPT	WP	D	1/1/1978	165		6					CREWS	
	647713	15.0	N	4.0	E	2	SW	SW	SW	EXEMPT	WP	D									FANCHER, LAUREN,	
	648079	15.0	N	4.0	E	2	SW	SW	SW	EXEMPT	WP	D	10/1/1968	138	70	6	10	10	0		COVEY,T	
	650075	15.0	N	4.0	E	2	SW	SW	SW	EXEMPT	WP	D,IND	1/1/1948	400							ANDERSON,L D	
	651220	15.0	N	4.0	E	2	SW	SW	SW	EXEMPT	WP	D		90	70	6					SCOTT,Z B	
	506067	15.0	N	4.0	E	2	SW	SW	SW	EXEMPT	WP	D	8/17/1983	193	103	6	10	10	0	X	SCOTT,Z	
	513215	15.0	N	4.0	E	2	SW	SW	SW	EXEMPT	WP	D	2/23/1986	185	130	8	10	10		X	CAVE, BRUCE & C,	
	805840	15.0	N	4.0	E	2	SW	SW	SW	EXEMPT	WP	D	12/31/1958	165	100	6	10				WAITE, GORDON,	
	808504	15.0	N	4.0	E	2	SW	SW	SW	EXEMPT	ABAN	D	1/1/1968								SUNSET INDUSTRIES LLC	Y
	599388	15.0	N	4.0	E	2	SW	SW	SW	EXEMPT	WP	D	9/1/2003	290	147	7				X	SUNSET INDUSTRIES LLC	
	647714	15.0	N	4.0	E	2	SW	SW	SE	EXEMPT	ABAN	D	1/1/1967	170			10	10	0		WHITE	
	647722	15.0	N	4.0	E	2	SW	SW	SE	EXEMPT	WP	D		228		6	10				NEAULT, MARY,A	
	648047	15.0	N	4.0	E	2	SW	SW	SE	EXEMPT	WP	D	5/12/1978	175	140	6	10	10	0		BARTHOLOMEW,C L	
	648116	15.0	N	4.0	E	2	SW	SW	SE	EXEMPT	WP	D	1/1/1956	130		6					SANDONAT,M R	
	648129	15.0	N	4.0	E	2	SW	SW	SE	EXEMPT	WP	D		138	120	6	10	10	0		MCKENZIE,R V	
	648130	15.0	N	4.0	E	2	SW	SW	SE	EXEMPT	WP	D		187		8					TAYLOR	
	648820	15.0	N	4.0	E	2	SW	SW	SE	EXEMPT	WP	D				6					RIDDLE,M	
	649138	15.0	N	4.0	E	2	SW	SW	SE	EXEMPT	WP	D	1/1/1974								FIRST SOUTHERN,	
	564797	15.0	N	4.0	E	2	SW	SW	SE	EXEMPT	WP	D		230	130	6				X	PRUITT	
	648046	15.0	N	4.0	E	2	SW	SW	SE	EXEMPT	WP	D	7/20/1974	220	118	6	8	8	0		BARTHOLOMEW,C L	
	578732	15.0	N	4.0	E	2	SW	SW	SE	EXEMPT	WP	D	1/11/2000	190	135	6				X	WHITE	
	643300	15.0	N	4.0	E	2	SE	NW	SE	EXEMPT	WP	D	3/20/1975	240	80	7	25	25	0		PHILLIP, PATRICIA,J	
42	610667	15.0	N	4.0	E	3				NON-EXEMPT	WP	D	12/1/1959	226		8	1	1	0		HARBISON,N F	
	641737	15.0	N	4.0	E	3				EXEMPT	WP	IRR,S,D			45	6	20	20	0		SMITH, GORDON,	
	644777	15.0	N	4.0	E	3				EXEMPT	WP	D		264	228	6					MC NABB,S A	
	646395	15.0	N	4.0	E	3				EXEMPT	WP	D		85	40	6	20	20	0		HEXTER	
	646922	15.0	N	4.0	E	3				EXEMPT	WP	D									HOLT,P E	
	647526	15.0	N	4.0	E	3				EXEMPT	WP	IRR		235		6					HART,F W	
	647527	15.0	N	4.0	E	3				EXEMPT	WP	D									HART,F W	
	649981	15.0	N	4.0	E	3				EXEMPT	WP	D	1/1/1974	90	85	6	10	10	0		MCCLOUD	
	646394	15.0	N	4.0	E	3				EXEMPT	WP	D,IRR		165	70	6	20				ROSEWEIR, INGEBORG,	
	650806	15.0	N	4.0	E	3	NE			EXEMPT	WP	D		150	90	6					STEIBLI	
	802675	15.0	N	4.0	E	3	NE			EXEMPT	WP	D	3/14/1980	150	105	6	15	15	0		THE ASHRAM OF ENLIGHTENME	
	623349	15.0	N	4.0	E	3	NE	NE	NE	EXEMPT	WP	IRR	1/1/1976	295	54	6	25	25	0		HART,G	

Source: ADWR 55- Well Registry, 2005

APPENDIX A
ADWR WELL INVENTORY

Map ID	ADWR Reg.	T		R		Sect	Acre160	Acre 40	Acre 10	Well Type	Well Use	Water Use	Date	Depth	WL	Width	Pump Rate	Test Rate	DD	Drill Log	Owner	Cancel
	631178	15.0	N	4.0	E	3	NE	NE	NE	EXEMPT	WP	D	6/4/1978	338	50	6					MARTINSEN	
	637186	15.0	N	4.0	E	3	NE	NE	NE	EXEMPT	WP	D	6/1/1977	180		6					ANDERSON	
	542081	15.0	N	4.0	E	3	NE	NE	NE	EXEMPT	WP	D	2/1/1994	148	50	6	30	30	0	X	ROTHWELL	
	605269	15.0	N	4.0	E	3	NE	NE	NW	EXEMPT	WP	D	1/1/1976	180		8					ACKERMAN	
	648829	15.0	N	4.0	E	3	NE	NE	NW	EXEMPT	WP	D	11/10/1975	240	238	6	20	20	0		BUEHRER,E	
	201373	15.0	N	4.0	E	3	NE	NE	NW	EXEMPT	WP	D	1/17/2004	145	60	6	15	15		X	TANNER	
	576781	15.0	N	4.0	E	3	NE	NE	SW	EXEMPT	WP	D	10/30/1999	225	95	6	16	16	0	X	KLECK	
	512934	15.0	N	4.0	E	3	NE	NE	SE	EXEMPT	WP	D	1/26/1986	90	48	6				X	ANDERSON, THOMAS,L	
	647284	15.0	N	4.0	E	3	NE	NW		EXEMPT	WP	D	4/1/1979	200	200	4	12	12	0		HANTZ ROBERT,	
	525431	15.0	N	4.0	E	3	NE	NW	SW	EXEMPT	WP	D	9/1/1989	456	40	6	15	24		X	FLANAGAN	
	537994	15.0	N	4.0	E	3	NE	NW	SE	EXEMPT	WP	D	2/11/1993	160	52	6				X	ROONER, CARY,	
	523217	15.0	N	4.0	E	3	NE	SW	NE	EXEMPT	WP	D									CAMPBELL, DALE,	Y
	526902	15.0	N	4.0	E	3	NE	SW	NE	EXEMPT	WP	D	2/25/1990	122	63	6				X	CAMPBELL, DALE,	
43	608893	15.0	N	4.0	E	3	NE	SW	NE	NON-EXEMPT	WP	IRR	3/21/1977	300	300	8	140	140	0		DEMUTH	
	630171	15.0	N	4.0	E	3	NE	SW	NE	EXEMPT	WP	D,S,IRR	7/1/1977	180	125	6					MARTIN,S L	
	647725	15.0	N	4.0	E	3	NE	SW	NE	EXEMPT	WP	D	12/19/1973	340	44	6	40	40	0		REYNOLDS, JOHN,D	
	504817	15.0	N	4.0	E	3	NE	SW	NE	EXEMPT	WP	D	1/31/1983	182	20	6	15	15		X	JACHOWSKI, VIVIAN,D	
	534546	15.0	N	4.0	E	3	NE	SW	NE	EXEMPT	WP	D	3/20/1992	200	90	6	15	15		X	GABLE	
	547981	15.0	N	4.0	E	3	NE	SW	NE	EXEMPT	WP	D	4/3/1995	85	39	8	10	10	0	X	FOXTON	
	548801	15.0	N	4.0	E	3	NE	SW	NE	EXEMPT	WP	D	5/8/1995	98	50	8	10	10		X	KOELBEL	
	608894	15.0	N	4.0	E	3	NE	SW	NE	EXEMPT	WP	D	2/20/1968	233	12	6	20	20	0		PAUL G & MARY S MILLAR FA	
	503671	15.0	N	4.0	E	3	NE	SW	NW	EXEMPT	WP	D									WILSON,R	Y
	511767	15.0	N	4.0	E	3	NE	SW	NW	EXEMPT	WP	D	7/20/1985	180	60	6	15	15		X	PARISH,H H	
	522879	15.0	N	4.0	E	3	NE	SW	NW	EXEMPT	WP	D	3/22/1989	314	56	6	15	14		X	MESA, DAN,	
	648811	15.0	N	4.0	E	3	NE	SW	NW	EXEMPT	WP	D	7/24/1974	310	50	1	20	20	0		OSBORN,D L	
	649114	15.0	N	4.0	E	3	NE	SW	NW	EXEMPT	WP	D									EMSLEY,P J	
	545138	15.0	N	4.0	E	3	NE	SW	NW	EXEMPT	WP	D	11/6/1994	220	78	6				X	VANECK, PETER,	
	562976	15.0	N	4.0	E	3	NE	SW	NW	EXEMPT	WP	D	7/9/1997	170	32	6				X	DUNN, TAMARA,	
	571494	15.0	N	4.0	E	3	NE	SW	NW	EXEMPT	WP	D	1/30/1999	230	55	6				X	FREE	
44	604262	15.0	N	4.0	E	3	NE	SW	SW	NON-EXEMPT	WP	D	8/27/1973	133	42	6	5	5	0		EATON,L G	
	630873	15.0	N	4.0	E	3	NE	SW	SW	EXEMPT	WP	D	1/1/1978	215	59	6					BILLINGSLEY,C C	
	641004	15.0	N	4.0	E	3	NE	SW	SW	EXEMPT	WP	D	9/14/1978	55	23	6	30	30	0		FARNHAM,H E	
45	802375	15.0	N	4.0	E	3	NE	SW	SW	NON-EXEMPT	WP	D	7/1/1978	183	150	6	5	5	0		LUNGREN,M	
	566290	15.0	N	4.0	E	3	NE	SW	SW	EXEMPT	WP	D	2/2/1998	243	49	6				X	BENICH	
	502338	15.0	N	4.0	E	3	NE	SW	SE	EXEMPT	CAP	D	4/6/1982	80	35	6				X	RAYMOND, GREGORY,	
	648947	15.0	N	4.0	E	3	NE	SW	SE	EXEMPT	WP	D,IRR	10/29/1973	333	55	6	34	34	0		RIKAS	
	650368	15.0	N	4.0	E	3	NE	SW	SE	EXEMPT	WP	D	12/1/1975	310		6					HEISLEY,F	
	647837	15.0	N	4.0	E	3	NE	SW	SE	EXEMPT	WP	D	8/16/1977	520		6					REYNOLDS, JOHN,D	
	543052	15.0	N	4.0	E	3	NE	SW	SE	EXEMPT	WP	D									KESSEL, DAVID,J	Y
	551544	15.0	N	4.0	E	3	NE	SW	SE	EXEMPT	WP	D	10/26/1995	100	43	6	20	15	0	X	LEWIS, DAVID,	
	801444	15.0	N	4.0	E	3	NE	SE		EXEMPT	WP	D				6	15	15	0		JOSEPH	
	544405	15.0	N	4.0	E	3	NE	SE	NE	EXEMPT	WP	D									FANNING, ARTHUR,	Y
	802628	15.0	N	4.0	E	3	NE	SE	NE	EXEMPT	WP	IRR,D	5/29/1984	180	85	6	15	15	0		AZ DIST COUNCIL OF,	
	520456	15.0	N	4.0	E	3	NE	SE	NE	EXEMPT	WP	D	5/10/1988	220	97	6				X	BURT, JACK,	
	506882	15.0	N	4.0	E	3	NE	SE	NW	EXEMPT	WP	D	12/26/1983	225	125	5				X	SLIPHER,J	
	524414	15.0	N	4.0	E	3	NE	SE	NW	EXEMPT	WP	D									MOYER, PHILLIP,	Y
	529900	15.0	N	4.0	E	3	NE	SE	NW	EXEMPT	WP	D	1/2/1991	230	67	6	25	25	0	X	MOYER, PHILLIP,	
	556630	15.0	N	4.0	E	3	NE	SE	NW	EXEMPT	WP	D	11/18/1996	95	70	8				X	MEACHAM	
	612458	15.0	N	4.0	E	3	NE	SE	NW	EXEMPT	WP	D,IRR	1/1/1979	180		6					WILLIAMS JR,D	
	630528	15.0	N	4.0	E	3	NE	SE	NW	EXEMPT	WP	D	1/12/1978	278	78	6	30	30	0		MECHAM	
	641535	15.0	N	4.0	E	3	NE	SE	NW	EXEMPT	WP	D	8/1/1979	110	70	6	27	27	0		SLIPHER,E C	
	800949	15.0	N	4.0	E	3	NE	SE	NW	EXEMPT	WP	D	1/1/1973	200	600	6	20	20	0		FREEL,L J	Y
	578025	15.0	N	4.0	E	3	NE	SE	NW	EXEMPT	WP	D	5/13/2000	228		6	18	18		X	ISLAS	
	629924	15.0	N	4.0	E	3	NE	SE	SW	EXEMPT	WP	D		159		6	35	35	0		CARON	
	518786	15.0	N	4.0	E	3	NE	SE	SW	EXEMPT	WP	D	9/11/1987	255	75	6	15	30	0	X	GROTLUSCHEN, MATHEW,	

Source: ADWR 55- Well Registry, 2005

APPENDIX A
ADWR WELL INVENTORY

Map ID	ADWR Reg.	T		R		Sect	Acre160	Acre 40	Acre 10	Well Type	Well Use	Water Use	Date	Depth	WL	Width	Pump Rate	Test Rate	DD	Drill Log	Owner	Cancel
46	805336	15.0	N	4.0	E	3	NE	SE	SW	NON-EXEMPT	WP	D,S	12/31/1978	137	93	6					ROHLOFF, DAN & B.,	
	550074	15.0	N	4.0	E	3	NE	SE	SW	EXEMPT	WP	D					15	5			PLENGE, LONNY,D	
	901737	15.0	N	4.0	E	3	NE	SE	SW	EXEMPT		D		242	100	6				X	WILSON	
	085004	15.0	N	4.0	E	3	NE	SE	SE	EXEMPT	ABAN	D	1/1/1980	150	65	6				X	ISLAS	
	085274	15.0	N	4.0	E	3	NE	SE	SE	EXEMPT	WP	D	1/1/1980	139	90	6	10	10	0		MANIERRE,	
	647320	15.0	N	4.0	E	3	NE	SE	SE	EXEMPT	WP	D,IRR	7/30/1980	138	90						COX,F E	
	630011	15.0	N	4.0	E	3	NE	SE	SE	EXEMPT	WP	IRR,S,D	3/22/1977	180	150	6	20	20	0		LACY,J C	
	647122	15.0	N	4.0	E	3	NE	SE	SE	EXEMPT	WP	D	1/1/1978	163		6					PRITCHARD,L L	
	647724	15.0	N	4.0	E	3	NE	SE	SE	EXEMPT	WP	D	11/10/1977	340	98	6	35	35	0		NIELSEN,M	
	648832	15.0	N	4.0	E	3	NE	SE	SE	EXEMPT	WP	D	3/1/1979	235	125	6	20	20	0		MILKOWSKI,A V	
	650285	15.0	N	4.0	E	3	NE	SE	SE	EXEMPT	WP	D		168							AVIGNON,J E	
	802338	15.0	N	4.0	E	3	NE	SE	SE	EXEMPT	WP	D	7/21/1978	184	91	6	25	25	0		BENNETT	
	802464	15.0	N	4.0	E	3	NE	SE	SE	EXEMPT	WP	D,IRR	4/14/1981	220	80	6	13	13	0		ANDERSON,A G	
	525399	15.0	N	4.0	E	3	NE	SE	SE	EXEMPT	WP	D	8/11/1989	260	125	6	15	12		X	GRAHAM, ROBERT,	
	531507	15.0	N	4.0	E	3	NE	SE	SE	EXEMPT	WP	D	5/21/1991	237	85	6	15	15		X	GRAHAM, ROBERT,P	
	542280	15.0	N	4.0	E	3	NE	SE	SE	EXEMPT	WP	D	2/25/1994	250	95	6	15	15		X	MOBLEY, LEO,L	
	085005	15.0	N	4.0	E	3	NE	SE	SE	EXEMPT	WP	D	1/1/1980	90		6		10	0		TANNER RON,	
	649031	15.0	N	4.0	E	3	NW			EXEMPT	WP	D									VALLEY NATIONAL BANK,	
	623303	15.0	N	4.0	E	3	NW			EXEMPT			1/21/1961	205	22	6	35	35	0		CASTILLO,M L	Y
47	621603	15.0	N	4.0	E	3	NW			NON-EXEMPT	WP	IRR,S,D	4/5/1958	216	42	6	34	34	0		GODARD,E	
48	643144	15.0	N	4.0	E	3	NW	NE	SE	NON-EXEMPT	WP	D,S,IRR	1/1/1970	350	35	6	1	1	0		BAXTER,C	
	565261	15.0	N	4.0	E	3	NW	NW	NE	EXEMPT	WP	D									VAN	Y
	597407	15.0	N	4.0	E	3	NW	NW	NE	EXEMPT	WP	D,S	5/8/2003	171		7	20	20		X	LEINWEBER	
49	085263	15.0	N	4.0	E	3	NW	NW	NW	NON-EXEMPT	WP	D,IRR	9/26/1980	331		5	30	30	0		COMMUNITY LVNG WATER,	
	611888	15.0	N	4.0	E	3	NW	NW	NW	EXEMPT	WP	D	1/1/1946	40	35	12					FRENCH,B	
50	611886	15.0	N	4.0	E	3	NW	NW	NW	NON-EXEMPT	WP	IRR	12/31/1958	60	37	6					FRENCH, HARRY,	
	611889	15.0	N	4.0	E	3	NW	NW	NW	EXEMPT	WP	D	1/1/1960	150	35	6	10				FRENCH,B	
	611890	15.0	N	4.0	E	3	NW	NW	NW	EXEMPT	WP	D	10/22/1979	152	152	6	30				FRENCH & RUNNELS,	
	611892	15.0	N	4.0	E	3	NW	NW	NW	EXEMPT	WP	D	9/26/1980	326	250	8	30				CMNTY LIVING WATER,	
	900301	15.0	N	4.0	E	3	NW	NW	SW	EXEMPT		D		195	4	6				X	COMMUNITY OF LIVING WATER	
	645801	15.0	N	4.0	E	3	NW	NW	SE	EXEMPT	WP	D,S,D	9/2/1978	70	35	6	27	27	0		KLECK	Y
	647699	15.0	N	4.0	E	3	NW	NW	SE	EXEMPT	WP	D		200							CAMPBELL,R E	
	647893	15.0	N	4.0	E	3	NW	SW		EXEMPT	WP	D	1/1/1963	218	27	6	15	15	0		SUDEN,P B	
	644057	15.0	N	4.0	E	3	NW	SW		EXEMPT	WP	S,D	1/1/1945	280	20	8	28	28	0		JONES, ROBERT TRUST,G	
	644058	15.0	N	4.0	E	3	NW	SW		EXEMPT	WP	S,D	1/20/1958	250	60	7	22	22	0		JONES, ROBERT TRUST,G	
	647894	15.0	N	4.0	E	3	NW	SW		EXEMPT	WP	D	2/11/1969	227	27	6	35	35	0		NENNIGER,P	
	647895	15.0	N	4.0	E	3	NW	SW		EXEMPT	WP	D	1/1/1963	90	25	6	10	10	0		SUDEN,P B	
	620653	15.0	N	4.0	E	3	NW	SW	SW	EXEMPT	WP	D,IRR	6/14/1977	220	60	6	20	20	0		PHILLIPS,M S	
	506724	15.0	N	4.0	E	3	NW	SW	SE	EXEMPT	WP	D	3/19/1984	209	53	6	30	30		X	ALLEN, ARTHUR,M	
	524337	15.0	N	4.0	E	3	NW	SW	SE	EXEMPT	WP	D	6/1/1989	250	37	6	15	25	0	X	WHEELER, BRADLEY,	
	568675	15.0	N	4.0	E	3	NW	SW	SE	EXEMPT	WP	D	10/6/1998	170	35	6	12			X	WIERTZEMA	
	648150	15.0	N	4.0	E	3	NW	SW	SE	EXEMPT	WP	D	1/1/1960	205	26	6	20	20	0		MEIER,R E	
	648801	15.0	N	4.0	E	3	NW	SW	SE	EXEMPT	WP	D	1/21/1961	205	22	6	35	35	0		HELGESON, EDWIN,	
	648819	15.0	N	4.0	E	3	NW	SW	SE	EXEMPT	WP	D	6/10/1971	200		6	2	2	0		DYER	
	650295	15.0	N	4.0	E	3	NW	SW	SE	EXEMPT	WP	D,IRR	1/1/1968	325	15		20	20	0		LWINGSTON,J	
	503123	15.0	N	4.0	E	3	NW	SW	SE	EXEMPT	WP	D	7/23/1982	207	35	6	20	20	0	X	JOSLIN	
51	569553	15.0	N	4.0	E	3	NW	SW	SE	NON-EXEMPT	WP	D	12/4/1998	220	30	12		106		X	WIERTZEMA	
52	581551	15.0	N	4.0	E	3	NW	SW	SE	NON-EXEMPT	WP	D	6/25/2000	220	35	12	300	106		X	WIERTZEMA	
	592882	15.0	N	4.0	E	3	NW	SW	SE	EXEMPT	WP	D					25	25	0		WIERTZEMA	
	650107	15.0	N	4.0	E	3	NW	SE	NE	EXEMPT	WP	D,IRR	9/1/1969	235	30	8	30	30	0		CRUFF, KENNETH,H	
	558635	15.0	N	4.0	E	3	NW	SE	NE	EXEMPT	WP	D	9/11/1996	212	105	6				X	MAGNUSON, ELIZABETH,M	
	569506	15.0	N	4.0	E	3	NW	SE	NE	EXEMPT	WP	D	11/28/1998	215	38	6				X	BRITT & O'CONNOR	
	524044	15.0	N	4.0	E	3	NW	SE	NW	EXEMPT	WP	D	4/23/1989	233	60	6	15	15	0	X	FLANAGAN	
	532230	15.0	N	4.0	E	3	NW	SE	NW	EXEMPT	WP	D	7/16/1991	207	40	6	22	30		X	GRISWOLD	
	544919	15.0	N	4.0	E	3	NW	SE	NW	EXEMPT	WP	D									TUCKER, JAMES JR,R	Y

Source: ADWR 55- Well Registry, 2005

APPENDIX A
ADWR WELL INVENTORY

Map ID	ADWR Reg.	T		R		Sect	Acre160	Acre 40	Acre 10	Well Type	Well Use	Water Use	Date	Depth	WL	Width	Pump Rate	Test Rate	DD	Drill Log	Owner	Cancel
	557124	15.0	N	4.0	E	3	NW	SE	NW	EXEMPT	WP	D,IRR	5/20/1996	206	55	6				X	VALLEY, ELAINE,	
	501691	15.0	N	4.0	E	3	NW	SE	NW	EXEMPT	WP	D	1/15/1982	205	41	6	15	15		X	SWAPP,A	
	511148	15.0	N	4.0	E	3	NW	SE	NW	EXEMPT	WP	D	6/7/1985	200	35	6	20	20		X	BUCK,M	
	803338	15.0	N	4.0	E	3	NW	SE	NW	EXEMPT	WP	D									MOORE	
	602164	15.0	N	4.0	E	3	NW	SE	SW	EXEMPT	WP	IRR	12/22/1977	206	31	6					JOHNSON,R T	
	647437	15.0	N	4.0	E	3	NW	SE	SW	EXEMPT	WP	D	11/25/1977	290	44	6	18	18	0		BELKNAP,C D	
	650070	15.0	N	4.0	E	3	NW	SE	SW	EXEMPT	WP	D	6/28/1979	165	105	6	10	10	0		WALKER,C R	
	602163	15.0	N	4.0	E	3	NW	SE	SW	EXEMPT	WP	D,IRR	5/11/1972	208	30	6	18	18	0		JOHNSON,R T	
	576440	15.0	N	4.0	E	3	NW	SE	SW	EXEMPT	WP	D	8/3/1999	200	35	6				X	BUCK	
	648149	15.0	N	4.0	E	3	NW	SE	SE	EXEMPT	WP	D	3/5/1979	222	40	6	15	15	0		EVANS	
	649769	15.0	N	4.0	E	3	NW	SE	SE	EXEMPT	WP	D	1/1/1968	190	50	6	27	27	0		WHYTE JR	
	805122	15.0	N	4.0	E	3	NW	SE	SE	EXEMPT	WP	D				6	20				JOHNSTON	
	649768	15.0	N	4.0	E	3	NW	SE	SE	EXEMPT			5/1/1970	220	50	6					WHYTE JR	
	805186	15.0	N	4.0	E	3	SW			EXEMPT	WP	D	12/31/1967				25				BAKER, JAMES,K	
	629500	15.0	N	4.0	E	3	SW			EXEMPT	WP	S,D		70	16	6	15	15	0		CODY, JAMES,J	
	641493	15.0	N	4.0	E	3	SW			EXEMPT	WP	D		48	15	6	25	25	0		SMITH,R C	
53	600341	15.0	N	4.0	E	3	SW			NON-EXEMPT	WP	IRR,D	4/15/1958	250	25	6	135	135	0	N	BARRON, REGINALD,	
	630782	15.0	N	4.0	E	3	SW	NE		EXEMPT	WP	D	3/1/1962	185	40	6	10	10	0		STADELMAN,A	
	632828	15.0	N	4.0	E	3	SW	NE		EXEMPT	WP	D	1/1/1971	237	54	6	15	15	0		KENNEDY,G J	
	633007	15.0	N	4.0	E	3	SW	NE		EXEMPT	WP	D,IRR	3/1/1972	230	45	6	19	19	0		JOBE	
	643289	15.0	N	4.0	E	3	SW	NE		EXEMPT	WP	D	3/16/1972	212	30	6	30	30	0		KILLIPS, JOHN,M	
	645216	15.0	N	4.0	E	3	SW	NE		EXEMPT	WP	D									WILSON,C C	
	649445	15.0	N	4.0	E	3	SW	NE		EXEMPT	WP	D									LIVINGSTON	
	800335	15.0	N	4.0	E	3	SW	NE		EXEMPT	WP	D	6/15/1974	235	34	4	25	25	0		DAVIS JR,R F	
	649486	15.0	N	4.0	E	3	SW	NE		EXEMPT	WP	IRR,D	12/15/1978	137							SMITH,D F	
54	628657	15.0	N	4.0	E	3	SW	NE	NE	NON-EXEMPT	WP	D	1/7/1973	310	50	6	50	50	0		VALENZUELA,B D	
	806862	15.0	N	4.0	E	3	SW	NE	NE	EXEMPT	WP	D	11/15/1973	220	30	6	15				EVANS	
	597008	15.0	N	4.0	E	3	SW	NE	NE	EXEMPT	WP	D,S	5/10/2003	320	44	6				X	JOANNA DEWITT GRAHM REV.	
	808530	15.0	N	4.0	E	3	SW	NE	NE	EXEMPT											0	
	900654	15.0	N	4.0	E	3	SW	NE	NE	EXEMPT		D		335	34	6				X	WRIGHT	
	646084	15.0	N	4.0	E	3	SW	NE	NW	EXEMPT	WP	D					10	10	0		CREMER,W	
	902253	15.0	N	4.0	E	3	SW	NE	NW	EXEMPT		D		260	40	6				X	COCHRAN	
	552189	15.0	N	4.0	E	3	SW	NE	SW	EXEMPT	WP	D	11/20/1995	218	43	6	10	15		X	AYER	
	610116	15.0	N	4.0	E	3	SW	NE	SW	EXEMPT	WP	IRR,D	7/13/1970	185	90	6	35	35	0		AYER	
	640669	15.0	N	4.0	E	3	SW	NE	SW	EXEMPT	WP	D	7/5/1972	230	80	7	14	14	0		COCHRAN, DONALD,L	
	641996	15.0	N	4.0	E	3	SW	NE	SW	EXEMPT	WP	D		160							BOOSEY,N N	
	646911	15.0	N	4.0	E	3	SW	NE	SW	EXEMPT	WP	D		180	80	6					SNOWDEN WADSWORTH,,	
	558636	15.0	N	4.0	E	3	SW	NE	SW	EXEMPT	WP	D	8/31/1996	175	55	6	10	10	0	X	PEKARA	
	529849	15.0	N	4.0	E	3	SW	NE	SE	EXEMPT	WP	D,IRR									GOTHRIE, JOHN,T	Y
	642165	15.0	N	4.0	E	3	SW	NE	SE	EXEMPT			12/22/1975	390	80	8	20	20	0		ISLAS, JESUS & A.,	
	649435	15.0	N	4.0	E	3	SW	NE	SE	EXEMPT	WP	D	11/1/1975	200	50	6	8	8	0		EVANS,D R	
	806548	15.0	N	4.0	E	3	SW	NE	SE	EXEMPT	WP	D	12/31/1972								IGNACIO	
	596755	15.0	N	4.0	E	3	SW	NE	SE	EXEMPT	WP	D									LOBSINGER	Y
	596812	15.0	N	4.0	E	3	SW	NE	SE	EXEMPT	WP	D	10/11/2003		55	7				X	GRAY	
	596841	15.0	N	4.0	E	3	SW	NE	SE	EXEMPT	WP	,S									TURMAS	Y
	900167	15.0	N	4.0	E	3	SW	NE	SE	EXEMPT		D		230	80	6				X	WAGNER	
55	601325	15.0	N	4.0	E	3	SW	NW		NON-EXEMPT	WP	IRR,S,D	2/3/1971	100	40	6	50	50	0		SEGINSKI,W E	
	803079	15.0	N	4.0	E	3	SW	NW		EXEMPT	WP	D									HUBBELL, BRIGGS,	
	532242	15.0	N	4.0	E	3	SW	NW	NE	EXEMPT	WP	D	7/28/1991	133	12	6	20	20		X	ESCOBEDO	
	561008	15.0	N	4.0	E	3	SW	NW	NW	EXEMPT	WP	D	3/11/1997	130	45	6				X	PIAS, MICHAEL,J	
	649564	15.0	N	4.0	E	3	SW	NW	SE	EXEMPT	WP	D	10/19/1978	115	36	6	20	20	0		JOHNSON, GRANT,	
	627381	15.0	N	4.0	E	3	SW	SW		EXEMPT	WP	D	1/1/1973	69	16	6	35				TIGNOR,G	
	630050	15.0	N	4.0	E	3	SW	SW		EXEMPT	WP	D	3/23/1973	85	5	6	30	30	0		LEONARD	
	630929	15.0	N	4.0	E	3	SW	SW		EXEMPT	WP	D	1/1/1950	50	25	6					BAKER, JAMES ETAL,K	
	641304	15.0	N	4.0	E	3	SW	SW		EXEMPT	WP	D	4/15/1967	55	20	8					HEALY, BILL & SHARON,	

Source: ADWR 55- Well Registry, 2005

APPENDIX A
ADWR WELL INVENTORY

Map ID	ADWR Reg.	T		R		Sect	Acre160	Acre 40	Acre 10	Well Type	Well Use	Water Use	Date	Depth	WL	Width	Pump Rate	Test Rate	DD	Drill Log	Owner	Cancel
	563278	15.0	N	4.0	E	3	SW	SW	NE	EXEMPT	WP	D	7/28/1997	100	22	6				X	MC CALLUM	
	645093	15.0	N	4.0	E	3	SW	SW	NW	EXEMPT	WP	D,IRR	11/25/1976	130	10	6	5	5	0		CORYN	
	643997	15.0	N	4.0	E	3	SW	SW	SW	EXEMPT	WP	D	6/1/1978	68	19	6					CLARK/O'CONNOR	
	645675	15.0	N	4.0	E	3	SW	SW	SW	EXEMPT	WP	D	9/13/1976	60	15	6	34	34	0		OCCONOR	
	806731	15.0	N	4.0	E	3	SW	SW	SW	EXEMPT	WP	D	12/31/1960	400	19	6	30				BARRON, REGINALD,	
	513161	15.0	N	4.0	E	3	SW	SW	SW	EXEMPT	WP	D	1/22/1986	70	8	8	26			X	RICE	
	541621	15.0	N	4.0	E	3	SW	SW	SW	EXEMPT	WP	D	3/3/1994	240	90	6	25	35		X	CORNVILLE PAGE,	
	567411	15.0	N	4.0	E	3	SW	SW	SW	EXEMPT	WP	D	3/21/1998	80	15	6				X	LEONARD	
	503242	15.0	N	4.0	E	3	SW	SW	SE	EXEMPT	WP	D									KREIZINGER,R	Y
	503243	15.0	N	4.0	E	3	SW	SW	SE	EXEMPT	WP	D									KREIZINGER,R	Y
	511672	15.0	N	4.0	E	3	SW	SW	SE	EXEMPT	WP	D,IRR,S	7/9/1985								KREISINGER, RAY,F	Y
	511673	15.0	N	4.0	E	3	SW	SW	SE	EXEMPT	WP	D,IRR,S	7/9/1985								KREISINGER, RAY,F	Y
	648183	15.0	N	4.0	E	3	SW	SW	SE	EXEMPT	WP	D	7/25/1973	117							KREIZINGER,R	
	625311	15.0	N	4.0	E	3	SE	NE		EXEMPT	WP	IRR,D									MC MURTRY,M A	
	631229	15.0	N	4.0	E	3	SE	NE		EXEMPT	WP	D	1/1/1974	160		6	6	6	0		0	
	642872	15.0	N	4.0	E	3	SE	NE		EXEMPT	WP	D,S	2/20/1973	250		6					WILLIAMSON/PETERSON	
	632243	15.0	N	4.0	E	3	SE	NE		EXEMPT	WP	D									NIEMI	
	522487	15.0	N	4.0	E	3	SE	NE	NE	EXEMPT	WP	D									ESTHER, TALBERT,	Y
	522488	15.0	N	4.0	E	3	SE	NE	NE	D, S, E	WP	D									TALBERT, ESTHER,	Y
	561716	15.0	N	4.0	E	3	SE	NE	NE	EXEMPT	WP	D	4/30/1997	90	37	6				X	ALVEY, JOHN,W	
	527204	15.0	N	4.0	E	3	SE	NE	NE	EXEMPT	WP	D	3/15/1990	275	70	6	15	15	0	X	TALBERT, ESTHER,	
	536302	15.0	N	4.0	E	3	SE	NE	NE	EXEMPT	WP	D	8/18/1992	80	20	6	10	10		X	CHILDREE	
	555519	15.0	N	4.0	E	3	SE	NE	NE	EXEMPT	WP	D	5/15/1996	135	55	6	15	15		X	WHITE, NATHAN,S	
	593893	15.0	N	4.0	E	3	SE	NE	NE	EXEMPT	WP	D	9/5/2002	140	23	6	15	15		X	CHILDREE	
	521639	15.0	N	4.0	E	3	SE	NE	NW	EXEMPT	WP	D	7/10/1988	202	30	6	35	15		X	HIGHFIELD & BAIRD	
	530663	15.0	N	4.0	E	3	SE	NE	NW	EXEMPT	WP	D	3/12/1991	305	67	6	20	20	0	X	BREWER, BOBBY WADE,	
	610196	15.0	N	4.0	E	3	SE	NE	NW	EXEMPT	WP	D	9/17/1960	70	38	8	3	3	0		WRIGHT	
	610194	15.0	N	4.0	E	3	SE	NE	NW	NON-EXEMPT	ABAN	D	1/1/1979	150	38	6	5	5	0		BENTLEY,H J	Y
	525382	15.0	N	4.0	E	3	SE	NE	SW	EXEMPT	WP	D									ISLAS, AMADOR,	Y
	537479	15.0	N	4.0	E	3	SE	NE	SW	EXEMPT	WP	D	3/6/1993	100	80	6	10	12		X	BEHNKE, JEREMY,R	
	542786	15.0	N	4.0	E	3	SE	NE	SW	EXEMPT	WP	D	3/19/1994	218	69	6	16	16		X	MCDONALD, KELLY,	
	546943	15.0	N	4.0	E	3	SE	NE	SW	EXEMPT	WP	D,IRR	12/20/1994	55	35	8	16	16	0	X	OLSON, JOHN,	
	573830	15.0	N	4.0	E	3	SE	NE	SW	EXEMPT	WP	D	5/7/1999	63	31	6	20	20	0	X	SPUDE	
	900526	15.0	N	4.0	E	3	SE	NE	SW	EXEMPT		D		180	40	5				X	SPUDE	
	634560	15.0	N	4.0	E	3	SE	NW		EXEMPT	WP	D,IRR	3/27/1957	250	90	6					SOBLEY,D E	
	642169	15.0	N	4.0	E	3	SE	NW		EXEMPT	WP	IRR,S,D	7/12/1963	207	50	6	35	35	0		SOBLEY EARL,	
	647121	15.0	N	4.0	E	3	SE	NW		EXEMPT	WP	D									PRITCHARD,L L	
	645520	15.0	N	4.0	E	3	SE	NW		EXEMPT	WP	D	1/1/1945	153		8					BADGER,D E	
	643694	15.0	N	4.0	E	3	SE	NW	NE	EXEMPT	WP	D,S	1/1/1964	100	30	6					BAXTER,C	
	537650	15.0	N	4.0	E	3	SE	NW	NE	EXEMPT	WP	D	12/27/1992	85	45	6	10	8		X	WRIGHT	
	519215	15.0	N	4.0	E	3	SE	NW	NW	EXEMPT	WP	D									MOYER, PHILLIP,	Y
	632723	15.0	N	4.0	E	3	SE	NW	NW	EXEMPT	WP	D	4/27/1979	125	35	7					DUSEK,D J	
	522878	15.0	N	4.0	E	3	SE	NW	NW	EXEMPT	WP	D	11/21/1988	300	165	6	15	35	0	X	MOENY, WILLIAM,	
	519986	15.0	N	4.0	E	3	SE	SW	NE	EXEMPT	WP	D,IRR	2/28/1988	340	56	6	35	35		X	HAWPE	
	802846	15.0	N	4.0	E	3	SE	SW	SE	EXEMPT	WP	D									LINGO ET AL,D F	
	502854	15.0	N	4.0	E	3	SE	SE		EXEMPT	WP	D	4/25/1982	150	68	8	13	13	0	X	H & D SCHWAB,	
	637063	15.0	N	4.0	E	3	SE	SE		EXEMPT	WP	D		100	80	6	35	35	0		GARDNER,A F	
	647636	15.0	N	4.0	E	3	SE	SE		EXEMPT	WP	D	1/1/1957	150	60	8	10	10	0		JOHNSON,D	
	649725	15.0	N	4.0	E	3	SE	SE		EXEMPT	WP	D	1/1/1972	150	75	6	25	25	0		BALLATORE, KELLY,	
	803221	15.0	N	4.0	E	3	SE	SE		EXEMPT	WP	D	1/1/1965	100	32		20				UTZ, ANTHONY,	
	650134	15.0	N	4.0	E	3	SE	SE		EXEMPT	WP	D	5/22/1982	150	62	8	13	13	0		SCHWAB,H W	
56	625312	15.0	N	4.0	E	3	SE	SE	NE	NON-EXEMPT	WP	IRR,D	2/1/1977	141	52	6					MC MURTRY,M A	
	637243	15.0	N	4.0	E	3	SE	SE	NE	EXEMPT	WP	D	5/15/1980	150	110	6	20	20	0		BRAMBLETT	
57	509580	15.0	N	4.0	E	3	SE	SE	NE	NON-EXEMPT	WP	D	1/9/1985	187	85	6	10	10		X	MOORE	
	802760	15.0	N	4.0	E	3	SE	SE	NE	EXEMPT	WP	D	1/1/1979	200		6	20	20	0		FREEL,J	

Source: ADWR 55- Well Registry, 2005

APPENDIX A
ADWR WELL INVENTORY

Map ID	ADWR Reg.	T		R		Sect	Acre160	Acre 40	Acre 10	Well Type	Well Use	Water Use	Date	Depth	WL	Width	Pump Rate	Test Rate	DD	Drill Log	Owner	Cancel
	596762	15.0	N	4.0	E	3	SE	SE	NW	EXEMPT	WP	D,S		145	100	6				X	SCHWAB	
	578643	15.0	N	4.0	E	3	SE	SE	SW	EXEMPT	WP	D	12/7/2000	180	130	6				X	GARDNER	N
	593710	15.0	N	4.0	E	3	SE	SE	SW	EXEMPT	WP	D	9/1/2002	185	93	6	15	15		X	SPUDE	
	500416	15.0	N	4.0	E	3	SE	SE	SE	EXEMPT	WP	D	1/1/1981	155	30	6		18	0	X	ALLEN,W	
	506420	15.0	N	4.0	E	3	SE	SE	SE	EXEMPT	WP	D	10/6/1983	150	21	5	10	10	0	X	BROOKS,M L	
	531149	15.0	N	4.0	E	3	SE	SE	SE	D, S, E	WP	D									BEHNKE, JEREMY,	Y
	549738	15.0	N	4.0	E	3	SE	SE	SE	EXEMPT	WP	D	5/15/1995	145	105	6	12	12		X	DAVIS, BARRY,	
58	606442	15.0	N	4.0	E	3	SE	SE	SE	NON-EXEMPT	WP	IRR	3/9/1959	465	75	6	35	35	0		MONTGOMERY, ROBERT,E	
	642893	15.0	N	4.0	E	3	SE	SE	SE	EXEMPT	WP	D	1/1/1971								RACKOV,J L	
	642894	15.0	N	4.0	E	3	SE	SE	SE	EXEMPT	WP	D									WEST, J & SHERRY,	
	805798	15.0	N	4.0	E	3	SE	SE	SE	EXEMPT	WP	D,COM,IRR	12/31/1960	150	80	6	7				LECK, JAMES,	
	532241	15.0	N	4.0	E	3	SE	SE	SE	EXEMPT	WP	D	7/20/1993	190	97	6				X	FANCHER, MARY,	
59	618380	15.0	N	4.0	E	4				NON-EXEMPT	WP	IRR,S,D	1/1/1965	125	5	6					CONROY	
60	618379	15.0	N	4.0	E	4				NON-EXEMPT	WP	IRR,S	1/1/1969	245	10	6					CONROY	
	647443	15.0	N	4.0	E	4				EXEMPT	WP	D	4/28/1976	120		6					KEMPNER,S	
	651020	15.0	N	4.0	E	4				EXEMPT	WP	IRR	10/10/1959	153	14	8	60				SEARLE, RICHARD,	
	651021	15.0	N	4.0	E	4				EXEMPT	WP	D	3/19/1969	190	10		15	15	0		SEARLE, RICHARD,	
	802996	15.0	N	4.0	E	4				EXEMPT	WP	D									KEMPNER,	
	805497	15.0	N	4.0	E	4				EXEMPT	WP	D	12/31/1975	85	12	6	25				COTTER	
	647864	15.0	N	4.0	E	4				EXEMPT	WP	D	1/1/1970	78	12	6	10	10	0		WOODS,G E	
	641842	15.0	N	4.0	E	4	NE			EXEMPT	WP	D	7/17/1975	82	20	6	24	24	0		STONE,R O	
61	612443	15.0	N	4.0	E	4	NE			NON-EXEMPT	WP	IRR,S,D	1/1/1961								NENAD,D R	
	582002	15.0	N	4.0	E	4	NE	NE	NE	EXEMPT	WP	D	7/21/2000	260	20	6				X	CHUPP	
	563094	15.0	N	4.0	E	4	NE	NE	NW	EXEMPT	WP	D									KEMPNER, ALAN,	
	803784	15.0	N	4.0	E	4	NE	NE	NW	EXEMPT	WP	D,S	1/1/1971	255	30	8	25				CONROY	
	641730	15.0	N	4.0	E	4	NE	SE		EXEMPT	WP	D	1/1/1960	55	24	6	10	10	0		SHORT ET AL,R E	
	637930	15.0	N	4.0	E	4	NE	SE	NE	EXEMPT	WP	D		94	25	6	25	25	0		BLAY, JOE & BETH,E	
	900791	15.0	N	4.0	E	4	NE	SE	NE	EXEMPT		D									JONES	
	532240	15.0	N	4.0	E	4	NE	SE	NW	EXEMPT	WP	D	8/9/1991	96	25	6	20	15		X	BLAY, JOE & BETH,	
	511967	15.0	N	4.0	E	4	NE	SE	SW	EXEMPT	WP	D	8/9/1985	52	25	6	10	10		X	RAAB,C B	
	631491	15.0	N	4.0	E	4	NE	SE	SW	EXEMPT	WP	D					10				LEAHY, ROBERT,M	
	645663	15.0	N	4.0	E	4	NE	SE	SW	EXEMPT	WP	D,IRR	1/1/1973	105	53		10	10	0		WILLOUGHBY	
	514021	15.0	N	4.0	E	4	NE	SE	SW	EXEMPT	WP	D	4/22/1986	119	23	6	20	20		X	SHORT, ERIC & JODI,	
	581629	15.0	N	4.0	E	4	NE	SE	SE	MONITOR	MON	T	7/10/2000	55	40	4				X	WOODYS ENTERPRISES INC	
	634527	15.0	N	4.0	E	4	NW	NW	SW	EXEMPT	WP	D	1/1/1977	250	23	6	20	20	0		ASPAAS,M	
	642153	15.0	N	4.0	E	4	SE	NE	NW	EXEMPT	WP	D		100	30	6	24	24	0		ALEXANDER, REBECCA L,.	
	542279	15.0	N	4.0	E	4	SE	NE	SW	EXEMPT	WP	D	2/1/1995	154	70	6				X	DURGAIN AND CONSTANCE GIL	
	548879	15.0	N	4.0	E	4	SE	NE	SW	EXEMPT	WP	D	12/13/1995	140	53	6				X	BODIAN	
	575275	15.0	N	4.0	E	4	SE	NE	SW	EXEMPT	WP	D	2/1/2000	147	100	6				X	BEJARE	
	578264	15.0	N	4.0	E	4	SE	NE	SW	EXEMPT	WP		12/24/1999	170		6	10	10		X	BIRCH	
	642914	15.0	N	4.0	E	4	SE	NE	SE	EXEMPT	WP	D	1/1/1966	98	20	6					COOK	
	579163	15.0	N	4.0	E	4	SE	NE	SE	EXEMPT	WP	D	2/12/2000	150	75	6	16	16		X	SERONDE	
	592888	15.0	N	4.0	E	4	SE	NE	SE	EXEMPT	WP	D									NITSCHKE	Y
62	618155	15.0	N	4.0	E	4	SE	SE		NON-EXEMPT	WP	IRR,S,D	6/1/1962	475	19	6	400	400	0		CHUPP,R D	
	621154	15.0	N	4.0	E	4	SE	SE		EXEMPT	WP	D									MARTIN	
	631520	15.0	N	4.0	E	4	SE	SE		EXEMPT	WP	D	1/1/1957	95	65	6	15	15	0		MCMENAMIN,E M	
	649895	15.0	N	4.0	E	4	SE	SE		EXEMPT	WP	D	4/13/1968	72	36	6	14	14	0		COLLLINS FAMILY CHIL,D	
	649896	15.0	N	4.0	E	4	SE	SE		EXEMPT	WP	D	5/3/1965	300	27	6	25	25	0		COLLINS FAMILY CHILD,	
	800718	15.0	N	4.0	E	4	SE	SE		EXEMPT	WP	D		400	180	8	30	30	0		SELAN,J R	
	646110	15.0	N	4.0	E	4	SE	SE		EXEMPT	WP	D	1/1/1962	120	20	6	20	20	0		JOHNSTON,M E	
	543544	15.0	N	4.0	E	4	SE	SE	SW	EXEMPT	WP	D,IRR	5/10/1994	60	40	6				X	MCMENAMIN, EMMITT,	
	651427	15.0	N	4.0	E	4	SE	SE	SW	EXEMPT	WP	D	1/1/1968	108	38	6	5	5	0		MC MENAMIN,E	
	643591	15.0	N	4.0	E	4	SE	SE	SW	EXEMPT	WP	D	6/15/1952								MCMENAMIN,M C	
	631490	15.0	N	4.0	E	4	SE	SE	SW	EXEMPT	WP	IND	3/10/1979	230	32	6	20	20	0		KEMPNER	
	569306	15.0	N	4.0	E	4	SE	SE	SW	EXEMPT	WP	D	4/24/1999	170	60	6				X	KEMPNER	

Source: ADWR 55- Well Registry, 2005

APPENDIX A
ADWR WELL INVENTORY

Map ID	ADWR Reg.	T		R		Sect	Acre160	Acre 40	Acre 10	Well Type	Well Use	Water Use	Date	Depth	WL	Width	Pump Rate	Test Rate	DD	Drill Log	Owner	Cancel
	505546	15.0	N	4.0	E	4	SE	SE	SE	EXEMPT	WP	D	6/3/1983	80	21	8	16	16		X	FREDERICKS,N	
	634561	15.0	N	4.0	E	4	SE	SE	SE	EXEMPT	WP	D,IRR	1/1/1952	82		6					SNYDER	
	646956	15.0	N	4.0	E	4	SE	SE	SE	EXEMPT	WP	D		96	40	6	9	9	0		KEITH, JUDITH,	
	648990	15.0	N	4.0	E	4	SE	SE	SE	EXEMPT	WP	D	12/1/1971	103	32	6	20	20	0		SCOTT	
	505424	15.0	N	4.0	E	4	SE	SE	SE	EXEMPT	WP	D	5/27/1983	100	38	8	20	20		X	RAY,R N	
	649118	15.0	N	4.0	E	4	SE	SE	SE	EXEMPT	WP	D	4/19/1977	110	50	6	10	10	0		BOGRAN	
	802516	15.0	N	4.0	E	5	SE	NE		EXEMPT	WP	D		186							EVANS,H L	
	557393	15.0	N	4.0	E	6	NE	NE	NE	MON/PIEZ	PIEZ	T									DREXLER DEVLPMNT INC,	
63	556626	15.0	N	4.0	E	6	NW	NE	SE	NON-EXEMPT	WP	IRR	12/26/1996	500	150	14				X	VERDE SANTA FE ENTERPRISE	
	557392	15.0	N	4.0	E	6	NW	NW	NW	MON/PIEZ	PIEZ	T									DREXLER DEVLPMNT INC,	
64	533124	15.0	N	4.0	E	6	SW	NW	NW	NON-EXEMPT	WP	IRR	9/16/1992	821			350	350		X	CITY OF COTTONWOOD	
	557391	15.0	N	4.0	E	6	SE	SE	SE	MON/PIEZ	PIEZ	T									DREXLER DEVLPMNT INC,	
	535169	15.0	N	4.0	E	7	NE	SW	SW	EXEMPT	WP	D	5/11/1992	300	190	6				X	SCHULTZ, PETE,	
	557524	15.0	N	4.0	E	7	NE	SW	SE	EXEMPT	WP	D	5/24/1996	170	75	6	10	12		X	TEWEANGER	
	645469	15.0	N	4.0	E	7	NW	SW		EXEMPT	WP	D	1/1/1930	170		6	18	18	0		PHILLIPS,J L	
	645470	15.0	N	4.0	E	7	NW	SW		EXEMPT	WP	D	1/1/1920	270		8	2	2	0		PHILLIPS,J L	
	579635	15.0	N	4.0	E	7	NW	SW	NE	EXEMPT	WP	D	8/8/2000	200	60	6				X	SMITH	
	553409	15.0	N	4.0	E	7	NW	SW	NW	EXEMPT	WP	D	1/9/1996	220	106	6				X	MROTEK	
	524907	15.0	N	4.0	E	7	NW	SW	NW	EXEMPT	WP	D	7/29/1989	245	175	6	30	35		X	LIVESAY, FRITZ,	
	545906	15.0	N	4.0	E	7	NW	SW	NW	EXEMPT	WP	D,IRR	9/25/1995	240	100	6				X	BAUGH, LARRY,	
	901606	15.0	N	4.0	E	7	NW	SW	NW	EXEMPT		D		200		6				X	MITCHELL	
	598058	15.0	N	4.0	E	7	NW	SW	NW	EXEMPT	WP	D,S	6/5/2003	240	110	6	20	20	0	X	BAUGH	
	544091	15.0	N	4.0	E	7	NW	SW	SW	EXEMPT	WP	D	7/9/1994	205	87	6	16	16		X	BOOK	
	537660	15.0	N	4.0	E	7	NW	SW	SE	EXEMPT	WP	D	7/15/1993	215	90	7	24	24	0	X	RUE, GENEVIEVE,	
	575021	15.0	N	4.0	E	7	NW	SW	SE	EXEMPT	WP	D	8/24/1999	250	80	6				X	POLK	
	576218	15.0	N	4.0	E	7	NW	SW	SE	EXEMPT	ABAN	D	8/2/1999	200	53	6				X	CARRILLO	Y
	578938	15.0	N	4.0	E	7	NW	SW	SE	EXEMPT	WP	D	2/1/2000	200	120	5				X	PEREZ	
	579238	15.0	N	4.0	E	7	NW	SW	SE	EXEMPT	WP	D	2/2/2000	200	120	5				X	CARRILLO	
	643840	15.0	N	4.0	E	7	SW	SW		EXEMPT	WP	IRR					34	34	0		COPPER	
	643841	15.0	N	4.0	E	7	SW	SW		EXEMPT	WP	D	3/1/1972				25	25	0		COPPER	
	644655	15.0	N	4.0	E	7	SW	SW		EXEMPT	WP	D				6					KESTER,A B	
	647633	15.0	N	4.0	E	7	SW	SW	NE	EXEMPT	WP	S		100	85	8	15	15	0		WIMMER	
	647632	15.0	N	4.0	E	7	SW	SW	NE	EXEMPT	WP			165	30	6	15	15	0		GUNDELACH	
	805667	15.0	N	4.0	E	7	SW	SE		EXEMPT	WP	D,S									CHENEWETH, J EDWIN,	
	528091	15.0	N	4.0	E	7	SE	SE	NE	EXEMPT	WP	D	5/14/1990	230	80	7	10	15	0	X	HICKS & HENKE	
	606973	15.0	N	4.0	E	9				EXEMPT	WP	D	3/20/1968	111	20	6	14	14	0		WHALEY,C R	
65	802688	15.0	N	4.0	E	9				NON-EXEMPT	WP	D	10/1/1961		601	6					MEITZ	
66	802767	15.0	N	4.0	E	9				NON-EXEMPT	WP	D		180		6					PENOYER, FRED,	
	803398	15.0	N	4.0	E	9				EXEMPT	WP	D	1/1/1975								CLEVELAND, KATHERINE,P	
	647482	15.0	N	4.0	E	9	NE			EXEMPT	WP	D		95	30	6					KICKBUSH, CATHERINE,M	
	632829	15.0	N	4.0	E	9	NE			EXEMPT	WP	D	8/1/1973	219	47	6					LOY,R G	
	645691	15.0	N	4.0	E	9	NE			EXEMPT	WP	D		80			4	4	0		PRIEST,F L	
	647483	15.0	N	4.0	E	9	NE			EXEMPT	WP	D		112	18	6					ROUSH,R R	
	647844	15.0	N	4.0	E	9	NE			EXEMPT	WP	D		140	35	6	35				MCGINNIS,E E	
	647840	15.0	N	4.0	E	9	NE			EXEMPT	WP	D,IRR		210		6					HEYDORN,V E	
	601501	15.0	N	4.0	E	9	NE	NE		EXEMPT	WP	D	2/5/1974	105		6	20	20	0		FORTNEY, CAROL,O	
	640650	15.0	N	4.0	E	9	NE	NE		EXEMPT	WP	D	10/12/1973	125	60	6	30	30	0		EGLI, SAM DAVID,	
	641903	15.0	N	4.0	E	9	NE	NE		EXEMPT	WP	D	1/1/1980	110		6					TUPPER	
	641904	15.0	N	4.0	E	9	NE	NE		EXEMPT	WP	D									TUPPER	
	643982	15.0	N	4.0	E	9	NE	NE		EXEMPT	WP	D	8/1/1967	105	32	6	10	10	0		CARNEY	
	643983	15.0	N	4.0	E	9	NE	NE		EXEMPT	WP	D	4/14/1982	114	18	6	15	15	0		CARNEY	
	511971	15.0	N	4.0	E	9	NE	NE	NE	EXEMPT	WP	D									RAMSEY,C V	Y
	637498	15.0	N	4.0	E	9	NE	NE	NE	EXEMPT	WP	D		110		6					BRANVOLD,N	
	603410	15.0	N	4.0	E	9	NE	NE	NE	EXEMPT	WP	D	1/1/1961	100	24	6	10	10	0		BANCAL INVESTMENT,	
	623288	15.0	N	4.0	E	9	NE	NE	NE	EXEMPT	WP	D		107	50	6	10	10	0		ALLEN & HUDSON	

Source: ADWR 55- Well Registry, 2005

APPENDIX A
ADWR WELL INVENTORY

Map ID	ADWR Reg.	T		R		Sect	Acre160	Acre 40	Acre 10	Well Type	Well Use	Water Use	Date	Depth	WL	Width	Pump Rate	Test Rate	DD	Drill Log	Owner	Cancel
	623289	15.0	N	4.0	E	9	NE	NE	NE	EXEMPT	WP	D		60	50	6	10	10	0		ALLEN & HUDSON	
	637499	15.0	N	4.0	E	9	NE	NE	NE	EXEMPT	WP	D	1/1/1974	110		6					BRANVOLD,N	
	637500	15.0	N	4.0	E	9	NE	NE	NE	EXEMPT	WP	D		110		6					DURKEE	
	637528	15.0	N	4.0	E	9	NE	NE	NE	EXEMPT	WP	D		80		6					SHUMWAY, JAMES,W	
	646181	15.0	N	4.0	E	9	NE	NE	NE	EXEMPT	ABAN	NONE									YAVAPAI COUNTY PUBLIC WOR	Y
	647178	15.0	N	4.0	E	9	NE	NE	NE	EXEMPT	WP	D,IRR	1/1/1956	95	30	6	12	12	0		OURSLAND, JEFFREY,A	
	647344	15.0	N	4.0	E	9	NE	NE	NE	EXEMPT	WP	D	9/1/1960	90	27	6	12	12	0		SCATURRO	
	648109	15.0	N	4.0	E	9	NE	NE	NE	EXEMPT	WP	D	1/1/1968	150	19		20	20	0		CORN,M F	
	802467	15.0	N	4.0	E	9	NE	NE	NE	EXEMPT	WP	D,IRR	10/11/1967	90	30	6	15	15	0		HILLS,R E	
	524975	15.0	N	4.0	E	9	NE	NE	NE	EXEMPT	WP	D	7/1/1989	110	21	6	10	10		X	JOHNSON	
	802615	15.0	N	4.0	E	9	NE	NE	NE	EXEMPT	WP	D	9/12/1957	90	27	6	12	12	0		MANION,B	
	648108	15.0	N	4.0	E	9	NE	NE	NE	EXEMPT	WP	D	1/1/1970	102	32	6	20	20	0		FORTNEY,L W	
	623287	15.0	N	4.0	E	9	NE	NE	NE	EXEMPT	WP	D		150	50	6	10	10	0		WALTERS, WILLIAM,H	
	583901	15.0	N	4.0	E	9	NE	NE	NW	EXEMPT	WP	COM		115	50	6				X	YAVAPAI COUNTY FLOOD CONT	
	808572	15.0	N	4.0	E	9	NE	NE	NW	EXEMPT	WP	D					30				DOORLY	
	543920	15.0	N	4.0	E	9	NE	NE	SW	EXEMPT	WP	D	6/15/1994	115	40	6	17	17	0	X	SCATURO, ROMANO,	
	629563	15.0	N	4.0	E	9	NE	NE	SE	EXEMPT	WP	D	7/8/1967	105	40	6	20	20	0		ROBERTS	
	645222	15.0	N	4.0	E	9	NE	NE	SE	EXEMPT	WP	D	8/1/1979	160	45	6					WINSLOW,F O	
	591159	15.0	N	4.0	E	9	NE	SW	NW	EXEMPT	WP	D	3/4/2002	125	70	6				X	WINSLOW	
	631176	15.0	N	4.0	E	9	NE	SE		EXEMPT	WP	D	1/1/1970			6	10				GRAFE	
	646116	15.0	N	4.0	E	9	NE	SE	NE	EXEMPT	WP	D		70	29	6	11	11	0		MULBERRY PARK LLC	
	558419	15.0	N	4.0	E	9	NE	SE	NE	EXEMPT	WP	D	7/16/1996	125	30	6				X	LIVINGSTON	
67	603609	15.0	N	4.0	E	9	NE	SE	NE	NON-EXEMPT	WP	IRR,D	12/29/1972	303	48	8	90	90	0		WILBANKS, RONALD,L	
68	623400	15.0	N	4.0	E	9	NE	SE	NE	NON-EXEMPT	WP	D,IRR	11/1/1976	375		8	60	60	0		SCHUERMAN	
	644173	15.0	N	4.0	E	9	NE	SE	NE	EXEMPT	WP	D	11/1/1977	155		6	28	28	0		SCHUERMAN	
	645559	15.0	N	4.0	E	9	NE	SE	NE	EXEMPT	WP	D	9/13/1977	167	47	6	20	20	0		HOLLINGSHEAD,.G L	
	086898	15.0	N	4.0	E	9	NE	SE	NE	EXEMPT	WP	D	1/30/1981	140	58	6	20	20	0	X	COVEL	
	901484	15.0	N	4.0	E	9	NE	SE	NW	EXEMPT		D		242	31	6				X	MULBERRY PARK, LLC	
	645558	15.0	N	4.0	E	9	NE	SE	NW	EXEMPT	WP	D	3/31/1969	152	45	8	35	35	0		HOLLINGSHEAD,G L	
	806820	15.0	N	4.0	E	9	NE	SE	NW	EXEMPT	WP	D	12/31/1959	60		6	40				CLARK, DALLAS,	
	631317	15.0	N	4.0	E	9	NE	SE	SW	EXEMPT	WP	D	9/1/1975	205	50	8	20	20	0		RUPE,W S	
	807036	15.0	N	4.0	E	9	NE	SE	SW	EXEMPT	WP	D	12/31/1978	220	60	6	16				MCCORMICK	
	201438	15.0	N	4.0	E	9	NE	SE	SW	EXEMPT	WP	D		165	49	6				X	TONSICH	
	517146	15.0	N	4.0	E	9	NE	SE	SE	EXEMPT	WP	D	3/21/1987	91	25	6	20	20		X	BADGER, DARREL,	
	645419	15.0	N	4.0	E	9	NW	NW	SW	EXEMPT	WP	D	1/1/1976								SWEENEY	
69	618416	15.0	N	4.0	E	9	SE	NE		NON-EXEMPT	WP	IRR		300		2	25	25	0		SILVESTRO	
	529281	15.0	N	4.0	E	9	SE	NE	NE	EXEMPT	WP	D	9/20/1990	120	33	6	20	20		X	BADGER, EDNA,	
	644402	15.0	N	4.0	E	9	SE	NE	NE	EXEMPT	WP	D,S,IRR		128	70	6	35	35	0		ST MICHAELS CHAPEL,	
	644740	15.0	N	4.0	E	9	SE	NE	NE	EXEMPT	WP	D,S,IRR	10/24/1964	305	37	8	25	25	0		LOY,L F	
	516290	15.0	N	4.0	E	9	SE	NE	NE	EXEMPT	WP	D	1/8/1987	110	20	6	15	15		X	CANADA	
	539765	15.0	N	4.0	E	9	SE	NE	NE	EXEMPT	WP	D	1/21/1994	80	17	6				X	CANADA	
	502969	15.0	N	4.0	E	9	SE	NE	NW	EXEMPT	WP	D	6/1/1982	148	19	6				X	POMEROY	
	511149	15.0	N	4.0	E	9	SE	NE	NW	EXEMPT	WP	D	6/14/1985	102	42	6	14	14		X	LOY,J E	
	511970	15.0	N	4.0	E	9	SE	NE	NW	EXEMPT	WP	D	8/26/1985	160	65	6	20	156	0	X	STEELE,W J	
	512459	15.0	N	4.0	E	9	SE	NE	NW	EXEMPT	WP	D	9/30/1985	112	56	6	14	10		X	LOY, BEVERLY,	
	515721	15.0	N	4.0	E	9	SE	NE	NW	EXEMPT	WP	D	10/7/1986	160	40	6	15	15		X	NUSSBAUM	
70	802794	15.0	N	4.0	E	9	SE	NE	NW	NON-EXEMPT	WP	D,S,IRR	1/26/1977	300	80	8	25	25	0		ERVIN,K D	
	526903	15.0	N	4.0	E	9	SE	NE	NW	EXEMPT	WP	D	5/19/1990	150	60	6	15	15		X	PERRIN, NAOMI,	
	542425	15.0	N	4.0	E	9	SE	NE	NW	EXEMPT	WP	D	2/21/1994	126	45	6	15	15		X	STEELE, WILLIAM,J	
	534755	15.0	N	4.0	E	9	SE	NE	SW	EXEMPT	WP	D	4/17/1992	300	198	6	10	10		X	KARBER, CAROL,	
	544788	15.0	N	4.0	E	9	SE	NE	SW	EXEMPT	WP	D	11/3/1994	200	100	6	10	10		X	MCALISTER, JOYCE,	
	618417	15.0	N	4.0	E	9	SE	NE	SE	EXEMPT	WP	D		175		16	25	25	0		COLES	
	632107	15.0	N	4.0	E	9	SE	NE	SE	EXEMPT	WP	D	10/14/1968	162	60	6	20	20	0		FINCHER,H H	
	807039	15.0	N	4.0	E	9	SE	SE	NE	EXEMPT	WP	D	12/31/1979	130	80	6	20				BIANCONI, WILLIAM,J	
	803449	15.0	N	4.0	E	9	SE	SE	NW	EXEMPT	WP	D	1/1/1962				30				PETERS, JUSTINE,A	

Source: ADWR 55- Well Registry, 2005

APPENDIX A
ADWR WELL INVENTORY

Map ID	ADWR Reg.	T		R		Sect	Acre160	Acre 40	Acre 10	Well Type	Well Use	Water Use	Date	Depth	WL	Width	Pump Rate	Test Rate	DD	Drill Log	Owner	Cancel
71	803448	15.0	N	4.0	E	9	SE	SE	SW	NON-EXEMPT	WP	IRR,D,S	1/1/1962				30				PETERS, JUSTINE,A	
	649741	15.0	N	4.0	E	10				EXEMPT	WP	D									MORRISON	
	085537	15.0	N	4.0	E	10	NE	NE	NE	EXEMPT	WP	D									HELSING,V M	Y
	085538	15.0	N	4.0	E	10	NE	NE	NE	EXEMPT	WP	D									HELSING,V M	Y
	501396	15.0	N	4.0	E	10	NE	NE	NE	EXEMPT	WP	D		200							HELSING,V M	Y
	501397	15.0	N	4.0	E	10	NE	NE	NE	EXEMPT	WP	D		200							HELSING,V	Y
	501398	15.0	N	4.0	E	10	NE	NE	NE	EXEMPT	WP	D		200							HELSING,V M	Y
	085536	15.0	N	4.0	E	10	NE	NE	NE	EXEMPT	WP	D									HELSING,V M	Y
	599481	15.0	N	4.0	E	10	NE	NE	NE	EXEMPT	WP	D	8/13/2003	205	120	7	15	15		X	GONZALEZ	
	900105	15.0	N	4.0	E	10	NE	NE	NE	EXEMPT		D	4/19/2004	205	95	6	12	12		X	MOREHOUSE	
	582791	15.0	N	4.0	E	10	NE	NE	NW	EXEMPT	WP	D	8/28/2000	180	125	6				X	JANE CHANEY RITTER REVOCA	
	562655	15.0	N	4.0	E	10	NE	NE	NW	EXEMPT	WP	D	6/10/1997	185	110	6				X	SMITH	
	583588	15.0	N	4.0	E	10	NE	NE	NW	EXEMPT	WP	D	2/10/2001	185	90	6				X	BROWN	
	596666	15.0	N	4.0	E	10	NE	NE	NW	EXEMPT	WP	D,S		175	115	6				X	JOHNSON	
	592474	15.0	N	4.0	E	10	NE	NE	SW	EXEMPT	WP	D	7/2/2002	173	120	6				X	MC CLINTOCK	
	550785	15.0	N	4.0	E	10	NE	NE	SW	EXEMPT	WP	D	8/29/1995	180	105	6				X	BABEL	
	902284	15.0	N	4.0	E	10	NE	NE	SW	EXEMPT		D		170	120	6				X	BOYD	
	566656	15.0	N	4.0	E	10	NE	NE	SW	EXEMPT	WP	D		165	110	6	10	10		X	JOHNSON	
	588074	15.0	N	4.0	E	10	NE	NE	SW	EXEMPT	WP	D	8/22/2001	170	120	6	12	12		X	HANEY	
	531795	15.0	N	4.0	E	10	NE	NE	SE	EXEMPT	WP	D									KINARD, SAM,A	Y
	577807	15.0	N	4.0	E	10	NE	NE	SE	EXEMPT	WP	D	8/3/2000	170	115	6				X	CANON	
	590666	15.0	N	4.0	E	10	NE	NE	SE	EXEMPT	WP	D	1/30/2002	170	120	6	15	15		X	DEVANEY	
	596711	15.0	N	4.0	E	10	NE	NE	SE	EXEMPT	WP	D,S									LAWTHER	Y
	565123	15.0	N	4.0	E	10	NE	NW	NE	EXEMPT	WP	D	12/21/1997	300	128	6				X	KUMANGA	
	584796	15.0	N	4.0	E	10	NE	NW	NE	EXEMPT	WP	D	1/8/2001	185	145	6				X	SHAMRELL	
	592885	15.0	N	4.0	E	10	NE	NW	NE	EXEMPT	WP	D		185	145	6				X	NEBE	
	563630	15.0	N	4.0	E	10	NE	NW	NW	EXEMPT	WP	D	8/9/1997	185	130	6	10	10		X	HANEY, JAMES,	
	553770	15.0	N	4.0	E	10	NE	NW	NW	EXEMPT	WP	D	2/16/1996	165	105	6	12	12		X	APPLETON	
	594786	15.0	N	4.0	E	10	NE	NW	NW	EXEMPT	WP	D	3/28/2003	180	110	6				X	SHARKEY	
	594739	15.0	N	4.0	E	10	NE	NW	SW	EXEMPT	WP	D	9/20/2002	180	120	6				X	BODNAR	
	596639	15.0	N	4.0	E	10	NE	NW	SW	EXEMPT	WP	D	4/30/2003	172	106	7	12	4		X	STARKEY	
	900702	15.0	N	4.0	E	10	NE	NW	SW	EXEMPT		D		185	107	6				X	HEALY	
	545609	15.0	N	4.0	E	10	NE	NW	SE	EXEMPT	WP	D,IRR	12/14/1994	185	120	6				X	MCCARTY, LARYY,A	
	552176	15.0	N	4.0	E	10	NE	NW	SE	EXEMPT	WP	D	10/25/1995	185	100	6	18	20		X	FEIST, DENNIS,	
	572795	15.0	N	4.0	E	10	NE	NW	SE	EXEMPT	WP	D	4/20/1999	190	135	6				X	ADAMS JR	
	577692	15.0	N	4.0	E	10	NE	NW	SE	EXEMPT	WP	D	12/26/1999	186	115	6	10	10		X	RAY	
	585515	15.0	N	4.0	E	10	NE	NW	SE	EXEMPT	WP	D	3/16/2001	180	120	6				X	ENGLER	
	586041	15.0	N	4.0	E	10	NE	NW	SE	EXEMPT	WP	D	3/22/2001	180	120	6				X	OSBORNE	
	902033	15.0	N	4.0	E	10	NE	SW	NE	EXEMPT		D									TURMES ENTERPRISES, LLC	
	578719	15.0	N	4.0	E	10	NE	SW	NE	EXEMPT	WP	D	12/30/1999	183	115	6				X	WEDER	
	592475	15.0	N	4.0	E	10	NE	SW	NE	EXEMPT	WP	D	9/27/2002	175	120	6	15	15		X	AMMERMAN	
	595140	15.0	N	4.0	E	10	NE	SW	NW	EXEMPT	WP	D									HEATH	Y
	558122	15.0	N	4.0	E	10	NE	SW	SW	EXEMPT	WP	D	9/24/1996	167	85	6	10	10		X	NELSON	
	563276	15.0	N	4.0	E	10	NE	SW	SW	EXEMPT	WP	D,IRR,S	7/12/1997	178	103	6				X	VAJNAR & PATTIE	
	901519	15.0	N	4.0	E	10	NE	SW	SE	EXEMPT		D	2/3/2005	193	110	6				X	HENDRIX	
	569507	15.0	N	4.0	E	10	NE	SW	SE	EXEMPT	WP	D	8/8/1998	195	125	6	18	22		X	BILANT	
	599624	15.0	N	4.0	E	10	NE	SW	SE	EXEMPT	WP	D									PETERSON	Y
	900069	15.0	N	4.0	E	10	NE	SE	NE	EXEMPT		D	3/10/2004	205	145	6	15	15		X	IHRMAN	
	900767	15.0	N	4.0	E	10	NE	SE	NE	EXEMPT		D		205	120	6				X	TAFFORA	
	598690	15.0	N	4.0	E	10	NE	SE	NW	EXEMPT	WP	D,S	7/25/2003	180	116	7				X	NELSON	
	200271	15.0	N	4.0	E	10	NE	SE	NW	EXEMPT	WP	D		166	115	7				X	TURMES	
	901018	15.0	N	4.0	E	10	NE	SE	NW	EXEMPT		D	12/26/2004	190	121	6				X	BUTLER	
	085003	15.0	N	4.0	E	10	NE	SE	SW	EXEMPT	WP	D	1/1/1980	178	80	6	15	15			HUFFAKER,C	
	901981	15.0	N	4.0	E	10	NE	SE	SE	EXEMPT		D	5/27/2005	366	190	6				X	BENTLAGE	
	608977	15.0	N	4.0	E	10	NW			EXEMPT	WP	D	5/1/1965	135	6	6	35	35	0		TAYLOR, BENNY,F	

Source: ADWR 55- Well Registry, 2005

APPENDIX A
ADWR WELL INVENTORY

Map ID	ADWR Reg.	T		R		Sect	Acre160	Acre 40	Acre 10	Well Type	Well Use	Water Use	Date	Depth	WL	Width	Pump Rate	Test Rate	DD	Drill Log	Owner	Cancel
72	608978	15.0	N	4.0	E	10	NW			NON-EXEMPT	WP	IRR		60	6	6	75	75	0		TAYLOR, BENNY,F	
	641034	15.0	N	4.0	E	10	NW			EXEMPT	WP	D		60							BARRETT,G	
	641389	15.0	N	4.0	E	10	NW			EXEMPT	WP	D,IRR	1/1/1945	62	12	6					ANDERSON	
	649193	15.0	N	4.0	E	10	NW			EXEMPT	WP	D		180	70	6	15	15	0		MACKLER	
	649485	15.0	N	4.0	E	10	NW			EXEMPT	WP	D		70	20	6					ROBINSON,J B	
73	800204	15.0	N	4.0	E	10	NW			NON-EXEMPT	WP	D,IRR									BARTOSH	
	517007	15.0	N	4.0	E	10	NW	NE	NE	EXEMPT	WP	D	3/10/1987	172	73	6	25	25		X	BARTOSH	
	207300	15.0	N	4.0	E	10	NW	NE	NE	EXEMPT	WP	D									CHAMBERLAIN	
	641772	15.0	N	4.0	E	10	NW	NE	SW	EXEMPT	WP	D	6/28/1971	144	12	6	8	8	0		HICKEY,J W	
	647319	15.0	N	4.0	E	10	NW	NE	SW	EXEMPT	WP	D	11/9/1973	155	32	6	8	8	0		MCALISTER, WALTER,H	
	523795	15.0	N	4.0	E	10	NW	NE	SW	EXEMPT	ABAN	NONE	4/16/1986	100	75	5	30	4		X	ELMER	Y
	551642	15.0	N	4.0	E	10	NW	NE	SE	EXEMPT	WP	D	10/5/1995	190	110	6	10	15		X	BURNS AKA CARPENTER	
	572950	15.0	N	4.0	E	10	NW	NE	SE	EXEMPT	WP	D	4/22/1999	170	120	6	10	10		X	THORNE	
	901556	15.0	N	4.0	E	10	NW	NE	SE	EXEMPT		D		174	135	6				X	THORNE	
	579313	15.0	N	4.0	E	10	NW	NE	SE	EXEMPT	WP	D	2/18/2000	180	120	6				X	TIFFANY	
	630953	15.0	N	4.0	E	10	NW	NW		EXEMPT	WP	D	11/14/1973	100	12	6	15	15	0		SIMMONS	
	647822	15.0	N	4.0	E	10	NW	NW		EXEMPT	WP	D		40	12	8	10	10	0		KNIGHT	
	651285	15.0	N	4.0	E	10	NW	NW		EXEMPT	WP	D									BECK	
	802563	15.0	N	4.0	E	10	NW	NW		EXEMPT	WP	D	5/7/1974	92	9	6					BROWNING,H	
	646141	15.0	N	4.0	E	10	NW	NW		EXEMPT	WP	D									ZINGG,D L	
	641950	15.0	N	4.0	E	10	NW	NW	NE	EXEMPT	WP	D	1/1/1953	96	4	6	18	18	0		HALL, LEON & PEARL,	
	572649	15.0	N	4.0	E	10	NW	NW	NE	EXEMPT	WP	D	6/1/1999	220	150	6				X	MCCABE	
	644515	15.0	N	4.0	E	10	NW	NW	NW	EXEMPT	WP	IRR,D	6/6/1980	110	15	6	20	20	0		CRICK	
	510899	15.0	N	4.0	E	10	NW	NW	NW	EXEMPT	WP	D	6/30/1985	100	6	6				X	SCHAEFFER	
	501469	15.0	N	4.0	E	10	NW	NW	SW	EXEMPT	WP	D	4/10/1982	60	12	7	10	10		X	HICKEY,J W	
	644290	15.0	N	4.0	E	10	NW	NW	SW	EXEMPT	WP	D	1/1/1977			8					SHEPARD,R	
	648106	15.0	N	4.0	E	10	NW	NW	SW	EXEMPT	WP	D	2/3/1976	100	8						RABY, GERALD & E.,	
	648096	15.0	N	4.0	E	10	NW	NW	SW	EXEMPT	WP	D		110	6	6	10	10	0		REBER	
	628041	15.0	N	4.0	E	10	NW	NW	SW	EXEMPT	WP	D,S	6/18/1975	85	15	6	10	10	0	X	JOELS	
	647504	15.0	N	4.0	E	10	NW	NW	SE	EXEMPT	WP	D	10/1/1972	70	11	6	10	10	0		RANK,W D	
	803249	15.0	N	4.0	E	10	NW	NW	SE	EXEMPT	WP	D,IRR	7/1/1973	100	80	6	30				SEVIER, JOHN,	
	640833	15.0	N	4.0	E	10	NW	SW	NW	EXEMPT	WP	D	12/31/1972	80	10	6	30	30	0		SHOEMAKER, GEORGE,G	
	583268	15.0	N	4.0	E	10	NW	SW	NW	EXEMPT	WP	D		120	25					X	FRONTIERE	N
	594969	15.0	N	4.0	E	10	NW	SW	SW	EXEMPT	WP	D		200	20	6				X	FRONTIERE	
	201178	15.0	N	4.0	E	10	NW	SW	SW	EXEMPT	WP	D		140	72	6				X	SCOTT	
	630978	15.0	N	4.0	E	10	NW	SW	SE	EXEMPT	WP	D	1/1/1971	125	60	6	25	25	0		SCHENCK DBA,D V	
	630979	15.0	N	4.0	E	10	NW	SW	SE	EXEMPT	WP	D		70	48	6	10				SCHENCK DBA,D V	
	585496	15.0	N	4.0	E	10	NW	SW	SE	EXEMPT	WP	D		202	23	6		15		X	FRONTIERE	N
	900879	15.0	N	4.0	E	10	NW	SE	NE	EXEMPT		D		190	115	6				X	CUSTOM HOMES	
	532024	15.0	N	4.0	E	10	NW	SE	NW	EXEMPT	WP	D	7/11/1991	185	90	6				X	PORTANOVA	
	603195	15.0	N	4.0	E	10	NW	SE	SW	EXEMPT	WP	D	11/21/1973	120	72	6	20				PORTER, STEPHEN,W	
	640793	15.0	N	4.0	E	10	NW	SE	SW	EXEMPT	WP	D	8/2/1971	80	10	6	25	25	0		PENHALLEGON, ARLENE,D	
	532023	15.0	N	4.0	E	10	NW	SE	SW	EXEMPT	WP	D	7/17/1991	205	80	6				X	PORTANOVA	
	542392	15.0	N	4.0	E	10	NW	SE	SW	EXEMPT	WP	D	2/17/1994	153	95	6				X	HILLTOP RARTNERS,	
	538650	15.0	N	4.0	E	10	NW	SE	SE	EXEMPT	WP	D,IRR	6/12/1993	181	80	6	16	16		X	DOWNING	
	522088	15.0	N	4.0	E	10	NW	SE	SE	EXEMPT	WP	D	8/31/1988	103	21	6	20	20		X	HARRINGTON, HERALD,	
	642839	15.0	N	4.0	E	10	SW			EXEMPT	WP	D		100	30	6	5	5	0		RAY ETAL,J H	
	620423	15.0	N	4.0	E	10	SW			EXEMPT	WP	D									TOMERLIN,M	
	648774	15.0	N	4.0	E	10	SW			EXEMPT	WP	D,S		50	30		10	10	0		ETLING,A	
	647282	15.0	N	4.0	E	10	SW			EXEMPT	WP	D		160							SEEBER	
74	612345	15.0	N	4.0	E	10	SW	NE	NE	NON-EXEMPT	WP	D	1/1/1971	73	53	6					FEDERBUSH	
	632756	15.0	N	4.0	E	10	SW	NE	NE	EXEMPT	WP	D	1/1/1971	130	18	8	25	25	0		HARRINGTON	
	644737	15.0	N	4.0	E	10	SW	NE	NE	EXEMPT	WP	D			20	6	15	15	0		LOY,R A	
75	802783	15.0	N	4.0	E	10	SW	NE	NE	NON-EXEMPT	WP	D									OURSLAND, JEFFREY,A	
	590975	15.0	N	4.0	E	10	SW	NE	NE	EXEMPT	WP	D									SOUTH	Y

Source: ADWR 55- Well Registry, 2005

APPENDIX A
ADWR WELL INVENTORY

Map ID	ADWR Reg.	T		R		Sect	Acre160	Acre 40	Acre 10	Well Type	Well Use	Water Use	Date	Depth	WL	Width	Pump Rate	Test Rate	DD	Drill Log	Owner	Cancel
	593716	15.0	N	4.0	E	10	SW	NE	NE	EXEMPT	WP	D									AYER	Y
	647715	15.0	N	4.0	E	10	SW	NE	SW	EXEMPT	WP	D	1/1/1971	180	50	6	10	10	0		ROSSITER	
	807240	15.0	N	4.0	E	10	SW	NE	SW	EXEMPT	WP	D	12/31/1968								KALLER, JERRY,R	
	511121	15.0	N	4.0	E	10	SW	NE	SW	EXEMPT	WP	D	5/20/1985	56	18	6	3	3		X	ZUM MALLEN, DONALD,	
	572433	15.0	N	4.0	E	10	SW	NE	SW	EXEMPT	WP	D	3/16/1999	180	60	6	18	18		X	CUNNINGHAM	
	573354	15.0	N	4.0	E	10	SW	NE	SW	EXEMPT	WP	D	6/1/1999	170	30	6	16	16	0	X	DONAHUE	
	575492	15.0	N	4.0	E	10	SW	NE	SW	EXEMPT	WP	D	7/21/1999	170	35	6				X	TROXELL	
	086167	15.0	N	4.0	E	10	SW	NE	SE	EXEMPT	WP	D	1/1/1980	260		6	14	14			JONAS,C	
	500816	15.0	N	4.0	E	10	SW	NE	SE	EXEMPT	WP	D	1/1/1981	200	104	8				X	KROGH,B	
	623344	15.0	N	4.0	E	10	SW	NE	SE	EXEMPT	WP	D	1/1/1979	206		6	20				BREWSTER	
	803123	15.0	N	4.0	E	10	SW	NE	SE	EXEMPT	WP	D	5/14/1980	203	160	6	25				HOFFMAN, NORMAN,B	
	523587	15.0	N	4.0	E	10	SW	NE	SE	EXEMPT	WP	D	2/19/1989	230	200	7	10	10		X	HARDER, DONALD,	
	650294	15.0	N	4.0	E	10	SW	NE	SE	EXEMPT	WP	D		164							WHITNEY/FLAGG	
	589369	15.0	N	4.0	E	10	SW	NE	SE	EXEMPT	WP	D	1/1/2002	210	65	6				X	STEPHENS	
	647516	15.0	N	4.0	E	10	SW	NW		EXEMPT	WP	D,S,IRR	1/1/1940	200	50	6	24	24	0		KOVACOVICH,J	
	599622	15.0	N	4.0	E	10	SW	NW	NE	EXEMPT	WP	D		186	120	6				X	JJ MCCLANAHAN CONST OF SE	
	561531	15.0	N	4.0	E	10	SW	NW	NW	EXEMPT	WP	D	5/3/1997	242	40	6				X	INDIAN CREEK RANCH LLC	
	644736	15.0	N	4.0	E	10	SW	NW	NW	EXEMPT	WP	D,S	1/1/1968	105	18	6	12	12	0		INDIAN CREEK RANCH LLC	
	593624	15.0	N	4.0	E	10	SW	NW	NW	EXEMPT	WP	D									LOOPER	Y
	546260	15.0	N	4.0	E	10	SW	NW	SW	EXEMPT	WP	D	12/4/1994	150	55	6				X	KOVACOVICH	
	593715	15.0	N	4.0	E	10	SW	NW	SE	EXEMPT	WP	D		180	25	8				X	DIEHL	
	649192	15.0	N	4.0	E	10	SW	SW		EXEMPT	WP	D									CHANDA,V V	
	902970	15.0	N	4.0	E	10	SW	SW	NE	EXEMPT		D									BACHLER	
	202828	15.0	N	4.0	E	10	SW	SW	NE	EXEMPT	WP	D	5/25/2004	193	125	6	10	6		X	KELLER	
	541285	15.0	N	4.0	E	10	SW	SW	NW	EXEMPT	WP	D	11/25/1993	100	50	6	10	17		X	MURRAY	
	802485	15.0	N	4.0	E	10	SW	SW	NW	EXEMPT	WP	D	11/15/1968	250	300	6	15	15	0		TOMERLIN,M P	
	568974	15.0	N	4.0	E	10	SW	SW	NW	EXEMPT	WP	D									MORGAN	Y
	578052	15.0	N	4.0	E	10	SW	SW	NW	EXEMPT	WP	D	12/30/1999	170	38	6	15	15	0	X	ELMER	
	808689	15.0	N	4.0	E	10	SW	SW	SW	EXEMPT	WP	D	4/3/1962								SUMMER FAMILY TRUST 5-21-	
	808690	15.0	N	4.0	E	10	SW	SW	SW	EXEMPT	WP	D	4/1/1962								SUMMER FAMILY TRUST 5-21-	
	644441	15.0	N	4.0	E	10	SW	SW	SW	EXEMPT	WP	D,IRR	8/1/1979	99	40	6	15	15	0		DERRICK,D J	
	644442	15.0	N	4.0	E	10	SW	SW	SW	EXEMPT	WP	D,IRR	1/1/1965	100	45	6	15	15	0		DERRICK,D J	
	586988	15.0	N	4.0	E	10	SW	SW	SW	EXEMPT	WP	D	8/24/2001	260	185	5	12	15	0	X	CHRISTOPHERSON	
	630506	15.0	N	4.0	E	10	SW	SE		EXEMPT	WP	D,S									BERRY,B	
	632045	15.0	N	4.0	E	10	SW	SE		EXEMPT	WP	IRR,D	1/1/1948	360	46	8	20	20	0		PALOWSKI,A P	
	649588	15.0	N	4.0	E	10	SW	SE		EXEMPT	WP	D,S		220	30	6	25	25	0		ZENDA & BELANUS,	
	802768	15.0	N	4.0	E	10	SW	SE		EXEMPT	WP	D				6					WALDON,L F	
	644230	15.0	N	4.0	E	10	SW	SE	NE	EXEMPT	WP	D	8/1/1977	175	55	6	30	30	0		ROGAN, ELIZABETH,	
	649640	15.0	N	4.0	E	10	SW	SE	NE	EXEMPT	WP	IRR,S	1/1/1962	200	33	8	30	30	0		ZUM MALLEN, DONALD,	
	649641	15.0	N	4.0	E	10	SW	SE	NE	EXEMPT	WP	D,S,IRR	1/1/1962	90		6	20	20	0		ZUM MALLEN, DONALD,	
	530978	15.0	N	4.0	E	10	SW	SE	NE	EXEMPT	WP	D	8/2/1991	190	70	6	20	20		X	RABY, DANIEL,	
	637242	15.0	N	4.0	E	10	SW	SE	NE	EXEMPT	WP	D	5/20/1980	200	40	6	20	20	0		COBLE, BARTON,M	
	547980	15.0	N	4.0	E	10	SW	SE	NE	EXEMPT	WP	D	3/2/1995	180	55	6	16	16	0	X	BRUNI	
	646673	15.0	N	4.0	E	10	SW	SE	NW	EXEMPT	WP	D,IRR	1/1/1962	65	14	6	15	15	0		JUSTUS, ROBERT,C	
	523012	15.0	N	4.0	E	10	SW	SE	SE	EXEMPT	WP	D	12/14/1988	202	47	6	20	20		X	JARRARD	
	805157	15.0	N	4.0	E	10	SE			EXEMPT	WP	D				6					HILL, ARVEL & ANN,	
76	529591	15.0	N	4.0	E	10	SE	NE	NE	NON-EXEMPT	WP	D	2/6/1991	307	30	6	80	80		X	CARSTENS	
	597622	15.0	N	4.0	E	10	SE	NE	NE	EXEMPT	WP	D	6/2/2003	250	119	6	26	16		X	BEHOWSKI	
	649333	15.0	N	4.0	E	10	SE	NE	NE	EXEMPT	WP	D									CARSTENS	
	529653	15.0	N	4.0	E	10	SE	NE	NE	EXEMPT	WP	D	11/7/1991	270		6	34	34		X	CARSTENS	
	533220	15.0	N	4.0	E	10	SE	NE	NE	EXEMPT	WP	D	8/15/1992	270		6	34	35		X	CARSTENS	
77	542263	15.0	N	4.0	E	10	SE	NE	NE	NON-EXEMPT	WP	D,IRR	4/16/1994	218		10				X	CARSTENS	
	599045	15.0	N	4.0	E	10	SE	NE	NE	EXEMPT	WP	D	10/30/2003	180	120	6				X	METCALF	
	201179	15.0	N	4.0	E	10	SE	NE	NE	EXEMPT	WP	D		250		6				X	LEE	
78	610272	15.0	N	4.0	E	10	SE	NE	NW	NON-EXEMPT	WP	D,IRR,S	1/1/1942	50	20	6	10	10	0		BROWN,H J	

Source: ADWR 55- Well Registry, 2005

APPENDIX A
ADWR WELL INVENTORY

Map ID	ADWR Reg.	T		R		Sect	Acre160	Acre 40	Acre 10	Well Type	Well Use	Water Use	Date	Depth	WL	Width	Pump Rate	Test Rate	DD	Drill Log	Owner	Cancel
	596542	15.0	N	4.0	E	10	SE	NE	NW	EXEMPT	WP	D	3/5/2003	150	120	6				X	BULMER	
	504555	15.0	N	4.0	E	10	SE	NE	SE	EXEMPT	WP	IRR	12/29/1982	160	60	6	20	20		X	VOSS,B	
	537937	15.0	N	4.0	E	10	SE	NE	SE	EXEMPT	WP	D	1/7/1994	122	34	6	30	25		X	GRINSFELDER, DORIS,	
	801972	15.0	N	4.0	E	10	SE	NW		EXEMPT	WP	D	7/1/1971	173	60	6					DILLON,I	
	518814	15.0	N	4.0	E	10	SE	NW	NE	EXEMPT	WP	D	9/26/1987	200	160	6	15	15		X	ISLAS, JESUS,	
	518946	15.0	N	4.0	E	10	SE	NW	NE	EXEMPT	WP	D									PAGE, STEVEN,	Y
	622994	15.0	N	4.0	E	10	SE	NW	NE	EXEMPT	WP	D,S,IRR	1/1/1978	478	60	6	35	35	0		ZALE,A	
	622995	15.0	N	4.0	E	10	SE	NW	NE	EXEMPT	WP	D,S,IRR	1/1/1969	185	60	6	30	30	0		ZALE,A	
	526832	15.0	N	4.0	E	10	SE	NW	NE	EXEMPT	WP	D	5/17/1990	195	135	6	23			X	PAGE, STEVE,	
	571022	15.0	N	4.0	E	10	SE	NW	NE	EXEMPT	WP	D	12/2/1998	188	100	6	10	10		X	GRANDERSON	
	511581	15.0	N	4.0	E	10	SE	NW	NW	EXEMPT	WP	D									MURPHY,L	Y
	511694	15.0	N	4.0	E	10	SE	NW	NW	EXEMPT	WP	D	7/25/1985	210	80	6	20	20		X	PATTERSON, RICHARD,C	
	601321	15.0	N	4.0	E	10	SE	NW	NW	EXEMPT	CAP	D	11/26/1976	200		6					NICCUM,J R	
	200612	15.0	N	4.0	E	10	SE	NW	NW	EXEMPT	WP	D		180	104	7				X	BROMLEY	
	527062	15.0	N	4.0	E	10	SE	NW	SW	EXEMPT	WP	D	11/16/1990	190	70	6	13	12		X	HOFFMAN	
	802715	15.0	N	4.0	E	10	SE	SW		EXEMPT	WP	D,S,IRR	7/25/1947	160	28	6	25	25	0		ROBERTS,S G	
	513120	15.0	N	4.0	E	10	SE	SW	NE	NON-EXEMPT	WP	D									JOHNSON, BRAD,	Y
	201062	15.0	N	4.0	E	10	SE	SW	NE	EXEMPT	WP	D		197	109	6				X	MATTEO	
	585935	15.0	N	4.0	E	10	SE	SW	NW	EXEMPT	WP	D		165	50	6				X	ZALE	
	503086	15.0	N	4.0	E	10	SE	SW	SE	EXEMPT	WP	D	12/6/1982	355	65	6				X	CHAN & LAWRIE	
	643665	15.0	N	4.0	E	10	SE	SW	SE	EXEMPT	WP	D	1/1/1960	150	50	6					ANDERSON,F A	
	646703	15.0	N	4.0	E	10	SE	SW	SE	EXEMPT	WP	D									NORRIS,F O	
	643666	15.0	N	4.0	E	10	SE	SW	SE	EXEMPT	WP	D	8/12/1976	187	54	6					ANDERSON,F A	
	573035	15.0	N	4.0	E	10	SE	SW	SE	EXEMPT	WP	D	3/30/1999	173	70	6				X	PYE	
	586106	15.0	N	4.0	E	10	SE	SE	NE	EXEMPT	WP	D	5/16/2001	162	32	6	18	18		X	SIMPSON FAMILY TRUST	
	586629	15.0	N	4.0	E	10	SE	SE	NE	EXEMPT	WP	D	9/1/2001	170	42	6	16	16	0	X	THE OLSON FAMILY REVOCABL	
	086713	15.0	N	4.0	E	10	SE	SE	NW	EXEMPT	WP	D	9/1/1981	441		6					DRUEN,J L	Y
79	086930	15.0	N	4.0	E	10	SE	SE	SW	NON-EXEMPT	WP	IRR	1/12/1981	415		5	35	35			LINDSAY	
	522051	15.0	N	4.0	E	10	SE	SE	SW	EXEMPT	WP	D	8/20/1988	135	96	7				X	EDWARDS, VIRGINIA,D	
	537493	15.0	N	4.0	E	10	SE	SE	SW	EXEMPT	WP	D	1/8/1993	125	34	6				X	RADOSEVIC	
	902285	15.0	N	4.0	E	10	SE	SE	SW	EXEMPT		D		260	48	6				X	PHILLABAUM TRUST	
	558180	15.0	N	4.0	E	10	SE	SE	SW	EXEMPT	WP	D	10/31/1996	160	40	6				X	FRADENBURG	
	587571	15.0	N	4.0	E	10	SE	SE	SW	EXEMPT	WP	D	7/19/2001	230	54	6				X	SCHIMER	
	509835	15.0	N	4.0	E	10	SE	SE	SE	EXEMPT	WP	D	12/21/1983	178	61	5	15	15		X	SITTERLEY	
	651197	15.0	N	4.0	E	10	SE	SE	SE	EXEMPT	WP	D	6/8/1978	204	50	8	30	30	0		LAWRENCE	
	528465	15.0	N	4.0	E	10	SE	SE	SE	EXEMPT	WP	D	7/17/1990	102	7	6	15	15		X	TOMLINSON, ROGER,	
	547983	15.0	N	4.0	E	10	SE	SE	SE	EXEMPT	WP	D	3/9/1995	150	35	6	16	16		X	DAVIS, HELEN,K	
	624527	15.0	N	4.0	E	11				EXEMPT	WP	D	4/22/1979	210		6	7	7	0		MOREHEAD, WILLIAM,	
	802560	15.0	N	4.0	E	11				EXEMPT	WP	D	2/1/1978	230	60	6	20	20	0		SMITH,R J	
	570074	15.0	N	4.0	E	11				EXEMPT											SCOTT	
	505383	15.0	N	4.0	E	11	NE	NE	NE	EXEMPT	CAP	D	5/14/1983	300	201	5				X	FEDERAL HOME MORT CO,	
	507802	15.0	N	4.0	E	11	NE	NE	NE	EXEMPT	WP	D	4/23/1984	315	180	8	10	10		X	LOMBARDI,A J	
	511341	15.0	N	4.0	E	11	NE	NE	NE	EXEMPT	WP	D	6/12/1985	290	41	6	15	15		X	CARTER, DAVID,J	
	512631	15.0	N	4.0	E	11	NE	NE	NE	EXEMPT	WP	D	11/5/1985	309	234	5	8	20		X	BRUBAKER, ROBERT,	
	513755	15.0	N	4.0	E	11	NE	NE	NE	NON-EXEMPT	WP	D									NYLANDER, EVELYN,	Y
	547406	15.0	N	4.0	E	11	NE	NE	NE	EXEMPT	WP	D									OVERHOLTZER	Y
	500891	15.0	N	4.0	E	11	NE	NE	NE	EXEMPT	WP	D	4/21/1982	300	271	6				X	LEE	
	501136	15.0	N	4.0	E	11	NE	NE	NE	EXEMPT	WP	D	10/2/1981	300	245	6	8	8	0	X	HAGGERTY,W	
	502491	15.0	N	4.0	E	11	NE	NE	NE	EXEMPT	WP	D	4/23/1982	310	268	6	10	10		X	WALTER	
	512993	15.0	N	4.0	E	11	NE	NE	NW	EXEMPT	WP	D									IHRMAN, TED,	Y
	514024	15.0	N	4.0	E	11	NE	NE	NW	EXEMPT	WP	D	5/20/1986	251	196	6	10	9		X	HARRIS, JOHN ERIC,	
	529853	15.0	N	4.0	E	11	NE	NE	NW	EXEMPT	WP	D	12/4/1991	175	127	6	85			X	ZNETKO	
	519870	15.0	N	4.0	E	11	NE	NE	NW	EXEMPT	WP	D	3/8/1988	260	213	6	12	12		X	IHRMAN, TED & KATHY,	
	529595	15.0	N	4.0	E	11	NE	NE	NW	EXEMPT	WP	D	10/18/1990	255	203	6	12	12		X	FEDERAL HOME LOAN,	
80	538760	15.0	N	4.0	E	11	NE	NE	NW	NON-EXEMPT	WP	D	10/7/1993	290	235	6				X	HAMERSMA, RICHARD,	

Source: ADWR 55- Well Registry, 2005

APPENDIX A
ADWR WELL INVENTORY

Map ID	ADWR Reg.	T		R		Sect	Acre160	Acre 40	Acre 10	Well Type	Well Use	Water Use	Date	Depth	WL	Width	Pump Rate	Test Rate	DD	Drill Log	Owner	Cancel
	516702	15.0	N	4.0	E	11	NE	NE	SW	EXEMPT	WP	D	2/20/1987	320	235	8	10	10	0	X	MCKINNEY, ROBERT,C	
	518140	15.0	N	4.0	E	11	NE	NE	SW	EXEMPT	WP	D	6/24/1987	305	180	6	15	14		X	HOY	
	552616	15.0	N	4.0	E	11	NE	NE	SW	EXEMPT	WP	D	10/3/1996	270	260	6				X	FERRO	
	202019	15.0	N	4.0	E	11	NE	NE	SW	EXEMPT	WP	D		300	235	6				X	MITCHELL	
81	511606	15.0	N	4.0	E	11	NE	NE	SE	NON-EXEMPT	WP	D		320		6				X	HILL,R	
	522091	15.0	N	4.0	E	11	NE	NE	SE	EXEMPT	WP	D	9/2/1988	30	226	6	10	6	0	X	NYLANDER, EVELYN,	
	201154	15.0	N	4.0	E	11	NE	NE	SE	EXEMPT	WP	D		320	236	5				X	PRINGLE	
	510774	15.0	N	4.0	E	11	NE	NW	NE	EXEMPT	WP	D	5/10/1985	300	230	6	15	15	0	X	VICKERS,C	
	522647	15.0	N	4.0	E	11	NE	NW	NE	EXEMPT	WP	D	10/22/1988	320	185	6	15			X	DICKISON, C.V.,	
	526833	15.0	N	4.0	E	11	NE	NW	NE	EXEMPT	WP	D	1/22/1990	285	225	6	10	10		X	LIVINGSTON, JOHN,	
	589387	15.0	N	4.0	E	11	NE	NW	NE	EXEMPT	WP	D									VERDE TRUST	Y
	599907	15.0	N	4.0	E	11	NE	NW	NE	EXEMPT	WP	D		300	190	6				X	NELSON	
	202020	15.0	N	4.0	E	11	NE	NW	NE	EXEMPT	WP	D		295	223	6				X	WOOD	
	202056	15.0	N	4.0	E	11	NE	NW	NE	EXEMPT	WP	D	2/18/2004	335		6				X	PARSONS	
	560988	15.0	N	4.0	E	11	NE	NW	NW	EXEMPT	WP	D	3/12/1997	320	203	6				X	JOHNSON III	
	595804	15.0	N	4.0	E	11	NE	NW	NW	EXEMPT	WP	D		300	197	6				X	PORTER	
	505029	15.0	N	4.0	E	11	NE	NW	SW	EXEMPT	WP	S									SEC INC,	Y
	085567	15.0	N	4.0	E	11	NE	SW	NE	EXEMPT	WP	D									SANDS,E L	Y
	086825	15.0	N	4.0	E	11	NE	SW	NE	EXEMPT	WP	D	2/10/1981	330	250	6	12	12	0		SETZLER, FRANK,P	
	633006	15.0	N	4.0	E	11	NE	SW	NE	EXEMPT	WP	D	1/20/1981	330	230	6	122	122	0		SANDS,E L	
	513655	15.0	N	4.0	E	11	NE	SW	NE	EXEMPT	WP	D	4/12/1986	354	228	6	15	15		X	SCOGGIN, WELDON,J	
82	511866	15.0	N	4.0	E	11	NE	SE	NE	NON-EXEMPT	WP	D	12/17/1985	335	200	6	15	10		X	DANA	
	544320	15.0	N	4.0	E	11	NE	SE	NE	EXEMPT	WP	D	8/30/1994	300	245	6	12	12		X	FREE	
	548653	15.0	N	4.0	E	11	NE	SE	NE	EXEMPT	WP	D	5/12/1995	358	240	6	10	10		X	IRVIN	
83	538616	15.0	N	4.0	E	11	NE	SE	NE	NON-EXEMPT	WP	D,IRR	9/17/1993	300	247	6	12	12		X	DIANA L ORDEAN REVOCABLE	
	557738	15.0	N	4.0	E	11	NE	SE	NE	EXEMPT	WP	D	7/2/1996	300	245	6	10	10		X	U REN	
	503624	15.0	N	4.0	E	11	NE	SE	NW	EXEMPT	WP	D			225		10	10	0	X	LA RUE,C	
	511119	15.0	N	4.0	E	11	NE	SE	NW	EXEMPT	WP	D	5/30/1985	291	230	6	12	12		X	0	
	901935	15.0	N	4.0	E	11	NE	SE	NW	EXEMPT		D									PARKEL	
	808646	15.0	N	4.0	E	11	NE	SE	SE	EXEMPT	WP	D	1/1/1978		300						BALDWIN ORDEAN FAMILY REV	
	650639	15.0	N	4.0	E	11	NW			EXEMPT	WP	D	4/24/1978	260	160	6	15	15	0		DES ROSIERS, ANNE,E	
	577902	15.0	N	4.0	E	11	NW	NE	NE	EXEMPT	WP	D	11/20/1999	300	200	6				X	PAUL JR	
	200092	15.0	N	4.0	E	11	NW	NE	NE	EXEMPT	WP	D	10/27/2003	315	170	6				X	MARQUIS/BORCHERT	
	568661	15.0	N	4.0	E	11	NW	NE	NW	EXEMPT	WP	D	6/19/1998	300	210	6				X	SCHULTZ	
	568262	15.0	N	4.0	E	11	NW	NE	NW	EXEMPT	WP	D	6/12/1998	320	190	6				X	PAGE	
	510467	15.0	N	4.0	E	11	NW	NE	SW	EXEMPT	WP	D	4/23/1985	354	220	8	15	15		X	BROWNSCOMBE,P	
	507119	15.0	N	4.0	E	11	NW	NE	SW	EXEMPT	WP	D	2/24/1984	226	150	5	9	9		X	NEAL, LINDA LEE,	
	520054	15.0	N	4.0	E	11	NW	NE	SW	EXEMPT	WP	D	4/20/1988	300	168	6	15	15		X	FARNSWORTH, JAMES,R	
	520618	15.0	N	4.0	E	11	NW	NE	SW	EXEMPT	WP	D	5/20/1988	315	216	6	10	10		X	BROWN	
	558169	15.0	N	4.0	E	11	NW	NE	SW	EXEMPT	WP	D	8/21/1996	220	170	6	10	10		X	CLIFFORD	
	584880	15.0	N	4.0	E	11	NW	NE	SW	EXEMPT	WP	D	6/30/2001	402	186	6				X	PAGE	
	504920	15.0	N	4.0	E	11	NW	NE	SE	EXEMPT	CAP	D,S	7/17/1983	300	210	5				X	BJORNRUD	
	538639	15.0	N	4.0	E	11	NW	NE	SE	EXEMPT	WP	D	7/29/1993	340	210	6	20	20		X	GRONDIN, DAVID,	
	516289	15.0	N	4.0	E	11	NW	NW	NE	EXEMPT	WP	D	1/14/1987	200	125	6				X	BLISS, FRANK W II,	
	539766	15.0	N	4.0	E	11	NW	NW	NE	EXEMPT	WP	D	7/9/1993	180	135	6				X	ZNETKO	
	086686	15.0	N	4.0	E	11	NW	NW	NW	EXEMPT	WP	D	1/1/1981	165		6					WEST HAY INC	
	519097	15.0	N	4.0	E	11	NW	NW	NW	EXEMPT	WP	D	11/7/1987	218	186	6	10	6		X	TAYLOR	
	529034	15.0	N	4.0	E	11	NW	NW	NW	EXEMPT	WP	D									WORKMAN, CARL,G	Y
	532022	15.0	N	4.0	E	11	NW	NW	NW	EXEMPT	WP	D	6/28/1991	185	100	6				X	DORSCHT, BERYEL,D	
	643131	15.0	N	4.0	E	11	NW	NW	NW	EXEMPT	WP	D	9/20/1965	165		6	20	20	0		VALENCIA,P C	
84	803105	15.0	N	4.0	E	11	NW	NW	NW	NON-EXEMPT	WP	D	9/1/1972	120			30				DORSCHT, BERYEL,D	
	500436	15.0	N	4.0	E	11	NW	NW	NW	EXEMPT	WP	D	1/1/1981	373	95	6		20	0	X	UNTIEDT, HARRY,	
	519098	15.0	N	4.0	E	11	NW	NW	NW	EXEMPT	WP	D	1/15/1988	222	186	6	12	4		X	PENDLETON, ARTHUR,F	
	803313	15.0	N	4.0	E	11	NW	NW	NW	EXEMPT	WP	D	1/1/1980	180		6	15				LUDWIG	
	539775	15.0	N	4.0	E	11	NW	NW	NW	EXEMPT	WP	D	10/21/1993	250	150	6	45	16		X	RIPPLINGER, CAROLE,	

Source: ADWR 55- Well Registry, 2005

APPENDIX A
ADWR WELL INVENTORY

Map ID	ADWR Reg.	T		R		Sect	Acre160	Acre 40	Acre 10	Well Type	Well Use	Water Use	Date	Depth	WL	Width	Pump Rate	Test Rate	DD	Drill Log	Owner	Cancel
	551550	15.0	N	4.0	E	11	NW	NW	NW	EXEMPT	WP	D	9/18/1995	315	190	6	12	25		X	MOSS, ALBERT,	
	808349	15.0	N	4.0	E	11	NW	NW	NW	EXEMPT	WP	D	1/1/1962	154		7					NORTON	
	643133	15.0	N	4.0	E	11	NW	NW	SW	EXEMPT	WP	D	9/10/1966	162		6	20	20	0		VALENCIA,D A	
	644210	15.0	N	4.0	E	11	NW	NW	SW	EXEMPT	WP	D	6/1/1972	200	150	6	4	4	0		ZALE,M M	
	645634	15.0	N	4.0	E	11	NW	NW	SW	EXEMPT	WP	D	1/1/1962	178	20	6					FOSTER,T L	
	647381	15.0	N	4.0	E	11	NW	NW	SW	EXEMPT	WP	D		160		6	14	14	0		WARINER,C	
	643132	15.0	N	4.0	E	11	NW	NW	SW	EXEMPT	WP	D	8/15/1974	170		6	20	20	0		VALENCIA,D A	
	574746	15.0	N	4.0	E	11	NW	NW	SW	EXEMPT	WP	D		165	120	6				X	SANCHEZ	
	611475	15.0	N	4.0	E	11	NW	NW	SE	EXEMPT	WP	D	2/25/1975	200		6					MCDONALD,M C	
	647347	15.0	N	4.0	E	11	NW	NW	SE	EXEMPT	WP	IRR,D,S									WHALEN,E J	
	803068	15.0	N	4.0	E	11	NW	NW	SE	EXEMPT	WP	D									SKYLES, DONALD,	
	805312	15.0	N	4.0	E	11	NW	NW	SE	EXEMPT	WP	D					35				MAUK, JERRIE,L	
	551407	15.0	N	4.0	E	11	NW	NW	SE	EXEMPT	WP	D	1/30/1996	225	130	6	12	12		X	TANAKA, SEIICHI,	
	551504	15.0	N	4.0	E	11	NW	SW	NE	EXEMPT	WP	D	9/21/1995	240	215	6	15	15		X	BULLARD, LARRY,	
	524609	15.0	N	4.0	E	11	NW	SW	NE	EXEMPT	WP	D	6/25/1989	335	180	6	8	8	0	X	BRUNORI, GEORGE,	
	546868	15.0	N	4.0	E	11	NW	SW	NE	EXEMPT	WP	D	2/15/1995	250	160	6				X	MATHE, DONALD,	
	573828	15.0	N	4.0	E	11	NW	SW	NE	EXEMPT	WP	D	5/29/1999	320	210	6				X	BROWN	N
	574740	15.0	N	4.0	E	11	NW	SW	NE	EXEMPT	WP	D	6/10/1999	280	165	6				X	BURRESS	
	583753	15.0	N	4.0	E	11	NW	SW	NE	EXEMPT	WP	D	12/30/2000	270	150	6				X	COLEMAN	
	530884	15.0	N	4.0	E	11	NW	SW	NW	EXEMPT	WP	D	4/4/1991	243	185	6	10			X	TARI, ELMO,	
	560223	15.0	N	4.0	E	11	NW	SW	NW	EXEMPT	WP	D	2/12/1997	293	148	6				X	CRAWFORD, JULIE,	
	647208	15.0	N	4.0	E	11	NW	SW	NW	EXEMPT	WP	D		175		6	6	6	0		HANCOX,G E	
	647209	15.0	N	4.0	E	11	NW	SW	NW	EXEMPT	WP	D		170		6	6	6	0		HANCOX,G F	
	602314	15.0	N	4.0	E	11	NW	SW	SW	EXEMPT	WP	IRR,S	4/5/1980	190	114	6					KNADLER,A P	
	602313	15.0	N	4.0	E	11	NW	SW	SW	EXEMPT	WP	D	8/30/1974	160	121	6					KNADLER,A P	
	589989	15.0	N	4.0	E	11	NW	SW	SW	EXEMPT	WP	D	2/20/2002	302	212	6				X	MORRIS	
	200471	15.0	N	4.0	E	11	NW	SW	SW	EXEMPT	WP	D									ASHBY	Y
	522052	15.0	N	4.0	E	11	NW	SW	SE	EXEMPT	WP	D	9/15/1988	300	180	6	12	10		X	COOKE, TED,R	
	518918	15.0	N	4.0	E	11	NW	SW	SE	EXEMPT	WP	D	9/14/1987	216	180	6	10	7		X	TIDSWELL, DONALD,	
	597456	15.0	N	4.0	E	11	NW	SW	SE	EXEMPT	WP	D									SNYDER	Y
	536794	15.0	N	4.0	E	11	NW	SE	NE	EXEMPT	WP	D	4/3/1993	290	215	6				X	POTT	
	551007	15.0	N	4.0	E	11	NW	SE	NE	D, S, E	WP	D	7/18/1996	318	230	6	10	10		X	MAZAS	
	807372	15.0	N	4.0	E	11	NW	SE	NE	EXEMPT	WP	D	12/31/1979	340	210	6	10				HILTY	
	901251	15.0	N	4.0	E	11	NW	SE	NE	EXEMPT		D	1/21/2005	360	215	5	12	12		X	LAWTHERS	
	901019	15.0	N	4.0	E	11	NW	SE	NE	EXEMPT		D		410	216	5				X	RODABOUGH	
	511024	15.0	N	4.0	E	11	NW	SE	NW	EXEMPT	WP	D	5/15/1985	310	150	6				X	HART, JOHN & G.,	
	650807	15.0	N	4.0	E	11	NW	SE	NW	EXEMPT	WP	D		160		6	6	6	0		PARKER,J L	
	574754	15.0	N	4.0	E	11	NW	SE	NW	EXEMPT	WP	D	6/8/1999	300	170	6	10	10		X	BRUNO	
	592887	15.0	N	4.0	E	11	NW	SE	NW	EXEMPT	WP	D	6/13/2002	350	225	6	12	12		X	HAMMONS FAMILY TRUST	
	519218	15.0	N	4.0	E	11	NW	SE	SW	EXEMPT	WP	D	10/22/1987	350	180	6	10	10		X	JONES	
	547344	15.0	N	4.0	E	11	NW	SE	SW	EXEMPT	WP	D	2/10/1995	320	220	6	12	12		X	SHELTON, WES,	
	805252	15.0	N	4.0	E	11	SW			EXEMPT	WP	IRR					8				KOLESSAR, JAMES,J	
	588077	15.0	N	4.0	E	11	SW	NE	NE	EXEMPT	WP	D	11/2/2001	350	245	6				X	STONE	
	547831	15.0	N	4.0	E	11	SW	NE	NE	EXEMPT	WP	D	2/25/1995	298	215	6	10	10		X	GUNTHER, ART,	
	902386	15.0	N	4.0	E	11	SW	NE	NW	EXEMPT		D									PREDNEAU	
85	511764	15.0	N	4.0	E	11	SW	NE	SW	NON-EXEMPT	WP	D	6/22/1985	280		6	20	12		X	ROZELL,L	
	510745	15.0	N	4.0	E	11	SW	NE	SW	EXEMPT	WP	D	5/8/1985	425	325	6				X	BUTTON	
	646079	15.0	N	4.0	E	11	SW	NE	SE	EXEMPT	WP	D,S,IRR		295	155	8	35	35	0		IREYS,C G	
	202621	15.0	N	4.0	E	11	SW	NE	SE	EXEMPT	WP	D		300	175	6				X	GRAVES	
	576439	15.0	N	4.0	E	11	SW	NW	SW	EXEMPT	WP	D	10/22/1999	260	150	6	10	10		X	HANEY	
	571937	15.0	N	4.0	E	11	SW	NW	SE	EXEMPT	WP	D	3/2/1999	200	130	6				X	BONDS	
	546101	15.0	N	4.0	E	11	SW	SW	NE	EXEMPT	WP	D									DEARTH, EDWIN,	Y
	549213	15.0	N	4.0	E	11	SW	SW	NE	EXEMPT	WP	D	5/2/1995	275	215	6	10	10		X	NIGRO	
	085497	15.0	N	4.0	E	11	SW	SW	SW	EXEMPT	WP	D	11/26/1980	238	113	6	15	15	0		SCOTT,D	
	085498	15.0	N	4.0	E	11	SW	SW	SW	EXEMPT	WP	D	10/22/1980	200	110	6					MORRIS	

Source: ADWR 55- Well Registry, 2005

APPENDIX A
ADWR WELL INVENTORY

Map ID	ADWR Reg.	T		R		Sect	Acre160	Acre 40	Acre 10	Well Type	Well Use	Water Use	Date	Depth	WL	Width	Pump Rate	Test Rate	DD	Drill Log	Owner	Cancel
	801061	15.0	N	4.0	E	11	SW	SW	SW	EXEMPT	WP	D	1/26/1970	175		6					DAY, DOUGLAS,D	
	540835	15.0	N	4.0	E	11	SW	SW	SW	EXEMPT	WP	D	11/18/1993	250	205	6	1	10		X	BAKER	
	534749	15.0	N	4.0	E	11	SW	SW	SE	EXEMPT	WP	D	4/30/1992	177	105	6				X	BARRETT, JOE,	
	806291	15.0	N	4.0	E	11	SW	SW	SE	EXEMPT	WP	D	12/31/1979	350	300	8	12				POTT	
	536327	15.0	N	4.0	E	11	SW	SW	SE	EXEMPT	WP	D	9/10/1992	175	110	6	15	15		X	BAUER, MANFRED,	
86	901821	15.0	N	4.0	E	11	SW	SE	NW	NON-EXEMPT		D									ADAM	
	594967	15.0	N	4.0	E	11	SW	SE	SW	EXEMPT	WP	D									NEWBY	Y
	503971	15.0	N	4.0	E	11	SW	SE	SE	EXEMPT	WP	D	10/7/1982	240	118	8				X	HAVENS	
	557673	15.0	N	4.0	E	11	SW	SE	SE	EXEMPT	WP	D					5	5			HILES, HAROLD,	
	603021	15.0	N	4.0	E	11	SE			EXEMPT	WP	D	2/25/1975	200	135	6					MC DONALD,W E	
	544118	15.0	N	4.0	E	11	SE	NE	NE	EXEMPT	WP	D	6/28/1994	330	260	6	11	10		X	IRBY, MARY,L	
	551661	15.0	N	4.0	E	11	SE	NE	NE	EXEMPT	WP	D	9/27/1995	300	232	6	1	1		X	BOURQUE, LOUIS,	
	571939	15.0	N	4.0	E	11	SE	NE	NE	EXEMPT	WP	D									BOURQUE	Y
	575475	15.0	N	4.0	E	11	SE	NE	NE	EXEMPT	WP	D	8/21/1999	300	225	6	20	15		X	LEDBETTER	
	597769	15.0	N	4.0	E	11	SE	NE	NE	EXEMPT	WP	D,S		320	222	7				X	CHRISTENSON	
	549922	15.0	N	4.0	E	11	SE	NE	NW	EXEMPT	WP	D	6/20/1995	298	220	6				X	RUDD	
	573703	15.0	N	4.0	E	11	SE	NE	NW	EXEMPT	WP	D	5/21/1999	299	240	6	15	15		X	BILLINGS	
	591222	15.0	N	4.0	E	11	SE	NE	NW	EXEMPT	WP	D	3/15/2002	345	250	6				X	PIRTLE	
	578641	15.0	N	4.0	E	11	SE	NE	SW	EXEMPT	WP	D	3/23/2000	270	160	5	10	10		X	JOHNSON	
	900991	15.0	N	4.0	E	11	SE	NW	NE	EXEMPT		D									ART	
	592023	15.0	N	4.0	E	11	SE	NW	NE	EXEMPT	WP	D									GUENTHER	Y
	512781	15.0	N	4.0	E	11	SE	NW	NW	EXEMPT	WP	D	12/12/1985	175	125	6	10	12		X	HAUG,AL,	
	557769	15.0	N	4.0	E	11	SE	NW	NW	EXEMPT	WP	D	7/3/1996	242	170	6	10	10		X	LAYFIELD, JANET,	
	578642	15.0	N	4.0	E	11	SE	NW	NW	EXEMPT	WP	D	4/6/2000	450	220	5				X	GRANT	
	568961	15.0	N	4.0	E	11	SE	SW	NE	EXEMPT	WP	D	11/1/1998	200	145	6				X	BOELTS	
	585392	15.0	N	4.0	E	11	SE	SW	NW	EXEMPT	WP	D	2/9/2001	265	150	6				X	JOCHUM	
	500804	15.0	N	4.0	E	11	SE	SW	SW	EXEMPT	WP	D	10/19/1981	243		8				X	GIZA	
	512782	15.0	N	4.0	E	11	SE	SW	SW	EXEMPT	WP	D									VANDERHORST, THOMAS,	Y
	500805	15.0	N	4.0	E	11	SE	SW	SW	EXEMPT	WP	D	10/9/1981	243	116	8	20	20	0	X	WESTOVER, BRUCE,E	
	523006	15.0	N	4.0	E	11	SE	SW	SW	EXEMPT	WP	D	1/24/1989	180	60	6	11	11	0	X	GRIBAUSKAS, YVONNE,	
	529942	15.0	N	4.0	E	11	SE	SW	SW	EXEMPT	WP	D	4/17/1991	230	134	6	20	18		X	PERRY	
	565558	15.0	N	4.0	E	11	SE	SW	SE	EXEMPT	WP	D		290	172	7				X	AHERN	
	594215	15.0	N	4.0	E	11	SE	SW	SE	EXEMPT	WP	D		300		5				X	MANZENBURGER	
	585184	15.0	N	4.0	E	11	SE	SW	SE	EXEMPT	WP	D	2/22/2001	250	155	6				X	SANDALL	
	585601	15.0	N	4.0	E	11	SE	SW	SE	EXEMPT	WP	D	3/7/2001	250	165	6				X	HERTZFELD	
	594953	15.0	N	4.0	E	11	SE	SW	SE	EXEMPT	WP	D									DJ & BE GEYMAN FAMILY LIV	
	201988	15.0	N	4.0	E	11	SE	SW	SE	EXEMPT	WP	D		300	173	6				X	DJ & BE GEYMAN FAMILY LIV	
	501907	15.0	N	4.0	E	11	SE	SE		EXEMPT	WP	D	2/12/1982	252	126	8				X	MACKLIN	
	900296	15.0	N	4.0	E	11	SE	SE	NE	EXEMPT		D									KEELING	
	504168	15.0	N	4.0	E	11	SE	SE	NW	EXEMPT	WP	D	11/13/1982	240	124	8				X	PENNINGTON	
	584867	15.0	N	4.0	E	11	SE	SE	NW	EXEMPT	WP	D	2/2/2001	300	180	5				X	BOURNE	
	567957	15.0	N	4.0	E	11	SE	SE	SW	EXEMPT	WP	D	5/6/1998	315	235	6				X	HAYMAN	
	594965	15.0	N	4.0	E	11	SE	SE	SW	EXEMPT	WP	D		260	120	7				X	FELDMAN	N
	900924	15.0	N	4.0	E	11	SE	SE	SW	EXEMPT		D		400	231	6				X	KEELING	
	557743	15.0	N	4.0	E	11	SE	SE	SE	EXEMPT	WP	D	7/5/1996	443	340	6				X	GROAT, ROBERT,	
	526041	15.0	N	4.0	E	12	NE	SW	NE	EXEMPT	WP	D,S									LIVINGSTON, JOHN,	Y
	802759	15.0	N	4.0	E	12	NE	SE	NW	EXEMPT	WP	D,IRR									BIGSBY, MARY A.,	
	558126	15.0	N	4.0	E	12	NE	SE	SE	EXEMPT	WP	D	7/22/1996	152	32		15	15		X	PORTER	
	544356	15.0	N	4.0	E	12	NW	NW	SW	EXEMPT	WP	D									MEYER, BONNIE,J	Y
	512328	15.0	N	4.0	E	12	NW	SW	SW	EXEMPT	WP	D	9/20/1985	125	40	6	12	12		X	LEUNO ETHEL,	
	616773	15.0	N	4.0	E	12	SW	NE	NE	EXEMPT	WP	D	4/19/1947	100	50	6	1	1	0		DUSTMAN,H U	
	505873	15.0	N	4.0	E	12	SE	SE	SE	EXEMPT	WP	D	7/9/1983	314	200	6	15	15		X	MICHAEL,W C	
	536919	15.0	N	4.0	E	13	NE	NW	NW	EXEMPT	WP	D	11/14/1992	185	60	6	6	10	0	X	BENICH	Y
	535320	15.0	N	4.0	E	14	NE	NW	NW	EXEMPT	WP	D									THOMPSON, JERRY,	Y
	630102	15.0	N	4.0	E	14	NE	SE	NW	EXEMPT	WP	D	1/1/1977	150		6	15	15	0		COCKRELL, CHERYL,M	

Source: ADWR 55- Well Registry, 2005

APPENDIX A
ADWR WELL INVENTORY

Map ID	ADWR Reg.	T		R		Sect	Acre160	Acre 40	Acre 10	Well Type	Well Use	Water Use	Date	Depth	WL	Width	Pump Rate	Test Rate	DD	Drill Log	Owner	Cancel
	511870	15.0	N	4.0	E	14	SW	NW	NE	EXEMPT	WP	D	8/5/1985	178	33	5	12	12		X	BARKEMEYER,L E	
	800933	15.0	N	4.0	E	14	SW	NW	NW	EXEMPT	WP	D,IRR	7/12/1968	150	40	6	35	35	0		MEREDITH	
	603313	15.0	N	4.0	E	14	SW	SW		EXEMPT	WP	D	11/8/1976	168	90	6	20	20	0		NOVAK	
	573829	15.0	N	4.0	E	14	SW	SW	NE	EXEMPT	WP	D	6/16/1999	300	115	6				X	TARABORELLI	
	514023	15.0	N	4.0	E	14	SW	SW	NW	EXEMPT	WP	D									MCLEAN,F M	Y
	508398	15.0	N	4.0	E	14	SW	SW	NW	EXEMPT	WP	D	6/22/1984	150	20	8	10	10		X	GOMEZ, EDWARD,R	
	203780	15.0	N	4.0	E	14	SW	SW	NW	EXEMPT	WP	D									MC CALLON	
	601244	15.0	N	4.0	E	14	SW	SW	SW	EXEMPT	CAP	D	8/6/1979	200	45	8					PESHEK, LYNNE,E	
	645994	15.0	N	4.0	E	14	SW	SW	SW	EXEMPT	WP	D	11/13/1979	200	52	6	26	26	0		MCKUNE,W E	
	633037	15.0	N	4.0	E	14	SW	SW	SW	EXEMPT	WP	D	5/3/1980	260		6	20	20	0		JENKINS, LEDELL & T,	
	593956	15.0	N	4.0	E	14	SW	SW	SW	EXEMPT	WP	D		180	130	6				X	FRICK	
	645489	15.0	N	4.0	E	14	SE	SW	SE	EXEMPT	WP	D	4/20/1978	175	39	6					PERES,F B	
87	802977	15.0	N	4.0	E	15	NE	NE	NE	NON-EXEMPT	WP	D,IRR	10/8/1974	200		6	20				WARD,B T	
	205572	15.0	N	4.0	E	15	NE	NE	NE	EXEMPT	WP	D		90	1	6				X	TUDOR	
	546941	15.0	N	4.0	E	15	NE	NE	NE	EXEMPT	WP	D,IRR	12/29/1994	80		6				X	0	
	534429	15.0	N	4.0	E	15	NE	NE	NW	EXEMPT	WP	D	2/28/1992	145		8				X	WARD, BURTA,T	
88	808594	15.0	N	4.0	E	15	NE	NE	NW	NON-EXEMPT	WP	D,S,IRR		200		6	75				WARD	
	644400	15.0	N	4.0	E	15	NE	NE	SW	EXEMPT	WP	D			28		35				KOHNEN INVESTMENT	
89	805431	15.0	N	4.0	E	15	NE	NW	SW	NON-EXEMPT	WP	IRR,S		295			202			X	Kohnen Investment L.P.	
	650071	15.0	N	4.0	E	15	NE	SE	SE	EXEMPT	WP	D				6					MORENO,C	
	647600	15.0	N	4.0	E	15	NW			EXEMPT	WP	D		100	24	6	20	20	0		LOOMIS	
	527536	15.0	N	4.0	E	15	NW	NE	NE	EXEMPT	WP	D	5/31/1990	180	12	6	20	20		X	MOEHRING, KRISTINE,	
	548474	15.0	N	4.0	E	15	NW	NE	NW	EXEMPT	WP	D,IRR	4/5/1995	200	25	6				X	KNOX, BARBARA,	
	548269	15.0	N	4.0	E	15	NW	NE	NW	EXEMPT	WP	D	4/19/1995	200	28	6	15	15		X	BRYAN, LARRY,	
	535565	15.0	N	4.0	E	15	NW	NE	SE	EXEMPT	WP	D	8/15/1992	197	76	6	12	12		X	RUSSELL	
	536925	15.0	N	4.0	E	15	NW	NE	SE	EXEMPT	WP	D	10/13/1992	181	60	6	12	12		X	GANONG	
	902403	15.0	N	4.0	E	15	NW	NE	SE	EXEMPT		D									MEIS	
	573853	15.0	N	4.0	E	15	NW	NE	SE	EXEMPT	WP	D	5/27/1999	200	60	6				X	RUNKE MD	
	645879	15.0	N	4.0	E	15	NW	NW		EXEMPT	WP	D	1/1/1939	30							FRONTIERE, GEORGIA,	
	502968	15.0	N	4.0	E	15	NW	NW		EXEMPT	WP	D,S	1/20/1983	250	67	7	25	25		X	ERWIN, KENNETH,D	
	630706	15.0	N	4.0	E	15	NW	NW	NW	EXEMPT	WP	D	3/4/1980	225	135	6	15	15	0		STEWARD,M J	
	555566	15.0	N	4.0	E	15	NW	NW	NW	EXEMPT	WP	D									DEVLIEGER	
	595814	15.0	N	4.0	E	15	NW	NW	NW	EXEMPT	WP	D	11/21/2002	200	13	6	20	20		X	HARRIS	
	537936	15.0	N	4.0	E	15	NW	SW	NE	EXEMPT	WP	D	9/20/1993	260	155	6	15	15		X	HARRINGTON, DANIEL,	
	556632	15.0	N	4.0	E	15	NW	SE	NE	EXEMPT	WP	D									TALBERT, ESTHER,	Y
	561594	15.0	N	4.0	E	15	NW	SE	SW	EXEMPT	WP	D	5/27/1997	260	142	6				X	KEVES	
	200277	15.0	N	4.0	E	15	NW	SE	SE	EXEMPT	WP	D	10/7/2003	260	124	6				X	KNAPP	
	549625	15.0	N	4.0	E	15	SW	NE	NE	EXEMPT	WP	D	5/28/1995	250	180	6	12	10	0	X	GOLDEN	
	901275	15.0	N	4.0	E	15	SW	NE	NE	EXEMPT		D		350	210	5				X	CFP DEVELPMENT, HASKELL S	
	549387	15.0	N	4.0	E	15	SW	NE	NW	EXEMPT	WP	D	6/3/1995	250	130	6	1	10		X	VANDERHOEVEN	
	585536	15.0	N	4.0	E	15	SW	NW	SW	EXEMPT	WP	D	3/1/2001	520	270	6				X	RABY	
	803347	15.0	N	4.0	E	15	SW	SW	NE	EXEMPT	WP	D									SCOTT, DALLAS,	
90	603523	15.0	N	4.0	E	15	SE	NE		NON-EXEMPT	WP	D,IRR	6/1/1977	250		12	185	185	0		BARNEY, ROY ETAL,D	
	535839	15.0	N	4.0	E	15	SE	NE	NE	EXEMPT	WP	D									BARNEY, ROY,	Y
	541677	15.0	N	4.0	E	15	SE	NE	NE	EXEMPT	WP	D	12/15/1993	221		10		15	0	X	BARNEY, ROY,	
91	629055	15.0	N	4.0	E	15	SE	NE	SW	NON-EXEMPT	WP	IND		90	12	8	200				JACKSON WATER CO,	
92	629056	15.0	N	4.0	E	15	SE	NE	SW	NON-EXEMPT	WP	IND	1/1/1973	450	12	10	250	250	0		JACKSON WATER CO,	
	506156	15.0	N	4.0	E	15	SE	NE	SE	EXEMPT	WP	D	9/19/1983	260		6	25	25		X	LEEMAN,D	
	504670	15.0	N	4.0	E	15	SE	NW	NE	EXEMPT	WP	D	1/14/1983	95	16	6	12	12		X	SCOTT,A	
	629057	15.0	N	4.0	E	15	SE	NW	NW	EXEMPT	WP	IND		150	18	8					JACKSON WATER CO,	
	504671	15.0	N	4.0	E	15	SE	NW	NW	EXEMPT	WP	D	1/19/1983	95	16	6	15	15		X	SORRELLS AND BRANDER	
	507369	15.0	N	4.0	E	15	SE	NW	NW	EXEMPT	WP	D	4/12/1984	325	120	5	10	10		X	KERR,W	
	637618	15.0	N	4.0	E	15	SE	NW	SW	EXEMPT	WP	D	2/15/1966	260	85	6	15	15	0		LUMINOUS 1	
	800733	15.0	N	4.0	E	15	SE	SW		EXEMPT	WP	D	8/1/1970	100							SCOTT,S P	
	648806	15.0	N	4.0	E	15	SE	SW	NE	EXEMPT	WP	D				6	12	12	0		BURDICK,J C	

Source: ADWR 55- Well Registry, 2005

APPENDIX A
ADWR WELL INVENTORY

Map ID	ADWR Reg.	T		R		Sect	Acre160	Acre 40	Acre 10	Well Type	Well Use	Water Use	Date	Depth	WL	Width	Pump Rate	Test Rate	DD	Drill Log	Owner	Cancel
	504669	15.0	N	4.0	E	15	SE	SW	SW	EXEMPT	WP	D	1/15/1983	150	56	6	12	12		X	SCOTT,E	
	600633	15.0	N	4.0	E	15	SE	SW	SE	EXEMPT	WP	IRR,D	6/28/1978	220	117	6	20	20	0	N	HART	
93	624906	15.0	N	4.0	E	15	SE	SW	SE	NON-EXEMPT	WP	IRR,D,S	12/31/1976	322		8	20				CROZIER, JOAN,M	
	510255	15.0	N	4.0	E	15	SE	SE	NE	EXEMPT	WP	D	2/28/1985	142	25	4	10	10	0	X	PENDER	Y
	511916	15.0	N	4.0	E	15	SE	SE	NW	EXEMPT	WP	D	6/27/1983	105	30	6	15	15		X	CALBERT, JOHN,	
	481782	15.0	N	4.0	E	15	SE	SE	NW	EXEMPT	ABAN	D									MCHORNEY	
	506068	15.0	N	4.0	E	15	SE	SE	SW	EXEMPT	WP	D	8/15/1983	193	80	6	15	15		X	PRICE, MARK,&	
	527252	15.0	N	4.0	E	15	SE	SE	SW	EXEMPT	WP	D									MARSH, JIMMIE,	Y
	648824	15.0	N	4.0	E	15	SE	SE	SW	EXEMPT	WP	D			50	6	10	10	0		TATE,B D	
	515413	15.0	N	4.0	E	15	SE	SE	SE	EXEMPT	WP	D									GOHIER	Y
	521594	15.0	N	4.0	E	15	SE	SE	SE	EXEMPT	WP	D	7/6/1988	210	12	8	15	15	0	X	GOHIER	
	641430	15.0	N	4.0	E	15	SE	SE	SE	EXEMPT	WP	D	11/12/1978	174	100	6	18				TURNER, TROY,J	
	600734	15.0	N	4.0	E	15	SE	SE	SE	EXEMPT	WP	D	8/10/1977	390	20	8	20	20	0	N	WARDLOW,C R	
	644779	15.0	N	4.0	E	15	SE	SE	SE	EXEMPT	WP	D	6/16/1976	183	35	6	15	15	0		WHALEY,D D	
	644780	15.0	N	4.0	E	15	SE	SE	SE	EXEMPT	WP	IRR	12/23/1979	180	90	6	10	10	0		BURNS JESSIE,J	
	521593	15.0	N	4.0	E	15	SE	SE	SE	EXEMPT	WP	D	7/16/1988	212	18	8	17	15		X	WARDLOW, LEONARD,	
	602335	15.0	N	4.0	E	15	SE	SE	SE	EXEMPT	WP	D	6/22/1978	308	40	6	18	18	0		POLLARD	
	805740	15.0	N	4.0	E	17				EXEMPT	WP	D	12/31/1977	300	238	6	22				RUDY, DAY DEROSSETT,	
	570869	15.0	N	4.0	E	17	NE	NE	NW	EXEMPT	WP	D									BRYSON	Y
	205132	15.0	N	4.0	E	17	NE	NE	SE	EXEMPT	WP	D		335	250	5				X	RADD	
	584797	15.0	N	4.0	E	17	NE	NW	NE	EXEMPT	WP	D	2/7/2001	500	170	8	50	50		X	TUTTLE	N
	589467	15.0	N	4.0	E	17	NE	NW	NW	EXEMPT	WP	D	12/12/2001	340	210	5	25	30		X	SEITZ	
	548654	15.0	N	4.0	E	17	NE	SW	NE	EXEMPT	WP	D	4/30/1995	298	150	6				X	ENDICOTT	
	518648	15.0	N	4.0	E	17	NE	SW	SW	EXEMPT	WP	D	8/18/1987	326	150	6				X	WHITEHEAD	
	521409	15.0	N	4.0	E	17	NE	SW	SW	EXEMPT	WP	D	6/16/1988	320	173	6				X	MELLON, HENRY,D	
	204910	15.0	N	4.0	E	17	NE	SW	SE	EXEMPT	WP	D		325	182	5				X	SHIFMAN	
	207960	15.0	N	4.0	E	17	NE	SE	SW	EXEMPT	WP	D									LEADER	
	583817	15.0	N	4.0	E	17	NE	SE	SW	EXEMPT	WP	D	10/26/2000	300	215	6				X	FOISSET	
	559953	15.0	N	4.0	E	17	NE	SE	SE	EXEMPT	WP	D	2/10/1997	325	220	6				X	HOGUE, RUTH,G	
	901979	15.0	N	4.0	E	17	NE	SE	SE	EXEMPT		D		360	210	5				X	HAFLEY	
	583510	15.0	N	4.0	E	17	NE	SE	SE	EXEMPT	WP	D	10/19/2000	310	245	6	15	15		X	GEORGE	
	588087	15.0	N	4.0	E	17	NE	SE	SE	EXEMPT	WP	D	11/12/2001	310	235	6				X	HAFLEY	
	588088	15.0	N	4.0	E	17	NE	SE	SE	EXEMPT	WP	D									TURMES	Y
	596924	15.0	N	4.0	E	17	NE	SE	SE	EXEMPT	WP	D,S									TURMES	Y
	559380	15.0	N	4.0	E	17	NW	NE	NE	EXEMPT	WP	D	1/23/1997	300	210	6				X	BOLTON	
	562772	15.0	N	4.0	E	17	NW	NE	NE	EXEMPT	WP	D	6/1/1997	350	190	6				X	SIMMONS	
	590342	15.0	N	4.0	E	17	NW	NE	NE	EXEMPT	WP	D	1/29/2002	360	200	6				X	LINDSTROM	
	522358	15.0	N	4.0	E	17	NW	NE	NW	EXEMPT	WP	D	9/22/1988	340	182	6				X	WILDEN, ERNEST & M,	
	558418	15.0	N	4.0	E	17	NW	NE	SW	EXEMPT	WP	D	9/20/1996	325	210	6	18	25		X	PLUTUS, LTD	
	208469	15.0	N	4.0	E	17	NW	NE	SE	EXEMPT	WP	D									SIMMONS	
	201221	15.0	N	4.0	E	17	NW	NE	SE	EXEMPT	WP	D									BALL	Y
	559382	15.0	N	4.0	E	17	NW	NW	NE	EXEMPT	WP	D	1/27/1997	300	190	6				X	IHRMAN	
	206205	15.0	N	4.0	E	17	NW	SW	NE	EXEMPT	WP	D		40	181	5				X	MENKE	
	553896	15.0	N	4.0	E	17	NW	SW	SW	EXEMPT	WP	D	1/29/1996	300	200	6				X	WATTS, SHAYNE,	
	901272	15.0	N	4.0	E	17	NW	SW	SE	EXEMPT		D	3/1/2005	280	120	5				X	KURZWEIL	
	592022	15.0	N	4.0	E	17	NW	SW	SE	EXEMPT	WP	D		200	100	6				X	WELBORN	
	522359	15.0	N	4.0	E	17	NW	SE	NW	EXEMPT	WP	D	10/10/1988	345	220	6	15	9	0	X	INGERSOLL	
	522360	15.0	N	4.0	E	17	NW	SE	NW	EXEMPT	WP	D									RYAN, MICHAEL,	Y
	531667	15.0	N	4.0	E	17	NW	SE	NW	EXEMPT	WP	D	6/26/1991	310	207	6		15		X	JOHNSTON, KAY,	
	531892	15.0	N	4.0	E	17	NW	SE	NW	EXEMPT	WP	D	7/22/1991	317	265	6	13	12		X	PLUTUS, LTD	
	645632	15.0	N	4.0	E	17	NW	SE	SW	EXEMPT	WP	D	6/13/1980	225	125	6	20	20	0	X	BUCALO JR,J J	
	649621	15.0	N	4.0	E	17	NW	SE	SW	EXEMPT	WP	D	6/30/1977	300	238	6	20	20	0		KALSEN,C	
	544321	15.0	N	4.0	E	17	NW	SE	SE	EXEMPT	WP	D	7/30/1994	320	180	6	20	20		X	CHERYLS, CHRISTY,	
94	805656	15.0	N	4.0	E	17	SW			NON-EXEMPT	WP	D									TIMMS, CHARLES,V	
	518647	15.0	N	4.0	E	17	SW	NE	NE	EXEMPT	WP	D	8/14/1987	366	210	6				X	BAKER	

Source: ADWR 55- Well Registry, 2005

APPENDIX A
ADWR WELL INVENTORY

Map ID	ADWR Reg.	T		R		Sect	Acre160	Acre 40	Acre 10	Well Type	Well Use	Water Use	Date	Depth	WL	Width	Pump Rate	Test Rate	DD	Drill Log	Owner	Cancel
	519937	15.0	N	4.0	E	17	SW	NE	NE	EXEMPT	WP	D	1/12/1988	315	133	6				X	SAXTON	
	518084	15.0	N	4.0	E	17	SW	NE	NE	EXEMPT	WP	D	6/20/1987	340	157	6				X	COPPINGER, ART,	
	553289	15.0	N	4.0	E	17	SW	NE	SW	EXEMPT	WP	D	12/21/1995	315	240	6				X	BROWN	
	520834	15.0	N	4.0	E	17	SW	NW	SW	EXEMPT	WP	D	4/24/1988	265	186	6	15	15		X	SCHWARTZ, BILL,	
	630397	15.0	N	4.0	E	17	SW	SW	NW	EXEMPT	WP	D	1/1/1932	23	20	6	25	25	0		ROWLAND	
	518361	15.0	N	4.0	E	17	SW	SW	SE	EXEMPT	WP	D					15	15			SCHWARTZ, WILBUR,	
	521349	15.0	N	4.0	E	17	SW	SW	SE	EXEMPT	WP	D									JENKINS, JAY,	Y
	503170	15.0	N	4.0	E	17	SW	SE	NE	EXEMPT	WP	D									SOHASKI,M	Y
	587274	15.0	N	4.0	E	17	SW	SE	NE	EXEMPT	WP	D	6/30/2001	240	162	5				X	SHANKS	
	523010	15.0	N	4.0	E	17	SW	SE	NW	EXEMPT	WP	D	12/15/1988	260	215	6	10	10	0	X	SIMMONS, ZANE SR,S	
	568893	15.0	N	4.0	E	17	SW	SE	NW	EXEMPT	WP	D	7/10/1998	250	156	6				X	CONNELL	
	516422	15.0	N	4.0	E	17	SW	SE	SE	EXEMPT	WP	D	1/28/1987	200	116	8				X	LUSK	
	516438	15.0	N	4.0	E	17	SW	SE	SE	EXEMPT	WP	D	2/6/1987	200	125	8				X	CLINE, RON,	
	521341	15.0	N	4.0	E	17	SE	NE	NE	EXEMPT	WP	D	10/26/1988	338	240	6				X	GEMBERLING, LARRY &,S	
	528989	15.0	N	4.0	E	17	SE	NE	NE	EXEMPT	WP	D	8/30/1990	330	220	6				X	STOWELL, JAY,	
	808466	15.0	N	4.0	E	17	SE	NE	NE	EXEMPT	WP	D									MCKINNON	
	513337	15.0	N	4.0	E	17	SE	NE	SW	EXEMPT	WP	D	2/22/1986	366	198	6				X	BENITES, RAY,	
	514538	15.0	N	4.0	E	17	SE	NE	SW	EXEMPT	WP	D	6/28/1986	366	251	6				X	LORENZ	
	513336	15.0	N	4.0	E	17	SE	NE	SW	EXEMPT	WP	D	2/17/1986	350	245	6	13	25	0	X	RABINOWE	
	512575	15.0	N	4.0	E	17	SE	NE	SE	EXEMPT	WP	D		420	330	6				X	WROBLEY	
	901355	15.0	N	4.0	E	17	SE	NE	SE	EXEMPT		D									GEORGE	
	514539	15.0	N	4.0	E	17	SE	NE	SE	EXEMPT	WP	D	7/25/1986	370	260	6				X	DEGHER	
	571813	15.0	N	4.0	E	17	SE	NE	SE	EXEMPT	WP	D									DEWITT	Y
	577691	15.0	N	4.0	E	17	SE	NE	SE	EXEMPT	WP	D	11/10/1999	395	200	4				X	THORNTON	
	585932	15.0	N	4.0	E	17	SE	NE	SE	EXEMPT	WP	D	3/13/2001	500	330	6	15	15		X	ALDREDGE	
	524394	15.0	N	4.0	E	17	SE	NW	NW	EXEMPT	WP	D	5/24/1989	302	162	6	20	15		X	MC DONALD	
	558424	15.0	N	4.0	E	17	SE	NW	NW	EXEMPT	WP	D	7/9/1996	317	205	6	12	12		X	RIGG	
	570519	15.0	N	4.0	E	17	SE	NW	SW	EXEMPT	WP	D	10/20/1998	300	175	6	15	15		X	OLESZCZUK	
	589275	15.0	N	4.0	E	17	SE	NW	SW	EXEMPT	WP	D	4/8/2002	275	180	5				X	QUATROS CORP	
	519748	15.0	N	4.0	E	17	SE	NW	SE	EXEMPT	WP	D	12/4/1987	330	220	6		15		X	HULTQUIST	
	204911	15.0	N	4.0	E	17	SE	NW	SE	EXEMPT	WP	D		300	186	5				X	MULCAIRE	
	597340	15.0	N	4.0	E	17	SE	SW	NE	EXEMPT	WP	D	4/2/2003	300	160	5	17	17		X	JACINTO	
	900266	15.0	N	4.0	E	17	SE	SW	NW	EXEMPT		D									TRES TIGRES LLC	
	524545	15.0	N	4.0	E	17	SE	SW	SW	EXEMPT	WP	D	6/8/1989	327	180	6				X	CORRAL, RICHARD,	
	570756	15.0	N	4.0	E	17	SE	SW	SW	EXEMPT	WP	D	10/13/1998	200	140	6	20	20		X	GROGAN	
	576980	15.0	N	4.0	E	17	SE	SW	SW	EXEMPT	WP	D	11/11/1999	220	120	6				X	MULCAIRE	
	580658	15.0	N	4.0	E	17	SE	SW	SW	EXEMPT	WP	D	5/5/2000	220	120	6	10	15		X	KILLEEN	
	583176	15.0	N	4.0	E	17	SE	SW	SW	EXEMPT	WP	D	10/9/2000	220	145	6				X	BARBARA H VINCENT REVOCAB	
	591100	15.0	N	4.0	E	17	SE	SW	SW	EXEMPT	WP	D		203	89	6				X	WELBORN	
	590397	15.0	N	4.0	E	17	SE	SW	SE	EXEMPT	WP	D	2/15/2002	225	160	6				X	PASCOE	
	591849	15.0	N	4.0	E	17	SE	SW	SE	EXEMPT	WP	D	5/3/2002	225	140	5	20	20		X	FOSHEE	
	598342	15.0	N	4.0	E	17	SE	SE	NE	EXEMPT	WP	D		325	120	5				X	CHALK HILL CONSTRUCTION	
	585373	15.0	N	4.0	E	17	SE	SE	NW	EXEMPT	WP	D	3/16/2001	280	182	5				X	ZNETKO	
	590398	15.0	N	4.0	E	17	SE	SE	NW	EXEMPT	WP	D									DORAME	Y
	900792	15.0	N	4.0	E	17	SE	SE	NW	EXEMPT		D	9/27/2004	350	259	5	12	12		X	BAUER	
	557915	15.0	N	4.0	E	17	SE	SE	SE	EXEMPT	WP	D	6/7/1996	240	150	6	16	16	0	X	SEDONA JOINT VENTURE LLC	
	576643	15.0	N	4.0	E	17	SE	SE	SE	EXEMPT	WP	D	11/5/1999	475	350	5				X	BAUMGARNER	
	900087	15.0	N	4.0	E	17	SE	SE	SE	EXEMPT		D		440	338	5				X	VULPIS	
	606886	15.0	N	4.0	E	18				EXEMPT	WP	D	11/17/1979	126	80	6	12	12	0		FLOOD, THOMAS,W	
	632827	15.0	N	4.0	E	18				EXEMPT	WP	D				6	20				VERDE VLY PROPERTY,	
	641964	15.0	N	4.0	E	18				EXEMPT	WP	D	10/21/1978	200	60	6	20	20	0		CANDELARIA	
	648426	15.0	N	4.0	E	18				EXEMPT	WP	IRR		150							LEE SR, TRUSTEE	
	504896	15.0	N	4.0	E	18	NE	NE	NW	EXEMPT	WP	D	3/5/1983	185	46	6	15	15		X	ANDERSON, MARY,C	
	505071	15.0	N	4.0	E	18	NE	NE	NW	EXEMPT	WP	D	3/25/1983	200	41	6			60	X	LAMB	
	650349	15.0	N	4.0	E	18	NE	NW		EXEMPT	WP	D									TULIN, ERIC,	

Source: ADWR 55- Well Registry, 2005

APPENDIX A
ADWR WELL INVENTORY

Map ID	ADWR Reg.	T		R		Sect	Acre160	Acre 40	Acre 10	Well Type	Well Use	Water Use	Date	Depth	WL	Width	Pump Rate	Test Rate	DD	Drill Log	Owner	Cancel
	650624	15.0	N	4.0	E	18	NE	NW		EXEMPT	WP	D									WARD, THOMAS,	
	806193	15.0	N	4.0	E	18	NE	NW		EXEMPT	WP	D	4/30/1979	180	28	4	20				TOON JR	
	525869	15.0	N	4.0	E	18	NE	NW	NE	EXEMPT	WP	D	10/17/1989	230	40	6				X	HILL	
	568188	15.0	N	4.0	E	18	NE	NW	NE	EXEMPT	WP	D	5/20/1998	200	50	6	35	70		X	OLSEN	
	807859	15.0	N	4.0	E	18	NE	NW	NE	EXEMPT											BOHM	
	575565	15.0	N	4.0	E	18	NE	NW	NE	EXEMPT											BOHM	
	808424	15.0	N	4.0	E	18	NE	NW	NE	EXEMPT	WP	D		250							TAMENY	
	645341	15.0	N	4.0	E	18	NE	NW	NW	EXEMPT	WP	D	2/1/1977	165	65	6	25	25	0		PEARCE,R H	
	642436	15.0	N	4.0	E	18	NE	NW	NW	EXEMPT	WP	D	12/1/1977	160	34	6	30	30	0		WILKINSON,I I	
	516087	15.0	N	4.0	E	18	NE	NW	NW	D, S, E	WP	D	12/1/1986	150	56	6	20	20	0	X	JACOBS, TODD,	
	641548	15.0	N	4.0	E	18	NE	SW		EXEMPT	WP	D	9/29/1979	145	55	6	18	18	0		SKAGGS	
95	609342	15.0	N	4.0	E	18	NE	SW	NE	NON-EXEMPT	WP	D,MUN	3/1/1995	440	1	8	100	100			CITY OF COTTONWOOD	
	500569	15.0	N	4.0	E	18	NE	SW	NW	EXEMPT	WP	D	8/5/1981	156	60	6	12	12		X	RUNZLER, WILLIAM,H	
	650369	15.0	N	4.0	E	18	NE	SW	NW	EXEMPT	WP	D	8/1/1981	151	60	6	10	10	0		LEVACK,M	
	650736	15.0	N	4.0	E	18	NE	SW	NW	EXEMPT	WP	D	10/8/1980	118	85	1	30	30	0		KOVACS, ANDREW,	
	801363	15.0	N	4.0	E	18	NE	SW	NW	EXEMPT	WP	D	10/26/1979	145	56	6	30	30	0		WILLIAMS	
	808190	15.0	N	4.0	E	18	NE	SW	NW	EXEMPT	WP	D	1/1/1977								HOFFER	
	601232	15.0	N	4.0	E	18	NE	SW	SW	EXEMPT	WP	D	2/4/1976	128	70	6	15	15	0		SIMMONS, MARGIE,L	
	611514	15.0	N	4.0	E	18	NE	SW	SW	EXEMPT	WP	D	4/23/1980	152		6	9	9	0		BROCK, JURLINE,O	
	622581	15.0	N	4.0	E	18	NE	SW	SW	EXEMPT	WP	D	9/15/1979	145	75	6					STRACHE,F	
	648167	15.0	N	4.0	E	18	NE	SW	SW	EXEMPT	WP	D	5/9/1975	130	28	6	20	20	0		GASTENT,J C	
	501627	15.0	N	4.0	E	18	NE	SW	SE	EXEMPT	WP	D	12/8/1981	110	21	6	15	15	0	X	DE LA O, ALBERT,	
	086199	15.0	N	4.0	E	18	NE	SE	NE	EXEMPT	WP	D	4/1/1981	126	30	6					NIETO	
	601635	15.0	N	4.0	E	18	NE	SE	NE	EXEMPT	WP	D	5/22/1979	140	106	6	12	12	0		SCARBROUGH	
	803450	15.0	N	4.0	E	18	NE	SE	NE	EXEMPT	WP	IRR,D,S	11/18/1971	305	225	8					HELDREICH, DIANE,	
	540552	15.0	N	4.0	E	18	NE	SE	NE	EXEMPT	WP	D	10/8/1993	220	180	4	20	20	0	X	LONGSTRETH	
	611674	15.0	N	4.0	E	18	NE	SE	SW	EXEMPT	WP	D	11/2/1979	115	27	6	28	28	0		CORMAN,R A	
	632032	15.0	N	4.0	E	18	NE	SE	SW	EXEMPT	WP	D	2/25/1976	115	30	6	30	30	0		JOHNSON,B H	
	633034	15.0	N	4.0	E	18	NE	SE	SW	EXEMPT	WP	D	2/2/1976	210	65	6	20	20	0		HERBERT, JAMES,S	
	505382	15.0	N	4.0	E	18	NE	SE	SW	EXEMPT	WP	D	5/21/1983	100	20	6	10	10		X	GUTZWILLER, RICHARD,B	
	644782	15.0	N	4.0	E	18	NE	SE	SW	EXEMPT	WP	D	10/25/1979	100	27	6	33	33	0		HARRIS, BENNETT& T,	
	087425	15.0	N	4.0	E	18	NE	SE	SE	EXEMPT	WP	D	1/1/1981	109	38	6					WANDS, JERRY,L	
	087426	15.0	N	4.0	E	18	NE	SE	SE	EXEMPT	WP	D	3/1/1981	110	47	6				X	SCOTT	
	516057	15.0	N	4.0	E	18	NE	SE	SE	EXEMPT	WP	D	11/20/1986	100	20	6	12	12	0	X	SCIONTI, MARIO,P	
	627440	15.0	N	4.0	E	18	NE	SE	SE	EXEMPT	WP	D	11/26/1979	140	85	6	20	20	0		KEIM ET AL,L H	
96	510707	15.0	N	4.0	E	18	NW	NE	NE	NON-EXEMPT	WP	IRR,D	5/7/1985	150	60	8				X	WEBSTER, LAURA,A	
	512657	15.0	N	4.0	E	18	NW	NE	NE	EXEMPT	WP	D	10/22/1986	150	60	6				X	PARKER, KARL,	
97	510177	15.0	N	4.0	E	18	NW	NE	NE	NON-EXEMPT	WP	IRR,D	2/12/1985	200	45	8				X	FRENCH, JOHN,	
98	512656	15.0	N	4.0	E	18	NW	NE	NE	NON-EXEMPT	WP	D	2/26/1986	150	51	6				X	GARRABRANT, WILMA,F	
99	512658	15.0	N	4.0	E	18	NW	NE	NE	NON-EXEMPT	WP	D	2/19/1986	150	65	6				X	GARRABRANT	
	593712	15.0	N	4.0	E	18	NW	NE	NE	EXEMPT	WP	D		260	70	6				X	SCOTT	
	594603	15.0	N	4.0	E	18	NW	NE	NE	EXEMPT	WP	D		200	37	6				X	SCOTT	
	203964	15.0	N	4.0	E	18	NW	NE	SE	EXEMPT	WP	D	8/23/2004	150	44	6				X	RICHEY	
	629488	15.0	N	4.0	E	18	NW	NW	NE	EXEMPT	WP	D	5/31/1978	220	44	6	25	25	0		HELMS,E R	
	504313	15.0	N	4.0	E	18	NW	NW	NW	EXEMPT	WP	D	11/6/1982	200	58	6	15	15		X	BRADFORD	
	510583	15.0	N	4.0	E	18	NW	NW	NW	EXEMPT	WP	D	3/21/1985	155	40	6				X	BRUNDA,P M	
	808850	15.0	N	4.0	E	18	NW	SW	NE	EXEMPT	WP	D	1/1/1980								PAULSEN	
	801754	15.0	N	4.0	E	18	NW	SE	NE	EXEMPT	WP	D	1/31/1979	155	30	6	35	35	0		LOCHER, HARRIET,	
	524653	15.0	N	4.0	E	18	NW	SE	NW	EXEMPT	WP	D	1/23/1990	150	60	6				X	THOMAS, FRANCES,	
	633327	15.0	N	4.0	E	18	NW	SE	NW	EXEMPT	WP	D									KAIBAB DEVEL CO,	
	509582	15.0	N	4.0	E	18	NW	SE	SE	EXEMPT	WP	D	11/21/1984	140	50	6	15	20		X	COCHERAN,J L	
	511190	15.0	N	4.0	E	18	NW	SE	SE	EXEMPT	WP	D	5/21/1985	130	39	6	15	15		X	ROCHA,D	
	516860	15.0	N	4.0	E	18	NW	SE	SE	EXEMPT	WP	D									FENLON, ED SR.,	Y
	522078	15.0	N	4.0	E	18	NW	SE	SE	EXEMPT	WP	D	8/17/1988	118	110	6				X	SCARBROUGH, R.L.,	
	532144	15.0	N	4.0	E	18	NW	SE	SE	EXEMPT	WP	D	8/10/1991	225	145	6				X	HEATH, SHELDON,	

Source: ADWR 55- Well Registry, 2005

APPENDIX A
ADWR WELL INVENTORY

Map ID	ADWR Reg.	T		R		Sect	Acre160	Acre 40	Acre 10	Well Type	Well Use	Water Use	Date	Depth	WL	Width	Pump Rate	Test Rate	DD	Drill Log	Owner	Cancel
100	609343	15.0	N	4.0	E	18	NW	SE	SE	NON-EXEMPT	WP	D,MUN	2/17/1971	450	55	8	50	50	0		CITY OF COTTONWOOD	
	650825	15.0	N	4.0	E	18	NW	SE	SE	EXEMPT	WP	D	1/28/1980	155	76	6	12	12	0		ROGERS,W H	
	516726	15.0	N	4.0	E	18	NW	SE	SE	EXEMPT	WP	D	2/28/1987	150	70	8				X	HEALTH, SHELDON,	
	505437	15.0	N	4.0	E	18	SW	NE	SE	EXEMPT	WP	D	5/25/1983	134	28	6				X	WELSH & OLSON	
	087431	15.0	N	4.0	E	18	SW	SW	NE	EXEMPT	WP	D		170	100	6	24	24	0		MACKENTHUN	
	603204	15.0	N	4.0	E	18	SW	SW	NE	EXEMPT	WP	D	5/11/1979	160	95	6	18	18	0		HOLT,C E	
	512221	15.0	N	4.0	E	18	SW	SE	NE	EXEMPT	WP	D									ROGERS,J	Y
	602541	15.0	N	4.0	E	18	SW	SE	NW	EXEMPT	WP	D	12/5/1979	143	35	6	10	10	0		LEBRUN,E J	
	623351	15.0	N	4.0	E	18	SW	SE	NW	EXEMPT	WP	D	6/13/1980	145	53	6					SVALENT,W M	
101	625200	15.0	N	4.0	E	18	SE			NON-EXEMPT	WP	IRR,S									UNIVERSITY OF LAVERNE	
102	625201	15.0	N	4.0	E	18	SE			NON-EXEMPT	WP	IRR,S									UNIVERSITY OF LAVERNE	
	644265	15.0	N	4.0	E	18	SE			EXEMPT	WP	D	11/17/1972	200	105	6	20	20	0		GOLDENSTEIN, JOHN,A	
103	616700	15.0	N	4.0	E	18	SE	NE		NON-EXEMPT	WP	IRR	5/27/1974	180	20	8	100	100	0		COOK	
	645340	15.0	N	4.0	E	18	SE	NE		EXEMPT	WP	D		145	50	6					EADE,R E	
	645383	15.0	N	4.0	E	18	SE	NE		EXEMPT	WP	D	3/28/1967	148	43	6	20	20	0		DAVIS,W L	
	649667	15.0	N	4.0	E	18	SE	NE		EXEMPT	WP	D	1/1/1968	70	40	6	35	35	0		COOK	
	806729	15.0	N	4.0	E	18	SE	NE		EXEMPT	WP	D	12/31/1976	145	50	6					COBLE & CLARK	
	802586	15.0	N	4.0	E	18	SE	NE		EXEMPT	WP	D	11/18/1978	122	20	6	34	34	0		ROWLAND	
104	616701	15.0	N	4.0	E	18	SE	NE		NON-EXEMPT	WP	IRR	5/27/1974	180	20	8	100	100	0		ADAMSET AL,S T	
	544093	15.0	N	4.0	E	18	SE	NE	NE	EXEMPT	WP	D	6/17/1994	100	37	6	16	16		X	JACKLEY	
	637425	15.0	N	4.0	E	18	SE	NE	NW	EXEMPT	WP	D	1/1/1978	250	22	8	35	35	0		FREDRICK	
	637426	15.0	N	4.0	E	18	SE	NE	NW	EXEMPT	WP	D		268	28	6	35	35	0		HOWARD,P G	
	801708	15.0	N	4.0	E	18	SE	NE	SW	EXEMPT	WP	D	1/1/1974	118	25	6					BARBEAU	
105	513708	15.0	N	4.0	E	18	SE	NE	SE	NON-EXEMPT	WP	D	3/16/1986	90	30	6	15	15		X	PATTERSON,R A	
	528318	15.0	N	4.0	E	18	SE	NE	SE	EXEMPT	WP	D									GODWIN, CHARLIE,	Y
	550743	15.0	N	4.0	E	18	SE	NE	SE	EXEMPT	WP	D	7/19/1995	100		6				X	HAWKSLEY	
	505907	15.0	N	4.0	E	18	SE	NE	SE	EXEMPT	WP	D	4/1/1981	126	25	6	20	20		X	BAXTER, M IRENE,	
	513665	15.0	N	4.0	E	18	SE	NE	SE	EXEMPT	WP	D	3/13/1986	91	20	6	15	15		X	WRIGHT	
	516640	15.0	N	4.0	E	18	SE	NE	SE	EXEMPT	WP	D	2/18/1987	91	29	6	20	10		X	PATTERSON, RICHARD,	
	597628	15.0	N	4.0	E	18	SE	NW	NW	EXEMPT	WP	D									GARRETT	
	502963	15.0	N	4.0	E	18	SE	NW	NW	EXEMPT	WP	D	5/11/1982	185	61	6	15	15	0	X	ELFVIN, JESSIE,K	
	087380	15.0	N	4.0	E	18	SE	SW	NE	EXEMPT	WP	D	1/1/1981	165	42	6		24			NODLAND, ARLENE,FAYE,	
	803016	15.0	N	4.0	E	18	SE	SW	NW	EXEMPT		D,IRR	1/1/1975	125		6					DICK HAL,J	
	637122	15.0	N	4.0	E	18	SE	SE		EXEMPT	WP	D	4/13/1972	200	105	7	34	34	0		MICHAEL	
	646038	15.0	N	4.0	E	18	SE	SE		EXEMPT	WP	D									HILL, DONALD,R	
	902295	15.0	N	4.0	E	18	SE	SE	NE	EXEMPT		D									CATALANO	
106	625202	15.0	N	4.0	E	18	SE	SE	NW	NON-EXEMPT	WP	IRR,S									KLEIN	
	481788	15.0	N	4.0	E	18	SE	SE	NW	EXEMPT	ABAN	D									RAY	Y
	202806	15.0	N	4.0	E	18	SE	SE	SW	EXEMPT	WP	D		235	80	6				X	LOUNSBURY	
	600778	15.0	N	4.0	E	19	NE	NE		EXEMPT	WP	D	1/1/1974	103		4	15	15	0	N	OWENS	
	518766	15.0	N	4.0	E	19	NE	NE	NE	EXEMPT	WP	D	8/28/1987	170	65	6				X	FARRELL	
	560201	15.0	N	4.0	E	19	NE	NE	NE	EXEMPT	WP	D	1/23/1997	160	72	7				X	WEEKS, JIM,E	
	602126	15.0	N	4.0	E	19	NE	NE	NE	EXEMPT	WP	D	5/3/1976	155	80	6	3	3	0		ADAMS	
	630558	15.0	N	4.0	E	19	NE	NE	NE	EXEMPT	WP	D	5/15/1977	170	84	6	30	30	0		SHIHADY,G	
	645160	15.0	N	4.0	E	19	NE	NE	NE	EXEMPT	WP	D	5/1/1971	125	75	6	30	30	0		TISSAW,D N	
	560225	15.0	N	4.0	E	19	NE	NE	NE	EXEMPT	WP	D	1/23/1997	160	68	7	20	35	0	X	REED, KEVIN,W	
107	602127	15.0	N	4.0	E	19	NE	NE	NW	NON-EXEMPT	WP	IRR,S,D	7/5/1960	60	25	12					SIKES	
	562353	15.0	N	4.0	E	19	NE	NE	SW	EXEMPT	WP	D	5/29/1997	200	25	6				X	KOWAL, MARCIA,	
108	602129	15.0	N	4.0	E	19	NE	NE	SW	NON-EXEMPT	WP	IRR,S,D	6/1/1979	150	56	8	75	75	0		DEAN	
	511664	15.0	N	4.0	E	19	NE	NE	SE	EXEMPT	WP	D	9/14/1985	160	60	6	20	20	0	X	KREMPLE,C L	
	630009	15.0	N	4.0	E	19	NE	NE	SE	EXEMPT	WP	D	8/25/1973	100	45	6	30	30	0		TISSAW,G A	
	645161	15.0	N	4.0	E	19	NE	NE	SE	EXEMPT	WP	D	4/1/1971	90	55	6	20	20	0		TISSAW,D N	
109	602128	15.0	N	4.0	E	19	NE	NW	NE	NON-EXEMPT	WP	D,IRR		152	35	6	30	30	0		SIKES	
	563084	15.0	N	4.0	E	19	NE	NW	NW	EXEMPT	WP	D	8/19/1997	330	255	6	10	10		X	ELLIS, MAYNARD III,E	
	558123	15.0	N	4.0	E	19	NE	NW	SE	EXEMPT	WP	D	7/1/1996	200	21	6	16	16		X	SIKES	

Source: ADWR 55- Well Registry, 2005

APPENDIX A
ADWR WELL INVENTORY

Map ID	ADWR Reg.	T		R		Sect	Acre160	Acre 40	Acre 10	Well Type	Well Use	Water Use	Date	Depth	WL	Width	Pump Rate	Test Rate	DD	Drill Log	Owner	Cancel
	645264	15.0	N	4.0	E	19	NE	SE		EXEMPT	WP	D	8/11/1972	100	25	6					SIKES	
	556327	15.0	N	4.0	E	19	NE	SE	NE	EXEMPT	WP	D	11/26/1996	150	60	6				X	CHAMBLISS, TRAVIS,	
	807802	15.0	N	4.0	E	20				EXEMPT	WP	D									STANDISH	
110	901959	15.0	N	4.0	E	20	NE	NW	NW	NON-EXEMPT		IRR,D									PREDMORE	
	606877	15.0	N	4.0	E	20	NE	SE	SW	EXEMPT	WP	D	7/13/1961	110	32	8	28				RAMBO, MARGARET,A	
	606878	15.0	N	4.0	E	20	NE	SE	SW	EXEMPT	WP	D	7/18/1961	100	32	8	28				CRICKS	
111	611260	15.0	N	4.0	E	20	NW	SE		NON-EXEMPT	WP	IRR									NEZ	
	205366	15.0	N	4.0	E	20	NW	SE	SE	EXEMPT	WP	D		275	54	5				X	ROGERS JR	
	200329	15.0	N	4.0	E	20	NW	SE	SE	EXEMPT	WP	D									COCHRANE	Y
	200647	15.0	N	4.0	E	20	NW	SE	SE	EXEMPT	WP	D	12/1/2003	285	82	5	18	20		X	EARL	
	203203	15.0	N	4.0	E	20	NW	SE	SE	EXEMPT	WP	D		275	80	5				X	BRING	
	606902	15.0	N	4.0	E	20	SW			EXEMPT	WP	D	7/16/1963	100	37	8	25	25	0		WALDEN, BILL & L,G A	
	632689	15.0	N	4.0	E	20	SW			EXEMPT	WP	D	4/30/1979	206	31	8	33	33	0		FUTRAL,J	
	632690	15.0	N	4.0	E	20	SW			EXEMPT	WP	D	1/1/1930	70	60	4	35	35	0		FUTRAL MD,J E	
112	611259	15.0	N	4.0	E	20	SW	NE		NON-EXEMPT	WP	IRR									CLANAHAN	
	209088	15.0	N	4.0	E	20	SW	NE	NE	EXEMPT	WP	D									SCHMID	
	200476	15.0	N	4.0	E	20	SW	NE	NE	EXEMPT	WP	D		200	74	7				X	HILLMAN JR	
	900483	15.0	N	4.0	E	20	SW	NE	NE	EXEMPT		D	6/13/2004	200	74	6	20	20		X	MABERY	
	900515	15.0	N	4.0	E	20	SW	SE	NW	EXEMPT		D	6/14/2004	200	62	6	10	10		X	OSBORN	
	803058	15.0	N	4.0	E	20	SW	SE	SW	EXEMPT	WP	IRR,D	1/1/1959		50	6	10				RICKER, RICHARD,B	
113	901962	15.0	N	4.0	E	20	SE	SW	NW	NON-EXEMPT		IRR,D									PREDMORE	
114	901963	15.0	N	4.0	E	20	SE	SW	NW	NON-EXEMPT		IRR,D									PREDMORE	
115	901960	15.0	N	4.0	E	20	SE	SW	NW	NON-EXEMPT		IRR,D	4/15/2005	300	61	10				X	PREDMORE	
	631839	15.0	N	4.0	E	21	SW	NW		EXEMPT	WP	D	8/1/1955	42	35	6	10	10	0		THEDE,J J	
	631840	15.0	N	4.0	E	21	SW	NW		EXEMPT	WP	D	7/3/1957	85	73	6	10	10	0		THEDE,J J	
	637445	15.0	N	4.0	E	22				EXEMPT	WP	D				4	25				FTG INC,	
	641713	15.0	N	4.0	E	22	NE	NE		EXEMPT	WP	D	1/1/1960	158	30	8	35	35	0		ZANZUCCHI	
	641714	15.0	N	4.0	E	22	NE	NE		EXEMPT	WP	D	1/1/1968	152	30	8	35	35	0		ZANZUCCHI	
	641908	15.0	N	4.0	E	22	NE	NE	NE	EXEMPT	WP	D	10/10/1978	87	45	6	10	10	0		POKHIAS,W E	
	538198	15.0	N	4.0	E	22	NE	NE	NW	EXEMPT	WP	D									SCOTT	Y
	545340	15.0	N	4.0	E	22	NE	NE	NW	EXEMPT	WP	D	10/18/1994	105	15	6				X	COSBY, DAVE,	
	802683	15.0	N	4.0	E	22	NE	NE	SW	EXEMPT	WP	D,IRR	1/1/1940								DAVIS, NEIL,S	
	803353	15.0	N	4.0	E	22	NE	NE	SW	EXEMPT	WP	D									RUSCH	
	502985	15.0	N	4.0	E	22	NE	NE	SE	EXEMPT	WP	D	6/19/1982				10	10	0	X	MORGAN,H P	
116	624905	15.0	N	4.0	E	22	NE	NE	SE	NON-EXEMPT	WP	IRR,S	1/1/1978	312		8	7	7	0		BIRKHOLZ	
	803362	15.0	N	4.0	E	22	NE	NW	NW	EXEMPT	WP	D	9/1/1978	80		6	20				POKHIAS, WILLIAMS,	
	624907	15.0	N	4.0	E	22	NW	NE	NE	EXEMPT	WP	D,IRR,S	1/1/1979	183	38	6	35	35	0		MILLS, RICHARD,S	
	564359	15.0	N	4.0	E	22	NW	NE	NW	EXEMPT	WP	D									CROZIER, JOAN,	
	624908	15.0	N	4.0	E	22	NW	NE	NW	EXEMPT	WP	IRR,D,S	1/1/1976	367		8	35				CROZIER, JOAN,M	
	512358	15.0	N	4.0	E	22	NW	NE	NW	EXEMPT	WP	D	10/15/1985	190	90	6		20		X	ZANG	
	602876	15.0	N	4.0	E	22	NW	NW		EXEMPT	WP	D	12/4/1979	300	10	4					FULLER	
	519387	15.0	N	4.0	E	22	NW	NW	NE	EXEMPT	WP	D									NEULEIB, JAMES,F	Y
	502118	15.0	N	4.0	E	22	NW	NW	NE	EXEMPT	WP	D		220							BARRETT,G D	Y
	575023	15.0	N	4.0	E	22	NW	NW	NE	EXEMPT	WP	D	7/24/1999	100	55	6				X	RINALDI	
	586940	15.0	N	4.0	E	22	NW	NW	NW	EXEMPT	WP	D		300	110	6				X	WYMORE	
117	806468	15.0	N	4.0	E	22	NW	NW	SE	NON-EXEMPT	WP	D,IRR	12/31/1943	250		8	6				PRESCOTT, DIANE,B	
	502117	15.0	N	4.0	E	22	NW	SW	NW	EXEMPT	WP	D	2/19/1982	180	50	6				X	MONTE WYMORE PROPERT,	
	580905	15.0	N	4.0	E	22	NW	SW	SW	EXEMPT	WP	D	7/19/2000	200	50	6				X	WINDHAM	
	513854	15.0	N	5.0	E	2	NW	NE	SW	EXEMPT	WP	D	4/19/1986	302	99	6	40	50		X	REED, KEVIN,W	
	085396	15.0	N	5.0	E	2	NW	NW	SE	EXEMPT	WP	D									GILLESPIE,A	Y
	501559	15.0	N	5.0	E	2	NW	NW	SE	EXEMPT	WP	D		250							GILLESPIE,A	Y
	645764	15.0	N	5.0	E	2	NW	NW	SE	EXEMPT	WP	D	6/1/1979	320	70	6	15	15	0		DYCK,P A	
118	605683	15.0	N	5.0	E	2	SW	SW	NE	NON-EXEMPT	WP	IRR,S		199	89	6	12	12	0		WARNES,R V	
	631489	15.0	N	5.0	E	2	SW	SW	NE	EXEMPT	WP	D	5/4/1980	170	21	6	15	15	0		AYARS,G A	
	629564	15.0	N	5.0	E	2	SW	SW	NE	EXEMPT	WP	D	5/16/1978	245	20	6	36	36	0		KRAETZ,J R	

Source: ADWR 55- Well Registry, 2005

APPENDIX A
ADWR WELL INVENTORY

Map ID	ADWR Reg.	T		R		Sect	Acre160	Acre 40	Acre 10	Well Type	Well Use	Water Use	Date	Depth	WL	Width	Pump Rate	Test Rate	DD	Drill Log	Owner	Cancel
	634583	15.0	N	5.0	E	2	SW	SW	NW	EXEMPT	WP	D	5/4/1977	225		6	22	22	0		FLITTNER,F A	
	627337	15.0	N	5.0	E	6	NW	SW	SE	EXEMPT	WP	S	1/1/1942			6					COCONINO NATL FOREST,	
	505754	15.0	N	5.0	E	15	SW	SE	SE	NON-EXEMPT	WP	IRR,D									MABERY,C T	Y
	508477	15.0	N	5.0	E	15	SW	SE	SE	NON-EXEMPT	WP	IRR,D									MABERY & BARNES,	Y
	511972	15.0	N	5.0	E	15	SW	SE	SE	NON-EXEMPT	WP	IRR,D									BARNES	Y
	585316	15.0	N	5.0	E	15	SE	NW	SW	EXEMPT	WP	D	5/22/2001	560	440	5	12	20		X	RDM CONSTRUCTION	
	627329	15.0	N	5.0	E	19	NE			EXEMPT	WP	S									COCONINO NATL FOREST,	
	627327	15.0	N	5.0	E	19	SW			EXEMPT	WP	S									COCONINO NATL FOREST,	
	643012	15.0	N	5.0	E	19	SW	NW	SE	EXEMPT	WP	D	1/1/1965	240	180	6	15	15	0		PICKUP, LOWELL,	
	641329	15.0	N	5.0	E	20	NE	NW		EXEMPT	WP	D,S		600	100	8	30				APACHE MAID RANCH LTD	
	519065	15.0	N	5.0	E	20	NW	NE	SW	EXEMPT	WP	D,S	10/17/1987	500	272	8		25		X	APACHE MAID RANCH LTD	
	629875	16.0	N	3.0	E	12	SE	SW	SE	EXEMPT	WP	D	11/12/1978	300	190	6	20	20	0		CLIFTON	
	509965	16.0	N	3.0	E	13	NE	NE	NE	D, S, E	WP	D	1/2/1985	280	35	7	1	1	0	X	MOSS,D J	
	516750	16.0	N	3.0	E	24	NE	NE	NE	EXEMPT	WP	D	2/20/1987	275	225	6				X	SNOWBIRD ASSOC LLC	
	614257	16.0	N	3.0	E	36	SW	SE	SW	EXEMPT	WP	S	1/1/1979	1200		12					AZ STATE LAND DEPT,	
	614258	16.0	N	3.0	E	36	SE	NE	SW	EXEMPT			1/1/1974	265	28	12					AZ STATE LAND DEPT,	
	620885	16.0	N	3.0	E	36	SE	NE	SW	EXEMPT	WP	S	12/1/1974	265	160	8					MORRISON, KENNETH,C	
	649703	16.0	N	4.0	E	11	SW			EXEMPT	WP	D	6/7/1978	85	12	6	34	34	0		HATCH,V R	
	516859	16.0	N	4.0	E	11	SW	SW	NW	NON-EXEMPT	WP	IRR,D									MORRIS, PHIL,W	Y
	555845	16.0	N	4.0	E	11	SW	SW	NW	EXEMPT	WP	D	4/8/1996	176	75	6				X	SIMS, DANIEL,	
	526838	16.0	N	4.0	E	11	SW	SW	SW	EXEMPT	WP	D	5/21/1990	408	73	16	60	60	0	X	HARPER, OLIVER,	
	500435	16.0	N	4.0	E	11	SW	SW	SW	EXEMPT	WP	D	1/1/1981	70	10	6		15	0	X	SIMS, DANIEL,	
	647683	16.0	N	4.0	E	11	SW	SW	SW	EXEMPT	WP	D	1/1/1965	130							SEDONA HIDDEN VALLEY LIMI	
	650314	16.0	N	4.0	E	11	SW	SW	SW	EXEMPT	WP	D	2/1/1979	111	34	6	20	20	0	X	MCCAIN, CINDY,	
	576281	16.0	N	4.0	E	11	SW	SW	SE	EXEMPT	WP	D	8/13/1999	285	154	6				X	BLOCK	
	802427	16.0	N	4.0	E	11	SE	SW	NW	EXEMPT	WP	D	1/1/1977	98		6	20				MCCAIN	
	637521	16.0	N	4.0	E	13	NW			EXEMPT	WP	D,IRR									AIELLO, ANTHONY & D,	
	519647	16.0	N	4.0	E	13	NW	NW	SW	EXEMPT	WP	D	2/15/1988	150	50	6	15	15		X	AMIGO DE VINO INC	
	631074	16.0	N	4.0	E	13	NW	SW		EXEMPT	WP	D	1/1/1960	150		8					VARDE & MARCUS	
	642364	16.0	N	4.0	E	13	NW	SW	NW	EXEMPT	WP	D	1/1/1974								MOSIER, JACKIE,L	
119	610167	16.0	N	4.0	E	13	NW	SW	SW	NON-EXEMPT	WP	IRR,D		100	30	6	45	45	0		NUNEZ,R	
	509690	16.0	N	4.0	E	13	NW	SE	SE	EXEMPT	WP	D	1/4/1985	85	25	8	30	30	0	X	BIGELOW,D L	
	509691	16.0	N	4.0	E	13	NW	SE	SE	EXEMPT	WP	D	12/31/1984	100	11	8	35	35	0	X	AIELLO, ANTHONY,R	
120	563866	16.0	N	4.0	E	14	NE	NE	SE	NON-EXEMPT	WP	COM,S									MARCUS, JON,R	
121	563865	16.0	N	4.0	E	14	NE	SE	NE	NON-EXEMPT	WP	IRR		240	60	12				X	MARCUS	
	571921	16.0	N	4.0	E	14	SW	NE	SW	NON-EXEMPT											GROVES	Y
	582019	16.0	N	4.0	E	14	SW	NE	SE	EXEMPT	WP	D	8/22/2000	243	55	6				X	TIMBERCREEK CO LLC	
122	631218	16.0	N	4.0	E	14	SW	SW		NON-EXEMPT	WP	D,IRR,REC	7/20/1976	65	59	8					JOHNSON ET AL,W N	
	207686	16.0	N	4.0	E	14	SW	SW	NE	EXEMPT	WP	D									GISBORNE	
	580473	16.0	N	4.0	E	14	SW	SW	NE	EXEMPT	WP	D									GOODMAN	Y
	640692	16.0	N	4.0	E	14	SW	SW	NW	EXEMPT	WP	D	8/25/1973	190	20	6	20	20	0	X	STREVER	
	585192	16.0	N	4.0	E	14	SW	SW	NW	EXEMPT	WP	D	1/28/2001	100	40	8				X	FREY	
	501698	16.0	N	4.0	E	14	SW	SE	NE	NON-EXEMPT	WP	IRR									GROVES, JACK,E	Y
	504547	16.0	N	4.0	E	14	SW	SE	NE	NON-EXEMPT	WP	D,S									GROVES, JACK,E	Y
	507270	16.0	N	4.0	E	14	SW	SE	NE	NON-EXEMPT	WP	IRR,D,S									GROVES, JACK,E	Y
	516416	16.0	N	4.0	E	14	SW	SE	NE	NON-EXEMPT	WP	IRR,D,S									GROVES, JACK,	Y
	519919	16.0	N	4.0	E	14	SW	SE	NE	NON-EXEMPT	WP	IRR,D,S									GROVES, JACK,	Y
	523158	16.0	N	4.0	E	14	SW	SE	NE	NON-EXEMPT	WP	IRR,D,S									GROVES, JACK,	Y
	530561	16.0	N	4.0	E	14	SW	SE	NE	NON-EXEMPT	WP	IRR,D,S									GROVES, JACK,	Y
	534006	16.0	N	4.0	E	14	SW	SE	NE	NON-EXEMPT	WP	IRR,D,S									GROVES, JACK,	Y
	537755	16.0	N	4.0	E	14	SW	SE	NE	NON-EXEMPT	WP	IRR,D									GROVES, JACK,	Y
	542023	16.0	N	4.0	E	14	SW	SE	NE	NON-EXEMPT	WP	IRR,D,S									GROVES, JACK,	Y
	510245	16.0	N	4.0	E	14	SW	SE	NE	NON-EXEMPT	WP	IRR,D,S									GROVES, JACK,E	Y
	513069	16.0	N	4.0	E	14	SW	SE	NE	NON-EXEMPT	WP	IRR,D,S									GROVES, JACK,	Y
	527033	16.0	N	4.0	E	14	SW	SE	NE	NON-EXEMPT	WP	IRR,D,S									GROVES, JACK,	Y

Source: ADWR 55- Well Registry, 2005

APPENDIX A
ADWR WELL INVENTORY

Map ID	ADWR Reg.	T		R		Sect	Acre160	Acre 40	Acre 10	Well Type	Well Use	Water Use	Date	Depth	WL	Width	Pump Rate	Test Rate	DD	Drill Log	Owner	Cancel
	901949	16.0	N	4.0	E	14	SW	SE	NE	EXEMPT		D									ESTRELLADO NOCHES LLC	
	086519	16.0	N	4.0	E	14	SW	SE	NE	NON-EXEMPT	WP	D									GROVES, JACK,E	Y
	580474	16.0	N	4.0	E	14	SW	SE	NE	EXEMPT	WP	D	6/15/2000	278	25	6		350	0	X	SHOSTEAD	
123	608327	16.0	N	4.0	E	14	SW	SE	NW	NON-EXEMPT	WP	IRR,S,D	4/9/1954	212		10					DANCING APACHE SPRING INC	
	561785	16.0	N	4.0	E	14	SE	NE	NE	EXEMPT	WP	D	4/16/1997	175	65	6				X	ABBOTT	
	646511	16.0	N	4.0	E	14	SE	NE	SE	EXEMPT	WP	D	7/1/1971	117	110	6	22	22	0		STRYKER	
124	802619	16.0	N	4.0	E	15	NE	SE	SE	NON-EXEMPT	WP	IRR,D	5/30/1979	80	12	8	60	60	0		PATTERSON,A M	
	565384	16.0	N	4.0	E	15	SW	SW	NW	EXEMPT	WP	D									DAVIS	Y
125	643703	16.0	N	4.0	E	15	SW	SW	SW	NON-EXEMPT	WP	IRR	11/3/1975	268	44	10	300	300	0		SPRING CREEKLAND COMPANY	
	646512	16.0	N	4.0	E	15	SE			EXEMPT	WP	D	1/1/1949	30	20	36					STRYKER, SALLY,B	
	201185	16.0	N	4.0	E	15	SE	NE	NW	EXEMPT	WP	D	11/25/2003	200	50	7	10	7		X	GRAY	
	631492	16.0	N	4.0	E	15	SE	SE		EXEMPT	WP	D		25	4	4	10	10	0		CARR	
	650161	16.0	N	4.0	E	15	SE	SE		EXEMPT	WP	IRR,D		65	27	6	35	35	0		PIPPIN,R O	
	802307	16.0	N	4.0	E	15	SE	SE		EXEMPT	WP	D	1/1/1945								MURDOCK,I M	
	515056	16.0	N	4.0	E	15	SE	SE	NE	EXEMPT	WP	D	8/27/1986	56	25	6	25	25	0	X	TAVASCI, PAT,	
	567559	16.0	N	4.0	E	15	SE	SE	NE	EXEMPT	WP	D	1/29/1999	45	12	6				X	KINNEY	
	087528	16.0	N	4.0	E	15	SE	SE	NW	EXEMPT	WP	D	1/1/1981	52		8		32	0		CRONIN, PETER,	
126	610115	16.0	N	4.0	E	15	SE	SE	NW	NON-EXEMPT	WP	D,IRR	9/25/1969	85	55	6	50	50	0		KAPP & WENZLER	
127	611148	16.0	N	4.0	E	15	SE	SE	NW	NON-EXEMPT	WP	D	1/1/1949	180	22	8	45	45	0		PUEBLO HILLS H GROUP,	
	647642	16.0	N	4.0	E	15	SE	SE	NW	EXEMPT	WP	D	1/1/1972		30	6	20	20	0		HALLIDAY	
	562583	16.0	N	4.0	E	15	SE	SE	SW	EXEMPT	WP	D		165	120	7				X	WHITE	
	591583	16.0	N	4.0	E	15	SE	SE	SW	EXEMPT	WP	D									BURTON	Y
	509984	16.0	N	4.0	E	15	SE	SE	SE	EXEMPT	WP	D	5/5/1985	200	90	6	20	35	0	X	BAILEY	
	529519	16.0	N	4.0	E	15	SE	SE	SE	EXEMPT	WP	D									BURTON TRUST	Y
	532687	16.0	N	4.0	E	15	SE	SE	SE	EXEMPT	WP	D	9/18/1991	62	6	6		60		X	FREY, KARL,	
	644593	16.0	N	4.0	E	15	SE	SE	SE	EXEMPT	WP	D	6/25/1966	125	34	8	30	30	0		MORRIS,C O	
	510621	16.0	N	4.0	E	15	SE	SE	SE	EXEMPT	WP	D									DURNEZ,R	Y
	532690	16.0	N	4.0	E	15	SE	SE	SE	EXEMPT	WP	D	9/16/1991	65	10	6	20	30		X	SELF, CLINTON,	
	557509	16.0	N	4.0	E	15	SE	SE	SE	EXEMPT	WP	D	5/17/1996	70	17	6	16	16		X	BLANKENSHIP, MICHAEL,	
	557330	16.0	N	4.0	E	19	SW	NW	SE	EXEMPT	WP	D	5/3/1996	570	400	6	10	15		X	CHRISTOPHER,,A J	
128	620883	16.0	N	4.0	E	20	NW	NW	NW	NON-EXEMPT	WP	IRR,S	10/1/1959	1485		16					MORRISON, KENNETH,C	
	614259	16.0	N	4.0	E	20	NW	NW	NW	EXEMPT	WP	S		1485	181	16	5				AZ STATE LAND DEPT,	
129	643702	16.0	N	4.0	E	21	NE			NON-EXEMPT	WP	IRR,D	12/28/1963	392	12	10	300	300	0		SPRING CREEKLAND COMPANY	
130	643704	16.0	N	4.0	E	21	NE			NON-EXEMPT	WP	IRR,D	2/14/1979	204	45	6	30	30	0		SPRING CREEKLAND COMPANY	
	643705	16.0	N	4.0	E	21	NE			EXEMPT	WP	D	2/14/1979	187	60	6	30	30	0		SPRING CREEKLAND COMPANY	
	645356	16.0	N	4.0	E	22	SE	SW		EXEMPT	WP	D,S	1/1/1965	60	20	6	10	10	0		JOHNSON,P E	
	533277	16.0	N	4.0	E	23				EXPL	GEOTECH	NONE	10/30/1991	13	8					X	AZ GAME & FISH DEPT,	Y
	086518	16.0	N	4.0	E	23	NE	NE	SE	NON-EXEMPT	WP	IRR,D,S									GROVES,JACK,E	Y
	501695	16.0	N	4.0	E	23	NE	NE	SE	NON-EXEMPT	WP	IRR									GROVES, JACK,E	Y
	507268	16.0	N	4.0	E	23	NE	NE	SE	NON-EXEMPT	WP	IRR,D,S									GROVES, JACK,E	Y
	513067	16.0	N	4.0	E	23	NE	NE	SE	NON-EXEMPT	WP	IRR,D,S									GROVES, JACK,	Y
	516418	16.0	N	4.0	E	23	NE	NE	SE	NON-EXEMPT	WP	IRR,D,S									GROVES, JACK,	Y
	519920	16.0	N	4.0	E	23	NE	NE	SE	NON-EXEMPT	WP	IRR,D,S									GROVES, JACK,	Y
	523156	16.0	N	4.0	E	23	NE	NE	SE	NON-EXEMPT	WP	IRR,D,S									GROVES, JACK,	Y
	527021	16.0	N	4.0	E	23	NE	NE	SE	NON-EXEMPT	WP	IRR,D,S									GROVES, JACK,	Y
	530562	16.0	N	4.0	E	23	NE	NE	SE	NON-EXEMPT	WP	IRR,D,S									GROVES, JACK,	Y
	534007	16.0	N	4.0	E	23	NE	NE	SE	NON-EXEMPT	WP	IRR,D,S									GROVES, JACK,	Y
	542024	16.0	N	4.0	E	23	NE	NE	SE	NON-EXEMPT	WP	D,IRR,S									GROVES, JACK,	Y
	547986	16.0	N	4.0	E	23	NE	NE	SE	NON-EXEMPT	WP	D,S,IRR									GROVES, JACK,	Y
	504544	16.0	N	4.0	E	23	NE	NE	SE	NON-EXEMPT	WP	D,S									GROVES, JACK,E	Y
	510248	16.0	N	4.0	E	23	NE	NE	SE	NON-EXEMPT	WP	IRR,D,S									GROVES, JACK,E	Y
	537754	16.0	N	4.0	E	23	NE	NE	SE	NON-EXEMPT	WP	IRR,D									GROVES, JACK,	Y
	616732	16.0	N	4.0	E	23	NE	NW	NE	EXEMPT	WP	D	5/1/1957	50	25	6	10	10	0		PAGE,J E	
	587189	16.0	N	4.0	E	23	NE	NW	NE	NON-EXEMPT	WP	IRR									GROVES	Y
131	616730	16.0	N	4.0	E	23	NE	NW	SE	NON-EXEMPT	WP	D,IRR	6/1/1962	208		6	260	260	0		AMERICA THE BEAUTIF,J E	

Source: ADWR 55- Well Registry, 2005

APPENDIX A
ADWR WELL INVENTORY

Map ID	ADWR Reg.	T		R		Sect	Acre160	Acre 40	Acre 10	Well Type	Well Use	Water Use	Date	Depth	WL	Width	Pump Rate	Test Rate	DD	Drill Log	Owner	Cancel
	587188	16.0	N	4.0	E	23	NE	SW	NE	NON-EXEMPT	WP	IRR									GROVES	Y
	608328	16.0	N	4.0	E	23	NE	SW	NW	EXEMPT	WP	D,S	1/1/1973	85	37	8					RED RIVER CATTLE LIMITED	
132	575105	16.0	N	4.0	E	23	NE	SE	SW	NON-EXEMPT	WP	D	8/12/1999	208		10				X	B CROSS RANCH LLC, A DELA	
	612057	16.0	N	4.0	E	23	NW			EXEMPT	WP	D		30	8	6					BEEBE,J D	
	624961	16.0	N	4.0	E	23	NW			EXEMPT	WP	D	2/23/1980	103	12	6	18	18	0		MACEY,G D	
133	612056	16.0	N	4.0	E	23	NW			NON-EXEMPT	WP	D		285	20	6	30	30	0		BEEBE,J D	
	086517	16.0	N	4.0	E	23	NW	NE	NE	NON-EXEMPT	WP	D,S									GROVES, JACK,E	Y
	501696	16.0	N	4.0	E	23	NW	NE	NE	NON-EXEMPT	WP	IRR									GROVES, JACK,E	Y
	504546	16.0	N	4.0	E	23	NW	NE	NE	NON-EXEMPT	WP	D,S									GROVES, JACK,E	Y
	507269	16.0	N	4.0	E	23	NW	NE	NE	NON-EXEMPT	WP	IRR,D,S									GROVES,J	Y
	510247	16.0	N	4.0	E	23	NW	NE	NE	NON-EXEMPT	WP	IRR,D,S									GROVES, JACK,E	Y
	513068	16.0	N	4.0	E	23	NW	NE	NE	NON-EXEMPT	WP	IRR,D,S									GROVES, JACK,	Y
	516415	16.0	N	4.0	E	23	NW	NE	NE	NON-EXEMPT	WP	IRR,D,S									GROVES, JACK,	Y
	519918	16.0	N	4.0	E	23	NW	NE	NE	NON-EXEMPT	WP	IRR,D,S									GROVES, JACK,	Y
	523157	16.0	N	4.0	E	23	NW	NE	NE	NON-EXEMPT	WP	IRR,D,S									GROVES, JACK,	Y
	527031	16.0	N	4.0	E	23	NW	NE	NE	NON-EXEMPT	WP	IRR,D,S									GROVES, JACK,	Y
	530560	16.0	N	4.0	E	23	NW	NE	NE	NON-EXEMPT	WP	IRR,D,S									GROVES, JACK,	Y
	537753	16.0	N	4.0	E	23	NW	NE	NE	NON-EXEMPT	WP	IRR,D									GROVES, JACK,	Y
	542026	16.0	N	4.0	E	23	NW	NE	NE	NON-EXEMPT	WP	IRR,D,S									GROVES, JACK,	Y
	547987	16.0	N	4.0	E	23	NW	NE	NE	NON-EXEMPT	WP	D,S,IRR									GROVES, JACK,	Y
	553258	16.0	N	4.0	E	23	NW	NE	NE	NON-EXEMPT	WP	IRR,D,S									DAVENPORT MEM PARK,	Y
	534008	16.0	N	4.0	E	23	NW	NE	NE	NON-EXEMPT	WP	IRR,D,S									GROVES, JACK,	Y
	571155	16.0	N	4.0	E	23	NW	NE	NE	NON-EXEMPT	WP	IRR									GROVES	Y
	616731	16.0	N	4.0	E	23	NW	NE	NW	EXEMPT	WP	D,S	5/27/1971	278	33	6	30	30	0		PAGE,J E	
	571156	16.0	N	4.0	E	23	NW	NE	SE	NON-EXEMPT											GROVES	Y
134	624680	16.0	N	4.0	E	23	NW	NW		NON-EXEMPT	WP	IRR,D	9/1/1959	90		8	70	70	0		JAICHIMA, NORMA,	
	506163	16.0	N	4.0	E	23	NW	NW	NW	EXEMPT	WP	D	10/23/1983	150	80	6	12	121	0	X	MOODY,W	
	512576	16.0	N	4.0	E	23	NW	NW	NW	EXEMPT	WP	D	10/26/1985	180		6	1190			X	GREEN	
	599290	16.0	N	4.0	E	23	NW	NW	NW	EXEMPT	WP	D									GREEN	Y
	204294	16.0	N	4.0	E	23	NW	NW	NW	EXEMPT	WP	D									GREEN	
135	611147	16.0	N	4.0	E	23	NW	NW	SW	NON-EXEMPT	WP	D	1/1/1973	247	45	9					PUEBLO HILLS H GROUP,	
	807078	16.0	N	4.0	E	23	NW	SW	SE	EXEMPT	WP	D	4/26/1980	211		8	32				WELSH	
136	556392	16.0	N	4.0	E	23	NW	SE	NE	NON-EXEMPT	WP	D,IRR,S	3/28/1997	210	1	12		1300		X	RED RIVER CATTLE LIMITED	
	588615	16.0	N	4.0	E	23	NW	SE	NE	EXEMPT	WP	D									BRYSON	Y
	506318	16.0	N	4.0	E	23	NW	SE	SW	EXEMPT	WP	D	9/1/1983	290	60	5	20	20	0	X	FISHER, NINA,J	
	571154	16.0	N	4.0	E	23	NW	SE	SE	NON-EXEMPT											GROVES	Y
	588616	16.0	N	4.0	E	23	NW	SE	SE	EXEMPT	WP	D	1/31/2002	215		6				X	BRYSON	
	533273	16.0	N	4.0	E	23	SW	NE	NE	EXPL	PIEZ	T	11/1/1991	14	9	2				X	AZ GAME & FISH DEPT,	
137	600738	16.0	N	4.0	E	23	SW	NE	SW	NON-EXEMPT	WP	D,IRR,S					30	30	0	N	CAVE, BRUCE,W	
	631432	16.0	N	4.0	E	23	SW	NE	SE	EXEMPT	WP	D		50	20	6	35	35	0		VAUGHN,W	
	533274	16.0	N	4.0	E	23	SW	NE	SE	MON/PIEZ	PIEZ	T	10/31/1991	16	4	2				X	AZ GAME & FISH DEPT,	
	547984	16.0	N	4.0	E	23	SW	SE	NE	NON-EXEMPT	WP	D,S,IRR									GROVES, JACK,	Y
	553256	16.0	N	4.0	E	23	SW	SE	NE	NON-EXEMPT	WP	D,IRR,S									DAVENPORT MEM PARK,	Y
	553257	16.0	N	4.0	E	23	SW	SE	NE	NON-EXEMPT	WP	IRR,D,S									DAVENPORT MEM PARK,	Y
	553259	16.0	N	4.0	E	23	SW	SE	NE	NON-EXEMPT	WP	IRR,D,S									DAVENPORT MEM PARK,	Y
138	600484	16.0	N	4.0	E	23	SW	SE	NW	NON-EXEMPT	WP	D,IRR	1/15/1980	208		8	343			N	CAVE, BRUCE,W	
	591579	16.0	N	4.0	E	23	SW	SE	SW	EXEMPT	WP	D	5/30/2002	174	54	6	25	25		X	JANICE K LUCKY TANNER FAM	
	651209	16.0	N	4.0	E	23	SE	NE		EXEMPT	WP	IRR,S,D	1/1/1971	50		4	10	10	0		NAWROCKI, LEONARD,	
	086846	16.0	N	4.0	E	23	SE	NE	NE	NON-EXEMPT	WP	D									GROVES, JACK,E	Y
	501697	16.0	N	4.0	E	23	SE	NE	NE	NON-EXEMPT	WP	D									GROVES, JACK,E	Y
	504548	16.0	N	4.0	E	23	SE	NE	NE	NON-EXEMPT	WP	D									GROVES, JACK,E	Y
	507271	16.0	N	4.0	E	23	SE	NE	NE	NON-EXEMPT	WP	D									GROVES, JACK,E	Y
	510246	16.0	N	4.0	E	23	SE	NE	NE	NON-EXEMPT	WP	D									GROVES, JACK,E	Y
	513066	16.0	N	4.0	E	23	SE	NE	NE	NON-EXEMPT	WP	D									GROVES, JACK,	Y
	517021	16.0	N	4.0	E	23	SE	NE	NE	NON-EXEMPT	WP	D									GROVES, JACK,	Y

Source: ADWR 55- Well Registry, 2005

APPENDIX A
ADWR WELL INVENTORY

Map ID	ADWR Reg.	T		R		Sect	Acre160	Acre 40	Acre 10	Well Type	Well Use	Water Use	Date	Depth	WL	Width	Pump Rate	Test Rate	DD	Drill Log	Owner	Cancel
	521432	16.0	N	4.0	E	23	SE	NE	NE	NON-EXEMPT	WP	D									GROVES, JACK,	Y
	524608	16.0	N	4.0	E	23	SE	NE	NE	NON-EXEMPT	WP	D									GROVES, JACK,	Y
	528068	16.0	N	4.0	E	23	SE	NE	NE	NON-EXEMPT	WP	IRR,S									GROVES, JACK,	Y
	534154	16.0	N	4.0	E	23	SE	NE	NE	NON-EXEMPT	WP	D,IRR,S									GROVES, JACK,	Y
	537756	16.0	N	4.0	E	23	SE	NE	NE	NON-EXEMPT	WP	IRR,D									GROVES, JACK,	Y
	547985	16.0	N	4.0	E	23	SE	NE	NE	NON-EXEMPT	WP	D,IRR,S									GROVES, JACK,	Y
	542025	16.0	N	4.0	E	23	SE	NE	NE	NON-EXEMPT	WP	D,IRR,S									GROVES, JACK,	Y
	596583	16.0	N	4.0	E	23	SE	NE	NW	NON-EXEMPT	WP	IRR,COM,D									GROVES	Y
139	201644	16.0	N	4.0	E	23	SE	NE	NW	NON-EXEMPT	WP	COM		337	98	10				X	GROVES	
	628230	16.0	N	4.0	E	23	SE	NW		EXEMPT	WP	D	7/1/1960	80	45	6	10	10	0		AZ GAME & FISH DEPT,	Y
	086879	16.0	N	4.0	E	23	SE	NW	NW	EXEMPT	WP	D	1/1/1981	300		6		20			AZ GAME & FISH DEPT,	
	533275	16.0	N	4.0	E	23	SE	NW	NW	MON/PIEZ	PIEZ	T	11/1/1991	16	14	2				X	AZ GAME & FISH DEPT,	
	533276	16.0	N	4.0	E	23	SE	NW	SW	MON/PIEZ	PIEZ	T	10/31/1991	16	6	2				X	AZ GAME & FISH DEPT,	
	602065	16.0	N	4.0	E	23	SE	SW	NW	EXEMPT	WP	D	6/25/1979	500	170	6	15				BERGQUIST	
	599465	16.0	N	4.0	E	23	SE	SE	NW	EXEMPT	WP	D	9/22/2003	300		6	20	20	0	X	AZ GAME & FISH,	
	632415	16.0	N	4.0	E	25	NW	SW		EXEMPT	WP	D	1/1/1949	60	20	6	30	30	0		ROBINSON,W C	
	632270	16.0	N	4.0	E	25	NW	SW	NW	EXEMPT	WP	D	11/1/1976	505	420	8	20	20	0		ENRIQUEZ	
	535393	16.0	N	4.0	E	25	NW	SW	SW	EXEMPT	WP	D	6/7/1992	400	200	8	12	10		X	CONRAD, PERRY,	
	543554	16.0	N	4.0	E	25	NW	SW	SE	EXEMPT	WP	D	6/16/1994	500	190	7	12	15		X	BRADSHAW,,C L	
	648590	16.0	N	4.0	E	25	SW	NW		EXEMPT	WP	D	5/14/1962	50	35	6	10	10	0		ROBINSON,C	
	600630	16.0	N	4.0	E	25	SW	NW	NE	EXEMPT	WP	D	9/1/1967	302	202	8	15			N	RODGERS & HURLEYS,	
	600634	16.0	N	4.0	E	25	SW	NW	SE	EXEMPT	WP	D	12/29/1970	362	292	6	15			N	RODGERS & HURLEYS,	
	802523	16.0	N	4.0	E	25	SW	SW	NW	EXEMPT	WP	D									FREY, HENRY,L	
	534460	16.0	N	4.0	E	25	SW	SW	NW	EXEMPT	WP	D	4/10/1992	297	30	6	20	20		X	SHANKS, GERALD,	
	597369	16.0	N	4.0	E	25	SW	SW	SW	EXEMPT	WP	D,S	5/21/2003	400	215	7		10		X	GRANNAN	
	603319	16.0	N	4.0	E	25	SW	SW	SE	EXEMPT	WP	D	3/20/1976	276	256	6	15				SEPULVEDA,A	
	630235	16.0	N	4.0	E	26	NE			EXEMPT	WP	D	10/13/1970	95	1	8	30	30	0		JEKEL,M R	
	593919	16.0	N	4.0	E	26	NE	NE	NE	NON-EXEMPT	WP	D									SNAPP	Y
140	592693	16.0	N	4.0	E	26	NE	NE	NE	NON-EXEMPT	WP	D					150	150			PEARCE	
	568526	16.0	N	4.0	E	26	NE	NE	SE	EXEMPT	WP	D	9/18/1998	200	88	6	15	15		X	MOHL	
	540839	16.0	N	4.0	E	26	NE	NE	SE	EXEMPT	WP	D	11/10/1994	250	60	6				X	GOTTSCHALK, RICHARD,	
	585645	16.0	N	4.0	E	26	NE	SW	SE	EXEMPT	WP	D	3/10/2001	250	20	6				X	REEVE	
	630160	16.0	N	4.0	E	26	NE	SE		EXEMPT	WP	D	10/17/1967	95	25	8	20	20	0		WASBOTTEN,L B	
	532776	16.0	N	4.0	E	26	NE	SE	NE	EXEMPT	WP	D	12/20/1991	362	212	8	20	20		X	GOLD	
141	620702	16.0	N	4.0	E	26	NE	SE	SW	NON-EXEMPT	WP	IRR,D				8					REEVE, GEORGE,W	
	630683	16.0	N	4.0	E	26	NE	SE	SE	EXEMPT	WP	D,IRR	10/15/1970	224	25	6	30	30	0		BROWN,J A	
	648787	16.0	N	4.0	E	26	NE	SE	SE	EXEMPT	WP	D		150	60	4	15	15	0		LOSHONKOHL, KENNETH,	
	598044	16.0	N	4.0	E	26	NE	SE	SE	EXEMPT	WP	D		400	20	5				X	WASBOTTEN	
142	501424	16.0	N	4.0	E	26	NW	NE	NE	NON-EXEMPT	WP	IRR	10/11/1982	827	2	12	252	252	0	X	GLOMSKI/KEENAN	
	641326	16.0	N	4.0	E	26	NW	NW	SE	EXEMPT	WP	D	6/1/1978	120	22	6	15	15	0		GLOMSKI	
	506931	16.0	N	4.0	E	26	NW	SE	NW	EXEMPT	WP	D	1/10/1984	100	51	6	20	20	0	X	MOUNT,R J	
	564998	16.0	N	4.0	E	26	SW	NE	SW	EXEMPT	WP	D		195	18	6				X	NORTHERN ARIZONA LLC	
	641049	16.0	N	4.0	E	26	SE	NE		EXEMPT	WP	D,IRR	1/1/1940		20	6	35	35	0		FRANK, RAYMOND,G	
	802376	16.0	N	4.0	E	26	SE	NE		EXEMPT	WP	D									GRODZINSKY	
	523334	16.0	N	4.0	E	26	SE	NE	NE	EXEMPT	WP	D	3/6/1989	100	15	6				X	NAWROCKI, LEONARD,	
	597625	16.0	N	4.0	E	26	SE	NE	NE	EXEMPT	WP	D,S		340	25	7				X	LIVANAVAGE	
	648703	16.0	N	4.0	E	26	SE	NE	NE	EXEMPT	WP	D	1/1/1974	150			20	20	0		WAGNER,E W	
	507216	16.0	N	4.0	E	26	SE	NE	NE	EXEMPT	WP	D	2/28/1984	239	30	7	10	10		X	HURLEY,C L	
	503127	16.0	N	4.0	E	26	SE	NE	NW	NON-EXEMPT	WP	IRR,D									HARDWICK & HARDWICK,	Y
	503653	16.0	N	4.0	E	26	SE	NE	NW	EXEMPT	WP	D,IRR	10/5/1982	38	10	8	30	30	0	X	SECHRIST	
	517383	16.0	N	4.0	E	26	SE	NE	NW	EXEMPT	WP	D	4/15/1987	350	20	6				X	NAWROCKI, LEONARD,	
	523047	16.0	N	4.0	E	26	SE	NE	NW	EXEMPT	WP	D									NAWROCKI, LEONARD,	Y
	513664	16.0	N	4.0	E	26	SE	NE	NW	EXEMPT	WP	D	3/12/1986	275	30	6				X	NAWROCKI, LEONARD,	
	527473	16.0	N	4.0	E	26	SE	NE	NW	EXEMPT	WP	D	3/24/1990	245	18	8	25	25		X	SECHRIST, CHARLES,	
	900372	16.0	N	4.0	E	26	SE	NE	NW	EXEMPT		COM									PAGE SPRINGS VINEYARD	

Source: ADWR 55- Well Registry, 2005

APPENDIX A
ADWR WELL INVENTORY

Map ID	ADWR Reg.	T		R		Sect	Acre160	Acre 40	Acre 10	Well Type	Well Use	Water Use	Date	Depth	WL	Width	Pump Rate	Test Rate	DD	Drill Log	Owner	Cancel
	527356	16.0	N	4.0	E	26	SE	NE	SW	EXEMPT	WP	D	3/21/1990	300		8	25	25		X	GRODZINSKY	
	901011	16.0	N	4.0	E	26	SE	NE	SW	EXEMPT		D		200	40	6				X	FRANK	
	802936	16.0	N	4.0	E	26	SE	NW		EXEMPT	WP	D	1/1/1973								MORRISON AND SARA KERN	
	646169	16.0	N	4.0	E	26	SE	NW	NE	EXEMPT	WP	D		180							OAK CREEK RANCH SCH,	
	646170	16.0	N	4.0	E	26	SE	NW	NE	EXEMPT				180							OAK CREEK RANCH SCH,	
	645959	16.0	N	4.0	E	26	SE	NW	NW	EXEMPT	WP	D	5/1/1978	228	30	6	20	20	0		MELTON,C	
	511136	16.0	N	4.0	E	26	SE	NW	NW	EXEMPT	WP	D	6/21/1985	284	96	8	15	15		X	DEPASQUALE	
	518081	16.0	N	4.0	E	26	SE	NW	NW	EXEMPT	WP	D	6/15/1987	215	160	6				X	HAGER, SUSAN,	
	501361	16.0	N	4.0	E	26	SE	NW	SW	EXEMPT	WP	D	10/1/1981	210	10	6		35	0	X	TROXELL,W H	
	503832	16.0	N	4.0	E	26	SE	NW	SW	EXEMPT	WP	D	10/1/1981	37	10	6	20	20		X	DENNIS	
	590785	16.0	N	4.0	E	26	SE	NW	SW	EXEMPT	WP	D	2/23/2002	400	106	8	30	30		X	MORRISON	
	808519	16.0	N	4.0	E	26	SE	NW	SW	EXEMPT	WP	D	1/1/1904	22							TROXELL FAMILY TRUST	
	802649	16.0	N	4.0	E	26	SE	NW	SE	EXEMPT	WP	IRR,D		160		6	10				OAK CREEK RANCH SCH,	
	802650	16.0	N	4.0	E	26	SE	NW	SE	EXEMPT	WP	D,IRR		163	80	6	15	15	0		OAK CREEK RANCH SCH,	
	802651	16.0	N	4.0	E	26	SE	NW	SE	EXEMPT	WP	D,IRR		160	80	6	10	10	0		OAK CREEK RANCH SCH,	
	802652	16.0	N	4.0	E	26	SE	NW	SE	EXEMPT	WP	D		125	50	6	10	10	0		OAK CREEK RANCH SCH,	
143	571241	16.0	N	4.0	E	26	SE	SW	NW	NON-EXEMPT	WP	IRR		744		16				X	FLETCHER	
	644061	16.0	N	4.0	E	26	SE	SW	SW	EXEMPT	WP	D,IRR				5					SCHIFFNER, CHARLES,	
	644062	16.0	N	4.0	E	26	SE	SW	SW	EXEMPT	WP	D,IRR				5					SCHIFFNER, CHARLES,	
	599474	16.0	N	4.0	E	26	SE	SW	SW	EXEMPT	WP	D									JOHNSON	Y
	590343	16.0	N	4.0	E	26	SE	SW	SE	EXEMPT	WP	D	2/12/2002	220	8	8				X	JOEL HENRY LLC	
	645230	16.0	N	4.0	E	26	SE	SE		EXEMPT	WP	S,D	9/1/1973	300	60		5	5	0		FLICK,W A	
	630501	16.0	N	4.0	E	26	SE	SE	NW	EXEMPT	WP	D	12/6/1979	468	90	6	2	2	0		KNIPSCHILD,D	
	594964	16.0	N	4.0	E	26	SE	SE	NW	EXEMPT	WP	D									NORTHERN ARIZONA LLC	Y
	565262	16.0	N	4.0	E	26	SE	SE	SE	EXEMPT	WP	D									FLICK	Y
	575107	16.0	N	4.0	E	26	SE	SE	SE	EXEMPT	WP	D	10/19/1998	700	180	6				X	FLICK	N
	587215	16.0	N	4.0	E	27	NW	NE	NE	MONITOR	MON	T									HASKELL	Y
	587216	16.0	N	4.0	E	27	NW	NE	NE	MONITOR	MON	T	7/25/2001	30	43	2				X	HASKELL	N
	607469	16.0	N	4.0	E	27	NW	NE	NW	EXEMPT	WP	D									SPRING HILL RANCH LLC	
	801729	16.0	N	4.0	E	27	NW	NW		EXEMPT	WP	D				10					SPRING HILL RANCH LLC	
144	802600	16.0	N	4.0	E	27	NW	NW	NE	NON-EXEMPT	WP	D,IRR	2/15/1979	142	60	6	40				WADDELL,J H	
145	618363	16.0	N	4.0	E	27	SE	SW	SW	NON-EXEMPT	WP	D	10/1/1971	390	26	6	50	50	0		OAK CREEK VALLEY,	
	802370	16.0	N	4.0	E	27	SE	SW	SE	EXEMPT	WP	D	11/21/1973	390	100	10	18	18	0		OAK CREEK VALLEY,	
146	901399	16.0	N	4.0	E	31	NW	NE	NE	NON-EXEMPT		COM									BR CONSULTING , INC	
147	901400	16.0	N	4.0	E	31	NW	NE	NE	NON-EXEMPT		COM		650	87	10				X	BR CONSULTING, INC	
148	201184	16.0	N	4.0	E	31	NW	NE	NE	NON-EXEMPT	WP	COM		530	40	11				X	GM FRATELLI LLC	
	577585	16.0	N	4.0	E	31	NW	NW	NW	EXEMPT	WP	D	1/21/2000	400	80	10				X	ROMAN CATHIC CHURCH DIOCE	
	503429	16.0	N	4.0	E	33	NE	NE	NE	NON-EXEMPT	WP	D									MURETIC,J	Y
	902071	16.0	N	4.0	E	33	NE	NE	NE	EXEMPT		D		250	118	6				X	JALAN CONSTRUCTION, LLC	
	571528	16.0	N	4.0	E	33	NE	NE	NE	EXEMPT	WP	D	3/8/1999	220	130	6	15	15		X	BAIDINGER	
	586268	16.0	N	4.0	E	33	NE	NE	NE	EXEMPT	WP	D	5/1/2001	550		6				X	SARAVO	
	620882	16.0	N	4.0	E	33	NE	NE	NW	EXEMPT	WP	D,S,IRR		200	130	8	15				MILLER BROS LLC	
	901980	16.0	N	4.0	E	33	NE	NE	SE	EXEMPT		D		660	244					X	DOOD	
	902032	16.0	N	4.0	E	33	NE	SE	NE	EXEMPT		D									RUSH, JR	
149	620881	16.0	N	4.0	E	33	NE	SE	NW	NON-EXEMPT	WP	IRR,S		210	140	8	25				PARKER & GELLEIN	
	597581	16.0	N	4.0	E	33	NE	SE	SW	EXEMPT	WP	D,S	7/8/2003	295	164	7	20	20		X	STEARLEY	
	541257	16.0	N	4.0	E	33	NE	SE	SE	EXEMPT	WP	D	3/18/1994	325	83	6	25	28	0	X	SAVAGE	
	202596	16.0	N	4.0	E	33	SE	SE	NE	EXEMPT	WP	D	9/8/2004	150	95	6				X	BRADY	
	536081	16.0	N	4.0	E	33	SE	SE	NW	EXEMPT	WP	D									TONSICH, TONY,	Y
	536082	16.0	N	4.0	E	33	SE	SE	NW	EXEMPT	WP	D									TONSICH, TONY,	Y
	551545	16.0	N	4.0	E	33	SE	SE	NW	EXEMPT	WP	D	9/30/1995	195	90	6				X	HOFFMAN	
	532972	16.0	N	4.0	E	33	SE	SE	SE	EXEMPT	WP		9/12/1991	141	23	6	34	34	0	X	MULCAIRE, TOM,	
	630816	16.0	N	4.0	E	34				EXEMPT	WP	D									CARROLL,E	
	644399	16.0	N	4.0	E	34				EXEMPT	WP	D	1/1/1966	100	40	6	4	4	0		PIRTLE,D	
	644503	16.0	N	4.0	E	34				EXEMPT	WP	UTIL		165			10	10	0		LITTLE, O WAYNE,	

Source: ADWR 55- Well Registry, 2005

APPENDIX A
ADWR WELL INVENTORY

Map ID	ADWR Reg.	T		R		Sect	Acre160	Acre 40	Acre 10	Well Type	Well Use	Water Use	Date	Depth	WL	Width	Pump Rate	Test Rate	DD	Drill Log	Owner	Cancel
	648107	16.0	N	4.0	E	34				EXEMPT	WP	D									MORRISON, RAY,	
	649250	16.0	N	4.0	E	34				EXEMPT	WP	D,S	1/1/1978	140	30	8	34	34	0		WYLES,D	
	649739	16.0	N	4.0	E	34				EXEMPT	WP	D									ERICKSON, DOROTHY,L	
	645566	16.0	N	4.0	E	34				EXEMPT	WP	D	4/1/1966	100	30	6	4	4	0		PENNINGTON,H J	
	630818	16.0	N	4.0	E	34				EXEMPT	WP	D	1/1/1963								MORRISON, RAY &,	
	629570	16.0	N	4.0	E	34				EXEMPT	WP	D	6/1/1975	125	30	6	15	15	0		SUTTON,W G	
	576412	16.0	N	4.0	E	34				EXEMPT											BEJARANO	
	802753	16.0	N	4.0	E	34	NE			EXEMPT	WP	D	1/1/1950	140	33	6	18	18	0		RONAN,R M	
	808390	16.0	N	4.0	E	34	NE	NE	NE	EXEMPT	WP	D	1/1/1960	60	20	8					WELLS FARGO BANK AS TRUST	
	643297	16.0	N	4.0	E	34	NE	NW		EXEMPT	WP	D									ORTH, F STEPHEN,	
150	802369	16.0	N	4.0	E	34	NE	NW	NW	NON-EXEMPT	WP	D	4/26/1977	690		10	50	50	0		OAK CREEK VALLEY,	
151	205573	16.0	N	4.0	E	34	NE	NW	NW	NON-EXEMPT	WP	MUN	4/5/2005	660	10	10				X	OAK CREEK VALLEY PROPERTY	
	585169	16.0	N	4.0	E	34	NE	NW	NW	MONITOR	MON	T	3/30/2001	40	24	4				X	OAK CREEK VALLEY PROPERTY	
	643911	16.0	N	4.0	E	34	NE	SW		EXEMPT	WP	D		160	60	6	15	15	0		LIPE,J V	
	644664	16.0	N	4.0	E	34	NE	SW		EXEMPT	WP	D	8/1/1970	185	40	6	30	30	0		GREER, ROBERT,H	
	647273	16.0	N	4.0	E	34	NE	SW		EXEMPT	WP	D,IRR	3/2/1972	230	60	6	20	20	0		ANDREWS,J C	
	651036	16.0	N	4.0	E	34	NE	SW		EXEMPT	WP	D		140	65	6					VANN LIPE,J	
	651037	16.0	N	4.0	E	34	NE	SW		EXEMPT	WP	D		80	60	6					VANN LIPE,J	
	511120	16.0	N	4.0	E	34	NE	SW	NW	EXEMPT	WP	D	6/3/1985	100	25	6	10	10	0	X	MCCROSSEN, RUSSELL,J	
	531932	16.0	N	4.0	E	34	NE	SW	NW	EXEMPT	WP	D	6/14/1991	115	45	6	20	20	0	X	WEST, KENNETH,D	
	637685	16.0	N	4.0	E	34	NE	SW	NW	EXEMPT	WP	D,S	11/16/1977	152	27	6	10	10	0		STONE,J R	
	800508	16.0	N	4.0	E	34	NE	SW	NW	EXEMPT	WP	D	7/29/1969	270	80	6	20	20	0		MACHESNEY	
	566653	16.0	N	4.0	E	34	NE	SW	NW	EXEMPT	WP	D	3/10/1998	120	29	6	10	10	0	X	ROBERTSON	
	633314	16.0	N	4.0	E	34	NE	SW	SW	EXEMPT	WP	D		180		6					INGALLINA,M	
	592886	16.0	N	4.0	E	34	NE	SW	SE	EXEMPT	WP	D	8/16/2002	195		6	10	10		X	VAATZ	
	642200	16.0	N	4.0	E	34	NE	SE	NW	EXEMPT	WP	D	1/16/1979	135	27	6	15	15	0		ROBERTSON JR,B J	
	549007	16.0	N	4.0	E	34	NE	SE	SE	EXEMPT	WP	D	5/5/1995	178		8	30	30		X	WELLS FARGO BANK UTAH N.A	
	802658	16.0	N	4.0	E	34	NW	NE		EXEMPT	WP	D									EATON,S	
	802365	16.0	N	4.0	E	34	NW	NE		EXEMPT	WP	D,S	1/1/1978	220	35	6	10	10	0		BOSSE	
	802364	16.0	N	4.0	E	34	NW	NE		EXEMPT	WP	D,S	1/1/1960	300	20	8	16	25	0		SORRENTINO	
	646518	16.0	N	4.0	E	34	NW	NE	NE	EXEMPT	WP	D	7/5/1979	220	90	6					GRAY & BAKER	
	649879	16.0	N	4.0	E	34	NW	NE	SW	EXEMPT	WP	D									WINEBARGER,E C	
	591263	16.0	N	4.0	E	34	NW	NE	SW	EXEMPT	WP	D		171	30	7				X	WRIGHT	
	620889	16.0	N	4.0	E	34	NW	NW		EXEMPT	WP	D		75							MILLER BROTHERS,	
	806755	16.0	N	4.0	E	34	NW	NW		EXEMPT	WP	D	8/1/1973	519		6					NYLANDER, EDWARD,	
	624529	16.0	N	4.0	E	34	NW	NW		EXEMPT	WP	D	1/1/1973	600	80	8	20				NACKARD, K JOSEPH,	
	529155	16.0	N	4.0	E	34	NW	NW	NE	EXEMPT	WP	D	8/19/1990	80	50	6				X	GRAVES	
	647928	16.0	N	4.0	E	34	NW	NW	NE	EXEMPT	WP	D	8/25/1978	75	32	6	5	5	0		BIGELOW, CHARLES,R	
	503843	16.0	N	4.0	E	34	NW	NW	NE	EXEMPT	WP	D	9/18/1982	461	77	6	42		35	X	BIGELOW, CHARLES,R	
152	618364	16.0	N	4.0	E	34	NW	NW	NE	NON-EXEMPT	WP	D	3/15/1979	675		8	475	475	0		OAK CREEK VALLEY,	
	517008	16.0	N	4.0	E	34	NW	NW	NW	EXEMPT	WP	D	4/5/1987	228	198	6	15	5		X	BLAKELY, SHIRLEY,	
	601639	16.0	N	4.0	E	34	NW	NW	NW	EXEMPT	WP	D	6/5/1980	160	65	6	11				WRIGHT	
	086133	16.0	N	4.0	E	34	NW	NW	NW	EXEMPT	WP	D	1/1/1981	161		6		12			MANIERRE,B	
	597732	16.0	N	4.0	E	34	NW	NW	NW	EXEMPT	WP	D,S									COLLINS	Y
	599903	16.0	N	4.0	E	34	NW	NW	NW	EXEMPT	WP	D	10/3/2003	500	350	9	20	20		X	COLLINS	
	633851	16.0	N	4.0	E	34	NW	NW	SW	EXEMPT	WP	D	12/30/1955	75	30	6	50				JOHNSON	
	537135	16.0	N	4.0	E	34	NW	NW	SE	EXEMPT	WP	D	12/24/1992	200	50	6	20	20	0	X	GRAVES	
	602059	16.0	N	4.0	E	34	NW	NW	SE	EXEMPT	WP	D	8/7/1972	100	23	6	19				OLSON,A W	
	087712	16.0	N	4.0	E	34	NW	SW	NE	NON-EXEMPT	WP	IRR		450							KIMMELL,W L	Y
	503118	16.0	N	4.0	E	34	NW	SW	NE	NON-EXEMPT	WP	IRR									KIMMELL,W L	Y
	572434	16.0	N	4.0	E	34	NW	SW	NE	EXEMPT	WP	D	2/10/1999	140	40	6	16	16		X	CONNETT	
	596541	16.0	N	4.0	E	34	NW	SW	NW	EXEMPT	WP	D,S	2/11/2003	400	22	6				X	BEJARAMO	
	596838	16.0	N	4.0	E	34	NW	SW	SW	EXEMPT	WP	D	4/7/2003	206	20	7				X	SORRENTINO	
	550058	16.0	N	4.0	E	34	NW	SW	SE	EXEMPT	WP	D	6/16/1995	150	22	6				X	FOREST	
	632199	16.0	N	4.0	E	34	NW	SE		EXEMPT	WP	D		245							MONTGOMERY, JAMES,	

Source: ADWR 55- Well Registry, 2005

APPENDIX A
ADWR WELL INVENTORY

Map ID	ADWR Reg.	T		R		Sect	Acre160	Acre 40	Acre 10	Well Type	Well Use	Water Use	Date	Depth	WL	Width	Pump Rate	Test Rate	DD	Drill Log	Owner	Cancel
	632834	16.0	N	4.0	E	34	NW	SE		EXEMPT	WP	D,S	8/1/1979	186	12	6	15	15	0		SHEEHAN	
	637062	16.0	N	4.0	E	34	NW	SE		EXEMPT	WP	D	1/1/1971	115	80	6	6	6	0		TASH, MICHAEL,	
	645548	16.0	N	4.0	E	34	NW	SE		EXEMPT	WP	D	1/1/1967	250							WOODSON	
	649670	16.0	N	4.0	E	34	NW	SE		EXEMPT	WP	D			35	10					LYSONS,C E	
	631062	16.0	N	4.0	E	34	NW	SE		EXEMPT	WP	D		50	40	6	10				FREEMAN, DOUGLAS,A	
	508411	16.0	N	4.0	E	34	NW	SE	NE	EXEMPT	WP	D	6/29/1984	155	25	12	20	20		X	AGUILAR	
	641786	16.0	N	4.0	E	34	NW	SE	NE	EXEMPT	ABAN	D	10/7/1977	158	20	6	15	15	0		GUTIERREZ REVOCABLE FAMIL	Y
	643016	16.0	N	4.0	E	34	NW	SE	NE	EXEMPT	WP	D									GARCIA,J R	
	644120	16.0	N	4.0	E	34	NW	SE	NE	EXEMPT	WP	D	3/4/1975	300	25	6					FIGUEROA,N	
	646387	16.0	N	4.0	E	34	NW	SE	NW	EXEMPT	WP	D		160	30	6	15	15	0		DAVIS,D M	
	516269	16.0	N	4.0	E	34	NW	SE	NW	EXEMPT	WP	D	1/18/1987	148	22	6	20	10		X	MOODY	
	802569	16.0	N	4.0	E	34	NW	SE	NW	EXEMPT	WP	IRR,D									DAVIS ET AL,D M	
	556631	16.0	N	4.0	E	34	NW	SE	NW	EXEMPT	WP	D	11/18/1996	133	30	6				X	BATROFF	
	576782	16.0	N	4.0	E	34	NW	SE	NW	EXEMPT	WP	D	9/20/1999	145	55	6	16	16		X	GUTIERREZ REVOCABLE FAMIL	
	536345	16.0	N	4.0	E	34	NW	SE	SW	EXEMPT	WP	D	8/20/1992	124	27	6	12	12		X	DEGNER PAUL,M	
	565109	16.0	N	4.0	E	34	NW	SE	SW	EXEMPT	WP	D	11/19/1997	140	30	6	10	10		X	0	
	561689	16.0	N	4.0	E	34	NW	SE	SW	EXEMPT	WP	D	4/13/1997	165	51	6		10		X	FERRENDELL	
	517550	16.0	N	4.0	E	34	NW	SE	SE	EXEMPT	WP	D	4/19/1987	117		6				X	MONTGOMERY, JAMES,A	
	621695	16.0	N	4.0	E	34	NW	SE	SE	EXEMPT	WP	D	4/10/1967	225	30	6					FINLEY, RICHARD,	
	631809	16.0	N	4.0	E	34	NW	SE	SE	EXEMPT	WP	IRR,D	11/6/1968	230	170	8	6	6	0		FANCHER, LAUREN,M	
	648166	16.0	N	4.0	E	34	NW	SE	SE	EXEMPT	WP	D									STATTS, DONALD,	
	801831	16.0	N	4.0	E	34	NW	SE	SE	EXEMPT	WP	D	11/6/1968	230	25	8	6	6	0		WOMACK,W M	
	514751	16.0	N	4.0	E	34	NW	SE	SE	EXEMPT	WP	D	7/8/1986	120	120	6	20	15		X	VASQUEZ, DAVID,	
	900103	16.0	N	4.0	E	34	NW	SE	SE	EXEMPT		D		180	36	6				X	STAATS	
153	804015	16.0	N	4.0	E	34	SW			NON-EXEMPT	WP	D,IRR									BRAGGIOTTI, FRANK,M	
154	612649	16.0	N	4.0	E	34	SW	NE		NON-EXEMPT	WP	D,S	1/1/1961	200	50	6	60	60	0		PEN8, LLC,	
	643296	16.0	N	4.0	E	34	SW	NE		EXEMPT	WP	D									ORTH, F STEPHEN,	
	801694	16.0	N	4.0	E	34	SW	NE		EXEMPT	WP	IRR,S,D									MIRAVAL JR,G	
155	612650	16.0	N	4.0	E	34	SW	NE		NON-EXEMPT	WP	IRR,S	1/1/1961	200	50	8	150	150	0		PEN8, LLC,	
	531610	16.0	N	4.0	E	34	SW	NE	NE	EXEMPT	WP	D	5/3/1991	190	60	6	20	20		X	STOCKBRIDG,,T J	
	560967	16.0	N	4.0	E	34	SW	NE	NE	EXEMPT	WP	D	5/8/1997	182	60	6	10	10		X	PAYNE AND ROSS	
	577805	16.0	N	4.0	E	34	SW	NE	NE	EXEMPT	WP	D	12/10/1999	195	60	6	20	20		X	LITTLE	
	524974	16.0	N	4.0	E	34	SW	NE	SW	EXEMPT	WP	D	7/21/1989	178	14	6	20	20		X	KOCH	
	649673	16.0	N	4.0	E	34	SW	NW		EXEMPT	WP	D	2/1/1948	14	10	4	15	15	0		FRANKLIN EQUITY PARTNERS	
	503206	16.0	N	4.0	E	34	SW	NW	NE	EXEMPT	WP	D,S	11/27/1982	315	42	8				X	SLASON	
	503205	16.0	N	4.0	E	34	SW	NW	NW	EXEMPT	WP	D,S	12/16/1982	305	52	8				X	FRANKLIN EQUITY PARTNERS	
	901052	16.0	N	4.0	E	34	SW	NW	NW	EXEMPT		D		340	122	5				X	FRANKLIN EQUITY PARTNERS,	
	901053	16.0	N	4.0	E	34	SW	NW	NW	EXEMPT		D		337	120	6				X	FRANKLIN EQUITY PARTNERS,	
	901050	16.0	N	4.0	E	34	SW	NW	NW	EXEMPT		D									FRANKLIN EQUITY PARTNERS,	
	901051	16.0	N	4.0	E	34	SW	NW	NW	EXEMPT		D									FRANKLIN EQUITY PARTNERS,	
	901049	16.0	N	4.0	E	34	SW	NW	SW	EXEMPT		D		320	40	8				X	FRANKLIN EQUITY PARTNERS,	
	646950	16.0	N	4.0	E	34	SW	NW	SE	EXEMPT	WP	IRR,D	2/1/1971	86	40	6	12	12	0		KLEM,P V	
	508892	16.0	N	4.0	E	34	SW	SW	NE	EXEMPT	WP	D	11/19/1984	235	20	66	10	10		X	REEVE,G W	
	645941	16.0	N	4.0	E	34	SW	SW	NE	EXEMPT	WP	D	11/1/1946	102	20	6	35				SCHOLTZ, ROBERT,	
	629577	16.0	N	4.0	E	34	SW	SW	NW	EXEMPT	WP	D	1/1/1961	90	35	8	20	20	0		VANLANDINGHAM,J E	
	602173	16.0	N	4.0	E	34	SW	SW	SW	EXEMPT	WP	D	9/1/1973	122		6					HEXTER	
	548001	16.0	N	4.0	E	34	SW	SW	SE	EXEMPT	WP	D	9/8/1995	125	6	6				X	MANSHIP,,R J	
	632335	16.0	N	4.0	E	34	SW	SW	SE	EXEMPT	WP	D	10/2/1955	245	20	6	7				ROBERTS, ALFRED,J	
	551408	16.0	N	4.0	E	34	SW	SE	SE	EXEMPT	WP	D									MOYLE, JEFF,	Y
	630252	16.0	N	4.0	E	34	SE			EXEMPT	WP	D,S,IRR			12	6	35	35	0		ESTATES ON OAK CREEK II L	
	630800	16.0	N	4.0	E	34	SE	NW		EXEMPT	WP	D		249							HELFRICH	
	803099	16.0	N	4.0	E	34	SE	NW	NE	EXEMPT	WP	D	12/31/1973				35				SOUSA	
	644148	16.0	N	4.0	E	35				EXEMPT	WP	D	4/16/1965	275			12	12	0		FIRST INTERSTATE BK,	
	647742	16.0	N	4.0	E	35				EXEMPT	WP	D	1/1/1972	192							ORLECKY,D N	
	647825	16.0	N	4.0	E	35				EXEMPT	WP	D		170	130	8	5	5	0		MARTIN, SUSANNE,	

Source: ADWR 55- Well Registry, 2005

APPENDIX A
ADWR WELL INVENTORY

Map ID	ADWR Reg.	T		R		Sect	Acre160	Acre 40	Acre 10	Well Type	Well Use	Water Use	Date	Depth	WL	Width	Pump Rate	Test Rate	DD	Drill Log	Owner	Cancel
	648210	16.0	N	4.0	E	35				EXEMPT	WP	D									BAIRD,D R	
	803053	16.0	N	4.0	E	35				EXEMPT	WP	D,IRR	9/27/1973	232		6					DALLAS LIVING TRUST	
	803076	16.0	N	4.0	E	35				EXEMPT	WP	D	1/1/1965	150		8					WINSTON,T	
	803220	16.0	N	4.0	E	35				EXEMPT	WP	IRR,D,S									MCDERMOTT, THOMAS,	
	803436	16.0	N	4.0	E	35				EXEMPT	WP	D									COPPINGER, ART,D	
	807900	16.0	N	4.0	E	35				EXEMPT											STALLINGS	
	503059	16.0	N	4.0	E	35	NE			EXEMPT	WP	D	3/4/1981	280	180	6	30	30	0	X	METZNER,M L	
	630283	16.0	N	4.0	E	35	NE	NE		EXEMPT	WP	D	9/16/1971	212		7					PETERSON	
	803234	16.0	N	4.0	E	35	NE	NE		EXEMPT	WP	D,IRR	6/1/1980	450	150	10	28				SCARBROUGH, RONALD,	
	643452	16.0	N	4.0	E	35	NE	NE	NE	EXEMPT	WP	D	11/1/1970	50	14	6	10	10	0		STIPEK	
	644951	16.0	N	4.0	E	35	NE	NE	NE	EXEMPT	WP	D	10/30/1975	358		8	1	1	0		SCHERF,C W	
	645077	16.0	N	4.0	E	35	NE	NE	NE	EXEMPT	WP	D	1/1/1967	275	30	5	1	1	0		MERKLEY,G P	
	645078	16.0	N	4.0	E	35	NE	NE	NE	EXEMPT	WP	D	1/1/1967	500	30	5	5	5	0		MERKLEY,G P	
	646909	16.0	N	4.0	E	35	NE	NE	NE	EXEMPT	WP	D,IRR	10/14/1965	80	15	6	25	25	0		HALE	
	506162	16.0	N	4.0	E	35	NE	NE	NE	EXEMPT	WP	D	10/10/1983	250	100	5	15	15		X	BRIERS	
156	513917	16.0	N	4.0	E	35	NE	NE	NE	NON-EXEMPT	WP	D	5/31/1986	575	150	8	10	75	0	X	MCABEE, BETTY,V	
	630868	16.0	N	4.0	E	35	NE	NE	NE	EXEMPT	WP	D	4/9/1973	90		6	9	9	0		GILKERSON, JAMES,R	
	901220	16.0	N	4.0	E	35	NE	NE	NW	EXEMPT		D	1/26/2004	350	122	6				X	MOYER	
	642428	16.0	N	4.0	E	35	NE	NE	SW	EXEMPT	WP	D				4					MURDOCH-MCNAMEE, J.T,	
	507423	16.0	N	4.0	E	35	NE	NE	SE	EXEMPT	WP	D	3/16/1984	510	56	5	20	20	0	X	WEINBERG,M	
	575098	16.0	N	4.0	E	35	NE	NE	SE	EXEMPT	WP	D	8/16/1999	170	17	6				X	MODERN FINANCIAL SERVICES	
	607011	16.0	N	4.0	E	35	NE	NW		EXEMPT	WP	D	10/2/1979	127		6	25				LOVE	
	642844	16.0	N	4.0	E	35	NE	NW		EXEMPT	WP	D				6	5	5	0		STURGEON,W B	
	630631	16.0	N	4.0	E	35	NE	NW	NW	EXEMPT	WP	D	1/1/1979	120		6	25	25	0		CHRISTOPHER,R D	
	530662	16.0	N	4.0	E	35	NE	NW	NW	EXEMPT	WP	D	4/24/1991	155	3	6	20	20		X	SADEGHPOUR	
	531077	16.0	N	4.0	E	35	NE	NW	NW	EXEMPT	WP	D	4/16/1991	150		6				X	ARDOIN	
	576396	16.0	N	4.0	E	35	NE	NW	NW	EXEMPT	WP	D	2/8/2000	225	21	6				X	WACKERLY	
	597556	16.0	N	4.0	E	35	NE	NW	NW	EXEMPT	WP	D	5/30/2003	220	7	7	20	20		X	HALE	
	900652	16.0	N	4.0	E	35	NE	NW	NW	EXEMPT		D		185	12	6				X	MAYER	
	900706	16.0	N	4.0	E	35	NE	NW	NW	EXEMPT		D									PIEPER	
	508761	16.0	N	4.0	E	35	NE	NW	SW	EXEMPT	WP	D	7/30/1984	110	20	6				X	GOY, PAMELIA,P	
	642871	16.0	N	4.0	E	35	NE	NW	SE	EXEMPT	WP, ABAN	D			8		50				SLAUGHTER, GLORIA,	Y
	648124	16.0	N	4.0	E	35	NE	SW		EXEMPT	WP	D	12/1/1979	215		6					ODEGARD	
	648165	16.0	N	4.0	E	35	NE	SW		EXEMPT	WP	D									MARSHALL	
	648177	16.0	N	4.0	E	35	NE	SW		EXEMPT	WP	D	1/1/1970	151							GEREAU, BONNIE JEAN,	
	648179	16.0	N	4.0	E	35	NE	SW		EXEMPT	WP	D		212	75	6					SMITH,W R	
	802234	16.0	N	4.0	E	35	NE	SW		EXEMPT	WP	D	12/15/1980	185	60	6	20	20	0		BENSON	
	648164	16.0	N	4.0	E	35	NE	SW		EXEMPT	WP	D	1/1/1970	265	70	6	30	30	0		DOWNING & JONES,	
	648133	16.0	N	4.0	E	35	NE	SW		EXEMPT	WP	D									BREIDENBACH,W W	
	559795	16.0	N	4.0	E	35	NE	SW	NE	EXEMPT	WP	D									FELLER, MARIA,	
157	608821	16.0	N	4.0	E	35	NE	SW	NE	NON-EXEMPT	WP	D		250		6					BARD,E C	
	805333	16.0	N	4.0	E	35	NE	SW	NE	EXEMPT	WP	D	6/30/1976	239	85	6	25				MORGENSON	
	507095	16.0	N	4.0	E	35	NE	SW	NW	EXEMPT	WP	D	3/29/1984	265	153	6	20	20	0	X	LAU, ROBERT,S	
	524900	16.0	N	4.0	E	35	NE	SW	NW	EXEMPT	WP	D	10/16/1989	60		6				X	CANON, ROY,F	
	801010	16.0	N	4.0	E	35	NE	SW	NW	EXEMPT	WP	D	1/1/1972	250	140	8					HAMMERLE,R	
	513694	16.0	N	4.0	E	35	NE	SW	SW	EXEMPT	WP	D	3/20/1986	200	125	6	20	20		X	ALLGOOD, ANDREW,	
	646142	16.0	N	4.0	E	35	NE	SW	SW	EXEMPT	WP	D		175	55	6	24	24	0		BENIGAR,C W	
	800004	16.0	N	4.0	E	35	NE	SW	SW	EXEMPT	WP	D		200	16	6	35	35	0		GAUTHIER, DENNIS,	
	630188	16.0	N	4.0	E	35	NE	SW	SW	EXEMPT	WP	D	5/10/1979	210	105	6	35	35	0		KELLY,T J	
	581885	16.0	N	4.0	E	35	NE	SW	SW	EXEMPT	WP	D	7/30/2000	220	60	6	35			X	PHILLIPS	
	500415	16.0	N	4.0	E	35	NE	SW	SE	EXEMPT	WP	D	7/28/1981	200	120	6	10	10		X	BLAND & KINZEY	
	805279	16.0	N	4.0	E	35	NE	SE	NE	EXEMPT	WP	D	7/26/1987	125	60	6	10				LECK, JAMES,	
	646083	16.0	N	4.0	E	35	NE	SE	SE	EXEMPT	WP	D	1/1/1973	186	165	6	28	28	0		DALL,E R	
	553397	16.0	N	4.0	E	35	NW	NW	NE	EXEMPT	WP	D	1/8/1996	192	135	6	14	20		X	SELNA & MONGINI INC,	
158	627941	16.0	N	4.0	E	35	NW	SW	SW	NON-EXEMPT	WP	D	8/31/1963	240	125	8	50				COTTONWOOD-OAK CREEK,	

Source: ADWR 55- Well Registry, 2005

APPENDIX A
ADWR WELL INVENTORY

Map ID	ADWR Reg.	T		R		Sect	Acre160	Acre 40	Acre 10	Well Type	Well Use	Water Use	Date	Depth	WL	Width	Pump Rate	Test Rate	DD	Drill Log	Owner	Cancel
	523335	16.0	N	4.0	E	35	NW	SE	NW	EXEMPT	WP	D	1/27/1988	362	116	6	20	20	0	X	MINEER, ROY,	
	650815	16.0	N	4.0	E	35	SW	NE		EXEMPT	WP	D									MILLARD,W B	
	560642	16.0	N	4.0	E	35	SW	NE	NE	EXEMPT	WP	D									CLARK, JUDITH,A	
	552182	16.0	N	4.0	E	35	SW	NE	NE	EXEMPT	WP	D	12/28/1995	160	91	6	20	20	0	X	LOPEZ	
	556244	16.0	N	4.0	E	35	SW	NE	NE	EXEMPT	WP	D	10/10/1996	158	75	6				X	SHORE, MELODIE,	
	578836	16.0	N	4.0	E	35	SW	NE	NE	EXEMPT	WP	D									CORNVILLE LAND COMPANY LL	Y
	586695	16.0	N	4.0	E	35	SW	NE	NE	EXEMPT	WP	D		395	86	6				X	CORNVILLE LAND COMPANY, L	
	515229	16.0	N	4.0	E	35	SW	NE	NW	EXEMPT	WP	D	9/1/1986	140	60	6	20	20		X	ROSENBERG	
	901982	16.0	N	4.0	E	35	SW	NE	NW	EXEMPT		D		190	78	6				X	ROBERTS	
	535564	16.0	N	4.0	E	35	SW	NE	SW	EXEMPT	WP	D	7/23/1992	462	138	6				X	HARGUS, KEN,	
	086897	16.0	N	4.0	E	35	SW	NE	SE	EXEMPT	WP	D	1/1/1980	220	50	6					COPPINGER, ART,D	
	501827	16.0	N	4.0	E	35	SW	NE	SE	EXEMPT	WP	D	3/1/1982	128	30	6	22	22		X	MONGINI & SELMA,	
	522221	16.0	N	4.0	E	35	SW	NE	SE	EXEMPT	WP	D	10/14/1988	270	40	6	10	10	0	X	HAHN ENT. INC.,	
	553608	16.0	N	4.0	E	35	SW	NE	SE	EXEMPT	WP	D	1/11/1996	125	65	6	12	12		X	SHIVEL, PHILLIP,	
	552690	16.0	N	4.0	E	35	SW	NE	SE	EXEMPT	WP	D	12/13/1995	150	75	6	16	16		X	HARDY	
	556223	16.0	N	4.0	E	35	SW	NE	SE	EXEMPT	WP	D	10/4/1996	167	75	6				X	JEFFORDS, WANDA,	
	571922	16.0	N	4.0	E	35	SW	NE	SE	EXEMPT	WP	D	3/25/1999	345	80	6	10	10		X	HULGAN	
	573100	16.0	N	4.0	E	35	SW	NE	SE	EXEMPT											ELLIOTT	
	583011	16.0	N	4.0	E	35	SW	NE	SE	EXEMPT	WP	D	9/26/2000	115	75	6				X	HUDSON	
	543476	16.0	N	4.0	E	35	SW	NW	NE	EXEMPT	WP	D	6/14/1994	254	85	7	16			X	HAWLEY	
	557805	16.0	N	4.0	E	35	SW	NW	NE	EXEMPT	WP	D	8/14/1996	295	74	6				X	WYLES	
	808235	16.0	N	4.0	E	35	SW	NW	NE	EXEMPT	WP	,D	12/14/1981	252	90	1					BALDWIN	
	516743	16.0	N	4.0	E	35	SW	NW	NE	EXEMPT	WP	D	3/2/1987	290	150	6	10	6		X	WYLES	
	560259	16.0	N	4.0	E	35	SW	NW	NE	EXEMPT	WP	D	12/13/1996	195	137	6				X	KOCH, CHARLOTTE,	
	569531	16.0	N	4.0	E	35	SW	NW	NE	EXEMPT	WP	D	10/7/1998	556	92	5				X	CORNVILLE LAND COMPANY, L	
	565557	16.0	N	4.0	E	35	SW	NW	NW	EXEMPT	WP	D		360	120	6				X	HERNANDEZ	
	524340	16.0	N	4.0	E	35	SW	NW	NW	EXEMPT	WP	D	5/9/1989	232	1	6	10	10		X	MARTIN	
	802899	16.0	N	4.0	E	35	SW	NW	NW	EXEMPT	WP	IRR,D,S	1/28/1980	225	157	6	10	10	0		WILDER	
	529946	16.0	N	4.0	E	35	SW	NW	NW	EXEMPT	WP	D	1/23/1991	530	60	6	15	13		X	WILCOX	
	513354	16.0	N	4.0	E	35	SW	NW	SW	EXEMPT	WP	D	2/11/1986	220	60	6	12	12		X	CRICK	
	525114	16.0	N	4.0	E	35	SW	NW	SW	EXEMPT	WP	D									STEILEN, GEORDIE,	Y
	545795	16.0	N	4.0	E	35	SW	NW	SW	EXEMPT	WP	D	10/17/1994	183	156	6				X	ROJAS	
	802657	16.0	N	4.0	E	35	SW	NW	SW	EXEMPT	WP	IRR,D	1/24/1971	205	130	6	18	18	0		HERMAN	
	806504	16.0	N	4.0	E	35	SW	NW	SW	EXEMPT	WP	NONE		200		6					SELNA & MONGINI,	
	500759	16.0	N	4.0	E	35	SW	NW	SW	EXEMPT	WP	D	1/1/1981	208	80	6		65	0	X	MULCAIRE,T	
	808298	16.0	N	4.0	E	35	SW	NW	SW	EXEMPT	WP	D	3/15/1980	200	126	6					VANEVERA	
	570257	16.0	N	4.0	E	35	SW	NW	SW	EXEMPT	WP	D	9/29/1998	245	175	6				X	LOFTIN	
	593954	16.0	N	4.0	E	35	SW	NW	SW	EXEMPT	WP	D	7/6/2003	240	138	5				X	BARAJAS	
	501109	16.0	N	4.0	E	35	SW	NW	SE	EXEMPT	WP	D	12/1/1982	200	165	6	10	10	0	X	WRIGHT	
	611470	16.0	N	4.0	E	35	SW	SW	NE	EXEMPT	WP	D	5/26/1980	200	100	6	20				HOUSTON	
	647682	16.0	N	4.0	E	35	SW	SW	NE	EXEMPT	WP	D	12/11/1979	189	150						MCDERMOTT, THOMAS,	
	649675	16.0	N	4.0	E	35	SW	SW	NE	EXEMPT	WP	D	6/21/1972	180	120	6	20	20	0		CLELAND,H M	
	802150	16.0	N	4.0	E	35	SW	SW	NE	EXEMPT	WP	D	9/15/1972	214	100	6	8	8	0		DAIL,L K	
	900960	16.0	N	4.0	E	35	SW	SW	NE	EXEMPT		D		238		6				X	HANDVERGER	
	577129	16.0	N	4.0	E	35	SW	SW	NE	EXEMPT	WP	D	11/6/1999	225	150	6	13	6		X	PEDERSON	
	808353	16.0	N	4.0	E	35	SW	SW	NE	EXEMPT	WP	D	1/1/1971								COOK	
	508212	16.0	N	4.0	E	35	SW	SW	NW	EXEMPT	WP	D	6/14/1984	208	52	5	10	10	0	X	EASON	
	572296	16.0	N	4.0	E	35	SW	SW	NW	EXEMPT	WP	D	2/6/1999	241	180	6				X	KRUEGER	
	599951	16.0	N	4.0	E	35	SW	SW	NW	EXEMPT	WP	D	10/10/2003	200	140	6				X	STEVENS	
159	511880	16.0	N	4.0	E	35	SW	SW	SW	NON-EXEMPT	WP	D	8/8/1985	180	61	4	15	15		X	RICOHERMOSO, BARRY,	
160	513004	16.0	N	4.0	E	35	SW	SW	SW	NON-EXEMPT	WP	IRR,S	12/24/1985	198	105	6	50	38		X	RUSTY'S MORNING,	
	801764	16.0	N	4.0	E	35	SW	SW	SW	EXEMPT	WP	D,IRR	10/27/1980	193	40	6	12	12	0		HOUSTON, ELLEN,	
	637497	16.0	N	4.0	E	35	SW	SW	SW	EXEMPT	WP	D,IRR	1/12/1976	153	90	6	15	15	0		MONTGOMERY, CLIFFORD,	
	800168	16.0	N	4.0	E	35	SW	SW	SW	EXEMPT	WP	D	3/1/1972	402	90	6	20	20	0		AGUILAR	
	502630	16.0	N	4.0	E	35	SW	SW	SW	EXEMPT	WP	D	4/30/1982	177	65	6	15	15	0	X	CURETON, ROXEN & EVA,	

Source: ADWR 55- Well Registry, 2005

APPENDIX A
ADWR WELL INVENTORY

Map ID	ADWR Reg.	T		R		Sect	Acre160	Acre 40	Acre 10	Well Type	Well Use	Water Use	Date	Depth	WL	Width	Pump Rate	Test Rate	DD	Drill Log	Owner	Cancel
	650597	16.0	N	4.0	E	35	SW	SW	SW	EXEMPT	WP	D	6/23/1994	200	90	6	10	6			CRABTREE, CLYDE,	
	802606	16.0	N	4.0	E	35	SW	SW	SE	EXEMPT	WP	D	2/1/1973	190	160	6	12	12	0		EDSON,T M	
	570685	16.0	N	4.0	E	35	SW	SW	SE	EXEMPT	WP	D	2/28/1999	225	100	8				X	CRICK	
	509029	16.0	N	4.0	E	35	SW	SE	NE	EXEMPT	WP	D	11/20/1984	316	51	6	20	20		X	MCIIVOY, DAVE,	
	565000	16.0	N	4.0	E	35	SW	SE	NE	EXEMPT	WP	D		175	65	6				X	VAN HORN	
	562711	16.0	N	4.0	E	35	SW	SE	NE	EXEMPT	WP	D	6/11/1997	205	77	6				X	ELLIOTT	
	566565	16.0	N	4.0	E	35	SW	SE	NE	EXEMPT	WP	D									HART	Y
	566575	16.0	N	4.0	E	35	SW	SE	NE	EXEMPT	WP	D	2/27/1998	325	70	6				X	HART	
	808339	16.0	N	4.0	E	35	SW	SE	NE	EXEMPT	WP	D									MORALES, TRUSTEE	
	200089	16.0	N	4.0	E	35	SW	SE	NE	EXEMPT	WP	D	8/10/2004	400	70	6	20	20		X	UETZ	N
	523586	16.0	N	4.0	E	35	SW	SE	NW	EXEMPT	WP	D	4/10/1989	170	100	5				X	LIGHTFOOT, JANINE,	
	532938	16.0	N	4.0	E	35	SW	SE	NW	EXEMPT	WP	D									JONES, HAZELEE,	Y
	544521	16.0	N	4.0	E	35	SW	SE	NW	EXEMPT	WP	D									GUNNARSON, MEL,	Y
	902889	16.0	N	4.0	E	35	SW	SE	NW	EXEMPT		D									MAXWELL	
	511748	16.0	N	4.0	E	35	SW	SE	SW	EXEMPT	WP	D	6/30/1985	208	50	4				X	EDSON,T	
	555299	16.0	N	4.0	E	35	SW	SE	SW	EXEMPT	WP	D	3/16/1996	160	90	6				X	PETERSON	
	643218	16.0	N	4.0	E	35	SW	SE	SW	EXEMPT	WP	D	7/6/1972	210	112	8	20	20	0		KENNERLY, JEANNETTE,	
	646678	16.0	N	4.0	E	35	SW	SE	SW	EXEMPT	WP	D,IRR	6/17/1995	470	94	6	9				LINGO, RANDY,	
	648816	16.0	N	4.0	E	35	SW	SE	SW	EXEMPT	WP	D	5/27/1979	200	110	6	15	15	0		HUMPHREY,M E	
161	808549	16.0	N	4.0	E	35	SW	SE	SW	NON-EXEMPT	WP	D		128	106	6					WRUBEL	
	506723	16.0	N	4.0	E	35	SW	SE	SE	EXEMPT	WP	D	1/18/1984	345	63	6	12	12		X	WALTERS,P	
	511966	16.0	N	4.0	E	35	SW	SE	SE	EXEMPT	WP	D	9/25/1985	266	113	6	10	1		X	BITTING,H	
	548792	16.0	N	4.0	E	35	SW	SE	SE	EXEMPT	WP	D,IRR	5/4/1995	180	95	6	10	5		X	BURCHFIELD, PAUL,	
	602395	16.0	N	4.0	E	35	SW	SE	SE	EXEMPT	WP	D	1/1/1979	241	90	6	8				HOLT,G L	
	602349	16.0	N	4.0	E	35	SE	SW	NE	EXEMPT	WP	D	10/1/1979	200	130	6	15	15	0		WHITE, PEGGY,	
	801751	16.0	N	4.0	E	35	SE	SW	SW	EXEMPT	WP	D	1/1/1970			6	15	15	0		ARMER JR,J C	
	550925	16.0	N	4.0	E	35	SE	SE	NW	EXEMPT	WP	D									LYONS, RICK,	Y
	630896	16.0	N	4.0	E	35	SE	SE	NW	EXEMPT	WP	D	7/15/1977	180		8	15	15	0		OAK CREEK RANCH SCH,	
162	900909	16.0	N	4.0	E	35	SE	SE	SE	NON-EXEMPT		COM	1/27/2005	660	98	8	175	175		X	MAK	
	637869	16.0	N	5.0	E	19	NW	NW	SE	EXEMPT	WP	D,S	1/1/1953	480	105	8	30	30	0		DICKISON,C K	
	540884	16.0	N	5.0	E	34	NE	SW	SW	EXEMPT	WP	D	12/12/1993	400	340	6				X	OHALLERAN, THOMAS,C	
	567550	16.0	N	5.0	E	34	SW	SE	NE	EXEMPT	WP	D	5/20/1998	295	105	6				X	BENNY	
	802876	16.0	N	5.0	E	35	NW	SW	SW	EXEMPT	WP	D				6	15	15	0		HAYES,J G	

Source: ADWR 55- Well Registry, 2005

WELL DRILLER REPORTS

ARIZONA DEPARTMENT OF WATER RESOURCES
500 North 3rd Street
Phoenix, Arizona 85004

RECEIVED
MAR 30 2001
RECORDS MGT

WELL DRILLER REPORT

This report should be prepared by the driller in all detail and filed with the Department within 30 days following completion of the well.

1. NAPCO DRILLING DBA NORTHERN ARIZONA PUMP, INC.
P.O. BOX 252
CORNVILLE, AZ 86325-0252

2. Owner Name: GERALD RABY
Address: P.O. BOX 729 CORNVILLE AZ 86325
City State Zip

3. Location: 15 (N/S) 4 (E/W) 15 ¼ SW ¼ NW ¼ SW
Township Range Section 10-acre 40-acre 160-acre

4. Well Registration No. 55-585536 (Required)

5. Permit No. A(15-4)15CBC (If Issued)

DESCRIPTION OF WELL

6. Total depth of hole 520 ft.
7. Type of casing STEEL .188 WALL / PVC F-480
8. Diameter and length of casing 8 in. from 1' AGL to 40', 6 in from 1' AGL to 520'
9. Method of sealing at reduction points GROUT
10. Perforated from 360 to 420, from 440 to 520 from ____ to ____
11. Size of cuts 3/16 x 4½ Number of cuts per foot 10
12. If screen was installed: Length 0 ft. Diam ____ in. Type ____
13. Method of construction DRILLED
(drilled, dug, driven, bored, jetted, etc)
14. Date started 2 28 01
Month Day Year
15. Date completed 3 1 01
Month Day Year
16. Depth to water 270' ft. (If flowing well, so state)
17. Describe point from which depth measurements were made, and give sea_level elevation if available
GROUNDLEVEL TO TOP OF WATER APPROX 3550
18. If flowing well, state method of flow regulation: ____
19. Remarks: AIR DEVELOPED @ 20 GPM W/ 200' DRAWDOWN

DO NOT WRITE IN THIS SPACE
OFFICE RECORD
Registration No. 55- 585536
File No. A(15-4) 15 CBC
Received ____ By ____
Entered ____ By ____

DWR-55-55-7/95 (Rev.)

ENTERED APR 6 2001

LOG OF WELL

Indicate depth at which water was first encountered, and the depth and thickness of water bearing beds. If water is artesian, indicate depth at which encountered, and depth to which it rose in well.

From (feet)	To (feet)	Description of formation material
0	10	TOPSOIL
10	30	SAND
30	200	SANDSTONE W/STREAK CLAY
200	260	CLAY
260	520	CLAY & LIMESTONE W/WATER -
		2-3 GPM @ 400' - 20 GPM @ 520'

I hereby certify that this well was drilled by me (or under by supervision), and that each and all statements herein contained are true to the best of my knowledge and belief.

Driller Name: NAPCO DRILLING DBA NORTHERN ARIZONA PUMP, II

P.O. BOX 252
Street

CORNVILLE, AZ 86325-0252 (520) 634-4978
City State Zip Phone No.

Signature of Driller Date

2

STATE OF ARIZONA

DEPARTMENT OF
WATER RESOURCES

WELL DRILLER REPORT

This report should be prepared by the driller in all detail and filed with the Department within 30 days following completion of the well.

1. Owner Steve T Moffitt
Name
~~4328 Kaye Lane Yorba Linda CA 92686~~ CORNVILLE, AZ. 86325
Address

2. Lessee or Operator
Name
Address

3. Driller C. L. HOLLAMON
Box 23
~~Camp Verde, Az. 86322~~
Name
Address

4. Location of well:

5. Permit No. (if issued)

DESCRIPTION OF WELL

6. Total depth of hole 355 ft.
7. Type of Casing steel
8. Diameter and length of casing 6" in. from 0" to 293', in from to .
9. Method of sealing at reduction points
10. Perforated from to , from to , from to
11. Size of cuts
12. If screen was installed: Length ft. Diam in. Type
13. Method of construction drilled
drilled, dug, driven, bored, jetted, etc.
14. Date started 11 (Month) 3 (day) 82 (year)
15. Date completed 12 (Month) 6 (day) 82 (year)
16. Depth to water SWL 65 ft. (If flowing well, so state.)
17. Describe point from which depth measurements were made, and give sea-level elevation if available.
18. If flowing well, state method of flow regulation
19. REMARKS:

DO NOT WRITE IN THIS SPACE
OFFICE RECORD
Registration No. 55-503086
Received By
Entered 12·13·8 By
File No. A(15-[illegible])10dcd

MICROFILMED

(Well log to appear on Reverse side)

RECEIVED
DEC 8 1982
DEPT. OF
WATER RESOURCES

LOG OF WELL

Indicate depth at which water was first encountered, and the depth and thickness of water bearing beds. If water is artesian, indicate depth at which encountered, and depth to which it rose in well.

FROM (FEET)	TO (FEET)	DESCRIPTION OF FORMATION MATERIAL
0	22	boulders
22	70	ribs of hard red sandstone + limestone
		6"-4' thick w/ layers of clay
70	83	hard red sandstone
83	91	hard pack red clay
91	114	very hard ✓ Sandstone
114	138	hard pack brown clay
138	147	✓ red sandstone
147	153	✓ pack red clay
153	159	hard red ss - 1st water 157', no sand,
		SWL 90' 5 G.P.M.
159	163	hard pk red clay
163	191	✓ red ss
191	203	soft red sandy clay w/ blow sand
203	207	very hard white ss
207	225	hard pk red clay w/ sand
225	233	sandy clay conglomerate
233	235	hard red ss
235	257	red clay w/ blow sand
257	260	hard rld ss - 2nd water w/ blow sand SWL 65'
260	267	sandy clay congl
267	270	very hard white ss
270	294	hard basalt congl
294	296	very hard white ss
296	314	hard pk red clay - no sand
314	324	hard red ss
324	332	hard pk red clay
332	338	✓ ✓ brown clay
338	339	med hard white limestone
339	355	hard white limestone - 1st water 345' 30 G.P.M.
355		congl. basalt
		293' of steel 6" casing
		SWL 65' test bailed 30 G.P.M. drawdown to 80'

I hereby certify that this well was drilled by me (or under my supervision), and that each and all of the statements herein contained are true to the best of my knowledge and belief.

Driller Hollamon & Sons Drilling
Name
Loft Hollamon by gH

C. L. HOLLAMON
Box 23
Camp Verde, Az. 86322
Address

Date 12-6-82

2-73

3

STATE OF ARIZONA
DEPARTMENT OF WATER RESOURCES
15 South 15th Avenue
Phoenix, Arizona 85007

WELL DRILLER REPORT

This report should be prepared by the driller in all detail and filed with the Department within 30 days following completion of the well.

1. Owner SAM KINARD
Name
4651 N. ALTA HACIENDA PHX AZ 85018
Mailing Address

2. Driller NAPCO
Name
PO. BOX 252 CORNVILLE AZ 86325
Mailing Address

3. Location of well: 15N-4E-10 SW NE SE

4. Permit No. 55-529591
(If issued)

DESCRIPTION OF WELL

5. Total depth of hole 307 ft.

6. Type of casing STEEL .188 WALL

7. Diameter and length of casing 6 in. from 1" ACL to 265 in from ____ to ____.

8. Method of sealing at reduction points GROUT

9. Perforated from 0 to 0, from ____ to ____, from ____ to ____.

10. Size of cuts 0 Number of cuts per foot ____

11. If screen was installed: Length 0 ft. Diam ____ in. Type ____

12. Method of construction DRILLED
drilled, dug, driven, bored, jetted, etc

13. Date started 1 (Month) 15 (Day) 91 (Year)

14. Date completed 2 (Month) 6 (Day) 91 (Year)

15. Depth to water 30" ft. (If flowing well, so state)

16. Describe point from which depth measurements were made, and give sea-level elevation if available GROUND LEVEL APROX 3500'

17. If flowing well, state method of flow regulation: —

18. Remarks: DRAWDOWN @ 50 GPM 18'

DO NOT [illegible]

REG. No. 55-529591
A(15-4)10 DAC

File No.

Entered ____ By ____

DWR-55-55-2/89

LOG OF WELL

Indicate depth at which water was first encountered, and the depth and thickness of water bearing beds. If water is artesian, indicate depth at which encountered, and depth to which it rose in well.

From (feet)	To (feet)	Description of formation material
0	4	TOPSOIL
4	15	BOULDERS
15	19	CLAY
19	21	CALECHE
21	83	CLAY & STREAKS OF CALECHE (1st WTR)
83	87	BOULDERS (2ND WATER)
87	127	BROWN CLAY & SAND
127	130	CONGLOMERATE
130	158	SAND & CLAY
158	163	QUICKSAND
163	168	CLAY
168	238	CLAY W/ STREAKS OF SANDSTONE
238	265	WHITE LIME W LIMESTONE STREAKS
265	304	CLAY W/ STREAKS OF CONGLOMERATE
304	305	SANDSTONE
305	307	SOFT CLAY

I hereby certify that this well was drilled by me (or under my supervision), and that each and all statements herein contained are true to the best of my knowledge and belief.

Driller [signature]
Name

P.O. BOX 252
Address

CORNVILLE AZ 86325
City State Zip

Date 2-18-91

DEPARTMENT OF WATER RESOURCES
15 South 15th Avenue
Phoenix, Arizona 85007

RECEIVED AUG - 6 1991 OPERATIONS DIV.

Registration No. 55-529591

File No. A(15-4)10 DAC

COMPLETION REPORT

1. Per A.R.S. §45-600, the Completion Report is to be filed with the Department within 30 days after installation of pump equipment by the registered well owner.
2. Drawdown of the water level for a non-flowing well should be measured in feet after not less than 4 hours of continuous operation and while still in operation and for a flowing well the shut-in pressure should be measured in feet above the land or in pounds per square inch at the land surface.
3. The static groundwater level should be measured in feet from the land surface immediately prior to the well capacity test.
4. The tested pumping capacity of the well in gallons per minute for a non-flowing well should be determined by measuring the discharge of the pump after continuous operation for at least 4 hours and for a flowing well by measuring the natural flow at the land surface.

LOCATION OF THE WELL:

15N	4E	10	SW NESE
Township	Range	Section	¼ ¼ ¼

EQUIPMENT INSTALLED:

Kind of pump SUBM. (Turbine, centrifugal, etc.)

Kind of power ELECT. (Electric, natural gas, gasoline, etc.) H.P. Rating of Motor 5.0

Pumping Capacity 80 (Gallons per minute) Date pump installed: 5-6-91

WELL TEST:

Test pumping capacity 80 (Gallons per minute) Date Well Tested: 5-10-91

Method of Discharge Measurement WEIR (Weir, orifice, current meter, etc.)

Static Groundwater Level 30" ft. Drawdown 70 ft.

Total Pumping Lift 73' ft. Drawdown -0- lbs. (Flowing Well)

I HEREBY CERTIFY that the above statements are true to the best of my knowledge and belief.

SAM A. KINARD
Print Well Owner's Name

8-4, 1991
Date

Signature of Well Owner or Agent

PO BOX 252
Address

CORNVILLE AZ 86325
City State Zip

DWR-55-56-2/88

MICROFILMED

ENTERED AUG - 8 1991

Arizona Department of Water Resources
Records Management Section
500 N. 3rd Street ❖ Phoenix, Arizona 85004
(602) 417-2405 ❖ (800) 352-8488
www.water.az.gov

Well Driller Report and Well Log

4

- Review instructions prior to completing form
- This report should be prepared by the driller in detail and filed with the Department within 30 days following completion of the well.

** PLEASE PRINT CLEARLY **

RECEIVED JUN - 6 2005 Information Management

FILE NUMBER	A(15-4)10 ADD
WELL REGISTRATION NUMBER	55 - 901981
PERMIT NUMBER (IF ISSUED)	

SECTION 1. REGISTRY INFORMATION

Well Owner

FULL NAME OF COMPANY, ORGANIZATION, OR INDIVIDUAL	BENTLAGE, DEBRA
MAILING ADDRESS	710 GOLF VIEW DR
CITY / STATE / ZIP CODE	CORNVILLE, AZ, 86325
CONTACT PERSON NAME AND TITLE	
TELEPHONE NUMBER	928 649-3188
FAX	

Location of Well

WELL LOCATION ADDRESS (IF ANY): ANGEL CREST DR.

TOWNSHIP (N/S)	RANGE (E/W)	SECTION	160 ACRE	40 ACRE	10 ACRE
15N	04 E	10	NE ¼	SE ¼	SE ¼

LATITUDE			LONGITUDE		
34 °	42 '	41.9 ~~69~~ N	111 °	44 '	13.7 ~~23~~ W

LAND SURFACE ELEVATION AT WELL: 3413 Feet Above Sea Level

METHOD OF LATITUDE / LONGITUDE (CHECK ONE): ☒ Hand-Held ☐ USGS Quad Map ☐ Conventional Survey ☒ GPS ☐ Survey-Grade

COUNTY ASSESSOR'S PARCEL ID NUMBER

BOOK	MAP	PARCEL
407	17	026J

COUNTY WHERE WELL IS LOCATED: YAVAPAI

SECTION 2. DRILLING AUTHORIZATION

Drilling Firm

NAME	NAPCO DRILLING dba Northern Arizona Pump, Inc.
DWR LICENSE NUMBER	377
TELEPHONE NUMBER	928-634-4978
FAX	

SECTION 3. WELL CONSTRUCTION DETAILS

DATE WELL CONSTRUCTION STARTED	DATE WELL CONSTRUCTION COMPLETED	IF FLOWING WELL, METHOD OF FLOW REGULATION
5-17-05	5-27-05	☐ Valve ☐ Other:

Drill Method

CHECK ONE
- ☒ Air Rotary
- ☐ Bored or Augered
- ☐ Cable Tool
- ☐ Dual Rotary
- ☐ Mud Rotary
- ☐ Reverse Circulation
- ☐ Driven
- ☐ Jetted
- ☐ Air Percussion / Odex Tubing

Method of Well Development

CHECK ONE
- ☐ Airlift
- ☐ Bail
- ☐ Surge Block
- ☐ Surge Pump
- ☐ Other *(please specify)*:

Method of Sealing at Reduction Points

CHECK ONE
- ☒ None
- ☐ Packed
- ☐ Swedged
- ☐ Welded
- ☐ Other *(please specify)*:

Water Level Information

STATIC WATER LEVEL: 190 Feet Below Land Surface

DATE MEASURED: 5-27-05

ENTERED JUN - 7 2005

Well Driller Report and Well Log

WELL REGISTRATION NUMBER
55 - 901981

SECTION 4. WELL CONSTRUCTION DESIGN (AS BUILT) (attach additional page if needed)

Borehole			Installed Casing														
DEPTH FROM SURFACE		BOREHOLE DIAMETER (inches)	DEPTH FROM SURFACE		OUTER DIAMETER (inches)	MATERIAL TYPE (T)				PERFORATION TYPE (T)						SLOT SIZE IF ANY (inches)
FROM (feet)	TO (feet)		FROM (feet)	TO (feet)		STEEL	PVC	ABS	IF OTHER TYPE, DESCRIBE	BLANK OR NONE	WIRE WRAP	SHUTTER SCREEN	MILLS KNIFE	SLOTTED	IF OTHER TYPE, DESCRIBE	
0	20	10	0	328	6 3/8	X				X						
20	328	8	328	366	NONE											
328	366	6														

Installed Annular Material											
DEPTH FROM SURFACE		ANNULAR MATERIAL TYPE (T)								FILTER PACK		
						BENTONITE						
FROM (feet)	TO (feet)	NONE	CONCRETE	NEAT CEMENT OR CEMENT GROUT	CEMENT-BENTONITE GROUT	GROUT	CHIPS	PELLETS	IF OTHER TYPE OF ANNULAR MATERIAL, DESCRIBE	SAND	GRAVEL	SIZE
0	20		X									
20	328								CAVINGS & CUTTINGS			

DEPTH OF BORING	DEPTH OF COMPLETED WELL
366 Feet Below Land Surface	366 Feet Below Land Surface

ENTERED JUN - 7 2005

Well Driller Report and Well Log

WELL REGISTRATION NUMBER
55 - 901981

SECTION 5. GEOLOGIC LOG OF WELL

DEPTH FROM SURFACE FROM (feet)	TO (feet)	Description Describe material, grain size, color, etc.	Check (T) every interval where water was encountered (if known)
0	40	BOULDERS	
40	110	SANDY CLAY	
110	133	LIMESTONE w/ STREAKS OF CLAY	
133	150	SANDSTONE	
150	180	SANDY CLAY	
180	316	RED CLAY	
316	326	RED SAND	
326	362	CONGLOMERATE	X
362	364	CLAY (BROWN)	

5

ARIZONA DEPARTMENT OF WATER RESOURCES
500 North 3rd Street
Phoenix, Arizona 85004

WELL DRILLER REPORT

This report should be prepared by the driller in all detail and filed with the Department within 30 days following completion of the well.

RECEIVED MAR 25 2002 RECORDS MGT

1. K. P. VENTURES WELL DRILLING & PUMP SERVICE
P.O. BOX 2411
COTTONWOOD, AZ 86326-2411

2. Owner Name: Ray Morris
Address: 310 Northview Rd Sedona, AZ 86336
City State Zip

3. Location: 15 (N/S) 4 (E/W) 11 ¼ SW ¼ SW ¼ NW
Township Range Section 10-acre 40-acre 160-acre

4. Well Registration No. 55-589989 (Required)

5. Permit No. A (15-4) 11 BCC (If Issued)

DESCRIPTION OF WELL

6. Total depth of hole 302 ft.
7. Type of casing Steel
8. Diameter and length of casing 6 in. from 1' above ground to 242 in from ____ to ____
9. Method of sealing at reduction points Cement grout
10. Perforated from —— to ——, from ____ to ____ from ____ to ____
11. Size of cuts —— Number of cuts per foot ____
12. If screen was installed: Length —— ft. Diam ____ in. Type ____
13. Method of construction Drilled
(drilled, dug, driven, bored, jetted, etc)
14. Date started 2 15 02
Month Day Year
15. Date completed 2 20 02
Month Day Year
16. Depth to water 212 ft. (If flowing well, so state)
17. Describe point from which depth measurements were made, and give sea_level elevation if available
1' above ground
18. If flowing well, state method of flow regulation: ____
19. Remarks: Air developed at 10 GPM

DO NOT WRITE IN THIS SPACE
OFFICE RECORD
Registration No. 55- 589989
File No. A(15-4) 11 BCC
Received ____ By ____
Entered ____ By ____

DWR-55-55-7/95 (Rev.)

LOG OF WELL

Indicate depth at which water was first encountered, and the depth and thickness of water bearing beds. If water is artesian, indicate depth at which encountered, and depth to which it rose in well.

From (feet)	To (feet)	Description of formation material
0	4	Top Soil
4	180	Red Sand with Sandstone ledges
180	210	Brown, sandy clay with Sandstone ledges
210	257	Sandstone & clay conglomerate
257	285	Clay conglomerate with water
285	302	Clay conglomerate with Sand

I hereby certify that this well was drilled by me (or under by supervision), and that each and all statements herein contained are true to the best of my knowledge and belief.

Driller Name: K. P. VENTURES WELL DRILLING & PUMP SERVICE

P.O. BOX 2411
Street

COTTONWOOD, AZ 86326-2411
City State Zip Phone No.

Kenny Porter 3/02/02
Signature of Driller Date

STATE OF ARIZONA
DEPARTMENT OF WATER RESOURCES
99 EAST VIRGINIA AVENUE
PHOENIX, ARIZONA 85004

6

WELL DRILLER REPORT

This report should be prepared by the driller in all detail and filed with the Department within 30 days following completion of the well.

1. Owner Ted Cooke
Name
Po Box 973 Cornville Az 86325
Mailing Address

2. Driller Floyd matley Po Box 1687
Name
Cottonwood Az 86326
Mailing Address

3. Location of well: Cornville

4. Permit No. 55-522052
(if issued)

SEP 1988
DEPARTMENT OF WATER RESOURCES

DESCRIPTION OF WELL

5. Total depth of hole 300 ft.

6. Type of casing Steel & Pvc

7. Diameter and length of casing 6 in. from 0 to 40, 5 in from 0 to 300.

8. Method of sealing at reduction points Cement

9. Perforated from 220 to 300, from ____ to ____, from ____ to ____.

10. Size of cuts 1/4' Number of cuts per foot 3

11. If screen was installed: Length ____ ft. Diam ____ in. Type ____

12. Method of construction ____
(drilled) dug, driven, bored, jetted, etc.

13. Date started 9 7 88
Month Day Year

14. Date completed 9 15 88
Month Day Year

15. Depth to water 180' ft. (If flowing well, so state.)

16. Describe point from which depth measurements were made, and give sea-level elevation if available ground level 3500'

17. If flowing well, state method of flow regulation: ____

18. Remarks: ____

E
55-522052
A(15-4)11 bcd
Entered ENTERED SEP 26 1988 By ____

DWR-55-6-Rev. 8/85

LOG OF WELL

Indicate depth at which water was first encountered, and the depth and thickness of water bearing beds. If water is artesian, indicate depth at which encountered, and depth to which it rose in well.

From (feet)	To (feet)	Description of formation material
0	12	OVER BURDEN
12	28	Sand Stone
28	49	Pink lime
49	96	Sand stone
96	134	Brown clay & Sand stone
134	190	Pink lime
190	126	Sand stone
126	204	Quick sand
204	259	Sand Stone ledges
259	228	lime white & Pink
228	300	Quick Sand
		Thickness 120

I hereby certify that this well was drilled by me (or under my supervision), and that each and all of the statements herein contained are true to the best of my knowledge and belief.

Driller Floyd mattey
Name

Po Box 1687
Address

Cottonwood AZ 86326
City State Zip

Date 9-19-88

DEPARTMENT OF WATER RESOURCES
15 South 15th Avenue
Phoenix, Arizona 85007

Registration No. 55-522052

File No. A(15-4)11 bcd

COMPLETION REPORT

1. Per A.R.S. §45-600, the Completion Report is to be filed with the Department within 30 days after installation of pump equipment by the registered well owner.
2. Drawdown of the water level for a non-flowing well should be measured in feet after not less than 4 hours of continuous operation and while still in operation and for a flowing well the shut-in pressure should be measured in feet above the land or in pounds per square inch at the land surface.
3. The static groundwater level should be measured in feet from the land surface immediately prior to the well capacity test.
4. The tested pumping capacity of the well in gallons per minute for a non-flowing well should be determined by measuring the discharge of the pump after continuous operation for at least 4 hours and for a flowing well by measuring the natural flow at the land surface.

LOCATION OF THE WELL:
PARCEL NO 407-04-048 Yavapai County, Camville Arizona

Township Range Section ¼ ¼ ¼

EQUIPMENT INSTALLED:

Kind of pump SUBMERSIBLE (GOULDS
Turbine, centrifugal, etc.

Kind of power ELEC H.P. Rating of Motor 1½
Electric, natural gas, gasoline, etc.

Pumping Capacity 12 GPM Date pump installed: 9.20.88
Gallons per minute

WELL TEST:

Test pumping capacity 10 GPM Date Well Tested: 9.20.88
Gallons per minute

Method of Discharge Measurement ORIFICE
Weir, orifice, current meter, etc.

Static Groundwater Level 180 ft. Drawdown 120 ft.

Total Pumping Lift 280 ft. Drawdown — lbs.
(Flowing Well)

I HEREBY CERTIFY that the above statements are true to the best of my knowledge and belief.

TED & ELIZABETH COOKE
Print Well Owner's Name

9.26.89, 19
Date

Ted R. Cooke
Signature of Well Owner or Agent

P.O. BOX 973
Address

CAMVILLE, AZ 86325
City State Zip

RECEIVED SEP 29 1989 MICROFILM

DWR-55-56-2/88

ENTERED OCT 05 1989

9

STATE OF ARIZONA
DEPARTMENT OF WATER RESOURCES
99 EAST VIRGINIA AVENUE
PHOENIX, ARIZONA 85004

STATE OF ARIZONA

DEPARTMENT OF WATER RESOURCES

RECEIVED
MAY 20
WATER RESOURCES

WELL DRILLER REPORT

This report should be prepared by the driller in all detail and filed with the Department within 30 days following completion of the well.

1. Owner KAREN REHLING (Name)
2013 Mingos View Cornville, AZ 86325 (Address)

2. Lessee or Operator Floyd Matley (Name)
P.O. Box 1687 Cottonwood, AZ 86326 (Address)

3. Driller MATLEY WELL DRILLING (Name)
P.O. BOX 1687
COTTONWOOD, AZ 86326 (Address)

4. Location of well: Mingos View Estates

5. Permit No. 510223
(if issued)

DESCRIPTION OF WELL

6. Total depth of hole 310 ft.
7. Type of Casing .188 STEEL
8. Diameter and length of casing 6 in. from 0 to 310, _____ in from _____ to _____.
9. Method of sealing at reduction points Driven
10. Perforated from 270 to 290, from _____ to _____, from _____ to _____
11. Size of cuts 1/8" x 3" Number of cuts per foot 4
12. If screen was installed: Length _____ ft. Diam _____ in. Type _____
13. Method of construction Drilled
drilled, dug, driven, bored, jetted, etc.
14. Date started 5 (Month) 10 (day) 85 (year)
15. Date completed 5 (Month) 15 (day) 85 (year)
16. Depth to water 150 ft. (If flowing well, so state.)
17. Describe point from which depth measurements were made, and give sea-level elevation if available. Ground Level 3600"
18. If flowing well, state method of flow regulation _____
19. REMARKS: _____

DO NOT WRITE IN THIS SPACE
OFFICE RECORD
Registration No. 55-511024
Received _____ By _____
Entered 5. 29. 85 By J
File No. A(15-4)11 bdb

(Well log to appear on Reverse side)

MICROFILMED

DWR-55-6-5/83

LOG OF WELL

Indicate depth at which water was first encountered, and the depth and thickness of water bearing beds. If water is artesian, indicate depth at which encountered, and depth to which it rose in well.

From (feet)	To (feet)	Description of formation material
0	16'	over burden
16	29	brown clay
29	97	clay ledges
97	189	lime ledges
189	268	quick sand
268	309	clay
309	312	white lime

I hereby certify that this well was drilled by me (or under my supervison), and that each and all of the statements herein contained are true to the best of my knowledge and belief.

Driller _____
Name

MATLEY WELL DRILLING
P.O. BOX 1687 Address
COTTONWOOD, AZ. 86326
City State Zip

Date 5-16-85

7

STATE OF ARIZONA
DEPARTMENT OF WATER RESOURCES
15 South 15th Avenue
Phoenix, Arizona 85007

WELL DRILLER REPORT

This report should be prepared by the driller in all detail and filed with the Department within 30 days following completion of the well.

1. Owner GEORGE BRUNORI
   Name
   HC 66 BOX 1938 Cornville AZ 86325
   Mailing Address

2. Driller Floyd Matley
   Name
   PO Box 1687 Cottonwood AZ 86326
   Mailing Address

RECEIVED JUN 30 1989 DEPT OF WATER RESOURCES

3. Location of well: Cornville

4. Permit No. 55-524609
   (If issued)

DESCRIPTION OF WELL

5. Total depth of hole 335' ft.
6. Type of casing Steel & PVC
7. Diameter and length of casing 6 in. from 0 to 40.5 in from 0 to 335.
8. Method of sealing at reduction points Cement
9. Perforated from 280 to 335 from ____ to ____, from ____ to ____.
10. Size of cuts 1/16" Number of cuts per foot 3
11. If screen was installed: Length ____ ft. Diam ____ in. Type ____
12. Method of construction ____
    rotary, drilled, dug, driven, bored, jetted, etc
13. Date started 6 (Month) 20 (Day) 89 (Year)
14. Date completed 6 (Month) 25 (Day) 89 (Year)
15. Depth to water 180' ft. (If flowing well, so state)
16. Describe point from which depth measurements were made, and give sea-level elevation if available ground level 3500 ABOVE SEA level
17. If flowing well, state method of flow regulation: ____
18. Remarks: ____

55-524609
RI A(15-4)11 bca
F
Entered ____ By ____
ENTERED JUL 05 1989

DWR-55-6-Rev. 2/89

MICROFILMED

LOG OF WELL

Indicate depth at which water was first encountered, and the depth and thickness of water bearing beds. If water is artesian, indicate depth at which encountered, and depth to which it rose in well.

From (feet)	To (feet)	Description of formation material
0	12	over Burden
12	36	Pink lime
36	54	Brown clay
54	137	Sand stone ledges
137	214	Quick sand
214	259	Pink lime
259	280	Quick sand
280	335	sand stone ledges
		1st water 320'
		Thickness 110'

I hereby certify that this well was drilled by me (or under my supervision), and that each and all statements herein contained are true to the best of my knowledge and belief.

Driller Floyd Mathy
Name

PO Box 1687
Address

Cottonwood AZ 86326
City State Zip

Date 6-27-89

DEPARTMENT OF WATER RESOURCES
15 South 15th Avenue
Phoenix, Arizona 85007

Registration No. 524609

File No. A (154) 11 bCA MAY 13 1991

COMPLETION REPORT

1. Per A.R.S. §45-600, the Completion Report is to be filed with the Department within 30 days after installation of pump equipment by the registered well owner.

2. Drawdown of the water level for a non-flowing well should be measured in feet after not less than 4 hours of continuous operation and while still in operation and for a flowing well the shut-in pressure should be measured in feet above the land or in pounds per square inch at the land surface.

3. The static groundwater level should be measured in feet from the land surface immediately prior to the well capacity test.

4. The tested pumping capacity of the well in gallons per minute for a non-flowing well should be dete[illegible] [illegible]easu[illegible] discharge [illegible] the pump after continuous operation for at least 4 [illegible]ing the natural flow at the land surface.

A 150 040 11 B C A WR 524609 CR[illegible]
BRUNORI, GEORGE
% HC 66 BOX 1938
CORNVILLE AZ 86325
12

LOCATION OF THE WE[illegible]

Township Range Section ¼ ¼ ¼

EQUIPMENT INSTALLED:

Kind of pump SUBMERSABLE
Turbine, centrifugal, etc.

Kind of power electric ~~one~~ H.P. Rating of Motor one
Electric, natural gas, gasoline, etc.

Pumping Capacity 8 Date pump installed: 1-1-90
Gallons per minute

WELL TEST:

Test pumping capacity 8 Date Well Tested: 1-1-90
Gallons per minute

Method of Discharge Measurement BUCKET
Weir, orifice, current meter, etc.

Static Groundwater Level 175 ft. Drawdown ? ft.

Total Pumping Lift 315 ft. Drawdown ? lbs.
pump depth (Flowing Well)

I HEREBY CERTIFY that the above statements are true to the best of my knowledge and belief.

GEORGE M. BRUNORI
Print Well Owner's Name

5-6-, 1991
Date

Signature of Well Owner or Agent

P.S. WELL DRILLER IS OUT OF BUSINESS — THIS IS OWNERS BEST GUESS

P.O. BOX 79
Address

CORNVILLE AZ 86325
City State Zip

DWR-55-56-2/88

MICROFILMED

ENTERED MAY 17 1991

FX. 214-969-3008

8

ARIZONA DEPARTMENT OF WATER RESOURCES

500 North Third Street
Phoenix, Arizona 85004

WELL DRILLER REPORT

This report should be prepared by the driller in all detail and filed with the Department within 30 days following completion of the well.

HOFFMAN, TIM & SUSAN

1. NAPCO DRILLING
P.O. BOX 252
CORNVILLE, AZ 86325-0252

2. Owner Name: TIM & SUSAN HOFFMAN
Address: 10512 ALLEGHENY CT DALLAS TX 75229
City State Zip

3. Location: 15 (N/S) 4 (E/W) 11 ¼ NE ¼ SW ¼ NW
Township Range Section 10-acre 40-acre 160-acre

4. Well Registration No. 55- 573828 (Required)
5. Permit No. A(15-4)11 BCA (If issued)

DESCRIPTION OF WELL

6. Total depth of hole 320 ft.
7. Type of casing STEEL .188 WALL W/ H.D. SHOE
8. Diameter and length of casing 6 in. from 1' AGL to 270', in from to
9. Method of sealing at reduction points GROUT
10. Perforated from -0- to , from to from to
11. Size of cuts -0- Number of cuts per foot
12. If screen was installed: Length -0- ft. Diam in. Type
13. Method of construction DRILLED
(drilled, dug, driven, bored, jetted, etc)
14. Date started 5 (Month) 25 (Day) 99 (Year)
15. Date completed 5 (Month) 29 (Day) 99 (Year)
16. Depth to water 210' ft. (If flowing well, so state)
17. Describe point from which depth measurements were made, and give sea-level elevation if available
GROUNDLEVEL APROX 3500'
18. If flowing well, state method of flow regulation:
19. Remarks: AIR DEVELOPED @ 15 GPM

DO NOT WRITE IN THIS SPACE
OFFICE RECORD

Registration No. 55-573828
File No. A(15-4) 11 BCA
Received By
Entered By

DWR-55-55-7/95 (Rev.)

3 2003

LOG OF WELL

Indicate depth at which water was first encountered, and the depth and thickness of water bearing beds. If water is artesian, indicate depth at which encountered, and depth to which it rose in well.

From (feet)	To (feet)	Description of formation material
0	21	TOPSOIL
21	25	LIMESTONE
25	140	CLAY & LIMESTONE
140	185	SANDSTONE w/ STREAKS CLAY
185	226	SAND
226	320	CLAY CONGLOMERATE (WATER 300')

I hereby certify that this well was drilled by me(or under my supervision), and that each and all statements herein contained are true to the best of my knowledge and belief.

Driller Name: NAPCO DRILLING

P.O. BOX 252
Street

CORNVILLE, AZ 86325-0252
City State Zip Phone No

Signature of Driller 6-4-99
Date

10

ARIZONA DEPARTMENT OF WATER RESOURCES
500 North Third Street
Phoenix, Arizona 85004
WELL DRILLER REPORT

This report should be prepared by the driller in all detail and filed with the Department within 30 days following completion of the well.

RECEIVED JUN 30 1999 RECORDS MGT

1. NAPCO DRILLING
P.O. BOX 252
CORNVILLE, AZ 86325-0252

2. Owner Name: DAN BRUNO
Address: RIMROCK (City) AZ (State) 86335 (Zip)

3. Location: 15 (N/S) (Township) 4 (E/W) (Range) 11 (Section) ¼ NW (10-acre) ¼ SE (40-acre) ¼ NW (160-acre)

4. Well Registration No. 55- 574754 (Required)
5. Permit No. A(15-4)11 BDB (If issued)

DESCRIPTION OF WELL

6. Total depth of hole 300 ft.
7. Type of casing Steel .188 wall
8. Diameter and length of casing 6 in. from 1' AGL to 200', in from to
9. Method of sealing at reduction points GROUT
10. Perforated from — to —, from — to — from — to
11. Size of cuts — Number of cuts per foot —
12. If screen was installed: Length — ft. Diam — in. Type —
13. Method of construction DRILLED (drilled, dug, driven, bored, jetted, etc)
14. Date started 6 (Month) 7 (Day) 99 (Year)
15. Date completed 6 (Month) 8 (Day) 99 (Year)
16. Depth to water 170 ft. (If flowing well, so state)
17. Describe point from which depth measurements were made, and give sea-level elevation if available
GROUND LEVEL
18. If flowing well, state method of flow regulation: N/A
19. Remarks: BAIL TESTED @ 15 GPM W/ 15' DRAWDOWN

RECEIVED JUL 1 1999

DO NOT WRITE IN THIS SPACE
OFFICE RECORD

Registration No. 55-574754
File No. A(15-4) 11 BDB
Received _____ By _____
Entered _____ By _____

DWR-55-55-7/95 (Rev.)

LOG OF WELL

Indicate depth at which water was first encountered, and the depth and thickness of water bearing beds. If water is artesian, indicate depth at which encountered, and depth to which it rose in well.

From (feet)	To (feet)	Description of formation material
0	4	LIMESTONE
4	48	SAND
48	65	CLAY - SANDSTONE
65	71	LIMESTONE
71	115	CLAY CONGLOMERATE
115	158	SANDY CLAY
158	170	SANDSTONE/CLAY
170	177	SANDY CONGLOMERATE
177	210	CLAY CONGLOMERATE (1ST WATER 185')
210	219	SANDY CONGLOMERATE
219	265	CLAY CONGLOMERATE
265	272	HARD CONGLOMERATE
272	300	CLAY CONGLOMERATE W/WATER

I hereby certify that this well was drilled by me(or under my supervision), and that each and all statements herein contained are true to the best of my knowledge and belief.

Driller Name: NAPCO DRILLING

P.O. BOX 252
Street

CORNVILLE, AZ 86325-0252 (520) 634-4978
City State Zip Phone No.

Mark S. White 6/10/99
Signature of Driller Date

ARIZONA DEPARTMENT OF WATER RESOURCES
GROUNDWATER MANAGEMENT SUPPORT SECTION

MAIL TO: P. O. BOX 458 - PHOENIX ARIZONA 85001-0458
Phone (602) 417-2470

RECEIVED JUL 12 1999 RECORDS MGT

COMPLETION REPORT
(Pump Installation Report)

A. Per A.R.S. § 45-600.B, the Completion Report is to be filed with the Department within 30 days after installation of pump equipment by the registered well owner.

B. Drawdown of the water level for a non-flowing well should be measured in feet after not less than 4 hours of continuous operations. For a flowing well the shut-in pressure should be measured in feet above the land surface or in pounds per square inch at the land surface.

C. The static groundwater level should be measured in feet from the land surface immediately prior to the capacity test.

D. The tested pumping capacity of the well in gallons per minute for a non-flowing well should be determined by measuring the discharge of the pump after continuous operation for at least 4 hours and for a flowing well be measuring the natural flow at the land surface.

E. Items 1 and 2 are available from the Notice of Intent to Drill.

F. Items 3 and 4 may be available from the driller.

1. REGISTRATION NO: 55- 574754 **FILE NO:** A(15-4)11 BDB

2. LOCATION OF THE WELL:

15 (N/S) Township; 4 (E/W) Range; 11 Section; ¼ NW 10-acre; ¼ SE 40-acre; ¼ NW 160-acre

3. EQUIPMENT INSTALLED:

Kind of pump: SUBMERSIBLE (Turbine, Submersible, Centrifugal, etc.) Kind of power: ELECTRIC (Electric, natural gas, gasoline, etc.)

H.P. Rating of Motor: 1 H.P. Pumping Capacity: 10 GPM Date Pump Installed: 6-8-99

4. WELL TEST:

Test pumping capacity: 10 GPM (Gallons per minute) Date Well Tested: 6-8-99

Method of Discharge Measurement: WEIR (Weir, orifice, current meter, etc.)

Static Groundwater Level: 170 ft. Drawdown: 15 ft.

Total Pumping Lift: 185 ft. Drawdown: — lbs (Flowing Well)

I HEREBY CERTIFY that the above statements are true to the best of my knowledge and belief.

Print Well Owner's Name	Address	City	State	Zip
DAN BRUNO	4025 A YUMA DR.	RIMROCK	AZ	86335

Signature of Well Owner	Phone Number	Date
X D. F. Bruno	520-567-5003	6-30-99

DWR 55-56 (Rev 1/99)

ANSWERED JUL 13 1999

ARIZONA DEPARTMENT OF WATER RESOURCES
Records Management Section
500 N. 3rd Street * Phoenix, Arizona 85004
(602) 417-2405 * (800) 352-8488
www.water.az.gov

Well Driller Report and Well Log

RECEIVED
JUL 22 2002
RECORDS MGT

FILE NUMBER: A(15-4) 11 BDB
WELL REGISTRATION NUMBER: 55-592887
PERMIT NUMBER (IF ISSUED):

- Review instructions prior to completing form
- This report should be prepared by the driller in detail and filed with the Department within 30 days following completion of the well.

** PLEASE PRINT CLEARLY **

SECTION 1. REGISTRY INFORMATION

Well Owner

FULL NAME OF COMPANY, ORGANIZATION OR INDIVIDUAL: HAMMONS FAMILY TRUST
MAILING ADDRESS: 105 ROSS RD
CITY / STATE / ZIP: SEDONA, AZ 86336
CONTACT PERSON NAME AND TITLE:
TELEPHONE NUMBER: 928-204-2609
FAX:

Location of Well

WELL LOCATION ADDRESS (IF KNOWN): MOUNTAIN VIEW RD

TOWNSHIP (N/S)	RANGE (E/W)	SECTION	160 ACRE	40 ACRE	10 ACRE
15 N	4 E	11	NW 1/4	SE 1/4	NW 1/4

LATITUDE: N 34° 42. 309 "N
LONGITUDE: W 111° 53. 842 "W
LAND SURFACE ELEVATION AT WELL: 3500 Feet Above Sea Level
METHOD OF LATITUDE / LONGITUDE (CHECK ONE): ☐ USGS Quad Map ☐ Conventional Survey ☒ GPS: ☐ Survey-Grade ☒ Hand-Held
COUNTY ASSESSOR'S PARCEL ID NUMBER: BOOK 407 | MAP 4 | PARCEL 034
COUNTY WHERE WELL IS LOCATED: YAVAPAI

SECTION 2. DRILLING AUTHORIZATION

Drilling Firm

NAME: NAPCO DRILLING DBA NORTHERN ARIZONA PUMP, INC.
DWR LICENSE NUMBER: 377
TELEPHONE NUMBER: 520-634-4978
FAX:

SECTION 3. WELL CONSTRUCTION DETAILS

DATE WELL CONSTRUCTION STARTED: 6-3-02
DATE WELL CONSTRUCTION COMPLETED: 6-13-02
IF FLOWING WELL, METHOD OF FLOW REGULATION: ☐ Valve ☐ Other

Drill Method

CHECK ONE
- ☐ Air Rotary
- ☐ Bored or Augered
- ☒ Cable Tool
- ☐ Dual Rotary
- ☐ Mud Rotary
- ☐ Reverse Circulation
- ☐ Driven
- ☐ Jetted
- ☐ Air Percussion / Odex Tubing
- ☐ Other (please specify)

Method of Well Development

CHECK ONE
- ☐ Airlift
- ☒ Bail
- ☐ Surge Back
- ☐ Surge Pump
- ☐ Other (please specify)

Water Level Information

STATIC WATER LEVEL: 225 Feet Below Land Surface
DATE MEASURED: 6-13-02

Method of Sealing at Reduction Points

CHECK ONE
- ☒ None
- ☐ Packed
- ☐ Swedged
- ☐ Welded
- ☐ Other (please specify)

DWR-55-55-10/01 (Rev.)

COMPLETED JUL 24 2002

Well Driller Report and Well Log

WELL REGISTRATION NUMBER
55- 592887

SECTION 5. GEOLOGIC LOG OF WELL

DEPTH FROM SURFACE FROM (feet)	TO (feet)	DESCRIPTION Describe material, grain size, color, etc.	Check (X) every interval where water was encountered
0	3	TOPSOIL & SANDY CLAY	
3	25	SANDY CLAY	
25	228	SANDY CLAY WITH STREAKS OF SANDSTONE	
228	230	SAND STONE	
230	232	SAND	X
232	238	CONGLOMERATE	
238	247	SANDSTONE	
247	350	CONGLOMERATE AND SAND STONE	X

ARIZONA DEPARTMENT OF WATER RESOURCES
Records Management Section
500 N. 3rd Street * Phoenix, Arizona 85004
(602) 417-2405 * (800) 352-8488
www.water.az.gov

Pump Installation Completion Report

RECEIVED
SEP 10 2003
Information Management

- Review instructions prior to completing form
- The registered well owner should file this report with the Department within 30 days following installation of pump equipment

** PLEASE PRINT CLEARLY **

FILE NUMBER: A(15-4) 11 BDB
WELL REGISTRATION NUMBER: 55- 592887

SECTION 1. REGISTRY INFORMATION

Well Owner

FULL NAME OF COMPANY, ORGANIZATION OR INDIVIDUAL: HAMMONS FAMILY TRUST

MAILING ADDRESS: P.O. BOX 1083

CITY / STATE / ZIP: CORNVILLE, AZ 86325

CONTACT PERSON NAME AND TITLE:

TELEPHONE NUMBER: 928-204-2609

FAX:

Location of Well

WELL LOCATION ADDRESS (IF KNOWN): 1465 MOUNTAIN VIEW RD CORNVILLE

TOWNSHIP (N/S)	RANGE (E/W)	SECTION	160 ACRE	40 ACRE	10 ACRE
15 N	4 E	11	NW 1/4	SE 1/4	NW 1/4

COUNTY ASSESSOR'S PARCEL ID NUMBER (MOST RECENT)

BOOK	MAP	PARCEL
407	4	034

COUNTY WHERE WELL IS LOCATED: YAVAPAI

SECTION 2. EQUIPMENT INSTALLED

DATE PUMP INSTALLED:

Pump Type
CHECK ONE

- [ ] Air Lift
- [ ] Bucket
- [ ] Centrifugal
- [ ] Jet
- [ ] Piston
- [ ] Rotary
- [x] Submersible
- [ ] Turbine
- [ ] Other (please specify)

Power Type
CHECK ONE

- [ ] Diesel Engine
- [x] Electric Motor
- [ ] Gasoline Engine
- [ ] Hand
- [ ] Natural Gas
- [ ] Windmill
- [ ] Other (please specify)

RATED PUMP CAPACITY: 12 Gallons Per Minute

HORSE POWER RATING OF MOTOR: 1 1/2

SECTION 3. WELL TEST

Pump Test Data

DATE WELL TESTED: 7-1-03

STATIC WATER LEVEL (A): 225 Feet Below Land Surface

PUMPING WATER LEVEL (B): 257 Feet Below Land Surface

DRAWDOWN [(B) - (A)]: 32

TEST PUMPING RATE: 12 Gallons Per Minute

DURATION OF PUMP TEST (Minimum 4 Hours): 4 Hours

TOTAL PUMPING LIFT: 257 Feet

FOR FLOWING WELL, MEASURED SHUT IN HEAD: [ ] FT [ ] PSI

Method of Discharge Measurement
CHECK ONE

- [ ] Bailer
- [x] Bucket - Barrel - Stopwatch
- [ ] Current
- [ ] Estimated - Air Lift
- [ ] Gauge
- [ ] Meter
- [ ] Orifice
- [ ] Volume
- [ ] Weir - Flume
- [ ] Other (please specify)

Method of Measuring Water Level
CHECK ONE

- [ ] Air Line
- [x] Electric Measuring Line (Sounder)
- [ ] Steel Tape
- [ ] Other (please specify)

I HEREBY CERTIFY that the above statements are true to the best of my knowledge and belief according to A.R.S § 45-600(B)

SIGNATURE OF WELL OWNER: [signature]

DATE: 9/5/03

DWR-55-56 (Rev. 10/11/01)

12

STATE OF ARIZONA

DEPARTMENT OF
WATER RESOURCES

WELL DRILLER REPORT

This report should be prepared by the driller in all detail and filed with the Department within 30 days following completion of the well.

1. Owner Don Isby
Name
P.O. Box 1718 Cottonwood, Az 86326
Address

2. Lessee or Operator Samey
Name
Address

3. Driller Mathews Well Dr
Name
Rt 4 Box 1315 Cottonwood, Az 86326
Address

4. Location of well: 2 Miles East Casy Corner Cornwall

5. Permit No. 55-500436
(if issued)

DESCRIPTION OF WELL

6. Total depth of hole 373 ft.
7. Type of Casing steel + PVC
8. Diameter and length of casing 6" in. from 0 to 20, Steel in from PVC to 373' 40 pur
9. Method of sealing at reduction points well - glue + clamp
10. Perforated from 40 to Bottom from ____ to ____, from ____ to ____
11. Size of cuts Standard Number of cuts per foot ____
12. If screen was installed: Length — ft. Diam — in. Type ____
13. Method of construction ____
drilled, dug, driven, bored, jetted, etc.
14. Date started June 81
Month day year
15. Date completed 81
Month day year
16. Depth to water 58' ft. (If flowing well, so state.)
17. Describe point from which depth measurements were made, and give sea-level elevation if available. —
18. If flowing well, state method of flow regulation ____
19. REMARKS:
Cement + Gravel

DO NOT WRITE IN THIS SPACE
OFFICE RECORD
Registration No. 55-500436
Received ____ By ____
Entered ____ By ____
File No. A(15-4)11bbb

MICROFILMED

(Well log to appear on reverse side)

SEP 1981
DEPARTMENT OF
WATER RESOURCES

LOG OF WELL

Indicate depth at which water was first encountered, and the depth and thickness of water bearing beds. If water is artesian, indicate depth at which encountered, and depth to which it rose in well.

FROM (FEET)	TO (FEET)	DESCRIPTION OF FORMATION MATERIAL
0	28	Overburden
28	43	Pink + White lime
43	103	" " " + Clay
103	118	" " "
118	163	" " " + "
163	178	" " " + "
178	193	Malopia + lime
193	208	White + pink lime + Clay
208	223	Malopia + pink lime
223	253	" + Clay
253	283	Sandstone + Clay
283	328	Conglomerate + Sandstone
328	373	White + pink lime + Clay

I hereby certify that this well was drilled by me (or under my supervision), and that each and all of the statements herein contained are true to the best of my knowledge and belief.

Driller Matley
Name

Same
Address

Date Aug 1981

2-73

DEPARTMENT OF WATER RESOURCES
OCT 1981

DEPARTMENT OF WATER RESOURCES
East Virginia - Suite 100
Phoenix, Arizona 85004

Registration No. 55-500436
Owner of
Well Site Don Irby
File No. A(15-4)11bbb

COMPLETION REPORT

1. A Completion Report is to be filed with the Department within 30 days after installation of pump equipment.

2. The tested pumping capacity of the well in gallons per minute for a non-flowing well should be determined by measuring the discharge of the pump after continuous operation for at least four hours and for a flowing well by measuring the natural flow at the land surface.

3. Drawdown of the water level for a non-flowing well should be measured in feet after not less than four hours of continuous operation and while still in operation and for a flowing well the shutin pressure should be measured in feet above the land or in pounds per square inch at the land surface.

4. The static groundwater level should be measured in feet from the surface immediately prior to the well capacity test.

LOCATION OF THE WELL:
Cornville, Az.

Date well completed July 1981 Depth of well 330'

1. Well Test:

Test pumping capacity 20 (Gallons per minute) Date well tested 10-9-81

Method of discharge measurement orifice (Weir, orifice, current meter, et cetera)

Static groundwater level 95' Feet drawdown 35' feet

Total pumping lift 294' Feet drawdown _____ (flowing well) pounds

2. Equipment Installed:

Kind of pump Submersible (Turbine, centrifugal, et cetera)

Kind of power Electric (Electric, natural gas, et cetera) Horse power rating of motor 1 1/2

I HEREBY CERTIFY that the above statements are true to the best of my knowledge and belief.

MICROFILMED

Brad Schotanus
Signature

[illegible] N. MAIN ST.
Address

10-12, 19 81 Cottonwood, Az. 86326
Date City State Zip

ARIZONA DEPARTMENT OF WATER RESOURCES
500 North Third Street
Phoenix, Arizona 85004

RECEIVED
OCT 18 1995
RECORDS MGT

13

WELL DRILLER REPORT

This report should be prepared by the driller in all detail and filed with the Department within 30 days following completion of the well.

1. Owner Name: Albert Moss
   Address: P.O. Box 188 (Street) Cornville (City) Az (State) 86325-0188 (Zip)

2. Driller Name: Simmons Drilling
   Address: P.O. Box 2011 (Street) Cottonwood (City) Az (State) 86326 (Zip)

3. Location: 15 (N/S) (Township) 4 (E/W) (Range) 11 (Section) ¼ NW (10-acre) ¼ NW (40-acre) ¼ NW (160-acre)

4. Well Registration No. 55- 551550 (Required)

5. Permit No. _____ (If issued)

DESCRIPTION OF WELL

6. Total depth of hole 315 ft.
7. Type of casing 6" STEEL
8. Diameter and length of casing 6 in. from 0' to 285' in from _____ to _____
9. Method of sealing at reduction points —
10. Perforated from — to — from _____ to _____ from _____ to _____
11. Size of cuts — Number of cuts per foot _____
12. If screen was installed: Length _____ ft. Diam _____ in. Type _____
13. Method of construction Drilled (drilled, dug, driven, bored, jetted, etc)
14. Date started 9 - 10 - 1995 (Month Day Year)
15. Date completed 9 - 18 - 1995 (Month Day Year)
16. Depth to water 190 ft. (If flowing well, so state)
17. Describe point from which depth measurements were made, and give sea-level elevation if available
    310'
18. If flowing well, state method of flow regulation: _____
19. Remarks: _____

DO NOT WRITE IN THIS SPACE
OFFICE RECORD

Registration No. 55-551550
File No. A(15-4)11BBB
Received _____ By _____
Entered ENTERED OCT 18 1995 By _____

DWR-55-55-7/95 (Rev.)

LOG OF WELL

Indicate depth at which water was first encountered, and the depth and thickness of water bearing beds. If water is artesian, indicate depth at which encountered, and depth to which it rose in well.

From (feet)	To (feet)	Description of formation material
0	3	Silty Top Soil
3	22	Limestone w/ streaks of clay
22	210	Red Sand &
210	220	Tan Sandstone
220	250	Hard Red Sandstone
250	270	Tan Sandstone
270	290	Red Clay
290	315	Tan ~~Sand~~stone
		1st water: 220' 5 GPM
		cased off (5' thick)
		2nd water: 310' 25+ GPM
		(5' thick)

I hereby certify that this well was drilled by me(or under my supervision), and that each and all statements herein contained are true to the best of my knowledge and belief.

Driller Name: Simmons Drilling

P.O. Box 2011

Street

Cottonwood, Az 86326 634-4163

City State Zip Phone No.

William Simmons 10-14-95

Signature of Driller Date

ARIZONA DEPARTMENT OF WATER RESOURCES
500 North Third Street
Phoenix, Arizona 85004

Registration No. 55-551550
File No. A(15-4)11BBB

RECEIVED OCT 18 1995 RECORDS MGT

COMPLETION REPORT

1. Per A.R.S. § 45-600, the Completion Report is to be filed with the Department within 30 days after installation of pump equipment by the registered well owner.

2. Drawdown of the water level for a non-flowing well should be measured in feet after not less than 4 hours of continuous operation and while still in operation and for a flowing well the shut-in pressure should be measured in feet above the land or in pounds per square inch at the land surface.

3. The static groundwater level should be measured in feet from the land surface immediately prior to the well capacity test.

4. The tested pumping capacity of the well in gallons per minute for a non-flowing well should be determined by measuring the discharge of the pump after continuous operation for at least 4 hours and for a flowing well by measuring the natural flow at the land surface.

LOCATION OF THE WELL:

15 (N/S)	4 (E/W)	11	¼ NW	¼ NW	¼ NW
Township	Range	Section	10-acre	40-acre	160-acre

EQUIPMENT INSTALLED:

Kind of pump: Submersible
Turbine, centrifugal, etc.

Kind of power: Electric
Electric, natural gas, gasoline, etc.

H.P. Rating of Motor: 1 horse

Pumping Capacity: 12 GPM

Date Pump Installed: 9-18-95

WELL TEST:

Test pumping capacity: 25 GPM
Gallons per minute

Date Well Tested: 9-17-95

Method of Discharge Measurement: horizontal flow method
Weir, orifice, current meter, etc.

Static Groundwater Level: 190 ft. Drawdown: 240' ft.

Total Pumping Lift: 240' ft. Drawdown: 240' lbs.

(Flowing Well)

ENTERED OCT 18 1995

I HEREBY CERTIFY that the above statements are true to the best of my knowledge and belief.

Print Well Owner's Name

9-28, 1995
Date

Albert E. Moss
Signature of Well Owner or Agent

ALBERT E MOSS
11555 E. Ridgeroad Drive
Address
PO Box 188 Cornville Az 86325

City State Zip

DWR-

55-56-10/94 (Rev.)

14

STATE OF ARIZONA
DEPARTMENT OF WATER RESOURCES
99 EAST VIRGINIA AVENUE
PHOENIX, ARIZONA 85004

TATE OF ARIZONA

DEPARTMENT OF
WATER RESOURCES

WELL DRILLER REPORT

his report should be prepared by the driller in all detail and filed with the Department ithin 30 days following completion of the well.

1. Owner Philip Brownscombe
Name
Rt 3 Box 119 Cottonwood, Az 86326
Address

2. Lessee or Operator
Name
Address

3. Driller Campbell Drilling Inc.
Name
P.O. Box 933 Winslow Az 85358.
Address

4. Location of well: 15N. 4E. 11. SW¼, NE¼, NW¼

5. Permit No. (if issued)

DESCRIPTION OF WELL

6. Total depth of hole 354 ft.
7. Type of Casing Steel.
8. Diameter and length of casing 8 in. from 0 to 20, 6 in from 0 to 354.
9. Method of sealing at reduction points
10. Perforated from 266 to 310, from 332 to 354, from to
11. Size of cuts 3/16 Number of cuts per foot 24
12. If screen was installed: Length ft. Diam in. Type
13. Method of construction Drilled.
drilled, dug, driven, bored, jetted, etc.
14. Date started 4 (Month) 18 (day) 85 (year)
15. Date completed 4 (Month) 23 (day) 85 (year)
16. Depth to water 230 ft. (If flowing well, so state.)
17. Describe point from which depth measurements were made, and give sea-level elevation if available.:
18. If flowing well, state method of flow regulation
19. REMARKS:

DO NOT WRITE IN THIS SPACE
OFFICE RECORD
Registration No. 55-510467
Received By
Entered 5-29-85 By
File No. A(15-4)11 bac

(Well log to appear on reverse side)

RECEIVED
DEC 17 1985
WATER RESOURCES

DWR-55-6-5/83

LOG OF WELL

Indicate depth at which water was first encountered, and the depth and thickness of water bearing beds. If water is artesian, indicate depth at which encountered, and depth to which it rose in well.

From (feet)	To (feet)	Description of formation material
0	125'	red, white Cliche & Sandstone
125'	275'	Brown sandy Clay.
275'	300'	More solid sandy Clay
300	354'	Mud stone -
		Water @ 230'

I hereby certify that this well was drilled by me (or under my supervison), and that each and all of the statements herein contained are true to the best of my knowledge and belief.

Driller Campbell Drilling Inc
Name

PO Box 933'
Address

Wickenburg Az 85358
City State Zip

Date 5-13-85

DEPARTMENT OF WATER RESOURCES
99 East Virginia
Phoenix, Arizona 85004

MAY 1985
DEPARTMENT OF WATER RESOURCES

Registration No. 55-510467
Owner of Well Site Brownscombe
File No. A(15-4)11 bac

COMPLETION REPORT

1. Per A.R.S. 45-600, the Completion Report to be filed with the Department within 30 days after installation of pump equipment by the registered well owner.
2. Drawdown of the water level for a non-flowing well should be measured in feet after not less than 4 hours of continuous operation and while still in operation and for a flowing well the shut-in pressure should be measured in feet above the land or in pounds per square inch at the land surface.
3. The static groundwater level should be measured in feet from the land surface immediately prior to the well capacity test.
4. The tested pumping capacity of the well in gallons per minute for a non-flowing well should be determined by measuring the discharge of the pump after continuous operation for at least 4 hours and for a flowing well by measuring the natural flow at the land surface.

LOCATION OF THE WELL:

15 N	4E	11	SW NE NW
Township	Range	Section	¼ ¼ ¼

EQUIPMENT INSTALLED:

Kind of pump Submersible
Turbine, centrifugal, etc.

Kind of power Electric H.P. Rating of Motor 1
Electric, natural gas, gasoline, etc.

Pumping Capacity ~~10~~ 15 Date installed May 21, '85
Gallons per minute

WELL TEST:

Test pumping capacity 15 Date Well Tested May 21, '85
Gallons per minute

Method of Discharge Measurement Orifice
Weir, orifice, current meter, etc.

Static Groundwater Level 220 ft. Drawdown 15 ft.

Total Pumping Lift 235 ft. Drawdown _____ lbs
(Flowing Well)

I HEREBY CERTIFY that the above statements are true to the best of my knowledge and belief.

May 23, 1985
DATE

Philip J. Brownscombe
Signature

Mail → 1143 Fir Ave (Rt 3 Box 119)
Address

Cottonwood, AZ 86326
City State Zip

MICROFILMED

DWR-55-7-3/84

5-8-5

15

STATE OF ARIZONA
DEPARTMENT OF WATER RESOURCES
99 EAST VIRGINIA AVENUE
PHOENIX, ARIZONA 85004

MAY 1988 DEPARTMENT OF WATER RESOURCES

WELL DRILLER REPORT

This report should be prepared by the driller in all detail and filed with the Department within 30 days following completion of the well.

1. Owner TERRANCE M. CARROLL
Name
P.O. BOX 1741 Cottonwood AZ 86326
Mailing Address

2. Driller Matley Well Drilling
Name Gary Matley
P. O. Box 2403
Mailing Address Cottonwood, AZ 86326

3. Location of well: Camp Verde

4. Permit No. 55-520054
(if issued)

DESCRIPTION OF WELL

5. Total depth of hole 300 ft.

6. Type of casing Steel & PVC

7. Diameter and length of casing 6 in. from 0 to 40, 5 in from 0 to 30.

8. Method of sealing at reduction points Cement

9. Perforated from 250 to 300, from ____ to ____, from ____ to ____.

10. Size of cuts 1/16" Number of cuts per foot 3

11. If screen was installed: Length ____ ft. Diam ____ in. Type ____

12. Method of construction ____
(drilled), dug, driven, bored, jetted, etc.

13. Date started 4 (Month) 15 (Day) 88 (Year)

14. Date completed 4 (Month) 20 (Day) 88 (Year)

15. Depth to water 168 ft. (If flowing well, so state.)

16. Describe point from which depth measurements were made, and give sea-level elevation if available 3,500 Above sea level

17. If flowing well, state method of flow regulation: ____

18. Remarks: ____

55-520054
(15-4)11 bac
Entered ENTERED MAY 13 1988 By ____

MICROFILMED

DWR-55-6-Rev. 8/85

LOG OF WELL

Indicate depth at which water was first encountered, and the depth and thickness of water bearing beds. If water is artesian, indicate depth at which encountered, and depth to which it rose in well.

From (feet)	To (feet)	Description of formation material
0	28	Sand & gravel
28	32	Sand Stone
32	90	Pink lime
90	150	Brow Clay
150	206	Sand stone ledges
206	230	quick Sand
230	280	white & Pink lime ledges
280	300	quick Sand
		Thickness 132
		Ft under 174

I hereby certify that this well was drilled by me (or under my supervision), and that each and all of the statements herein contained are true to the best of my knowledge and belief.

Driller [signature]
Name

Po Box 403
Address

Cottonwood AZ 86326
City State Zip

Date 6-9-88

LOT # 35 REVIEW

DEPARTMENT OF WATER RESOURCES
99 East Virginia
Phoenix, Arizona 85004

Registration 55-520054

A(15-4)11 bac

File No.____

MAY 1988 DEPARTMENT OF WATER RESOURCES

COMPLETION REPORT

1. [illegible] §45-600, the Completion Report to be filed with the Department within 30 days after installation of pump equipment by the registered well owner.
2. Drawdown of the water level for a non-flowing well should be measured in feet after not less than 4 hours of continuous operation and while still in operation and for a flowing well the shut-in pressure should be measured in feet above the land or in pounds per square inch at the land surface.
3. The static groundwater level should be measured in feet from the land surface immediately prior to the well capacity test.
4. The tested pumping capacity of the well in gallons per minute for a non-flowing well should be determined by measuring the discharge of the pump after continuous operation for at least 4 hours and for a flowing well by measuring the natural flow at the land surface.

LOCATION OF THE WELL:

15 N	4 E	11	SW - NE - NW
Township	Range	Section	¼ ¼ ¼

EQUIPMENT INSTALLED:

Kind of pump SUBMERIBLE
Turbine, centrifugal, etc.

Kind of power ELECTRIC H.P. Rating of Motor 1 1/2
Electric, natural gas, gasoline, etc.

Pumping Capacity 15 Date installed 4-25-88
Gallons per minute

WELL TEST:

Test pumping capacity 15 Date Well Tested 4-25-88
Gallons per minute

Method of Discharge Measurement ORIFICE
Weir, orifice, current meter, etc.

Static Groundwater Level 190 ft. Drawdown 30 ft.

Total Pumping Lift 220 ft. Drawdown n/a lbs
(Flowing Well)

I HEREBY CERTIFY that the above statements are true to the best of my knowledge and belief.

4-30, 1988
DATE

[illegible]
Signature

4367 Zalesky
Address

Stonewood Ck 86326
City State Zip

MICROFILMED

DWR-55-7-3/84

ENTERED MAY 24 1988

STATE OF ARIZONA
DEPARTMENT OF WATER RESOURCES
99 EAST VIRGINIA AVENUE
PHOENIX, ARIZONA 85004

16

MAY 1988
DEPARTMENT OF WATER RESOURCES

WELL DRILLER REPORT

This report should be prepared by the driller in all detail and filed with the Department within 30 days following completion of the well.

1. Owner CARL MATTSON
Name
94 ROSEMONT AVE FARMINGVILLE N.Y. 11738
Mailing Address

2. Driller NAPCO
Name
P.O. BOX 252 CORNVILLE AZ 86325
Mailing Address

3. Location of well: 15N 4E 11 SW NE NW.

4. Permit No. 55-520618
(if issued)

DESCRIPTION OF WELL

5. Total depth of hole 315' ft.

6. Type of casing 6" STEEL .188 WALL

7. Diameter and length of casing 6 in. from 1AGL to 26D, — in from — to —.

8. Method of sealing at reduction points

9. Perforated from — to ____, from ____ to ____, from ____ to ____.

10. Size of cuts — Number of cuts per foot

11. If screen was installed: Length — ft. Diam ____ in. Type

12. Method of construction DRILLED
drilled, dug, driven, bored, jetted, etc.

13. Date started 3-29-88
Month Day Year

14. Date completed 5 20 88
Month Day Year

15. Depth to water 246 ft. (If flowing well, so state.)

16. Describe point from which depth measurements were made, and give sea-level elevation if available GROUND LEVEL 3500'

17. If flowing well, state method of flow regulation: —

18. Remarks: DRAWDOWN @ 9 GPM 47'

55-520618
A(15-4)11 bac
Entered ENTERED MAY 31 1988 By

DWR-55-6-Rev. 8/85

MICROFILMED

LOG OF WELL

Indicate depth at which water was first encountered, and the depth and thickness of water bearing beds. If water is artesian, indicate depth at which encountered, and depth to which it rose in well.

From (feet)	To (feet)	Description of formation material
0	5	LIMESTONE
5	41	BROWN SOIL W/ STREAKS OF SANDSTONE
41	43	SMALL BOULDERS
43	216	CLAY W/ STREAKS OF SAND STONE
216	225	QUICK SAND (FIRST WATER)
225	231	HARD SAND STONE
231	247	QUICK W/ STREAKS OF CLAY
247	248	LIME STONE
248	257	QUICKSAND
257	264	LIMESTONE
264	276	BROWN CLAY W/ LAYERS OF LIMESTONE
276	279	GRAVEL
279	281	LIMESTONE
281	294	BROWN CLAY & RED CONGLOMERATE
294	297	LIMESTONE
297	310	BROWN CLAY
310	312	LIMESTONE
312	315	WHITE CLAY (SECOND WATER)

I hereby certify that this well was drilled by me (or under my supervision), and that each and all of the statements herein contained are true to the best of my knowledge and belief.

Driller [signature]
Name

P.O. Box 252
Address

CORNVILLE AZ 86325
City State Zip

Date 5-24-88

DEPARTMENT OF WATER RESOURCES
99 East Virginia
Phoenix, Arizona 850

Registrati 55-520618

A(15-4)11 bac

File No.__

COMPLETION REPORT

JUL 1988 DEPARTMENT OF WATER RESOURCES

1. Per A.R.S. §45-600, the Completion Report to be filed with the Department within 30 days after installation of pump equipment by the registered well owner.
2. Drawdown of the water level for a non-flowing well should be measured in feet after not less than 4 hours of continuous operation and while still in operation and for a flowing well the shut-in pressure should be measured in feet above the land or in pounds per square inch at the land surface.
3. The static groundwater level should be measured in feet from the land surface immediately prior to the well capacity test.
4. The tested pumping capacity of the well in gallons per minute for a non-flowing well should be determined by measuring the discharge of the pump after continuous operation for at least 4 hours and for a flowing well by measuring the natural flow at the land surface.

LOCATION OF THE WELL:

15N (Township) 4E (Range) 11 (Section) SW ¼ NE ¼ NW ¼

EQUIPMENT INSTALLED:

Kind of pump SUBM. (Turbine, centrifugal, etc.)

Kind of power ELECT. (Electric, natural gas, gasoline, etc.) H.P. Rating of Motor 1

Pumping Capacity 10 (Gallons per minute) Date installed 5-1-88

WELL TEST:

Test pumping capacity 10 (Gallons per minute) Date Well Tested 5-1-88

Method of Discharge Measurement WEIR (Weir, orifice, current meter, etc.)

Static Groundwater Level 210 ft. Drawdown 70 ft.

Total Pumping Lift ____ ft. Drawdown ____ lbs (Flowing Well)

I HEREBY CERTIFY that the above statements are true to the best of my knowledge and belief.

7-20, 1988
DATE

Nathan A White
Signature

P.O. Box 252
Address

Concho AZ 86325
City State Zip

MICROFILMED

ENTERED AUG 01 1988

DWR-55-7-3/84

17

ARIZONA DEPARTMENT OF WATER RESOURCES
500 North 3rd Street
Phoenix, Arizona 85004

RECEIVED
OCT 26 2001
RECORDS MGT

WELL DRILLER REPORT

This report should be prepared by the driller in all detail and filed with the Department within 30 days following completion of the well.

1. VERDE VALLEY WELL DRILLING, INC.
P.O. BOX 1160
CAMP VERDE, AZ 86322-1160

2. Owner Name: Don & Jo Page
Address: 21211 S 142 ND ST Chandler AZ 85249
City State Zip

3. Location: 15 (N/S) 4 (E/W) 11 ¼ SW ¼ NE ¼ NW
Township Range Section 10-acre 40-acre 160-acre

4. Well Registration No. 55-584880 (Required)

5. Permit No. _____ (If Issued)

DESCRIPTION OF WELL

6. Total depth of hole 402 ft.
7. Type of casing Steel
8. Diameter and length of casing 6 in. from 1 agL to 379, — in from — to —
9. Method of sealing at reduction points —
10. Perforated from — to —, from — to — from — to —
11. Size of cuts — Number of cuts per foot —
12. If screen was installed: Length — ft. Diam — in. Type —
13. Method of construction drilled
(drilled, dug, driven, bored, jetted, etc)
14. Date started 2-24-01
Month Day Year
15. Date completed 6-30-01
Month Day Year
16. Depth to water 186 ft. (If flowing well, so state)
17. Describe point from which depth measurements were made, and give sea_level elevation if availabl
18. If flowing well, state method of flow regulation:
19. Remarks: pumped @ 12 gpm with 44' of draw down

DO NOT WRITE IN THIS SPACE
OFFICE RECORD
Registration No. 55- 584880
File No. A(15-4) 11 BAC
Received _____ By _____
Entered _____ By _____

ARCHIVED OCT 30 2001

DWR-55-55-7/95 (Rev.)

LOG OF WELL

Indicate depth at which water was first encountered, and the depth and thickness of water bearing beds. If water is artesian, indicate depth at which encountered, and depth to which it rose in well.

From (feet)	To (feet)	Description of formation material
0	22	red sandy clay w/ limestone shelf
22	28	white limestone
28	65	red sandy clay w/ limestone shelf
65	95	" w/ limestone layers
95	250	Brown sandy clay / Brown sandstone
250	297	limestone / clay / water
297	316	dark sandy clay
316	377	marbled limestone / clay / water
377	402	white limestone
402		Dark brown clay

I hereby certify that this well was drilled by me (or under by supervision), and that each and all statements herein contained are true to the best of my knowledge and belief.

Driller Name: VERDE VALLEY WELL DRILLING, INC.

P.O. BOX 1160
Street

CAMP VERDE, AZ 86322-1160
City State Zip Phone No.

Signature of Driller Date 10-22-07

18

ARIZONA DEPARTMENT OF WATER RESOURCES
500 North Third Street
Phoenix, Arizona 85004

*

WELL DRILLER REPORT

This report should be prepared by the driller in all detail and filed with the Department within 30 days following completion of the well.

RECEIVED AUG 21 1998 RECORDS MGT

1. NAPCO DRILLING
P.O. BOX 252
CORNVILLE, AZ 86325-0252

2. Owner Name: DONALD SCHULTY
Address: 1331 HERMITS CIR. COTT. AZ. 86326
City State Zip

3. Location: 15 (N/S) 4 (E/W) 11 ¼ NW ¼ NE ¼ NW
Township Range Section 10-acre 40-acre 160-acre

4. Well Registration No. 55- 568661 (Required)
5. Permit No. _____ (If issued)

DESCRIPTION OF WELL

6. Total depth of hole 300 ft.
7. Type of casing STEEL .188 WALL CASING w/ H.D. SHOE
8. Diameter and length of casing 6 in. from 1' AGL to 239, _____ in from _____ to _____
9. Method of sealing at reduction points GROUT
10. Perforated from — to _____, from _____ to _____ from _____ to _____
11. Size of cuts — Number of cuts per foot _____
12. If screen was installed: Length — ft. Diam _____ in. Type _____
13. Method of construction DRILLED
(drilled, dug, driven, bored, jetted, etc)
14. Date started 6 15 98
Month Day Year
15. Date completed 6 19 98
Month Day Year
16. Depth to water 210 ft. (If flowing well, so state)
17. Describe point from which depth measurements were made, and give sea-level elevation if available
_____
18. If flowing well, state method of flow regulation: _____
19. Remarks: BAIL TEST @ 12 GPM w/ 18' DRAWDOWN.

DO NOT WRITE IN THIS SPACE
OFFICE RECORD

Registration No. 55-568661
File No. A(15-4) 11 BAB
Received _____ By _____
Entered _____ By _____
ANSWERED SEP 01 1998

DWR-55-55-7/95 (Rev.)

LOG OF WELL

Indicate depth at which water was first encountered, and the depth and thickness of water bearing beds. If water is artesian, indicate depth at which encountered, and depth to which it rose in well.

From (feet)	To (feet)	Description of formation material
0	8	LIMESTONE
8	42	SAND
42	52	LIMESTONE
52	70	SAND
70	150	SANDSTONE LEDGES
150	170	SANDSTONE LEDGES & SAND
170	300	SANDSTONE & CLAY WATER @ 250'-300'

I hereby certify that this well was drilled by me(or under my supervision), and that each and all statements herein contained are true to the best of my knowledge and belief.

Driller Name: NAPCO DRILLING

P.O. BOX 252
Street

CORNVILLE, AZ 86325-0252
City State Zip Phone No.

Signature of Driller Date

A(15-4) 11 BAB

19

*

ARIZONA DEPARTMENT OF WATER RESOURCES
500 North Third Street
Phoenix, Arizona 85004
WELL DRILLER REPORT

This report should be prepared by the driller in all detail and filed with the Department within 30 days following completion of the well.

RECEIVED SEP 18 1998 RECORDS MGT

1. NAPCO DRILLING
P.O. BOX 252
CORNVILLE, AZ 86325-0252

2. Owner Name: CYNTHIA K. PAGE
Address: COTTONWOOD (City) AZ (State) 86326 (Zip)

3. Location: 15 (N/S) (Township) 4 (E/W) (Range) 11 (Section) ¼ NW (10-acre) ¼ NE (40-acre) ¼ NW (160-acre)

4. Well Registration No. 55-568262 (Required)
5. Permit No. A (15-4) 11 BAB (If issued)

DESCRIPTION OF WELL

6. Total depth of hole 320 ft.
7. Type of casing STEEL .188 WALL WITH H.O. SHOE
8. Diameter and length of casing 6 in. from 1' AGL to 228', ____ in from ____ to ____
9. Method of sealing at reduction points GROUT
10. Perforated from — to —, from — to — from — to —
11. Size of cuts — Number of cuts per foot —
12. If screen was installed: Length — ft. Diam — in. Type —
13. Method of construction DRILLED (drilled, dug, driven, bored, jetted, etc)
14. Date started MAY (Month) 13 (Day) 98 (Year)
15. Date completed JUNE (Month) 12 (Day) 98 (Year)
16. Depth to water 190 ft. (If flowing well, so state)
17. Describe point from which depth measurements were made, and give sea-level elevation if available
GROUND LEVEL
18. If flowing well, state method of flow regulation: N/A

19. Remarks: BAIL TESTED @ 10 GPM - DRAW DOWN 52'

DO NOT WRITE IN THIS SPACE
OFFICE RECORD

Registration No. 55-568262
File No. A(15-4) 11 BAB
Received ____ By ____
Entered ____ By ____

DWR-55-55-7/95 (Rev.)

ANSWERED SEP 21 1998

LOG OF WELL

Indicate depth at which water was first encountered, and the depth and thickness of water bearing beds. If water is artesian, indicate depth at which encountered, and depth to which it rose in well.

From (feet)	To (feet)	Description of formation material
0	12	TOP SOIL
12	14	LIMESTONE
14	23	CALECHE
23	26	LIMESTONE
26	134	SANDY CLAY
134	137	LIMESTONE
137	223	SANDY CLAY
223	320	SANDY CLAY W/STREAKS OF CLAY
		CONGLOMERATE & SANDSTONE
		(223 FIRST WATER)

I hereby certify that this well was drilled by me(or under my supervision), and that each and all statements herein contained are true to the best of my knowledge and belief.

Driller Name: NAPCO DRILLING

P.O. BOX 252
Street

CORNVILLE, AZ 86325-0252 (520)634-4978
City State Zip Phone No.

Signature of Driller Date

20

ARIZONA DEPARTMENT OF WATER RESOURCES
500 North Third Street
Phoenix, Arizona 85004
WELL DRILLER REPORT

This report should be prepared by the driller in all detail and filed with the Department within 30 days following completion of the well.

RECEIVED DEC 10 1999 RECORDS MGT

1. NAPCO DRILLING DBA NORTHERN ARIZONA PUMP, INC.
P.O. BOX 252
CORNVILLE, AZ 86325-0252

2. Owner Name: WILLIAM LYNCH
Address: 1430 E. LE MARCHE AVE PHX 85022
City State Zip

3. Location: 15 (N)S 4 (E)W 11 ¼ NE ¼ NE ¼ NW
Township Range Section 10-acre 40-acre 160-acre

4. Well Registration No. 55- 577902 (Required)
5. Permit No. A (15-4) 11 BAA (If issued)

DESCRIPTION OF WELL

6. Total depth of hole 300 ft.
7. Type of casing STEEL .188 WALL W/ H.D. SHOE
8. Diameter and length of casing 6 in. from 1' AGL to 231, ____ in from ____ to ____
9. Method of sealing at reduction points GROUT
10. Perforated from 0 to ____, from ____ to ____ from ____ to ____
11. Size of cuts 0 Number of cuts per foot ____
12. If screen was installed: Length 0 ft. Diam ____ in. Type ____
13. Method of construction DRILLED
(drilled, dug, driven, bored, jetted, etc)
14. Date started 10 (Month) 24 (Day) 99 (Year)
15. Date completed 11 (Month) 20 (Day) 99 (Year)
16. Depth to water 200 ft. (If flowing well, so state)
17. Describe point from which depth measurements were made, and give sea-level elevation if available
GROUNDLEVEL TO TOP OF WATER APPROX 3430'
18. If flowing well, state method of flow regulation: ____

19. Remarks: BAIL TESTED @ 10 GPM W/ 45' DRAWDOWN

ENTERED DEC 10 1999

DO NOT WRITE IN THIS SPACE
OFFICE RECORD

Registration No. 55-577902
File No. A(15-4) 11 BAA
Received ____ By ____
Entered ____ By ____

DWR-55-55-7/95 (Rev.)

LOG OF WELL

Indicate depth at which water was first encountered, and the depth and thickness of water bearing beds. If water is artesian, indicate depth at which encountered, and depth to which it rose in well.

From (feet)	To (feet)	Description of formation material
0	10	SANDY CLAY
10	12	LIMESTONE
12	110	SANDY CLAY
110	202	SANDY CLAY W/ STREAKS OF SANDSTONE
202	203	SANDSTONE
203	230	SANDY CLAY
230	300	CLAY W/ STREAKS LIMESTONE WATER

I hereby certify that this well was drilled by me(or under my supervision), and that each and all statements herein contained are true to the best of my knowledge and belief.

Driller Name: NAPCO DRILLING DBA NORTHERN ARIZONA PUMP, INC.

P.O. BOX 252
Street

CORNVILLE, AZ 86325-0252 520-634-4978
City State Zip Phone No.

Nathan S. White
Signature of Driller Date

21

ARIZONA DEPARTMENT OF WATER RESOURCES
Records Management Section
500 N. 3rd Street * Phoenix, Arizona 85004
(602) 417-2405 * (800) 352-8488
www.water.az.gov

Well Driller Report and Well Log

RECEIVED NOV 14 2003 Information Management

FILE NUMBER: A(15-4) 11 BAA
WELL REGISTRATION NUMBER: 55-200092
PERMIT NUMBER (IF ISSUED):

- Review instructions prior to completing form
- This report should be prepared by the driller in detail and filed with the Department within 30 days following completion of the well.

** PLEASE PRINT CLEARLY **

SECTION 1. REGISTRY INFORMATION

Well Owner

FULL NAME OF COMPANY, ORGANIZATION OR INDIVIDUAL: DARRELL SCHUSTER
MAILING ADDRESS: 1285 EASTERN DR
CITY / STATE / ZIP: CORNVILLE, AZ 86325
CONTACT PERSON NAME AND TITLE:
TELEPHONE NUMBER: 520-399-9779
FAX:

Location of Well

WELL LOCATION ADDRESS (IF KNOWN): 1280 Mountain View Rd.

TOWNSHIP (N/S)	RANGE (E/W)	SECTION	160 ACRE	40 ACRE	10 ACRE
15N	04E	11	NW 1/4	NE 1/4	NE 1/4

LATITUDE: 34° 42 . 966 N
LONGITUDE: 111° 53 . 1908 W
LAND SURFACE ELEVATION AT WELL: 3429 Feet Above Sea Level
METHOD OF LATITUDE / LONGITUDE (CHECK ONE): [X] Hand-Held [X] GPS: [ ] Survey-Grade [ ] USGS Quad Map [ ] Conventional Survey
COUNTY ASSESSOR'S PARCEL ID NUMBER: BOOK 407 MAP 4 PARCEL 075
COUNTY WHERE WELL IS LOCATED: Yavapai

SECTION 2. DRILLING AUTHORIZATION

Drilling Firm

NAME: NAPCO DRILLING dba Northern Arizona Pump, Inc.
DWR LICENSE NUMBER: 377
TELEPHONE NUMBER: 928-634-4978
FAX: 928-634-1944

SECTION 3. WELL CONSTRUCTION DETAILS

DATE WELL CONSTRUCTION STARTED: 10-23-03
DATE WELL CONSTRUCTION COMPLETED: 10-27-03
IF FLOWING WELL, METHOD OF FLOW REGULATION: [ ] Valve [ ] Other

Drill Method — CHECK ONE
- [X] Air Rotary
- [ ] Bored or Augered
- [ ] Cable Tool
- [ ] Dual Rotary
- [ ] Mud Rotary
- [ ] Reverse Circulation
- [ ] Driven
- [ ] Jetted
- [ ] Air Percussion / Odex Tubing
- [ ] Other (please specify)

Method of Well Development — CHECK ONE
- [X] Airlift
- [ ] Bail
- [ ] Surge Back
- [ ] Surge Pump
- [ ] Other (please specify)

Method of Sealing at Reduction Points — CHECK ONE
- [X] None
- [ ] Packed
- [ ] Swedged
- [ ] Welded
- [ ] Other (please specify)

Water Level Information

STATIC WATER LEVEL: 170 Feet Below Land Surface
DATE MEASURED: 10-27-03

ANSWERED NOV 25 2003

DWR-55-55-10/01 (Rev.)

Well Driller Report and Well Log

55-200092

SECTION 4. WELL CONSTRUCTION DESIGN (AS BUILT) (attach additional page if needed)

Borehole			Installed Casing														
DEPTH FROM SURFACE		BOREHOLE DIAMETER (inches)	DEPTH FROM SURFACE		OUTER DIAMETER (inches)	MATERIAL TYPE (X)				PERFORATION TYPE (X)						SLOT SIZE IF ANY (inches)
FROM (feet)	TO (feet)		FROM (feet)	TO (feet)		STEEL	PVC	ABS	IF OTHER TYPE, DESCRIBE	BLANK OR NONE	WIRE WRAP	SHUTTER SCREEN	MILLS KNIFE	SLOTTED	IF OTHER TYPE, DESCRIBE	
0	20	10	0	271	6 3/8	X				X						
20	271	8														
271	315	6														

Installed Annular Material											
DEPTH FROM SURFACE		ANNULAR MATERIAL TYPE (X)								FILTER PACK		
						BENTONITE						
FROM (feet)	TO (feet)	NONE	CONCRETE	NEAT CEMENT OR CEMENT GROUT	CEMENT-BENTONITE GROUT	GROUT	CHIPS	PELLETS	IF OTHER TYPE OF ANNULAR MATERIAL, DESCRIBE	SAND	GRAVEL	SIZE
0	20					X						
20	271								Cavings & Cuttings			

ANSWERED NOV 2 5 2003

DEPTH OF BORING		DEPTH OF COMPLETED WELL	
315	Feet Below Land Surface	315	Feet Below Land Surface

DWR-55-55B-10/01 (Rev.)

Well Driller Report and Well Log

WELL REGISTRATION NUMBER
55- 200092

SECTION 5. GEOLOGIC LOG OF WELL

DEPTH FROM SURFACE FROM (feet)	TO (feet)	DESCRIPTION Describe material, grain size, color, etc.	Check (X) every interval where water was encountered
0	15	Sand	
15	28	Limestone	
28	70	Clay	
70	80	Clay Limestone	
80	130	Clay	
130	165	Sand	
165	315	Clay Conglomerate	✓

22

RECEIVED
MAY 30 1996
RECORDS MGT

ARIZONA DEPARTMENT OF WATER RESOURCES
500 North Third Street
Phoenix, Arizona 85004

WELL DRILLER REPORT

This report should be prepared by the driller in all detail and filed with the Department within 30 days following completion of the well.

1. NAPCO
PO BOX 252
CORNVILLE AZ 86325

2. Owner Name: DAVID KENNEY
Address: PO BOX 1148 (Street) CORNVILLE (City) AZ. (State) 86325 (Zip)

3. Location: 15 (N/S) (Township) 4 (E/W) (Range) 1 (Section) ¼ SW (10-acre) ¼ NW (40-acre) ¼ NW (160-acre)

4. Well Registration No. 55- 555896 (Required)

5. Permit No. A(15-4)1BBC (If issued)

DESCRIPTION OF WELL

6. Total depth of hole 380 ft.
7. Type of casing .188 WALL - STEEL WITH A DRIVE SHOE
8. Diameter and length of casing 6 in. from 1' AGL to 260', in from ____ to ____
9. Method of sealing at reduction points GROUT
10. Perforated from — to —, from — to — from — to —
11. Size of cuts — Number of cuts per foot —
12. If screen was installed: Length — ft. Diam — in. Type —
13. Method of construction DRILLED (drilled, dug, driven, bored, jetted, etc)
14. Date started 4 (Month) 10 (Day) 96 (Year)
15. Date completed 5 (Month) 14 (Day) 96 (Year)
16. Depth to water 190 ft. (If flowing well, so state)
17. Describe point from which depth measurements were made, and give sea-level elevation if available
GROUND LEVEL ~ 3500'
18. If flowing well, state method of flow regulation: —
19. Remarks: BAIL TESTED @ 36 GPM
DRAWDOWN 185'

DO NOT WRITE IN THIS SPACE
OFFICE RECORD

Registration No. 55-555896
File No. A(15-4)1 BBC
Received ____ By ____
ENTERED JUN 12 1996
Entered ____ By ____

DWR-55-55-7/95 (Rev.)

LOG OF WELL

Indicate depth at which water was first encountered, and the depth and thickness of water bearing beds. If water is artesian, indicate depth at which encountered, and depth to which it rose in well.

From (feet)	To (feet)	Description of formation material
0	5	SAND - TOPSOIL
5	35	CLAY AND SANDSTONE (SOFT)
35	50	SANDY CLAY
50	52	SANDSTONE (HARD)
52	80	SANDY CLAY
80	82	SANDSTONE (HARD)
80	85	CLAY
85	90	SAND
90	92	SANDSTONE
92	107	CLAY - BROWN
107	123	SANDSTONE
123	184	CLAY CONGLOMERATE
184	197	SANDY CLAY
197	205	SANDSTONE
205	215	SANDY CLAY (FIRST WATER)
215	219	SANDSTONE
219	270	CLAY CONGLOMERATE (SECOND WATER)
270	279	SANDSTONE
279	283	SOFT CLAY
283	295	HARD CLAY
295	370	HARD CONGLOMERATE
370	375	SOFT CLAY
375	380	HARD CONGLOMERATE

I hereby certify that this well was drilled by me(or under my supervision), and that each and all statements herein contained are true to the best of my knowledge and belief.

Driller Name: NATHAN S. WHITE

P.O. BOX 252
Street

CORNVILLE AZ 86325 (520)634-4973
City State Zip Phone No.

Nathan S. White 5-17-96
Signature of Driller Date

RECEIVED
MAY 30 1996
RECORDS MGT

STATE OF ARIZONA
DEPARTMENT OF WATER RESOURCES
GROUNDWATER MANAGEMENT SUPPORT SECTION

500 North Third Street, Phoenix, Arizona 85004-3903
Phone (602) 417-2470 Fax: (602) 417-2422

COMPLETION REPORT
(Pump Installation Report)

1. Per A.R.S. § 45-600, The completion report is to be filed with the Department within 30 days after installation of pump equipment by the registered well owner.
2. Drawdown of the water level for a non-flowing well should be measured in feet after not less than 4 hours of continuous operation. For a flowing well the shut-in presssure should be measured in feet above the land or in pounds per square inch at the land surface.
3. The static groundwater level should be measured in feet from the land surface immediately prior to the well capacity test.
4. The tested pumping capacity of the well in gallons per minute for a non-flowing well should be determined by measuring the discharge of the pump after continuous operation for at least 4 hours and for a flowing well by measuring the natural flow at the land surface.

REGISTRATION NO: 55- 555896 FILE NO: A(15-4)1BBC

LOCATION OF THE WELL:

4E	15N	1	¼ SW	¼ NW	¼ NW
Township	Range	Section	10-acre	40-acre	160-acre

EQUIPMENT INSTALLED:

Kind of Pump SUBMERSIBLE (Turbine, Submersible, Centrifugal, etc.) Kind of Power ELECTRIC (Electric, Natural Gas, Gasoline, etc.)

H.P. Rating of Motor 1½ HP Pumping Capacity 10 GPM Date Pump Installed 5/16/96

WELL TEST:

Test Pumping Capacity 10 GPM (Gallons per minute) Date Well Tested 5/16/96

Method of Discharge Measurement WEIR (Weir, orifice, current meter, bucket, etc.)

Static Groundwater Level 190 ft. Drawdown 160 ft.

Total Pumping Lift 350 ft. Drawdown — lbs. (Flowing Well)

I HEREBY CERTIFY that the above statements are true to the best of my knowledge and belief.

David B Kenney	P.O. Box 1148	Cornville	AZ	86326
Print Well Owner's Name	Address	City	State	Zip

David B Kenney	520 639-2769	5-23-96
Signature of Well Owner	Phone Number	Date

DWR 55-56 (Rev 10/95)

ENTERED JUN 12 1996

23

STATE OF ARIZONA

STATE OF ARIZONA
DEPARTMENT OF WATER RESOURCES
99 EAST VIRGINIA AVENUE
PHOENIX, ARIZONA 85004

DEPARTMENT OF
WATER RESOURCES

WELL DRILLER REPORT

This report should be prepared by the driller in all detail and filed with the Department within 30 days following completion of the well.

1. Owner Everett Stratford
Name
67 Carefree Street MVR, Flagstaff, Arizona 86001
Address

2. Lessee or Operator Same as above.
Name
Address

3. Driller Matley Well Drilling
Name
P. O. Box 691, Cottonwood, Arizona 86326
Address

4. Location of well: Twp. 15N Range 4E Sec. 1, SW¼, NW¼, NW¼.

5. Permit No. 55-509763
(if issued)

DESCRIPTION OF WELL

6. Total depth of hole 305 ft.
7. Type of Casing Steel & PVC
8. Diameter and length of casing 5" steel in. from 0' to 20', 5" PVC in from 20' to 305'.
9. Method of sealing at reduction points Cementing
10. Perforated from 250' to 305', from ____ to ____, from ____ to ____
11. Size of cuts ¼" x 6" Number of cuts per foot 4
12. If screen was installed: Length ____ ft. Diam ____ in. Type ____
13. Method of construction Drilled
drilled, dug, driven, bored, jetted, etc.
14. Date started 11 (Month) 26 (day) 84 (year)
15. Date completed 11 (Month) 27 (day) 84 (year)
16. Depth to water 173' ft. (If flowing well, so state.)
17. Describe point from which depth measurements were made, and give sea-level elevation if available.
Sea Level - 3400' (+ or -)
18. If flowing well, state method of flow regulation ____
19. REMARKS: Packers at 20' & 250'.
Approx. 10gpm at 300'.

DO NOT WRITE IN THIS SPACE
OFFICE RECORD
Registration No. 55-509763
Received ____ By ____
Entered 1-9-85 By ____
File No. A(15-4)1bbc

(Well log to appear on Reverse side)

MICROFILMED

RECEIVED JAN 7 1985 DEPT. OF WATER RESOURCES

DWR-55-6-5/83

LOG OF WELL

Indicate depth at which water was first encountered, and the depth and thickness of water bearing beds. If water is artesian, indicate depth at which encountered, and depth to which it rose in well.

From (feet)	To (feet)	Description of formation material
0	46	Brown Clay and Pink Limey Clay.
46	305	White Limestone & Brown Sand Layers.

I hereby certify that this well was drilled by me (or under my supervison), and that each and all of the statements herein contained are true to the best of my knowledge and belief.

Driller [signature]
Name

P. O. Box 691
Address

Cottonwood, Arizona 86326
City State Zip

Date 12-24-84

RECEIVED MAR 6 1985 DEPT OF WATER RESOURCES

DEPARTMENT OF WATER RESOURCES
99 East Virginia
Phoenix, Arizona 85004

Registration No. 55-509763
Owner of Well Site STRATFORD
File No. A(15-4) 1bbc

COMPLETION REPORT

1. Per A.R.S. §45-600, the Completion Report to be filed with the Department within 30 days after installation of pump equipment by the registered well owner.
2. Drawdown of the water level for a non-flowing well should be measured in feet after not less than 4 hours of continuous operation and while still in operation and for a flowing well the shut-in pressure should be measured in feet above the land or in pounds per square inch at the land surface.
3. The static groundwater level should be measured in feet from the land surface immediately prior to the well capacity test.
4. The tested pumping capacity of the well in gallons per minute for a non-flowing well should be determined by measuring the discharge of the pump after continuous operation for at least 4 hours and for a flowing well by measuring the natural flow at the land surface.

LOCATION OF THE WELL:

15 No. 4 East of Gila & Salt River, I
Township Range Section ¼ ¼ ¼

EQUIPMENT INSTALLED:

Kind of pump SUBMERSIBLE
Turbine, centrifugal, etc.

Kind of power ELECT H.P. Rating of Motor 1
Electric, natural gas, gasoline, etc.

Pumping Capacity 10 Date installed 12/12/84
Gallons per minute

Electric power to pump hook-up 2-21-85.

WELL TEST:

Test pumping capacity 10 Date Well Tested 1/26/85
Gallons per minute

Method of Discharge Measurement ORFICE
Weir, orifice, current meter, etc.

Static Groundwater Level 180 ft. Drawdown 30 ft.

Total Pumping Lift 210 ft. Drawdown _____ lbs
(Flowing Well)

I HEREBY CERTIFY that the above statements are true to the best of my knowledge and belief.

2/25/85, 1985
DATE

[signature]
Signature

67 Carefree Ave M.V.R.
Address

[illegible] AZ 86001
State Zip

3-11-85

MICROFILMED

DWR-55-7-3/84

24

ARIZONA DEPARTMENT OF WATER RESOURCES
500 North 3rd Street
Phoenix, Arizona 85004

WELL DRILLER REPORT

This report should be prepared by the driller in all detail and filed with the Department within 30 days following completion of the well.

RECEIVED JAN 14 2000 RECORDS MGT

1. VERDE VALLEY WELL DRILLING, INC.
P.O. BOX 1160
CAMP VERDE, AZ 86322-1160

2. Owner Name: Sheryl Brown
Address: PO BOX 1224 Cornville, AZ 86325
City State Zip

3. Location: 15 (N/S) 4 (E/W) 1 ¼ SW ¼ NW ¼ NW
Township Range Section 10-acre 40-acre 160-acre

4. Well Registration No. 55-577180 (Required)

5. Permit No. _____ (If Issued)

DESCRIPTION OF WELL

6. Total depth of hole 350 ft.
7. Type of casing Steel & pvc
8. Diameter and length of casing 6 in. from 1' agl to 154', 4½" in from 0 to 350
9. Method of sealing at reduction points grout
10. Perforated from 250 to 350, from — to — from — to —
11. Size of cuts 3/16 X 5 Number of cuts per foot 8
12. If screen was installed: Length — ft. Diam — in. Type —
13. Method of construction drilled
(drilled, dug, driven, bored, jetted, etc)
14. Date started 10-1-99
Month Day Year
15. Date completed 10-20-99
Month Day Year
16. Depth to water 220 ft. (If flowing well, so state)
17. Describe point from which depth measurements were made, and give sea_level elevation if availabl
18. If flowing well, state method of flow regulation: _____
19. Remarks: bailed @ 30 gpm

ENTERED JAN 18 2000

DO NOT WRITE IN THIS SPACE
OFFICE RECORD
Registration No. 55- 577180
File No. A(15-4) 1 BBC
Received _____ By _____
Entered _____ By _____

DWR-55-55-7/95 (Rev.)

LOG OF WELL

Indicate depth at which water was first encountered, and the depth and thickness of water bearing beds. If water is artesian, indicate depth at which encountered, and depth to which it rose in well.

From (feet)	To (feet)	Description of formation material
0	12	Sandy Silt
12	215	Sandy Silt w/ sandstone
215	250	Conglomerate clay
250	350	Conglomerate clay/Basalt/water

I hereby certify that this well was drilled by me (or under by supervision), and that each and all statements herein contained are true to the best of my knowledge and belief.

Driller Name: VERDE VALLEY WELL DRILLING, INC.

P.O. BOX 1160
Street

CAMP VERDE, AZ 86322-1160
City State Zip Phone No.

Signature of Driller Date

A(15-4) 1 BBC

Arizona Department of Water Resources
Records Management Section
500 N. 3rd Street ✦ Phoenix, Arizona 85004
(602) 417-2405 ✦ (800) 352-8488
www.water.az.gov

Pump Installation Completion Report

RECEIVED JUL 21 2003 Management

- Review instructions prior to completing form.
- The registered well owner should file this report with the Department within 30 days following installation of pump equipment.

FILE NUMBER

WELL REGISTRATION NUMBER 55 - 577180

** PLEASE PRINT CLEARLY **

SECTION 1. REGISTRY INFORMATION

Well Owner

FULL NAME OF COMPANY, ORGANIZATION, OR INDIVIDUAL: SHERYL L. BROWN

MAILING ADDRESS: BOX 224

CITY / STATE / ZIP CODE: COOLVILLE AZ 86325

CONTACT PERSON NAME AND TITLE: SHERYL L. BROWN OWNER

TELEPHONE NUMBER: 928.649.2711 FAX: 928.649.2711

Location of Well

WELL LOCATION ADDRESS (IF ANY): 13045 E. LEE PASTURE RD.

TOWNSHIP (N/S)	RANGE (E/W)	SECTION	160 ACRE	40 ACRE	10 ACRE
015	04E	0001	¼	¼	1.85 ¼

COUNTY ASSESSOR'S PARCEL ID NUMBER (MOST RECENT)

BOOK	MAP	PARCEL
		134-09-136025

COUNTY WHERE WELL IS LOCATED:

SECTION 2. EQUIPMENT INSTALLED

DATE PUMP INSTALLED: 10/14/2002

Pump Type CHECK ONE

- ☐ Air Lift
- ☐ Bucket
- ☐ Centrifugal
- ☐ Jet
- ☐ Piston
- ☐ Rotary
- ☒ Submersible
- ☐ Turbine
- ☐ Other (*please specify*):

Power Type CHECK ONE

- ☐ Diesel Engine
- ☒ Electric Motor
- ☐ Gasoline Engine
- ☐ Hand
- ☐ Natural Gas
- ☐ Windmill
- ☐ Other (*please specify*):

RATED PUMP CAPACITY: Gallons Per Minute

HORSE POWER RATING OF MOTOR:

SECTION 3. WELL TEST

Pump Test Data

DATE WELL TESTED: 10/20/1999

STATIC WATER LEVEL (A): 220 Feet Below Land Surface

PUMPING WATER LEVEL (B): 345 Feet Below Land Surface

DRAWDOWN [(B) – (A)]: 25' Feet Below Land Surface

TEST PUMPING RATE: 15 Gallons Per Minute

DURATION OF PUMP TEST (Minimum 4 Hours): 4 Hours

TOTAL PUMPING LIFT: 345 Feet

FOR FLOWING WELL, MEASURED SHUT IN HEAD: ☒ FT ☐ PSI

Method of Discharge Measurement CHECK ONE

- ☐ Bailer
- ☒ Bucket – Barrel – Stopwatch
- ☐ Current
- ☐ Estimated – Air Lift
- ☐ Gauge
- ☐ Meter
- ☐ Orifice
- ☐ Volume
- ☐ Weir – Flume
- ☐ Other (*please specify*):

Method of Measuring Water Level CHECK ONE

- ☐ Air Line
- ☐ Electric Measuring Line (Sounder)
- ☒ Steel Tape
- ☐ Other (*please specify*):

ANSWERED AUG 12 2003

I HEREBY CERTIFY that the above statements are true to the best of my knowledge and belief according to A.R.S. § 45-600(B).

SIGNATURE OF WELL OWNER: Sheryl L. Brown DATE: 5/1/03

25

STATE OF ARIZONA

DEPARTMENT OF
WATER RESOURCES

WELL DRILLER REPORT

This report should be prepared by the driller in all detail and filed with the Department within 30 days following completion of the well.

1. Owner PAUL ELY
Name
2464 Eaton Rapids Rd Lansing Mich.
Address

2. Lessee or Operator MATLEY WELL DRILLING
Name
P.O. BOX 1687
COTTONWOOD, AZ. 86326
Address

3. Driller MATLEY WELL DRILLING
Name
P.O. BOX 1687
COTTONWOOD, AZ. 86326
Address

4. Location of well: Cornville AZ

5. Permit No. 505246
(if issued)

DESCRIPTION OF WELL

6. Total depth of hole 370 ft.
7. Type of Casing 5" P.V.C. Sch. 160
8. Diameter and length of casing 5 in. from 0 to 370, _____ in from _____ to _____.
9. Method of sealing at reduction points Cement
10. Perforated from _____ to _____, from _____ to _____, from _____ to _____
11. Size of cuts _____ Number of cuts per foot _____
12. If screen was installed: Length _____ ft. Diam _____ in. Type _____
13. Method of construction Drilled
drilled, dug, driven, bored, jetted, etc.
14. Date started 4 (Month) 10 (day) - 83 (year)
15. Date completed 4 (Month) 15 (day) - 83 (year)
16. Depth to water 210 ft. (If flowing well, so state)
17. Describe point from which depth measurements were made, and give sea-level elevation if available. Ground Level 3800'
18. If flowing well, state method of flow regulation _____
19. REMARKS: _____

MICROFILMED

DO NOT WRITE IN THIS SPACE
OFFICE RECORD
Registration No. 55-505246
Received _____ By _____
Entered 6-17-83 By _____
File No. A(15-4)1bbb

(Well log to appear on Reverse side)

RECEIVED
JUN 16 1983
DEPT. OF
WATER RESOURCES

LOG OF WELL

Indicate depth at which water was first encountered, and the depth and thickness of water bearing beds. If water is artesian, indicate depth at which encountered, and depth to which it rose in well.

FROM (FEET)	TO (FEET)	DESCRIPTION OF FORMATION MATERIAL
0	16	Wh Lime
16	37	Red Sandstone
37	135	Quick Sand
135	160	Sand Stone Ledges
160	320	Sand Stone & Lime Ledges
320	370	Wh Lime

DECLASSIFIED

I hereby certify that this well was drilled by me (or under my supervision), and that each and all of the statements herein contained are true to the best of my knowledge and belief.

Driller Floyd Matley
Name

210 N. Main Cottonwood
Address

Date 4-30-83

2-73

DEPARTMENT OF WATER RESOURCES
99 East Virginia
Phoenix, Arizona 85004

JUN 1983
DEPARTMENT OF WATER RESOURCES

Registration No. 55-505246
Owner of Well Site ELY
File No. A(15-4)1bbb

COMPLETION REPORT

1. Completion Report to be filed with the Department within 30 days after installation of pump equipment.

2. The tested pumping capacity of the well in gallons per minute for a non-flowing well should be determined by measuring the discharge of the pump after continuous operation for at least 4 hours and for a flowing well by measuring the natural flow at the land surface.

3. Drawdown of the water level for a non-flowing well should be measured in feet after not less than 4 hours of continuous operation and while still in operation and for a flowing well the shut-in pressure should be measured in feet above the land or in pounds per square inch at the land surface.

4. The static groundwater level should be measured in feet from the land surface immediately prior to the well capacity test.

LOCATION OF THE WELL

Camville, AZ

Date Well Completed 4-15-83 Depth of Well 270

1. Well Test:
Test Pumping Capacity 15 (Gal. per min.) Date Well Tested 4-30-83

Method of Discharge Measurement Orifice (weir, orifice, current meter, etc.)

Static Groundwater Level 210 ft. Drawdown 60 ft.
Total Pumping Lift 270 ft. Drawdown _____ lbs. (Flowing Well)

2. Equipment Installed:

Kind of Pump Submersible (turbine, centrifugal, etc.)

Kind of Power Elec. (Elec., Nat. Gas, Etc.) H.P. Rating of Motor 1

I HEREBY CERTIFY that the above statements are true to the best of my knowledge and belief.

Floyd Matley
Signature
210 N. Main St
Address
Cottonwood Az 86326
City State Zip

4-30, 19 83
Date

MICROFILMED

STATE OF ARIZONA

STATE OF ARIZONA
DEPARTMENT OF WATER RESOURCES
99 EAST VIRGINIA AVENUE
PHOENIX, ARIZONA 85004

DEPARTMENT OF
WATER RESOURCES

~~30~~ 26

WELL DRILLER REPORT

This report should be prepared by the driller in all detail and filed with the Department within 30 days following completion of the well.

1. Owner Earl Slipher (Name)
627 W. Beal Road Flagstaff, AZ 86001 (Address)

2. Lessee or Operator same as above (Name)
(Address)

3. Driller Matley Well Drilling (Name)
P.O. Box 691, Cottonwood, AZ 86326 (Address)

4. Location of well: Twp. 15N Range 4E Section 1 - NE¼,NW¼,NW¼.

5. Permit No. 55 - 509945 (if issued)

DESCRIPTION OF WELL

6. Total depth of hole 380 ft.
7. Type of Casing Open hole
8. Diameter and length of casing _____ in. from _____ to _____, _____ in from _____ to _____.
9. Method of sealing at reduction points _____
10. Perforated from _____ to _____, from _____ to _____, from _____ to _____
11. Size of cuts _____ Number of cuts per foot _____
12. If screen was installed: Length _____ ft. Diam _____ in. Type _____
13. Method of construction drilled - deepened well from 300' to 380' (drilled, dug, driven, bored, jetted, etc.)
14. Date started 12 (Month) 29 (day) 1984 (year)
15. Date completed 12 (Month) 29 (day) 1984 (year)
16. Depth to water _____ ft. (If flowing well, so state.)
17. Describe point from which depth measurements were made, and give sea-level elevation if available.
Sea level - 3300' (+ or -)
18. If flowing well, state method of flow regulation _____
19. REMARKS: _____

DO NOT WRITE IN THIS SPACE
OFFICE RECORD
Registration No. 55-509945
Received _____ By _____
Entered 1-14-85 By SF
File No. A(15-4)1bba

(Well log to appear on Reverse side)

RECEIVED JAN 14 1985 DEPT. OF WATER RESOURCES

MICROFILMED

DWR-55-6-5/83

LOG OF WELL

Indicate depth at which water was first encountered, and the depth and thickness of water bearing beds. If water is artesian, indicate depth at which encountered, and depth to which it rose in well.

From (feet)	To (feet)	Description of formation material
300	345	Dolomite, sandstone & churt with clay layers.
345	380	Igneous rock material, sandstone & clay layers.
		(Water - 4gpm at 368' to 375'.)

I hereby certify that this well was drilled by me (or under my supervison), and that each and all of the statements herein contained are true to the best of my knowledge and belief.

Driller [signature]
Name

P.O. Box 691,
Address

Cottonwood AZ 86326
City State Zip

Date 1-11-85

STATE OF ARIZONA

DEPARTMENT OF
WATER RESOURCES

27

WELL DRILLER REPORT

This report should be prepared by the driller in all detail and filed with the Department within 30 days following completion of the well.

1. Owner Earl Stephen
Name
627 W. Beal Rd. Flagstaff Az 86001
Address

2. Lessee or Operator MATLEY WELL DRILLING
Name
P.O. BOX 1687
COTTONWOOD, AZ. 86326
Address

3. Driller MATLEY WELL DRILLING
Name
P.O. BOX 1687
COTTONWOOD, AZ. 86326
Address

4. Location of well: Cornville

5. Permit No. 506881
(if issued)

DESCRIPTION OF WELL

6. Total depth of hole 300 ft.

7. Type of Casing PVC. Sch # 160 5"

8. Diameter and length of casing 5 in. from 41 to 300, _____ in from _____ to _____.

9. Method of sealing at reduction points Cement

10. Perforated from 260 to 280, from _____ to _____, from _____ to _____

11. Size of cuts 1/8" x 3" Number of cuts per foot _____

12. If screen was installed: Length _____ ft. Diam _____ in. Type _____

13. Method of construction Drilled
drilled, dug, driven, bored, jetted, etc.

14. Date started 12 (Month) 27 (day) 83 (year)

15. Date completed 12 (Month) 30 (day) 83 (year) per driller - 1-19-84 .m

16. Depth to water 201 ft. (If flowing well, so state.)

17. Describe point from which depth measurements were made, and give sea-level elevation if available. Ground Level 3700'

18. If flowing well, state method of flow regulation _____

19. REMARKS: _____

DO NOT WRITE IN THIS SPACE
OFFICE RECORD
Registration No. 55-506881
Received _____ By _____
Entered 1-19-84 By gc
File No. A(15-4)3 BBA

MICROFILMED

(Well log to appear on Reverse side)

RECEIVED
JAN 16 1984
DEPT. OF
WATER RESOURCES

DWR-6 5-83

LOG OF WELL

Indicate depth at which water was first encountered, and the depth and thickness of water bearing beds. If water is artesian, indicate depth at which encountered, and depth to which it rose in well.

FROM (FEET)	TO (FEET)	DESCRIPTION OF FORMATION MATERIAL
0	8	overburden
8	29	Clay
29	56	Lime
56	91	Quick Sand
91	117	Conglomerate
117	290	Quick Sand
290	300	Lime Stone

I hereby certify that this well was drilled by me (or under my supervision), and that each and all of the statements herein contained are true to the best of my knowledge and belief.

Driller Floyd Mathy
Name

210 N. Main St.
Address

Date 1-9-84

28

STATE OF ARIZONA
DEPARTMENT OF WATER RESOURCES
99 EAST VIRGINIA AVENUE
PHOENIX, ARIZONA 85004

JUN 1988 DEPARTMENT OF WATER RESOURCES

WELL DRILLER REPORT

This report should be prepared by the driller in all detail and filed with the Department within 30 days following completion of the well.

1. Owner Jim Knok
Name
Hc 66 Box 2115 Cornville AZ 86325
Mailing Address

2. Driller Floyd Madley
Name
Po Box 1687 Cottonwood AZ 86326
Mailing Address

3. Location of well: Cornville

4. Permit No. 55-521069
(if issued)

DESCRIPTION OF WELL

5. Total depth of hole 305 ft.

6. Type of casing Steel & PVC

7. Diameter and length of casing 6 in. from 0 to 40.5 in from 0 to 300.

8. Method of sealing at reduction points Cement

9. Perforated from 280 to 300, from ____ to ____, from ____ to ____.

10. Size of cuts 1/4 Number of cuts per foot 3

11. If screen was installed: Length ____ ft. Diam ____ in. Type ____

12. Method of construction ____
drilled, dug, driven, bored, jetted, etc.

13. Date started 6 (Month) 9 (Day) 88 (Year)

14. Date completed 6 (Month) 8 (Day) 88 (Year)

15. Depth to water 160 ft. (If flowing well, so state.)

16. Describe point from which depth measurements were made, and give sea-level elevation if available 3500' ground level

17. If flowing well, state method of flow regulation: ____

18. Remarks: ____

55-521069
A(15-4)1 bba
ENTERED JUN 22 1988
Entered ____ By ____

MICROFILMED

DWR-55-6-Rev. 8/85

LOG OF WELL

Indicate depth at which water was first encountered, and the depth and thickness of water bearing beds. If water is artesian, indicate depth at which encountered, and depth to which it rose in well.

From (feet)	To (feet)	Description of formation material
0	28	OVERBURDEN
28	36	GRAVEL
36	84	CLAY & lime
84	124	Conglomerate
124	180	SAND stone
180	259	BROWN CLAY
259	305	SAND stone
		Thickness Est water 280
		135 }

I hereby certify that this well was drilled by me (or under my supervision), and that each and all of the statements herein contained are true to the best of my knowledge and belief.

Driller Lloyd Mathis
Name

PO Box 1687
Address

Cottonwood AZ 86326
City State Zip

Date 6-14-88

DEPARTMENT OF WATER RESOURCES
15 South 15th Avenue
Phoenix, Arizona 85007

29

WELL DRILLER REPORT

This report should be prepared by the driller in all detail and filed with the Department within 30 days following completion of the well.

1. Owner THOMAS ZATKALIK
Name
1914 RIO VISTA BULLHEAD CITY AZ 86442
Mailing Address

2. Driller NAPCO
Name
P.O. BOX 252 CORNVILLE AZ 86325
Mailing Address

3. Location of well: 15N 4E 1 NENWNW

4. Permit No. 528464
(If issued)

DESCRIPTION OF WELL

5. Total depth of hole 305 ft.

6. Type of casing STEEL .188 WALL w/ H. D. SHOE

7. Diameter and length of casing 6 in. from 1 ft to 241. — in from — to —.

8. Method of sealing at reduction points GROUT

9. Perforated from — to ____, from ____ to ____, from ____ to ____.

10. Size of cuts — Number of cuts per foot ____

11. If screen was installed: Length — ft. Diam ____ in. Type ____

12. Method of construction DRILLED
drilled, dug, driven, bored, jetted, etc

13. Date started 6 (Month) 15 (Day) 90 (Year)

14. Date completed 7 (Month) 9 (Day) 90 (Year)

15. Depth to water 203' ft. (If flowing well, so state)

16. Describe point from which depth measurements were made, and give sea-level elevation if available GROUND LEVEL APROX 3500'

17. If flowing well, state method of flow regulation: —

18. Remarks: DRAWDOWN @ 10 GPM 95'

DO 55-528464
A(15-4)1bba
REG. No.
File No.
Entered ENTERED JUL 18 1990 By

DWR-55-55-2/89

RECEIVED JUL 17 1990 OPERATIONS DIV.

MICROFILMED

LOG OF WELL

Indicate depth at which water was first encountered, and the depth and thickness of water bearing beds.
If water is artesian, indicate depth at which encountered, and depth to which it rose in well.

From (feet)	To (feet)	Description of formation material
0	7	TOPSOIL
7	10	LIMESTONE BOULDERS
10	15	SAND
15	18	SMALL BOULDERS
18	191	CLAY W/STREAKS OF SAND & SANDSTONE
191	240	SAND W/ STREAKS OF CLAY
240	241	CONGLOMERATE
241	252	GRAY CLAY & CONGLOMERATE (1ST WATER)
252	254	HARD CONGLOMERATE
254	280	GRAY CLAY W/STREAKS OF SOFT CONGL. (2ND WATER)
280	284	PINK CLAY & LIMESTONE
284	287	BROWN CLAY
287	292	SOFT CONGLOMERATE
292	305	BROWN CLAY
305		RIVER SAND (3RD WATER)

I hereby certify that this well was drilled by me (or under my supervision), and that each and all statements herein contained are true to the best of my knowledge and belief.

Driller [signature]
Name

P.O. Box 252
Address

CORNVILLE AZ 86325
City State Zip

Date 7-10-90

DEPARTMENT OF WATER RESOURCES
15 South 15th Avenue
Phoenix, Arizona 85007

RECEIVED
FEB - 4 1991
OPERATIONS DIV.

Registration No. 55-528464

File No. A(15-4)1bba

COMPLETION REPORT

1. Per ARS 45-600, the Completion Report is to be filed with the Department within 30 days after installation of pump equipment by the registered well owner.
2. Drawdown of the water level for a non-flowing well should be measured in feet after not less than 4 hours of continuous operation and while still in operation and for a flowing well the shut-in pressure should be measured in feet above the land or in pounds per square inch at the land surface.
3. The static groundwater level should be measured in feet from the land surface immediately prior to the well capacity test.
4. The tested pumping capacity of the well in gallons per minute for a non-flowing well should be determined by measuring the discharge of the pump after continuous operation for at least 4 hours and for a flowing well by measuring the natural flow at the land surface.

LOCATION OF THE WELL:

15 N	4 E	1	NE NW NW
Township	Range	Section	¼ ¼ ¼

EQUIPMENT INSTALLED:

Kind of pump: Submersible (Turbine, centrifugal, etc.)

Kind of power: Electric (Electric, natural gas, gasoline, etc.) H.P. Rating of Motor: 1½ HP

Pumping Capacity: 20 (Gallons per minute) Date pump installed: 7-9-90

WELL TEST:

Test pumping capacity: 20 (Gallons per minute) Date Well Tested: 7-9-90

Method of Discharge Measurement: Weir (Weir, orifice, current meter, etc.)

Static Groundwater Level: 203' ft. Drawdown: 95 ft.

Total Pumping Lift: 298 ft. Drawdown: _____ lbs. (Flowing Well)

I HEREBY CERTIFY that the above statements are true to the best of my knowledge and belief.

Tom ZATKALIK
Print Well Owner's Name

Jan 31, 1991
Date

Tom Zatkalik
Signature of Well Owner or Agent

PO Box 371
Address

Cornville AZ 86325
City State Zip

MICROFILMED

ENTERED FEB 06 1991

DWR-55-56-2/88

30

*

ARIZONA DEPARTMENT OF WATER RESOURCES
500 North Third Street
Phoenix, Arizona 85004
WELL DRILLER REPORT

This report should be prepared by the driller in all detail and filed with the Department within 30 days following completion of the well.

RECEIVED NOV - 5 1998 RECORDS MGT

1. NAPCO DRILLING
P.O. BOX 252
CORNVILLE, AZ 86325-0252

2. Owner Name: KIM S. KAVULISM
Address: MAYER (City) AZ (State) 86333 (Zip)

3. Location: 15 (Township) N/S 4 (Range) E/W 1 (Section) ¼ NE (10-acre) ¼ NW (40-acre) ¼ NW (160-acre)

4. Well Registration No. 55- 569870 (Required)
5. Permit No. A (15-4) 1 BBA (If issued)

DESCRIPTION OF WELL

6. Total depth of hole 400 ft.
7. Type of casing STEEL .188 WALL WITH HD SHOE / PVC LINER
8. Diameter and length of casing 6 in. from 1' AGL to 244', 4½ in from GL to 400' 9.
Method of sealing at reduction points GROUT
10. Perforated from 300' to 400', from – to – from – to – 11.
Size of cuts 3/16 x 4 Number of cuts per foot 12 12.
If screen was installed: Length – ft. Diam – in. Type – 13.
Method of construction DRILLED
(drilled, dug, driven, bored, jetted, etc)
14. Date started 10 (Month) 9 (Day) 98 (Year)
15. Date completed 10 (Month) 15 (Day) 98 (Year)
16. Depth to water 225 ft. (If flowing well, so state)
17. Describe point from which depth measurements were made, and give sea-level elevation if available
GROUND LEVEL ~ 3450'
18. If flowing well, state method of flow regulation: N/A

19. Remarks: AIR DEVELOPED @ 15 GPM

DO NOT WRITE IN THIS SPACE
OFFICE RECORD

Registration No. 55-569870
File No. A(15-4) 1 BBA
Received _____ By _____
Entered _____ By _____

DWR-55-55-7/95 (Rev.)

ANSWERED NOV 0 5 1998

LOG OF WELL

Indicate depth at which water was first encountered, and the depth and thickness of water bearing beds. If water is artesian, indicate depth at which encountered, and depth to which it rose in well.

From (feet)	To (feet)	Description of formation material
0	10	LIMESTONE
10	30	CLAY
30	40	LIMESTONE
40	200	SAND / SANDSTONE LEDGES
200	220	SOFT SAND
220	280	CLAY
280	295	SANDY CLAY
295	380	HARD MALAPAI CONGLOMERATE
380	400	FRACTURED CONGLOMERATE (WATER)

I hereby certify that this well was drilled by me(or under my supervision), and that each and all statements herein contained are true to the best of my knowledge and belief.

Driller Name: NAPCO DRILLING

P.O. BOX 252
Street

CORNVILLE, AZ 86325-0252 (520)634-4978
City State Zip Phone No.

Matthew A. White 10/19/98
Signature of Driller Date

Arizona Department of Water Resources
Records Management Section
500 N. 3rd Street ❖ Phoenix, Arizona 85004
(602) 417-2405 ❖ (800) 352-8488
www.water.az.gov

Well Driller Report and Well Log

31

- Review instructions prior to completing form
- This report should be prepared by the driller in detail and filed with the Department within 30 days following completion of the well.

** PLEASE PRINT CLEARLY **

RECEIVED FEB 10 2005 Information Management

FILE NUMBER
A(16-4)35 DDD
WELL REGISTRATION NUMBER
55 - 900909
PERMIT NUMBER (IF ISSUED)

SECTION 1. REGISTRY INFORMATION

Well Owner

FULL NAME OF COMPANY, ORGANIZATION, OR INDIVIDUAL: MAK, CLARA

MAILING ADDRESS: 350 SHADOW ROCK RD

CITY / STATE / ZIP CODE: SEDONA, AZ, 86336

CONTACT PERSON NAME AND TITLE:

TELEPHONE NUMBER: 928 204-1288

FAX:

Location of Well

WELL LOCATION ADDRESS (IF ANY): LEE PASTURE RD. CORNVILLE

TOWNSHIP (N/S)	RANGE (E/W)	SECTION	160 ACRE	40 ACRE	10 ACRE
16N	4E	35	SE ¼	SE ¼	SE ¼

LATITUDE: 34° 43' 1984" N

LONGITUDE: 111° 53' 345" W

LAND SURFACE ELEVATION AT WELL: 3524 Feet Above Sea Level

METHOD OF LATITUDE / LONGITUDE (CHECK ONE): ☐ USGS Quad Map ☐ Conventional Survey ☒ GPS ☐ Hand-Held ☐ Survey-Grade

COUNTY ASSESSOR'S PARCEL ID NUMBER

BOOK	MAP	PARCEL
407	33	061

COUNTY WHERE WELL IS LOCATED: YAVAPAI

SECTION 2. DRILLING AUTHORIZATION

Drilling Firm

NAME: NAPCO DRILLING dba Northern Arizona Pump, Inc.

DWR LICENSE NUMBER: 377

TELEPHONE NUMBER: 928-634-4978

FAX:

SECTION 3. WELL CONSTRUCTION DETAILS

DATE WELL CONSTRUCTION STARTED: 12-14-04

DATE WELL CONSTRUCTION COMPLETED: 1-27-05

IF FLOWING WELL, METHOD OF FLOW REGULATION: ☐ Valve ☐ Other:

Drill Method

CHECK ONE

- ☒ Air Rotary
- ☐ Bored or Augered
- ☐ Cable Tool
- ☐ Dual Rotary
- ☐ Mud Rotary
- ☐ Reverse Circulation
- ☐ Driven
- ☐ Jetted
- ☐ Air Percussion / Odex Tubing

Method of Well Development

CHECK ONE

- ☒ Airlift
- ☐ Bail
- ☐ Surge Block
- ☐ Surge Pump
- ☐ Other *(please specify)*:

Water Level Information

STATIC WATER LEVEL: 98 Feet Below Land Surface

DATE MEASURED: 1-27-05

Method of Sealing at Reduction Points

CHECK ONE

- ☒ None
- ☐ Packed
- ☐ Swedged
- ☐ Welded
- ☐ Other *(please specify)*:

ENTERED FEB 14 2005

Well Driller Report and Well Log

WELL REGISTRATION NUMBER
55 - 900909

SECTION 4. WELL CONSTRUCTION DESIGN (AS BUILT) (attach additional page if needed)

Borehole			Installed Casing														
DEPTH FROM SURFACE			DEPTH FROM SURFACE			MATERIAL TYPE (T)				PERFORATION TYPE (T)						
FROM (feet)	TO (feet)	BOREHOLE DIAMETER (inches)	FROM (feet)	TO (feet)	OUTER DIAMETER (inches)	STEEL	PVC	ABS	IF OTHER TYPE, DESCRIBE	BLANK OR NONE	WIRE WRAP	SHUTTER SCREEN	MILLS KNIFE	SLOTTED	IF OTHER TYPE, DESCRIBE	SLOT SIZE IF ANY (inches)
0	40	16	0	40	12 3/8	X				X						
40	330	12	0	330	10 3/8	X				X						
330	660	10	0	660	8 3/8	X				X						
			330	660	8 3/8	X								X		3/16

Installed Annular Material												
DEPTH FROM SURFACE		ANNULAR MATERIAL TYPE (T)								FILTER PACK		
						BENTONITE						
FROM (feet)	TO (feet)	NONE	CONCRETE	NEAT CEMENT OR CEMENT GROUT	CEMENT-BENTONITE GROUT	GROUT	CHIPS	PELLETS	IF OTHER TYPE OF ANNULAR MATERIAL, DESCRIBE	SAND	GRAVEL	SIZE
0	40		X									
40	330								CAVINGS & CUTTINGS			
330	660	X										

DEPTH OF BORING	DEPTH OF COMPLETED WELL
660 Feet Below Land Surface	660 Feet Below Land Surface

Well Driller Report and Well Log

WELL REGISTRATION NUMBER
55 - 900909

SECTION 5. GEOLOGIC LOG OF WELL

DEPTH FROM SURFACE FROM (feet)	TO (feet)	Description Describe material, grain size, color, etc.	Check (T) every interval where water was encountered (if known)
0	300	SANDY CLAY	
300	340	HARD CONGLOMERATE	X
340	400	GRAY CLAY	
400	440	CLAY CONGLOMERATE	
440	480	HARD CONGLOMERATE	
480	540	PURPLE MALAPAI	
540	666	MALAPAI CONGLOMERATE	X

Arizona Department of Water Resources
Records Management Section
500 N. 3rd Street ❖ Phoenix, Arizona 85004
(602) 417-2405 ❖ (800) 352-8488
www.water.az.gov

Pump Installation Completion Report

RECEIVED MAY 13 2005 Information Management

- Review instructions prior to completing form.
- The registered well owner should file this report with the Department within 30 days following installation of pump equipment.

FILE NUMBER: A(16-4)35 DDD
WELL REGISTRATION NUMBER: 55 - 900909

** PLEASE PRINT CLEARLY **

SECTION 1. REGISTRY INFORMATION

Well Owner

FULL NAME OF COMPANY, ORGANIZATION, OR INDIVIDUAL: MAK, CLARA

MAILING ADDRESS: 350 SHADOW ROCK Drive

CITY / STATE / ZIP CODE: SEDONA, AZ, 86336

CONTACT PERSON NAME AND TITLE: same as above

TELEPHONE NUMBER:

FAX:

Location of Well

WELL LOCATION ADDRESS (IF ANY): LEE PASTURE RD CORNVILLE

TOWNSHIP (N/S)	RANGE (E/W)	SECTION	160 ACRE	40 ACRE	10 ACRE
16N	4E	35	¼	¼	¼

COUNTY ASSESSOR'S PARCEL ID NUMBER (MOST RECENT)

BOOK	MAP	PARCEL
407	33	051

COUNTY WHERE WELL IS LOCATED: vavapai

SECTION 2. EQUIPMENT INSTALLED

DATE PUMP INSTALLED:

Pump Type
CHECK ONE

- ☐ Air Lift
- ☐ Bucket
- ☐ Centrifugal
- ☐ Jet
- ☐ Piston
- ☐ Rotary
- ☒ Submersible
- ☐ Turbine
- ☐ Other (*please specify*):

Power Type
CHECK ONE

- ☐ Diesel Engine
- ☒ Electric Motor
- ☐ Gasoline Engine
- ☐ Hand
- ☐ Natural Gas
- ☐ Windmill
- ☐ Other (*please specify*):

RATED PUMP CAPACITY: 175 Gallons Per Minute

HORSE POWER RATING OF MOTOR: 25

SECTION 3. WELL TEST

Pump Test Data

DATE WELL TESTED: 4-01-05

STATIC WATER LEVEL (A): 98 Feet Below Land Surface

PUMPING WATER LEVEL (B): 104 Feet Below Land Surface

DRAWDOWN [(B) – (A)]: 6 Feet Below Land Surface

TEST PUMPING RATE: 175 Gallons Per Minute

DURATION OF PUMP TEST (Minimum 4 Hours): 4 Hours

TOTAL PUMPING LIFT: 104 Feet

FOR FLOWING WELL, MEASURED SHUT IN HEAD: ☐ FT ☐ PSI

Method of Discharge Measurement
CHECK ONE

- ☐ Bailer
- ☒ Bucket – Barrel – Stopwatch
- ☐ Current
- ☐ Estimated – Air Lift
- ☐ Gauge
- ☐ Meter
- ☐ Orifice
- ☐ Volume
- ☐ Weir – Flume
- ☐ Other (*please specify*):

Method of Measuring Water Level
CHECK ONE

- ☐ Air Line
- ☒ Electric Measuring Line (Sounder)
- ☐ Steel Tape
- ☐ Other (*please specify*):

I HEREBY CERTIFY that the above statements are true to the best of my knowledge and belief according to A.R.S. § 45-600(B).

SIGNATURE OF WELL OWNER: Clara Y. Mak

DATE: 5-10-05

STATE OF ARIZONA

DEPARTMENT OF
WATER RESOURCES

32

WELL DRILLER REPORT

This report should be prepared by the driller in all detail and filed with the Department within 30 days following completion of the well.

1. Owner MIKE Weinberg (Name)
RT. 1 Box 2138 CORNVILLE, Az. 86325 (Address)

2. Lessee or Operator _____ (Name)
_____ (Address)

3. Driller Campbell's Drilling Inc. (Name)
P.O. Box 933 Wickenburg, Az. 85358 (Address)

4. Location of well: Twn. 16N, Rng. 4E, Sec. 35 SE¼ NE¼ NE¼

5. Permit No. _____
(if issued)

DESCRIPTION OF WELL

6. Total depth of hole 510 ft.
7. Type of Casing PVC
8. Diameter and length of casing 5 in. from 0 to 510, 8 steel in from 0 to 20.
9. Method of sealing at reduction points _____
10. Perforated from _____ to _____, from _____ to _____, from 450 to 510
11. Size of cuts ⅛" Number of cuts per foot _____
12. If screen was installed: Length _____ ft. Diam _____ in. Type _____
13. Method of construction Drilled
drilled, dug, driven, bored, jetted, etc.
14. Date started March (Month) 12 (day) 84 (year)
15. Date completed March (Month) 16 (day) 84 (year)
16. Depth to water 56 ft. (If flowing well, so state.)
17. Describe point from which depth measurements were made, and give sea-level elevation if available.
_____
18. If flowing well, state method of flow regulation _____
19. REMARKS: _____

DO NOT WRITE IN THIS SPACE
OFFICE RECORD
Registration No. 55-507423
Received _____ By _____
Entered 3-26-84 By _____
File No. A(16-4)35aad

MICROFILMED

(Well log to appear on Reverse side)

RECEIVED MAR 26 1984 DEPT. OF WATER RESOURCES

DWR-6 5-83

LOG OF WELL

Indicate depth at which water was first encountered, and the depth and thickness of water bearing beds. If water is artesian, indicate depth at which encountered, and depth to which it rose in well.

FROM (FEET)	TO (FEET)	DESCRIPTION OF FORMATION MATERIAL
0	140	Cemented Conglomerate
140	330	MALAPAI
330	385	Cemented Conglomerate
385	460	MALAPAI
460	480	Cemented Conglomerate
480	510	Red Beds

I hereby certify that this well was drilled by me (or under my supervision), and that each and all of the statements herein contained are true to the best of my knowledge and belief.

Driller Campbells Drilling Inc.
Name

Box 933 Wickenburg Az 85358
Address

Date 3-23-84

DEPARTMENT OF WATER RESOURCES
99 East Virginia
Phoenix, Arizona 85004

JAN 1986 DEPARTMENT OF WATER RESOURCES

Registration No. 55-507423
Owner of Well Site Weinberg
File No. A(16-4)35 aad

COMPLETION REPORT

1. Per A.R.S. 45-600, the Completion Report to be filed with the Department within 30 days after installation of pump equipment by the registered well owner.
2. Drawdown of the water level for a non-flowing well should be measured in feet after not less than 4 hours of continuous operation and while still in operation and for a flowing well the shut-in pressure should be measured in feet above the land or in pounds per square inch at the land surface.
3. The static groundwater level should be measured in feet from the land surface immediately prior to the well capacity test.
4. The tested pumping capacity of the well in gallons per minute for a non-flowing well should be determined by measuring the discharge of the pump after continuous operation for at least 4 hours and for a flowing well by measuring the natural flow at the land surface.

LOCATION OF THE WELL:

Depth of Well — 510 feet

TN16, RG 4E, SEC. 35 SE1/4, NE1/4 NE1/4
Township, Range, Section ¼ ¼ ¼

EQUIPMENT INSTALLED:

Kind of pump submersible
Turbine, centrifugal, etc.

Kind of power electric
Electric, natural gas, gasoline, etc.

H.P. Rating of Motor 3/4 HP

Pumping Capacity 20
Gallons per minute

Date installed 3/14/84

WELL TEST:

Test pumping capacity 20
Gallons per minute

Date Well Tested 3/19/84

Method of Discharge Measurement Flow meter
Weir, orifice, current meter, etc.

Static Groundwater Level 56 ft. Drawdown 0 ft.

Total Pumping Lift 56 ft. Drawdown 0 lbs
(Flowing Well)

I HEREBY CERTIFY that the above statements are true to the best of my knowledge and belief.

JANUARY 16, 1986
DATE

X Michael R. Weinberg
Signature

Route 1, Box 2138
Address

CORNVILLE, ARIZONA 86325
City, State, Zip

DWR-55-7-3/84

33

STATE OF ARIZONA
DEPARTMENT OF WATER RESOURCES
99 EAST VIRGINIA AVENUE
PHOENIX, ARIZONA 85004

'86 JUN 3 PM 4:44

WELL DRILLER REPORT

This report should be prepared by the driller in all detail and filed with the Department within 30 days following completion of the well.

1. Owner B V McABEE
Name
HC 66 Box 2141 Cornville Az 86325
Mailing Address

2. Driller Campbells Drilling Inc
Name
P.O. Box 933 Wickenburg Az 85358
Mailing Address

3. Location of well: T-16N R-4E S-35 NE NE NE

4. Permit No. _____
(if issued)

DESCRIPTION OF WELL

5. Total depth of hole 575 ft.

6. Type of casing STEEL PVC

7. Diameter and length of casing 8 in. from 0 to 20, 6 in from 0 to 575.

8. Method of sealing at reduction points CEMENTED

9. Perforated from 515 to 575, from ____ to ____, from ____ to ____.

10. Size of cuts 1/8" x 3" x 4 rows Number of cuts per foot 12

11. If screen was installed: Length ____ ft. Diam ____ in. Type ____

12. Method of construction DRILLED
drilled, dug, driven, bored, jetted, etc.

13. Date started 5 (Month) 29 (Day) 86 (Year)

14. Date completed 5 (Month) 31 (Day) 86 (Year)

15. Depth to water 150 ft. (If flowing well, so state.)

16. Describe point from which depth measurements were made, and give sea-level elevation if available _____

17. If flowing well, state method of flow regulation: _____

18. Remarks: _____

DO NOT WRITE IN THIS SPACE
OFFICE RECORD
Registration No. 55-513917
Received _____ By ____
Entered _____ By ____
File No. A(16-4)35 aaa

WATERSHED

ENTERED JUN 30 1986

DWR-55-6-Rev. 8/85

LOG OF WELL

Indicate depth at which water was first encountered, and the depth and thickness of water bearing beds. If water is artesian, indicate depth at which encountered, and depth to which it rose in well.

From (feet)	To (feet)	Description of formation material
0	5	DIRT + BOULDERS
5	25	LIMESTONE
25	548	CEMENTED CONGLOMERATE
548	575	RED SANDSTONE
		WATER @ 150

I hereby certify that this well was drilled by me (or under my supervision), and that each and all of the statements herein contained are true to the best of my knowledge and belief.

Driller CAMPBELLS DRILLING INC
Name

PO BOX 933
Address

WICKENBURG AZ 85358
City State Zip

Date 6-25-86

JUN 1986
DEPARTMENT OF WATER RESOURCES

DEPARTMENT OF WATER RESOURCES
99 East Virginia
Phoenix, Arizona 85004

Registration No. 55-513917

Owner of Well Site McAbee

File No. A(16-4)35 aaa

COMPLETION REPORT

1. Per A.R.S. ~~§45-600~~, the Completion Report to be filed with the Department within 30 days after installation of pump equipment by the registered well owner.
2. Drawdown of the water level for a non-flowing well should be measured in feet after not less than 4 hours of continuous operation and while still in operation and for a flowing well the shut-in pressure should be measured in feet above the land or in pounds per square inch at the land surface.
3. The static groundwater level should be measured in feet from the land surface immediately prior to the well capacity test.
4. The tested pumping capacity of the well in gallons per minute for a non-flowing well should be determined by measuring the discharge of the pump after continuous operation for at least 4 hours and for a flowing well by measuring the natural flow at the land surface.

LOCATION OF THE WELL:

16N	4E	35	NE NE NE
Township	Range	Section	¼ ¼ ¼

EQUIPMENT INSTALLED:

Kind of pump: Submersible (Turbine, centrifugal, etc.)

Kind of power: electric (Electric, natural gas, gasoline, etc.) H.P. Rating of Motor: 3/4

Pumping Capacity: 10 (Gallons per minute) Date installed: 6/3/86

WELL TEST:

Test pumping capacity: 75 (Gallons per minute) Date Well Tested: 5/31/86

Method of Discharge Measurement: weir (Weir, orifice, current meter, etc.)

Static Groundwater Level: 147 ft. Drawdown: 0 ft.

Total Pumping Lift: 147 ft. Drawdown: ——— ~~lbs~~ (Flowing Well)

I HEREBY CERTIFY that the above statements are true to the best of my knowledge and belief.

DATE June 11, 1986

Signature: Robert S Collmwood

Address: P.O. Box 1873

City: Collonwood State: AZ Zip: 86326

MICROFILMED

DWR-55-7-3/84

ENTERED JUN 16 1986

Arizona Department of Water Resources
Records Management Section
500 N. 3rd Street ❖ Phoenix, Arizona 85004
(602) 417-2405 ❖ (800) 352-8488
www.water.az.gov

Well Driller Report and Well Log

34

- Review instructions prior to completing form
- This report should be prepared by the driller in detail and filed with the Department within 30 days following completion of the well.

** PLEASE PRINT CLEARLY **

MAR 29 2005
Information Management

FILE NUMBER	A(16-4)35 AAB
WELL REGISTRATION NUMBER	55 - 901220
PERMIT NUMBER (IF ISSUED)	

SECTION 1. REGISTRY INFORMATION

Well Owner

FULL NAME OF COMPANY, ORGANIZATION, OR INDIVIDUAL: MOYER, PHILLIP

MAILING ADDRESS: P.O. BOX 1777

CITY / STATE / ZIP CODE: COTTONWOOD, AZ, 86326

CONTACT PERSON NAME AND TITLE:

TELEPHONE NUMBER: 928 300-4919

FAX:

Location of Well

WELL LOCATION ADDRESS (IF ANY): 655 N. PAGE SPRINGS RD.

TOWNSHIP (N/S)	RANGE (E/W)	SECTION	160 ACRE	40 ACRE	10 ACRE
16N	04E	35	NE ¼	NE ¼	NW ¼

LATITUDE: 34 · 1 44 · 1722 "N

LONGITUDE: 111 · 53 · 308 "W

LAND SURFACE ELEVATION AT WELL: 3520 Feet Above Sea Level

METHOD OF LATITUDE / LONGITUDE (CHECK ONE): ■ Hand-Held ☐ USGS Quad Map ☐ Conventional Survey ■ GPS ☐ Survey-Grade

COUNTY ASSESSOR'S PARCEL ID NUMBER

BOOK	MAP	PARCEL
407	33	006P

COUNTY WHERE WELL IS LOCATED: YAVAPAI

SECTION 2. DRILLING AUTHORIZATION

Drilling Firm

NAME: NAPCO DRILLING dba Northern Arizona Pump, Inc.

DWR LICENSE NUMBER: 377

TELEPHONE NUMBER: 928-634-4978

FAX:

SECTION 3. WELL CONSTRUCTION DETAILS

DATE WELL CONSTRUCTION STARTED: 1-22-04

DATE WELL CONSTRUCTION COMPLETED: 1-26-04

IF FLOWING WELL, METHOD OF FLOW REGULATION: ☐ Valve ☐ Other:

Drill Method

CHECK ONE
- ■ Air Rotary
- ☐ Bored or Augered
- ☐ Cable Tool
- ☐ Dual Rotary
- ☐ Mud Rotary
- ☐ Reverse Circulation
- ☐ Driven
- ☐ Jetted
- ☐ Air Percussion / Odex Tubing

Method of Well Development

CHECK ONE
- ■ Airlift
- ☐ Bail
- ☐ Surge Block
- ☐ Surge Pump
- ☐ Other *(please specify)*:

Water Level Information

STATIC WATER LEVEL: 122 Feet Below Land Surface

DATE MEASURED: 1-26-04

Method of Sealing at Reduction Points

CHECK ONE
- ■ None
- ☐ Packed
- ☐ Swedged
- ☐ Welded
- ☐ Other *(please specify)*:

ENTERED MAR 30 2005

Well Driller Report and Well Log

WELL REGISTRATION NUMBER
55 - 901220

SECTION 4. WELL CONSTRUCTION DESIGN (AS BUILT) (attach additional page if needed)

Borehole			Installed Casing														
DEPTH FROM SURFACE			DEPTH FROM SURFACE			MATERIAL TYPE (T)				PERFORATION TYPE (T)						
FROM (feet)	TO (feet)	BOREHOLE DIAMETER (inches)	FROM (feet)	TO (feet)	OUTER DIAMETER (inches)	STEEL	PVC	ABS	IF OTHER TYPE, DESCRIBE	BLANK OR NONE	WIRE WRAP	SHUTTER SCREEN	MILLS KNIFE	SLOTTED	IF OTHER TYPE, DESCRIBE	SLOT SIZE IF ANY (inches)
0	40	12	0	40	8 3/8	X				X						
40	350	8	0	310	6 3/8	X				X						
			310	350	6 3/8	X								X		3/16x4

Installed Annular Material												
DEPTH FROM SURFACE		ANNULAR MATERIAL TYPE (T)								FILTER PACK		
						BENTONITE						
FROM (feet)	TO (feet)	NONE	CONCRETE	NEAT CEMENT OR CEMENT GROUT	CEMENT-BENTONITE GROUT	GROUT	CHIPS	PELLETS	IF OTHER TYPE OF ANNULAR MATERIAL, DESCRIBE	SAND	GRAVEL	SIZE
0	40		X									
40	350	X										

DEPTH OF BORING	DEPTH OF COMPLETED WELL
350 Feet Below Land Surface	350 Feet Below Land Surface

Well Driller Report and Well Log

WELL REGISTRATION NUMBER
55 - 901220

SECTION 5. GEOLOGIC LOG OF WELL

DEPTH FROM SURFACE FROM (feet)	TO (feet)	Description Describe material, grain size, color, etc.	Check (✓) every interval where water was encountered (if known)
0	120	CONGLOMERATE (HARD GRAY)	
120	150	BOULDERS	
150	300	CLAY CONGLOMERATE	X
300	350	SAND STONE	X

ARIZONA DEPARTMENT OF WATER RESOURCES
Records Management Section
500 N. 3rd Street * Phoenix, Arizona 85004
(602) 417-2405 * (800) 352-8488
www.water.az.gov

Well Driller Report and Well Log

35

JUL 15 2003

FILE NUMBER: A(16-4) 25 CCC
WELL REGISTRATION NUMBER: 55-597369
PERMIT NUMBER (IF ISSUED):

- Review instructions prior to completing form
- This report should be prepared by the driller in detail and filed with the Department within 30 days following completion of the well.

** PLEASE PRINT CLEARLY **

SECTION 1. REGISTRY INFORMATION

Well Owner

FULL NAME OF COMPANY, ORGANIZATION OR INDIVIDUAL: DAN & LINDA GRANNAN
MAILING ADDRESS: 498 N PINE CLIFF DR
CITY / STATE / ZIP: FLAGSTAFF, AZ 86001
CONTACT PERSON NAME AND TITLE:
TELEPHONE NUMBER: 928-774-3687
FAX:

Location of Well

WELL LOCATION ADDRESS (IF KNOWN): 945 N. PAGE SPRINGS RD

TOWNSHIP (N/S)	RANGE (E/W)	SECTION	160 ACRE	40 ACRE	10 ACRE
16N	04E	25	SW 1/4	SW 1/4	SW 1/4

LATITUDE: 34° 44.860 "N
LONGITUDE: 111° 53.129 "W
LAND SURFACE ELEVATION AT WELL: 3575 Feet Above Sea Level
METHOD OF LATITUDE / LONGITUDE (CHECK ONE): ☒ Hand-Held ☐ USGS Quad Map ☐ Conventional Survey ☒ GPS: ☐ Survey-Grade
COUNTY ASSESSOR'S PARCEL ID NUMBER: BOOK 407 MAP 29 PARCEL 004E
COUNTY WHERE WELL IS LOCATED: YAVAPAI

SECTION 2. DRILLING AUTHORIZATION

Drilling Firm

NAME: NAPCO DRILLING dba Northern Arizona Pump, Inc.
DWR LICENSE NUMBER: 377
TELEPHONE NUMBER: 928-634-4978
FAX:

SECTION 3. WELL CONSTRUCTION DETAILS

DATE WELL CONSTRUCTION STARTED: 5-16-03
DATE WELL CONSTRUCTION COMPLETED: 5-21-03
IF FLOWING WELL, METHOD OF FLOW REGULATION: ☐ Valve ☐ Other

Drill Method

CHECK ONE
- ☒ Air Rotary
- ☐ Bored or Augered
- ☐ Cable Tool
- ☐ Dual Rotary
- ☐ Mud Rotary
- ☐ Reverse Circulation
- ☐ Driven
- ☐ Jetted
- ☐ Air Percussion / Odex Tubing
- ☐ Other (please specify)

Method of Well Development

CHECK ONE
- ☒ Airlift
- ☒ Bail
- ☐ Surge Back
- ☐ Surge Pump
- ☐ Other (please specify)

Method of Sealing at Reduction Points

CHECK ONE
- ☒ None
- ☐ Packed
- ☐ Swedged
- ☐ Welded
- ☐ Other (please specify)

Water Level Information

STATIC WATER LEVEL: 215 Feet Below Land Surface
DATE MEASURED: 5-21-03

ANSWERED JUL 21 2003

DWR-55-55-10/01 (Rev.)

Well Driller Report and Well Log

WELL REGISTRATION NUMBER
55-597369

SECTION 4. WELL CONSTRUCTION DESIGN (AS BUILT) (attach additional page if needed)

Borehole			Installed Casing													
DEPTH FROM SURFACE		BOREHOLE DIAMETER (inches)	DEPTH FROM SURFACE		OUTER DIAMETER (inches)	MATERIAL TYPE (X)				PERFORATION TYPE (X)						SLOT SIZE IF ANY (inches)
FROM (feet)	TO (feet)		FROM (feet)	TO (feet)		STEEL	PVC	ABS	IF OTHER TYPE, DESCRIBE	BLANK OR NONE	WIRE WRAP	SHUTTER SCREEN	MILLS KNIFE	SLOTTED	IF OTHER TYPE, DESCRIBE	
0	20	12	0	20	8 3/8	X				X						
20	400	8	0	300	6 3/8	X				X						
			300	400	6 3/8	X								X		3/16 x 4

Installed Annular Material											
DEPTH FROM SURFACE		ANNULAR MATERIAL TYPE (X)								FILTER PACK		
						BENTONITE						
FROM (feet)	TO (feet)	NONE	CONCRETE	NEAT CEMENT OR CEMENT GROUT	CEMENT-BENTONITE GROUT	GROUT	CHIPS	PELLETS	IF OTHER TYPE OF ANNULAR MATERIAL, DESCRIBE	SAND	GRAVEL	SIZE
0	20		X									

DEPTH OF BORING		DEPTH OF COMPLETED WELL	
400	Feet Below Land Surface	400	Feet Below Land Surface

DWR-55-55B-10/01 (Rev.)

Well Driller Report and Well Log

WELL REGISTRATION NUMBER
55- 597369

SECTION 5. GEOLOGIC LOG OF WELL

DEPTH FROM SURFACE FROM (feet)	TO (feet)	DESCRIPTION Describe material, grain size, color, etc.	Check (X) every Interval where water was encountered
0	10	TOPSOIL	
10	25	BOULDERS	
25	335	CLAY CONGLOMERATE	
335	345	SANDY CLAY	X
345	400	MALAPAI W/ STREAKS CONGLOMERAT	X

Arizona Department of Water Resources
Records Management Section
500 N. 3rd Street • Phoenix, Arizona 85004
(602) 417-2405 • (800) 352-8488
www.water.az.gov

Pump Installation Completion Report

- Review instructions prior to completing form in black or blue ink.
- The registered well owner should file this report with the Department within 30 days following installation of pump equipment.

RECEIVED JUL 23 2004

FILE NUMBER

WELL REGISTRATION NUMBER 55-597369

** PLEASE PRINT CLEARLY **

SECTION 1. REGISTRY INFORMATION

Well Owner

FULL NAME OF COMPANY, ORGANIZATION, OR INDIVIDUAL: Dan & Linda Granvan

MAILING ADDRESS: 498 N Pine Cliff Dr

CITY / STATE / ZIP CODE: Flagstaff Az

CONTACT PERSON NAME AND TITLE: Linda Granvan

TELEPHONE NUMBER: 928-774-3687

FAX:

Location of Well

WELL LOCATION ADDRESS (IF ANY): 945 N. Page Springs Rd Cornville

TOWNSHIP (N/S)	RANGE (E/W)	SECTION	160 ACRE	40 ACRE	10 ACRE
16.0	4.0	25	¼	¼	¼

COUNTY ASSESSOR'S PARCEL ID NUMBER (MOST RECENT)

BOOK	MAP	PARCEL
407	29	004E

COUNTY WHERE WELL IS LOCATED: Yavapai

SECTION 2. EQUIPMENT INSTALLED

DATE PUMP INSTALLED: 6-28-03

Pump Type
CHECK ONE

- [ ] Air Lift
- [ ] Bucket
- [ ] Centrifugal
- [ ] Jet
- [ ] Piston
- [ ] Rotary
- [x] Submersible
- [ ] Turbine
- [ ] Other (*please specify*):

Power Type
CHECK ONE

- [ ] Diesel Engine
- [x] Electric Motor
- [ ] Gasoline Engine
- [ ] Hand
- [ ] Natural Gas
- [ ] Windmill
- [ ] Other (*please specify*):

RATED PUMP CAPACITY: Gallons Per Minute

HORSE POWER RATING OF MOTOR: 2

SECTION 3. WELL TEST

Pump Test Data

DATE WELL TESTED: 6-30-03

STATIC WATER LEVEL (A): 215 Feet Below Land Surface

PUMPING WATER LEVEL (B): 237 Feet Below Land Surface

DRAWDOWN [(B) – (A)]: 12 Feet Below Land Surface

TEST PUMPING RATE: 10 Gallons Per Minute

DURATION OF PUMP TEST (Minimum 4 Hours): 4 Hours

TOTAL PUMPING LIFT: 237 Feet

FOR FLOWING WELL, MEASURED SHUT IN HEAD: [ ] FT [ ] PSI

Method of Discharge Measurement
CHECK ONE

- [ ] Bailer
- [x] Bucket – Barrel – Stopwatch
- [ ] Current
- [ ] Estimated – Air Lift
- [ ] Gauge
- [ ] Meter
- [ ] Orifice
- [ ] Volume
- [ ] Weir – Flume
- [ ] Other (*please specify*):

Method of Measuring Water Level
CHECK ONE

- [ ] Air Line
- [x] Electric Measuring Line (Sounder)
- [ ] Steel Tape
- [ ] Other (*please specify*):

ENTERED JUL 27 2004

I HEREBY CERTIFY that the above statements are true to the best of my knowledge and belief according to A.R.S. § 45-600(B).

SIGNATURE OF WELL OWNER: Linda J Granvan

DATE: 7-20-04

36

ARIZONA DEPARTMENT OF WATER RESOURCES
500 North Third Street
Phoenix, Arizona 85004
WELL DRILLER REPORT

This report should be prepared by the driller in all detail and filed with the Department within 30 days following completion of the well.

RECEIVED
OCT - 9 2002
RECORDS MGT

1. NAPCO DRILLING DBA NORTHERN ARIZONA PUMP, INC.
P.O. BOX 252
CORNVILLE, AZ 86325-0252

2. Owner Name: WM & CORALEE FLICK
Address: 825 N. PAGE SPRINGS RD CORNVILLE AZ 86325
City State Zip

3. Location: 16 (N)/S 4 (E)/W 26 ¼ SE ¼ SE ¼ SE
Township Range Section 10-acre 40-acre 160-acre

4. Well Registration No. 55- 575107 (Required)
5. Permit No. S (If issued)

DESCRIPTION OF WELL

6. Total depth of hole 700 ft.
7. Type of casing STEEL .188 WALL W/ H.D. SHOE
8. Diameter and length of casing 6 in. from 1' AGL to 101, in from to
9. Method of sealing at reduction points GROUT
10. Perforated from 0 to , from to from to
11. Size of cuts 0 Number of cuts per foot
12. If screen was installed: Length 0 ft. Diam in. Type
13. Method of construction DRILLED
(drilled, dug, driven, bored, jetted, etc)
14. Date started 12 (Month) 07 (Day) 02 (Year)
15. Date completed 12 (Month) 19 (Day) 02 (Year)
16. Depth to water 180 ft. (If flowing well, so state)
17. Describe point from which depth measurements were made, and give sea-level elevation if available
GROUND LEVEL TO TOP OF WATER
18. If flowing well, state method of flow regulation:

19. Remarks: AIR DEVELOPED @ 20 GPM

DO NOT WRITE IN THIS SPACE
OFFICE RECORD

Registration No. 55-575107
File No. A(16-4) 26 DDD
Received By
Entered By

DWR-55-55-7/95 (Rev.)

LOG OF WELL

Indicate depth at which water was first encountered, and the depth and thickness of water bearing beds. If water is artesian, indicate depth at which encountered, and depth to which it rose in well.

From (feet)	To (feet)	Description of formation material
0	15	BOULDERS
15	500	CLAY W/ STREAKS SANDSTONE
500	540	LIMESTONE
540	700	CLAY & LIMESTONE WATER

I hereby certify that this well was drilled by me(or under my supervision), and that each and all statements herein contained are true to the best of my knowledge and belief.

Driller Name: NAPCO DRILLING DBA NORTHERN ARIZONA PUMP, INC.

P.O. BOX 252
Street

CORNVILLE, AZ 86325-0252
City State Zip Phone No.

Signature of Driller Date 10-

STATE OF ARIZONA
DEPARTMENT OF WATER RESOURCES
15 South 15th Avenue
Phoenix, Arizona 85007

WELL DRILLER REPORT

This report should be prepared by the driller in all detail and filed with the Department within 30 days following completion of the well.

1. Owner LORAYNE HANCOCK
Name
P.O. Box 730 CORNVILLE AZ 86325
Mailing Address

2. Driller NAPCO
Name
P.O. Box 252 CORNVILLE AZ 86325
Mailing Address

3. Location of well: 16N 4E 26 SW NE SE

4. Permit No. 55-527356
(If issued)

DESCRIPTION OF WELL

5. Total depth of hole 300 ft.

6. Type of casing STEEL & PVC

7. Diameter and length of casing 8" in. from 0 to 20, 6" in from 0 to 240.

8. Method of sealing at reduction points CEMENT

9. Perforated from 180 to 240, from — to —, from ____ to ____.

10. Size of cuts 1/8" x 3" x 4 ROWS Number of cuts per foot 4

11. If screen was installed: Length — ft. Diam ____ in. Type ____

12. Method of construction DRILLED
drilled, dug, driven, bored, jetted, etc

13. Date started 03 (Month) 19 (Day) 90 (Year)

14. Date completed 03 (Month) 21 (Day) 90 (Year)

15. Depth to water FLOWING ft. (If flowing well, so state)

16. Describe point from which depth measurements were made, and give sea-level elevation if available ____

17. If flowing well, state method of flow regulation: OVERFLOW w/ GATE VALVE

18. Remarks: FLOWS 1/2 GPM
DRAWDOWN @ 15 GPM
190'

DO
REG. No. 55-527356
A(16-4)26dac
File No. ____
Entered ____ By ____
ENTERED APR 10 1990

RECEIVED
APR 3 1990
OPERATIONS DIV.

DOCUMENTED

DWR-55-55-2/89

LOG OF WELL

Indicate depth at which water was first encountered, and the depth and thickness of water bearing beds. If water is artesian, indicate depth at which encountered, and depth to which it rose in well.

From (feet)	To (feet)	Description of formation material
0	18	SAND & BOULDERS (1ST WATER)
18	210	CEMENTED CONGLOMERATE
210	300	CONGLOMERATE (2ND WATER)

I hereby certify that this well was drilled by me (or under my supervision), and that each and all statements herein contained are true to the best of my knowledge and belief.

Driller Nathan J White
Name

P.O. Box 252
Address

CORNVILLE AZ 86325
City State Zip

Date 3-29-90

DEPARTMENT OF WATER RESOURCES
15 South 15th Avenue
Phoenix, Arizona 85007

Registration No. 55-527356
A(16-4)26dac

File No. _____

COMPLETION REPORT

1. Per A.R.S. §45-600, the Completion Report is to be filed with the Department within 30 days after installation of pump equipment by the registered well owner.
2. Drawdown of the water level for a non-flowing well should be measured in feet after not less than 4 hours of continuous operation and while still in operation and for a flowing well the shut-in pressure should be measured in feet above the land or in pounds per square inch at the land surface.
3. The static groundwater level should be measured in feet from the land surface immediately prior to the well capacity test.
4. The tested pumping capacity of the well in gallons per minute for a non-flowing well should be determined by measuring the discharge of the pump after continuous operation for at least 4 hours and for a flowing well by measuring the natural flow at the land surface.

LOCATION OF THE WELL:

16N	4E	26	SW NE SE
Township	Range	Section	¼ ¼ ¼

EQUIPMENT INSTALLED:

Kind of pump SUBM.
Turbine, centrifugal, etc.

Kind of power ELECT. H.P. Rating of Motor 1.6
Electric, natural gas, gasoline, etc.

Pumping Capacity 25 Date pump installed: 3-24-90
Gallons per minute

WELL TEST:

Test pumping capacity 25 Date Well Tested: 3-24-90
Gallons per minute

Method of Discharge Measurement WEIR
Weir, orifice, current meter, etc.

Static Groundwater Level FLOWING ft. Drawdown 150' ft.

Total Pumping Lift 150 ft. Drawdown _____ lbs.
(Flowing Well)

I HEREBY CERTIFY that the above statements are true to the best of my knowledge and belief.

MICROFILMED

LORAYNE HANCOCK
Print Well Owner's Name

5-15-, 1990
Date

Signature of Well Owner or Agent

P.O. BOX 252
Address

CORNVILLE AZ 86325
City State Zip

MAY 7 1990

ENTERED MAY 21 1990

DWR-55-56-2/88

ARIZONA DEPARTMENT OF WATER RESOURCES
Records Management Section
500 N. 3rd Street * Phoenix, Arizona 85004
(602) 417-2405 * (800) 352-8488
www.water.az.gov

JUL 1 1 2003

Well Driller Report and Well Log

38

FILE NUMBER: A(16-4) 26 DAA
WELL REGISTRATION NUMBER: 55- 597625
PERMIT NUMBER (IF ISSUED)

- Review instructions prior to completing form
- This report should be prepared by the driller in detail and filed with the Department within 30 days following completion of the well.

** PLEASE PRINT CLEARLY **

SECTION 1. REGISTRY INFORMATION

Well Owner

FULL NAME OF COMPANY, ORGANIZATION OR INDIVIDUAL: STEVE & WENDY LIVANAVAGE

MAILING ADDRESS: PO BOX 1287

CITY / STATE / ZIP: CORNVILLE, AZ 86325

CONTACT PERSON NAME AND TITLE:

TELEPHONE NUMBER: 928-284-1475

FAX:

Location of Well

WELL LOCATION ADDRESS (IF KNOWN): 1280 N. WILLOW PT. RD, CORNVILLE

TOWNSHIP (N/S)	RANGE (E/W)	SECTION	160 ACRE	40 ACRE	10 ACRE
16N	04E	26	SE 1/4	NE 1/4	NE 1/4

LATITUDE: 34° 45. 184 -N
LONGITUDE: 111° 53. 196 -W

LAND SURFACE ELEVATION AT WELL: 3442 11 11.7 Feet Above Sea Level

METHOD OF LATITUDE / LONGITUDE (CHECK ONE): [X] Hand-Held [ ] USGS Quad Map [ ] Conventional Survey [X] GPS : [ ] Survey-Grade

COUNTY ASSESSOR'S PARCEL ID NUMBER: BOOK 407 | MAP 29 | PARCEL 013

COUNTY WHERE WELL IS LOCATED: YAVAPAI

SECTION 2. DRILLING AUTHORIZATION

Drilling Firm

NAME: NAPCO DRILLING dba Northern Arizona Pump, Inc.

DWR LICENSE NUMBER: 377

TELEPHONE NUMBER: 928-634-4978

FAX:

SECTION 3. WELL CONSTRUCTION DETAILS

DATE WELL CONSTRUCTION STARTED: 5-1-03

DATE WELL CONSTRUCTION COMPLETED: 5-7-03

IF FLOWING WELL, METHOD OF FLOW REGULATION: [ ] Valve [ ] Other

Drill Method

CHECK ONE
- [X] Air Rotary
- [ ] Bored or Augered
- [ ] Cable Tool
- [ ] Dual Rotary
- [ ] Mud Rotary
- [ ] Reverse Circulation
- [ ] Driven
- [ ] Jetted
- [ ] Air Percussion / Odex Tubing
- [ ] Other (please specify)

Method of Well Development

CHECK ONE
- [X] Airlift
- [ ] Bail
- [ ] Surge Back
- [ ] Surge Pump
- [ ] Other (please specify)

Method of Sealing at Reduction Points

CHECK ONE
- [X] None
- [ ] Packed
- [ ] Swedged
- [ ] Welded
- [ ] Other (please specify)

Water Level Information

STATIC WATER LEVEL: 25 Feet Below Land Surface

DATE MEASURED: 5-10-03

ANSWERED JUL 1 4 2003

DWR-55-55-10/01 (Rev.)

Well Driller Report and Well Log

WELL REGISTRATION NUMBER
55- 597625

SECTION 4. WELL CONSTRUCTION DESIGN (AS BUILT) (attach additional page if needed)

Borehole			Installed Casing													
DEPTH FROM SURFACE		BOREHOLE DIAMETER (inches)	DEPTH FROM SURFACE		OUTER DIAMETER (inches)	MATERIAL TYPE (X)				PERFORATION TYPE (X)						SLOT SIZE IF ANY (inches)
FROM (feet)	TO (feet)		FROM (feet)	TO (feet)		STEEL	PVC	ABS	IF OTHER TYPE, DESCRIBE	BLANK OR NONE	WIRE WRAP	SHUTTER SCREEN	MILLS KNIFE	SLOTTED	IF OTHER TYPE, DESCRIBE	
0	20	12	0	20	8 3/8	X										
20	340	8	0	340	6 1/2		X							X		3/16 x 4

Installed Annular Material											
DEPTH FROM SURFACE		ANNULAR MATERIAL TYPE (X)								FILTER PACK		
					BENTONITE							
FROM (feet)	TO (feet)	NONE	CONCRETE	NEAT CEMENT OR CEMENT GROUT	CEMENT-BENTONITE GROUT	GROUT	CHIPS	PELLETS	IF OTHER TYPE OF ANNULAR MATERIAL, DESCRIBE	SAND	GRAVEL	SIZE
0	20		X									
20	340	X										

DEPTH OF BORING		DEPTH OF COMPLETED WELL	
340	Feet Below Land Surface	340	Feet Below Land Surface

DWR-55-55B-10/01 (Rev.)

Well Driller Report and Well Log

WELL REGISTRATION NUMBER
55- 597625

SECTION 5. GEOLOGIC LOG OF WELL

DEPTH FROM SURFACE FROM (feet)	TO (feet)	DESCRIPTION Describe material, grain size, color, etc.	Check (X) every interval where water was encountered
0	20	BOULDERS	
20	290	CONGLOMERATE	
290	310	MALAPAI	
310	340	CONGLOMERATE	X

39

STATE OF ARIZONA
DEPARTMENT OF WATER RESOURCES
99 EAST VIRGINIA AVENUE
PHOENIX, ARIZONA 85004

MAY 1987
DEPARTMENT OF WATER RESOURCES

WELL DRILLER REPORT

This report should be prepared by the driller in all detail and filed with the Department within 30 days following completion of the well.

1. Owner Leonard Nawrocke
Name
HC 66 Box 2274, Camville, Az 86325
Mailing Address

2. Driller Kenny Porter
Name
Box 414, Cottonwood Az 86326
Mailing Address

3. Location of well: NW, NE, SE, 26, 16N, 4E, Yavapai

4. Permit No. (if issued) n/a

DESCRIPTION OF WELL

5. Total depth of hole 350 ft.

6. Type of casing steel

7. Diameter and length of casing 6 in. from 1' agl to 45', ____ in from ____ to ____.

8. Method of sealing at reduction points cement grout

9. Perforated from ____ to ____, from ____ to ____, from ____ to ____.

10. Size of cuts ____ Number of cuts per foot ____

11. If screen was installed: Length ____ ft. Diam ____ in. Type ____

12. Method of construction drilled
drilled, dug, driven, bored, jetted, etc.

13. Date started 4 (Month) 2 (Day) 87 (Year)

14. Date completed 4 (Month) 15 (Day) 87 (Year)

15. Depth to water 20 ft. (If flowing well, so state.)

16. Describe point from which depth measurements were made, and give sea-level elevation if available 1' agl

17. If flowing well, state method of flow regulation: ____

18. Remarks: ____

55-517383
A(16-4)26 dab
ENTERED MAY 14 1987
Entered ____ By ____

MICROFILMED

DWR-55-6-Rev. 8/85

LOG OF WELL

Indicate depth at which water was first encountered, and the depth and thickness of water bearing beds. If water is artesian, indicate depth at which encountered, and depth to which it rose in well.

From (feet)	To (feet)	Description of formation material
0	15'	loose sand overburden
15	27'	gravel + sand
27	34'	gravel
34	50'	soft malapai
50	175	black malapai
175	223	purple malapai
223	279	black " w some water
279	350	" fractured malapai w water
		air developed
		@ 15 gpm
		Note: drawdown to
		285' @ approx 10 gpm

I hereby certify that this well was drilled by me (or under my supervision), and that each and all of the statements herein contained are true to the best of my knowledge and belief.

Driller Kenny Porter
Name

Box 414
Address

Cottonwood Az 86326
City State Zip

Date 5/9/87

40

ARIZONA DEPARTMENT OF WATER RESOURCES
15 South 15th Avenue
Phoenix, Arizona 85007

WELL DRILLER REPORT

This report should be prepared by the driller in all detail and filed with the Department within 30 days following completion of the well.

1. Owner Name: Perry Conrad & T. Bruneau
   Address: P.O. Box 490 (Street) Port Hadlock (City) Wa. (State) 98339 (Zip)
2. Driller Name: Campbells Drilling, Inc.
   Address: P.O. Box 3019 (Street) Wickenburg (City) Az. (State) 85358 (Zip)
3. Location: 16 N N/S (Township) 4E E/W (Range) 25 (Section) SW 1/4 (10-acre) SW 1/4 (40-acre) NW 1/4 (160-acre)
4. Well Registration No. 55- 535393 (Required)
5. Permit No. _____ (If issued)

JUN - 9 1992

DESCRIPTION OF WELL

6. Total depth of hole 400 ft.
7. Type of casing PVC
8. Diameter and length of casing 8" Steel in. from 0 to 21, 6" PVC in from 0 to 400.
9. Method of sealing at reduction points _____
10. Perforated from 260 to 280, from 300 to 320, from 340 to 360, 380 to 400'
11. Size of cuts 1/8"x3"x6 Rows Number of cuts per foot 12
12. If screen was installed: Length _____ ft. Diam _____ in. Type _____
13. Method of construction Drilled
    (drilled, dug, driven, bored, jetted, etc)
14. Date started June (Month) 06 (Day) 1992 (Year)
15. Date completed June (Month) 07 (Day) 1992 (Year)
16. Depth to water 200 ft. (If flowing well, so state)
17. Describe point from which depth measurements were made, and give sea-level elevation if available
18. If flowing well, state method of flow regulation: _____
19. Remarks: Estimated 10 GPM

ARCHIVE LINED

DO NOT WRITE IN THIS SPACE
OFFICE RECORD
55-535393
16-4-25BCC
ENTERED JUN 09 1992

DWR-55-55-7/91 (Rev.)

LOG OF WELL

Indicate depth at which water was first encountered, and the depth and thickness of water bearing beds. If water is artesian, indicate depth at which encounterd, and depth to which it rose in well.

From (feet)	To (feet)	Description of formation material
0	120	Black hard Volcanics, some clay strips
120	140	Red Clay
140	165	Red volcanics, some clay
165	260	" " , with white rock
260	270	Yellow & Red
270	320	Black Volcanics
320	360	Red-Yellow-Brown-Orange Conglomerate and Clay
360	400	Black Volcanics - With White.

I hereby certify that this well was drilled by me (or under my supervision), and that each and all statements herein contained are true to the best of my knowledge and belief.

Driller Name: Charles E Campbell

P.O. Box 3019
Street

Wickenburg, AZ. 85358
City State Zip

Date 06/08/92

ARIZONA DEPARTMENT OF WATER RESOURCES
15 South 15th Avenue
Phoenix, Arizona 85007

55-535393
A(16-4)25BCC

COMPLETION REPORT

6 92

1. Per A.R.S. § 45-600, the Completion Report is to be filed with the Department within 30 days after installation of pump equipment by the registered well owner.

2. Drawdown of the water level for a non-flowing well should be measured in feet after not less than 4 hours of continuous operation and while still in operation and for a flowing well the shut-in pressure should be measured in feet above the land or in pounds per square inch at the land surface.

3. The static groundwater level should be measured in feet from the land surface immediately prior to the well capacity test.

4. The tested pumping capacity of the well in gallons per minute for a non-flowing well should be determined by measuring the discharge of the pump after continuous operation for at least 4 hours and for a flowing well by measuring the natural flow at the land surface.

LOCATION OF THE WELL:

16 (N)S	4 (E)W	25	SW 1/4	SW 1/4	NW 1/4
Township	Range	Section	10-acre	40-acre	160-acre

EQUIPMENT INSTALLED:

Kind of pump: Submersible
Turbine, centrifugal, etc.

Kind of power: electric — H.P. Rating of Motor: 1½ HP
Electric, natural gas, gasoline, etc.

Pumping Capacity: 8-12 — Date pump installed: 9-4-92
Gallons per minute

WELL TEST:

Test pumping capacity: 10 — Date Well Tested: 10-2-92
Gallons per minute

Method of Discharge Measurement: ORIFICE
Weir, orifice, current meter, etc.

Static Groundwater Level: 200' ft. Drawdown: 20' ft.

Total Pumping Lift: 220' ft. Drawdown: N/A lbs.
(Flowing Well)

I HEREBY CERTIFY that the above statements are true to the best of my knowledge and belief.

10-4-, 19 92
Date

Perry Conrad
Print Well Owner's Name

Perry Conrad
Signature of Well Owner or Agent

Po Box 1052
Address

Pimacle AZ. 86335
City State Zip

ENTERED OCT - 8 1992

MICROFILMED

DWR-55-56-7/91 (Rev.)

ARIZONA DEPARTMENT OF WATER RESOURCES
Records Management Section
500 N. 3rd Street * Phoenix, Arizona 85004
(602) 417-2405 * (800) 352-8488
www.water.az.gov

Well Driller Report and Well Log

4(

RECEIVED JUL 1 1 2003

FILE NUMBER: A(16-4) 26 ADD
WELL REGISTRATION NUMBER: 55- 598044
PERMIT NUMBER (IF ISSUED)

- Review instructions prior to completing form
- This report should be prepared by the driller in detail and filed with the Department within 30 days following completion of the well.

** PLEASE PRINT CLEARLY **

SECTION 1. REGISTRY INFORMATION

Well Owner

FULL NAME OF COMPANY, ORGANIZATION OR INDIVIDUAL: WILLIAM WASBOTTEN
MAILING ADDRESS: P.O. BOX 514
CITY / STATE / ZIP: CORNVILLE, AZ 86325
CONTACT PERSON NAME AND TITLE:
TELEPHONE NUMBER: 928-634-4536
FAX:

Location of Well

WELL LOCATION ADDRESS (IF KNOWN): PAGE SPRINGS RD, CORNVILLE

TOWNSHIP (N/S)	RANGE (E/W)	SECTION	160 ACRE	40 ACRE	10 ACRE
16 N	4 E	26	NE 1/4	SE 1/4	SE 1/4

LATITUDE			LONGITUDE		
34°	45.	307 N	111°	53.	211 W

LAND SURFACE ELEVATION AT WELL: 3426 Feet Above Sea Level

METHOD OF LATITUDE / LONGITUDE (CHECK ONE): ☒ Hand-Held ☐ USGS Quad Map ☐ Conventional Survey ☒ GPS: ☐ Survey-Grade

COUNTY ASSESSOR'S PARCEL ID NUMBER: BOOK 407 | MAP 29 | PARCEL 12C

COUNTY WHERE WELL IS LOCATED: YAVAPAI

SECTION 2. DRILLING AUTHORIZATION

Drilling Firm

NAME: NAPCO DRILLING dba Northern Arizona Pump, Inc.
DWR LICENSE NUMBER: 377
TELEPHONE NUMBER: 928-634-4978
FAX:

SECTION 3. WELL CONSTRUCTION DETAILS

DATE WELL CONSTRUCTION STARTED: 5-28-03
DATE WELL CONSTRUCTION COMPLETED: 6-10-03
IF FLOWING WELL, METHOD OF FLOW REGULATION: ☐ Valve ☐ Other

Drill Method

CHECK ONE
- ☒ Air Rotary
- ☐ Bored or Augered
- ☐ Cable Tool
- ☐ Dual Rotary
- ☐ Mud Rotary
- ☐ Reverse Circulation
- ☐ Driven
- ☐ Jetted
- ☐ Air Percussion / Odex Tubing
- ☐ Other (please specify)

Method of Well Development

CHECK ONE
- ☒ Airlift
- ☐ Bail
- ☐ Surge Back
- ☐ Surge Pump
- ☐ Other (please specify)

Water Level Information

STATIC WATER LEVEL: 20 Feet Below Land Surface
DATE MEASURED: 6-13-03

Method of Sealing at Reduction Points

CHECK ONE
- ☒ None
- ☐ Packed
- ☐ Swedged
- ☐ Welded
- ☐ Other (please specify)

ANSWERED JUL 1 4 2003

DWR-55-55-10/01 (Rev.)

Well Driller Report and Well Log

WELL REGISTRATION NUMBER
55- 598044

SECTION 4. WELL CONSTRUCTION DESIGN (AS BUILT) (attach additional page if needed)

Borehole			Installed Casing													
DEPTH FROM SURFACE		BOREHOLE DIAMETER (inches)	DEPTH FROM SURFACE		OUTER DIAMETER (inches)	MATERIAL TYPE (X)				PERFORATION TYPE (X)						SLOT SIZE IF ANY (Inches)
FROM (feet)	TO (feet)		FROM (feet)	TO (feet)		STEEL	PVC	ABS	IF OTHER TYPE, DESCRIBE	BLANK OR NONE	WIRE WRAP	SHUTTER SCREEN	MILLS KNIFE	SLOTTED	IF OTHER TYPE, DESCRIBE	
0	20	10	0	34	6 3/8	X				X						
20	34	8	0	200	5		X							X		
34	400	6														

Installed Annular Material											
DEPTH FROM SURFACE		ANNULAR MATERIAL TYPE (X)								FILTER PACK		
						BENTONITE						
FROM (feet)	TO (feet)	NONE	CONCRETE	NEAT CEMENT OR CEMENT GROUT	CEMENT-BENTONITE GROUT	GROUT	CHIPS	PELLETS	IF OTHER TYPE OF ANNULAR MATERIAL, DESCRIBE	SAND	GRAVEL	SIZE
0	34		X									

DEPTH OF BORING		DEPTH OF COMPLETED WELL	
400	Feet Below Land Surface	400	Feet Below Land Surface

DWR-55-55B-10/01 (Rev.)

Well Driller Report and Well Log

WELL REGISTRATION NUMBER
55- 598044

SECTION 5. GEOLOGIC LOG OF WELL

DEPTH FROM SURFACE FROM (feet)	TO (feet)	DESCRIPTION Describe material, grain size, color, etc.	Check (X) every interval where water was encountered
0	35	BOULDERS	X
35	80	MALAPAI	
80	90	MALAPAI CONGLOMERATE	
90	400	CONGLOMERATE	X 380

42

ARIZONA DEPARTMENT OF WATER RESOURCES
15 South 15th Avenue
Phoenix, Arizona 85007

WELL DRILLER REPORT

This report should be prepared by the driller in all detail and filed with the Department within 30 days following completion of the well.

1. Owner Name: Don & Judith Connelly
   Address: St. Rt. Box 819, Sedona AZ 86336
   Street City State Zip
2. Driller Name: Nathan S. White
   Address: P.O. Box 252 Cornville AZ 86325
   Street City State Zip
3. Location: 16 N/S (Township) 4 E/W (Range) 26 (Section) NE 1/4 (10-acre) SE 1/4 (40-acre) NE 1/4 (160-acre)
4. Well Registration No. 55- 532776 (Required)
5. Permit No. _____ (If issued)

RECEIVED JAN 13 1992 OPERATIONS DIV.

DESCRIPTION OF WELL

6. Total depth of hole 362 ft.
7. Type of casing Steel and PVC
8. Diameter and length of casing 8 & 6 in. from 1agl to 80, _____ in from 1 agl to 362.
9. Method of sealing at reduction points grout
10. Perforated from 200 ft to 362, from _____ to _____, from _____ to _____.
11. Size of cuts 1/8" X 6" Number of cuts per foot 6
12. If screen was installed: Length _____ ft. Diam _____ in. Type _____
13. Method of construction Drilled
    (drilled, dug, driven, bored, jetted, etc)
14. Date started 9-16-91
    Month Day Year
15. Date completed 12-20-91
    Month Day Year
16. Depth to water 212 ft. (If flowing well, so state)
17. Describe point from which depth measurements were made and give sea-level elevation if available
    Ground level approx 3800
18. If flowing well, state method of flow regulation: _____
19. Remarks: Bail tested at 20 GPM with 40 ft. drawdown

ENTERED JAN 16 1992

DO NOT WRITE IN THIS SPACE
OFFICE RECORD

Registration File No. 55-532776
Received A(16-4)26 ADA
Entered

DWR-55-55-7/91 (Rev.)

LOG OF WELL

Indicate depth at which water was first encountered, and the depth and thickness of water bearing beds. If water is artesian, indicate depth at which encounterd, and depth to which it rose in well.

From (feet)	To (feet)	Description of formation material
0	20	malapai boulders
20	26	hard conglomerate
26	28	hard clay
28	32	boulders
32	56	hard conglomerate
56	68	hard clay & gravel with some water
68	79	hard conglomerate
79	86	layer of malapai & clay
86	108	solid malapai
108	130	hard clay
130	132	layer of malapai
132	146	hard conglomerate
146	152	hard clay
152	160	hard conclomerate
160	170	clay
170	192	hard conglomerate & malapai
192	195	clay
195	236	hard conglomerate
236	362	hard conclomerate & malapai

I hereby certify that this well was drilled by me (or under my supervision), and that each and all statements herein contained are true to the best of my knowledge and belief.

Driller Name: Nathan S. White / NAPCO DRILLING

P.O.Box 252
Street

Cornville AZ 86325
City State Zip

Date 12-26 91

ARIZONA DEPARTMENT OF WATER RESOURCES

15 South 15th Avenue
Phoenix, Arizona 85007

Registration No. 55-532776

File No. A(16-4)26ADA

OCT 16 1992

COMPLETION REPORT

1. Per A.R.S. § 45-600, the Completion Report is to be filed with the Department within 30 days after installation of pump equipment by the registered well owner.

2. Drawdown of the water level for a non-flowing well should be measured in feet after not less than 4 hours of continuous operation and while still in operation and for a flowing well the shut-in pressure should be measured in feet above the land or in pounds per square inch at the land surface.

3. The static groundwater level should be measured in feet from the land surface immediately prior to the well capacity test.

4. The tested pumping capacity of the well in gallons per minute for a non-flowing well should be determined by measuring the discharge of the pump after continuous operation for at least 4 hours and for a flowing well by measuring the natural flow at the land surface.

LOCATION OF THE WELL:

16 (N)/S	4 (E)/W	26	NE 1/4	SE 1/4	NE 1/4
Township	Range	Section	10-acre	40-acre	160-acre

EQUIPMENT INSTALLED:

Kind of pump: SUBM.
Turbine, centrifugal, etc.

Kind of power: ELECT. H.P. Rating of Motor: 2
Electric, natural gas, gasoline, etc.

Pumping Capacity: 20 Date pump installed: 12-20-91
Gallons per minute

WELL TEST:

Test pumping capacity: 20 Date Well Tested: 12-21-91
Gallons per minute

Method of Discharge Measurement: WEIR
Weir, orifice, current meter, etc.

Static Groundwater Level: 212 ft. Drawdown: 40 ft.

Total Pumping Lift: 252 ft. Drawdown: -0- lbs.
(Flowing Well)

I HEREBY CERTIFY that the above statements are true to the best of my knowledge and belief.

ENTERED OCT 19 1992

9-25, 1992
Date

Don Connelly Judy Connelly
Print Well Owner's Name

Judy Connelly
Signature of Well Owner or Agent

STRT 2 Box 819
Address

SEDONA AZ 86336
City State Zip

RECEIVED

DWR-55-56-7/91 (Rev.)

ARIZONA DEPARTMENT OF WATER RESOURCES
Records Management Section
500 N. 3rd Street • Phoenix, Arizona 85004
(602) 417-2405 * (800) 352-8488
www.water.az.gov

RECEIVED NOV 14 2003 Information Management

Well Driller Report and Well Log

43

- Review instructions prior to completing form
- This report should be prepared by the driller in detail and filed with the Department within 30 days following completion of the well.

** PLEASE PRINT CLEARLY **

A16-41.23 DDB
WELL REGISTRATION NUMBER
55- 599465
PERMIT NUMBER (IF ISSUED)

SECTION 1. REGISTRY INFORMATION

Well Owner

FULL NAME OF COMPANY, ORGANIZATION OR INDIVIDUAL
AZ GAME & FISH,

MAILING ADDRESS
2221 W GREENWAY RD

CITY / STATE / ZIP
PHOENIX, AZ 85023

CONTACT PERSON NAME AND TITLE

TELEPHONE NUMBER
-

FAX

Location of Well

WELL LOCATION ADDRESS (IF KNOWN)
1600 N. PAGE SPRINGS RD

TOWNSHIP (N/S)	RANGE (E/W)	SECTION	160 ACRE	40 ACRE	10 ACRE
16N	04E	23	SE 1/4	SE 1/4	NW 1/4

LATITUDE				LONGITUDE			
34°	45.	890	-N	111°	53.	667	-W

LAND SURFACE ELEVATION AT WELL
3520 Feet Above Sea Level

METHOD OF LATITUDE / LONGITUDE (CHECK ONE)
☒ Hand-Held
☐ USGS Quad Map ☐ Conventional Survey ☒ GPS : ☐ Survey-Grade

COUNTY ASSESSOR'S PARCEL ID NUMBER

BOOK	MAP	PARCEL
407	28	013

COUNTY WHERE WELL IS LOCATED
YAVAPAI

SECTION 2. DRILLING AUTHORIZATION

Drilling Firm

NAME
NAPCO DRILLING dba Northern Arizona Pump, Inc.

DWR LICENSE NUMBER
377

TELEPHONE NUMBER
928-634-4978

FAX

SECTION 3. WELL CONSTRUCTION DETAILS

DATE WELL CONSTRUCTION STARTED
9-16-03

DATE WELL CONSTRUCTION COMPLETED
9-22-03

IF FLOWING WELL, METHOD OF FLOW REGULATION
☒ Valve ☐ Other

Drill Method

CHECK ONE
- ☒ Air Rotary
- ☐ Bored or Augered
- ☐ Cable Tool
- ☐ Dual Rotary
- ☐ Mud Rotary
- ☐ Reverse Circulation
- ☐ Driven
- ☐ Jetted
- ☐ Air Percussion / Odex Tubing
- ☐ Other (please specify)

Method of Well Development

CHECK ONE
- ☒ Airlift
- ☐ Bail
- ☐ Surge Back
- ☐ Surge Pump
- ☐ Other (please specify)

Water Level Information

STATIC WATER LEVEL
FLOWING Feet Below Land Surface

DATE MEASURED
9-23-03

Method of Sealing at Reduction Points

CHECK ONE
- ☐ None
- ☐ Packed
- ☐ Swedged
- ☐ Welded
- ☒ Other (please specify)

PRESSURE GROUT

DWR-55-55-10/01 (Rev.)

ANSWERED NOV 25 2003

Well Driller Report and Well Log

WELL REGISTRATION NUMBER
55- 599465

SECTION 5: GEOLOGIC LOG OF WELL

DEPTH FROM SURFACE FROM (feet)	TO (feet)	DESCRIPTION Describe material, grain size, color, etc.	Check (X) every interval where water was encountered
0	40	BOULDERS	X
40	145	CONGLOMERATE	X
145	155	MALAPAI	
155	200	SAND.	
200	260	CLAY	
260	280	SANDSTONE	X
280	300	CONGLOMERATE	X

Arizona Department of Water Resources
Records Management Section
500 N. 3rd Street • Phoenix, Arizona 85004
(602) 417-2405 • (800) 352-8488
www.water.az.gov

Pump Installation Completion Report

RECEIVED
DEC - 9 2003
GROUNDWATER MGT

- Review instructions prior to completing form in black or blue ink.
- The registered well owner should file this report with the Department within 30 days following installation of pump equipment.

FILE NUMBER: AGC-41-X-S-103
WELL REGISTRATION NUMBER: 55- 599465

** PLEASE PRINT CLEARLY **

SECTION 1: REGISTRY INFORMATION

Well Owner

FULL NAME OF COMPANY, ORGANIZATION, OR INDIVIDUAL: Arizona Game & Fish Dept

MAILING ADDRESS: 2221 W. Greenway Rd.

CITY / STATE / ZIP CODE: Phoenix, Az 85023

CONTACT PERSON NAME AND TITLE: Mike Chivos, Wildlife Specialist III

TELEPHONE NUMBER: 928-639-1346

FAX: 928-634-1279

Location of Well

WELL LOCATION ADDRESS (IF ANY):

TOWNSHIP (N/S)	RANGE (E/W)	SECTION	160 ACRE	40 ACRE	10 ACRE
16N	04E	23	SE ¼	SE ¼	NW ¼

COUNTY ASSESSOR'S PARCEL ID NUMBER (MOST RECENT)

BOOK	MAP	PARCEL
407	28	013

COUNTY WHERE WELL IS LOCATED: YAVAPAI

SECTION 2: EQUIPMENT INSTALLED

DATE PUMP INSTALLED: November 1, 2003

Pump Type
CHECK ONE

- ☐ Air Lift
- ☐ Bucket
- ☐ Centrifugal
- ☐ Jet
- ☐ Piston
- ☐ Rotary
- ☒ Submersible
- ☐ Turbine
- ☐ Other (*please specify*):

Power Type
CHECK ONE

- ☐ Diesel Engine
- ☒ Electric Motor
- ☐ Gasoline Engine
- ☐ Hand
- ☐ Natural Gas
- ☐ Windmill
- ☐ Other (*please specify*):

RATED PUMP CAPACITY: 20 Gallons Per Minute

HORSE POWER RATING OF MOTOR: 1 hp

SECTION 3: WELL TEST

Pump Test Data

DATE WELL TESTED: 12-1-03

STATIC WATER LEVEL (A): Zero Feet Below Land Surface

PUMPING WATER LEVEL (B): Zero Feet Below Land Surface

DRAWDOWN [(B) – (A)]: None Feet Below Land Surface

TEST PUMPING RATE: 20 Gallons Per Minute

DURATION OF PUMP TEST (Minimum 4 Hours): 8 hours Hours

TOTAL PUMPING LIFT: Zero Feet

FOR FLOWING WELL MEASURED SHUT IN HEAD: 1 ☐ FT ☒ PSI

Method of Discharge Measurement
CHECK ONE

- ☐ Bailer
- ☒ Bucket – Barrel – Stopwatch
- ☐ Current
- ☐ Estimated – Air Lift
- ☐ Gauge
- ☐ Meter
- ☐ Orifice
- ☐ Volume
- ☐ Weir – Flume
- ☐ Other (*please specify*):

Method of Measuring Water Level
CHECK ONE

- ☐ Air Line
- ☐ Electric Measuring Line (Sounder)
- ☐ Steel Tape
- ☒ Other (*please specify*): Artesian well - water never stopped flowing

I HEREBY CERTIFY that the above statements are true to the best of my knowledge and belief according to A.R.S. § 45-600(B).

SIGNATURE OF WELL OWNER: [signature]

DATE: 12-1-03

ARIZONA DEPARTMENT OF WATER RESOURCES
Records Management Section
500 N. 3rd Street * Phoenix, Arizona 85004
(602) 417-2405 * (800) 352-8488
www.water.az.gov

Well Driller Report and Well Log

44

RECEIVED JUN 13 2005 WATER MGT

FILE NUMBER: A(16-4) 23 DAB
WELL REGISTRATION NUMBER: 55- 201644
PERMIT NUMBER (IF ISSUED):

- Review instructions prior to completing form
- This report should be prepared by the driller in detail and filed with the Department within 30 days following completion of the well.

** PLEASE PRINT CLEARLY **

SECTION 1. REGISTRY INFORMATION

Well Owner

FULL NAME OF COMPANY, ORGANIZATION OR INDIVIDUAL: JOHN E GROVES
MAILING ADDRESS: 4222 E 59TH ST
CITY / STATE / ZIP: DAVENPORT, IA 52807
CONTACT PERSON NAME AND TITLE:
TELEPHONE NUMBER: 563-359-0789
FAX:

Location of Well

WELL LOCATION ADDRESS (IF KNOWN):

TOWNSHIP (N/S)	RANGE (E/W)	SECTION	160 ACRE	40 ACRE	10 ACRE
16N	4E	23	SE 1/4	NE 1/4	NW 1/4

LATITUDE: 34° 46 . 460 N
LONGITUDE: 111° 53 . 1809 W
LAND SURFACE ELEVATION AT WELL: 3590 Feet Above Sea Level
METHOD OF LATITUDE / LONGITUDE (CHECK ONE): ☒ Hand-Held ☐ USGS Quad Map ☐ Conventional Survey ☒ GPS: ☐ Survey-Grade
COUNTY ASSESSOR'S PARCEL ID NUMBER: BOOK 407 MAP 28 PARCEL 029H
COUNTY WHERE WELL IS LOCATED: Yavapai

SECTION 2. DRILLING AUTHORIZATION

Drilling Firm

NAME: K. P. VENTURES WELL DRILLING & PUMP SERVICE
DWR LICENSE NUMBER: 562
TELEPHONE NUMBER: 928-639-1709
FAX: 928 634 9336

SECTION 3. WELL CONSTRUCTION DETAILS

DATE WELL CONSTRUCTION STARTED: 12/9/04
DATE WELL CONSTRUCTION COMPLETED: 2/6/04
IF FLOWING WELL, METHOD OF FLOW REGULATION: ☐ Valve ☐ Other

Drill Method

CHECK ONE
- ☒ Air Rotary
- ☐ Bored or Augered
- ☐ Cable Tool
- ☐ Dual Rotary
- ☐ Mud Rotary
- ☐ Reverse Circulation
- ☐ Driven
- ☐ Jetted
- ☐ Air Percussion / Odex Tubing
- ☐ Other (please specify)

Method of Well Development

CHECK ONE
- ☒ Airlift
- ☐ Bail
- ☐ Surge Back
- ☐ Surge Pump
- ☐ Other (please specify)

Water Level Information

STATIC WATER LEVEL: 98 Feet Below Land Surface
DATE MEASURED: 2/6/04

Method of Sealing at Reduction Points

CHECK ONE
- ☐ None
- ☐ Packed
- ☐ Swedged
- ☐ Welded
- ☐ Other (please specify)

Cement Grout

ENTERED JUN 17 2005

DWR-55-55-10/01 (Rev.)

Well Driller Report and Well Log

WELL REGISTRATION NUMBER
55- 201644

SECTION 4. WELL CONSTRUCTION DESIGN (AS BUILT) (attach additional page if needed)

Borehole			Installed Casing													
DEPTH FROM SURFACE		BOREHOLE DIAMETER (inches)	DEPTH FROM SURFACE		OUTER DIAMETER (inches)	MATERIAL TYPE (X)				PERFORATION TYPE (X)						SLOT SIZE IF ANY (inches)
FROM (feet)	TO (feet)		FROM (feet)	TO (feet)		STEEL	PVC	ABS	IF OTHER TYPE, DESCRIBE	BLANK OR NONE	WIRE WRAP	SHUTTER SCREEN	MILLS KNIFE	SLOTTED	IF OTHER TYPE, DESCRIBE	
0	20	14	0	295	10	✓										
20	337	10														

Installed Annular Material											
DEPTH FROM SURFACE		ANNULAR MATERIAL TYPE (X)								FILTER PACK		
						BENTONITE						
FROM (feet)	TO (feet)	NONE	CONCRETE	NEAT CEMENT OR CEMENT GROUT	CEMENT-BENTONITE GROUT	GROUT	CHIPS	PELLETS	IF OTHER TYPE OF ANNULAR MATERIAL, DESCRIBE	SAND	GRAVEL	SIZE

DEPTH OF BORING	DEPTH OF COMPLETED WELL
337 Feet Below Land Surface	337 Feet Below Land Surface

DWR-55-55B-10/01 (Rev.)

Well Driller Report and Well Log

WELL REGISTRATION NUMBER
55- 201644

SECTION 5. GEOLOGIC LOG OF WELL

DEPTH FROM SURFACE FROM (feet)	TO (feet)	DESCRIPTION Describe material, grain size, color, etc.	Check (X) every interval where water was encountered
0	17	Gravel & boulders	
17	130	Hard conglomerate	
130	160	Hard conglomerate, but with more clay	
160	170	Hard Conglomerate	
170	172	Void with Water	✓
172	180	Conglomerate, more clay, decomposed	basalt
180	292	" "	
292	293	Void	
293	296	Red Sandstone with water	✓
296	320	Red sandstone with water	✓
320	337	Red Sandstone (Caving 315-337'	
		Air developed at 1000+ gpm.	

REISSUED #2

STATE OF ARIZONA

DEPARTMENT OF
WATER RESOURCES

WELL DRILLER REPORT

This report should be prepared by the driller in all detail and filed with the Department within 30 days following completion of the well.

1. Owner Adam D. Goettl
Name
P.O. Box 10036 Phoenix, Az. 85016
Address

2. Lessee or Operator Same
Name
Address

3. Driller Myers Drilling Co.
Name
Star Route 2 Box 293 Camp Verde, Az. 86322
Address

4. Location of well: T16N, R4E, Sec. 26, NE¼ NE¼ NW¼

5. Permit No. (if issued) _____ Reg. #55-501424

DESCRIPTION OF WELL

6. Total depth of hole 827 ft.
7. Type of Casing Steel
8. Diameter and length of casing 12 in. from 0 to 28', 8 in from 0 to 61'7", 6 in. from 0-721'6", and 5" from 699'8" to 827' TD
9. Method of sealing at reduction points Cement Grout around 8" 0-62' BGL Steel Shoe
10. Perforated from 745 to 760, from 796 to 821, ~~from~~ _____ to top of 5".
11. Size of cuts 1/8" x 3" Number of cuts per foot 12
12. If screen was installed: Length N/A ft. Diam _____ in. Type _____
13. Method of construction Drilled
drilled, dug, driven, bored, jetted, etc.
14. Date started May 7, 1982
Month day year
15. Date completed October 11, 1982
Month day year
16. Depth to water 44' BGL ft. (If flowing well, so state.)
17. Describe point from which depth measurements were made, and give sea-level elevation if available. Ground Level 3475' MSL
18. If flowing well, state method of flow regulation N/A
19. REMARKS: See attached detailed well log, well profile chart & pump test reports that have been provided additionally in detail.

DO NOT WRITE IN THIS SPACE
OFFICE RECORD
Registration No. 55-501424
Received _____ By _____
Entered 1-7-83 By _____
File No. A(16-4)26 baa

(Well log to appear on Reverse side)

MICROFILMED

RECEIVED
JAN 5 1983
DEPT. OF
WATER RESOURCES

LOG OF WELL

Indicate depth at which water was first encountered, and the depth and thickness of water bearing beds. If water is artesian, indicate depth at which encountered, and depth to which it rose in well.

FROM (FEET)	TO (FEET)	DESCRIPTION OF FORMATION MATERIAL
NOTE: THIS IS A VERY COMPLEX LOG. SHOWN HEREON IS A DIGEST. FOR DETAILS SEE ADDITIONAL LOG PROVIDED.		
Surf.	6½	Brown clay soil
6½	26	river run sand, gravel, boulders & clay. SWL 6½' 5 GPM wtr. entry
26	79	V. hard cemented conglomerate. Water shut off w/
		8" casing 0-61'7" and cemented to surface.
79	111	Fairly hard Malapai volcanics. SWL 97'
111	139	Sand, gravel & small rocks in stiff lime matrix. Dry.
139	178	Hard cemented conglomerate. Dry SWL 117'
178	230	Dk. brn. malapai w/ lime crevice filling. 4 GPM wtr. 190-205
230	346	Alt. layers of clays and volcanics. Hard & soft.
346	425	Hard black malapai w/ lime & clay crevice filling.
425	442	Orange-brn. clay w/ gravels
442	507	Hard black malapai w/ lime & clay crevice filling.
507	546	Alt. layers of clays & hard volcanics.
546: TOP, PPn NACO REDBEDS. BASE OF VOLCANIC & CLAYS: Water entry Bailed 55 GPM Very silty		
546	660	Caving in part. Very clayey Alt. layers of sandstone, mudstone, LS & combos.
660: TOP MISSISSIPPIAN REDWALL TRANSITION ZONE. VERY FOSSILLIF.(Crinoids)		
Very cavey.		Bail tested 91 GPM w/5' DD @ 705'; very silty.
660	722	Mr LS w/red mudstone cavern & crevice filling. Fossil.
Hole caving; additional water entry to about 200 GPM, very silty- orange.		
Ran 6" steel casing		surf. to 721½ ft. Shut off top water. SWL very erratic 13' to 45' BGL
722	740	60 to 90% Dk. red sandy mudstone cavern fill, in Mr LS
740	765	Caving. Highly fract. Mr LS (fossil) w/mudstone. Water entry.
765	795	Very tough Sndy mudstone crevice fill in Mr cavern.
795	819	Cavey highly fract. & rotten Mr Ls w/20% mudstone. ~~90% cutting loss into formation. Water zone.~~
		Bailed 60 GPM w/2'rise. SWL erratic from 33 to 53'
819	827 TD	95% v. hard Mr LS & chert. Hole caving badly mostly
		from the 740-65' level. Forced to set 5" perf.
		casing & complete well.

I hereby certify that this well was drilled by me (or under my supervision), and that each and all of the statements herein contained are true to the best of my knowledge and belief. Meyers Drilling Co.

Prepared by:
Earl Huggins, Consultant
Box 1107
Sedona, Az. 86336

Driller Kenneth E Myers
Kenneth E. Myers Name
Star Route 2 Box 293
Camp Verde, Az. 86322 Address

Date

REISSUED #2

RECEIVED JAN 5 1983 DEPT. OF WATER RESOURCES

DEPARTMENT OF WATER RESOURCES
222 North Central Avenue - Suite 850
Phoenix, Arizona 85004

Registration No. 55-501424
Owner of Well Site Adam D. Goettl
File No. A(16-4)26 baa

COMPLETION REPORT

1. A Completion Report is to be filed with the Department within 30 days after installation of pump equipment.

2. The tested pumping capacity of the well in gallons per minute for a nonflowing well should be determined by measuring the discharge of the pump after continuous operation for at least four hours and for a flowing well by measuring the natural flow at the land surface.

3. Drawdown of the water level for a nonflowing well should be measured in feet after not less than four hours of continuous operation and while still in operation and for a flowing well the shutin pressure should be measured in feet above the land or in pounds per square inch at the land surface.

4. The static groundwater level should be measured in feet from the surface immediately prior to the well capacity test.

LOCATION OF THE WELL:

T16N, R4E, Sec. 26, NE¼ NE¼ NW¼

Date Well Completed Oct. 11, 1982 Depth of Well 827'

1. Well Test:
Test Pumping Capacity 252 GPM (Gallons per minute) Date Well Tested Oct. 5 & 6, 1982 18 hr. test 9 hrs. ea. day. APPROX.

Method of Discharge Measurement Orifice (Weir, orifice, current meter, et cetera)

SWL before test: 46'8" BGL
Static Groundwater Level ft ~~Drawdown~~ SWL rose 2 ft. after test. ft
SWL after test: 44'8" BGL
Total Pumping Lift 60 ft. ft Drawdown lbs (Flowing well)

2. Equipment Installed: Test pump 15 HP submersible turbine 460 v. 3 ph.
Kind of Pump Test pumped only w/15 HP rented pump, & generator. No owner (Turbine, Centrifugal, et cetera) pump in hole at this time, nor power.

Kind of Power Future APS elect. (Electric, Natural, Gas, et cetera) Horse Power Rating of Motor not selected.

I HEREBY CERTIFY that the above statements are true to the best of my knowledge and belief.

Note: The owner is instructed to notify you in writing when the permanent pump is installed.

See additional pump test report provided separately.

AquaLogic Associates
Earl Huggins (K.E.M.)
Signature Earl Huggins, Consultant

Box 1107 Sedona, Az. 86336
Address

October 16, 1982
Date City State Zip

MICROFILMED

1-7-83

ARIZONA DEPARTMENT OF WATER RESOURCES
Records Management Section
500 N. 3rd Street • Phoenix, Arizona 85004
(602) 417-2405 • (800) 352-8488
www.water.az.gov

Well Driller Report and Well Log

- This report should be prepared by the driller in detail and filed with the Department within 30 days following completion of the well.

** PLEASE PRINT CLEARLY **

RECEIVED JAN - 6 2006

FILE NUMBER: A(16-4) 34 ABB
WELL REGISTRATION NUMBER: 55-205573
PERMIT NUMBER (IF ISSUED):

SECTION 1. DRILLING AUTHORIZATION

Drilling Firm

NAME: K. P. VENTURES WELL DRILLING & PUMP SERVICE	DWR LICENSE NUMBER: 562
ADDRESS: P.O. BOX 2411	TELEPHONE NUMBER: 928-639-1709
CITY/STATE/ZIP: COTTONWOOD, AZ 86326-2411	FAX:

SECTION 2. REGISTRY INFORMATION

Well Owner

FULL NAME OF COMPANY, ORGANIZATION OR INDIVIDUAL: OAK CREEK VALLEY PROPERTY OWNERS ASSOCIATION
MAILING ADDRESS: 890 N OAK CREEK VALLEY RD
CITY / STATE / ZIP: CORNVILLE, AZ 86325
CONTACT PERSON NAME AND TITLE:
TELEPHONE NUMBER: 928-634-4069
FAX:
WELL NAME:

Location of Well

WELL LOCATION ADDRESS (IF KNOWN):

TOWNSHIP (N/S)	RANGE (E/W)	SECTION	160 ACRE	40 ACRE	10 ACRE
16N	4E	34	NE 1/4	NW 1/4	NW 1/4

LATITUDE			LONGITUDE		
°	'	"N	°	'	"W

LAND SURFACE ELEVATION AT WELL: Feet Above Sea Level

METHOD OF LATITUDE / LONGITUDE (CHECK ONE): ☐ Hand-Held ☐ USGS Quad Map ☐ Conventional Survey ☐ GPS: ☐ Survey-Grade

COUNTY ASSESSOR'S PARCEL ID NUMBER: BOOK 407 MAP 34 PARCEL 123

COUNTY WHERE WELL IS LOCATED: Yavapai

ANSWERED JAN 10 2006

SECTION 3. WELL CONSTRUCTION DETAILS

Drill Method

CHECK ONE
- ☒ Air Rotary
- ☐ Bored or Augered
- ☐ Cable Tool
- ☐ Dual Rotary
- ☐ Mud Rotary
- ☐ Reverse Circulation
- ☐ Driven
- ☐ Jetted
- ☐ Air Percussion / Odex Tubing
- ☐ Other (please specify)

Method of Well Development

CHECK ONE
- ☒ Airlift
- ☐ Bail
- ☐ Surge Back
- ☐ Surge Pump
- ☐ Other (please specify)

Condition of Well

CHECK ONE
- ☐ Capped
- ☒ Pump Installed

Flowing @ 2000+ GPM

Method of Sealing at Reduction Points

CHECK ONE
- ☐ None
- ☐ Packed
- ☐ Swedged
- ☐ Welded
- ☐ Other (please specify)

Cement Grout

Condition of Well

DATE WELL CONSTRUCTION STARTED: 1/7/05
DATE WELL CONSTRUCTION COMPLETED: 4/5/05

I state that this notice is filed in compliance with A.R.S. §45-596 and is complete and correct to the best of my knowledge and belief.

DRILLING FIRM	SIGNATURE OF QUALIFYING PARTY	DATE
KP Ventures Well Drilling	Henry Carter	

DWR-55-55-10/01 (Rev.)

Well Driller Report and Well Log

WELL REGISTRATION NUMBER
55- 205573

SECTION 4. WELL CONSTRUCTION DESIGN (AS BUILT) (attach additional page if needed)

DEPTH OF BORING	DEPTH OF COMPLETED WELL
660 Feet Below Land Surface	660 Feet Below Land Surface

Water Level Information

STATIC WATER LEVEL	DATE MEASURED	TIME MEASURED	IF FLOWING WELL, METHOD OF FLOW REGULATION
Flowing Feet Below Land Surface	4/5/05		☒ Valve ☐ Other:

Borehole			Installed Casing													
DEPTH FROM SURFACE		BOREHOLE DIAMETER (inches)	DEPTH FROM SURFACE		OUTER DIAMETER (inches)	MATERIAL TYPE (X)				PERFORATION TYPE (X)						SLOT SIZE IF ANY (inches)
FROM (feet)	TO (feet)		FROM (feet)	TO (feet)		STEEL	PVC	ABS	IF OTHER TYPE, DESCRIBE	BLANK OR NONE	WIRE WRAP	SHUTTER SCREEN	MILLS KNIFE	SLOTTED	IF OTHER TYPE, DESCRIBE	
0	75	28	0	560	10	X										
75	560	17½														
560	660	10														

Installed Annular Material

DEPTH FROM SURFACE		ANNULAR MATERIAL TYPE (X)								FILTER PACK		
						BENTONITE						
FROM (feet)	TO (feet)	NONE	CONCRETE	NEAT CEMENT OR CEMENT GROUT	CEMENT-BENTONITE GROUT	GROUT	CHIPS	PELLETS	IF OTHER TYPE OF ANNULAR MATERIAL, DESCRIBE	SAND	GRAVEL	SIZE
0	75			X								
0	560			X								

Southwest Ground-water Consultants, Inc.

LOG OF WELL

WELL NO. OCV-3 SHEET 1 OF 7

PROJECT: **Oak Creek Valley Production Well** PROJECT NO. B.874
WELL LOCATION: Lot 122 of Oak Creek Valley Unit 2 FOREMAN: Kenny Porter
DRILLING CONTRACTOR: KP Ventures LOGGED BY: DJE, CRC
DRILLING EQUIPMENT: Schramm START DATE: 1/7/05 FINISH DATE: 4/5/05
DRILLING METHOD: direct air rotary [redacted] WATER LEVEL: First water at 10 ft-bgs
TOTAL DEPTH: 660 ft bgs SCREEN INTERVAL: NA (open hole) 560-660 ft-bgs
CASING: 10-inch diameter blank to 560 ft-bgs SAMPLING METHOD: Composite grab over 10 ft

Depth BGS (Feet)	DESCRIPTION	WELL CONSTRUCTION DETAILS AND/OR DRILLING REMARKS
5, 10, 15, 20, 25, 30, 35, 40, 45, 50, 55	POORLY GRADED GRAVEL (GP): Multi-colored, fine to medium size, angular to well rounded gravel of mixed source. Pieces include sandstone, limestone, and basalt.	- Alluvium Weathered zone.
60, 65, 70, 75	SANDSTONE: Reddish white, predominately very fine to fine quartz sandstone. Strong reaction to HCL. Same as above (SANDSTONE): 10% angular basalt and limestone.	- Verde Formation

Notes:

Southwest Ground-water Consultants, Inc.

LOG OF WELL

WELL NO. OCV-3 SHEET 2 OF 7

Depth BGS (Feet)	DESCRIPTION	WELL CONSTRUCTION DETAILS AND/OR DRILLING REMARKS
75		
80	Same as above (SANDSTONE): Predominately white limestone. 40% reddish white limestone. Trace basalt.	
85		
90	BASALT: Light grey to white, coarse sand size fragments of basalt mixed with small percent of limestone and sandstone. Strong reaction to HCL. (Tertiary)	Highly weathered zone w/ soil (Caliche)
95		
100		
105		
110	Same as above (BASALT): Dark bluish gray, predominately coarse-sand and fine to medium gravel size highly vesicular fragments. Secondary calcite and quartz present. Moderate reaction to HCL.	Dense but highly fractured zone.
115		
120		
125		
130	Same as above (BASALT): Dark bluish gray, predominately coarse sand size angular grains. Trace secondary minerals. Weak reaction to HCL.	
135		
140		
145		
150	MUDSTONE: Reddish brown w/ dark blue gray. Basalt fragments are angular. Claystone portion is sub-angular to rounded, weakly cemented, predominately medium sand to fine gravel size. No reaction to HCL.	- Verde Formation Contact between basalt and mudstone. Some portion of cuttings could be interpreted as a sandstone or claystone.
155		
160		
165		
170		
175		

Notes:

Southwest Ground-water Consultants, Inc.

LOG OF WELL

WELL NO. OCV-3 SHEET 3 OF 7

Depth BGS (Feet)	DESCRIPTION	WELL CONSTRUCTION DETAILS AND/OR DRILLING REMARKS
175		
180		
185		
190		
195		
200	Same as above (MUDSTONE): Reddish brown, angular coarse sand size fragments of well cemented mudstone. Trace portions of quartz, fine grained sandstone, limestone, and basalt. Weak to no reaction to HCL.	
205		
210		
215		
220		
225		
230		
235		
240		
245		
250		
255		
260		
265		
270		
275		

Notes:

Southwest Ground-water Consultants, Inc.

LOG OF WELL

WELL NO. OCV-3 SHEET 4 OF 7

Depth BGS (Feet)	DESCRIPTION	WELL CONSTRUCTION DETAILS AND/OR DRILLING REMARKS
275, 280, 285, 290, 295, 300, 305, 310, 315, 320, 325, 330, 335, 340, 345, 350	Same as above (MUDSTONE): Reddish brown, predominately fine-coarse angular fragments.	
355, 360, 365, 370, 375	BASALT : Bluish gray, predominately medium-coarse sand size grains of highly weathered basalt. No reaction to HCL. Quartz crystals present.	Condition of fragments varies from very hard (quartz) to very soft (clay).

Notes:

Southwest Ground-water Consultants, Inc.

LOG OF WELL

WELL NO. OCV-3 SHEET 5 OF 7

Depth BGS (Feet)	DESCRIPTION	WELL CONSTRUCTION DETAILS AND/OR DRILLING REMARKS
375		
380	Same as above (BASALT)	
385		
390		
395		
400		
405		
410		
415		
420		
425		
430	Same as above (BASALT): Reddish brown, predominately fine to coarse size fragments. Weak reaction to HCL. Moderate plastic fines.	Highly weathered zone w/ soil (clay)
435		
440	Same as above (BASALT) Reddish gray. Higher percentage of secondary calcite and quartz present. Moderate reaction to HCL.	
445		
450		
455		
460		
465		
470		
475		

Notes:

Southwest Ground-water Consultants, Inc.

LOG OF WELL

WELL NO. OCV-3 SHEET 6 OF 7

Depth BGS (Feet)	DESCRIPTION	WELL CONSTRUCTION DETAILS AND/OR DRILLING REMARKS
475		
480	Same as above (BASALT) Bluish gray. Predominately medium size sand grains. Quartz and secondary calcite present. Weak reaction to HCL.	
485		
490		
495		
500		
505		
510		
515		
520		
525		
530		
535		
540	Same as above (BASALT) Dark blue gray. Predominately coarse sand to fine gravel angular fragments.	
545		
550		
555		
560		
565		
570	GRAVELLY SAND (SP-GP): Multicolored mix of vesicular basalt, volcanic tuff, limestone, and mudstone. Cuttings are predominantly well rounded coarse sand to medium gravel.	- Agglomerate
575		

Notes:

Southwest Ground-water Consultants, Inc.

LOG OF WELL

WELL NO. OCV-3 SHEET 7 OF 7

Depth BGS (Feet)	DESCRIPTION	WELL CONSTRUCTION DETAILS AND/OR DRILLING REMARKS
575, 580, 585, 590, 595, 600, 605, 610, 615, 620, 625, 630, 635, 640, 645, 650, 655, 660, 665, 670, 675	POORLY GRADED SAND w/ GRAVEL (SP): Cuttings have become more angular. Small percentage of soft, red mudstone . Same as above (SP-GP): Cuttings predominately angular coarse sand. Mix of basalt, limestone, and mudstone. POORLY GRADED SAND (SP): Multicolored, predominately fine to coarse sub-angular grains.	
	LIMESTONE - Red, medium to coarse sand size grains of limestone. High percentage of fine to coarse sand of mixed source. High percentage of sand to fine gravel size Crinoid fragments.	- Redwall Limestone Total Depth = 660 ft-bgs

Notes:

Well Driller Report and Well Log

WELL REGISTRATION NUMBER
55- 205573

SECTION 6. WELL SITE PLAN

NAME OF WELL OWNER	COUNTY ASSESSOR'S PARCEL ID NUMBER		
	BOOK	MAP	PARCEL
OAK CREEK VALLEY PROPERTY OWNERS ASSOCIATION	407	34	123

- Please draw the following: (1) the boundaries of property on which the well was located; (2) the proposed well location; (3) the locations of all septic tank systems and sewer systems on the property or within 100 feet of the well location, even if on neighboring properties; and (4) any permanent structures on the property that may aid in locating the well.
- Please indicate the distance between the well location and any septic tank system or sewer system.

N
W E
S

1" = _____ ft

See attached

AQUIFER TEST RESULTS

Aquifer Test Record - Constant Rate Test

Southwest Ground-water Consultants, Inc.

Date 7/6 - 7/7/2006

Well Number: MPE-1 **Job Title:** Mingus Panarama Estates

Job Number: B.1293 **Reported By:** ALD, DRE

Pumping Contractor:	NAPCO	Static Water Level:	102.58 ft bls
Foreman:	Marty	Measure Point:	Top of Sounder Tube
Bailer/pump size, capacity, make:		Stick Up:	+ 3.61 ft
Average Q:	150 gpm	Line Correction:	0 ft

Clock Time		Time Since Pump Start	Sounder Reading	Water Level	Draw down (s)	Dis-Charge (Q)	Specific Capacity	Specific Draw down	Remarks
hours	min	minutes	feet	feet	feet	gpm	gpm/ft	ft/gpm	
14	00	0	102.58	102.58	0.00	200			7/6/2006
14	01	1	103.82	103.82	1.24				
14	02	2	103.68	103.68	1.10	125	113.64	0.01	
14	05	5	103.62	103.62	1.04	120	115.38	0.01	
14	06	6	103.50	103.50	0.92	79	85.87	0.01	
14	09	9	103.11	103.11	0.53	90	169.81	0.01	
14	12	12	103.15	103.15	0.57				
14	14	14	103.21	103.21	0.63				
14	16	16	103.25	103.25	0.67	87	129.85	0.01	
14	18	18	103.22	103.22	0.64				
14	20	20	103.23	103.23	0.65	87	133.85	0.01	
14	25	25	103.18	103.18	0.60	100	166.67	0.01	
14	30	30	103.17	103.17	0.59	92	155.93	0.01	
14	35	35	103.15	103.15	0.57				
14	40	40	103.15	103.15	0.57	92	161.40	0.01	
14	42	42	104.12	104.12	1.54	150	97.40	0.01	Increase Q
14	44	44	104.15	104.15	1.57	150	95.54	0.01	
14	46	46	104.16	104.16	1.58	150	94.94	0.01	
14	50	50	104.14	104.14	1.56	150	96.15	0.01	
14	55	55	104.15	104.15	1.57	150	95.54	0.01	
15	00	60	104.12	104.12	1.54	150	97.40	0.01	
15	10	70	104.10	104.10	1.52	150	98.68	0.01	
15	20	80	104.10	104.10	1.52	150	98.68	0.01	
15	30	90	104.11	104.11	1.53	150	98.04	0.01	
15	55	115	104.10	104.10	1.52	150	98.68	0.01	
16	00	120	104.10	104.10	1.52	150	98.68	0.01	
16	30	150	104.10	104.10	1.52	150	98.68	0.01	
17	00	180	104.10	104.10	1.52	150	98.68	0.01	
17	30	210	104.10	104.10	1.52	150	98.68	0.01	
18	00	240	104.10	104.10	1.52	150	98.68	0.01	
18	30	270	104.10	104.10	1.52	150	98.68	0.01	

Aquifer Test Record - Constant Rate Test

Southwest Ground-water Consultants, Inc.

Date 7/6 - 7/7/2006

Well Number: MPE-1 **Job Title:** Mingus Panarama Estates

Job Number: B.1293 **Reported By:** ALD, DRE

Pumping Contractor:	NAPCO	Static Water Level:	102.58 ft bls
Foreman:	Marty	Measure Point:	Top of Sounder Tube
Bailer/pump size, capacity, make:		Stick Up:	+ 3.61 ft
Average Q:	150 gpm	Line Correction:	0 ft

Clock Time		Time Since Pump Start	Sounder Reading	Water Level	Draw down (s)	Dis-Charge (Q)	Specific Capacity	Specific Draw down	Remarks
hours	min	minutes	feet	feet	feet	gpm	gpm/ft	ft/gpm	
19	00	300	104.11	104.11	1.53	150	98.04	0.01	
19	30	360	104.12	104.12	1.54	150	97.40	0.01	
21	00	420	104.14	104.14	1.56	150	96.15	0.01	
22	00	480	104.12	104.12	1.54	150	97.40	0.01	
23	00	540	104.12	104.12	1.54	150	97.40	0.01	
00	00	600	104.11	104.11	1.53	150	98.04	0.01	
01	00	660	104.12	104.12	1.54	150	97.40	0.01	
02	00	720	104.13	104.13	1.55	150	96.77	0.01	
03	00	780	104.21	104.21	1.63	150	92.02	0.01	
04	00	840	104.23	104.23	1.65	150	90.91	0.01	
05	40	940	104.29	104.29	1.71	150	87.72	0.01	
07	20	1040	104.37	104.37	1.79	150	83.80	0.01	
09	00	1140	104.43	104.43	1.85	150	81.08	0.01	
10	40	1240	104.48	104.48	1.90	150	78.95	0.01	
12	20	1340	104.50	104.50	1.92	150	78.12	0.01	
14	00	1440	104.41	104.41	1.83	150	81.97	0.01	Average Q over test is
14	30	1470	104.43	104.43	1.85	150	81.08	0.01	147.3 gpm

Aquifer Test Record - Recovery

Southwest Ground-water Consultants, Inc.

Date 7/6 - 7/7/2006

Well Number: MPE-1 **Job Title:** Mingus Panarama Estates

Job Number: **Reported By:** ALD, DRE

Pumping Contractor:	NAPCO	Static Water Level:	102.58 ft bls
Foreman:	Marty	Measure Point:	Top of Sounder Tube
Bailer/pump size, capacity, make:	Submersible	Stick Up:	+ 3.61 ft
Average Q:	150 gpm	Line Correction:	0 ft

Clock Time		Time Since Pump Started (t)	Time Since Pump Stopped (t')	Ratio of t/t'	Sounder Reading	Water Level	Residual Drawdown (s')	REMARKS
hours	min	minutes	minutes		feet	feet	feet	
14	30	1470	0		104.43	104.43	1.85	7/7/2006
14	31	1471	1	1471.00	103.11	103.11	0.53	
14	40	1480	10	148.00	102.75	102.75	0.17	
14	45	1485	15	99.00	102.73	102.73	0.15	
14	50	1490	20	74.50	102.70	102.70	0.12	
14	55	1495	25	59.80	102.68	102.68	0.10	
15	00	1500	30	50.00	102.65	102.65	0.07	
15	05	1505	35	43.00	102.64	102.64	0.06	
15	10	1510	40	37.75	102.63	102.63	0.05	
15	15	1515	45	33.67	102.62	102.62	0.04	
15	20	1520	50	30.40	102.62	102.62	0.04	
15	30	1530	60	25.50	102.61	102.61	0.03	
15	40	1540	70	22.00	102.60	102.60	0.02	
15	50	1550	80	19.38	102.59	102.59	0.01	
16	00	1560	90	17.33	102.59	102.59	0.01	
16	10	1570	100	15.70	102.58	102.58	0.00	100% recovery

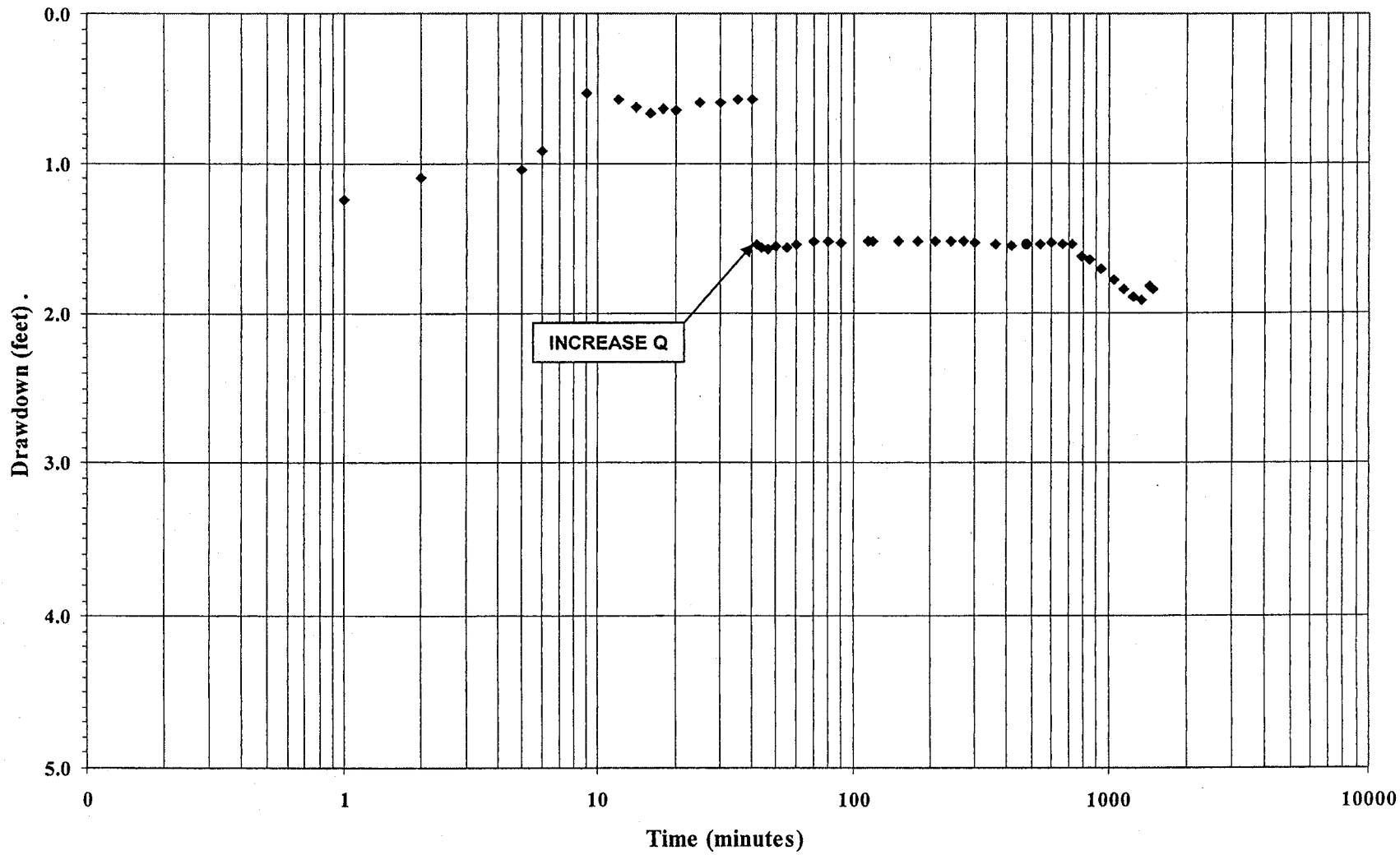

Southwest Ground-water Consultants, Inc.

August 3, 2006 Project B.1293

CONSTANT RATE - PUMPING TEST

Mingus Panorama Estates, Yavapai County, Arizona

Figure 7

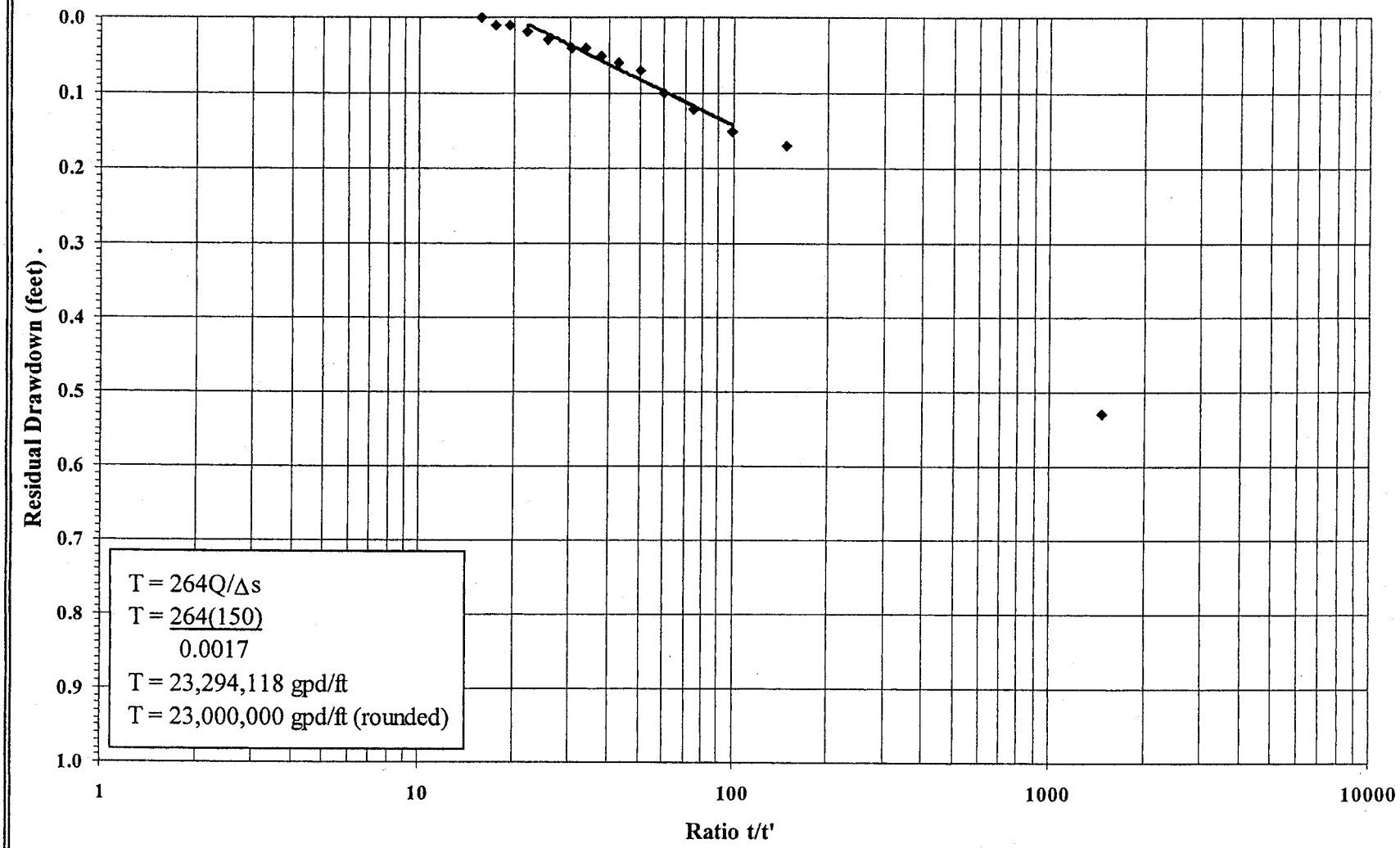

Southwest Ground-water Consultants, Inc.

August 3, 2006 **Project B.1293**

RECOVERY - PUMPING TEST

Mingus Panorama Estates, Yavapai County, Arizona

Figure 8

WATER QUALITY RESULTS

Northern Arizona Pump Co. P.O. Box 252 Comville, AZ 86325	Project: New Source Project Number: Mack Project Manager: Nathan White	Reported: 03/16/05 14:37

Mack (5020883-01) Drinking Water (Grab) Sampled: 02/16/05 11:00 Received: 02/17/05 08:45

Analyte	Result	RL	Units	Dilution	Batch	Prepared	Analyzed	Method	Notes
Radiation Safety Engineering #AZ0462									
Calculation									
Combined Radium	<0.4		pCi/L	1	NA	02/28/05	02/28/05	Calculation	
EPA 600/00-02									
Gross Alpha Activity	6.8 +/- 1.2		pCi/L	1	NA	02/23/05	02/23/05	EPA 600/00-02	
EPA 903.1									
Radium 226 Activity	<0.3		pCi/L	1	NA	02/28/05	02/28/05	EPA 903.1	
EPA 904.0									
Radium 228 Activity	<0.4		pCi/L	1	NA	02/28/05	02/28/05	EPA 904.0	
Pace Analytical Services #AZ0014									
EPA 1613B									
Dioxin	<0.000000005	0.000000005	mg/L	1	N/A	03/04/05	03/06/05	EPA 1613B	
Microbiology									
Total Coliforms	Absent		P/A	1	B502517	02/17/05	02/17/05	SM 9223B	
E. coli	Absent		P/A	1	B502517	02/17/05	02/17/05	SM 9223B	
Total Metals									
Antimony	<0.004	0.004	mg/L	1	B502642	02/23/05	02/24/05	EPA 200.9	
Arsenic	0.070	0.004	mg/L	1	B502642	02/23/05	02/25/05	EPA 200.9	
Barium	0.19	0.01	mg/L	1	B502647	02/23/05	02/23/05	EPA 200.7	
Beryllium	<0.002	0.002	mg/L	1	B502647	02/23/05	02/23/05	EPA 200.7	
Cadmium	<0.0002	0.0002	mg/L	1	B502642	02/23/05	02/25/05	EPA 200.9	
Calcium	164	1	mg/L	1	B502647	02/23/05	02/23/05	EPA 200.7	
Chromium	<0.005	0.005	mg/L	1	B502647	02/23/05	02/23/05	EPA 200.7	
Copper	0025 <0.01	0.01	mg/L	1	B502647	02/23/05	02/23/05	EPA 200.7	
Lead	RL 0.007	0.002	mg/L	1	B502642	02/23/05	02/25/05	EPA 200.9	
Magnesium	57	1	mg/L	1	B502647	02/23/05	03/01/05	EPA 200.7	
Mercury	<0.0002	0.0002	mg/L	1	B502481	02/18/05	02/18/05	EPA 245.1	
Nickel	<0.02	0.02	mg/L	1	B502647	02/23/05	02/23/05	EPA 200.7	
Selenium	0.002	0.002	mg/L	1	B502642	02/23/05	02/25/05	EPA 200.9	
Sodium	96	1	mg/L	1	B502647	02/23/05	02/23/05	EPA 200.7	
Thallium	<0.001	0.001	mg/L	1	B502642	02/23/05	02/23/05	EPA 200.9	
Calcium Hardness	410	2	mg/L	1	[CALC]	02/23/05	02/23/05	SM 2340B	
Magnesium Hardness	235	4	mg/L	1	[CALC]	02/23/05	03/01/05	SM 2340B	
Total Hardness	544	7	mg/L	1	[CALC]	02/23/05	03/01/05	SM 2340B	

Northern Arizona Pump Co. P.O. Box 252 Cornville, AZ 86325	Project: New Source Project Number: Mack Project Manager: Nathan White	Reported: 03/16/05 14:37

Mack (5020883-01) Drinking Water (Grab) Sampled: 02/16/05 11:00 Received: 02/17/05 08:45

Analyte	Result	RL	Units	Dilution	Batch	Prepared	Analyzed	Method	Notes
Inorganic Chemistry									
Total Alkalinity [(as CaCO3)]	733	10	mg/L	1	B502645	02/23/05	02/23/05	SM 2320 B	
Cyanide, total	<0.0097	0.0097	mg/L	1	B502695	02/24/05	02/25/05	SM 4500 CN E	
Fluoride	0.41	0.20	mg/L	1	B502478	02/18/05	02/18/05	SM 4500 F C	
Nitrate as N	<0.20	0.20	mg/L	1	[CALC]	02/22/05	02/22/05	Calculation	
Nitrate + Nitrite	0.19	0.10	mg/L	1	B502605	02/22/05	02/22/05	SM 4500 NO3 F	
Nitrite as N	<0.10	0.10	mg/L	1	B502464	02/17/05	02/17/05	SM 4500 NO2 B	
pH	6.8		pH Units	1	B502465	02/17/05	02/17/05	EPA 150.1	
Temperature	19.4		°C	1	B502465	02/17/05	02/17/05	EPA 150.1	
Sulfate	45.6	5.0	mg/L	10	B502495	02/17/05	02/17/05	EPA 300.0	
Total Dissolved Solids	836	1	mg/L	1	B502676	02/23/05	02/23/05	SM 2540 C	
Volatile Organic Compounds									Q3
Chloromethane [Methyl chloride]	<0.0005	0.0005	mg/L	1	B502618	02/22/05	02/22/05	EPA 524.2	
Vinyl chloride [Chloroethene]	<0.0005	0.0005	mg/L	1	B502618	02/22/05	02/22/05	EPA 524.2	
Bromomethane [Methyl bromide]	<0.0005	0.0005	mg/L	1	B502618	02/22/05	02/22/05	EPA 524.2	
Chloroethane	<0.0005	0.0005	mg/L	1	B502618	02/22/05	02/22/05	EPA 524.2	
1,1-Dichloroethene [1,1-Dichloroethylene]	<0.0005	0.0005	mg/L	1	B502618	02/22/05	02/22/05	EPA 524.2	
Dichloromethane [Methylene chloride]	<0.0005	0.0005	mg/L	1	B502618	02/22/05	02/22/05	EPA 524.2	
Methyl-tert-butyl ether [Methyl-t-butyl ether]	<0.0005	0.0005	mg/L	1	B502618	02/22/05	02/22/05	EPA 524.2	
trans-1,2-Dichloroethene [trans-1,2-Dichloroethylene]	<0.0005	0.0005	mg/L	1	B502618	02/22/05	02/22/05	EPA 524.2	
1,1-Dichloroethane	<0.0005	0.0005	mg/L	1	B502618	02/22/05	02/22/05	EPA 524.2	
cis-1,2-Dichloroethylene	<0.0005	0.0005	mg/L	1	B502618	02/22/05	02/22/05	EPA 524.2	
2,2-Dichloropropane	<0.0005	0.0005	mg/L	1	B502618	02/22/05	02/22/05	EPA 524.2	
Chloroform [Trichloromethane]	<0.0005	0.0005	mg/L	1	B502618	02/22/05	02/22/05	EPA 524.2	
1,1,1-Trichloroethane	<0.0005	0.0005	mg/L	1	B502618	02/22/05	02/22/05	EPA 524.2	
1,1-Dichloropropene	<0.0005	0.0005	mg/L	1	B502618	02/22/05	02/22/05	EPA 524.2	
Carbon tetrachloride [Tetrachloromethane]	<0.0005	0.0005	mg/L	1	B502618	02/22/05	02/22/05	EPA 524.2	
1,2-Dichloroethane	<0.0005	0.0005	mg/L	1	B502618	02/22/05	02/22/05	EPA 524.2	
Benzene	<0.0005	0.0005	mg/L	1	B502618	02/22/05	02/22/05	EPA 524.2	
Trichloroethene [Trichloroethylene]	<0.0005	0.0005	mg/L	1	B502618	02/22/05	02/22/05	EPA 524.2	
1,2-Dichloropropane	<0.0005	0.0005	mg/L	1	B502618	02/22/05	02/22/05	EPA 524.2	
Dibromomethane	<0.0005	0.0005	mg/L	1	B502618	02/22/05	02/22/05	EPA 524.2	
Bromodichloromethane [Dichlorobromomethane]	<0.0005	0.0005	mg/L	1	B502618	02/22/05	02/22/05	EPA 524.2	
cis-1,3-Dichloropropene	<0.0005	0.0005	mg/L	1	B502618	02/22/05	02/22/05	EPA 524.2	
Toluene	<0.0005	0.0005	mg/L	1	B502618	02/22/05	02/22/05	EPA 524.2	
trans-1,3-Dichloropropene	<0.0005	0.0005	mg/L	1	B502618	02/22/05	02/22/05	EPA 524.2	
1,1,2-Trichloroethane	<0.0005	0.0005	mg/L	1	B502618	02/22/05	02/22/05	EPA 524.2	
1,3-Dichloropropane	<0.0005	0.0005	mg/L	1	B502618	02/22/05	02/22/05	EPA 524.2	
Tetrachloroethene [Tetrachloroethylene]	<0.0005	0.0005	mg/L	1	B502618	02/22/05	02/22/05	EPA 524.2	
Dibromochloromethane	<0.0005	0.0005	mg/L	1	B502618	02/22/05	02/22/05	EPA 524.2	
Chlorobenzene [Monochlorobenzene]	<0.0005	0.0005	mg/L	1	B502618	02/22/05	02/22/05	EPA 524.2	
1,1,1,2-Tetrachloroethane	<0.0005	0.0005	mg/L	1	B502618	02/22/05	02/22/05	EPA 524.2	
Ethylbenzene	<0.0005	0.0005	mg/L	1	B502618	02/22/05	02/22/05	EPA 524.2	
m,p-Xylene	<0.0010	0.0010	mg/L	1	B502618	02/22/05	02/22/05	EPA 524.2	

Northern Arizona Pump Co. P.O. Box 252 Comville, AZ 86325	Project: New Source Project Number: Mack Project Manager: Nathan White	Reported: 03/16/05 14:37

Mack (5020883-01) Drinking Water (Grab) Sampled: 02/16/05 11:00 Received: 02/17/05 08:45

Analyte	Result	RL	Units	Dilution	Batch	Prepared	Analyzed	Method	Notes
Volatile Organic Compounds									Q3
o-Xylene	<0.0005	0.0005	mg/L	1	B502618	02/22/05	02/22/05	EPA 524.2	
Styrene	<0.0005	0.0005	mg/L	1	B502618	02/22/05	02/22/05	EPA 524.2	
Bromoform [Tribromomethane]	<0.0005	0.0005	mg/L	1	B502618	02/22/05	02/22/05	EPA 524.2	
1,1,2,2-Tetrachloroethane	<0.0005	0.0005	mg/L	1	B502618	02/22/05	02/22/05	EPA 524.2	
1,2,3-Trichloropropane	<0.0005	0.0005	mg/L	1	B502618	02/22/05	02/22/05	EPA 524.2	
Bromobenzene [Phenyl bromide]	<0.0005	0.0005	mg/L	1	B502618	02/22/05	02/22/05	EPA 524.2	
2-Chlorotoluene [o-Chlorotoluene]	<0.0005	0.0005	mg/L	1	B502618	02/22/05	02/22/05	EPA 524.2	
4-Chlorotoluene [p-Chlorotoluene]	<0.0005	0.0005	mg/L	1	B502618	02/22/05	02/22/05	EPA 524.2	
1,3-Dichlorobenzene [m-Dichlorobenzene]	<0.0005	0.0005	mg/L	1	B502618	02/22/05	02/22/05	EPA 524.2	
1,4-Dichlorobenzene [p-Dichlorobenzene]	<0.0005	0.0005	mg/L	1	B502618	02/22/05	02/22/05	EPA 524.2	
1,2-Dichlorobenzene [o-Dichlorobenzene]	<0.0005	0.0005	mg/L	1	B502618	02/22/05	02/22/05	EPA 524.2	
1,2,4-Trichlorobenzene	<0.0005	0.0005	mg/L	1	B502618	02/22/05	02/22/05	EPA 524.2	
Xylenes (total)	<0.0015	0.0015	mg/L	1	B502618	02/22/05	02/22/05	EPA 524.2	
Total THMs	<0.0020	0.0020	mg/L	1	B502618	02/22/05	02/22/05	EPA 524.2	
Surrogate: 1,2-Dichlorobenzene-d4		*98.5 %*		*70-130*	*B502618*	*02/22/05*	*02/22/05*	*EPA 524.2*	
Surrogate: 4-Bromofluorobenzene		*104 %*		*70-130*	*B502618*	*02/22/05*	*02/22/05*	*EPA 524.2*	
Surrogate: Pentafluorobenzene		*108 %*		*70-130*	*B502618*	*02/22/05*	*02/22/05*	*EPA 524.2*	
Miscellaneous									
Langlier Index	0.187	-5.00	N/A	1	B502620	02/23/05	02/23/05	Miscellaneous	
Fiberquant Analytical Services #AZ0633									
EPA 100.1									
Asbestos	<.7	.7	MFL	1	N/A	02/17/05	02/24/05	EPA 100.1	
Environmental Health Laboratories, UL #AZ0432									
EPA 504.1									
1,2-Dibromo-3-chloropropane (DBCP)	<0.00002	0.00002	mg/L	1	N/A	02/24/05	02/25/05	EPA 504.1	
Ethylene dibromide (EDB)	<0.00001	0.00001	mg/L	1	N/A	02/24/05	02/25/05	EPA 504.1	

Northern Arizona Pump Co. P.O. Box 252 Cornville, AZ 86325	Project: New Source Project Number: Mack Project Manager: Nathan White	Reported: 03/16/05 14:37

Mack (5020883-01) Drinking Water (Grab) Sampled: 02/16/05 11:00 Received: 02/17/05 08:45

Analyte	Result	RL	Units	Dilution	Batch	Prepared	Analyzed	Method	Notes
Environmental Health Laboratories, UL #AZ0432									
EPA 505									
Aroclor 1016	<0.00008	0.00008	mg/L	1	N/A	03/01/05	03/01/05	EPA 505	
Aroclor 1221	<0.02	0.02	mg/L	1	N/A	03/01/05	03/01/05	EPA 505	
Aroclor 1232	<0.0005	0.0005	mg/L	1	N/A	03/01/05	03/01/05	EPA 505	
Aroclor 1242	<0.0003	0.0003	mg/L	1	N/A	03/01/05	03/01/05	EPA 505	
Aroclor 1248	<0.0001	0.0001	mg/L	1	N/A	03/01/05	03/01/05	EPA 505	
Aroclor 1254	<0.0001	0.0001	mg/L	1	N/A	03/01/05	03/01/05	EPA 505	
Aroclor 1260	<0.0002	0.0002	mg/L	1	N/A	03/01/05	03/01/05	EPA 505	
Chlordane	<0.0002	0.0002	mg/L	1	N/A	03/01/05	03/01/05	EPA 505	
Toxaphene	<0.001	0.001	mg/L	1	N/A	03/01/05	03/01/05	EPA 505	
EPA 515.3									
2,4,5-TP (Silvex)	<0.0002	0.0002	mg/L	1	N/A	02/22/05	02/23/05	EPA 515.3	
2,4-D	<0.0001	0.0001	mg/L	1	N/A	02/22/05	02/23/05	EPA 515.3	
Dalapon	<0.001	0.001	mg/L	1	N/A	02/22/05	02/23/05	EPA 515.3	
Dicamba	<0.0001	0.0001	mg/L	1	N/A	02/22/05	02/23/05	EPA 515.3	
Dinoseb	<0.0002	0.0002	mg/L	1	N/A	02/22/05	02/23/05	EPA 515.3	
Pentachlorophenol	<0.00004	0.00004	mg/L	1	N/A	02/22/05	02/23/05	EPA 515.3	
Picloram (Tordon)	<0.0001	0.0001	mg/L	1	N/A	02/22/05	02/23/05	EPA 515.3	
EPA 525.2									
Alachlor (Lasso)	<0.0002	0.0002	mg/L	1	N/A	02/22/05	02/25/05	EPA 525.2	
Aldrin	<0.0001	0.0001	mg/L	1	N/A	02/22/05	02/25/05	EPA 525.2	
Atrazine	<0.0001	0.0001	mg/L	1	N/A	02/22/05	02/25/05	EPA 525.2	
Benzo(a)pyrene	<0.00002	0.00002	mg/L	1	N/A	02/22/05	02/25/05	EPA 525.2	
Butachlor	<0.0001	0.0001	mg/L	1	N/A	02/22/05	02/25/05	EPA 525.2	
Di(2-ethylhexyl) adipate	<0.0006	0.0006	mg/L	1	N/A	02/22/05	02/25/05	EPA 525.2	
Di(2-ethylhexyl) phthalate	<0.0006	0.0006	mg/L	1	N/A	02/22/05	02/25/05	EPA 525.2	
Dieldrin	<0.0001	0.0001	mg/L	1	N/A	02/22/05	02/25/05	EPA 525.2	
Endrin	<0.00001	0.00001	mg/L	1	N/A	02/22/05	02/25/05	EPA 525.2	
Heptachlor	<0.00004	0.00004	mg/L	1	N/A	02/22/05	02/25/05	EPA 525.2	
Heptachlor epoxide	<0.00002	0.00002	mg/L	1	N/A	02/22/05	02/25/05	EPA 525.2	
Hexachlorobenzene	<0.0001	0.0001	mg/L	1	N/A	02/22/05	02/25/05	EPA 525.2	
Hexachlorocyclopentadiene	<0.0001	0.0001	mg/L	1	N/A	02/22/05	02/25/05	EPA 525.2	
Lindane (gamma-BHC)	<0.00002	0.00002	mg/L	1	N/A	02/22/05	02/25/05	EPA 525.2	
Methoxychlor	<0.0001	0.0001	mg/L	1	N/A	02/22/05	02/25/05	EPA 525.2	
Metolachlor (Dual)	<0.0001	0.0001	mg/L	1	N/A	02/22/05	02/25/05	EPA 525.2	
Metribuzin (Sencor)	<0.0001	0.0001	mg/L	1	N/A	02/22/05	02/25/05	EPA 525.2	
Propachlor	<0.0001	0.0001	mg/L	1	N/A	02/22/05	02/25/05	EPA 525.2	
Simazine	<0.00007	0.00007	mg/L	1	N/A	02/22/05	02/25/05	EPA 525.2	

Northern Arizona Pump Co. P.O. Box 252 Cornville, AZ 86325	Project: New Source Project Number: Mack Project Manager: Nathan White	Reported: 03/16/05 14:37

Mack (5020883-01) Drinking Water (Grab) Sampled: 02/16/05 11:00 Received: 02/17/05 08:45

Analyte	Result	RL	Units	Dilution	Batch	Prepared	Analyzed	Method	Notes
Environmental Health Laboratories, UL #AZ0432									
EPA 531.1									
3-Hydroxycarbofuran	<0.0005	0.0005	mg/L	1	N/A	02/21/05	02/22/05	EPA 531.1	
Aldicarb	<0.0005	0.0005	mg/L	1	N/A	02/21/05	02/22/05	EPA 531.1	
Aldicarb Sulfone	<0.0008	0.0008	mg/L	1	N/A	02/21/05	02/22/05	EPA 531.1	
Aldicarb Sulfoxide	<0.0005	0.0005	mg/L	1	N/A	02/21/05	02/22/05	EPA 531.1	
Carbary	<0.0005	0.0005	mg/L	1	N/A	02/21/05	02/22/05	EPA 531.1	
Carbofuran	<0.0009	0.0009	mg/L	1	N/A	02/21/05	02/22/05	EPA 531.1	
Methomyl	<0.0005	0.0005	mg/L	1	N/A	02/21/05	02/22/05	EPA 531.1	
Oxamyl (Vydate)	<0.002	0.002	mg/L	1	N/A	02/21/05	02/22/05	EPA 531.1	
EPA 548.1									
Endothall	<0.009	0.009	mg/L	1	N/A	02/19/05	02/21/05	EPA 548.1	
EPA 549.2									
Diquat	<0.0006	0.0004	mg/L	1.541	N/A	02/22/05	02/23/05	EPA 549.2	

Northern Arizona Pump Co. P.O. Box 252 Cornville, AZ 86325	Project: New Source Project Number: Mack Project Manager: Nathan White	Reported: 03/16/05 14:37

Microbiology - Quality Control

Legend Technical Services of Arizona, Inc.

Analyte	Result	Reporting Limit	Units	Spike Level	Source Result	%REC	%REC Limits	RPD	RPD Limit	Notes
Batch B502517 - micro_prep										
Blank (B502517-BLK1)				*Prepared & Analyzed: 02/17/05*						
Total Coliforms	Absent		P/A							
E. coli	Absent		P/A							

Northern Arizona Pump Co. P.O. Box 252 Comville, AZ 86325	Project: New Source Project Number: Mack Project Manager: Nathan White	Reported: 03/16/05 14:37

Total Metals - Quality Control

Legend Technical Services of Arizona, Inc.

Analyte	Result	Reporting Limit	Units	Spike Level	Source Result	%REC	%REC Limits	RPD	RPD Limit	Notes
Batch B502481 - EPA 245.1/245.2 Prep										
Blank (B502481-BLK1)				*Prepared & Analyzed: 02/18/05*						
Mercury	<0.0002	0.0002	mg/L							
LCS (B502481-BS1)				*Prepared & Analyzed: 02/18/05*						
Mercury	0.0010	0.0002	mg/L	0.00100		100	85-115			
Matrix Spike (B502481-MS1)		Source: 5020583-02		*Prepared & Analyzed: 02/18/05*						
Mercury	0.0010	0.0002	mg/L	0.00100	<0.0002	100	30-130			
Matrix Spike (B502481-MS2)		Source: 5020883-01		*Prepared & Analyzed: 02/18/05*						
Mercury	0.0010	0.0002	mg/L	0.00100	<0.0002	100	30-130			
Matrix Spike Dup (B502481-MSD1)		Source: 5020583-02		*Prepared & Analyzed: 02/18/05*						
Mercury	0.0010	0.0002	mg/L	0.00100	<0.0002	100	30-130	0.00	25	
Matrix Spike Dup (B502481-MSD2)		Source: 5020883-01		*Prepared & Analyzed: 02/18/05*						
Mercury	0.0010	0.0002	mg/L	0.00100	<0.0002	100	30-130	0.00	25	
Batch B502642 - EPA 200.9										
Blank (B502642-BLK1)				*Prepared: 02/23/05 Analyzed: 02/25/05*						
Arsenic	<0.002	0.002	mg/L							
Antimony	<0.004	0.004	mg/L							
Lead	<0.002	0.002	mg/L							
Cadmium	<0.0002	0.0002	mg/L							
Thallium	<0.001	0.001	mg/L							
Selenium	<0.002	0.002	mg/L							

Northern Arizona Pump Co.	Project: New Source	
P.O. Box 252	Project Number: Mack	Reported:
Comville, AZ 86325	Project Manager: Nathan White	03/16/05 14:37

Total Metals - Quality Control

Legend Technical Services of Arizona, Inc.

Analyte	Result	Reporting Limit	Units	Spike Level	Source Result	%REC	%REC Limits	RPD	RPD Limit	Notes
Batch B502642 - EPA 200.9										
LCS (B502642-BS1)				*Prepared: 02/23/05*		*Analyzed: 02/25/05*				
Arsenic	0.021		mg/L	0.0200		105	85-115			
Antimony	0.011		mg/L	0.0100		110	85-115			
Thallium	0.010		mg/L	0.0100		100	85-115			
Cadmium	0.0022		mg/L	0.00200		110	85-115			
Selenium	0.022		mg/L	0.0200		110	85-115			
Lead	0.022		mg/L	0.0200		110	85-115			
Matrix Spike (B502642-MS1)		**Source: 5020968-01**		*Prepared: 02/23/05*		*Analyzed: 02/25/05*				
Arsenic	0.022		mg/L	0.0200	0.00300	95.0	70-130			
Cadmium	0.0021		mg/L	0.00200	<	105	70-130			
Antimony	0.011		mg/L	0.0100	<	110	70-130			
Lead	0.020		mg/L	0.0200	<	100	70-130			
Thallium	0.010		mg/L	0.0100	<	100	70-130			
Selenium	0.022		mg/L	0.0200	0.00300	95.0	70-130			
Matrix Spike (B502642-MS2)		**Source: 5020946-16**		*Prepared: 02/23/05*		*Analyzed: 02/25/05*				
Lead	0.022		mg/L	0.0200	<	110	70-130			
Selenium	0.023		mg/L	0.0200	<	115	70-130			
Arsenic	0.021		mg/L	0.0200	<	105	70-130			
Cadmium	0.0024		mg/L	0.00200	<	120	70-130			
Matrix Spike Dup (B502642-MSD1)		**Source: 5020968-01**		*Prepared: 02/23/05*		*Analyzed: 02/25/05*				
Lead	0.021		mg/L	0.0200	<	105	70-130	4.88	25	
Selenium	0.022		mg/L	0.0200	0.00300	95.0	70-130	0.00	25	
Antimony	0.011		mg/L	0.0100	<	110	70-130	0.00	25	
Cadmium	0.0022		mg/L	0.00200	<	110	70-130	4.65	25	
Arsenic	0.022		mg/L	0.0200	0.00300	95.0	70-130	0.00	25	
Thallium	0.011		mg/L	0.0100	<	110	70-130	9.52	25	

Northern Arizona Pump Co.	Project: New Source	
P.O. Box 252	Project Number: Mack	Reported:
Cornville, AZ 86325	Project Manager: Nathan White	03/16/05 14:37

Total Metals - Quality Control

Legend Technical Services of Arizona, Inc.

Analyte	Result	Reporting Limit	Units	Spike Level	Source Result	%REC	%REC Limits	RPD	RPD Limit	Notes
Batch B502642 - EPA 200.9										
Matrix Spike Dup (B502642-MSD2)		**Source: 5020946-16**		*Prepared: 02/23/05 Analyzed: 02/25/05*						
Cadmium	0.0020		mg/L	0.00200	<	100	70-130	18.2	25	
Lead	0.020		mg/L	0.0200	<	100	70-130	9.52	25	
Arsenic	0.019		mg/L	0.0200	<	95.0	70-130	10.0	25	
Selenium	0.019		mg/L	0.0200	<	95.0	70-130	19.0	25	
Batch B502647 - Default Prep Metals										
Blank (B502647-BLK1)				*Prepared & Analyzed: 02/23/05*						
Calcium	<1	1	mg/L							
Sodium	<1	1	mg/L							
Chromium	<0.005	0.005	mg/L							
Barium	<0.01	0.01	mg/L							
Copper	<0.01	0.01	mg/L							
Beryllium	<0.002	0.002	mg/L							
Magnesium	<1	1	mg/L							
Nickel	<0.02	0.02	mg/L							
LCS (B502647-BS1)				*Prepared & Analyzed: 02/23/05*						
Barium	1.03		mg/L	1.00		103	85-115			
Sodium	19		mg/L	20.0		95.0	85-115			
Calcium	21		mg/L	20.0		105	85-115			
Chromium	0.500		mg/L	0.500		100	85-115			
Copper	0.97		mg/L	1.00		97.0	85-115			
Beryllium	0.198		mg/L	0.200		99.0	85-115			
Magnesium	20		mg/L	20.0		100	85-115			
Nickel	0.98		mg/L	1.00		98.0	85-115			

Northern Arizona Pump Co. P.O. Box 252 Cornville, AZ 86325	Project: New Source Project Number: Mack Project Manager: Nathan White	Reported: 03/16/05 14:37

Total Metals - Quality Control

Legend Technical Services of Arizona, Inc.

Analyte	Result	Reporting Limit	Units	Spike Level	Source Result	%REC	%REC Limits	RPD	RPD Limit	Notes
Batch B502647 - Default Prep Metals										
Matrix Spike (B502647-MS1)		Source: 5020877-01		*Prepared: 02/23/05 Analyzed: 03/01/05*						
Magnesium	28		mg/L	20.0	9.00	95.0	70-130			
Beryllium	0.198		mg/L	0.200	<	99.0	70-130			
Nickel	0.95		mg/L	1.00	<	95.0	75-125			
Sodium	92		mg/L	20.0	74.0	90.0	75-125			
Barium	0.97		mg/L	1.00	0.00500	96.5	70-130			
Calcium	30		mg/L	20.0	10.0	100	70-130			
Chromium	0.547		mg/L	0.500	0.0630	96.8	70-130			
Copper	0.92		mg/L	1.00	<	92.0	70-130			
Matrix Spike (B502647-MS2)		Source: 5020877-06		*Prepared & Analyzed: 02/23/05*						
Copper	0.95		mg/L	1.00	<	95.0	70-130			
Matrix Spike Dup (B502647-MSD1)		Source: 5020877-01		*Prepared & Analyzed: 02/23/05*						
Barium	0.97		mg/L	1.00	0.00500	96.5	70-130	0.00	25	
Nickel	0.96		mg/L	1.00	<	96.0	75-125	1.05	20	
Beryllium	0.200		mg/L	0.200	<	100	70-130	1.01	25	
Magnesium	28		mg/L	20.0	9.00	95.0	70 130	0.00	25	
Copper	0.93		mg/L	1.00	<	93.0	70-130	1.08	25	
Sodium	95		mg/L	20.0	74.0	105	75-125	3.21	20	
Chromium	0.554		mg/L	0.500	0.0630	98.2	70-130	1.27	25	
Calcium	30		mg/L	20.0	10.0	100	70-130	0.00	25	
Matrix Spike Dup (B502647-MSD2)		Source: 5020877-06		*Prepared & Analyzed: 02/23/05*						
Copper	0.94		mg/L	1.00	<	94.0	70-130	1.06	25	

Northern Arizona Pump Co. P.O. Box 252 Cornville, AZ 86325	Project: New Source Project Number: Mack Project Manager: Nathan White	Reported: 03/16/05 14:37

Inorganic Chemistry - Quality Control

Legend Technical Services of Arizona, Inc.

Analyte	Result	Reporting Limit	Units	Spike Level	Source Result	%REC	%REC Limits	RPD	RPD Limit	Notes
Batch B502478 - NO PREP										
Matrix Spike (B502478-MS1)		**Source: 5020652-01**		*Prepared & Analyzed: 02/18/05*						
Fluoride	3.10	0.20	mg/L	3.00	<0.20	103	80-120			
Matrix Spike (B502478-MS2)		**Source: 5020883-01**		*Prepared & Analyzed: 02/18/05*						
Fluoride	3.60	0.20	mg/L	3.00	0.41	106	80-120			
Matrix Spike Dup (B502478-MSD1)		**Source: 5020652-01**		*Prepared & Analyzed: 02/18/05*						
Fluoride	3.16	0.20	mg/L	3.00	<0.20	105	80-120	1.92	25	
Matrix Spike Dup (B502478-MSD2)		**Source: 5020883-01**		*Prepared & Analyzed: 02/18/05*						
Fluoride	3.63	0.20	mg/L	3.00	0.41	107	80-120	0.939	25	
Batch B502495 - Default Prep GenChem										
Blank (B502495-BLK1)				*Prepared & Analyzed: 02/17/05*						
Sulfate	<0.5	0.5	mg/L							
LCS (B502495-BS1)				*Prepared & Analyzed: 02/17/05*						
Sulfate	45.9	0.5	mg/L	50.0		91.8	80-120			
LCS Dup (B502495-BSD1)				*Prepared & Analyzed: 02/17/05*						
Sulfate	50.0	0.5	mg/L	50.0		100	80-120	8.55	25	
Matrix Spike (B502495-MS1)		**Source: 5020781-02**		*Prepared & Analyzed: 02/17/05*						
Sulfate	52.3	0.5	mg/L	40.0	11.3	102	80-120			
Matrix Spike Dup (B502495-MSD1)		**Source: 5020781-02**		*Prepared & Analyzed: 02/17/05*						
Sulfate	47.7	0.5	mg/L	40.0	11.3	91.0	80-120	11.4	25	

Northern Arizona Pump Co.	Project: New Source	
P.O. Box 252	Project Number: Mack	Reported:
Cornville, AZ 86325	Project Manager: Nathan White	03/16/05 14:37

Inorganic Chemistry - Quality Control

Legend Technical Services of Arizona, Inc.

Analyte	Result	Reporting Limit	Units	Spike Level	Source Result	%REC	%REC Limits	RPD	RPD Limit	Notes
Batch B502605 - Default Prep GenChem										
Blank (B502605-BLK1)				*Prepared & Analyzed: 02/22/05*						
Nitrate + Nitrite	<0.10	0.10	mg/L							
LCS (B502605-BS1)				*Prepared & Analyzed: 02/22/05*						
Nitrate + Nitrite	9.90	0.10	mg/L	10.0		99.0	80-120			
LCS Dup (B502605-BSD1)				*Prepared & Analyzed: 02/22/05*						
Nitrate + Nitrite	9.92	0.10	mg/L	10.0		99.2	80-120	0.202	25	
Matrix Spike (B502605-MS1)		Source: 5020788-01		*Prepared & Analyzed: 02/22/05*						
Nitrate + Nitrite	19.5	0.10	mg/L	10.0	12.5	70.0	80-120			M2
Matrix Spike (B502605-MS2)		Source: 5020856-02		*Prepared & Analyzed: 02/22/05*						
Nitrate + Nitrite	18.2	0.10	mg/L	10.0	11.2	70.0	80-120			M2
Matrix Spike Dup (B502605-MSD1)		Source: 5020788-01		*Prepared & Analyzed: 02/22/05*						
Nitrate + Nitrite	19.6	0.10	mg/L	10.0	12.5	71.0	80-120	1.42	25	M2
Matrix Spike Dup (B502605-MSD2)		Source: 5020856-02		*Prepared & Analyzed: 02/22/05*						
Nitrate + Nitrite	18.0	0.10	mg/L	10.0	11.2	68.0	80-120	2.90	25	M2
Batch B502645 - NO PREP										
Blank (B502645-BLK1)				*Prepared & Analyzed: 02/23/05*						
Total Alkalinity	<10	10	mg/L							
Blank (B502645-BLK2)				*Prepared & Analyzed: 02/23/05*						
Total Alkalinity	<10	10	mg/L							

Northern Arizona Pump Co. P.O. Box 252 Cornville, AZ 86325	Project: New Source Project Number: Mack Project Manager: Nathan White	Reported: 03/16/05 14:37

Inorganic Chemistry - Quality Control

Legend Technical Services of Arizona, Inc.

Analyte	Result	Reporting Limit	Units	Spike Level	Source Result	%REC	%REC Limits	RPD	RPD Limit	Notes
Batch B502645 - NO PREP										
LCS (B502645-BS1)				*Prepared & Analyzed: 02/23/05*						
Total Alkalinity	190	10	mg/L	200		95.0	47-153			
LCS Dup (B502645-BSD1)				*Prepared & Analyzed: 02/23/05*						
Total Alkalinity	190	10	mg/L	200		95.0	47-153	0.00	25	
Matrix Spike (B502645-MS1)		Source: 5020809-03		*Prepared & Analyzed: 02/23/05*						
Total Alkalinity	673	10	mg/L	200	520	76.5	80-120			M2
Matrix Spike (B502645-MS2)		Source: 5020955-03		*Prepared & Analyzed: 02/23/05*						
Total Alkalinity	235	10	mg/l	200	117	59.0	80-120			M2
Matrix Spike Dup (B502645-MSD1)		Source: 5020809-03		*Prepared & Analyzed: 02/23/05*						
Total Alkalinity	672	10	mg/L	200	520	76.0	80-120	0.149	25	M2
Matrix Spike Dup (B502645-MSD2)		Source: 5020955-03		*Prepared & Analyzed: 02/23/05*						
Total Alkalinity	243	10	mg/L	200	117	63.0	80-120	3.35	25	M2
Batch B502676 - NO PREP										
Blank (B502676-BLK1)				*Prepared & Analyzed: 02/23/05*						
Total Dissolved Solids	0	1	mg/L							
Duplicate (B502676-DUP1)		Source: 5020947-04		*Prepared & Analyzed: 02/23/05*						
Total Dissolved Solids	168	1	mg/L		167			0.597	5	
Duplicate (B502676-DUP2)		Source: 5021001-02		*Prepared & Analyzed: 02/23/05*						
Total Dissolved Solids	848	1	mg/L		844			0.473	5	

Northern Arizona Pump Co. P.O. Box 252 Cornville, AZ 86325	Project: New Source Project Number: Mack Project Manager: Nathan White	Reported: 03/16/05 14:37

Inorganic Chemistry - Quality Control

Legend Technical Services of Arizona, Inc.

Analyte	Result	Reporting Limit	Units	Spike Level	Source Result	%REC	%REC Limits	RPD	RPD Limit	Notes
Batch B502676 - NO PREP										
Duplicate (B502676-DUP3)		Source: 5021019-02		*Prepared & Analyzed: 02/23/05*						
Total Dissolved Solids	796		mg/L		768			3.58	5	
Batch B502695 - NO PREP										
Blank (B502695-BLK1)				*Prepared: 02/24/05 Analyzed: 02/25/05*						
Cyanide, total	<0.0097	0.0097	mg/L							
Blank (B502695-BLK2)				*Prepared: 02/24/05 Analyzed: 02/25/05*						
Cyanide, total	<0.0097	0.0097	mg/L							
LCS (B502695-BS1)				*Prepared: 02/24/05 Analyzed: 02/25/05*						
Cyanide, total	0.0500	0.0097	mg/L	0.0500		100	80-120			
LCS Dup (B502695-BSD1)				*Prepared: 02/24/05 Analyzed: 02/25/05*						
Cyanide, total	0.0500	0.0097	mg/L	0.0500		100	80-120	0.00	25	
Matrix Spike (B502695-MS1)		Source: 5020986-02		*Prepared: 02/24/05 Analyzed: 02/25/05*						
Cyanide, total	0.0520	0.0097	mg/L	0.0500	<0.0097	104	80-120			
Matrix Spike (B502695-MS2)		Source: 5021140-01		*Prepared: 02/24/05 Analyzed: 02/25/05*						
Cyanide, total	0.0190	0.0097	mg/L	0.0500	<0.0097	38.0	80-120			M2
Matrix Spike Dup (B502695-MSD1)		Source: 5020986-02		*Prepared: 02/24/05 Analyzed: 02/25/05*						
Cyanide, total	0.0520	0.0097	mg/L	0.0500	<0.0097	104	80-120	0.00	25	
Matrix Spike Dup (B502695-MSD2)		Source: 5021140-01		*Prepared: 02/24/05 Analyzed: 02/25/05*						
Cyanide, total	0.0190	0.0097	mg/L	0.0500	<0.0097	38.0	80-120	0.00	25	M2

Northern Arizona Pump Co. P.O. Box 252 Cornville, AZ 86325	Project: New Source Project Number: Mack Project Manager: Nathan White	Reported: 03/16/05 14:37

Volatile Organic Compounds - Quality Control

Legend Technical Services of Arizona, Inc.

Analyte	Result	Reporting Limit	Units	Spike Level	Source Result	%REC	%REC Limits	RPD	RPD Limit	Notes
Batch B502618 - Default Prep VOC										
Blank (B502618-BLK1)				*Prepared & Analyzed: 02/22/05*						
Chloromethane	<0.0005	0.0005	mg/L							
Vinyl chloride	<0.0005	0.0005	mg/L							
Bromomethane	<0.0005	0.0005	mg/L							
Chloroethane	<0.0005	0.0005	mg/L							
1,1-Dichloroethene	<0.0005	0.0005	mg/L							
Dichloromethane	<0.0005	0.0005	mg/L							
Methyl-tert-butyl ether	<0.0005	0.0005	mg/L							
trans-1,2-Dichloroethene	<0.0005	0.0005	mg/L							
1,1-Dichloroethane	<0.0005	0.0005	mg/L							
cis-1,2-Dichloroethylene	<0.0005	0.0005	mg/L							
2,2-Dichloropropane	<0.0005	0.0005	mg/L							
Chloroform	<0.0005	0.0005	mg/L							
1,1,1-Trichloroethane	<0.0005	0.0005	mg/L							
1,1-Dichloropropene	<0.0005	0.0005	mg/L							
Carbon tetrachloride	<0.0005	0.0005	mg/L							
1,2-Dichloroethane	<0.0005	0.0005	mg/L							
Benzene	<0.0005	0.0005	mg/L							
Trichloroethene	<0.0005	0.0005	mg/L							
1,2-Dichloropropane	<0.0005	0.0005	mg/L							
Dibromomethane	<0.0005	0.0005	mg/L							
Bromodichloromethane	<0.0005	0.0005	mg/L							
cis-1,3-Dichloropropene	<0.0005	0.0005	mg/L							
Toluene	<0.0005	0.0005	mg/L							
trans-1,3-Dichloropropene	<0.0005	0.0005	mg/L							
1,1,2-Trichloroethane	<0.0005	0.0005	mg/L							
1,3-Dichloropropane	<0.0005	0.0005	mg/L							
Tetrachloroethene	<0.0005	0.0005	mg/L							
Dibromochloromethane	<0.0005	0.0005	mg/L							
Chlorobenzene	<0.0005	0.0005	mg/L							
1,1,1,2-Tetrachloroethane	<0.0005	0.0005	mg/L							
Ethylbenzene	<0.0005	0.0005	mg/L							
m,p-Xylene	<0.0010	0.0010	mg/L							
o-Xylene	<0.0005	0.0005	mg/L							
Styrene	<0.0005	0.0005	mg/L							
Bromoform	<0.0005	0.0005	mg/L							
1,1,2,2-Tetrachloroethane	<0.0005	0.0005	mg/L							
1,2,3-Trichloropropane	<0.0005	0.0005	mg/L							
Bromobenzene	<0.0005	0.0005	mg/L							
2-Chlorotoluene	<0.0005	0.0005	mg/L							
4-Chlorotoluene	<0.0005	0.0005	mg/L							
1,3-Dichlorobenzene	<0.0005	0.0005	mg/L							
1,4-Dichlorobenzene	<0.0005	0.0005	mg/L							
1,2-Dichlorobenzene	<0.0005	0.0005	mg/L							
1,2,4-Trichlorobenzene	<0.0005	0.0005	mg/L							
Xylenes (total)	<0.0015	0.0015	mg/L							
Total THMs	<0.0020	0.0020	mg/L							

Northern Arizona Pump Co. P.O. Box 252 Cornville, AZ 86325	Project: New Source Project Number: Mack Project Manager: Nathan White	Reported: 03/16/05 14:37

Volatile Organic Compounds - Quality Control

Legend Technical Services of Arizona, Inc.

Analyte	Result	Reporting Limit	Units	Spike Level	Source Result	%REC	%REC Limits	RPD	RPD Limit	Notes
Batch B502618 - Default Prep VOC										
LCS (B502618-BS1)				*Prepared & Analyzed: 02/22/05*						
Chloromethane	0.0016	0.0005	mg/L	0.00200		80.0	70-130			
Vinyl chloride	0.0020	0.0005	mg/L	0.00200		100	70-130			
Bromomethane	0.0021	0.0005	mg/L	0.00200		105	70-130			
Chloroethane	0.0018	0.0005	mg/L	0.00200		90.0	70-130			
1,1-Dichloroethene	0.0019	0.0005	mg/L	0.00200		95.0	70-130			
Dichloromethane	0.0019	0.0005	mg/L	0.00200		95.0	70-130			
Methyl-tert-butyl ether	0.0017	0.0005	mg/L	0.00200		85.0	70-130			
trans-1,2-Dichloroethene	0.0019	0.0005	mg/L	0.00200		95.0	70-130			
1,1-Dichloroethane	0.0019	0.0005	mg/L	0.00200		95.0	70-130			
cis-1,2-Dichloroethylene	0.0018	0.0005	mg/L	0.00200		90.0	70-130			
2,2-Dichloropropane	0.0017	0.0005	mg/L	0.00200		85.0	70-130			
Chloroform	0.0019	0.0005	mg/L	0.00200		95.0	70-130			
1,1,1-Trichloroethane	0.0019	0.0005	mg/L	0.00200		95.0	70-130			
1,1-Dichloropropene	0.0018	0.0005	mg/L	0.00200		90.0	70-130			
Carbon tetrachloride	0.0018	0.0005	mg/L	0.00200		90.0	70-130			
1,2-Dichloroethane	0.0018	0.0005	mg/L	0.00200		90.0	70-130			
Benzene	0.0019	0.0005	mg/L	0.00200		95.0	70-130			
Trichloroethene	0.0018	0.0005	mg/l	0.00200		90.0	70-130			
1,2-Dichloropropane	0.0018	0.0005	mg/L	0.00200		90.0	70-130			
Dibromomethane	0.0018	0.0005	mg/L	0.00200		90.0	70-130			
Bromodichloromethane	0.0018	0.0005	mg/L	0.00200		90.0	70-130			
cis-1,3-Dichloropropene	0.0017	0.0005	mg/L	0.00200		85.0	70-130			
Toluene	0.0018	0.0005	mg/L	0.00200		90.0	70-130			
trans-1,3-Dichloropropene	0.0017	0.0005	mg/L	0.00200		85.0	70-130			
1,1,2-Trichloroethane	0.0018	0.0005	mg/L	0.00200		90.0	70-130			
1,3-Dichloropropane	0.0018	0.0005	mg/L	0.00200		90.0	70-130			
Tetrachloroethene	0.0019	0.0005	mg/L	0.00200		95.0	70-130			
Dibromochloromethane	0.0017	0.0005	mg/L	0.00200		85.0	70-130			
Chlorobenzene	0.0019	0.0005	mg/L	0.00200		95.0	70-130			
1,1,1,2-Tetrachloroethane	0.0018	0.0005	mg/L	0.00200		90.0	70-130			
Ethylbenzene	0.0019	0.0005	mg/L	0.00200		95.0	70-130			
m,p-Xylene	0.0038	0.0010	mg/L	0.00400		95.0	70-130			
o-Xylene	0.0019	0.0005	mg/L	0.00200		95.0	70-130			
Styrene	0.0018	0.0005	mg/L	0.00200		90.0	70-130			
Bromoform	0.0018	0.0005	mg/L	0.00200		90.0	70-130			
1,1,2,2-Tetrachloroethane	0.0018	0.0005	mg/L	0.00200		90.0	70-130			
1,2,3-Trichloropropane	0.0019	0.0005	mg/L	0.00200		95.0	70-130			
Bromobenzene	0.0019	0.0005	mg/L	0.00200		95.0	70-130			
2-Chlorotoluene	0.0019	0.0005	mg/L	0.00200		95.0	70-130			
4-Chlorotoluene	0.0018	0.0005	mg/L	0.00200		90.0	70-130			
1,3-Dichlorobenzene	0.0019	0.0005	mg/L	0.00200		95.0	70-130			
1,4-Dichlorobenzene	0.0019	0.0005	mg/L	0.00200		95.0	70-130			
1,2-Dichlorobenzene	0.0019	0.0005	mg/L	0.00200		95.0	70-130			
1,2,4-Trichlorobenzene	0.0017	0.0005	mg/L	0.00200		85.0	70-130			
Xylenes (total)	0.0057	0.0015	mg/L	0.00600		95.0	70-130			
Total THMs	0.0072	0.0020	mg/L	0.00800		90.0	70-130			

Northern Arizona Pump Co.	Project: New Source	
P.O. Box 252	Project Number: Mack	Reported:
Cornville, AZ 86325	Project Manager: Nathan White	03/16/05 14:37

Volatile Organic Compounds - Quality Control

Legend Technical Services of Arizona, Inc.

Analyte	Result	Reporting Limit	Units	Spike Level	Source Result	%REC	%REC Limits	RPD	RPD Limit	Notes
Batch B502618 - Default Prep VOC										
LCS Dup (B502618-BSD1)				*Prepared & Analyzed: 02/22/05*						
Chloromethane	0.0017	0.0005	mg/L	0.00200		85.0	70-130	6.06	25	
Vinyl chloride	0.0020	0.0005	mg/L	0.00200		100	70-130	0.00	25	
Bromomethane	0.0020	0.0005	mg/L	0.00200		100	70-130	4.88	25	
Chloroethane	0.0020	0.0005	mg/L	0.00200		100	70-130	10.5	25	
1,1-Dichloroethene	0.0019	0.0005	mg/L	0.00200		95.0	70-130	0.00	25	
Dichloromethane	0.0019	0.0005	mg/L	0.00200		95.0	70-130	0.00	25	
Methyl-tert-butyl ether	0.0016	0.0005	mg/L	0.00200		80.0	70-130	6.06	25	
trans-1,2-Dichloroethene	0.0019	0.0005	mg/L	0.00200		95.0	70-130	0.00	25	
1,1-Dichloroethane	0.0019	0.0005	mg/L	0.00200		95.0	70-130	0.00	25	
cis-1,2-Dichloroethylene	0.0018	0.0005	mg/L	0.00200		90.0	70-130	0.00	25	
2,2-Dichloropropane	0.0018	0.0005	mg/L	0.00200		90.0	70-130	5.71	25	
Chloroform	0.0020	0.0005	mg/L	0.00200		100	70-130	5.13	25	
1,1,1-Trichloroethane	0.0019	0.0005	mg/L	0.00200		95.0	70-130	0.00	25	
1,1-Dichloropropene	0.0018	0.0005	mg/L	0.00200		90.0	70-130	0.00	25	
Carbon tetrachloride	0.0019	0.0005	mg/L	0.00200		95.0	70-130	5.41	25	
1,2-Dichloroethane	0.0019	0.0005	mg/L	0.00200		95.0	70-130	5.41	25	
Benzene	0.0019	0.0005	mg/L	0.00200		95.0	70-130	0.00	25	
Trichloroethene	0.0018	0.0005	mg/L	0.00200		90.0	70-130	0.00	25	
1,2-Dichloropropane	0.0018	0.0005	mg/L	0.00200		90.0	70-130	0.00	25	
Dibromomethane	0.0019	0.0005	mg/L	0.00200		95.0	70-130	5.41	25	
Bromodichloromethane	0.0018	0.0005	mg/L	0.00200		90.0	70-130	0.00	25	
cis-1,3-Dichloropropene	0.0016	0.0005	mg/L	0.00200		80.0	70-130	6.06	25	
Toluene	0.0018	0.0005	mg/L	0.00200		90.0	70-130	0.00	25	
trans-1,3-Dichloropropene	0.0017	0.0005	mg/L	0.00200		85.0	70-130	0.00	25	
1,1,2-Trichloroethane	0.0018	0.0005	mg/L	0.00200		90.0	70-130	0.00	25	
1,3-Dichloropropane	0.0018	0.0005	mg/L	0.00200		90.0	70-130	0.00	25	
Tetrachloroethene	0.0019	0.0005	mg/L	0.00200		95.0	70-130	0.00	25	
Dibromochloromethane	0.0018	0.0005	mg/L	0.00200		90.0	70-130	5.71	25	
Chlorobenzene	0.0019	0.0005	mg/L	0.00200		95.0	70-130	0.00	25	
1,1,1,2-Tetrachloroethane	0.0019	0.0005	mg/L	0.00200		95.0	70-130	5.41	25	
Ethylbenzene	0.0019	0.0005	mg/L	0.00200		95.0	70-130	0.00	25	
m,p-Xylene	0.0038	0.0010	mg/L	0.00400		95.0	70-130	0.00	25	
o-Xylene	0.0019	0.0005	mg/L	0.00200		95.0	70-130	0.00	25	
Styrene	0.0018	0.0005	mg/L	0.00200		90.0	70-130	0.00	25	
Bromoform	0.0018	0.0005	mg/L	0.00200		90.0	70-130	0.00	25	
1,1,2,2-Tetrachloroethane	0.0019	0.0005	mg/L	0.00200		95.0	70-130	5.41	25	
1,2,3-Trichloropropane	0.0019	0.0005	mg/L	0.00200		95.0	70-130	0.00	25	
Bromobenzene	0.0018	0.0005	mg/L	0.00200		90.0	70-130	5.41	25	
2-Chlorotoluene	0.0019	0.0005	mg/L	0.00200		95.0	70-130	0.00	25	
4-Chlorotoluene	0.0019	0.0005	mg/L	0.00200		95.0	70-130	5.41	25	
1,3-Dichlorobenzene	0.0019	0.0005	mg/L	0.00200		95.0	70-130	0.00	25	
1,4-Dichlorobenzene	0.0018	0.0005	mg/L	0.00200		90.0	70-130	5.41	25	
1,2-Dichlorobenzene	0.0019	0.0005	mg/L	0.00200		95.0	70-130	0.00	25	
1,2,4-Trichlorobenzene	0.0015	0.0005	mg/L	0.00200		75.0	70-130	12.5	25	
Xylenes (total)	0.0056	0.0015	mg/L	0.00600		93.3	70-130	1.81	25	
Total THMs	0.0074	0.0020	mg/L	0.00800		92.5	70-130	2.74	25	

Northern Arizona Pump Co. P.O. Box 252 Cornville, AZ 86325	Project: New Source Project Number: Mack Project Manager: Nathan White	Reported: 03/16/05 14:37

Inorganic Chemistry - Quality Control

Legend Technical Services of Arizona, Inc.

Analyte	Result	Reporting Limit	Units	Spike Level	Source Result	%REC	%REC Limits	RPD	RPD Limit	Notes
Batch B502464 - NO PREP										
Blank (B502464-BLK1)				*Prepared & Analyzed: 02/17/05*						
Nitrite as N	<0.10	0.10	mg/L							
LCS (B502464-BS1)				*Prepared & Analyzed: 02/17/05*						
Nitrite as N	0.12	0.10	mg/L	0.100		120	80-120			
LCS Dup (B502464-BSD1)				*Prepared & Analyzed: 02/17/05*						
Nitrite as N	0.12	0.10	mg/L	0.100		120	80-120	0.00	25	
Matrix Spike (B502464-MS1)		Source: 5020893-02		*Prepared & Analyzed: 02/17/05*						
Nitrite as N	1.02	0.10	mg/L	0.100	0.93	90.0	80-120			
Matrix Spike Dup (B502464-MSD1)		Source: 5020893-02		*Prepared & Analyzed: 02/17/05*						
Nitrite as N	1.04	0.10	mg/L	0.100	0.93	110	80-120	20.0	25	
Batch B502478 - NO PREP										
Blank (B502478-BLK1)				*Prepared & Analyzed: 02/18/05*						
Fluoride	<0.20	0.20	mg/L							
Blank (B502478-BLK2)				*Prepared & Analyzed: 02/18/05*						
Fluoride	<0.20	0.20	mg/L							
LCS (B502478-BS1)				*Prepared & Analyzed: 02/18/05*						
Fluoride	3.04	0.20	mg/L	3.00		101	80-120			
LCS Dup (B502478-BSD1)				*Prepared & Analyzed: 02/18/05*						
Fluoride	3.04	0.20	mg/L	3.00		101	80-120	0.00	25	

Northern Arizona Pump Co. P.O. Box 252 Cornville, AZ 86325	Project: New Source Project Number: Mack Project Manager: Nathan White	Reported: 03/16/05 14:37

Notes and Definitions

Q3	Sample received with improper chemical preservation.
M2	Matrix spike recovery was low, the method control sample recovery was acceptable.
_A	Absent
BLK	Method Blank
LCS/Dup	Laboratory Control Sample/Laboratory Fortified Blank/Duplicate
MS/Dup	Matrix Spike/Duplicate
Dry	Sample results reported on a dry weight basis
RPD	Relative Percent Difference

Exhibit 3

ARIZONA DEPARTMENT OF WATER RESOURCES
Office of Assured and Adequate Water Supply
3550 North Central Ave., Phoenix, Arizona 85012
Telephone (602) 771-8585
Fax (602) 771-8689

Janet Napolitano
Governor

Herbert R. Guenther
Director

ANALYSIS OF ADEQUATE WATER SUPPLY

September 11, 2006

File Number:	23-402259.0000
Development:	Mingus Panorama Estates
Location:	Township 16 North, Range 4 East, Section 35 Yavapai County, Arizona
Land Owner:	Mingus Panorama Estate, LLC

The Arizona Department of Water Resources has evaluated the Analysis of Adequate Water Supply application for Mingus Panorama Estates pursuant to A.A.C. R12-15-723. The proposed development includes 69 single-family residential lots. A yet to be formed water provider will serve the master plan community. Conclusions of the review are indicated below based on the adequate water supply criteria referenced in A.R.S. § 45-108 and A.A.C. R12-15-701, 715, 723 *et seq.*

- **Physical, Continuous, and Legal Availability of Water for 100 Years**
  On the basis of the Department's review, the Department has determined that 17.69 acre-feet per year of groundwater will be **physically and continuously available**, which is equivalent to the applicant's projected build out demands for the development, including system losses, of 17.70 acre-feet per year. The development is not located inside of the service area of any existing provider. Therefore, **legal availability** of the water is not proven. Applications for Water Adequacy Reports that follow the Analysis of Adequate Supply will need to reference this letter. Individual Notices of Intent to Serve will be required for each application for a Water Adequacy Report.

- **Adequate Water Quality**
  The requirement of an Analysis of Adequate Water Supply will be re-evaluated for each application for a Water Adequacy Report.

The term of this Analysis of Adequate Water Supply is ten years from the date of this letter and may be renewed upon request, subject to approval by the Department. Throughout the term of this determination, the projected demand of this development will be considered when reviewing other requests for assured water supply in the area.

Prior to obtaining plat approval by the local platting authority and approval of the public report by the Department of Real Estate, a Water Adequacy Report must be obtained for each subdivision

plat. The findings of this Analysis of Adequate Water Supply may be used to demonstrate that certain requirements for a Water Adequacy Report have been met. This determination may be invalidated if the development plan or other conditions change prior to filing for a Water Adequacy Report.

Questions may be directed to the Office of Assured/Adequate Water Supply at (602) 771-8585.

Thomas Carr for

Sandra Fabritz-Whitney, Assistant Director
Water Management Division

cc: Mingus Panorama Estates, LLC
Rosemary Lopez, Office of Assured/Adequate Water Supply
ADWR attorney, Legal Division

Exhibit 4

Preliminary Proposal for the
Operation and Maintenance of the

Mingus Panorama Domestic Water System

ADEQ System # 00-000?

August 23, 2006

Prepared by:

Contract Wastewater Operations, LLC
297 Antelope Drive,
Sedona, Arizona 86336
Tel: (928) 204-1020

- Changing media in the Arsenic Removal System is not included in this proposal
- Major mechanical failures, electrical component failures or infrastructure failures (i.e. the deep well going out or the repair of waterline breaks) are not included in the price of this contract. CWO will identify and mitigate problems and arrange for specialized contactors to repair those items.

Purchasing:

- All purchases made on behalf of the OWNER by CWO shall be billed to the OWNER at actual cost. Whenever possible, the OWNER will be billed directly by material/service providers.
- The OWNER will provide for any additional expenses.

CWO shall perform additional services only upon prior authorization by the OWNER.

The Initial Monthly Contract Price for the Operation and Maintenance of the Nontransient- Noncommunity Water System is $ 345.00.

The prices stated in this proposal are preliminary and intended for budgeting purposes. CWO reserves the right to negotiate and further define obligations by both parties before a final agreement is signed.

Clara Y. Mak Date: 9/28/2006
Mingus Panorama Water System
Representative

Wendy Ferguson Date: 9/28/06
Wendy Ferguson
Contract Wastewater Operations, LLC
ADEQ Operator Certification # 06 736

This is an original copy
Operator Certification # is 06736

The water system infrastructure consists of a well that has a 10 hp submersible pump, casing size of 4" inches, one 51,300 gallon water storage tank, one 5000 gal pressure tank, one water softening unit to precede an AdEdge Arsenic Adsorption Treatment System, a chemical metering pump for sodium hypochlorite disinfection, three 10 hp pressure pumps (booster pumps) and approximately 5,000 ft. of distribution system, 69+ service connections and 4 fire hydrants. (Please add any other equipment you want included in this proposal)

Services provided by Contract Wastewater Operations (CWO) :

- Provide System inspections, a minimum of one per week, performing equipment inspections while on-site.
- Provide 24-hour, 365 days per year emergency on-call services with a 60 minute maximum response time to emergency calls.
- Provide for monthly Total Coliform sample collection and arrange with courier for sample transportation to certified laboratory.
- Prepare compliance monitoring reports.
- Provide system operations and process control including pressure readings, equipment inspections, general maintenance, semi-annual flushing of distribution system and schedule annual inspections of the backflow prevention devices.
- Provide personnel and expertise to operate your Water System in accordance with all Federal, State, and local laws.
- Provide Operation and Maintenance of all equipment associated with the water system to ensure proper operation within our scope of ability. We do not have staff that are plumbers, welders, electricians etc… and it will be necessary at times for the OWNER to secure specialized services from other vendors
- Design and implement a preventive maintenance program as related to manufacturers' recommended maintenance of water company equipment.
- Design and implement a record keeping program, including daily logs, chains of custody, backflow prevention program, emergency response plan, contingency plan, consumer confidence reports, microbiological site sampling plan, MSDS file, oversee the Monitoring Assistance Program by ADEQ, etc…
- Perform routine housekeeping.

Responsibilities of Mingus Panorama Domestic Water System HOA (Owner):

- The owner will provide all materials and supplies necessary to properly operate and maintain facilities.
- The owner will provide for any additional expenses such as replacement parts, repair parts, independent contractors such as electricians and plumbers when the scope of work is outside the qualifications of Operators with CWO, water sample transportation and processing by certified laboratories, chemicals, annual charges by ADEQ for the Monitoring Assistance Program (MAP), certified backflow testing, etc…
- The owner will provide copies of all owners' manuals and related literature on installed water company equipment if available.