NEW APPLICATION

0000043908

RECEIVED

2002 JAN 24 P 4: 47

AZ CORP COMMISSION
DOCUMENT CONTROL

MEMORANDUM

TO: Docket Control

FROM: Ernest G. Johnson
Director
Utilities Division

E-00000D-02-0065

DATE: January 24, 2002

RE: NEW DOCKET FOR BIENNIAL ELECTRIC TRANSMISSION ASSESSMENT FOR TEN YEAR PERIOD 2002 THROUGH 2011

Utilities Division Staff would like to open a new docket for the above matter. All ten-year plans for electric transmission lines submitted for year 2002 (which must be filed with the Commission by January 31, 2002) should be included in this docket.

SALT RIVER PROJECT 10 YEAR PLAN

2002 — 2011

APPENDIX I

Report on the Phase 1 Study of the Central Arizona Transmission System (CATS)

Prepared for the CATS Steering Committee
by Arizona Public Service, Salt River Project,
and Tucson Electric Power

July 20, 2001

Study Plan and Timeline for CATS Phase II

01-07558 12/01

Executive Summary

I. Introduction

Historically, Arizona's EHV transmission system has been developed to interconnect large generating resources to major load centers primarily located in the Phoenix and Tucson metropolitan areas. With the exception of Palo Verde, the resultant transmission development within Arizona was located in the northeastern and northwestern portions of the state (Figure 1). And, while the resultant transmission development interconnected these generation facilities with their consumers located in the Phoenix and Tucson areas, they also provided stronger ties to neighboring states such as California, New Mexico, Colorado, and Utah. In the early stages of developing the transmission system for the Palo Verde generation facility, consideration was given to building a 500kV line from Palo Verde to the Tucson area. However, the final Palo Verde transmission system design moved towards strengthening EHV transmission interconnection in the Phoenix area, resulting in the construction of the second Palo Verde-Kyrene 500kV line. This left development of future EHV transmission ties between the Phoenix and Tucson areas for future consideration.

Figure 1
Arizona EHV Transmission

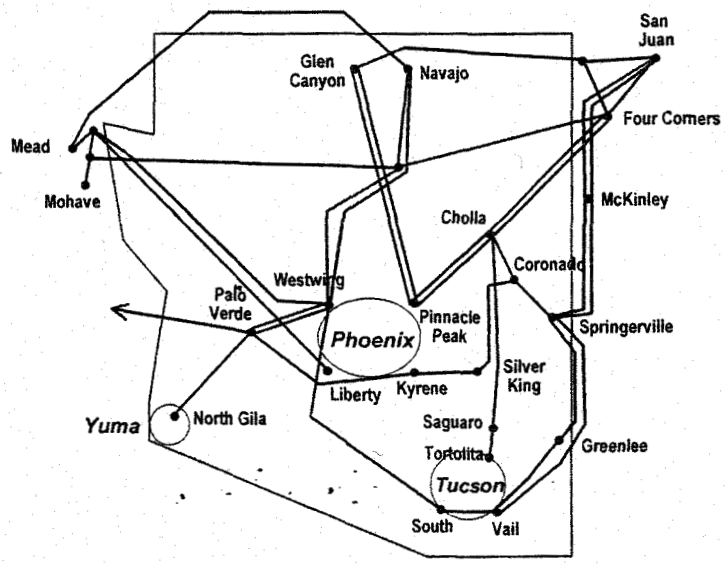

Over the last ten years Arizona has experienced significant increases in business and residential growth in the Phoenix and Tucson areas. As Arizona's electric utility industry continues a breakneck pace to keep up the increasing growth and demand, resource developers vie for opportunities to site and build new generation to access market opportunities in the Arizona and California areas. Under these newer growth scenarios, Arizona's EHV system capability continues to experience higher flows and denser utilization. As projected growth continues to outstrip the ability of the Phoenix and Tucson transmission system's ability to deliver needed energy to their respective areas, new generation proposals are seeking to tap all existing transmission capability to achieve access to as many markets possible. Due to the attractiveness of the Palo Verde switchyard as a market hub, existing gas pipeline capability, and the existing Phoenix and Tucson growth markets, much of the proposed generation, in excess of 10,000 MW, is being sited in the CATS study area, within the central Arizona region between Palo Verde, Phoenix, and Tucson.

Unfortunately, EHV transmission is limited in this area and local utilities are struggling to keep pace with their near term transmission infrastructure requirements to accommodate the expected growth in customer load while posturing themselves to tap the pool of proposed resource additions that are being proposed.. Others are looking at opportunities to use proposed CATS transmission alternatives to facilitate siting of their generation in a manner that would stimulate economical and reliable transmission service from their facility to existing and future energy markets. Early discussion of these transmission needs occurred between Salt River Project (SRP), Arizona Public Service (APS), and Tucson Electric Power (TEP). In principle, the utilities agreed that a regional transmission planning effort was needed to assess EHV transmission needs and opportunities in the central Arizona area.

From this discussion, the Central Arizona Transmission System (CATS) study effort was proposed. The primary participants were to include all of Arizona's transmission utilities including Arizona Public Service, Salt River Project, Tucson Electric Company, Arizona Electric Power Cooperative, Citizens Communications Company, Western Area Power Administration, and the Arizona Corporation Commission Staff. Recognizing the need to involve all stakeholders in the process, an invitation letter was sent to SWRTA (Southwest Regional Transmission Association) members and other interested parties. Consequently several other utilities, independent power producers, and other interested parties are actively participating in the CATS effort.

The central Arizona region for the (CATS) study encompasses an area bounded by the Phoenix Metropolitan area to the north, the Tucson

Metropolitan area to the south, the Palo Verde Generating Station and environs to the west and to the east the Arizona/New Mexico border. This area includes Coolidge, Casa Grande, Eloy, Marana, Florence, Maricopa as well as the major metropolitan areas of Phoenix and Tucson. A map of the study area is shown in the highlighted areas on Figure 2.

Figure 2
Central Arizona Transmission System (CATS) Study

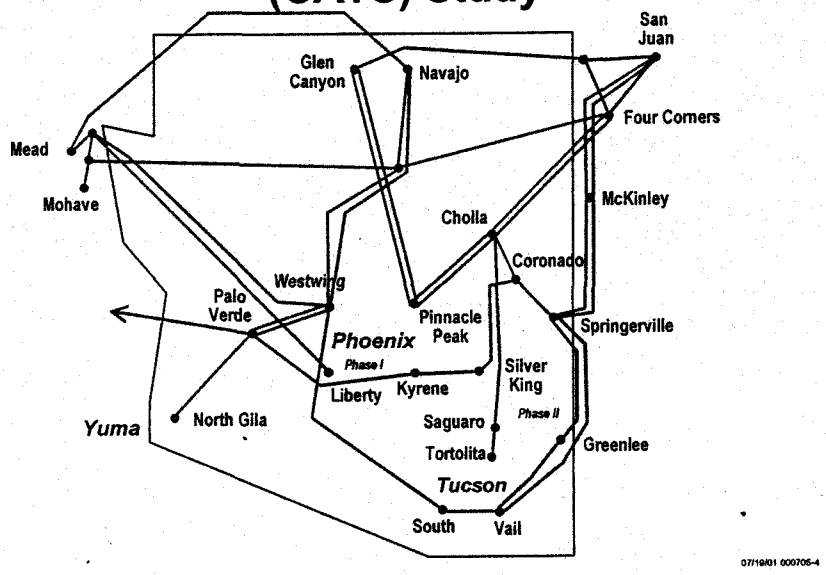

The study participants held an initial meeting in March 2000 to evaluate the conceptual aspects of a proposed regional study for the central Arizona area. A kick-off meeting was held in June 2000 to formalize the study, develop study objectives and criteria, create organizational structure, and allocate resources to meet the scope of work and schedule. The study participants have met monthly to monitor progress.

Based on the discussion that occurred objectives were developed to address the regional needs of the participants. These objectives were to:

- Improve the use of the existing transmission system for future load growth in Phoenix and southern Arizona.
- Increase the power transfer import level into the Phoenix area.
- Increase the power transfer import level into the Tucson area.
- Increase the power transfer capability between the Phoenix and Tucson areas.
- Encourage future generation additions south of Phoenix and north of Tucson.
- Provide additional transmission capacity to and from the Palo Verde hub

- Increase import capability to Phoenix and Tucson from the Coronado/Springerville generation sites, where plans for new generation are being considered.

The scope of the study work was limited to a power flow analysis of all transmission alternatives and generations dispatch scenarios for N-0 and N-1 disturbances. Transient stability and post-transient analysis will be performed in the Phase II study effort.

During the course of the study it was recognized that several transmission alternatives would be required to address the needs of all the participants. In addition, the development of new generation resources in the CATS study area also suggested that different dispatch scenarios would also be required to fully assess the system performance of the transmission alternatives. For example, generation sited in the Palo Verde area would most likely benefit the Phoenix area system more than the Tucson area system. Conversely, generation sited in the Saguaro area would most likely benefit the Tucson area system more than the Phoenix area system. For this reason, the assessment of the transmission alternatives was divided into four different generation areas. These generation areas are highlighted on Figure 3.

Figure 3
Central Arizona Transmission System (CATS) Generation Study Areas

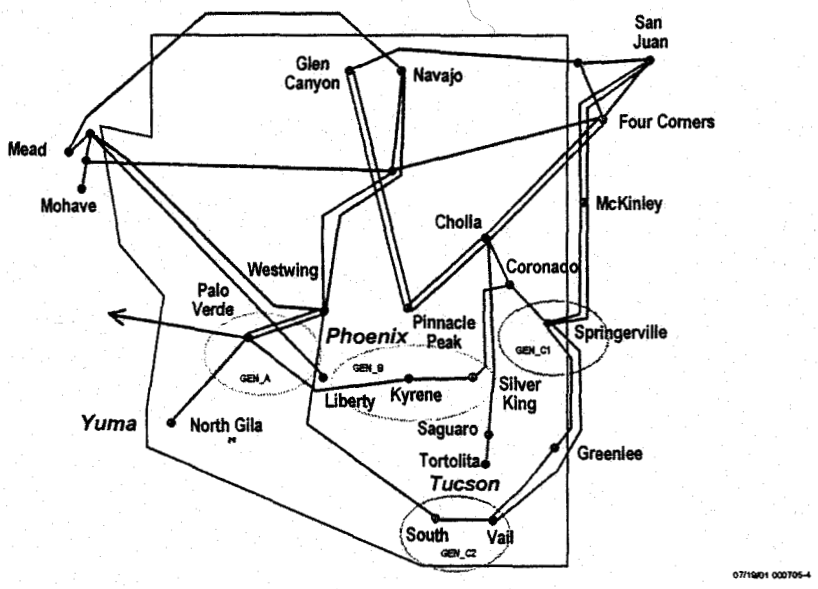

While all four generation areas were considered in the study, generation in the Phoenix and the central Arizona areas was studied extensively. The generation area located in the Coronado/Springerville region was also considered late in the study but not studied in detail.

Based on input received from the CATS study members, six transmission paths were determined to be of significant interest to the study members. These paths are listed below.

- Palo Verde to Saguaro 500kV Line (4 different variations).
- Palo Verde to Southwest Phoenix Valley 500kV Line (2 different variations)
- Use of Westwing to South 345kV Line (2 different variations)
- 500kV Line to the Southeast Phoenix Valley (1 variations)
- Loop-In of the Cholla to Saguaro 500kV Line into Silverking (2 different variations)
- Saguaro to Tucson Area at 500kV, 345kV or 230kV (4 different variations)

As can be seen from the above list, numerous transmission variations were developed and considered for study. It should also be noted that the scope of this study was to focus on the high voltage transmission system. Up to this time, no attempt has been made to address local area transmission problems or issues. As such, local area enhancements and improvements will be required and need to be evaluated in the next study phase. General one-lines of the study alternatives are included in Appendix 1 through Appendix 13.

As has been discussed, the intent of the (CATS) study was to provide a framework for the participating entities to plan, coordinate, and locate transmission lines and bulk power stations to meet their objectives. Phase I of the study was a screening effort that evaluated a group of transmission alternatives under a broad range of generation patterns to determine how the resultant system performance could meet the objectives of the study. The strengths and weaknesses of the transmission alternatives were evaluated and observed and ultimately used to narrow down the transmission options that merited further, more detailed, study in the second phase of the study effort.

Power flow studies were performed to assess the system performance of each of the proposed transmission alternatives for each of the generation dispatch patterns studied. The assessment was performed by raising generation in the generation area being studied and increasing load in the load area being studied. The system became constrained when a facility limit was reached. For example, increasing generation in the Palo Verde area and increasing load in the Phoenix area assessed the system performance of the Central Arizona Alternatives.

The study areas were broken down into four separate study areas. The following is a breakdown of the four areas and the responsible participant.

- Schedule new Generation from the Palo Verde area (Group A. Generation) into the Phoenix area (SRP).
- Schedule new Generation from the Coolidge area (Group B. Generation) into the Phoenix area (SRP).
- Schedule new Generation from Tucson (Group C. Generation), Saguaro and Springerville (Group C. Generation) and Palo Verde (Group A. Generation) into the Tucson and AEPCO areas (TEP).
- Schedule new Generation from the Palo Verde area (Group A. Generation) to the Colorado/New Mexico area. (APS).

II. Summary of Conclusions

Based on the studies performed, the following is concluded.

1. Building new transmission in the CATS area will increase transfers between Phoenix and Tucson.
2. While single alternatives can provide benefits to individual participants, more synergies are derived and more regional benefits can be achieved by combining alternatives.
3. SRP will derive more benefits from a new transmission alternative between Palo Verde and the Southeast Valley (Southeast Station).
    a. Phoenix load serving capability
    b. Interfacing with the "Build out of Browning"
4. Tucson will derive more benefits from a transmission alternative between Palo Verde – Saguaro – South and Palo Verde – Saguaro - Winchester.
5. AEPCO will derive more benefits from a transmission alternative between Palo Verde – Saguaro – Winchester.
6. The system performance of the Palo Verde – Saguaro and the Gila Bend – Saguaro alternatives is nearly the same. However, the recent establishment of new National Monuments in southeastern Arizona creates uncertainty about being able to build timely transmission for the Gila Bend – Saguaro alternative.
7. The availability of gas in the Saguaro/Southeast Valley area coupled with the proposed CATS transmission alternatives to these areas should enhance the siting of new generation in the Saguaro/Southeast Valley area.
8. Developing new generation in the Saguaro/Southeast Valley area will improve the efficiency of all the transmission alternatives studied and increase the load serving capability to Phoenix and Tucson.
9. Strengthening the interconnection between the Cholla/Saguaro and/or the Coronado/Silverking transmission system to the east of the Phoenix system will enhance exports from Palo Verde to Phoenix.
10. Developing new interconnections to the transmission system east of Tucson enhances exports from Palo Verde to Tucson.

11. Opportunities to tie Winchester to the Southeast Valley may improve the capability of the Springerville south system
12. The Alternatives chosen to advance to Phase II will need to incorporate consideration of TEP's' Two-County flow requirements.

III. Recommendations

Based on the conclusions of this study, the following is recommended.

1. Continue the CATS study work.
2. Perform Phase II of the CATS study to assess and quantify the components of CATS that the participants want to initially build.
3. Phase II studies should quantify the regional benefits of the following transmission alternatives:
   a. Jojoba – Southeast Station 500kV line
   b. Jojoba – Saguaro 500kV line
   c. Southeast Station or Saguaro – Winchester 500kV line
4. Individual CATS participants evaluate and develop the underlying system requirements needed to integrate the proposed 500kV alternatives into their respective systems.
5. Quantify the regional benefits of strengthening the interconnection between the Cholla/Saguaro and/or the Coronado/Silverking transmission system to the east of the Phoenix system.
6. Facilitate discussions among CATS participants to develop the preferred transmission alternatives.
7. Initiate joint discussions among the CATS participants to begin developing principles for jointly developing a preferred CATS transmission alternative.

Table of Contents

I. Introduction.....1

II. Conclusion.....3

III. Recommendations.....4

IV. Study Objectives and Scope.....5

V. Study Assumptions.....5

VI. Methodology.....7

VII. Summary of Technical Results.....9

1. Arizona Public Service.....9

2. Salt River Project.....11

3. Tucson Electric Power.....16

Tables

1. Transmission Alternative 1
2. Transmission Alternative 1:Sensitivity 1: Added 230kV System to Southeast Valley (Browning/SilverKing/Hayden)
3. Transmission Alternative 2
4. Transmission Alternative 4
5. Transmission Alternative 5
6. Transmission Alternative 5: Sensitivity 1: Added 230kV System to Southeast Valley (Browning/SilverKing/Hayden)
7. Transmission Alternative 5: Sensitivity 2: Added 230kV System to Southeast Valley (Browning/SilverKing/Hayden) with 200mw of Generation in the Southeast Valley (Hayden).
8. Transmission Alternative 5: Sensitivity 2: Added 230kV System to Southeast Valley (Browning/SilverKing/Hayden) with 200mw of Generation in the Southeast Valley (Hayden).
9. Transmission Alternative 6
10. Transmission Alternative 7
11. Transmission Alternative 7A
12. Transmission Alternative 8
13. Transmission Alternative 8A
14. APS Alternative 5
15. APS Alternative 1

Central Arizona Transmission System (CATS)
Phase I

I. Introduction

Historically, Arizona's EHV transmission system has been developed to interconnect large generating resources to major load centers primarily located in the Phoenix and Tucson metropolitan areas. With the exception of Palo Verde, the resultant transmission development within Arizona was located in the northeastern and northwestern portions of the state (Figure 1). And, while the resultant transmission development interconnected these generation facilities with their consumers located in the Phoenix and Tucson areas, they also provided stronger ties to neighboring states such as California, New Mexico, Colorado, and Utah. In the early stages of developing the transmission system for the Palo Verde generation facility, consideration was given to building a 500kV line from Palo Verde to the Tucson area. However, the final Palo Verde transmission system design moved towards strengthening EHV transmission interconnection in the Phoenix area, resulting in the construction of the second Palo Verde-Kyrene 500kV line. This left development of future EHV transmission ties between the Phoenix and Tucson areas for future consideration.

Figure 1
Arizona EHV Transmission

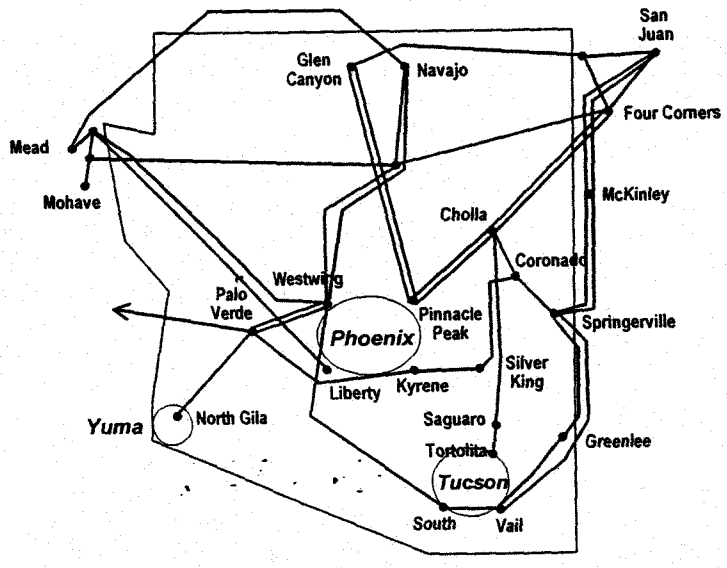

Central Arizona Transmission System (CATS)
Phase I

I. Introduction

Historically, Arizona's EHV transmission system has been developed to interconnect large generating resources to major load centers primarily located in the Phoenix and Tucson metropolitan areas. With the exception of Palo Verde, the resultant transmission development within Arizona was located in the northeastern and northwestern portions of the state (Figure 1). And, while the resultant transmission development interconnected these generation facilities with their consumers located in the Phoenix and Tucson areas, they also provided stronger ties to neighboring states such as California, New Mexico, Colorado, and Utah. In the early stages of developing the transmission system for the Palo Verde generation facility, consideration was given to building a 500kV line from Palo Verde to the Tucson area. However, the final Palo Verde transmission system design moved towards strengthening EHV transmission interconnection in the Phoenix area, resulting in the construction of the second Palo Verde-Kyrene 500kV line. This left development of future EHV transmission ties between the Phoenix and Tucson areas for future consideration.

Figure 1
Arizona EHV Transmission

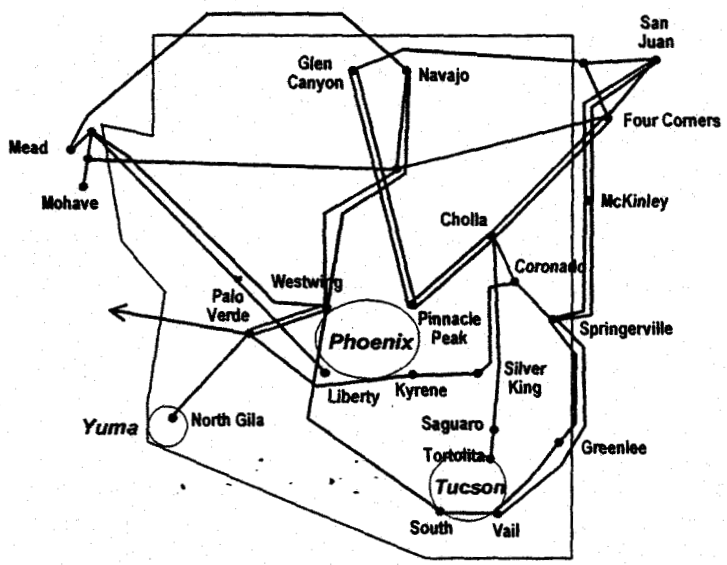

Over the last ten years Arizona has experienced significant increases in business and residential growth in the Phoenix and Tucson areas. As Arizona's electric utility industry continues a breakneck pace to keep up the increasing growth and demand, resource developers vie for opportunities to site and build new generation to access market opportunities in the Arizona and California areas. Under these newer growth scenarios, Arizona's EHV system capability continues to experience higher flows and denser utilization. As projected growth continues to outstrip the ability of the Phoenix and Tucson transmission system's ability to deliver needed energy to their respective areas, new generation proposals are seeking to tap all existing transmission capability to achieve access to as many markets possible. Due to the attractiveness of the Palo Verde switchyard as a market hub, existing gas pipeline capability, and the existing Phoenix and Tucson growth markets, much of the proposed generation, in excess of 10,000 MW, is being sited in the CATS study area, within the central Arizona region between Palo Verde, Phoenix, and Tucson.

Unfortunately, EHV transmission is limited in this area and local utilities are struggling to keep pace with their near term transmission infrastructure requirements to accommodate the expected growth in customer load while posturing themselves to tap the pool of proposed resource additions that are being proposed.. Others are looking at opportunities to use proposed CATS transmission alternatives to facilitate siting of their generation in a manner that would stimulate economical and reliable transmission service from their facility to existing and future energy markets. Early discussion of these transmission needs occurred between Salt River Project (SRP), Arizona Public Service (APS), and Tucson Electric Power (TEP). In principle, the utilities agreed that a regional transmission planning effort was needed to assess EHV transmission needs and opportunities in the central Arizona area.

From this discussion, the Central Arizona Transmission System (CATS) study effort was proposed. The primary participants were to include all of Arizona's transmission utilities including Arizona Public Service, Salt River Project, Tucson Electric Company, Arizona Electric Power Cooperative, Citizens Communications Company, Western Area Power Administration, and the Arizona Corporation Commission Staff. Recognizing the need to involve all stakeholders in the process, an invitation letter was sent to SWRTA (Southwest Regional Transmission Association) members and other interested parties. Consequently several other utilities, independent power producers, and other interested parties are actively participating in the CATS effort.

The central Arizona region for the (CATS) study encompasses an area

bounded by the Phoenix Metropolitan area to the north, the Tucson Metropolitan area to the south, the Palo Verde Generating Station and environs to the west and to the east the Arizona/New Mexico border. This area includes Coolidge, Casa Grande, Eloy, Marana, Florence, Maricopa as well as the major metropolitan areas of Phoenix and Tucson. A map of the study area is shown in the highlighted areas on Figure 2.

Figure 2
Central Arizona Transmission System (CATS) Study

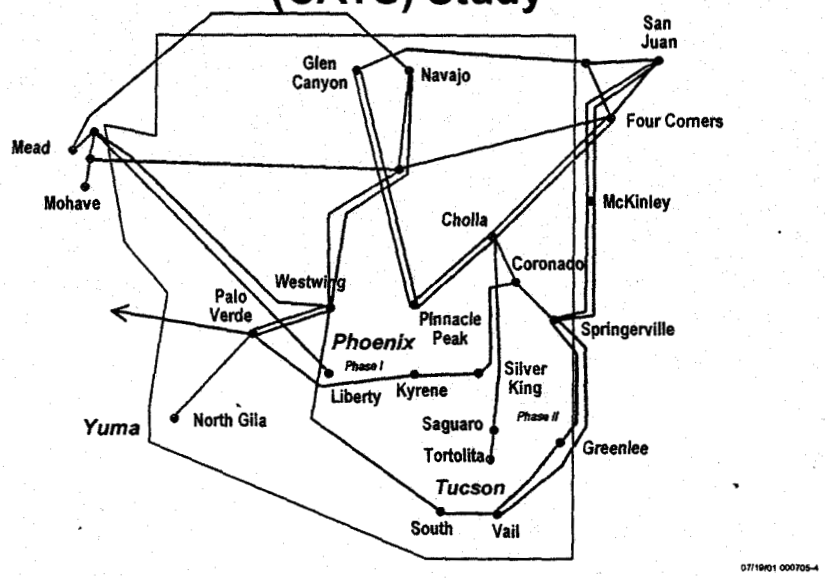

The study participants held an initial meeting in March 2000 to evaluate the conceptual aspects of a proposed regional study for the central Arizona area. A kick-off meeting was held in June 2000 to formalize the study, develop study objectives and criteria, create organizational structure, and allocate resources to meet the scope of work and schedule. This report documents the results of the Phase I CATS study effort.

II. Conclusions

Based on the results of this study, the following is concluded.

1. Building new transmission in the CATS area will increase transfers between Phoenix and Tucson.
2. While single alternates can provide benefits to individual participants, more synergies are derived to achieve more regional benefits by combining alternates.
3. SRP will derive more benefits from a new transmission alternative between Palo Verde and the Southeast Valley (Southeast Station).
    a. Phoenix load serving capability
    b. Interfacing with the "Build out of Browning"

4. Tucson will derive more benefits from a transmission alternative between Palo Verde – Saguaro – South and Palo Verde – Saguaro - Winchester.
5. AEPCO will derive more benefits from a transmission alternative between Palo Verde – Saguaro – Winchester.
6. The system performance of the Palo Verde – Saguaro and the Gila Bend – Saguaro alternatives is nearly the same. However, the recent establishment of new National Monuments in southeastern Arizona creates uncertainty about being able to build the Gila Bend – Saguaro alternative.
7. The availability of gas in the Saguaro/Southeast Valley area coupled with the proposed CATS transmission alternatives to these areas should enhance the siting of new generation in the Saguaro/Southeast Valley area.
8. Developing new generation in the Saguaro/Southeast Valley area will improve the efficiency of all the transmission alternatives studied and increase the load serving capability to Phoenix and Tucson.
9. Strengthening the interconnection between the Cholla/Saguaro and/or the Coronado/Silverking transmission system to the east of the Phoenix system will enhances exports from Palo Verde to Phoenix.
10. Developing new interconnections to the transmission system east of Tucson enhances exports from Palo Verde to Tucson.
11. Opportunities to tie Winchester to the Southeast Valley may improve the capability of the Springerville south system
12. The Alternatives chosen to advance to Phase II will have to be analyzed in regards to Tucson's Two-County flow requirements.

III. Recommendations

Based on the conclusions of this study, the following is recommended.

1. Continue the CATS study work.
2. Perform phase II of CATS study to assess and quantify the components of CATS that the participants want to initially build.
3. Phase II studies should quantify the regional benefits of the following transmission alternatives:
   a. Jojoba – Southeast Station 500kV line
   b. Jojoba – Saguaro 500kV line
   c. Southeast Station or Saguaro – Winchester 500kV line
4. Individual CATS participants evaluate and develop underlying system requirements needed to integrate the proposed 500kV alternatives into their respective systems.
5. Quantify the regional benefits of strengthening the interconnection between the Cholla/Saguaro and/or the Coronado/Silverking transmission system to the east of the Phoenix system.
6. Facilitate discussions among CATS participants to develop the preferred transmission alternatives.

Figure 3
Central Arizona Transmission System (CATS) Generation Study Areas

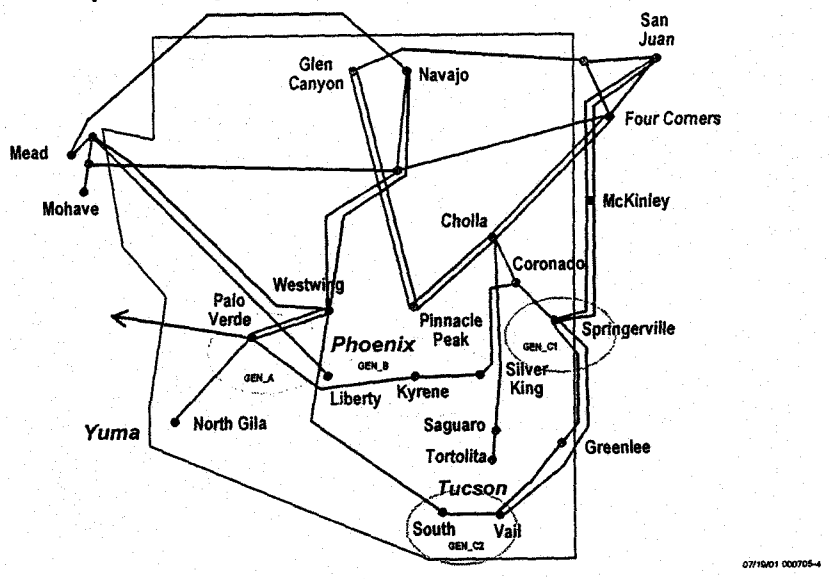

As can be seen from Figure 3, there are four generation areas that were considered in the study. Due to its geographical distance apart from the Palo Verde, Phoenix, and Tucson areas, analysis was not performed using the Springerville generation area (GEN C1).
Based on input received from the CATS study members, six transmission paths were determined to be of significant interest to the study members. These paths are listed below.

- Palo Verde to Saguaro 500kV Line (4 different variations).
- Palo Verde to Southwest Phoenix Valley 500kV Line (2 different variations)
- Use of Westwing to South 345kV Line (2 different variations)
- 500kV Line to the Southeast Phoenix Valley (1 variations)
- Loop-In of the Cholla to Saguaro 500kV Line into Silverking (2 different variations)
- Saguaro to Tucson Area at 500kV, 345kV or 230kV (4 different variations)

As can be seen from the above list, numerous transmission variations were developed and considered for study. As a result of discussion and evaluation, the CATS study group reduced the number of study alternatives to the seven listed below. Salt River Project studied the first four alternatives, situated in central Arizona, while the last three alternatives, situated in southern Arizona, were studied by Tucson Electric Company. General one-lines of the study alternatives are included the Appendix section of this report.

Central Arizona Alternatives

Alternative 1: Palo Verde to Gila Bend 500kV Line
Gila Bend to Saguaro 500kV Line
Loop-In of the Cholla to Saguaro 500kV Line into Silverking
Alternative 2: Palo Verde to Saguaro 500kV Line
Loop-in of the Cholla to Saguaro 500kV Line into Silverking
Alternative 4: Palo Verde to Jojoba 500kV Line
Jojoba to Mobile 500kV Line
Mobile to Saguaro 500kV Line
Mobile to Southwest Valley 500kV Line
Westwing to Southwest Valley 345kV Line
Mobile to South 345kV Line
Mobile to Santa Rosa 230kV Line
Loop-in of the Cholla to Saguaro 500kV Line into Silverking
Alternative 5: Palo Verde to Mobile 500kV Line
Mobile to Saguaro 500kV Line
Mobile to Southeast Valley 500kV Line
Loop-in of the Cholla to Saguaro 500kV Line into Silverking
Loop-in of the Cholla to Saguaro 500kV Line into Hayden

Southern Arizona Alternatives

Alternative 6: Westwing to South #2 345kV Line
Alternative 7: Palo Verde to Saguaro 500kV Line
Tortolita 500kV/345kV Transformer
Tortolita to South 345kV Line
Alternative 8: Palo Verde to Saguaro 500kV Line
Winchester 500kV/345kV/230kV Station
Saguaro to Winchester 500kV Line
Tie-in of existing Greenlee to Vail 345kV line at Winchester
Winchester to Apache 230kV Line

It should also be noted that the scope of this study was to focus on the high voltage transmission system. No attempt was made to address local area transmission problems or issues.

VI. Methodology

The intent of the (CATS) study was to provide a framework for the participating entities to plan and coordinate transmission lines and bulk power stations located within the study area boundaries. Phase 1 of the study was a screening effort that evaluated a group of transmission alternatives under a broad range of generation patterns to determine how the resultant system performance could meet the objectives of the study. The strengths and weaknesses of the transmission alternatives were evaluated and observed. This work was used to narrow down the transmission options that merit further study in the second phase of the study effort.

Power flow studies were performed to assess the system performance of each of the proposed transmission alternatives for each of the generation dispatch patterns studied. The assessment was performed by raising generation in the generation area being studied and increasing load in the load area being studied until a facility limit is reached. For example, increasing generation in the Palo Verde area and increasing load in the Phoenix area assessed the system performance of the Central Arizona Alternatives.

There were three major load centers identified for this study. These load centers consisted of the Phoenix area load, Tucson area load, and Southern Arizona area load. The Phoenix area load consisted of (55%) SRP Valley Load and (45%)APS Valley Load while the Southern Arizona area load consisted of (80%) TEP Load and (20%) AEPCO Load.
In addition, the study areas were broken down into four separate study areas. The following is a breakdown of the four areas and the responsible participant.

- Schedule new Generation from the Palo Verde area (Group A. Generation) into the Phoenix area (SRP).
- Schedule new Generation from the Coolidge area (Group B. Generation) into the Phoenix area (WAPA).
- Schedule new Generation from Tucson (Group C. Generation), Springer Ville (Group C. Generation) and Palo Verde (Group A. Generation) into the Tucson area (TEP).
- Schedule new Generation from the Palo Verde area (Group A. Generation) to the Colorado/New Mexico area. (APS).

Power flow studies were performed using the General Electric Positive Sequence Load Flow (GE PSLF) program. The Western Systems Coordinating Council (WSCC) 2002 LS1 case was selected for use in this study. All CATS base cases were developed from this case. Study participants added all planned facilities from 2002 to 2005 for Arizona to the CATS base cases. Load was modeled at 90% of the forecasted 2005 summer peak load. All Transmission Alternatives were identified and modeled by study participants in the CATS base case with an out-of-service status.

Study performance standards were based on WSCC Reliability Criteria for Transmission System Planning and individual utility ratings for facilities. All study simulations were evaluated with all facilities in service (N-0) and under single contingency conditions (N-1).

VII. Summary of Technical Results

Arizona Public Service

Arizona Public Service reviewed the effects of delivering new generation from the Palo Verde area into the New Mexico-Colorado area. This review included studying the effects of Transmission Alternatives 1 and 5.

Load

The load in the New Mexico – Colorado area was split in a 45%/55% ratio, Colorado having the greater load. APS maintained the load ratio throughout the study. APS grew the load evenly throughout the affected zones. In addition, generation in the subject area was reduced to arrive at the final results.

Benchmark

Two benchmarks were defined, one at which a system component reached overload for N-0 condition, and one for which an N-1 condition resulted in overload. The benchmarks were determined by simultaneously increasing load and/or decreasing generation in the New Mexico-Colorado area while increasing generation in the Palo Verde area. Area interchange schedules were correspondingly adjusted. Although the Palo Verde area provided the increased generation to fulfill the interchange schedule requirements, the Four Corners, Cholla, Springerville, and Coronado stations actually supplied the growing demand in the Colorado-New Mexico areas.

In either case, the Four Corners 500/345 transformer was the limiting equipment. Overload of the transformer for N-0 occurred at 4260MW transfer from Arizona into Colorado-New Mexico area. At an N-1 condition, overload of the transformer occurred at 3890 MW. The Kyrene-Jojoba line outage resulted in the highest overload of the transformer.

Study Results

Of the various transmission alternatives, APS studied Alternatives 1 and 5, based on input from SRP, and
the fact that the alternatives were not intended to promote transfer capability east into Colorado and New Mexico. From the base case, at 4260MW transfer, the Four Corners 500/345 transformer overloaded at 101%. With a Kyrene-Jojoba outage, the overload increased to 112.6% of rating.

With the addition of Alternative 1, the Four Corners transformer loading

reduced to 94.7% of rating for N-0 condition. The loading also dropped to 102.4% of rating, at a transfer of 4260MW with the Kyrene-Jojoba outage. It should be noted for one of the Cholla 500/345 transformers out of service, the remaining Cholla 500/345 overloads to 109.8% of rating.

Alternative 5 slightly improved the loading of the Four Corners transformer to 93.6% of rating for N-0 condition at 4260MW transfer. For N-1, with the Kyrene-Jojoba line out of service, the loading is only 100.6%. Alternative 5 provides approximately 370MW additional transfer capability into the Colorado-New Mexico area for the worst case N-1 condition. Again, as with Alternative 1, a Cholla 500/345 outage causes the associated Cholla transformer to overload significantly more, at 113.5%.

Conclusions

Alternative 5 allows slightly greater transfer capability from Arizona into New Mexico and Colorado by relieving the loading on the Four Corners 500/345 transformer. This slight improvement is probably negligible considering that it is unforeseeable that such a large amount of generation would be redirected East into New Mexico and Colorado. Therefore, this portion of the analysis of the CATS study does not provide much weight in selecting an Alternative.

Salt River Project

The Salt River Project (SRP) studied the Transmission Alternatives associated with delivering new Palo Verde Generation into the Phoenix area.

Load

There were three major load centers studied. These load centers consisted of the following areas:

- Phoenix area load.
- Tucson area load.
- Southern Arizona area.

SRP was assigned to study the load in the Phoenix area. The Phoenix area load was defined as being 45% APS Valley Load and 55% SRP Valley Load. The load in Phoenix was adjusted base on this APS/SRP 45%/55% break down.

Voltage Devices

System voltages could not be maintained during the load-growing process with existing voltage control facilities. This resulted in bus voltages below the scheduled voltage and in some cases the power flow would not converge. To mitigate the problem, several fictitious static var compensator devices (SVD) were added to the SRP/APS system. The SVDs were added to the Kyrene 230kV, Estrella 230kV, Pinnical Peak 230kV, Agua Fria 230kV and the Santan 230kV buses. These SVDs were sized to provide sufficient vars to support the scheduled bus voltages in the base case for pre contingency conditions. The SVDs were locked down for post-contingency runs.

Benchmark

In order to measure what was gained by adding a transmission alternative to the base case, a benchmark was established. This benchmark was defined as being the amount of load and generation, which can be added to the base case system, without over-loading the Central Arizona 500kV system, for a (N-1) condition.

The load in the Phoenix area and the (Group A) generation were simultaneously raised until an (N -1) over-load condition was reached. The

load was increased by approximately (5000MW). An outage of the Palo Verde to Estrella 500kV Line caused the Kyrene to Jojoba 500kV Line to load to approximately (110%) of its emergency rating. Extrapolating this value back to (100%) yield approximately (4342MW) load increase.

Transmission Alternatives

There were various transmission options reviewed by the CATS study participants. These transmission options were grouped and studied as follows:

Alternative 1: Palo Verde to Gila Bend 500kV Line
Gila Bend to Saguaro 500kV Line
Loop-In of the Cholla to Saguaro 500kV Line into Silver King

Alternative 2: Palo Verde to Saguaro 500kV Line
Loop-in of the Cholla to Saguaro 500kV Line into Silver King

Alternative 4: Palo Verde to Jojoba 500kV Line
Jojoba to Mobile 500kV Line
Mobile to Saguaro 500kV Line
Mobile to Southwest Valley 500kV Line
Westwing to Southwest Valley 345kV Line
Mobile to South 345kV Line
Mobile to Santa Rosa 230kV Line
Loop-in of the Cholla to Saguaro 500kV Line into Silver King

Alternative 5: Palo Verde to Mobile 500kV Line
Mobile to Saguaro 500kV Line
Mobile to Southeast Valley 500kV Line
Loop-in of the Cholla to Saguaro 500kV Line into Silver King
Loop-in of the Cholla to Saguaro 500kV Line into Hayden

Each one of these four transmission alternatives was studied to determine how much more load and generation could be grown above the benchmark case.

Study Results

1. Alternative 1

The immediate result of applying Alternative 1, showed a decrease in the percent loading of the Kyrene to Jojoba 500kV Line from 110% to 89% for a Palo Verde to Estrella 500kV Line outage. The additions of the Palo Verde to Gila Bend 500kV Line, Gila Bend to Saguaro 500kV Line and the Loop-In of the Cholla to Saguaro 500kV Line into Silver

King would be required.

A sensitivity was run to determine how Alternative 1 and Alternative 5 would perform with 230kV Lines between Hayden, Silver King and Browning. A portion of the Santan load was also moved over to Browning to represent the build out of the Browning station.

1. Alternative 1

   With the addition 230kV Lines added to Alternative 1 the load and generation was increased to approximately (5685MW) before the first (N-1) overload occurred.

   The increase in load from the (4342MW) benchmark case to the (5685MW) level with Alternative 1 was an increase of (1343MW).

2. Alternative 5

   With the addition 230kV Lines added to Alternative 5 the load and generation was increased to approximately (6100MW) before the first (N-1) overload occurred.

   The increase in load from the (4342MW) benchmark case to the (6100MW) level with Alternative 1 was an increase of (1758MW).

A second sensitivity was run to determine how well Transmission Alternative 5 would perform with additional generation added in the Southeast Valley. 2000MW of generation was moved from the Palo Verde (Group A) generation to the Southeast Valley (Hayden/Coolidge/Florence).

Relocating 2000MW of generation to the Southeast Valley reduced the flows on the Palo Verde to Estrella 500kV Line and on the Kyrene to Jojoba 500kV Line. The percent loading of the Kyrene to Jojoba 500kV Line decreased from (100%) to (88%) for a Palo Verde to Estrella 500kV Line outage.

With the addition of generation in the Southeast Valley and the addition of 230kV Lines in the Southeast Valley to Alternative 5 the load and generation was increased to approximately (7500MW) before the first (N-1) overload occurred. The increase in load from the (4342MW) benchmark case to the (7500MW) level was an increase of (3158MW).

1)	Alternative 6	200 MW	decrease
2)	Alternative 7a	200 MW	decrease
3)	Alternative 8a	50 MW	decrease

Note these values are decreases in the transfer capability of additional generation from the Palo Verde area. Approximately 250 MW is being transferred from Springerville to the Morenci (AEPCO) area in the sensitivites. Therefore, even though a reduction in the transfer capacity from the Palo Verde area occurred, there was an overall increase into the Tucson/AEPCO systems.

More investigation needs to be performed in this area once dispatch scenarios and generation related transmission facilities are finalized.

Conclusions

Power flow analysis, using an (N-1), emergency overload criteria, indicates that Options 7a and 8a are the most beneficial projects to bring in power from the Palo Verde area to the Tucson/AEPCO area.

The underlying 138/115 kV systems for Tucson and AEPCO will have to be improved in order to fully utilize the capacity import improvements the Alternatives provide.

Note: The Alternatives chosen to advance to Phase II will have to be analyzed in regards to Tucson's Two-County flow requirements.

Tables

Table 1

Transmission Alternative 1

		BENCH MARK OUTAGE CASE 2005		SCENARIO I 5000MW (4342)		Alternative 1		SCENARIO II 5500MW				
EQUIPMENT	RATING AMPS	% OF RATING	FLOW AMPS	% OF RATING	FLOW AMPS	% OF RATING	FLOW AMPS	% OF RATING	FLOW AMPS	OUTAGE	MW	DELTA
KYRENE – JOJOBA 500kV	2647	34%	902	110%	2918	89%	2354	97%	2558	PALOVRDE-ESTRELLA 1 500kV		
KYRENE – JOJOBA 500kV	2647	40%	1044	106%	2805	77%	2040	84%	2215	CORONADO-SILVER KG 1 500kV		
KYRENE – JOJOBA 500kV	2647	34%	896	97%	2554	92%	2443	100%	2647	BROWNING-SILVERKG 1 500kV	5500	1158

Table 2

Transmission Alternative 1: Sensitivity_1: Added 230kV System to Southeast Valley (Browning/SilverKing/Hayden)

								SCENARIO II 5685MW WITH 230KV ALTS				
EQUIPMENT	RATING AMPS	% OF RATING	FLOW AMPS	% OF RATING	FLOW AMPS	% OF RATING	FLOW AMPS	% OF RATING	FLOW AMPS	OUTAGE	MW	DELTA
KYRENE – JOJOBA 500kV	2647							100%	2640	PALOVRDE-ESTRELLA 1 500kV	5685	1343
KYRENE – JOJOBA 500kV	2647							98%	2590	BROWNING-SILVERKG 1 500kV		

Table 3

Transmission Alternative 2

		BENCH MARK OUTAGE CASE 2005		SCENARIO I 5000MW (4342)		Alternative 2		SCENARIO II 5500MW				
EQUIPMENT	RATING AMPS	% OF RATING	FLOW AMPS	% OF RATING	FLOW AMPS	% OF RATING	FLOW AMPS	% OF RATING	FLOW AMPS	OUTAGE	MW	DELTA
KYRENE – JOJOBA 500kV	2647	34%	902	110%	2918	93%	2462	101%	2677	PALOVRDE-ESTRELLA 1 500kV		
KYRENE – JOJOBA 500kV	2647	40%	1044	106%	2805	81%	2150	88%	2340	CORONADO-SILVER KG 1 500kV		
KYRENE – JOJOBA 500kV	2647	34%	896	97%	2554	94%	2494	102%	2702	BROWNING-SILVERKG 1 500kV	5375	1033

Table 4

Transmission Alternative 4

		BENCH MARK OUTAGE CASE 2005		SCENARIO I 5000MW (4342)		Alternative 4		SCENARIO II 5500MW				
EQUIPMENT	RATING AMPS	% OF RATING	FLOW AMPS	% OF RATING	FLOW AMPS	% OF RATING	FLOW AMPS	% OF RATING	FLOW AMPS	OUTAGE	MW	DELTA
KYRENE – JOJOBA 500kV	2647	34%	902	110%	2918	N/A	N/A	N/A	N/A	PALOVRDE-ESTRELLA 1 500kV		
KYRENE – JOJOBA 500kV	2647	40%	1044	106%	2805	86%	2343	96%	2550	CORONADO-SILVER KG 1 500kV		
KYRENE – JOJOBA 500kV	2647	34%	896	97%	2554	99%	2611	107%	2826	BROWNING-SILVERKG 1 500kV	5000	638

Table 5

Transmission Alternative 5

		BENCH MARK OUTAGE CASE 2OO5		SCENARIO I 5000MW (4342)		Alternative 5		SCENARIO II 5500MW				
EQUIPMENT	RATING AMPS	% OF RATING	FLOW AMPS	% OF RATING	FLOW AMPS	% OF RATING	FLOW AMPS	% OF RATING	FLOW AMPS	OUTAGE	MW	DELTA
KYRENE – JOJOBA 500kV	2647	34%	902	110%	2918	89%	2353	96%	2548	PALOVRDE-ESTRELLA 1 500kV		
KYRENE – JOJOBA 500kV	2647	40%	1044	106%	2805	78%	2068	84%	2230	CORONADO-SILVER KG 1 500kV		
KYRENE – JOJOBA 500kV	2647	34%	896	97%	2554	93%	2456	99%	2635	BROWNING-SILVERKG 1 500kV	5500	1158

Table 6

Transmission Alternative 5: Sensitivity 1: Added 230kV System to Southeast Valley (Browning/SilverKing/Hayden)

						Alternative 5		SCENARIO II 6100MW WITH 230KV ALTS				
EQUIPMENT	RATING AMPS	% OF RATING	FLOW AMPS	% OF RATING	FLOW AMPS	% OF RATING	FLOW AMPS	% OF RATING	FLOW AMPS	OUTAGE	MW	DELTA
KYRENE – JOJOBA 500kV	2647							100%	2640	PALOVRDE-ESTRELLA 1 500kV	6100	1758
KYRENE – JOJOBA 500kV	2647							99%	2630	BROWNING-QUEENVLY 1 500kV		

Table 7

Transmission Alternative 5: Sensitivity 2: Added 230kV System to Southeast Valley (Browning/SilverKing/Hayden)

With 2000mw of Generation in the Southeast Valley (Hayden).

						Alternative 5 2000 MW Generation in Southeast Valley		SCENARIO III 6100MW WITH 230KV ALTS				
EQUIPMENT	RATING AMPS	% OF RATING	FLOW AMPS	% OF RATING	FLOW AMPS	% OF RATING	FLOW AMPS	% OF RATING	FLOW AMPS	OUTAGE	MW	DELTA
KYRENE – JOJOBA 500kV	2647							88%	2330	PALOVRDE-ESTRELLA 1 500kV	6100	1758
39KYRENE – JOJOBA 500kV	2647							91%	2397	BROWNING-SILVERKG 1 500kV		

Table 8

Transmission Alternative 5: Sensitivity 2: Added 230kV System to Southeast Valley (Browning/SilverKing/Hayden)

With 2000mw of Generation in the Southeast Valley (Hayden).

						Alternative 5 2000 MW Generation in Southeast Valley		SCENARIO IV 7500MW WITH 230KV ALTS				
EQUIPMENT	RATING AMPS	% OF RATING	FLOW AMPS	% OF RATING	FLOW AMPS	% OF RATING	FLOW AMPS	% OF RATING	FLOW AMPS	OUTAGE	MW	DELTA
KYRENE – JOJOBA 500kV	2647							100%	2657	PALOVRDE-ESTRELLA 1 500kV	7500	3158
KYRENE – JOJOBA 500kV	2647							101%	2681	BROWNING-SILVERKG 1 500kV		

Table 9

Transmission Alternative 6

		BENCH MARK OUTAGE CASE 2005		SCENARIO I 3155MW		Alternative 6		SCENARIO II 3655MW				
EQUIPMENT	RATING AMPS	% OF RATING	FLOW AMPS	% OF RATING	FLOW AMPS	% OF RATING	FLOW AMPS	% OF RATING	FLOW AMPS	OUTAGE	MW	DELTA
SPRINGR – VAIL2 345kV	1351	82%	1114	100 %	1351	89%	1206	99%	1336	SPRINGR-GREENLEE 345kV	3655	500

Table 10

Transmission Alternative 7

		BENCH MARK OUTAGE CASE 2005		SCENARIO I 3155MW		Alternative 7		SCENARIO II 3505MW				
EQUIPMENT	RATING AMPS	% OF RATING	FLOW AMPS	% OF RATING	FLOW AMPS	% OF RATING	FLOW AMPS	% OF RATING	FLOW AMPS	OUTAGE	MW	DELTA
SPRINGR – VAIL2 345kV	1351	82%	1114	100 %	1351	85%	1146	91 %	1223	SPRINGR-GREENLEE 345kV		
SAG-TORTOLITA #1 500kV	1590	31%	489	62%	986	86%	1364	101%	1602	SAG-TORTOLITA #2 500kV	3505	350

Table 11

Transmission Alternative 7A

		BENCH MARK OUTAGE CASE 2005		SCENARIO I 3155MW		Alternative 7A		SCENARIO II 3955MW				
EQUIPMENT	RATING AMPS	% OF RATING	FLOW AMPS	% OF RATING	FLOW AMPS	% OF RATING	FLOW AMPS	% OF RATING	FLOW AMPS	OUTAGE	MW	DELTA
SPRINGR – VAIL2 345kV	1351	82%	1114	100 %	1351	85%	1145	100%	1350	SPRINGR-GREENLEE 345kV	3955	800

Table 12

Transmission Alternative 8

		BENCH MARK OUTAGE CASE 2005		SCENARIO I 3155MW		Alternative 8		SCENARIO II 3355MW				
EQUIPMENT	RATING AMPS	% OF RATING	FLOW AMPS	% OF RATING	FLOW AMPS	% OF RATING	FLOW AMPS	% OF RATING	FLOW AMPS	OUTAGE	MW	DELTA
SPRINGR – VAIL2 345kV	1351	82%	1114	100 %	1351	86%	1159	90%	1217	SPRINGR-GREENLEE 345kV		
APACHE-BUTRFLD 230 kV	840					96%	805	101%	844	WINCHSTR-VAIL 345kV	3355	200

Table 13

Transmission Alternative 8A

		BENCH MARK OUTAGE CASE 2005		SCENARIO I 3155MW		Alternative 8A		SCENARIO II 4055MW				
EQUIPMENT	RATING AMPS	% OF RATING	FLOW AMPS	% OF RATING	FLOW AMPS	% OF RATING	FLOW AMPS	% OF RATING	FLOW AMPS	OUTAGE	MW	DELTA
SPRINGR – VAIL2 345kV	1351	82%	1114	100 %	1351	84%	1130	100%	1354	SPRINGR-GREENLEE 345kV	3955	800

TABLE 14

4260MW Transfer CO-NM Alternative 5 Line Flows (per input file alt5.lin)

CASE ID	CASE NAME	BUS 1	KV	BUS 2	KV	CIRCUIT	STATUS	AREA	ZONE	MW	MVAR	MVA	AMPS	RATING	% RATING	BASE MVA	COMMENT
EHL-00	**BASE CASE OVERLOADS**	**FOURCORN**	**500**	**FOURCORN**	**345**	**1**	**1**	**14**	**141**	**785.1**	**44.7**	**786.4**	**0**	**840**	**93.6**	**786**	**NO PROBLEM**
EHL-00	**BASE CASE OVERLOADS**	**CHOLLA**	**500**	**CHOLLA**	**345**	**2**	**1**	**14**	**140**	**324.9**	**24.1**	**325.8**	**0**	**500**	**65.2**	**325.5**	**NO PROBLEM**
		CO - NM Limiting Equipment								**1110.05**				**0**	**0**		
EHL-01	CHOLLA - FOUR CORNERS 345KV LINE	FOURCORN	500	FOURCORN	345	1	1	14	141	802.1	53.6	803.9	0	840	95.7	786	NO PROBLEM
EHL-01	CHOLLA - FOUR CORNERS 345KV LINE	CHOLLA	500	CHOLLA	345	2	1	14	140	310.8	30.7	312.3	0	500	62.5	325.5	NO PROBLEM
		CO - NM Limiting Equipment								**1112.9**				**0**	**0**		
EHL-02	CHOLLA - PINNACLE PK 345KV LINE	FOURCORN	500	FOURCORN	345	1	1	14	141	763.6	44.3	764.9	0	840	91.1	786	NO PROBLEM
EHL-02	CHOLLA - PINNACLE PK 345KV LINE	CHOLLA	500	CHOLLA	345	2	1	14	140	284.9	23.8	285.9	0	500	57.2	325.5	NO PROBLEM
		CO - NM Limiting Equipment								**1048.48**				**0**	**0**		
EHL-03	CHOLLA - PREACHER CANYON 345KV LINE	FOURCORN	500	FOURCORN	345	1	1	14	141	761.1	44.3	762.4	0	840	90.8	786	NO PROBLEM
EHL-03	CHOLLA - PREACHER CANYON 345KV LINE	CHOLLA	500	CHOLLA	345	2	1	14	140	280.6	21.5	281.4	0	500	56.3	325.5	NO PROBLEM
		CO - NM Limiting Equipment								**1041.71**				**0**	**0**		
EHL-04	CHOLLA - CORONADO 500KV LINE	FOURCORN	500	FOURCORN	345	1	1	14	141	785.1	45.7	786.4	0	840	93.6	786	NO PROBLEM
EHL-04	CHOLLA - CORONADO 500KV LINE	CHOLLA	500	CHOLLA	345	2	1	14	140	320.4	7.7	320.5	0	500	64.1	325.5	NO PROBLEM
		CO - NM Limiting Equipment								**1105.49**				**0**	**0**		
EHL-05	CHOLLA 500 - CHOLLA 345 XFMR	FOURCORN	500	FOURCORN	345	1	1	14	141	794.6	44.8	795.8	0	840	94.7	786	NO PROBLEM
EHL-05	CHOLLA 500 - CHOLLA 345 XFMR	CHOLLA	500	CHOLLA	345	2	1	14	140	562.3	50.3	564.6	0	500	112.9	325.5	OVERLOAD
		CO - NM Limiting Equipment								**1356.88**				**0**	**0**		
EHL-06	CORONADO 500 - CORONADO 345 XFMR	FOURCORN	500	FOURCORN	345	1	1	14	141	849.1	47.4	850.4	0	840	101.2	786	OVERLOAD
EHL-06	CORONADO 500 - CORONADO 345 XFMR	CHOLLA	500	CHOLLA	345	2	1	14	140	444.5	27.7	445.4	0	500	89.1	325.5	NO PROBLEM
		CO - NM Limiting Equipment								**1293.58**				**0**	**0**		
EHL-07	CORONADO 500 - SILVERKG 500KV LINE	FOURCORN	500	FOURCORN	345	1	1	14	141	765	45.1	766.3	0	840	91.2	786	NO PROBLEM
EHL-07	CORONADO 500 - SILVERKG 500KV LINE	CHOLLA	500	CHOLLA	345	2	1	14	140	349	15.4	349.3	0	500	69.9	325.5	NO PROBLEM
		CO - NM Limiting Equipment								**1113.97**				**0**	**0**		
EHL-08	CORONADO 345 - SPRINGR 345KV LINE	FOURCORN	500	FOURCORN	345	1	1	14	141	849	47.4	850.3	0	840	101.2	786	OVERLOAD
EHL-08	CORONADO 345 - SPRINGR 345KV LINE	CHOLLA	500	CHOLLA	345	2	1	14	140	444.5	27.7	445.3	0	500	89.1	325.5	NO PROBLEM
		CO - NM Limiting Equipment								**1293.45**				**0**	**0**		
EHL-10																	
EHL-10	SPRINGR - MCKINLEY 345KV LINE	FOURCORN	500	FOURCORN	345	1	1	14	141	788.9	44.8	790.1	0	840	94.1	786	NO PROBLEM
	SPRINGR - MCKINLEY 345KV LINE	CHOLLA	500	CHOLLA	345	2	1	14	140	328.1	23.9	329	0	500	65.8	325.5	NO PROBLEM
		CO - NM Limiting Equipment								**1117.02**				**0**	**0**		
EHL-11																	
EHL-11	SPRINGR - GREENLEE 345KV LINE	FOURCORN	500	FOURCORN	345	1	1	14	141	756.6	44.5	757.9	0	840	90.2	786	NO PROBLEM
	SPRINGR - GREENLEE 345KV LINE	CHOLLA	500	CHOLLA	345	2	1	14	140	332.8	23.9	333.7	0	500	66.7	325.5	NO PROBLEM
		CO - NM Limiting Equipment								**1089.4**				**0**	**0**		
EHL-13																	
EHL-13	FOUR CORNERS MOENKOPI 500KV LINE	FOURCORN	500	FOURCORN	345	1	1	14	141	747.1	-5.3	747.1	0	840	88.9	786	NO PROBLEM

	FOUR CORNERS MOENKOPI 500KV LINE	CHOLLA	500	CHOLLA	345	2	1	14	140	328.4	24.8	329.3	0	500	65.9	325.5	NO PROBLEM
	CO - NM Limiting Equipment									**1075.47**				**0**	**0**		
EHL-14																	
EHL-14	MOBILE - HAYDEN 500KV LINE	FOURCORN	500	FOURCORN	345	1	1	14	141	794.3	44.3	795.6	0	840	94.7	786	NO PROBLEM
	MOBILE - HAYDEN 500KV LINE	CHOLLA	500	CHOLLA	345	2	1	14	140	314.9	21.1	315.6	0	500	63.1	325.5	NO PROBLEM
	CO - NM Limiting Equipment									**1109.22**				**0**	**0**		
EHL-15																	
EHL-15	CHOLLA - SILVERKG 500KV LINE	FOURCORN	500	FOURCORN	345	1	1	14	141	757.9	46.4	759.3	0	840	90.4	786	NO PROBLEM
	CHOLLA - SILVERKG 500KV LINE	CHOLLA	500	CHOLLA	345	2	1	14	140	391.4	10.4	391.5	0	500	78.3	325.5	NO PROBLEM
	CO - NM Limiting Equipment									**1149.25**				**0**	**0**		
EHL-16																	
EHL-16	SILVERKG - HAYDEN 500KV LINE	FOURCORN	500	FOURCORN	345	1	1	14	141	786.7	44.9	787.9	0	840	93.8	786	NO PROBLEM
	SILVERKG - HAYDEN 500KV LINE	CHOLLA	500	CHOLLA	345	2	1	14	140	322.1	22.3	322.8	0	500	64.6	325.5	NO PROBLEM
	CO - NM Limiting Equipment									**1108.73**				**0**	**0**		
EHL-17																	
EHL-17	MOBILE - SAGUARO 500KV LINE	FOURCORN	500	FOURCORN	345	1	1	14	141	799.2	44.2	800.4	0	840	95.3	786	NO PROBLEM
	MOBILE - SAGUARO 500KV LINE	CHOLLA	500	CHOLLA	345	2	1	14	140	312.6	21.3	313.3	0	500	62.7	325.5	NO PROBLEM
	CO - NM Limiting Equipment									**1111.8**				**0**	**0**		
EHL-18																	
EHL-18	HAYDEN - SAGUARO 500KV LINE	FOURCORN	500	FOURCORN	345	1	1	14	141	785.1	44.8	786.4	0	840	93.6	786	NO PROBLEM
	HAYDEN - SAGUARO 500KV LINE	CHOLLA	500	CHOLLA	345	2	1	14	140	326.9	24	327.8	0	500	65.6	325.5	NO PROBLEM
	CO - NM Limiting Equipment									**1112.05**				**0**	**0**		
EHL-19																	
EHL-19	PALO VERDE - MOBILE 500KV LINE	FOURCORN	500	FOURCORN	345	1	1	14	141	837.8	42.2	838.9	0	840	99.9	786	OVERLOAD
	PALO VERDE - MOBILE 500KV LINE	CHOLLA	500	CHOLLA	345	2	1	14	140	271.2	28	272.6	0	500	54.5	325.5	NO PROBLEM
	CO - NM Limiting Equipment									**1109.02**				**0**	**0**		
EHL-20																	
EHL-20	ESTRELLA - PALOVRDE 500KV LINE	FOURCORN	500	FOURCORN	345	1	1	14	141	793.6	42.9	794.8	0	840	94.6	786	NO PROBLEM
	ESTRELLA - PALOVRDE 500KV LINE	CHOLLA	500	CHOLLA	345	2	1	14	140	336.7	26.9	337.7	0	500	67.5	325.5	NO PROBLEM
	CO - NM Limiting Equipment									**1130.27**				**0**	**0**		
EHL-21																	
EHL-21	KYRENE - JOJOBA 500KV LINE	FOURCORN	500	FOURCORN	345	1	1	14	141	842.7	41.4	843.7	0	840	100.4	786	OVERLOAD
	KYRENE - JOJOBA 500KV LINE	CHOLLA	500	CHOLLA	345	2	1	14	140	292.7	24.9	293.8	0	500	58.8	325.5	NO PROBLEM
	CO - NM Limiting Equipment									**1135.42**				**0**	**0**		
EHL-22																	
EHL-22	BROWNING - SILVERKING 500KV LINE	FOURCORN	500	FOURCORN	345	1	1	14	141	775.2	43.8	776.4	0	840	92.4	786	NO PROBLEM
	BROWNING - SILVERKING 500KV LINE	CHOLLA	500	CHOLLA	345	2	1	14	140	343.2	37	345.2	0	500	69	325.5	NO PROBLEM
	CO - NM Limiting Equipment									**1118.42**				**0**	**0**		
EHL-23																	
EHL-23	PALO VERDE - WESTWING 500KV LINE	FOURCORN	500	FOURCORN	345	1	1	14	141	769.1	42.8	770.3	0	840	91.7	786	NO PROBLEM
	PALO VERDE - WESTWING 500KV LINE	CHOLLA	500	CHOLLA	345	2	1	14	140	340.1	25.9	341.1	0	500	68.2	325.5	NO PROBLEM
	CO - NM Limiting Equipment									**1109.24**				**0**	**0**		

Table 15

4260 MW Transfer to CO_NM - Alternative 1 Line Flows (per input file alt1.lin)

CASE ID	CASE NAME	BUS 1	KV	BUS 2	KV	CIRCUIT	STATUS	AREA	ZONE	MW	MVAR	MVA	AMPS	RATING	% RATING	BASE MVA	COMMENT
EHL-00	**BASE CASE OVERLOADS**	**FOURCORN**	**500**	**FOURCORN**	**345**	**1**	**1**	**14**	**141**	**794.6**	**44.4**	**795.8**	**0**	**840**	**94.7**	**796.1**	**NO PROBLEM**
EHL-00	**BASE CASE OVERLOADS**	**CHOLLA**	**500**	**CHOLLA**	**345**	**2**	**1**	**14**	**140**	**315.1**	**20.6**	**315.8**	**0**	**500**	**63.2**	**316**	**NO PROBLEM**
	CO - NM Limiting Equipment									**1109.72**				**0**	**0**		
EHL-01	CHOLLA - FOUR CORNERS 345KV LINE	FOURCORN	500	FOURCORN	345	1	1	14	141	810.8	53.2	812.5	0	840	96.7	796.1	NO PROBLEM
EHL-01	CHOLLA - FOUR CORNERS 345KV LINE	CHOLLA	500	CHOLLA	345	2	1	14	140	301.9	27.7	303.2	0	500	60.6	316	NO PROBLEM
	CO - NM Limiting Equipment									**1112.73**				**0**	**0**		
EHL-02	CHOLLA - PINNACLE PK 345KV LINE	FOURCORN	500	FOURCORN	345	1	1	14	141	773.3	44.2	774.6	0	840	92.2	796.1	NO PROBLEM
EHL-02	CHOLLA - PINNACLE PK 345KV LINE	CHOLLA	500	CHOLLA	345	2	1	14	140	277.3	20.4	278.1	0	500	55.6	316	NO PROBLEM
	CO - NM Limiting Equipment									**1050.68**				**0**	**0**		
EHL-03	CHOLLA - PREACHER CANYON 345KV LINE	FOURCORN	500	FOURCORN	345	1	1	14	141	771.1	44.2	772.4	0	840	91.9	796.1	NO PROBLEM
EHL-03	CHOLLA - PREACHER CANYON 345KV LINE	CHOLLA	500	CHOLLA	345	2	1	14	140	273	18.1	273.6	0	500	54.7	316	NO PROBLEM
	CO - NM Limiting Equipment									**1044.13**				**0**	**0**		
EHL-04	CHOLLA - CORONADO 500KV LINE	FOURCORN	500	FOURCORN	345	1	1	14	141	794.3	45.4	795.6	0	840	94.7	796.1	NO PROBLEM
EHL-04	CHOLLA - CORONADO 500KV LINE	CHOLLA	500	CHOLLA	345	2	1	14	140	311.8	3.9	311.8	0	500	62.4	316	NO PROBLEM
	CO - NM Limiting Equipment									**1106.12**				**0**	**0**		
EHL-05	CHOLLA 500 - CHOLLA 345 XFMR	FOURCORN	500	FOURCORN	345	1	1	14	141	803.5	44.6	804.7	0	840	95.8	796.1	NO PROBLEM
EHL-05	CHOLLA 500 - CHOLLA 345 XFMR	CHOLLA	500	CHOLLA	345	2	1	14	140	547.1	44	548.8	0	500	109.8	316	OVERLOAD
	CO - NM Limiting Equipment									**1350.58**				**0**	**0**		
EHL-06	CORONADO 500 - CORONADO 345 XFMR	FOURCORN	500	FOURCORN	345	1	1	14	141	856.6	47.1	857.9	0	840	102.1	796.1	OVERLOAD
EHL-06	CORONADO 500 - CORONADO 345 XFMR	CHOLLA	500	CHOLLA	345	2	1	14	140	437.9	23.7	438.6	0	500	87.7	316	NO PROBLEM
	CO - NM Limiting Equipment									**1294.51**				**0**	**0**		
EHL-07	CORONADO 500 - SILVERKG 500KV LINE	FOURCORN	500	FOURCORN	345	1	1	14	141	773.6	44.9	774.9	0	840	92.3	796.1	NO PROBLEM
EHL-07	CORONADO 500 - SILVERKG 500KV LINE	CHOLLA	500	CHOLLA	345	2	1	14	140	339.5	11.3	339.7	0	500	67.9	316	NO PROBLEM
	CO - NM Limiting Equipment									**1113.14**				**0**	**0**		
EHL-08	CORONADO 345 - SPRINGR 345KV LINE	FOURCORN	500	FOURCORN	345	1	1	14	141	856.6	47.1	857.9	0	840	102.1	796.1	OVERLOAD
EHL-08	CORONADO 345 - SPRINGR 345KV LINE	CHOLLA	500	CHOLLA	345	2	1	14	140	437.9	23.7	438.5	0	500	87.7	316	NO PROBLEM
	CO - NM Limiting Equipment									**1294.41**				**0**	**0**		
EHL-10	SPRINGR - MCKINLEY 345KV LINE	FOURCORN	500	FOURCORN	345	1	1	14	141	797.7	44.5	798.9	0	840	95.1	796.1	NO PROBLEM
EHL-10	SPRINGR - MCKINLEY 345KV LINE	CHOLLA	500	CHOLLA	345	2	1	14	140	317.8	20.3	318.5	0	500	63.7	316	NO PROBLEM
	CO - NM Limiting Equipment									**1115.49**				**0**	**0**		
EHL-11	SPRINGR - GREENLEE 345KV LINE	FOURCORN	500	FOURCORN	345	1	1	14	141	765.2	44.3	766.5	0	840	91.3	796.1	NO PROBLEM
EHL-11	SPRINGR - GREENLEE 345KV LINE	CHOLLA	500	CHOLLA	345	2	1	14	140	324.2	20.3	324.8	0	500	65	316	NO PROBLEM
	CO - NM Limiting Equipment									**1089.39**				**0**	**0**		
	FOUR CORNERS MOENKOPI 500KV LINE																
EHL-13	FOUR CORNERS MOENKOPI 500KV LINE	FOURCORN	500	FOURCORN	345	1	1	14	141	747.1	-5.1	747.1	0	840	88.9	796.1	NO PROBLEM
EHL-13		CHOLLA	500	CHOLLA	345	2	1	14	140	319.1	21.1	319.8	0	500	64	316	NO PROBLEM

		CO - NM Limiting Equipment								**1066.15**				**0**	**0**		
	CHOLLA - SAGUARO 500KV LINE																
EHL-14	CHOLLA - SAGUARO 500KV LINE	FOURCORN	500	FOURCORN	345	1	1	14	141	794.6	44.4	795.8	0	840	94.7	796.1	NO PROBLEM
EHL-14		CHOLLA	500	CHOLLA	345	2	1	14	140	315.1	20.6	315.8	0	500	63.2	316	NO PROBLEM
		CO - NM Limiting Equipment								**1109.72**				**0**	**0**		
	CHOLLA - SILVERKG 500KV LINE																
EHL-15	CHOLLA - SILVERKG 500KV LINE	FOURCORN	500	FOURCORN	345	1	1	14	141	766.9	46.1	768.3	0	840	91.5	796.1	NO PROBLEM
EHL-15		CHOLLA	500	CHOLLA	345	2	1	14	140	385.4	9.8	385.5	0	500	77.1	316	NO PROBLEM
		CO - NM Limiting Equipment								**1152.3**				**0**	**0**		
	SILVERKG - SAGUARO 500KV LINE																
EHL-16	SILVERKG - SAGUARO 500KV LINE	FOURCORN	500	FOURCORN	345	1	1	14	141	793.4	44.6	794.6	0	840	94.6	796.1	NO PROBLEM
EHL-16		CHOLLA	500	CHOLLA	345	2	1	14	140	319.2	18.5	319.7	0	500	63.9	316	NO PROBLEM
		CO - NM Limiting Equipment								**1112.56**				**0**	**0**		
	GILARIVR - SAGUARO 500KV LINE																
EHL-17	GILARIVR - SAGUARO 500KV LINE	FOURCORN	500	FOURCORN	345	1	1	14	141	834.5	42.9	835.6	0	840	99.5	796.1	OVERLOAD
EHL-17		CHOLLA	500	CHOLLA	345	2	1	14	140	278.3	18.1	278.9	0	500	55.8	316	NO PROBLEM
		CO - NM Limiting Equipment								**1112.86**				**0**	**0**		
	GILA BEND - SANTA ROSA 230KV LINE																
EHL-18	GILA BEND - SANTA ROSA 230KV LINE	FOURCORN	500	FOURCORN	345	1	1	14	141	796.3	44.4	797.5	0	840	94.9	796.1	NO PROBLEM
EHL-18		CHOLLA	500	CHOLLA	345	2	1	14	140	314.2	20.6	314.9	0	500	63	316	NO PROBLEM
		CO - NM Limiting Equipment								**1110.5**				**0**	**0**		
	PALO VERDE - GILA RIVER 500KV LINE																
EHL-19	PALO VERDE - GILA RIVER 500KV LINE	FOURCORN	500	FOURCORN	345	1	1	14	141	794.1	44.1	795.3	0	840	94.7	796.1	NO PROBLEM
EHL-19		CHOLLA	500	CHOLLA	345	2	1	14	140	315.7	20.7	316.4	0	500	63.3	316	NO PROBLEM
		CO - NM Limiting Equipment								**1109.81**				**0**	**0**		
	ESTRELLA - PALOVRDE 500KV LINE																
EHL-20	ESTRELLA - PALOVRDE 500KV LINE	FOURCORN	500	FOURCORN	345	1	1	14	141	806	42.4	807.1	0	840	96.1	796.1	NO PROBLEM
EHL-20		CHOLLA	500	CHOLLA	345	2	1	14	140	323.5	23.4	324.4	0	500	64.9	316	NO PROBLEM
		CO - NM Limiting Equipment								**1129.52**				**0**	**0**		
	KYRENE - JOJOBA 500KV LINE																
EHL-21	KYRENE - JOJOBA 500KV LINE	FOURCORN	500	FOURCORN	345	1	1	14	141	859.5	40.8	860.5	0	840	102.4	796.1	OVERLOAD
EHL-21		CHOLLA	500	CHOLLA	345	2	1	14	140	271.7	21.7	272.6	0	500	54.5	316	NO PROBLEM
		CO - NM Limiting Equipment								**1131.2**				**0**	**0**		
	BROWNING - SILVERKING 500KV LINE																
EHL-22	BROWNING - SILVERKING 500KV LINE	FOURCORN	500	FOURCORN	345	1	1	14	141	784.5	43.5	785.7	0	840	93.5	796.1	NO PROBLEM
EHL-22		CHOLLA	500	CHOLLA	345	2	1	14	140	332.5	33	334.2	0	500	66.8	316	NO PROBLEM
		CO - NM Limiting Equipment								**1117.02**				**0**	**0**		
	PALO VERDE - WESTWING 500KV LINE																
EHL-23	PALO VERDE - WESTWING 500KV LINE	FOURCORN	500	FOURCORN	345	1	1	14	141	780.1	42.6	781.3	0	840	93	796.1	NO PROBLEM
EHL-23		CHOLLA	500	CHOLLA	345	2	1	14	140	328.1	22.4	328.9	0	500	65.8	316	NO PROBLEM
		CO - NM Limiting Equipment								**1108.24**				**0**	**0**		

Appendices

Appendix 1

Alternative 1

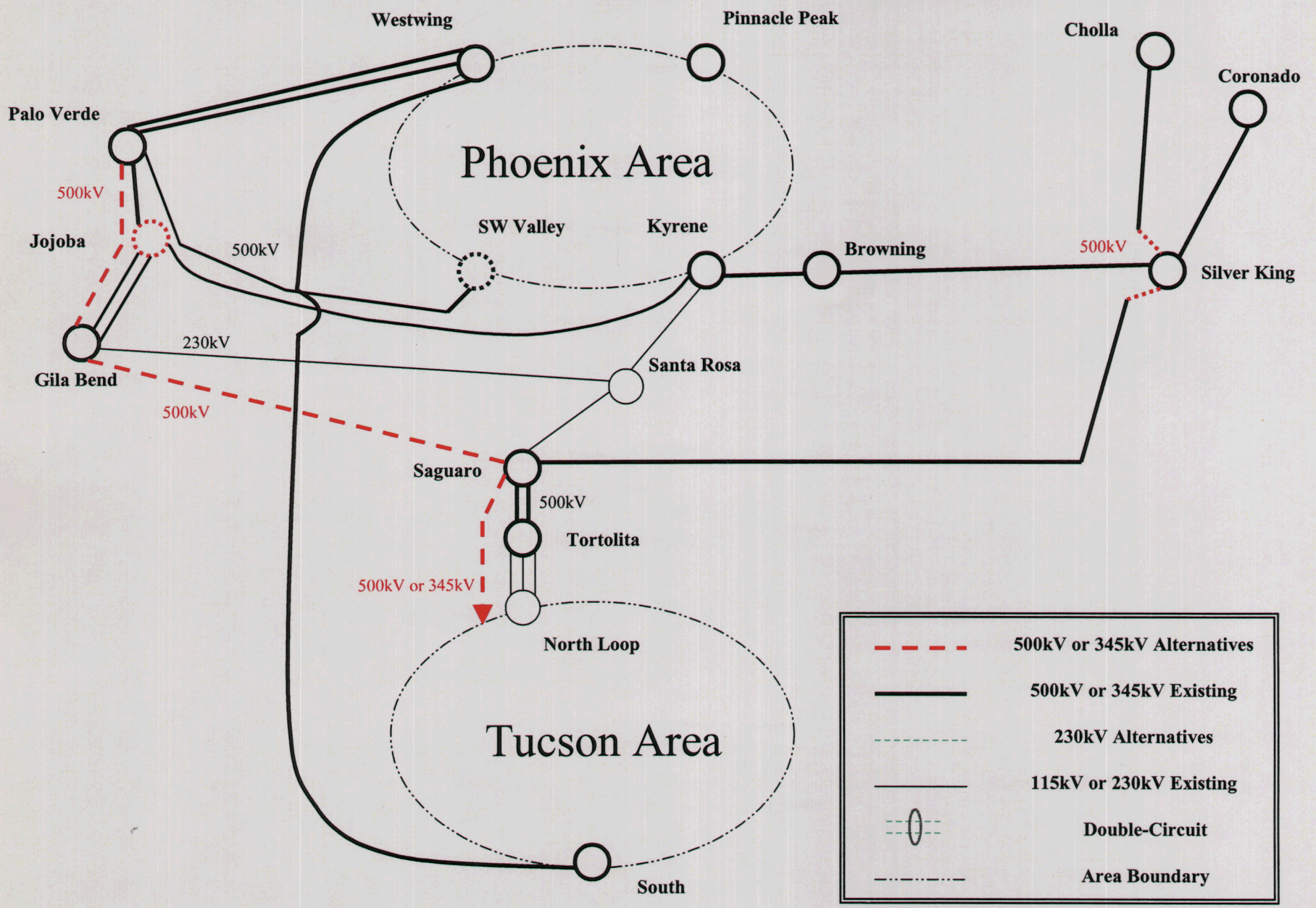

10/17/00 GTR

Appendix 2

Alternative 2

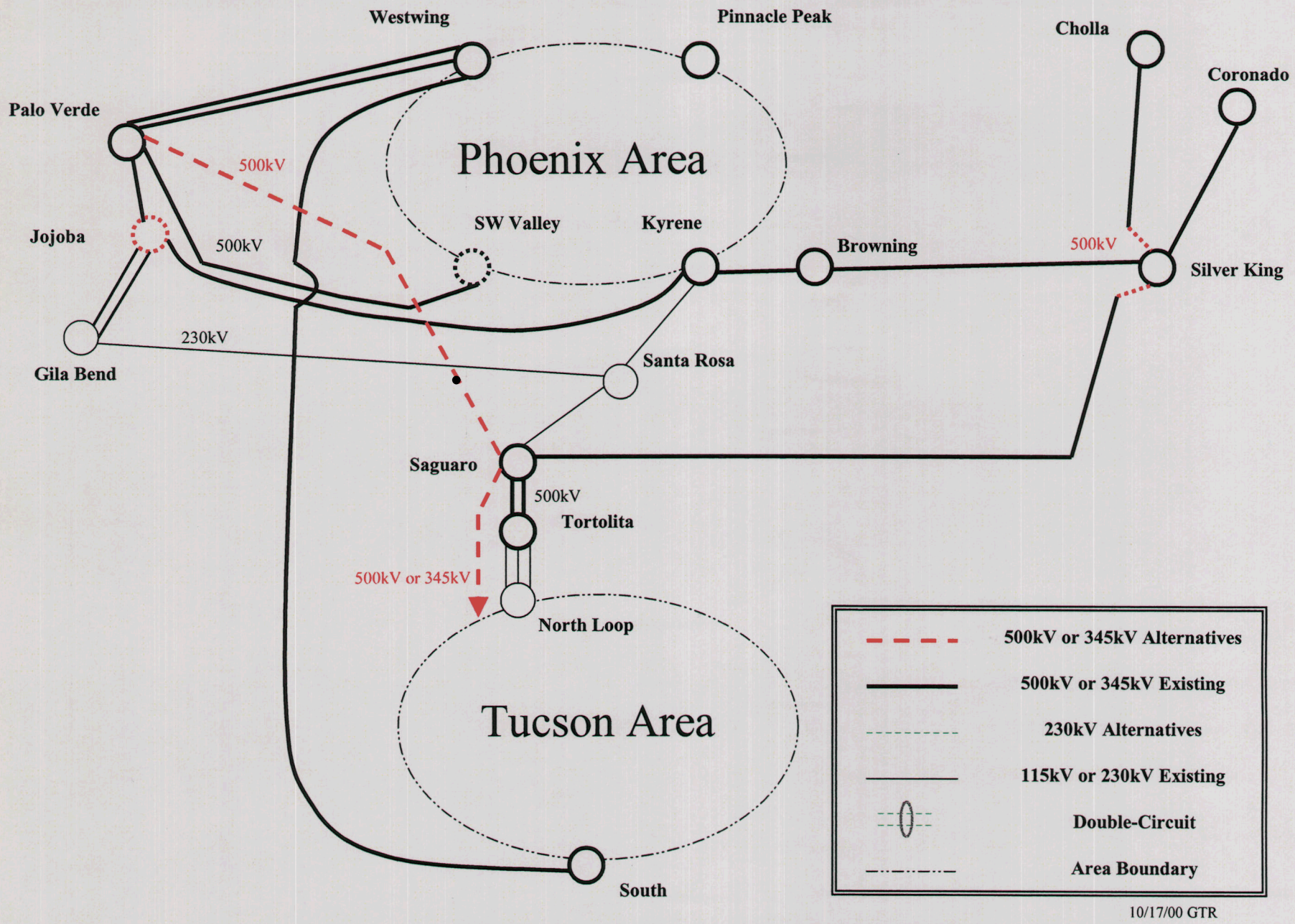

10/17/00 GTR

Appendix 3

Alternative 3 (Deleted)

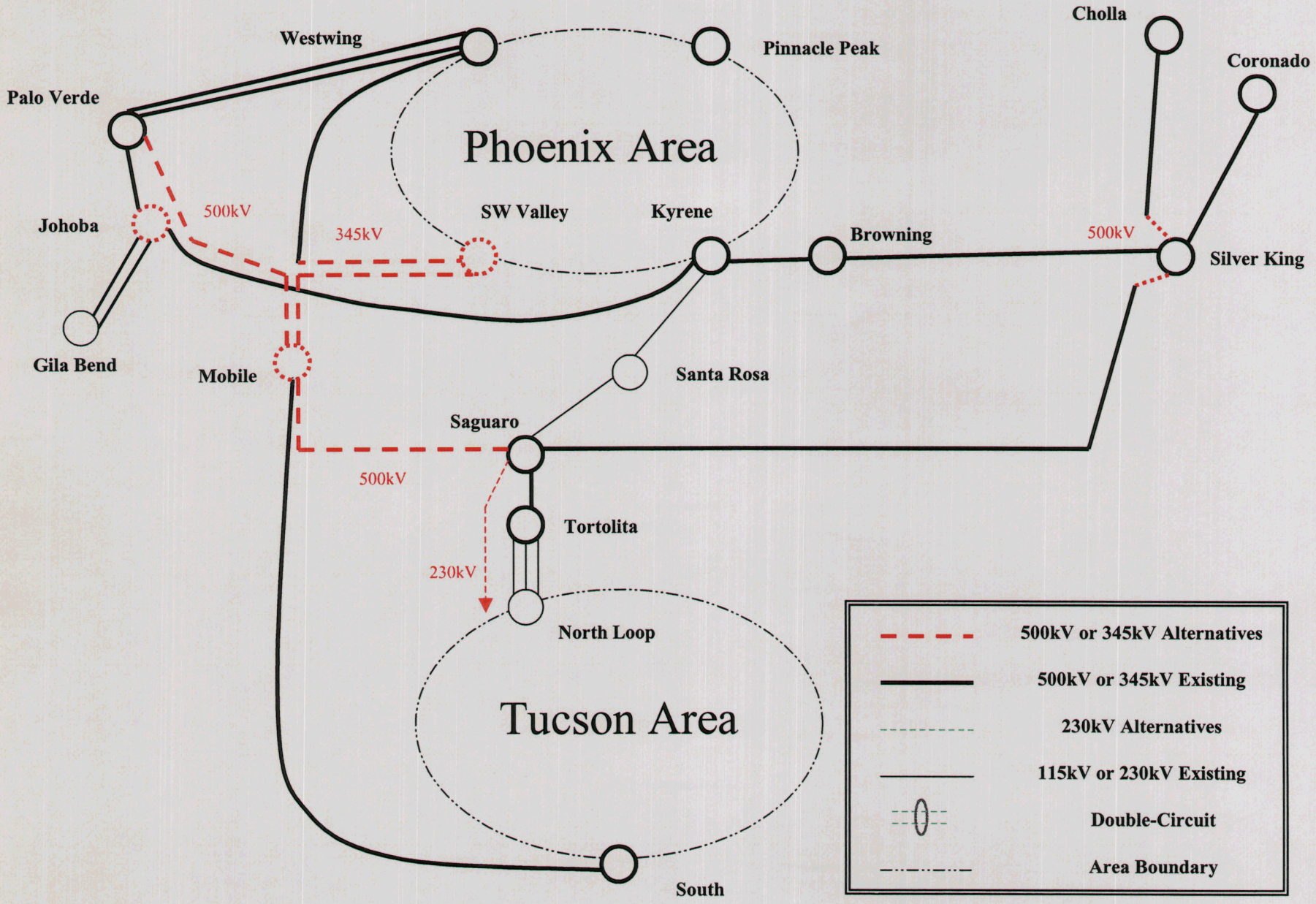

10/17/00 GTR

Appendix 4

Alternative 4

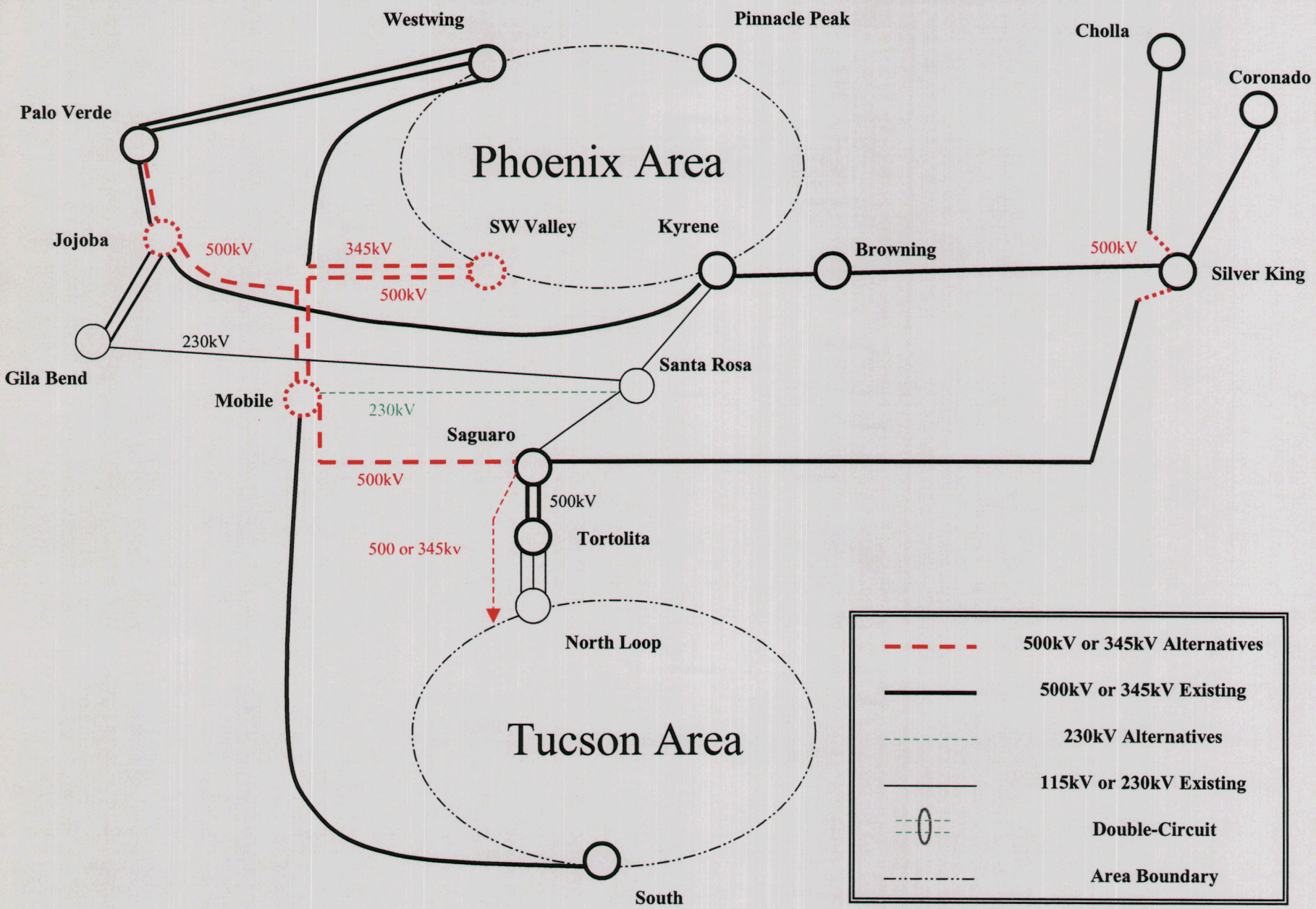

10/17/00 GTR

Appendix 5

Alternative 5

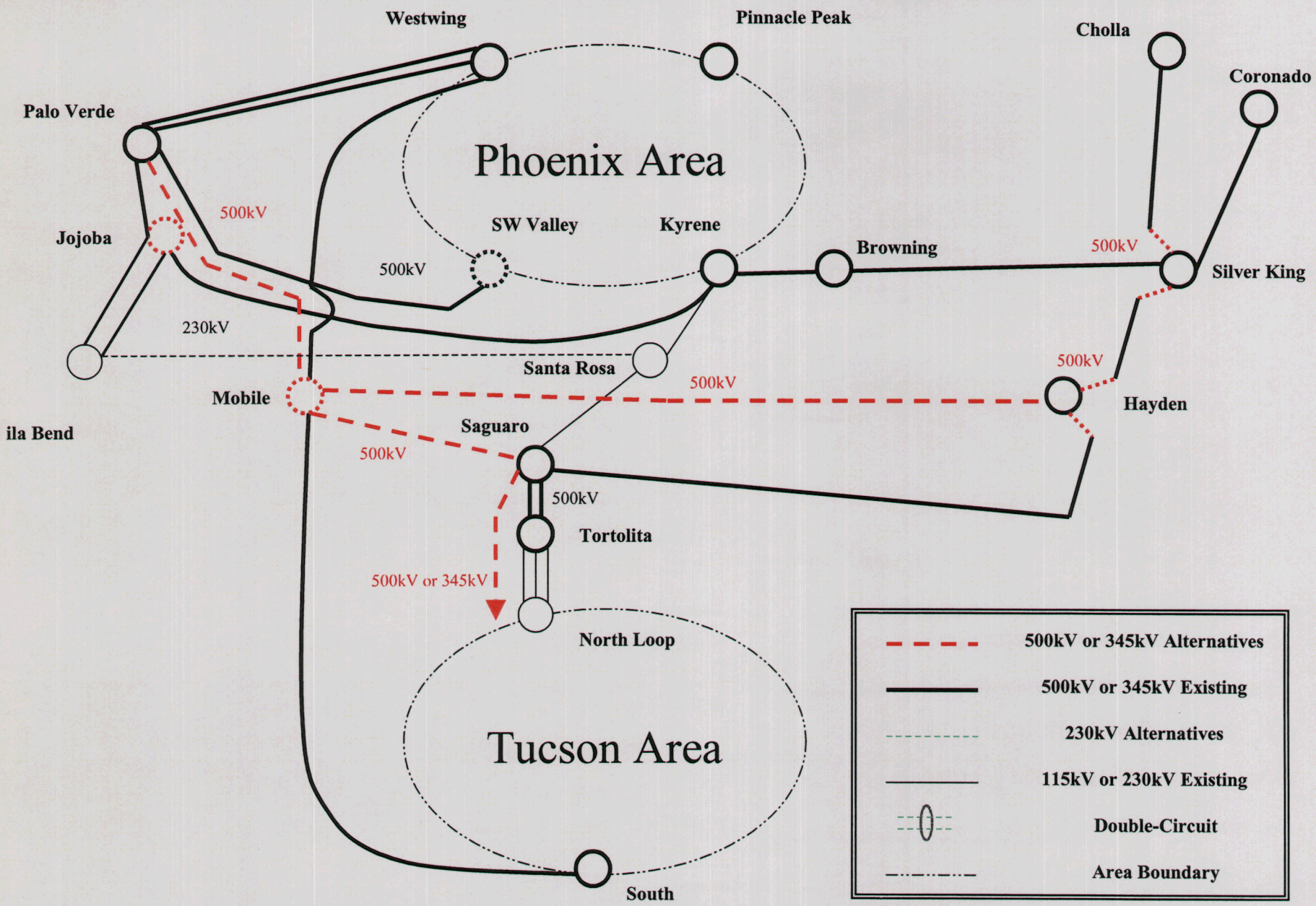

10/17/00 GTR

Appendix 6

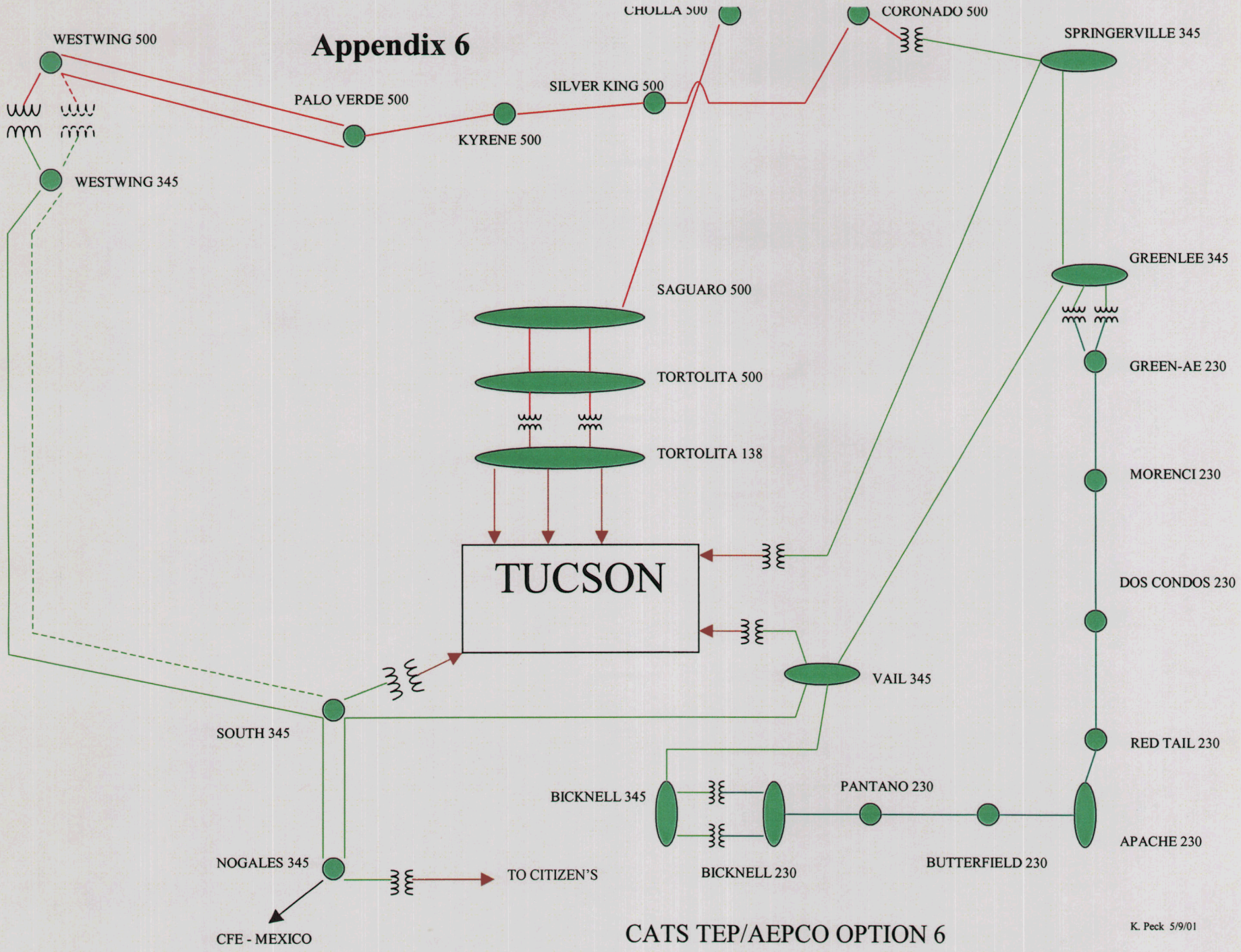

CATS TEP/AEPCO OPTION 6

K. Peck 5/9/01

Appendix 7

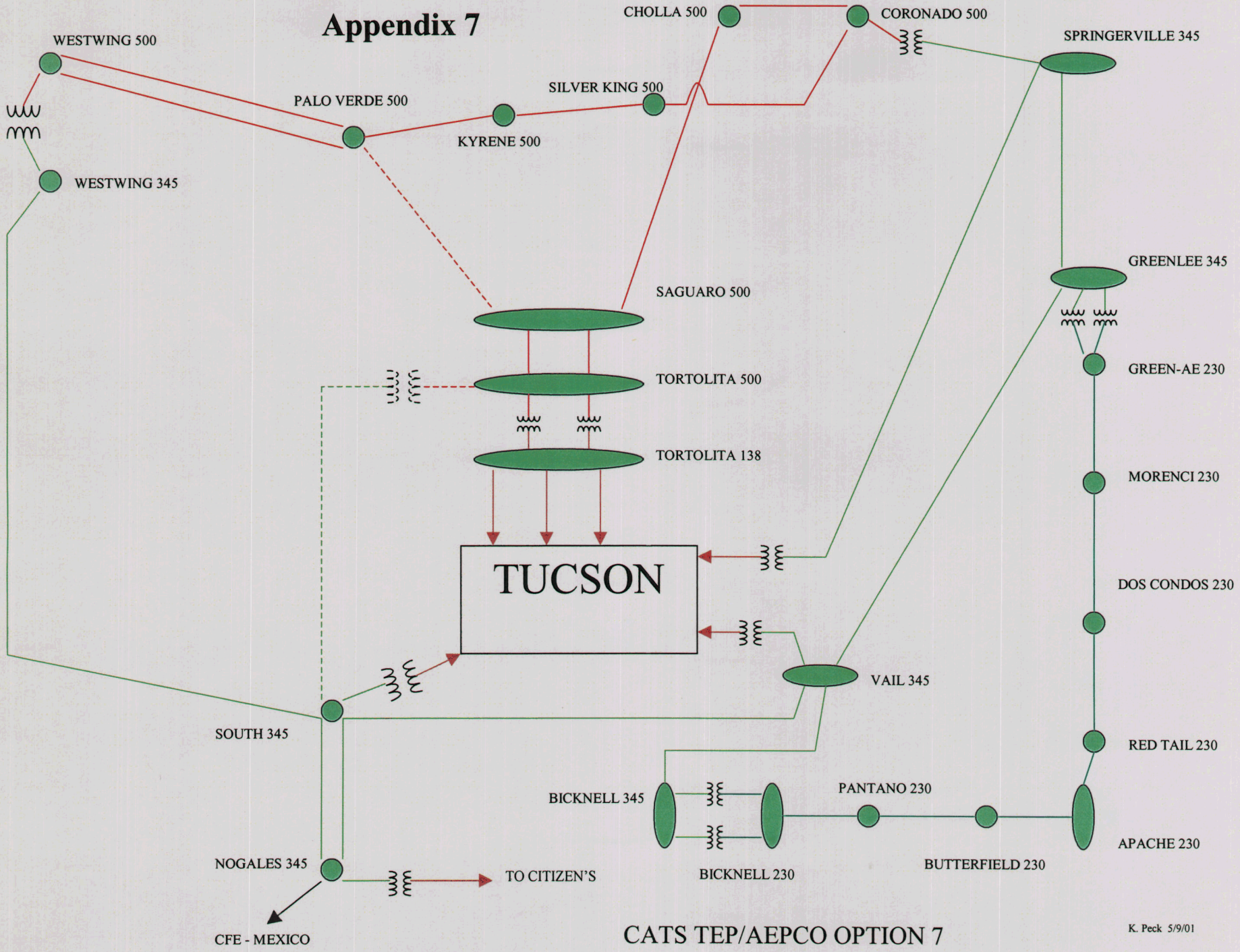

CATS TEP/AEPCO OPTION 7

K. Peck 5/9/01

Appendix 8

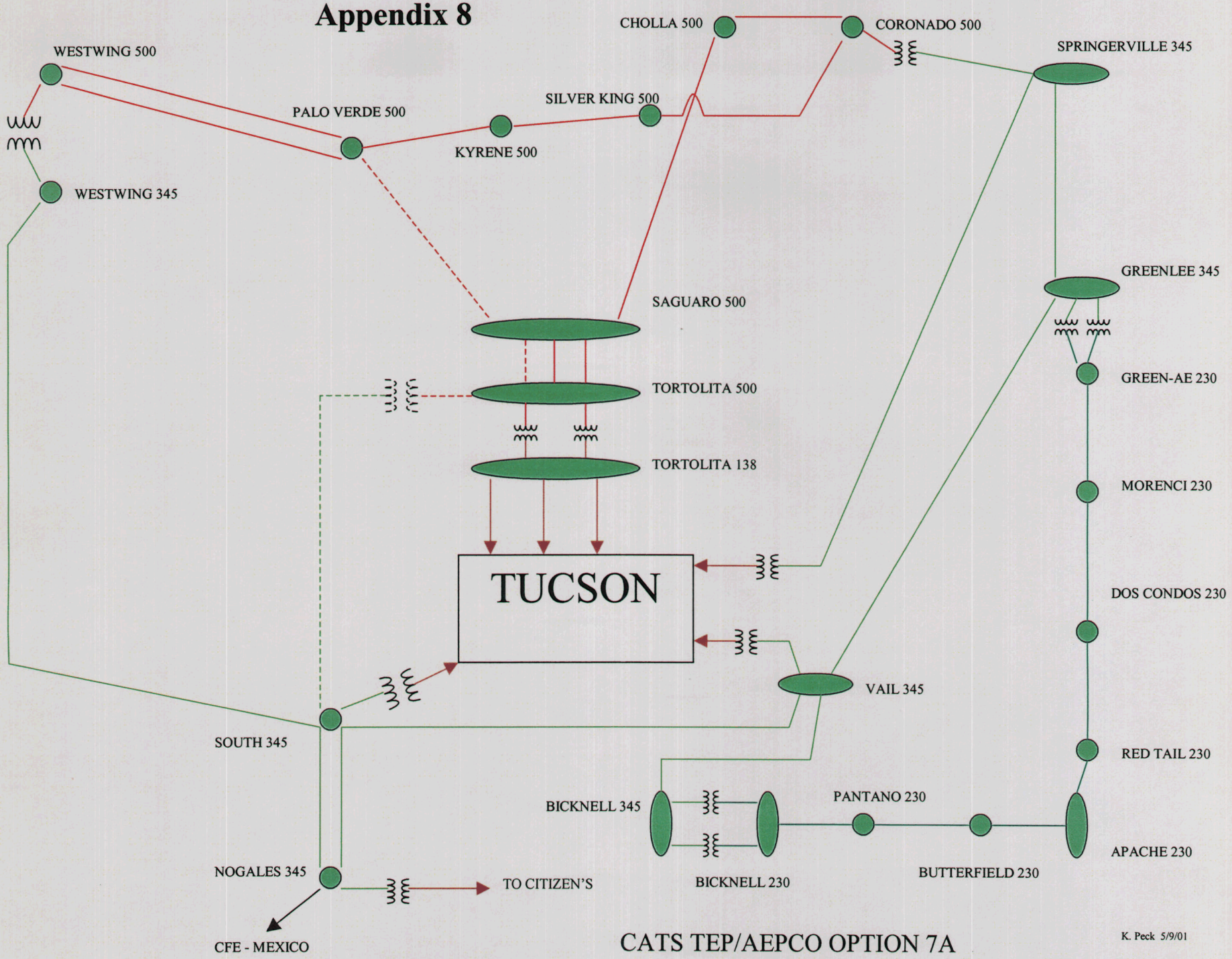

CATS TEP/AEPCO OPTION 7A

K. Peck 5/9/01

Appendix 9

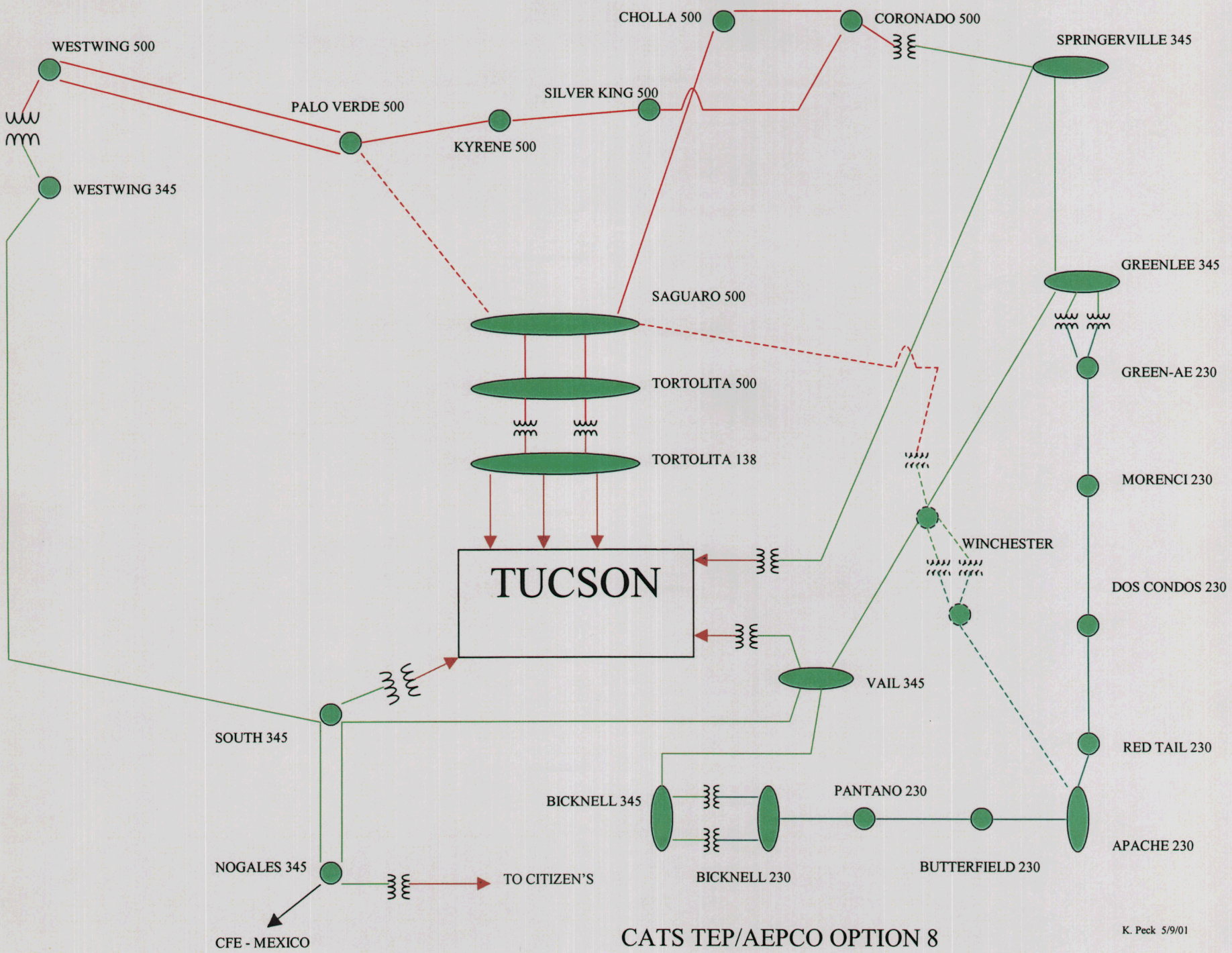
CHOLLA 500
CORONADO 500
SPRINGERVILLE 345
WESTWING 500
SILVER KING 500
PALO VERDE 500
KYRENE 500
WESTWING 345
GREENLEE 345
SAGUARO 500
GREEN-AE 230
TORTOLITA 500
TORTOLITA 138
MORENCI 230
WINCHESTER
TUCSON
DOS CONDOS 230
VAIL 345
SOUTH 345
RED TAIL 230
PANTANO 230
BICKNELL 345
APACHE 230
NOGALES 345
TO CITIZEN'S
BICKNELL 230
BUTTERFIELD 230
CFE - MEXICO
CATS TEP/AEPCO OPTION 8
K. Peck 5/9/01

Appendix 10

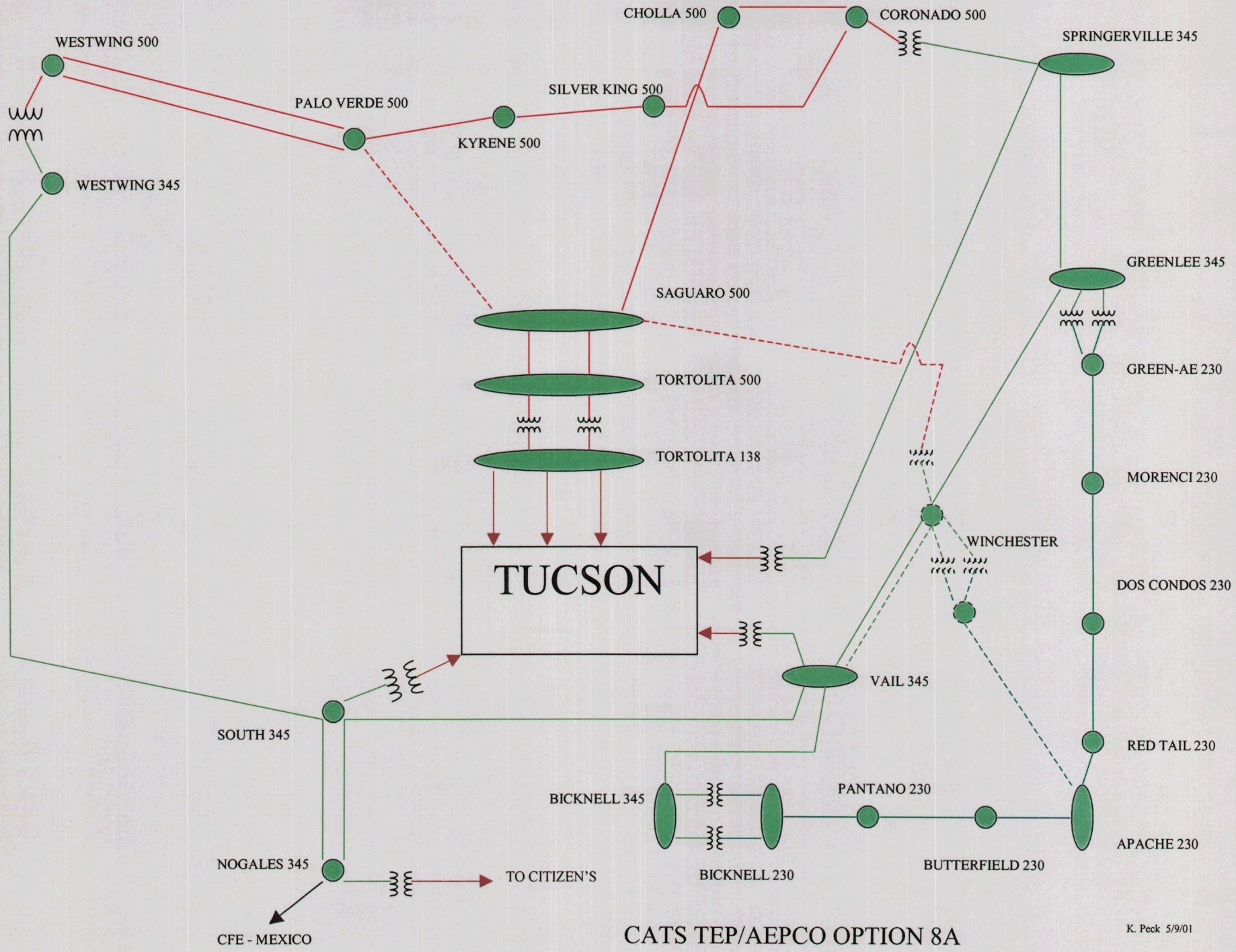
CHOLLA 500
CORONADO 500
SPRINGERVILLE 345
WESTWING 500
SILVER KING 500
PALO VERDE 500
KYRENE 500
WESTWING 345
GREENLEE 345
SAGUARO 500
GREEN-AE 230
TORTOLITA 500
TORTOLITA 138
MORENCI 230
WINCHESTER
TUCSON
DOS CONDOS 230
VAIL 345
SOUTH 345
RED TAIL 230
PANTANO 230
BICKNELL 345
APACHE 230
NOGALES 345
TO CITIZEN'S
BICKNELL 230
BUTTERFIELD 230
CFE - MEXICO
CATS TEP/AEPCO OPTION 8A
K. Peck 5/9/01

Appendix 11

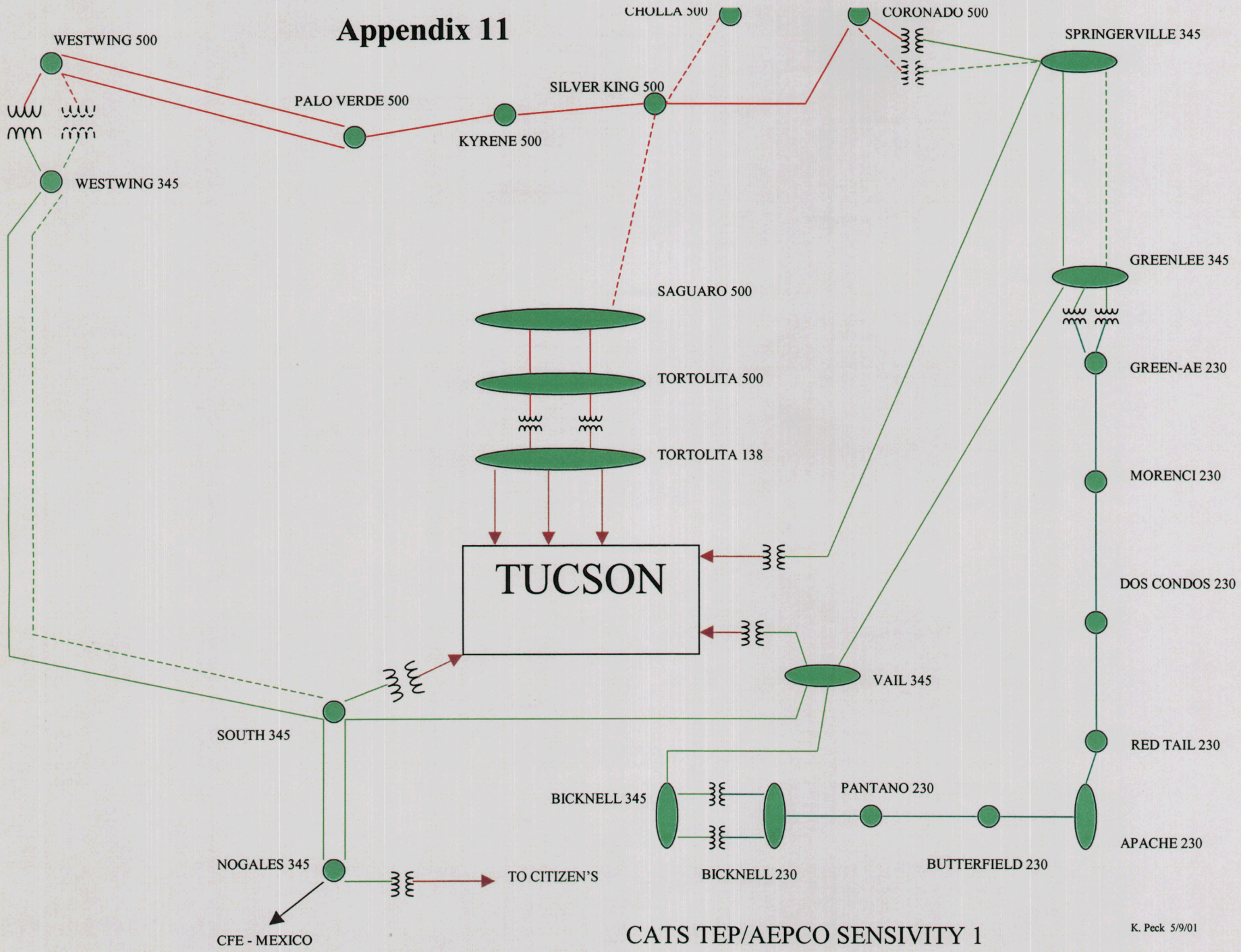

CATS TEP/AEPCO SENSIVITY 1

K. Peck 5/9/01

Appendix 12

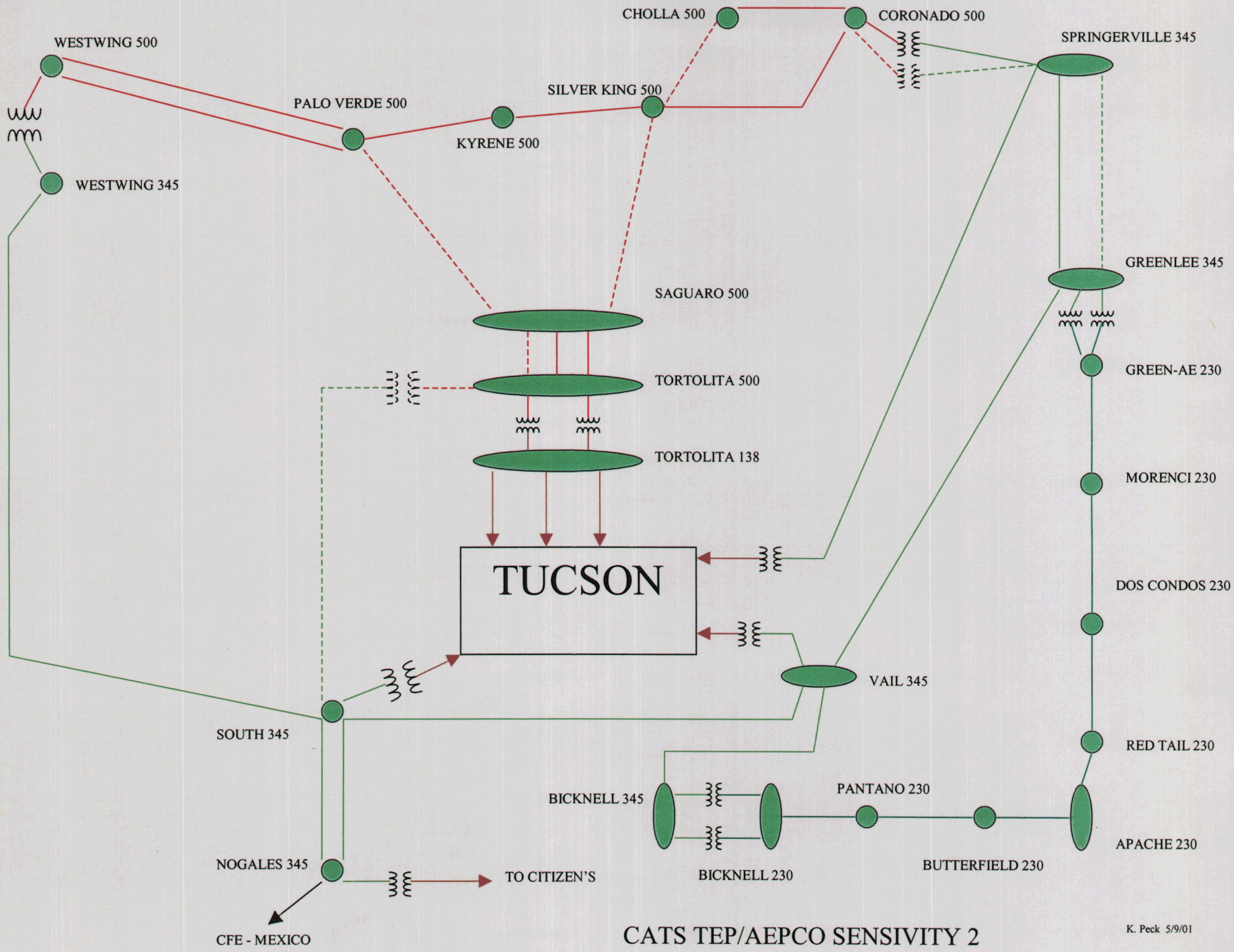
WESTWING 500
WESTWING 345
PALO VERDE 500
KYRENE 500
SILVER KING 500
CHOLLA 500
CORONADO 500
SPRINGERVILLE 345
GREENLEE 345
GREEN-AE 230
MORENCI 230
DOS CONDOS 230
RED TAIL 230
APACHE 230
BUTTERFIELD 230
PANTANO 230
BICKNELL 230
BICKNELL 345
VAIL 345
SAGUARO 500
TORTOLITA 500
TORTOLITA 138
TUCSON
SOUTH 345
NOGALES 345
TO CITIZEN'S
CFE - MEXICO
CATS TEP/AEPCO SENSIVITY 2
K. Peck 5/9/01

Appendix 13

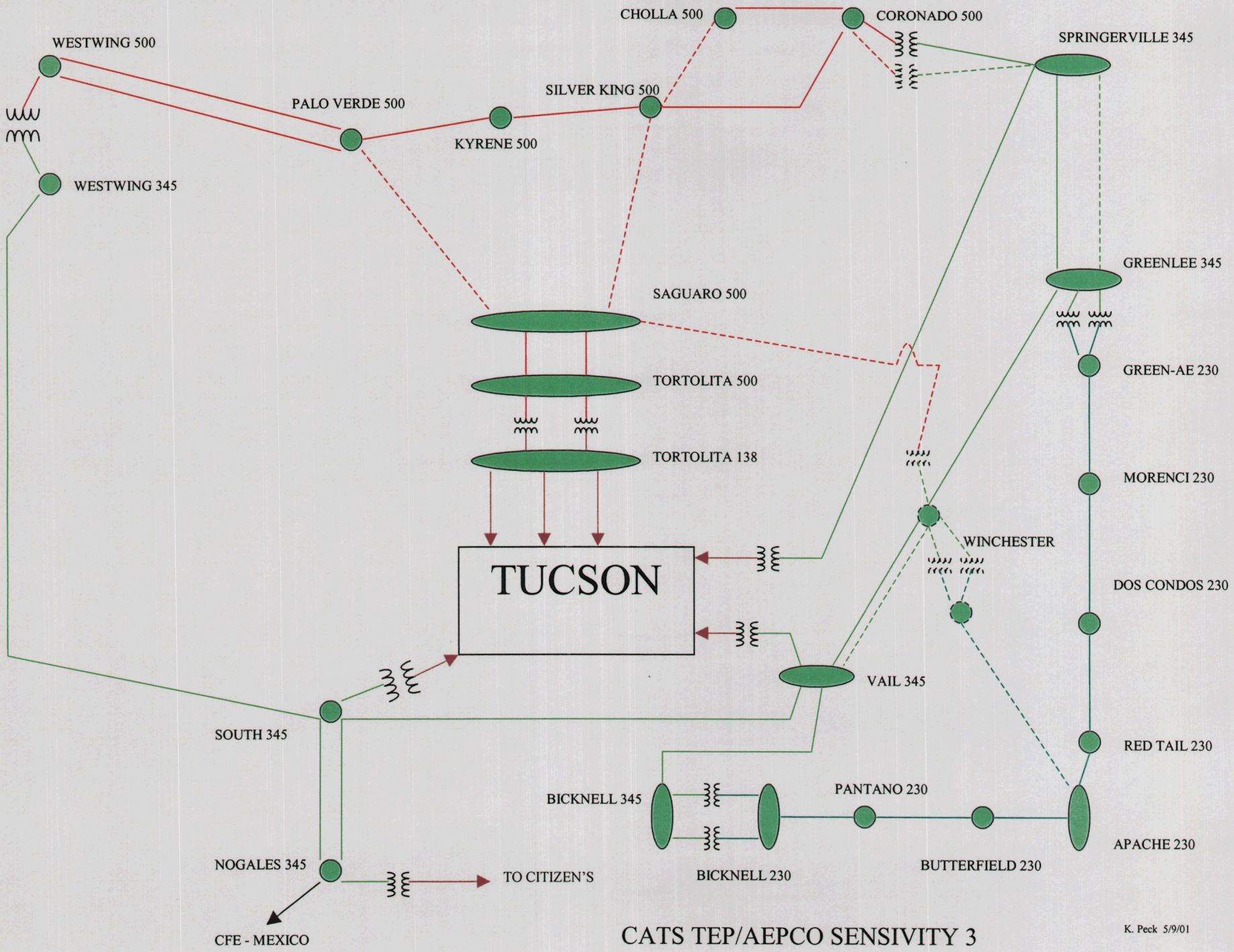

CATS TEP/AEPCO SENSIVITY 3

K. Peck 5/9/01

Onelines

CATS 500 & 345 EHV SYSTEM

Bench-Mark Case Browning-SilverKing 500kV Line Out

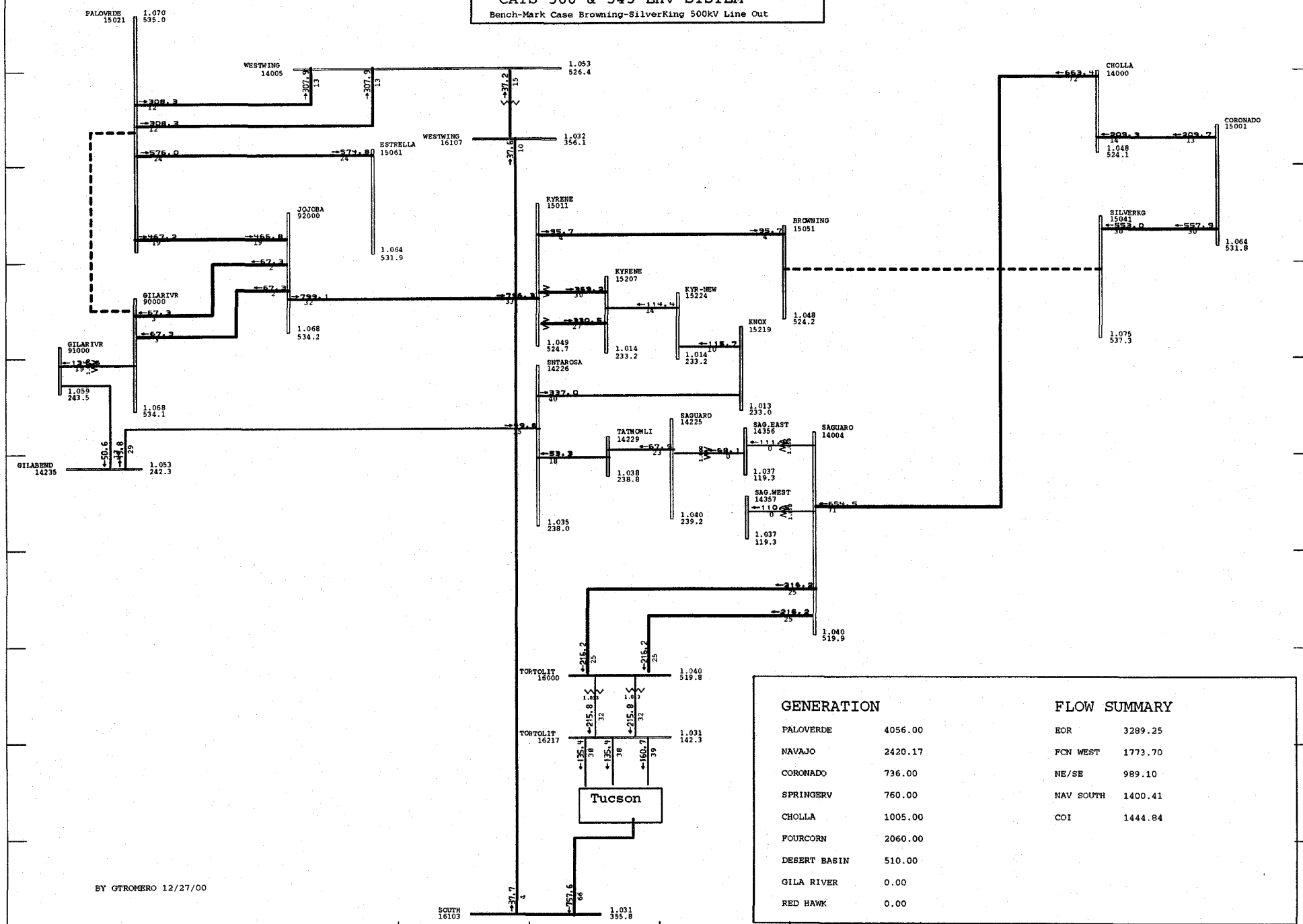

GENERATION

PALOVERDE	4056.00
NAVAJO	2420.17
CORONADO	736.00
SPRINGERV	760.00
CHOLLA	1005.00
FOURCORN	2060.00
DESERT BASIN	510.00
GILA RIVER	0.00
RED HAWK	0.00

FLOW SUMMARY

EOR	3289.25
FCN WEST	1773.70
NE/SE	989.10
NAV SOUTH	1400.41
COI	1444.84

BY GTROMERO 12/27/00

Salt River Project GE-PSLF Program MW/Pct Wed May 09 08:21:20 2001

SRP

CATS CASE REVISION 4 NOVEMBER 3, 2000
CREATED FROM 2002 LS1 WITH 90 PERCENT 2005 HS3 ARIZONA LOADS
AND ANTICIPATED 2005 ARIZONA TOPOLOGY; CATS ALTERNATIVES NOT

PRESENTLY INCLUDED; COMPILED BY K. PECK

p:\users\gtromero\pslf\draw\ca
P:\users\gtromero\pslf\CATS\ca
Rating = 2

CATS 500 & 345 EHV SYSTEM

Bench-Mark Case Coronado-SilverKing 500kV Line Out

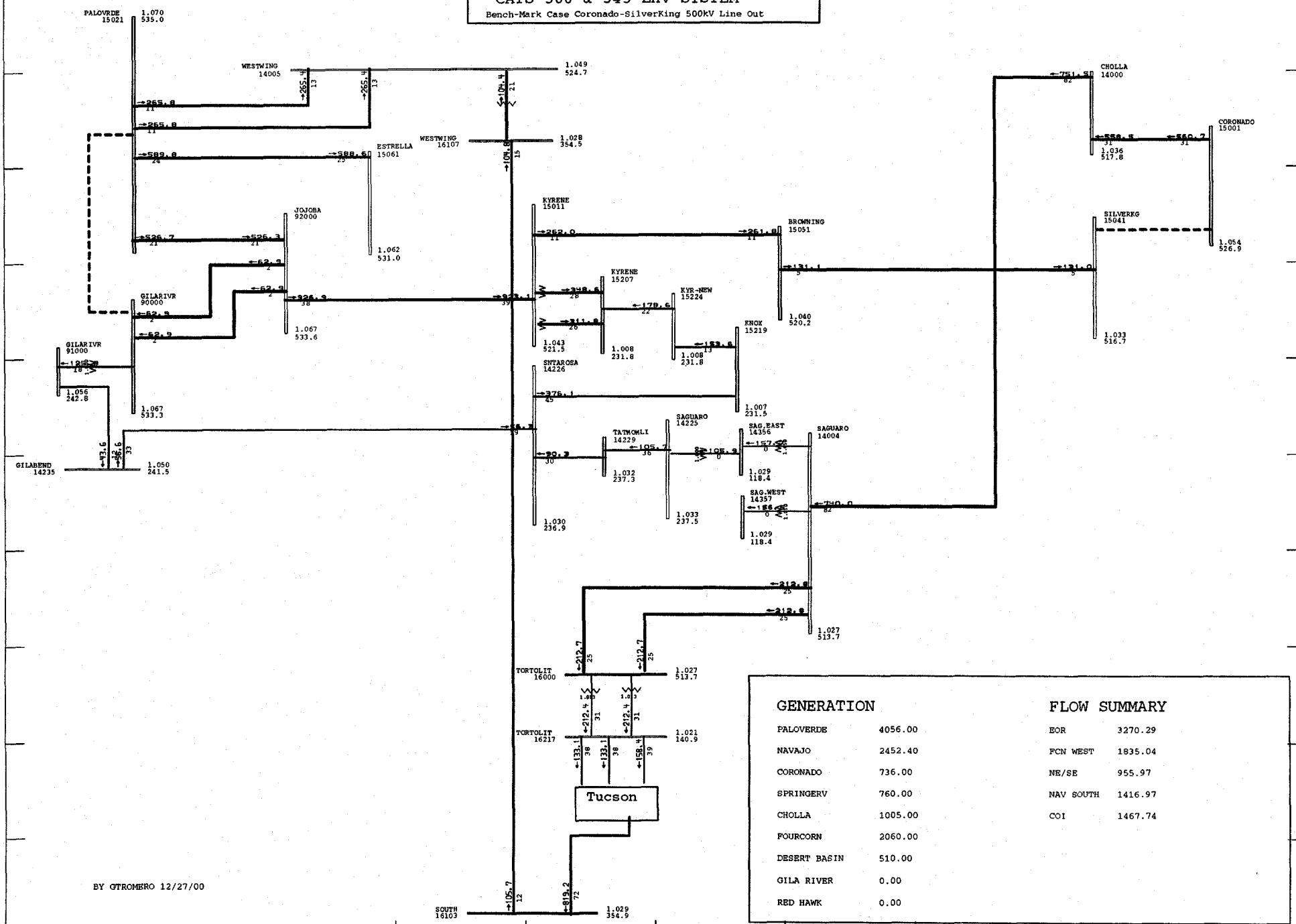

GENERATION

PALOVERDE	4056.00
NAVAJO	2452.40
CORONADO	736.00
SPRINGERV	760.00
CHOLLA	1005.00
FOURCORN	2060.00
DESERT BASIN	510.00
GILA RIVER	0.00
RED HAWK	0.00

FLOW SUMMARY

EOR	3270.29
FCN WEST	1835.04
NE/SE	955.97
NAV SOUTH	1416.97
COI	1467.74

BY GTROMERO 12/27/00

Salt River Project GE-PSLF Program MW/Pct Wed May 09 08:19:19 2001

SRP

CATS CASE REVISION 4 NOVEMBER 3, 2000
CREATED FROM 2002 LS1 WITH 90 PERCENT 2005 HS3 ARIZONA LOADS
AND ANTICIPATED 2005 ARIZONA TOPOLOGY; CATS ALTERNATIVES NOT

PRESENTLY INCLUDED; COMPILED BY K. PECK

p:\users\gtromero\pslf\draw\ca
P:\users\gtromero\pslf\CATS\ca
Rating = 2

CATS 500 & 345 EHV SYSTEM

Bench-Mark Case Palo Verde-Estrella 500kV Line Out

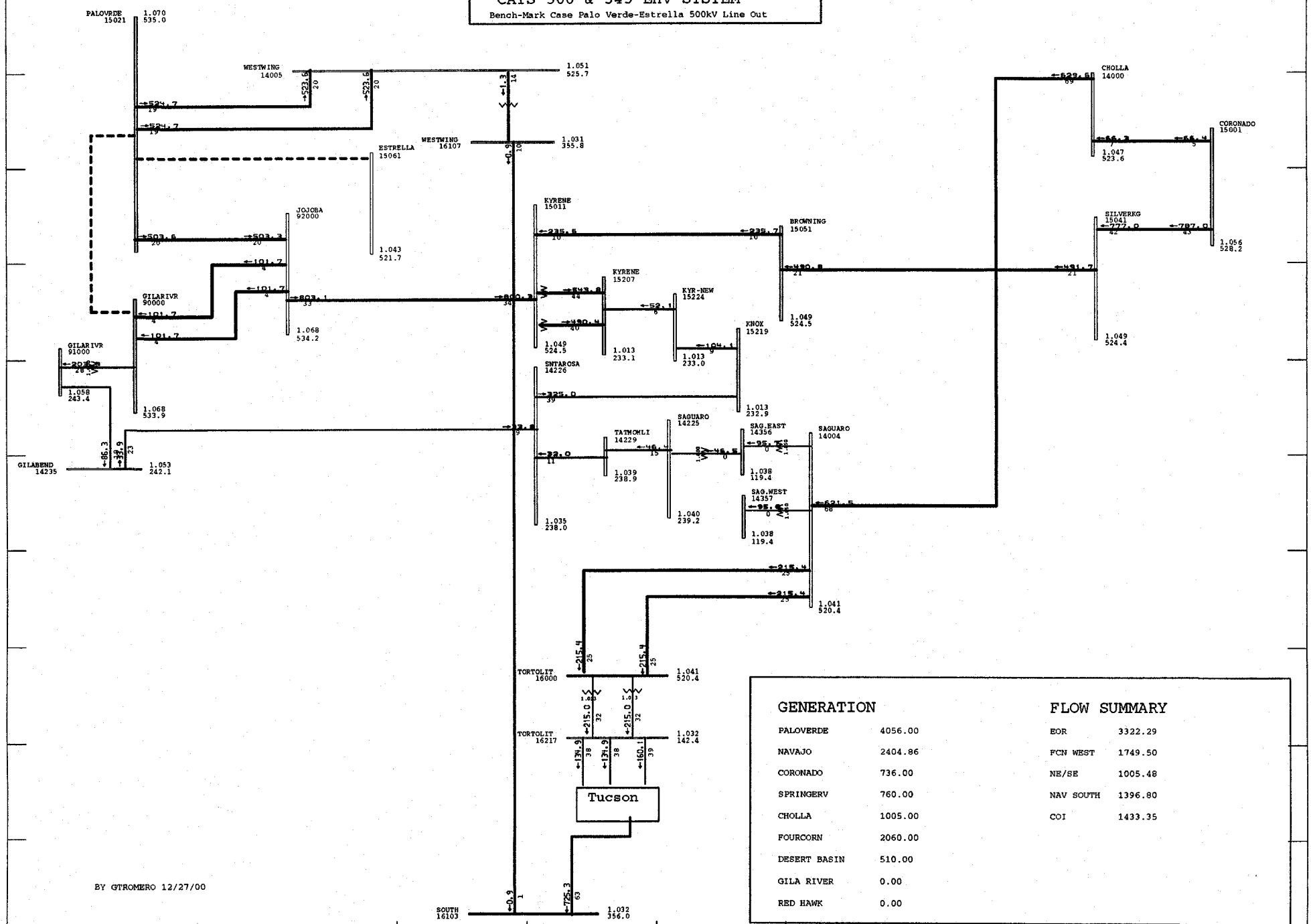

GENERATION

PALOVERDE	4056.00
NAVAJO	2404.86
CORONADO	736.00
SPRINGERV	760.00
CHOLLA	1005.00
FOURCORN	2060.00
DESERT BASIN	510.00
GILA RIVER	0.00
RED HAWK	0.00

FLOW SUMMARY

EOR	3322.29
FCN WEST	1749.50
NE/SE	1005.48
NAV SOUTH	1396.80
COI	1433.35

BY GTROMERO 12/27/00

Salt River Project GE-PSLF Program MW/Pct Tue Apr 24 07:39:55 2001

SRP

CATS CASE REVISION 4 NOVEMBER 3, 2000
CREATED FROM 2002 LS1 WITH 90 PERCENT 2005 HS3 ARIZONA LOADS
AND ANTICIPATED 2005 ARIZONA TOPOLOGY; CATS ALTERNATIVES NOT

PRESENTLY INCLUDED; COMPILED BY K. PECK

p:\users\gtromero\pslf\draw\ca
P:\users\gtromero\pslf\CATS\ca
Rating = 2

CATS 500 & 345 EHV SYSTEM

5000mw Bench-Mark Case Coronado-SilverKing 500kV Line Out

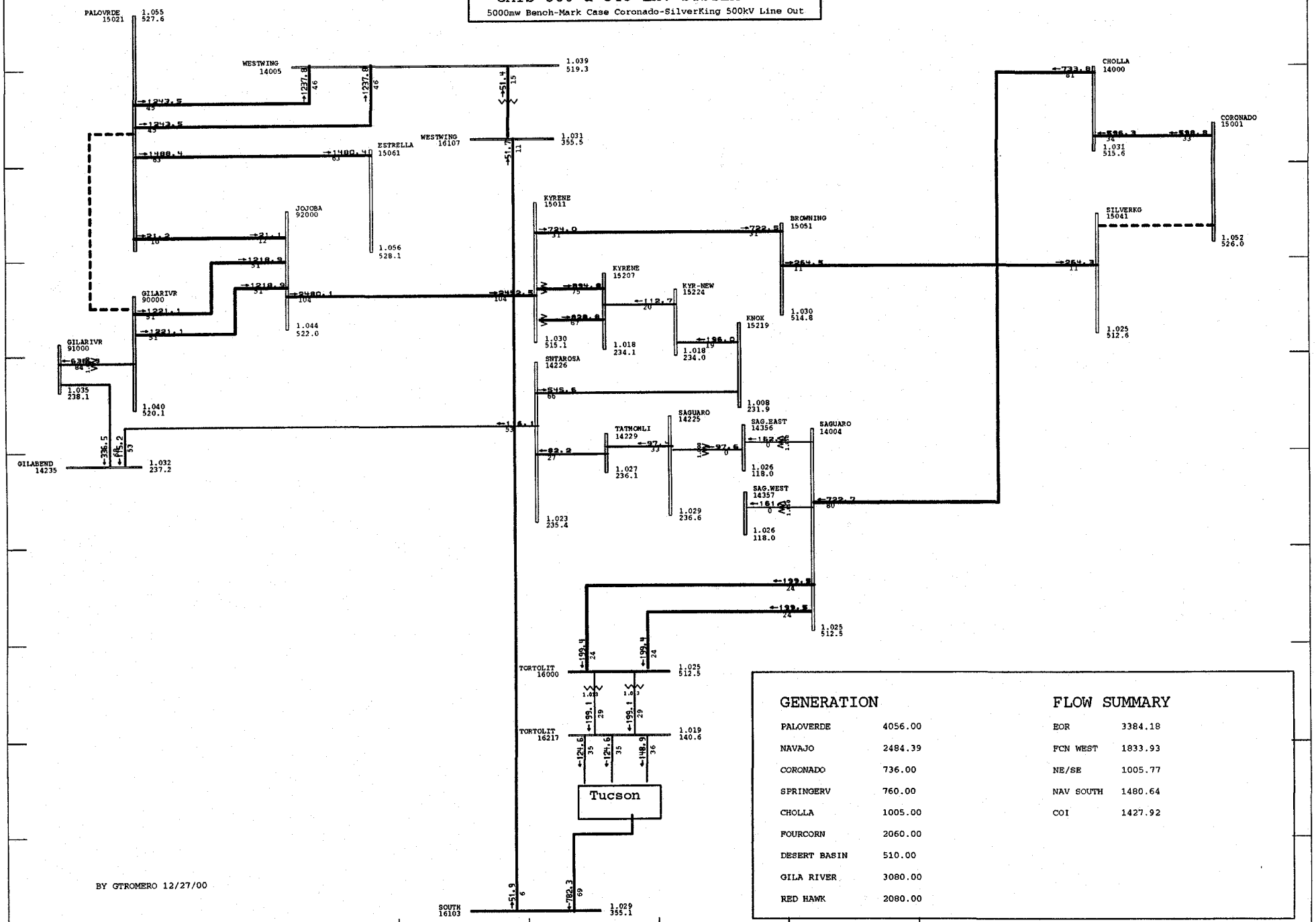

BY GTROMERO 12/27/00

GENERATION

PALOVERDE	4056.00
NAVAJO	2484.39
CORONADO	736.00
SPRINGERV	760.00
CHOLLA	1005.00
FOURCORN	2060.00
DESERT BASIN	510.00
GILA RIVER	3080.00
RED HAWK	2080.00

FLOW SUMMARY

EOR	3384.18
FCN WEST	1833.93
NE/SE	1005.77
NAV SOUTH	1480.64
COI	1427.92

Salt River Project GE-PSLF Program MW/Pct Wed May 09 08:34:23 2001

SRP

CATS CASE REVISION 4 NOVEMBER 3, 2000
CREATED FROM 2002 LS1 WITH 90 PERCENT 2005 HS3 ARIZONA LOADS
AND ANTICIPATED 2005 ARIZONA TOPOLOGY; CATS ALTERNATIVES NOT

PRESENTLY INCLUDED; COMPILED BY K. PECK

p:\users\gtromero\pslf\draw\ca
P:\users\gtromero\pslf\CATS\ca
Rating = 2

CATS 500 & 345 EHV SYSTEM

5000mw Bench_Mark Case Browning-SilverKing 500kV Line Out

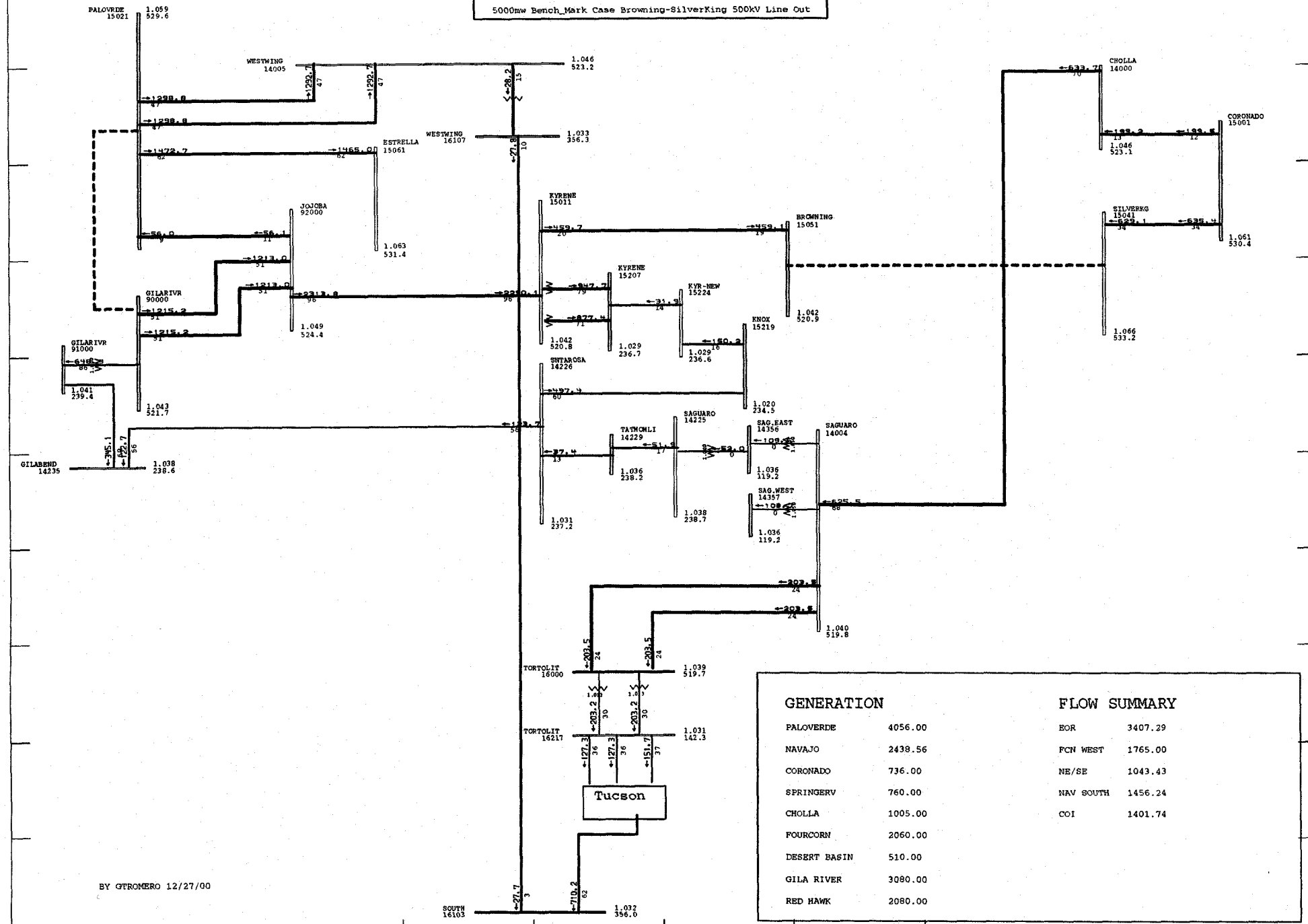

GENERATION	
PALOVERDE	4056.00
NAVAJO	2438.56
CORONADO	736.00
SPRINGERV	760.00
CHOLLA	1005.00
FOURCORN	2060.00
DESERT BASIN	510.00
GILA RIVER	3080.00
RED HAWK	2080.00

FLOW SUMMARY	
EOR	3407.29
FCN WEST	1765.00
NE/SE	1043.43
NAV SOUTH	1456.24
COI	1401.74

BY GTROMERO 12/27/00

Salt River Project GE-PSLF Program MW/Pct Wed May 09 08:35:57 2001

SRP

CATS CASE REVISION 4 NOVEMBER 3, 2000
CREATED FROM 2002 LS1 WITH 90 PERCENT 2005 HS3 ARIZONA LOADS
AND ANTICIPATED 2005 ARIZONA TOPOLOGY; CATS ALTERNATIVES NOT

PRESENTLY INCLUDED; COMPILED BY K. PECK

p:\users\gtromero\pslf\draw\ca
P:\users\gtromero\pslf\CATS\ca
Rating = 2

CATS 500 & 345 EHV SYSTEM

5000mw Bench-Mark Case Palo Verde-Estrella 500kV Line Out

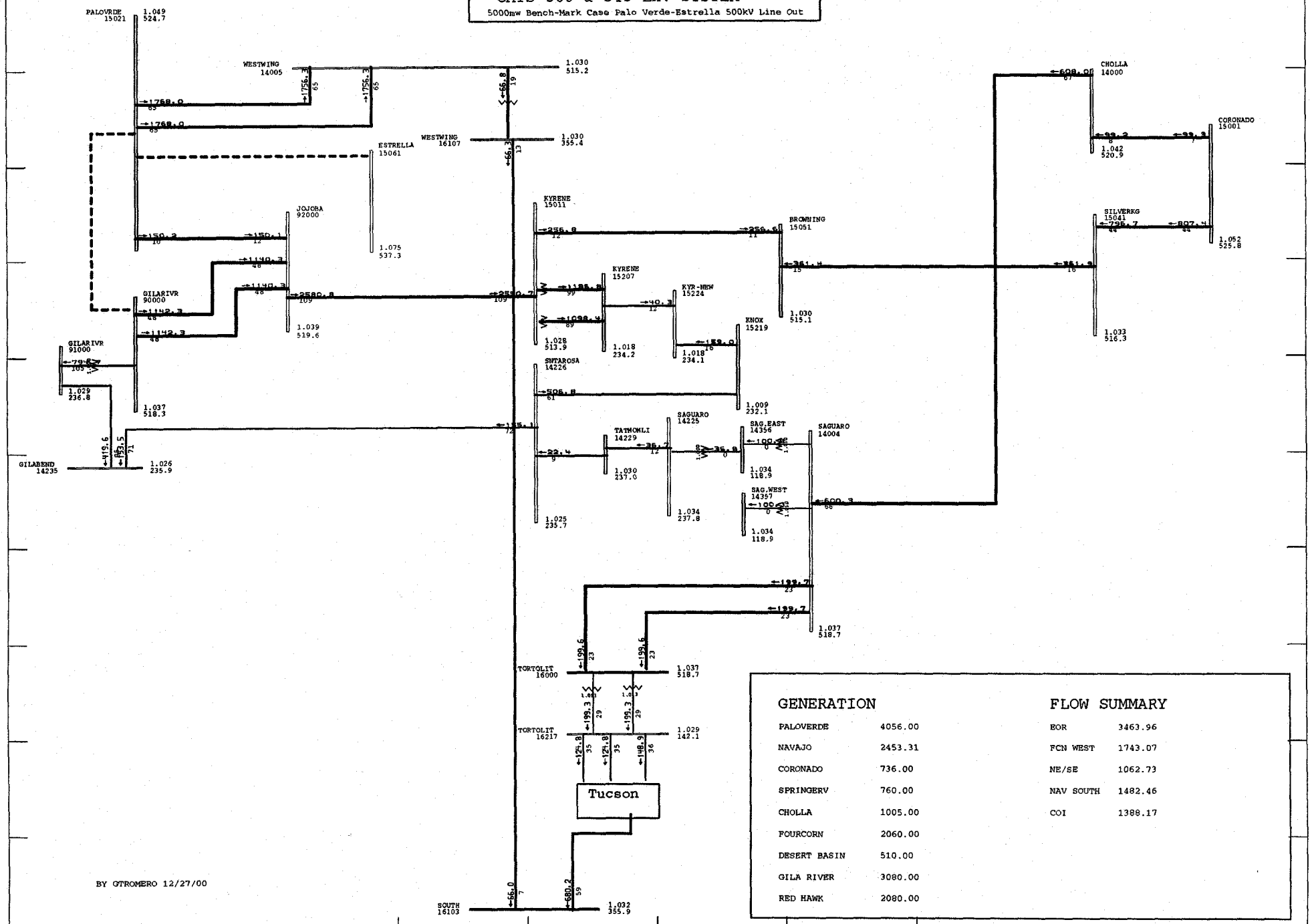

GENERATION

PALOVERDE	4056.00
NAVAJO	2453.31
CORONADO	736.00
SPRINGERV	760.00
CHOLLA	1005.00
FOURCORN	2060.00
DESERT BASIN	510.00
GILA RIVER	3080.00
RED HAWK	2080.00

FLOW SUMMARY

EOR	3463.96
FCN WEST	1743.07
NE/SE	1062.73
NAV SOUTH	1482.46
COI	1388.17

BY GTROMERO 12/27/00

Salt River Project GE-PSLF Program MW/Pct Wed May 09 08:32:27 2001

SRP

CATS CASE REVISION 4 NOVEMBER 3, 2000
CREATED FROM 2002 LS1 WITH 90 PERCENT 2005 HS3 ARIZONA LOADS
AND ANTICIPATED 2005 ARIZONA TOPOLOGY; CATS ALTERNATIVES NOT

PRESENTLY INCLUDED; COMPILED BY K. PECK

p:\users\gtromero\pslf\draw\ca
P:\users\gtromero\pslf\CATS\ca
Rating = 2

CATS 500 & 345 EHV SYSTEM

5000mw Alternative_1 Palo Verde-Estrella 500kV Line Out

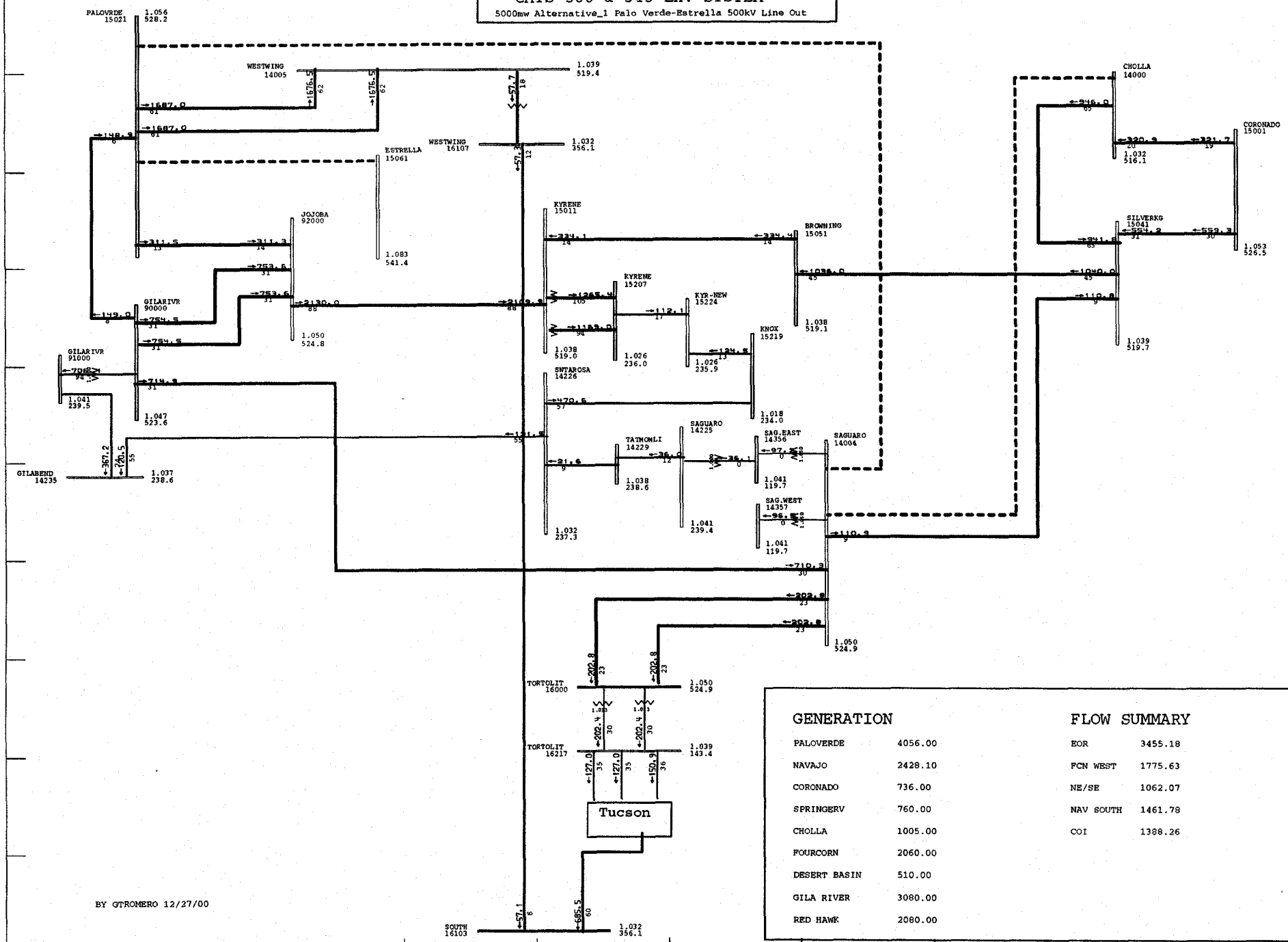

BY GTROMERO 12/27/00

GENERATION

PALOVERDE	4056.00
NAVAJO	2428.10
CORONADO	736.00
SPRINGERV	760.00
CHOLLA	1005.00
FOURCORN	2060.00
DESERT BASIN	510.00
GILA RIVER	3080.00
RED HAWK	2080.00

FLOW SUMMARY

EOR	3455.18
FCN WEST	1775.63
NE/SE	1062.07
NAV SOUTH	1461.78
COI	1388.26

Salt River Project GE-PSLP Program MW/Pct Tue Apr 24 08:52:30 2001

SRP

CATS CASE REVISION 4 NOVEMBER 3, 2000
CREATED FROM 2002 LS1 WITH 90 PERCENT 2005 HS3 ARIZONA LOADS
AND ANTICIPATED 2005 ARIZONA TOPOLOGY; CATS ALTERNATIVES NOT

PRESENTLY INCLUDED; COMPILED BY K. PECK

p:\users\gtromero\pslf\draw\ca
P:\users\gtromero\pslf\CATS\ca
Rating = 2

CATS 500 & 345 EHV SYSTEM

5000mw Alternative_2 Browning-SilverKing 500kV Line Out

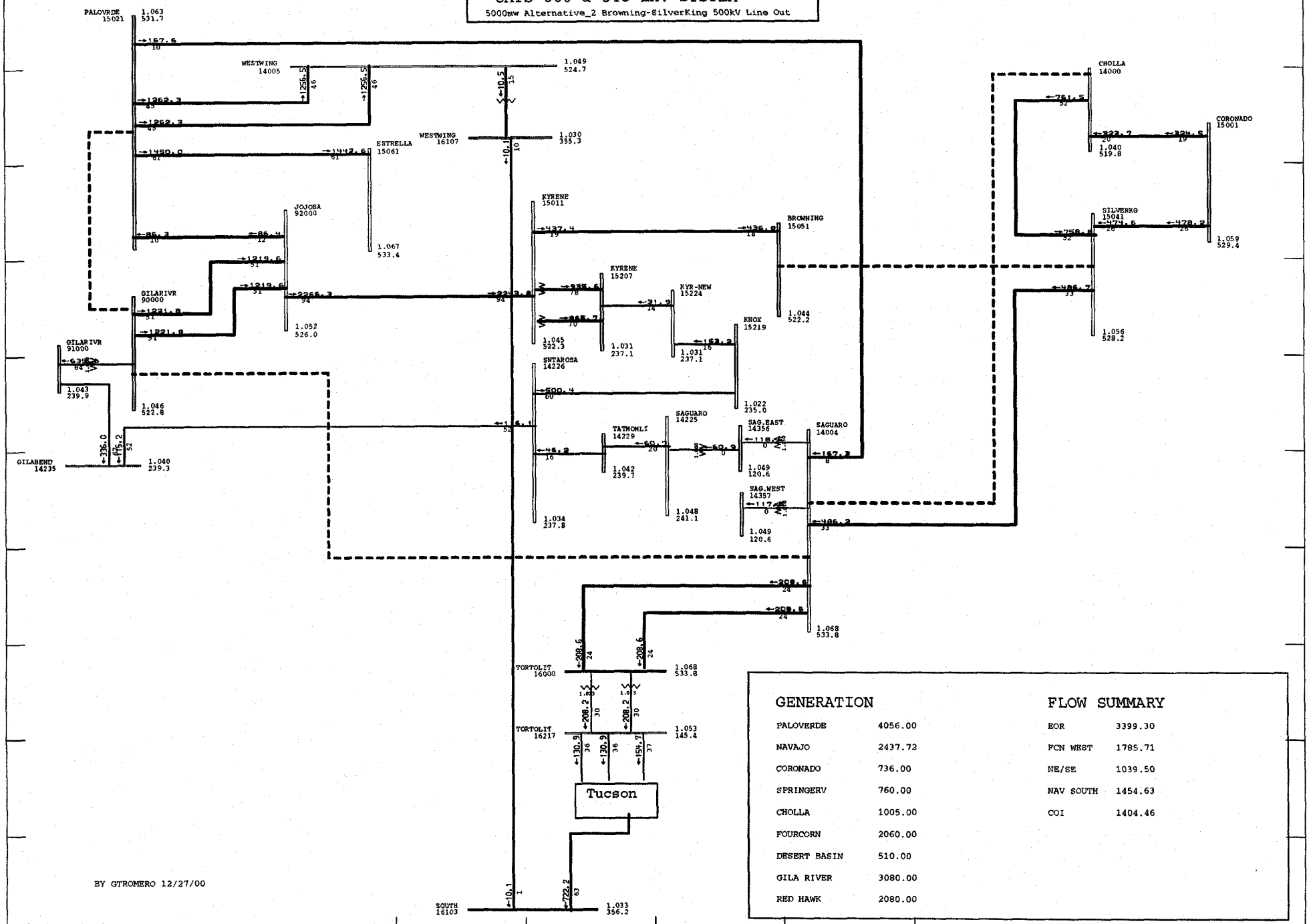

GENERATION

PALOVERDE	4056.00
NAVAJO	2437.72
CORONADO	736.00
SPRINGERV	760.00
CHOLLA	1005.00
FOURCORN	2060.00
DESERT BASIN	510.00
GILA RIVER	3080.00
RED HAWK	2080.00

FLOW SUMMARY

EOR	3399.30
FCN WEST	1785.71
NE/SE	1039.50
NAV SOUTH	1454.63
COI	1404.46

Salt River Project GE-PSLF Program MW/Pct Wed May 09 09:23:29 2001

SRP

CATS CASE REVISION 4 NOVEMBER 3, 2000
CREATED FROM 2002 LS1 WITH 90 PERCENT 2005 HS3 ARIZONA LOADS
AND ANTICIPATED 2005 ARIZONA TOPOLOGY; CATS ALTERNATIVES NOT

PRESENTLY INCLUDED; COMPILED BY K. PECK

p:\users\gtromero\pslf\draw\ca
P:\users\gtromero\pslf\CATS\ca
Rating = 2

CATS 500 & 345 EHV SYSTEM

5000mw Alternative_1 Browning-SilverKing 500kV Line Out

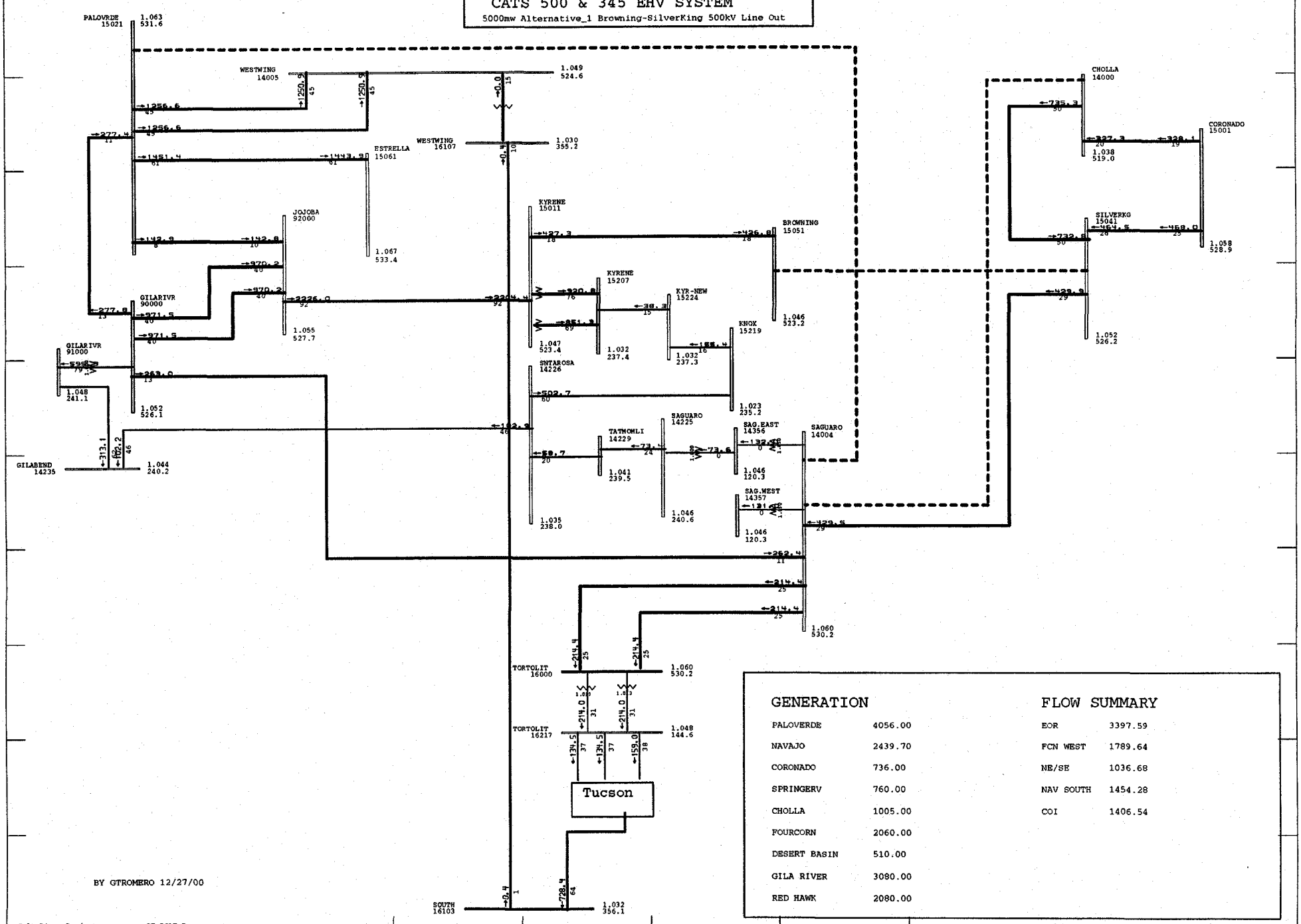

BY GTROMERO 12/27/00

GENERATION

PALOVERDE	4056.00
NAVAJO	2439.70
CORONADO	736.00
SPRINGERV	760.00
CHOLLA	1005.00
FOURCORN	2060.00
DESERT BASIN	510.00
GILA RIVER	3080.00
RED HAWK	2080.00

FLOW SUMMARY

EOR	3397.59
FCN WEST	1789.64
NE/SE	1036.68
NAV SOUTH	1454.28
COI	1406.54

Salt River Project GE-PSLF Program MW/Pct Wed May 09 08:54:00 2001

SRP

CATS CASE REVISION 4 NOVEMBER 3. 2000
CREATED FROM 2002 LS1 WITH 90 PERCENT 2005 HS3 ARIZONA LOADS
AND ANTICIPATED 2005 ARIZONA TOPOLOGY; CATS ALTERNATIVES NOT

PRESENTLY INCLUDED; COMPILED BY K. PECK

p:\users\gtromero\pslf\draw\ca
P:\users\gtromero\pslf\CATS\ca
Rating = 2

CATS 500 & 345 EHV SYSTEM

5000mw Alternative_1 Coronado-SilverKing 500kV Line Out

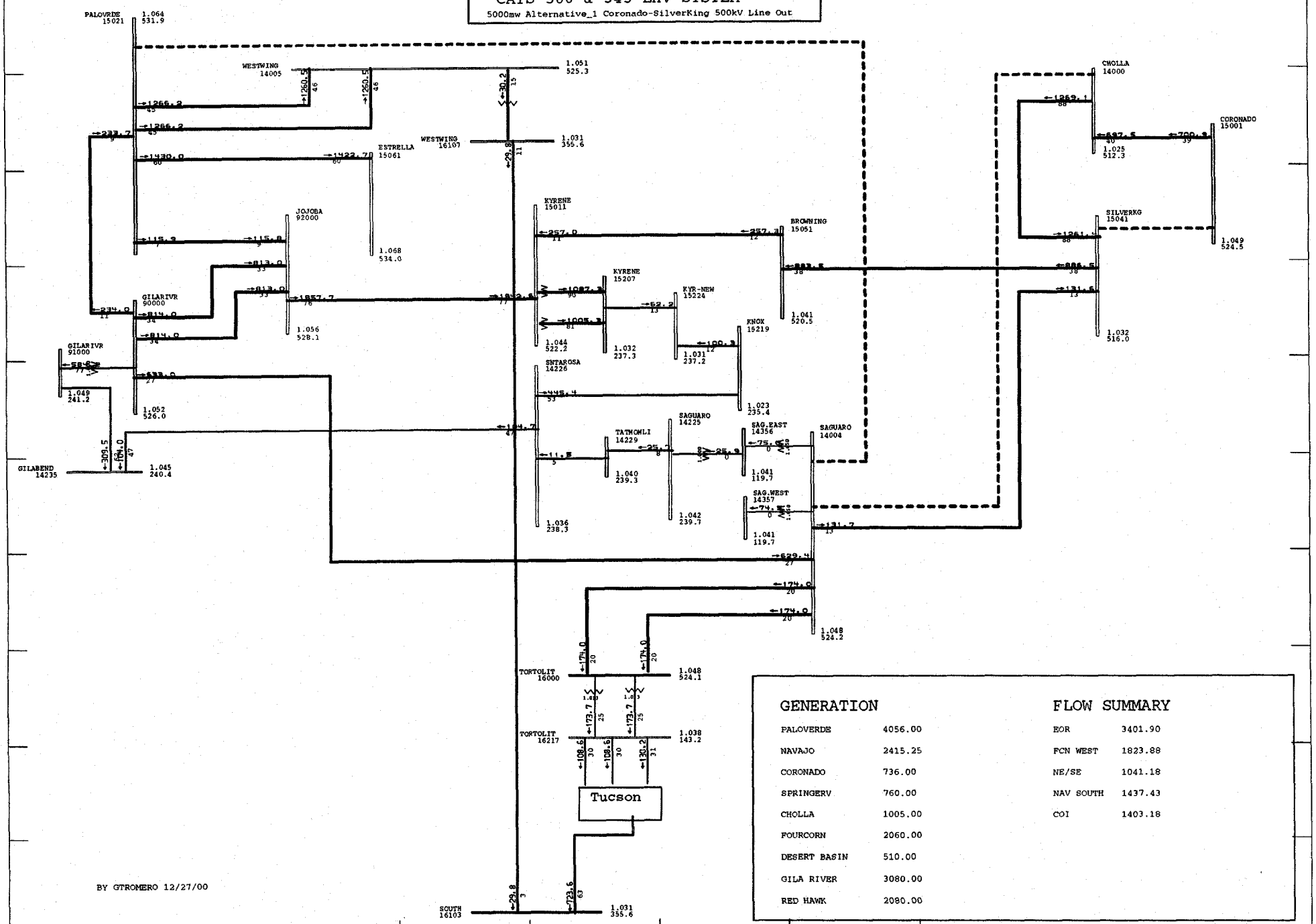

GENERATION

PALOVERDE	4056.00
NAVAJO	2415.25
CORONADO	736.00
SPRINGERV	760.00
CHOLLA	1005.00
FOURCORN	2060.00
DESERT BASIN	510.00
GILA RIVER	3080.00
RED HAWK	2080.00

FLOW SUMMARY

EOR	3401.90
FCN WEST	1823.88
NE/SE	1041.18
NAV SOUTH	1437.43
COI	1403.18

BY GTROMERO 12/27/00

Salt River Project GE-PSLF Program MW/Pct Wed May 09 08:51:08 2001

SRP

CATS CASE REVISION 4 NOVEMBER 3, 2000
CREATED FROM 2002 LS1 WITH 90 PERCENT 2005 HS3 ARIZONA LOADS
AND ANTICIPATED 2005 ARIZONA TOPOLOGY; CATS ALTERNATIVES NOT

PRESENTLY INCLUDED; COMPILED BY K. PECK

p:\users\gtromero\pslf\draw\ca
P:\users\gtromero\pslf\CATS\ca
Rating = 2

CATS 500 & 345 EHV SYSTEM

5000mw Alternative_2 Coronado-SilverKing 500kV Line Out

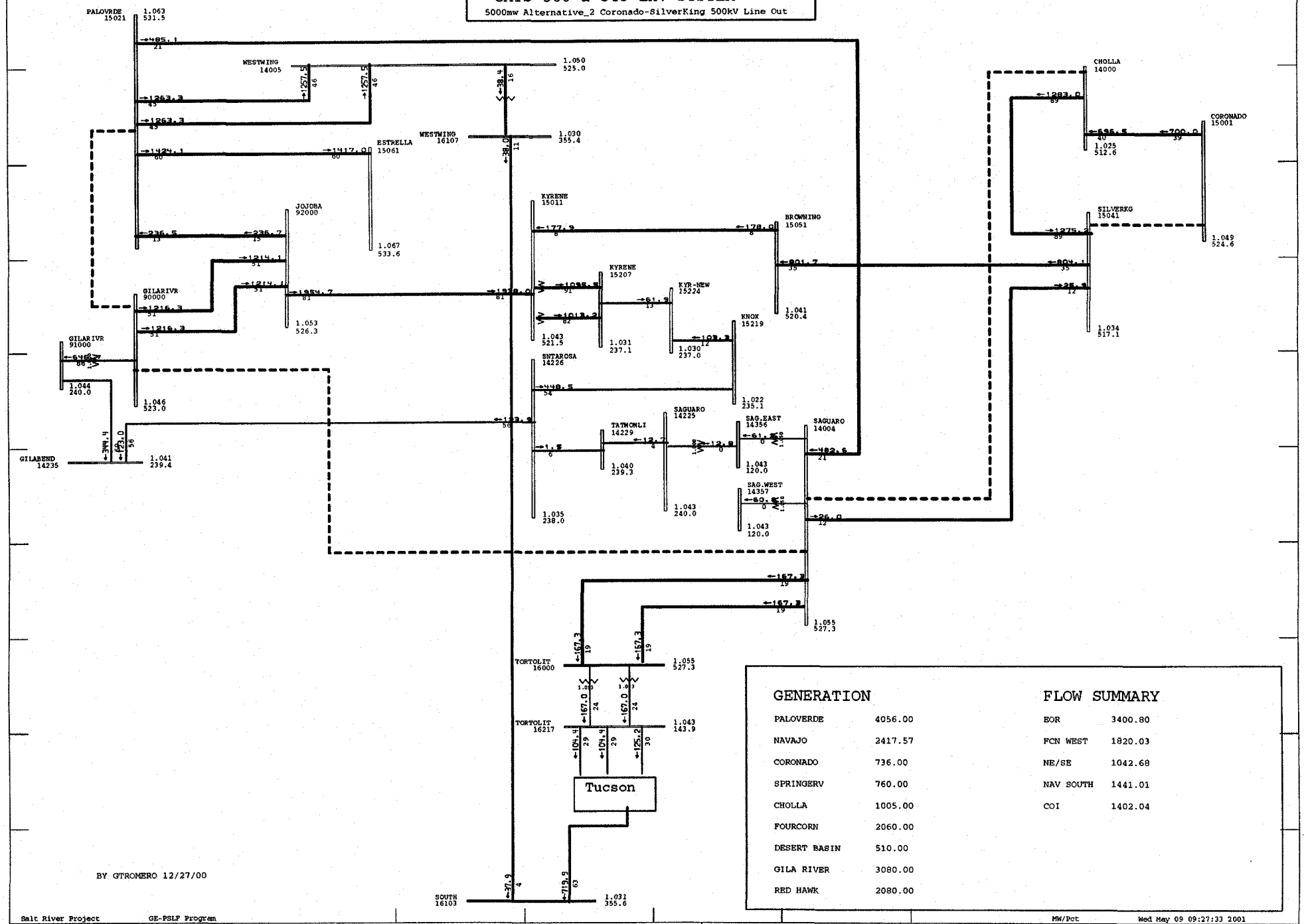

GENERATION	
PALOVERDE	4056.00
NAVAJO	2417.57
CORONADO	736.00
SPRINGERV	760.00
CHOLLA	1005.00
FOURCORN	2060.00
DESERT BASIN	510.00
GILA RIVER	3080.00
RED HAWK	2080.00

FLOW SUMMARY	
EOR	3400.80
FCN WEST	1820.03
NE/SE	1042.68
NAV SOUTH	1441.01
COI	1402.04

BY GTROMERO 12/27/00

Salt River Project GE-PSLF Program MW/Pct Wed May 09 09:27:33 2001

SRP

CATS CASE REVISION 4 NOVEMBER 3, 2000
CREATED FROM 2002 LS1 WITH 90 PERCENT 2005 HS3 ARIZONA LOADS
AND ANTICIPATED 2005 ARIZONA TOPOLOGY; CATS ALTERNATIVES NOT

PRESENTLY INCLUDED; COMPILED BY K. PECK

p:\users\gtromero\pslf\draw\ca
P:\users\gtromero\pslf\CATS\ca
Rating = 2

CATS 500 & 345 EHV SYSTEM

5000mw Alternative_2 Palo Verde-Estrella 500kV Line Out

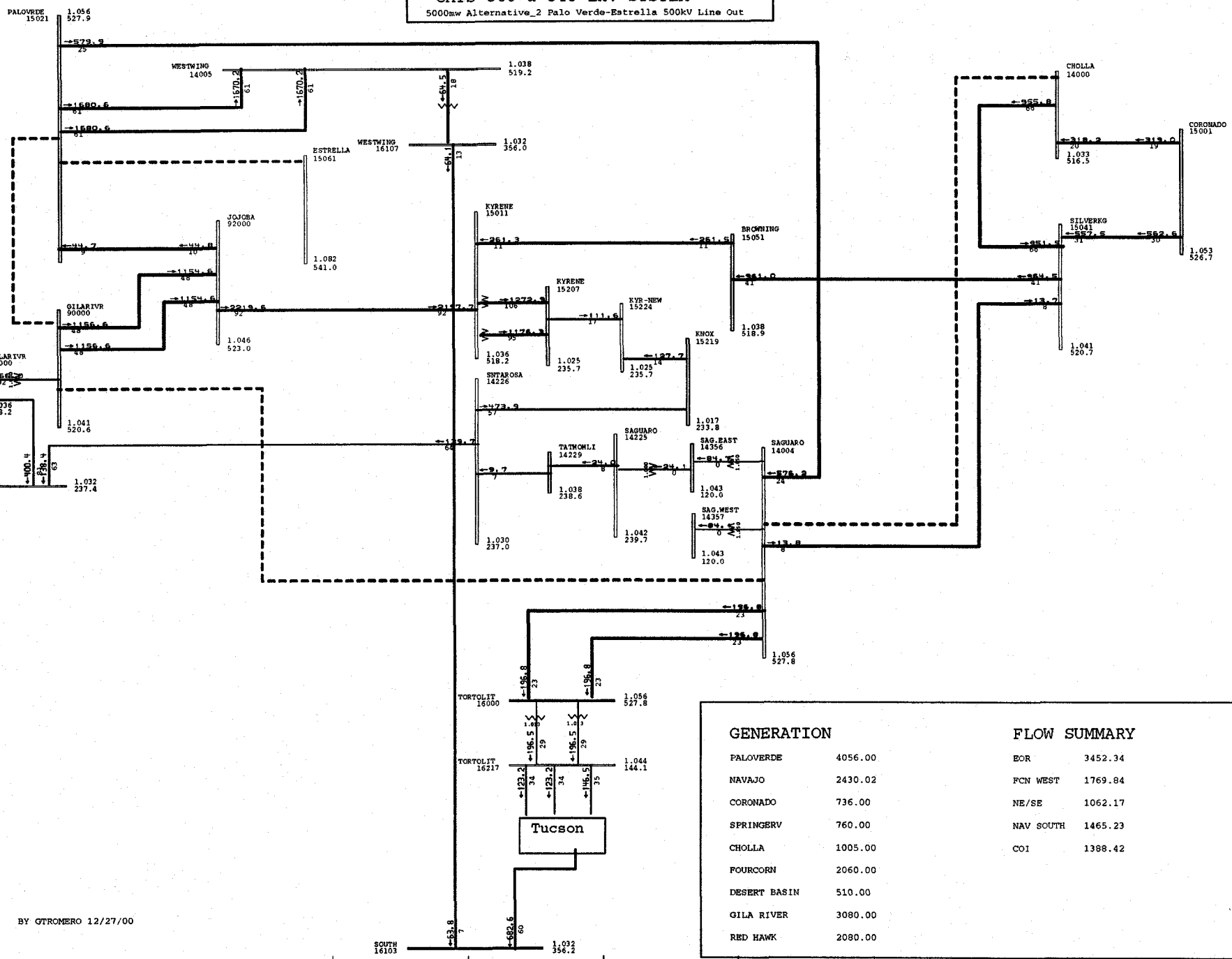

BY GTROMERO 12/27/00

GENERATION

PALOVERDE	4056.00
NAVAJO	2430.02
CORONADO	736.00
SPRINGERV	760.00
CHOLLA	1005.00
FOURCORN	2060.00
DESERT BASIN	510.00
GILA RIVER	3080.00
RED HAWK	2080.00

FLOW SUMMARY

EOR	3452.34
FCN WEST	1769.84
NE/SE	1062.17
NAV SOUTH	1465.23
COI	1388.42

Salt River Project GE-PSLF Program MW/Pct Wed May 09 09:30:31 2001

SRP

CATS CASE REVISION 4 NOVEMBER 3, 2000
CREATED FROM 2002 LS1 WITH 90 PERCENT 2005 HS3 ARIZONA LOADS
AND ANTICIPATED 2005 ARIZONA TOPOLOGY; CATS ALTERNATIVES NOT

PRESENTLY INCLUDED; COMPILED BY K. PECK

p:\users\gtromero\pslf\draw\ca
P:\users\gtromero\pslf\CATS\ca
Rating = 2

CATS 500 & 345 EHV SYSTEM

5000mw Alternative_4 Browning-SilverKing 500kV Line Out

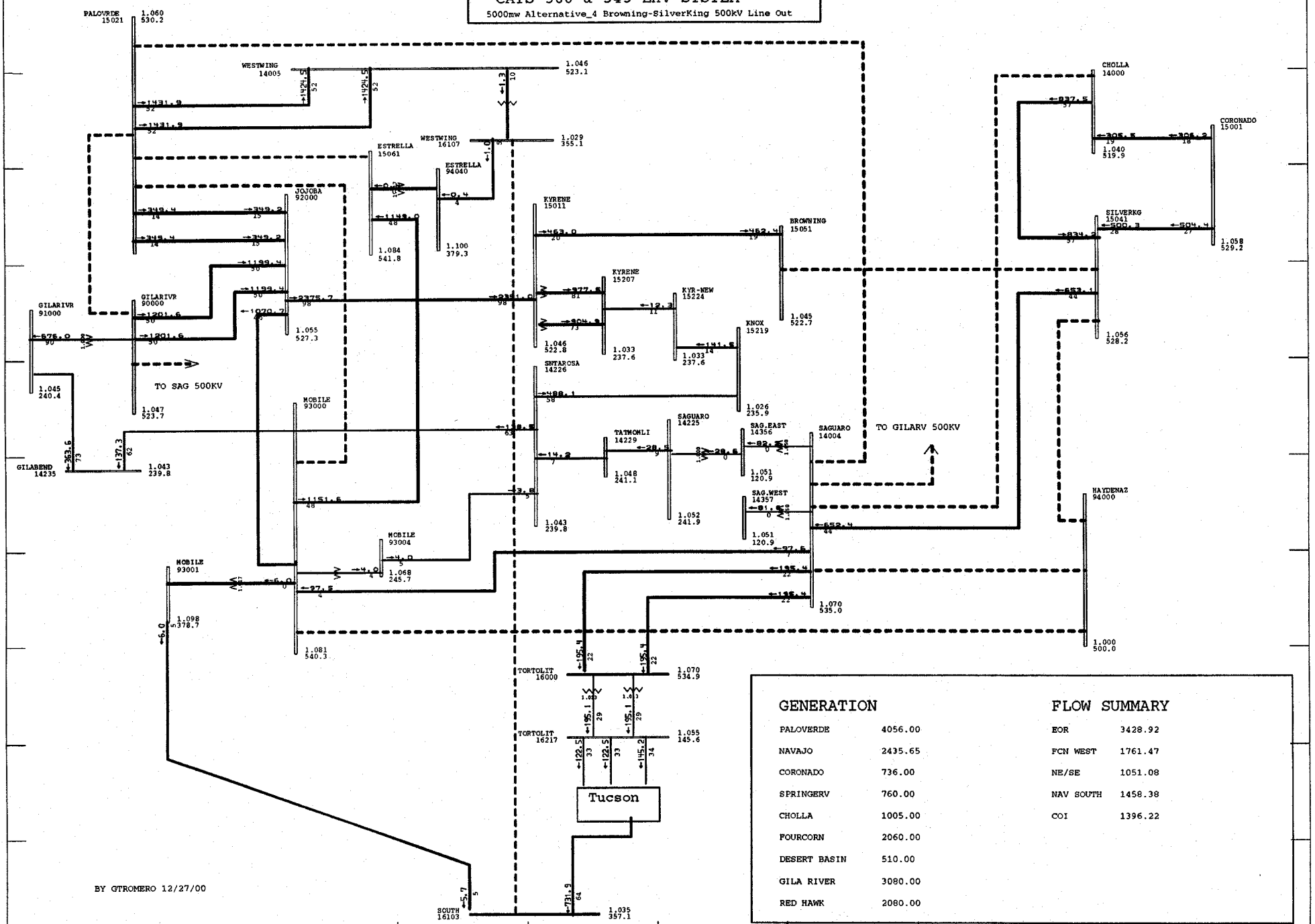

GENERATION

PALOVERDE	4056.00
NAVAJO	2435.65
CORONADO	736.00
SPRINGERV	760.00
CHOLLA	1005.00
FOURCORN	2060.00
DESERT BASIN	510.00
GILA RIVER	3080.00
RED HAWK	2080.00

FLOW SUMMARY

EOR	3428.92
FCN WEST	1761.47
NE/SE	1051.08
NAV SOUTH	1458.38
COI	1396.22

Salt River Project GE-PSLF Program MW/Pct Wed May 09 10:30:36 2001

SRP

CATS CASE REVISION 4 NOVEMBER 3, 2000
CREATED FROM 2002 LS1 WITH 90 PERCENT 2005 HS3 ARIZONA LOADS
AND ANTICIPATED 2005 ARIZONA TOPOLOGY; CATS ALTERNATIVES NOT

PRESENTLY INCLUDED; COMPILED BY K. PECK

p:\users\gtromero\pslf\draw\ca
P:\users\gtromero\pslf\CATS\ca
Rating = 2

CATS 500 & 345 EHV SYSTEM

5000mw Alternative_5 Coronado-SilverKing 500kV Line Out

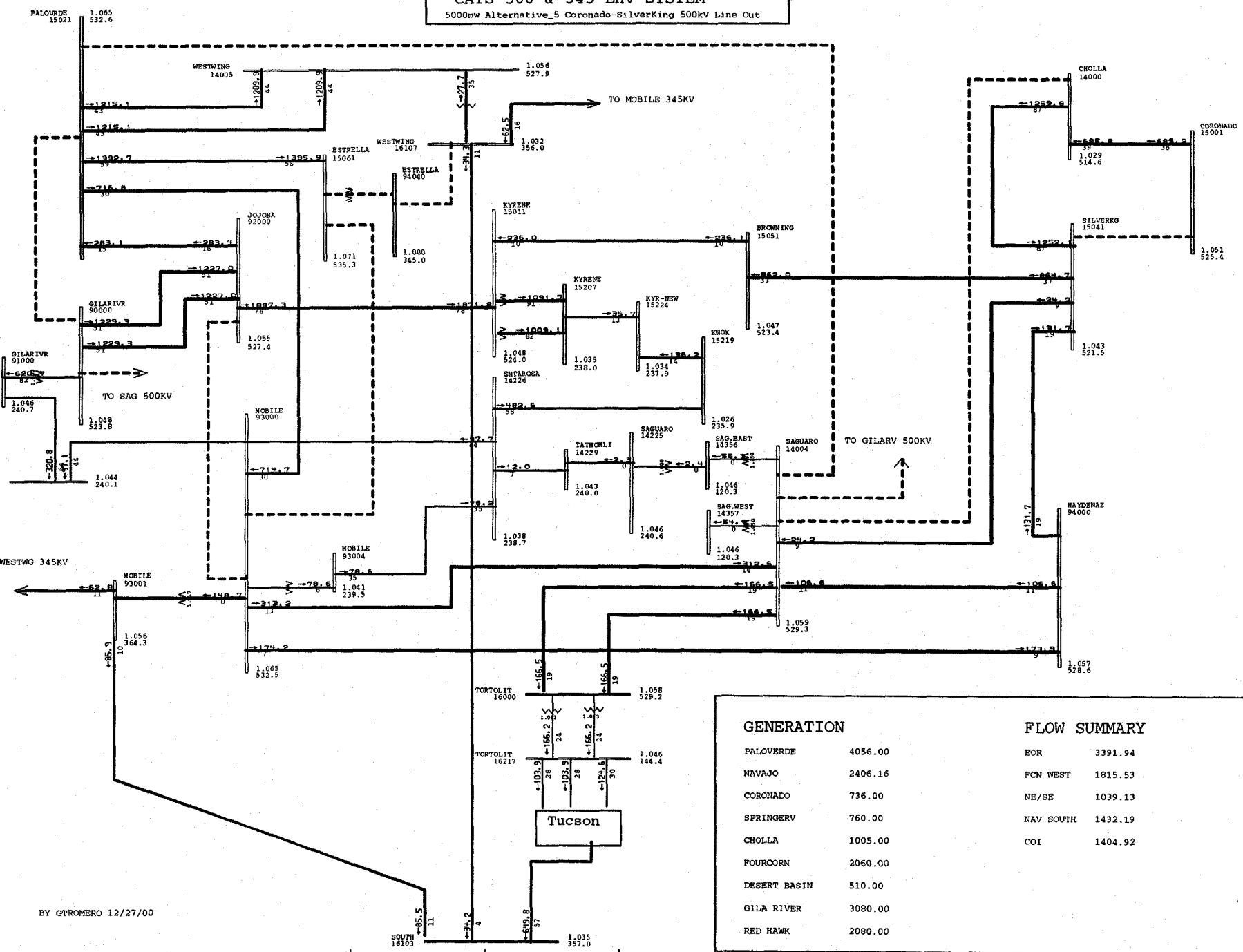

GENERATION

PALOVERDE	4056.00
NAVAJO	2406.16
CORONADO	736.00
SPRINGERV	760.00
CHOLLA	1005.00
FOURCORN	2060.00
DESERT BASIN	510.00
GILA RIVER	3080.00
RED HAWK	2080.00

FLOW SUMMARY

EOR	3391.94
FCN WEST	1815.53
NE/SE	1039.13
NAV SOUTH	1432.19
COI	1404.92

Salt River Project GE-PSLF Program MW/Pct Wed May 09 10:50:49 2001

SRP

CATS CASE REVISION 4 NOVEMBER 3, 2000
CREATED FROM 2002 LS1 WITH 90 PERCENT 2005 HS3 ARIZONA LOADS
AND ANTICIPATED 2005 ARIZONA TOPOLOGY; CATS ALTERNATIVES NOT

PRESENTLY INCLUDED; COMPILED BY K. PECK

p:\users\gtromero\pslf\draw\ca
P:\users\gtromero\pslf\CATS\ca
Rating = 2

CATS 500 & 345 EHV SYSTEM

5000mw Alternative_4 Coronado-SilverKing 500kV Line Out

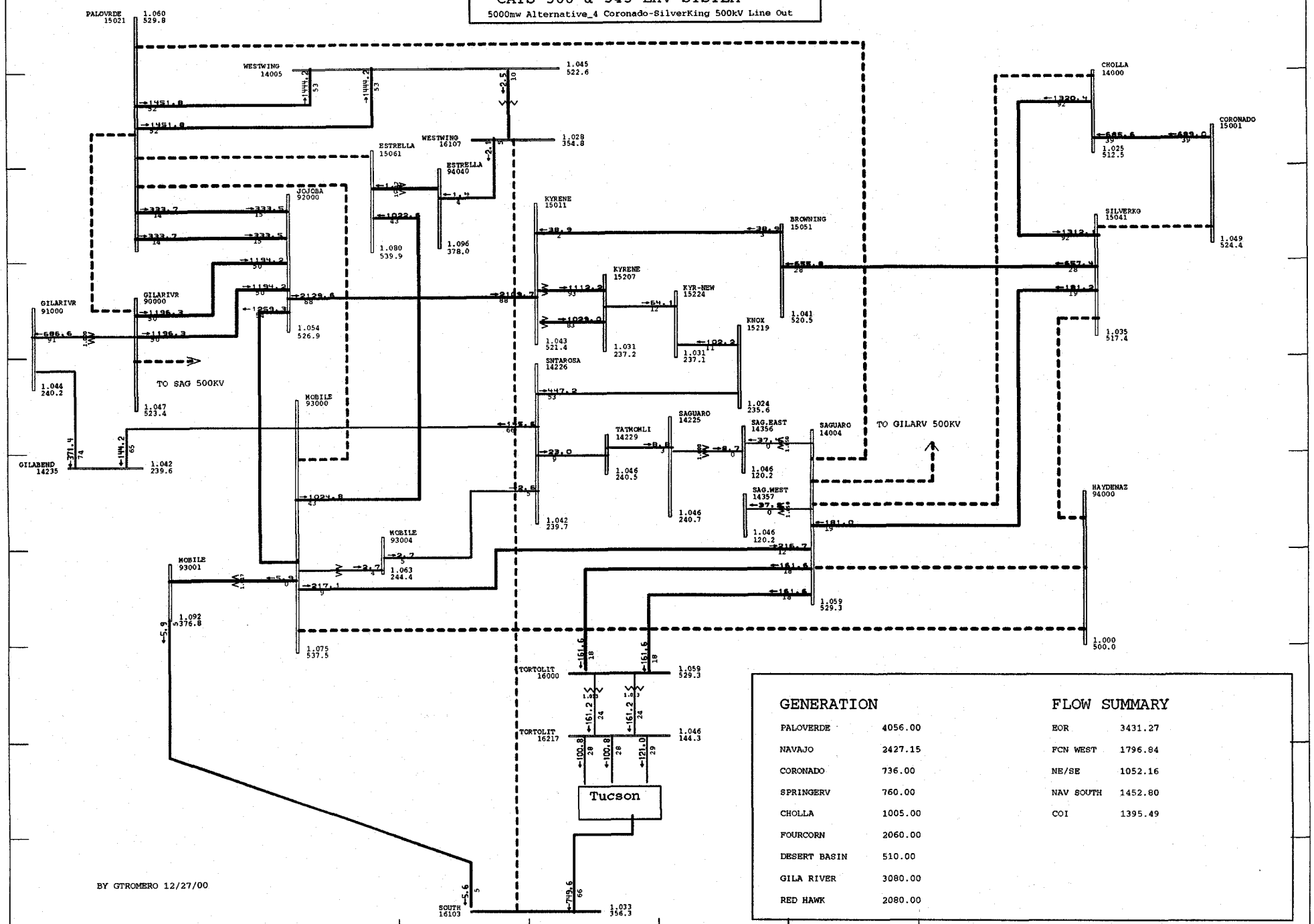

GENERATION

PALOVERDE	4056.00
NAVAJO	2427.15
CORONADO	736.00
SPRINGERV	760.00
CHOLLA	1005.00
FOURCORN	2060.00
DESERT BASIN	510.00
GILA RIVER	3080.00
RED HAWK	2080.00

FLOW SUMMARY

EOR	3431.27
FCN WEST	1796.84
NE/SE	1052.16
NAV SOUTH	1452.80
COI	1395.49

BY GTROMERO 12/27/00

Salt River Project GE-PSLF Program MW/Pct Wed May 09 10:28:51 2001

SRP

CATS CASE REVISION 4 NOVEMBER 3, 2000
CREATED FROM 2002 LS1 WITH 90 PERCENT 2005 HS3 ARIZONA LOADS
AND ANTICIPATED 2005 ARIZONA TOPOLOGY; CATS ALTERNATIVES NOT

PRESENTLY INCLUDED; COMPILED BY K. PECK

p:\users\gtromero\pslf\draw\ca
P:\users\gtromero\pslf\CATS\ca
Rating = 2

CATS 500 & 345 EHV SYSTEM

5000mw Alternative_5 Browning-SilverKing Line Out

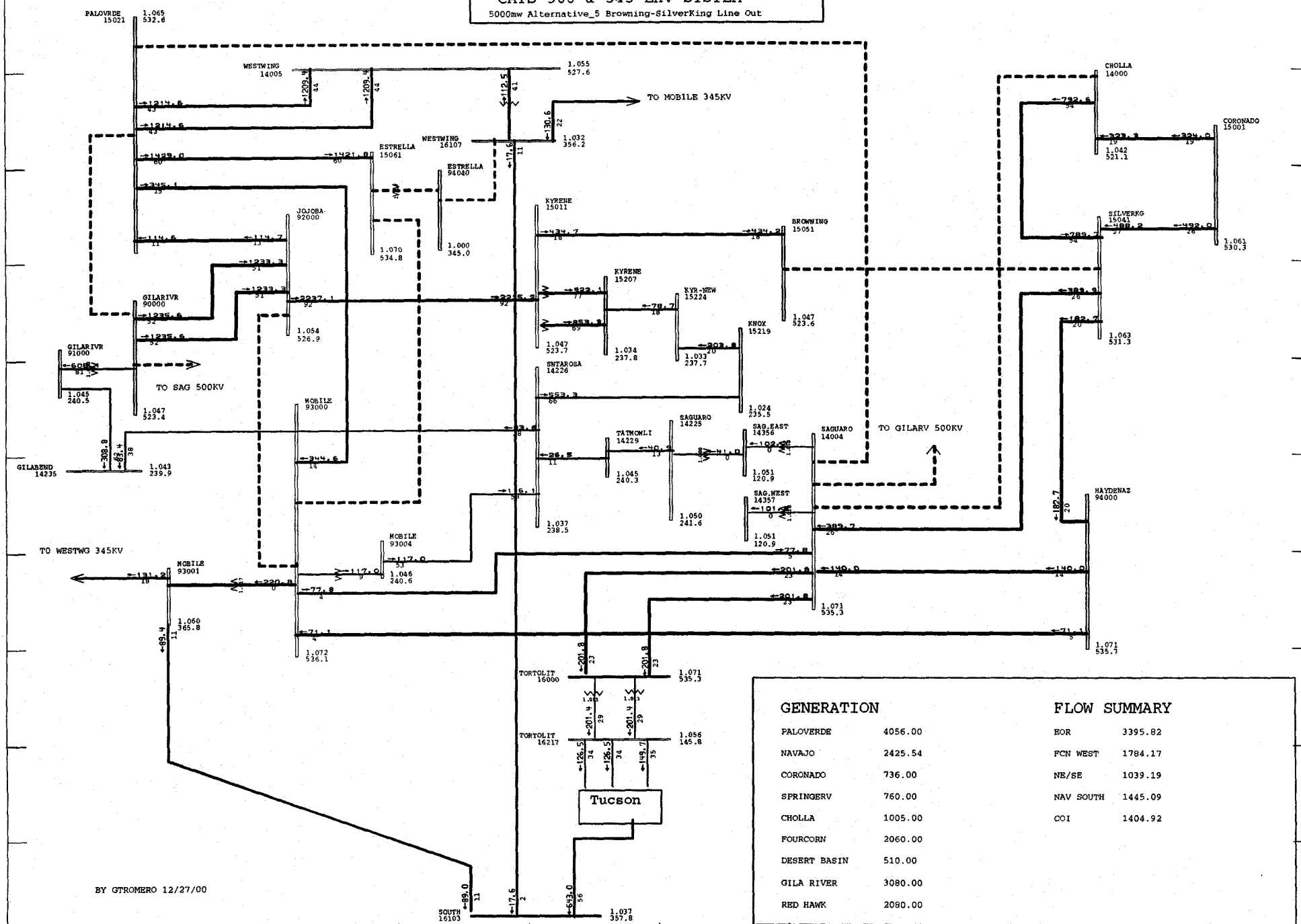

GENERATION

PALOVERDE	4056.00
NAVAJO	2425.54
CORONADO	736.00
SPRINGERV	760.00
CHOLLA	1005.00
FOURCORN	2060.00
DESERT BASIN	510.00
GILA RIVER	3080.00
RED HAWK	2080.00

FLOW SUMMARY

EOR	3395.82
FCN WEST	1784.17
NE/SE	1039.19
NAV SOUTH	1445.09
COI	1404.92

Salt River Project GE-PSLF Program MW/Pct Mon May 07 08:39:55 2001

SRP

CATS CASE REVISION 4 NOVEMBER 3, 2000
CREATED FROM 2002 LS1 WITH 90 PERCENT 2005 HS3 ARIZONA LOADS
AND ANTICIPATED 2005 ARIZONA TOPOLOGY; CATS ALTERNATIVES NOT

PRESENTLY INCLUDED; COMPILED BY K. PECK

p:\users\gtromero\pslf\draw\ca
P:\users\gtromero\pslf\CATS\ca
Rating = 2

CATS 500 & 345 EHV SYSTEM

5500mw Alternative_2 Coronado-SilverKing 500kV Line Out

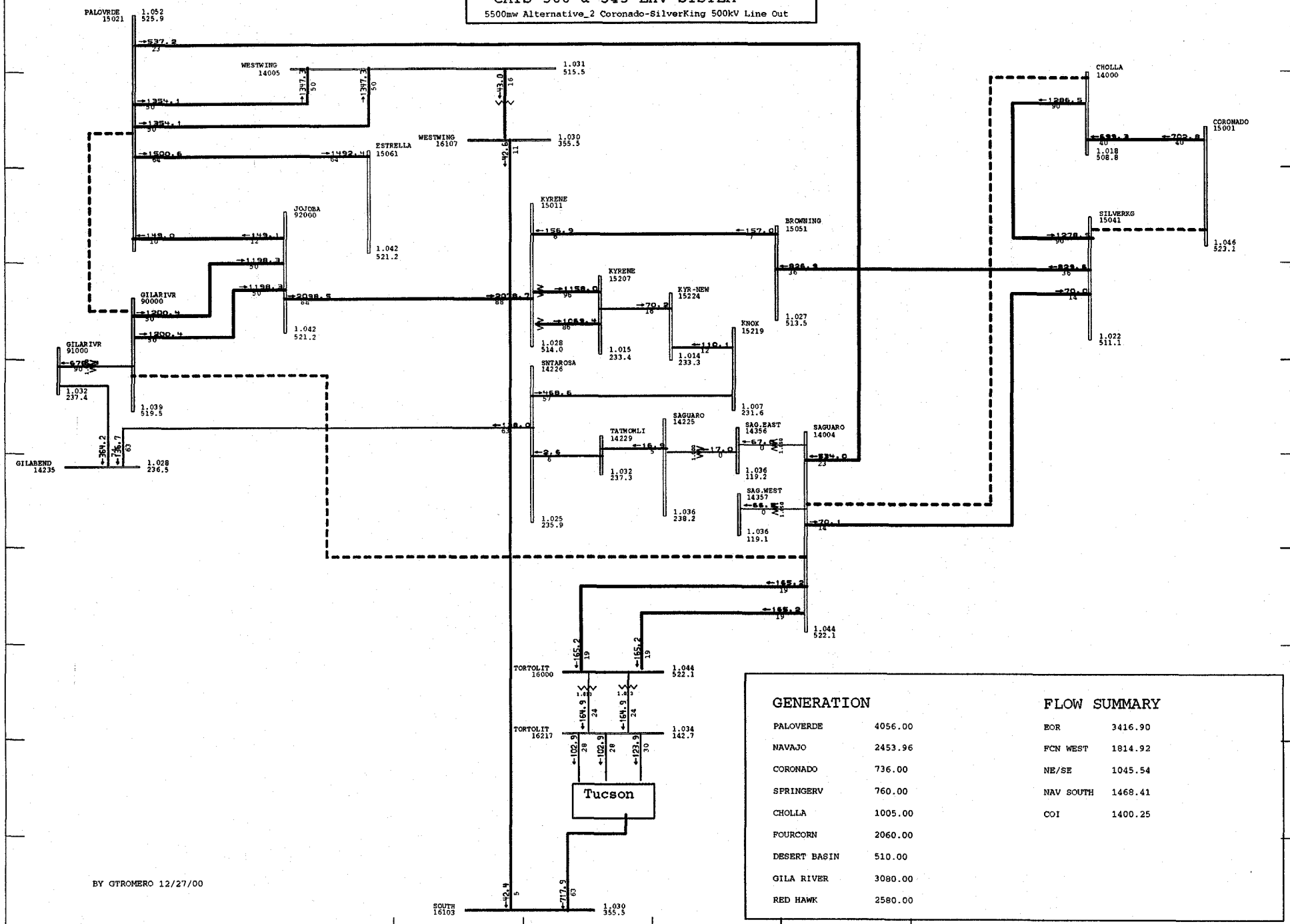

BY GTROMERO 12/27/00

GENERATION

PALOVERDE	4056.00
NAVAJO	2453.96
CORONADO	736.00
SPRINGERV	760.00
CHOLLA	1005.00
FOURCORN	2060.00
DESERT BASIN	510.00
GILA RIVER	3080.00
RED HAWK	2580.00

FLOW SUMMARY

EOR	3416.90
FCN WEST	1814.92
NE/SE	1045.54
NAV SOUTH	1468.41
COI	1400.25

Salt River Project GE-PSLF Program MW/Pct Wed May 09 10:06:41 2001

SRP

CATS CASE REVISION 4 NOVEMBER 3, 2000
CREATED FROM 2002 LS1 WITH 90 PERCENT 2005 NS3 ARIZONA LOADS
AND ANTICIPATED 2005 ARIZONA TOPOLOGY; CATS ALTERNATIVES NOT

PRESENTLY INCLUDED; COMPILED BY K. PECK

p:\users\gtromero\pslf\draw\ca
P:\users\gtromero\pslf\CATS\ca
Rating = 2

CATS 500 & 345 EHV SYSTEM

5500mw Alternative_2 Palo Verde-Estrella 500kV Line Out

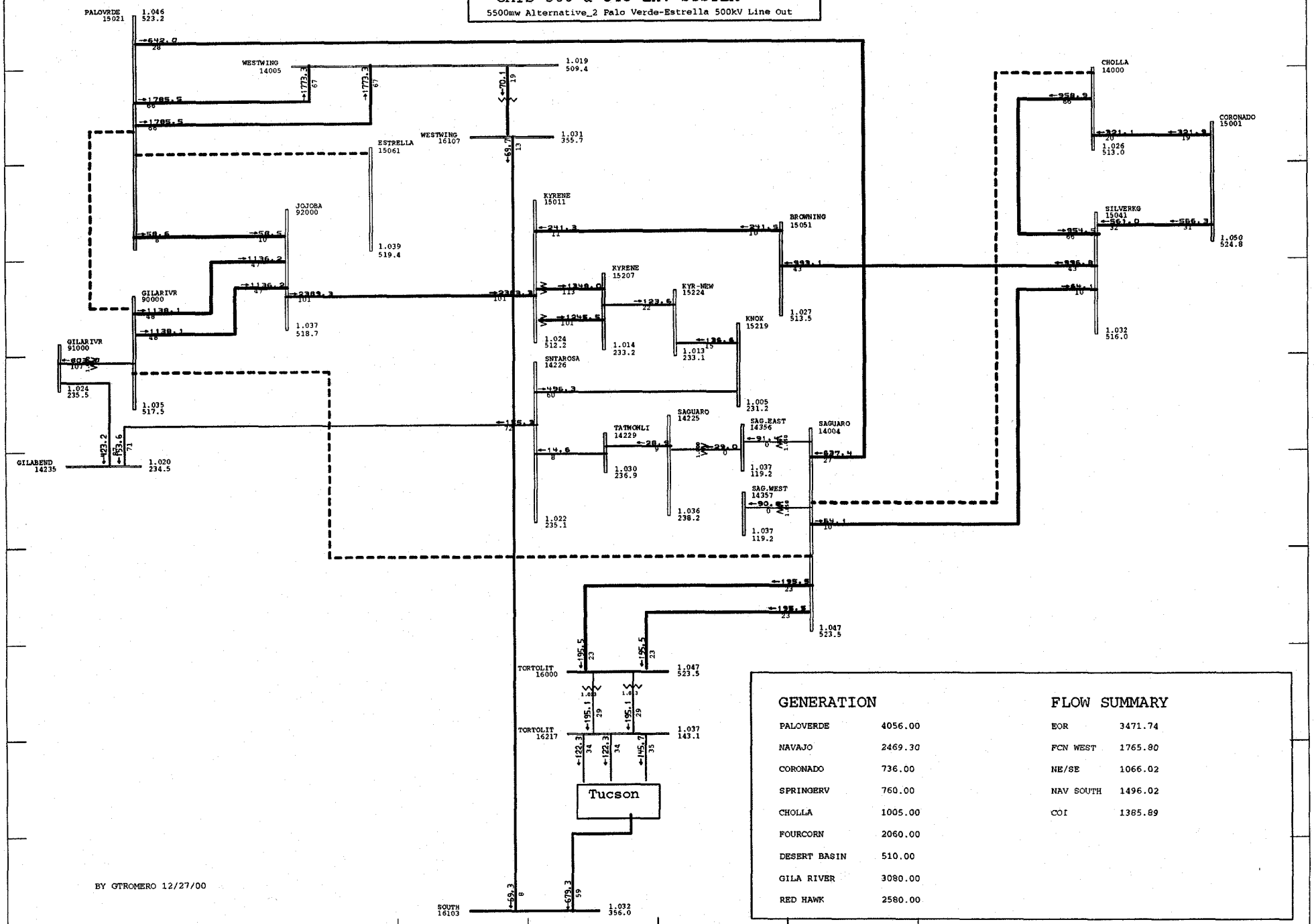

BY GTROMERO 12/27/00

GENERATION

PALOVERDE	4056.00
NAVAJO	2469.30
CORONADO	736.00
SPRINGERV	760.00
CHOLLA	1005.00
FOURCORN	2060.00
DESERT BASIN	510.00
GILA RIVER	3080.00
RED HAWK	2580.00

FLOW SUMMARY

EOR	3471.74
FCN WEST	1765.80
NE/SE	1066.02
NAV SOUTH	1496.02
COI	1385.89

Salt River Project GE-PSLF Program MW/Pct Wed May 09 10:10:05 2001

SRP

CATS CASE REVISION 4 NOVEMBER 3, 2000
CREATED FROM 2002 LS1 WITH 90 PERCENT 2005 HS3 ARIZONA LOADS
AND ANTICIPATED 2005 ARIZONA TOPOLOGY; CATS ALTERNATIVES NOT

PRESENTLY INCLUDED; COMPILED BY K. PECK

p:\users\gtromero\pslf\draw\ca
P:\users\gtromero\pslf\CATS\ca
Rating = 2

CATS 500 & 345 EHV SYSTEM

5500mw Alternative_4 Browning-SilverKing 500kV Line Out

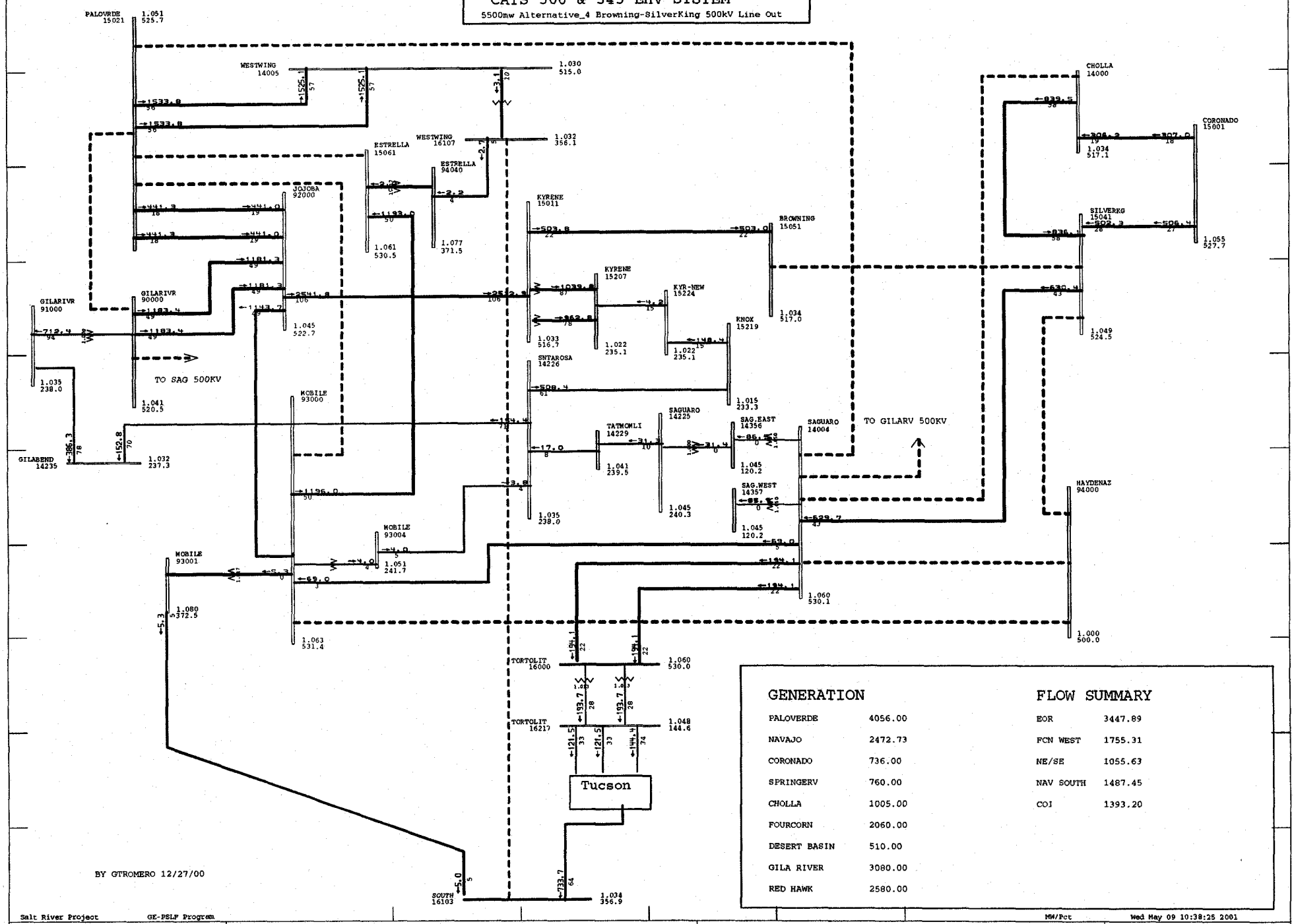

GENERATION

PALOVERDE	4056.00
NAVAJO	2472.73
CORONADO	736.00
SPRINGERV	760.00
CHOLLA	1005.00
FOURCORN	2060.00
DESERT BASIN	510.00
GILA RIVER	3080.00
RED HAWK	2580.00

FLOW SUMMARY

EOR	3447.89
FCN WEST	1755.31
NE/SE	1055.63
NAV SOUTH	1487.45
COI	1393.20

Salt River Project GE-PSLF Program MW/Pct Wed May 09 10:38:25 2001

SRP

CATS CASE REVISION 4 NOVEMBER 3, 2000
CREATED FROM 2002 LS1 WITH 90 PERCENT 2005 HS3 ARIZONA LOADS
AND ANTICIPATED 2005 ARIZONA TOPOLOGY; CATS ALTERNATIVES NOT

PRESENTLY INCLUDED; COMPILED BY K. PECK

p:\users\gtromero\pslf\draw\ca
P:\users\gtromero\pslf\CATS\ca
Rating = 2

CATS 500 & 345 EHV SYSTEM

5000mw Alternative_5 Palo Verde-Estrella 500kV Line Out

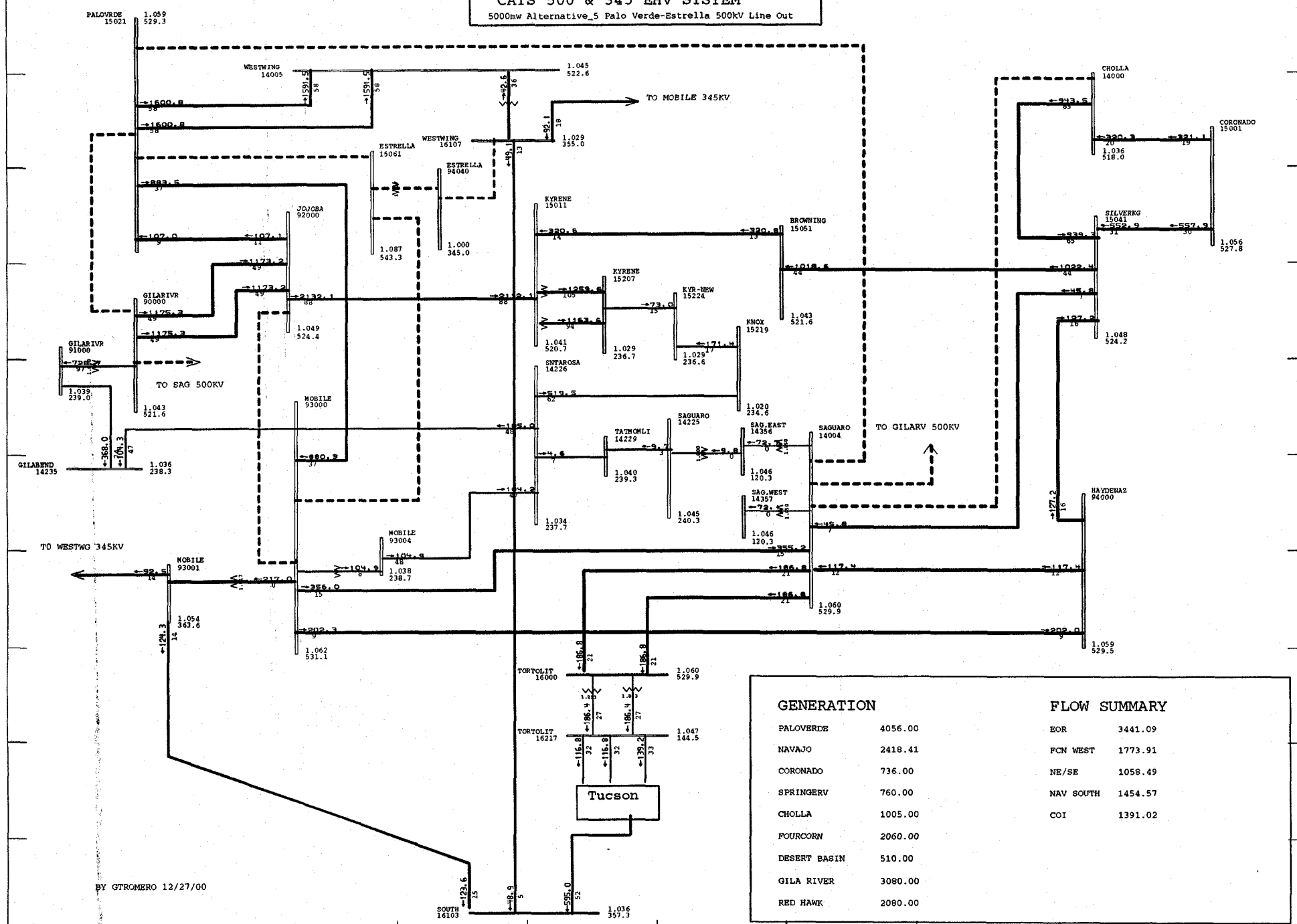

GENERATION

PALOVERDE	4056.00
NAVAJO	2418.41
CORONADO	736.00
SPRINGERV	760.00
CHOLLA	1005.00
FOURCORN	2060.00
DESERT BASIN	510.00
GILA RIVER	3080.00
RED HAWK	2080.00

FLOW SUMMARY

EOR	3441.09
FCN WEST	1773.91
NE/SE	1058.49
NAV SOUTH	1454.57
COI	1391.02

Salt River Project GE-PSLF Program MW/Pct Mon May 07 08:38:01 2001

SRP

CATS CASE REVISION 4 NOVEMBER 3, 2000
CREATED FROM 2002 LS1 WITH 90 PERCENT 2005 HS3 ARIZONA LOADS
AND ANTICIPATED 2005 ARIZONA TOPOLOGY; CATS ALTERNATIVES NOT

PRESENTLY INCLUDED; COMPILED BY K. PECK

p:\users\gtromero\pslf\draw\ca
P:\users\gtromero\pslf\CATS\ca
Rating = 2

CATS 500 & 345 EHV SYSTEM

5500mw Alternative_1 Browning-Silver King 500kV Line Out

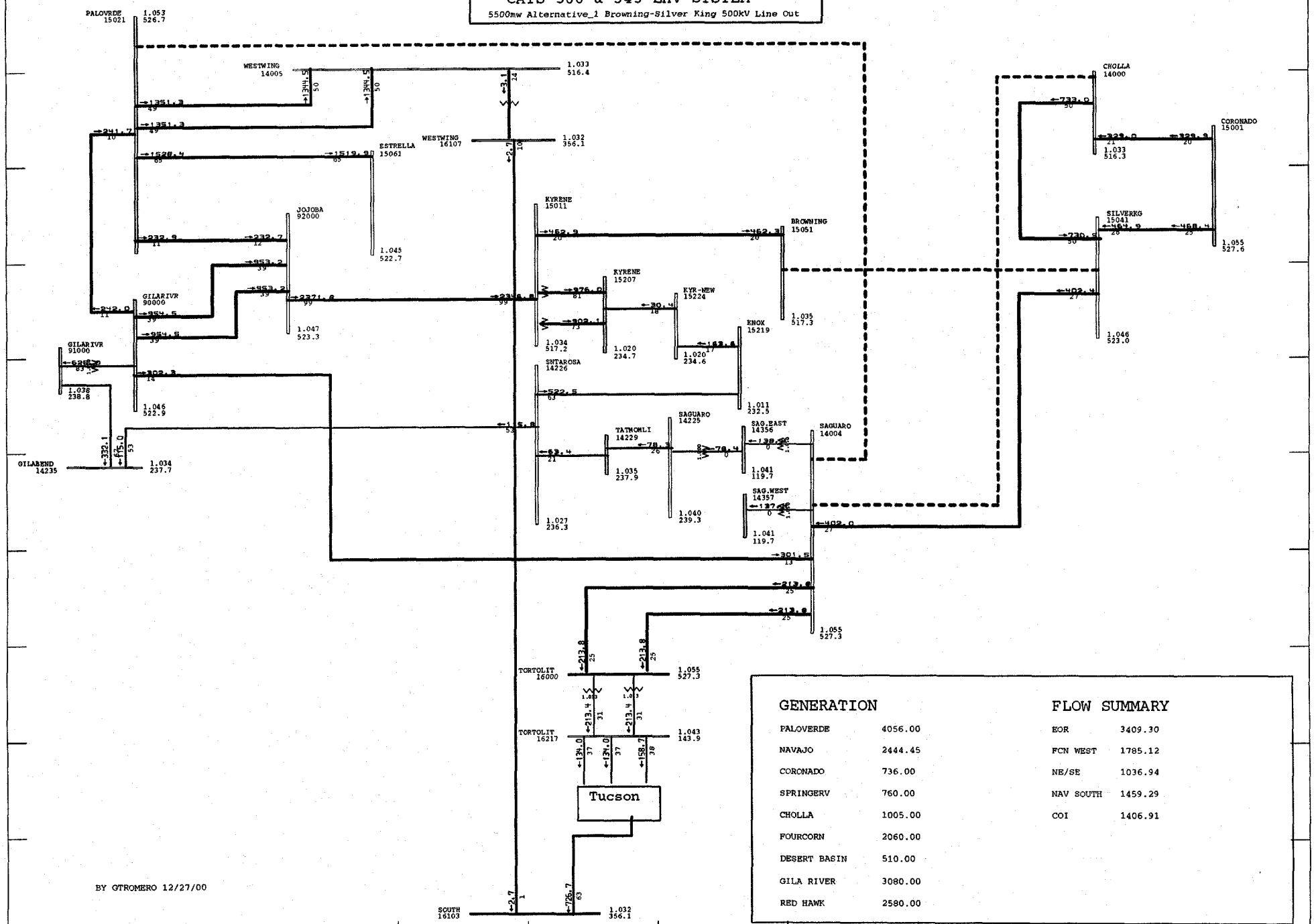

GENERATION

PALOVERDE	4056.00
NAVAJO	2444.45
CORONADO	736.00
SPRINGERV	760.00
CHOLLA	1005.00
FOURCORN	2060.00
DESERT BASIN	510.00
GILA RIVER	3080.00
RED HAWK	2580.00

FLOW SUMMARY

EOR	3409.30
FCN WEST	1785.12
NE/SE	1036.94
NAV SOUTH	1459.29
COI	1406.91

BY GTROMERO 12/27/00

Salt River Project GE-PSLF Program MW/Pct Tue Apr 24 09:30:16 2001

SRP

CATS CASE REVISION 4 NOVEMBER 3, 2000
CREATED FROM 2002 LS1 WITH 90 PERCENT 2005 HS3 ARIZONA LOADS
AND ANTICIPATED 2005 ARIZONA TOPOLOGY; CATS ALTERNATIVES NOT

PRESENTLY INCLUDED; COMPILED BY K. PECK

p:\users\gtromero\pslf\draw\ca
P:\users\gtromero\pslf\CATS\ca
Rating = 2

CATS 500 & 345 EHV SYSTEM

5500mw Alternative_1 Coronado-SilverKing 500kV Line Out

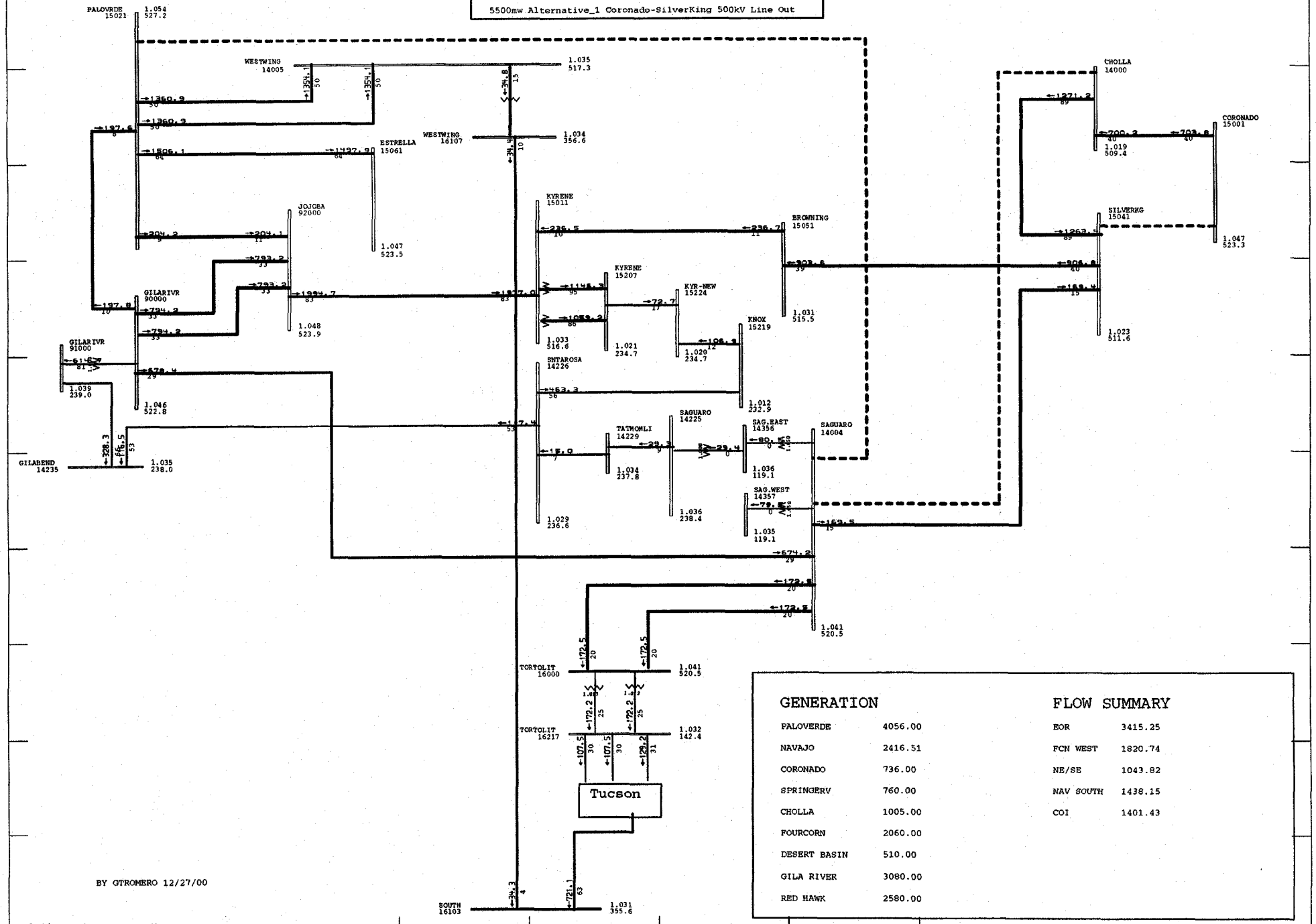

GENERATION

PALOVERDE	4056.00
NAVAJO	2416.51
CORONADO	736.00
SPRINGERV	760.00
CHOLLA	1005.00
FOURCORN	2060.00
DESERT BASIN	510.00
GILA RIVER	3080.00
RED HAWK	2580.00

FLOW SUMMARY

EOR	3415.25
FCN WEST	1820.74
NE/SE	1043.82
NAV SOUTH	1438.15
COI	1401.43

Salt River Project GE-PSLF Program MW/Pct Wed May 09 09:08:16 2001

SRP

CATS CASE REVISION 4 NOVEMBER 3, 2000
CREATED FROM 2002 LS1 WITH 90 PERCENT 2005 HS3 ARIZONA LOADS
AND ANTICIPATED 2005 ARIZONA TOPOLOGY; CATS ALTERNATIVES NOT

PRESENTLY INCLUDED; COMPILED BY K. PECK

p:\users\gtromero\pslf\draw\ca
P:\users\gtromero\pslf\CATS\ca
Rating = 2

CATS 500 & 345 EHV SYSTEM

5500mw Alternative_1 Palo Verde-Estrella 500kV Line Out

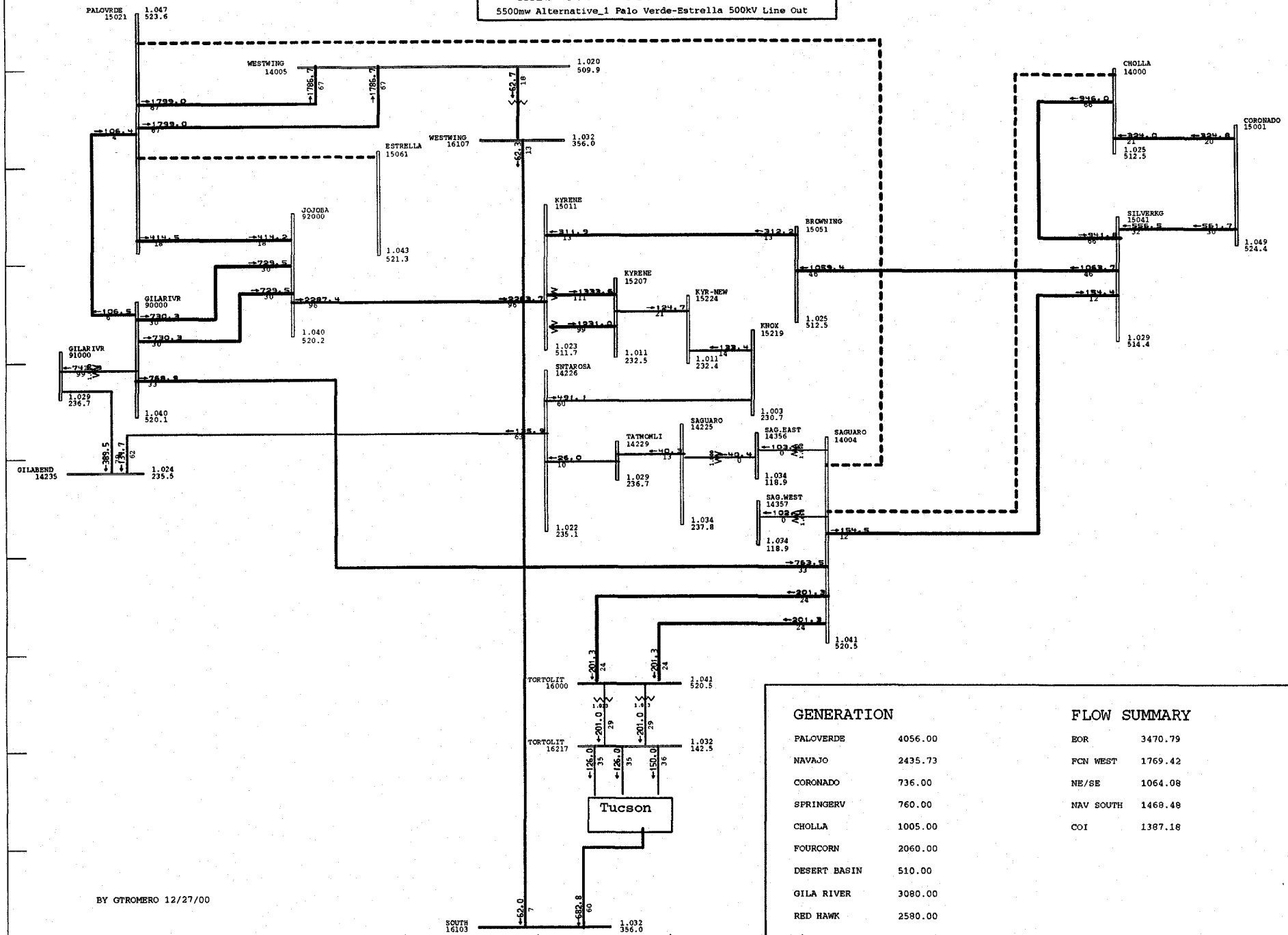

GENERATION

PALOVERDE	4056.00
NAVAJO	2435.73
CORONADO	736.00
SPRINGERV	760.00
CHOLLA	1005.00
FOURCORN	2060.00
DESERT BASIN	510.00
GILA RIVER	3080.00
RED HAWK	2580.00

FLOW SUMMARY

EOR	3470.79
FCN WEST	1769.42
NE/SE	1064.08
NAV SOUTH	1468.48
COI	1387.18

BY GTROMERO 12/27/00

Salt River Project GE-PSLF Program MW/Pct Tue Apr 24 09:28:23 2001

SRP

CATS CASE REVISION 4 NOVEMBER 3, 2000
CREATED FROM 2002 LS1 WITH 90 PERCENT 2005 HS3 ARIZONA LOADS
AND ANTICIPATED 2005 ARIZONA TOPOLOGY; CATS ALTERNATIVES NOT

PRESENTLY INCLUDED; COMPILED BY K. PECK

p:\users\gtromero\psLf\draw\ca
P:\users\gtromero\psLf\CATS\ca
Rating = 2

CATS 500 & 345 EHV SYSTEM

5500mw Alternative_2 Browning-SilverKing 500kV Line Out

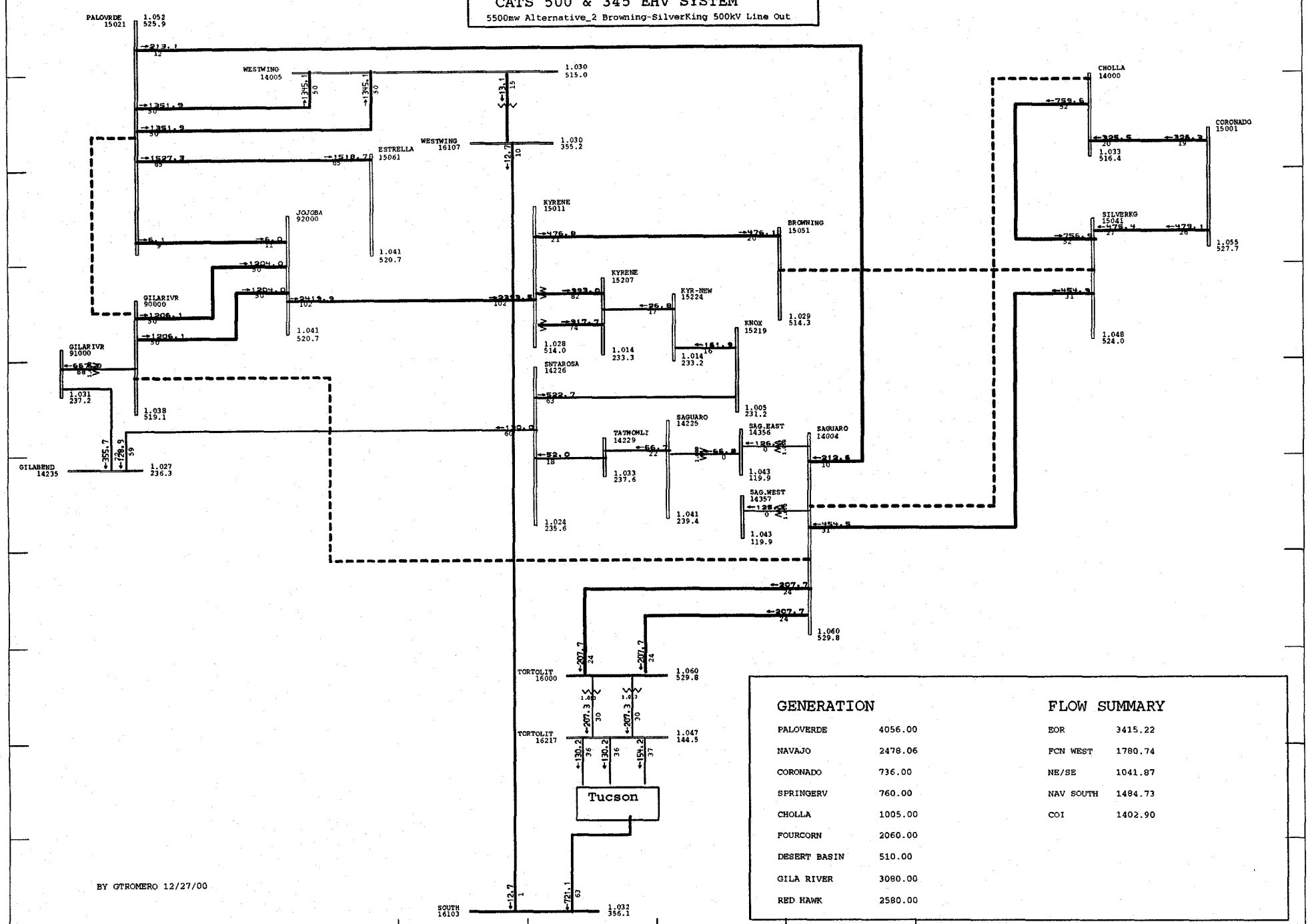

GENERATION

PALOVERDE	4056.00
NAVAJO	2478.06
CORONADO	736.00
SPRINGERV	760.00
CHOLLA	1005.00
FOURCORN	2060.00
DESERT BASIN	510.00
GILA RIVER	3080.00
RED HAWK	2580.00

FLOW SUMMARY

EOR	3415.22
FCN WEST	1780.74
NE/SE	1041.87
NAV SOUTH	1484.73
COI	1402.90

BY GTROMERO 12/27/00

Salt River Project GE-PSLF Program MW/Pct Wed May 09 10:08:10 2001

SRP

CATS CASE REVISION 4 NOVEMBER 3, 2000
CREATED FROM 2002 LS1 WITH 90 PERCENT 2005 HS3 ARIZONA LOADS
AND ANTICIPATED 2005 ARIZONA TOPOLOGY; CATS ALTERNATIVES NOT

PRESENTLY INCLUDED; COMPILED BY K. PECK

P:\users\gtromero\pslf\draw\ca
P:\users\gtromero\pslf\CATS\ca
Rating = 2

CATS 500 & 345 EHV SYSTEM

5500mw Alternative_4 Coronado-SilverKing 500kV Line Out

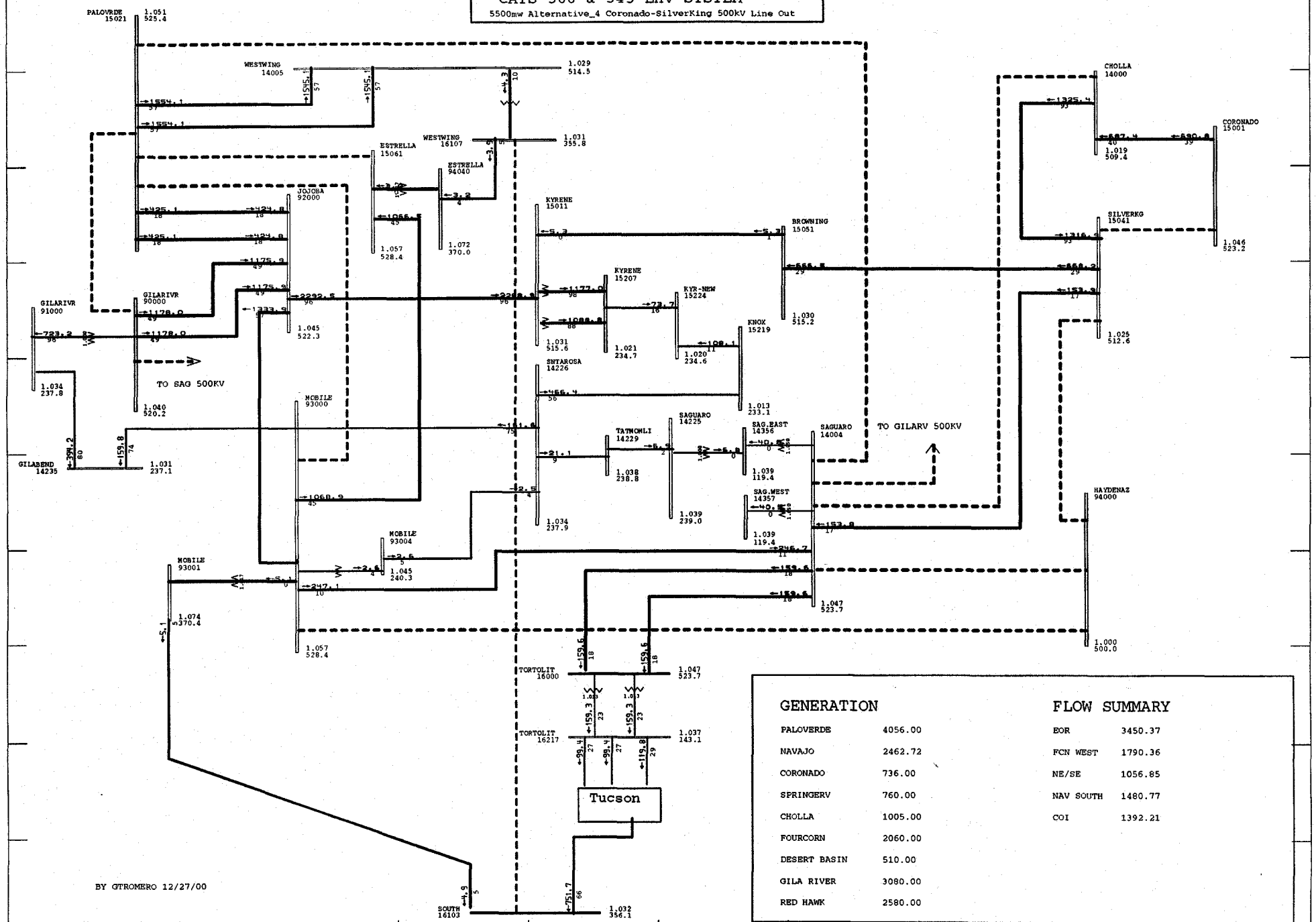

GENERATION

PALOVERDE	4056.00
NAVAJO	2462.72
CORONADO	736.00
SPRINGERV	760.00
CHOLLA	1005.00
FOURCORN	2060.00
DESERT BASIN	510.00
GILA RIVER	3080.00
RED HAWK	2580.00

FLOW SUMMARY

EOR	3450.37
FCN WEST	1790.36
NE/SE	1056.85
NAV SOUTH	1480.77
COI	1392.21

Salt River Project GE-PSLF Program MW/Pct Wed May 09 10:36:45 2001

SRP

CATS CASE REVISION 4 NOVEMBER 3, 2000
CREATED FROM 2002 LS1 WITH 90 PERCENT 2005 HS3 ARIZONA LOADS
AND ANTICIPATED 2005 ARIZONA TOPOLOGY; CATS ALTERNATIVES NOT

PRESENTLY INCLUDED; COMPILED BY K. PECK

p:\users\gtromero\pslf\draw\ca
P:\users\gtromero\pslf\CATS\ca
Rating = 2

CATS 500 & 345 EHV SYSTEM

5500mw Alternative_5 Browning-SilverKing 500kV Line Out

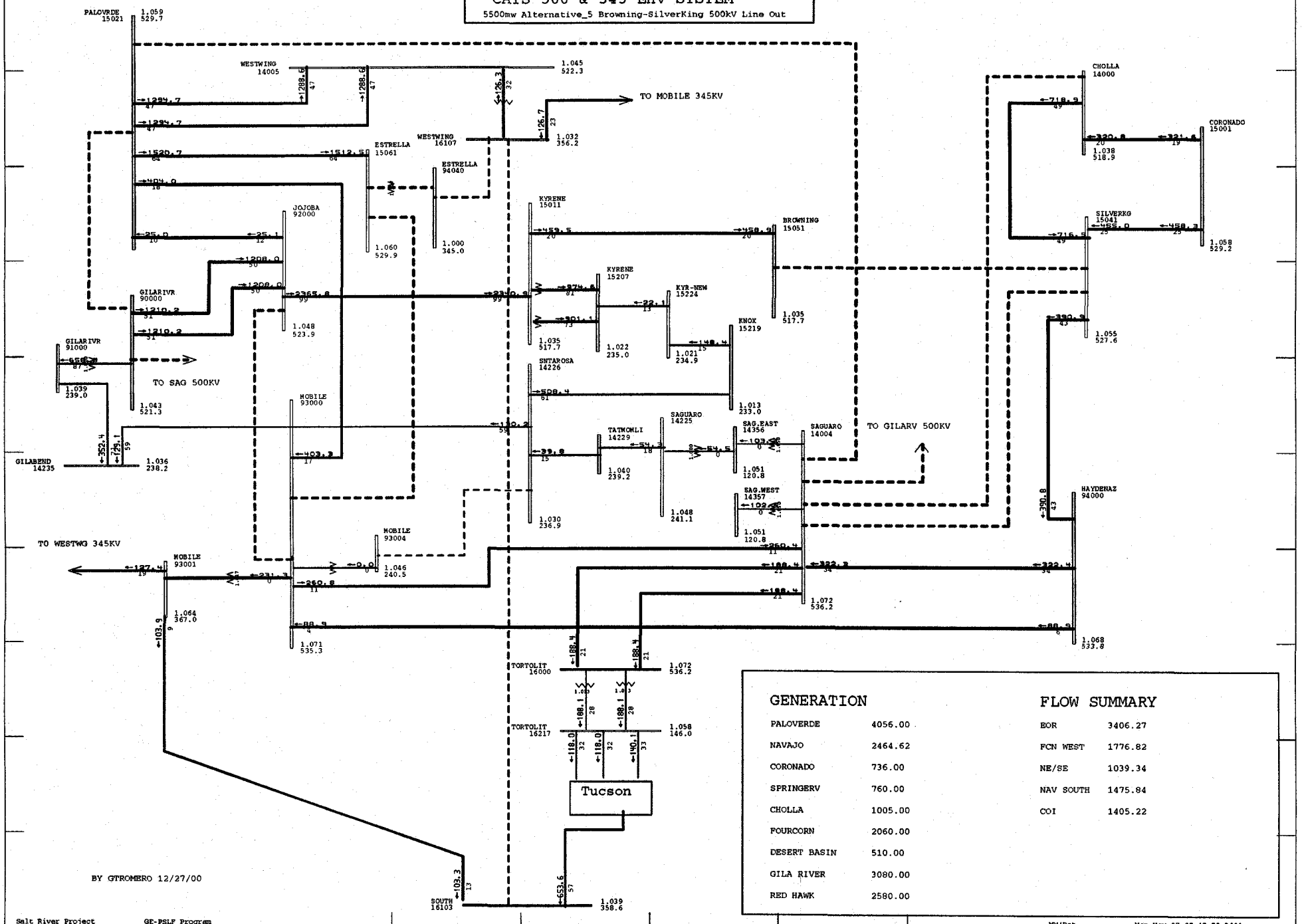

GENERATION

PALOVERDE	4056.00
NAVAJO	2464.62
CORONADO	736.00
SPRINGERV	760.00
CHOLLA	1005.00
FOURCORN	2060.00
DESERT BASIN	510.00
GILA RIVER	3080.00
RED HAWK	2580.00

FLOW SUMMARY

EOR	3406.27
FCN WEST	1776.82
NE/SE	1039.34
NAV SOUTH	1475.84
COI	1405.22

Salt River Project GE-PSLF Program MW/Pct Mon May 07 08:43:39 2001

SRP

CATS CASE REVISION 4 NOVEMBER 3, 2000
CREATED FROM 2002 LS1 WITH 90 PERCENT 2005 HS3 ARIZONA LOADS
AND ANTICIPATED 2005 ARIZONA TOPOLOGY; CATS ALTERNATIVES NOT

PRESENTLY INCLUDED; COMPILED BY K. PECK

p:\users\gtromero\pslf\draw\ca
P:\users\gtromero\pslf\CATS\ca
Rating = 2

CATS 500 & 345 EHV SYSTEM

5500mw Alternative_5 Coronado-SilverKing 500kV Line Out

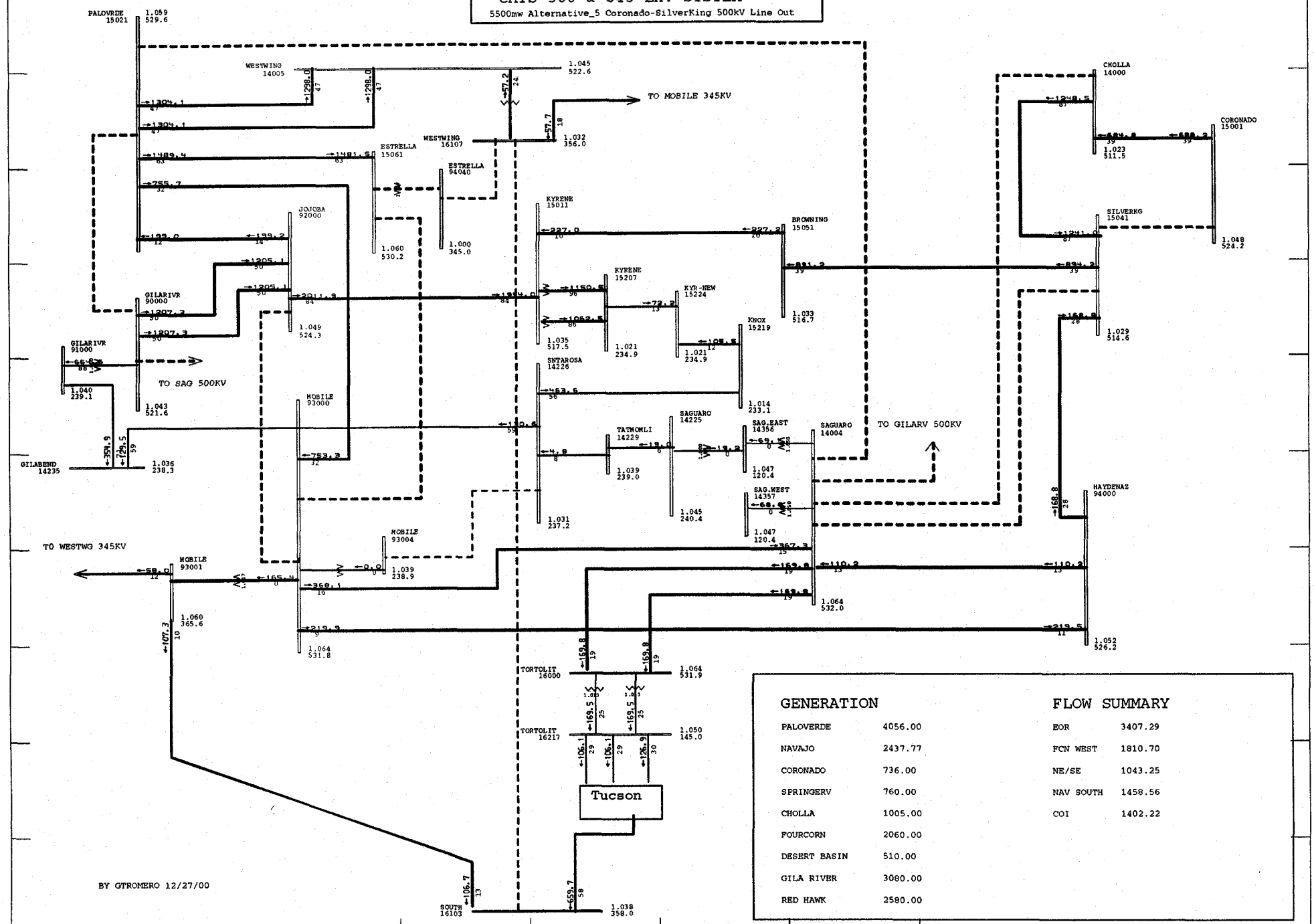

GENERATION

PALOVERDE	4056.00
NAVAJO	2437.77
CORONADO	736.00
SPRINGERV	760.00
CHOLLA	1005.00
FOURCORN	2060.00
DESERT BASIN	510.00
GILA RIVER	3080.00
RED HAWK	2580.00

FLOW SUMMARY

EOR	3407.29
FCN WEST	1810.70
NE/SE	1043.25
NAV SOUTH	1458.56
COI	1402.22

Salt River Project GE-PSLF Program MW/Pct Wed May 09 10:47:12 2001

SRP

CATS CASE REVISION 4 NOVEMBER 3, 2000
CREATED FROM 2002 LS1 WITH 90 PERCENT 2005 HS3 ARIZONA LOADS
AND ANTICIPATED 2005 ARIZONA TOPOLOGY; CATS ALTERNATIVES NOT

PRESENTLY INCLUDED; COMPILED BY K. PECK

p:\users\gtromero\pslf\draw\ca
P:\users\gtromero\pslf\CATS\ca
Rating = 2

CATS 500 & 345 EHV SYSTEM

5500mw Alternative_5 Palo Verde-Estrella 500kV Line Out

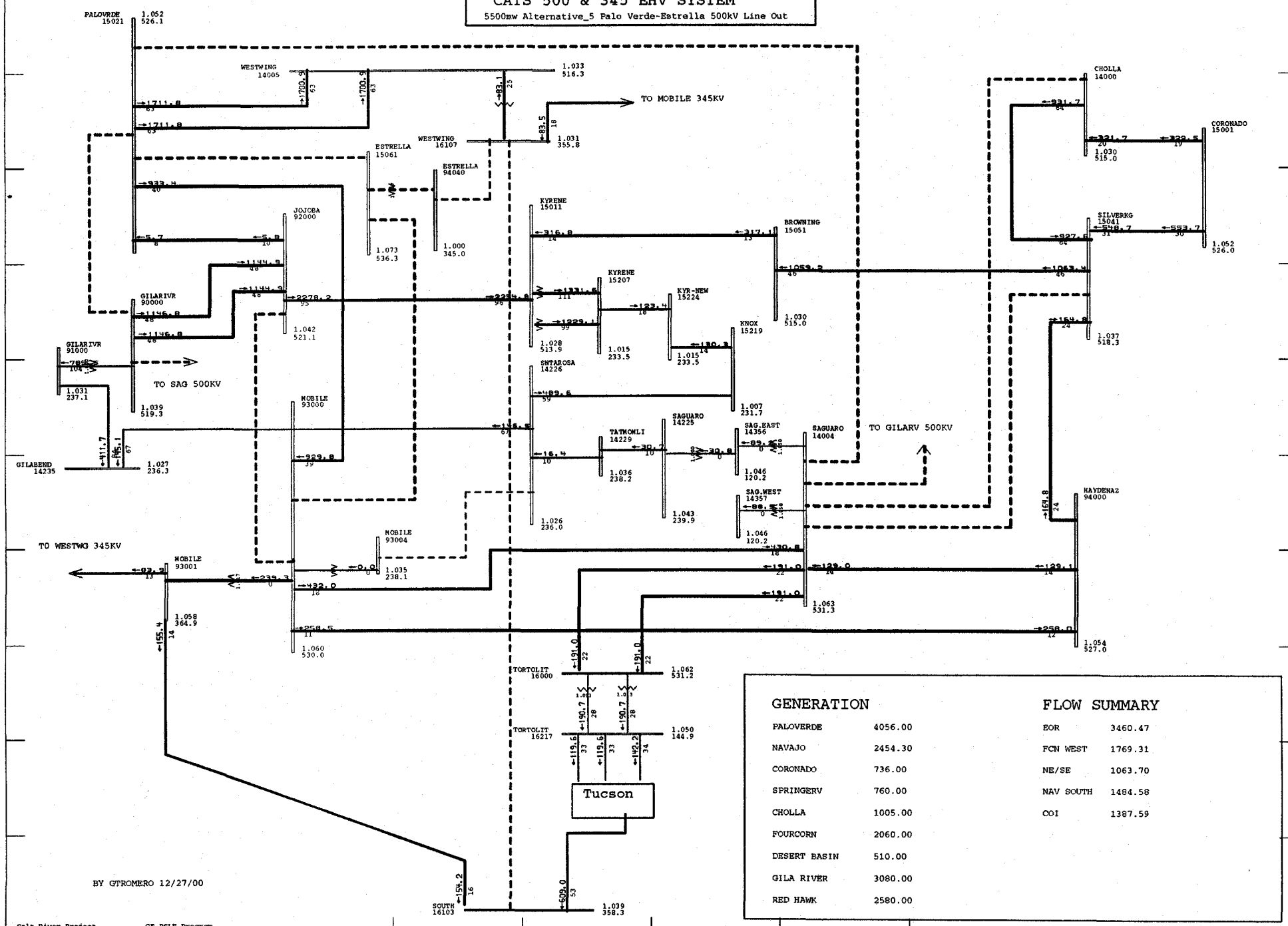

GENERATION

PALOVERDE	4056.00
NAVAJO	2454.30
CORONADO	736.00
SPRINGERV	760.00
CHOLLA	1005.00
FOURCORN	2060.00
DESERT BASIN	510.00
GILA RIVER	3080.00
RED HAWK	2580.00

FLOW SUMMARY

EOR	3460.47
FCN WEST	1769.31
NE/SE	1063.70
NAV SOUTH	1484.58
COI	1387.59

Salt River Project GE-PSLF Program MW/Pct Mon May 07 08:42:00 2001

SRP

CATS CASE REVISION 4 NOVEMBER 3, 2000
CREATED FROM 2002 LS1 WITH 90 PERCENT 2005 HS3 ARIZONA LOADS
AND ANTICIPATED 2005 ARIZONA TOPOLOGY; CATS ALTERNATIVES NOT

PRESENTLY INCLUDED; COMPILED BY K. PECK

p:\users\gtromero\pslf\draw\ca
P:\users\gtromero\pslf\CATS\ca
Rating = 2

CATS 500 & 345 EHV SYSTEM

5685mw Alternative_1 Browning-SilverKing 500kV Line Out

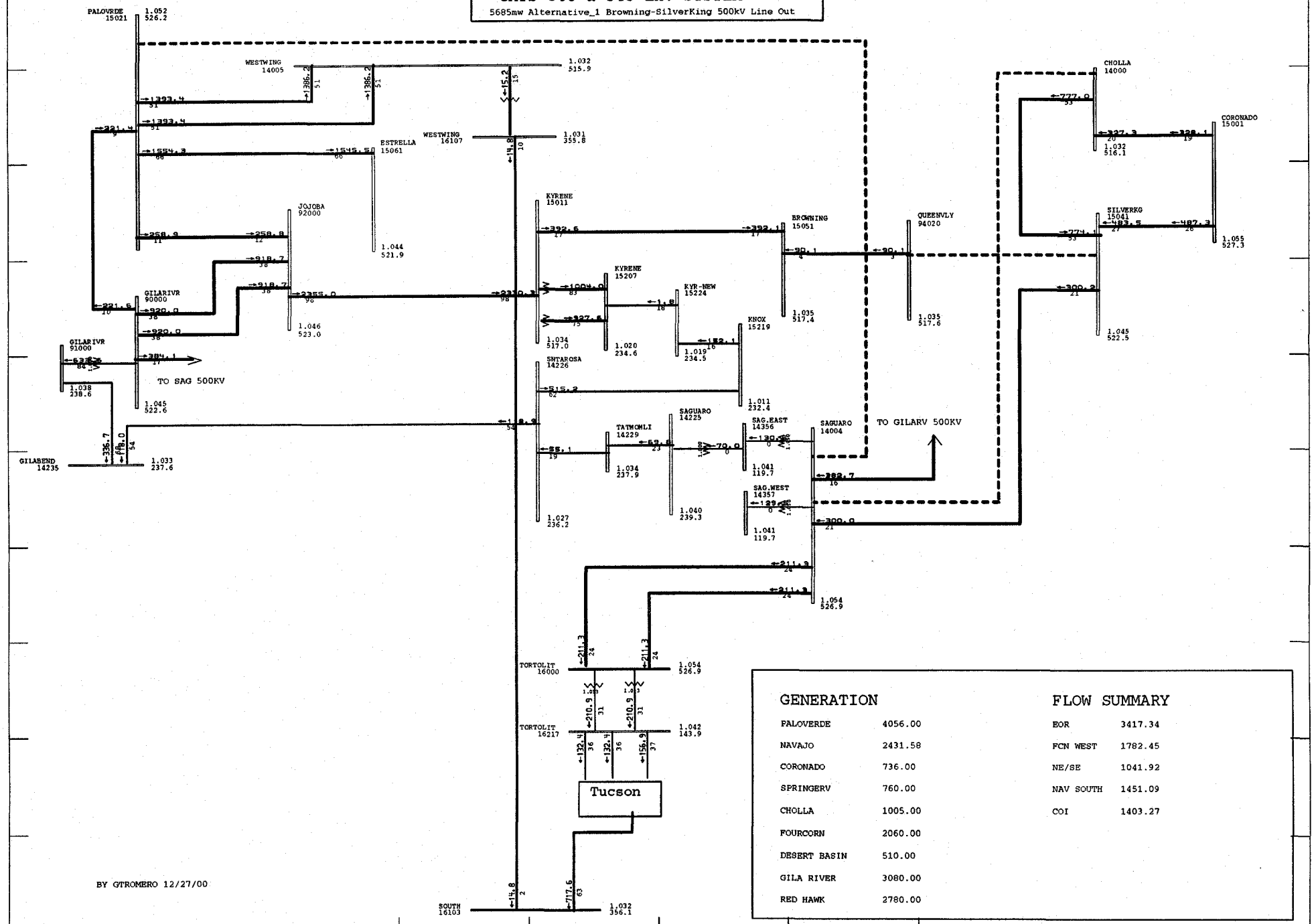

GENERATION

PALOVERDE	4056.00
NAVAJO	2431.58
CORONADO	736.00
SPRINGERV	760.00
CHOLLA	1005.00
FOURCORN	2060.00
DESERT BASIN	510.00
GILA RIVER	3080.00
RED HAWK	2780.00

FLOW SUMMARY

EOR	3417.34
FCN WEST	1782.45
NE/SE	1041.92
NAV SOUTH	1451.09
COI	1403.27

BY GTROMERO 12/27/00

Salt River Project GE-PSLF Program MW/Pct Mon May 07 10:46:57 2001

SRP

CATS CASE REVISION 4 NOVEMBER 3, 2000
CREATED FROM 2002 LS1 WITH 90 PERCENT 2005 HS3 ARIZONA LOADS
AND ANTICIPATED 2005 ARIZONA TOPOLOGY; CATS ALTERNATIVES NOT

PRESENTLY INCLUDED; COMPILED BY K. PECK

p:\users\gtromero\pslf\draw\ca
p:\users\gtromero\pslf\cats\ca
Rating = 2

CATS 500 & 345 EHV SYSTEM

5685mw Alternative_1 Palo Verde-Estrella 500kV Line Out

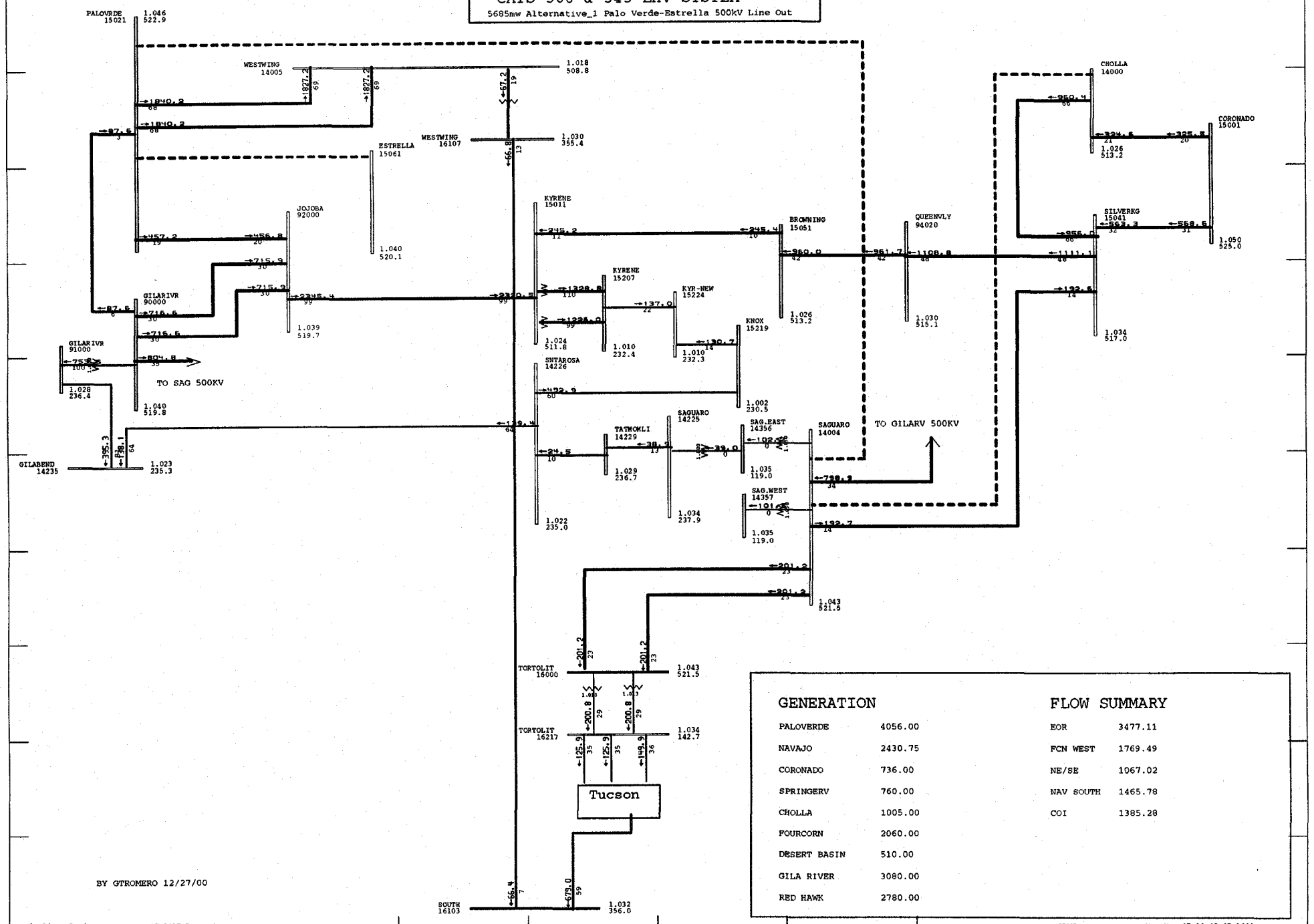

GENERATION

PALOVERDE	4056.00
NAVAJO	2430.75
CORONADO	736.00
SPRINGERV	760.00
CHOLLA	1005.00
FOURCORN	2060.00
DESERT BASIN	510.00
GILA RIVER	3080.00
RED HAWK	2780.00

FLOW SUMMARY

EOR	3477.11
FCN WEST	1769.49
NE/SE	1067.02
NAV SOUTH	1465.78
COI	1385.28

BY GTROMERO 12/27/00

Salt River Project GE-PSLF Program MW/Pct Mon May 07 10:45:07 2001

SRP

CATS CASE REVISION 4 NOVEMBER 3, 2000
CREATED FROM 2002 LS1 WITH 90 PERCENT 2005 HS3 ARIZONA LOADS
AND ANTICIPATED 2005 ARIZONA TOPOLOGY; CATS ALTERNATIVES NOT

PRESENTLY INCLUDED; COMPILED BY K. PECK

p:\users\gtromero\pslf\draw\ca
p:\users\gtromero\pslf\cats\ca
Rating = 2

CATS 500 & 345 EHV SYSTEM

6100mw Alternative_5 Browning-SilverKing 500kV Line Out

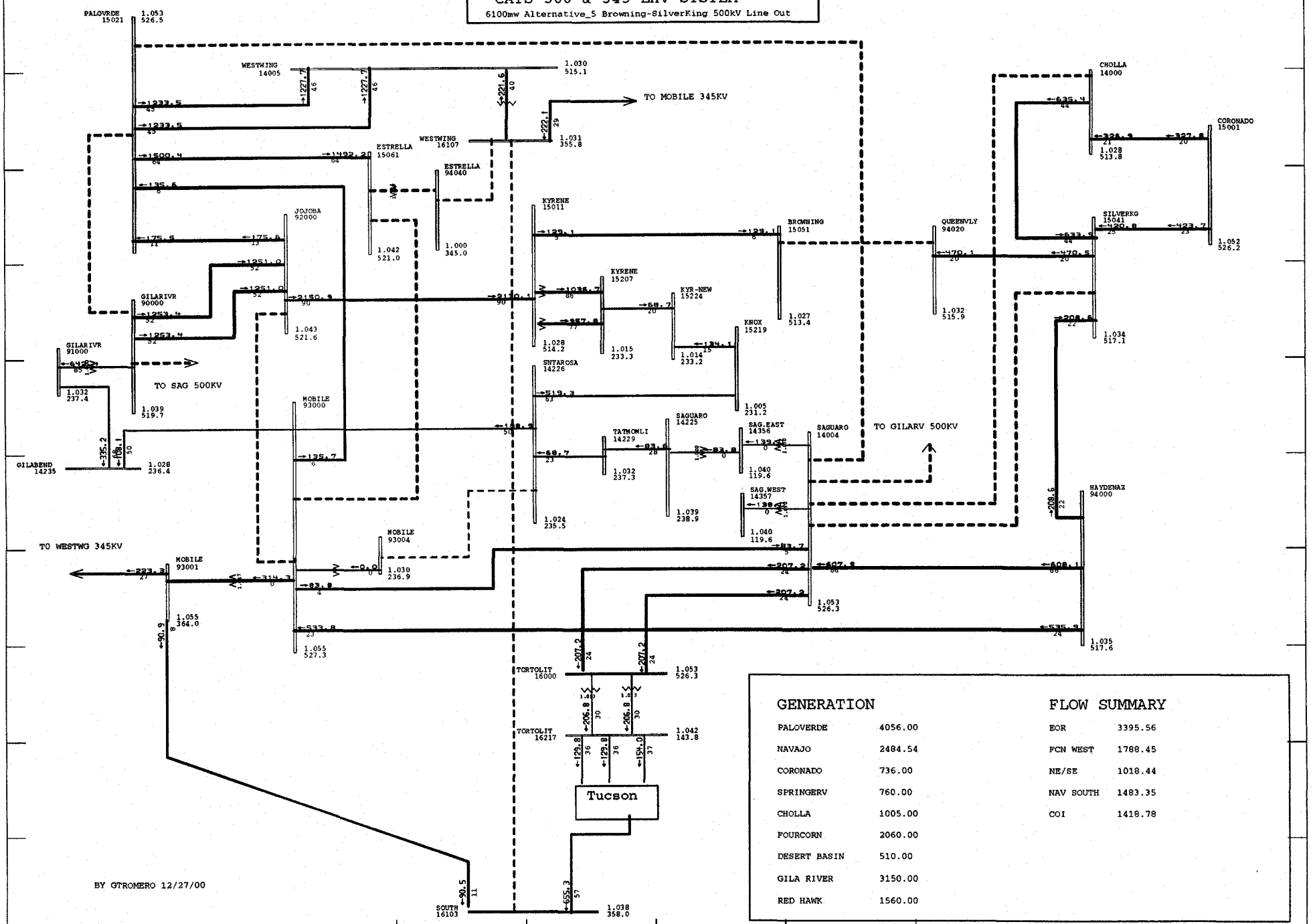

GENERATION

PALOVERDE	4056.00
NAVAJO	2484.54
CORONADO	736.00
SPRINGERV	760.00
CHOLLA	1005.00
FOURCORN	2060.00
DESERT BASIN	510.00
GILA RIVER	3150.00
RED HAWK	1560.00

FLOW SUMMARY

EOR	3395.56
FCN WEST	1788.45
NE/SE	1018.44
NAV SOUTH	1483.35
COI	1418.78

Salt River Project GE-PSLF Program MW/Pct Tue May 08 08:58:08 2001

SRP

CATS CASE REVISION 4 NOVEMBER 3, 2000
CREATED FROM 2002 LS1 WITH 90 PERCENT 2005 HS3 ARIZONA LOADS
AND ANTICIPATED 2005 ARIZONA TOPOLOGY; CATS ALTERNATIVES NOT

PRESENTLY INCLUDED; COMPILED BY K. PECK
CATS_6500_HD2000.SAV

p:\users\gtromero\pslf\draw\ca
P:\users\gtromero\pslf\CATS\ca
Rating = 2

CATS 500 & 345 EHV SYSTEM

6100mw Alternative_5 Palo Verde-Estrella 500kV Line Out

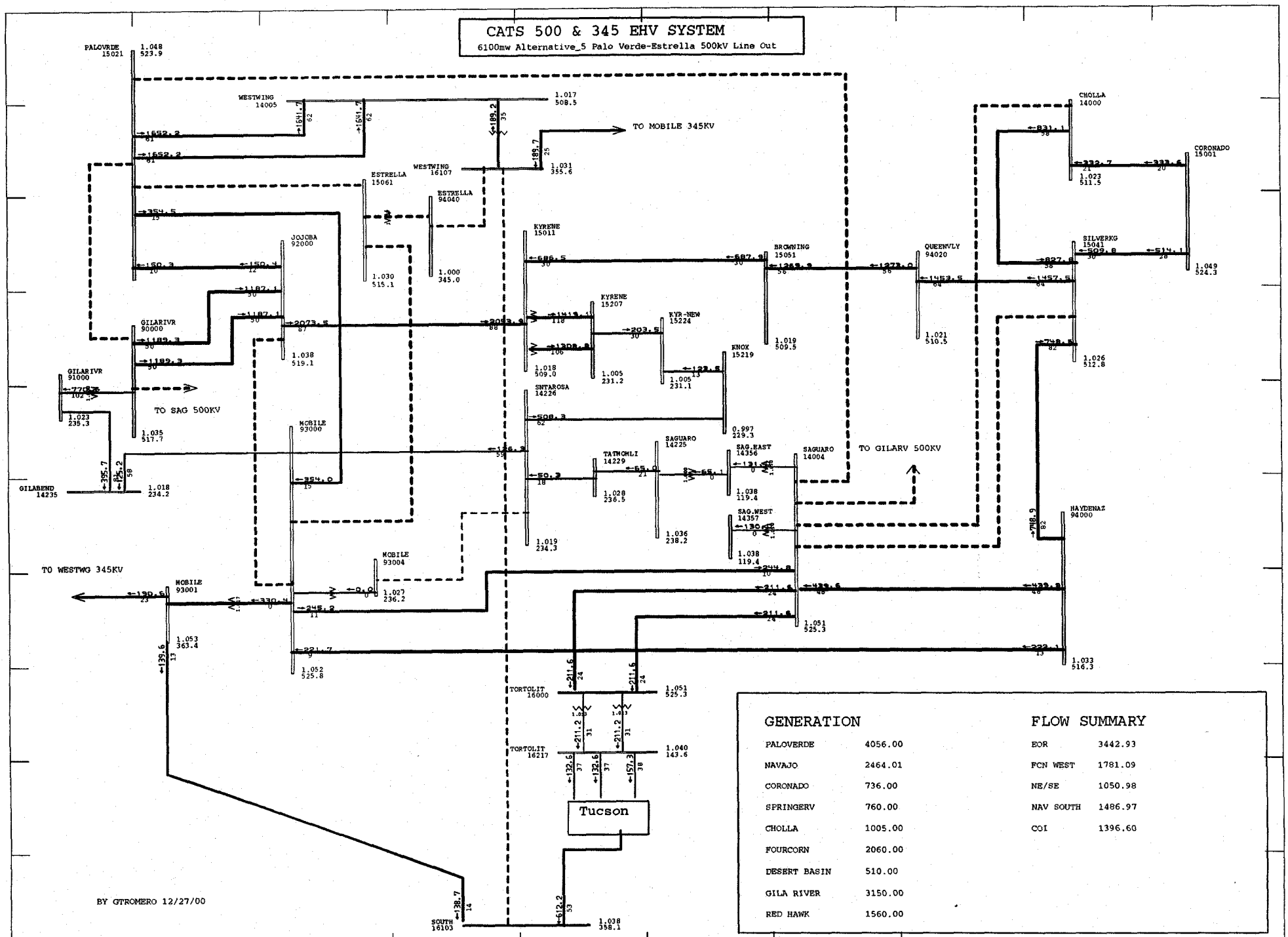

GENERATION

PALOVERDE	4056.00
NAVAJO	2464.01
CORONADO	736.00
SPRINGERV	760.00
CHOLLA	1005.00
FOURCORN	2060.00
DESERT BASIN	510.00
GILA RIVER	3150.00
RED HAWK	1560.00

FLOW SUMMARY

EOR	3442.93
FCN WEST	1781.09
NE/SE	1050.98
NAV SOUTH	1486.97
COI	1396.60

Salt River Project GE-PSLF Program MW/Pct Tue May 08 08:49:39 2001

SRP

CATS CASE REVISION 4 NOVEMBER 3, 2000
CREATED FROM 2002 LS1 WITH 90 PERCENT 2005 HS3 ARIZONA LOADS
AND ANTICIPATED 2005 ARIZONA TOPOLOGY; CATS ALTERNATIVES NOT

PRESENTLY INCLUDED; COMPILED BY K. PECK
CATS_6500_HD2000.SAV

p:\users\gtromero\pslf\draw\ca
P:\users\gtromero\pslf\CATS\ca
Rating = 2

CATS 500 & 345 EHV SYSTEM

6100mw Alternative_5 Palo Verde-Estrella 500kV Line Out

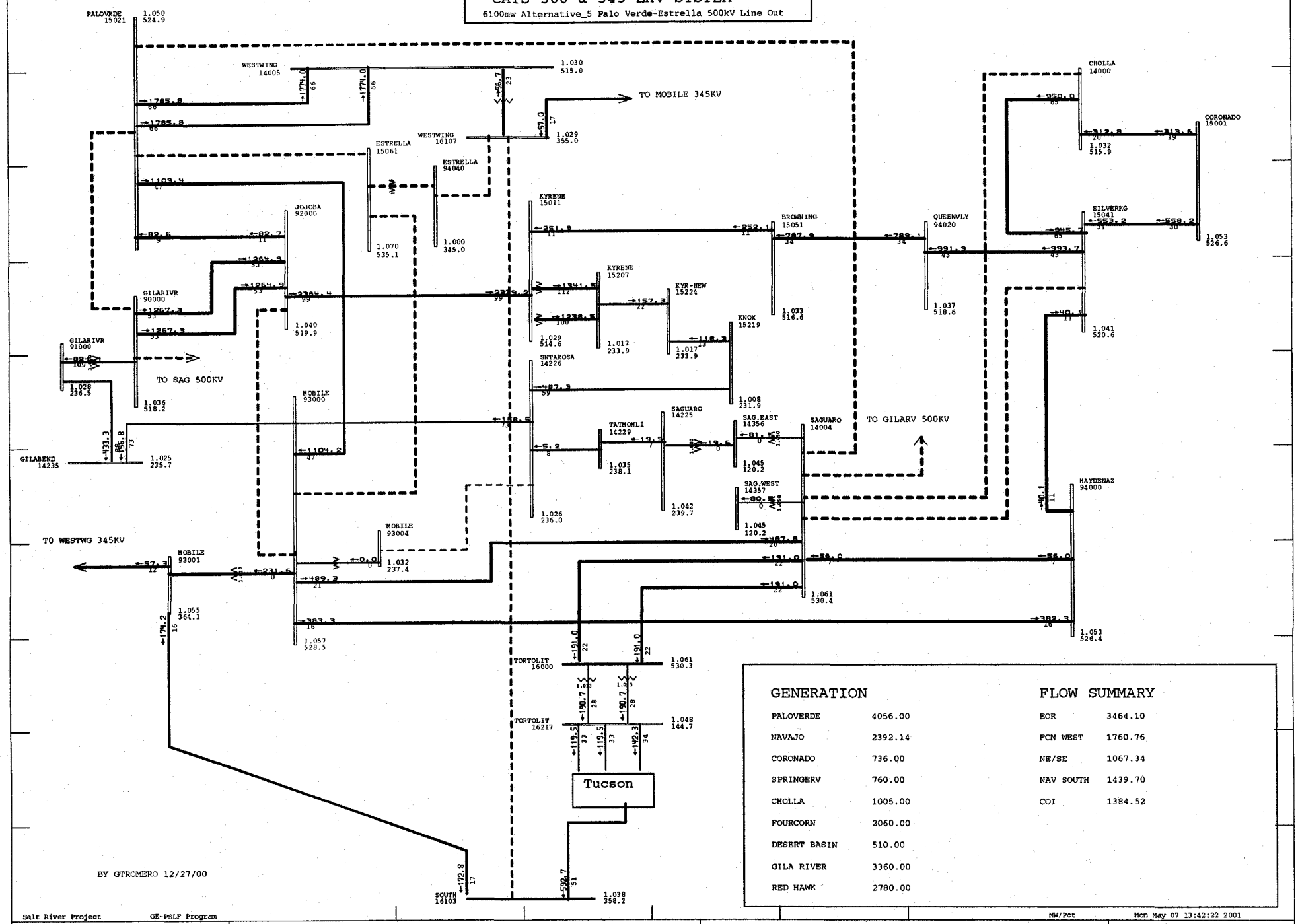

GENERATION

PALOVERDE	4056.00
NAVAJO	2392.14
CORONADO	736.00
SPRINGERV	760.00
CHOLLA	1005.00
FOURCORN	2060.00
DESERT BASIN	510.00
GILA RIVER	3360.00
RED HAWK	2780.00

FLOW SUMMARY

EOR	3464.10
FCN WEST	1760.76
NE/SE	1067.34
NAV SOUTH	1439.70
COI	1384.52

Salt River Project GE-PSLF Program MW/Pct Mon May 07 13:42:22 2001

SRP

CATS CASE REVISION 4 NOVEMBER 3, 2000
CREATED FROM 2002 LS1 WITH 90 PERCENT 2005 HS3 ARIZONA LOADS
AND ANTICIPATED 2005 ARIZONA TOPOLOGY; CATS ALTERNATIVES NOT

PRESENTLY INCLUDED; COMPILED BY K. PECK

p:\users\gtromero\pslf\draw\ca
p:\users\gtromero\pslf\cats\ca
Rating = 2

CATS 500 & 345 EHV SYSTEM

7500mw Alternative_5 Browning-SilverKing Line Out

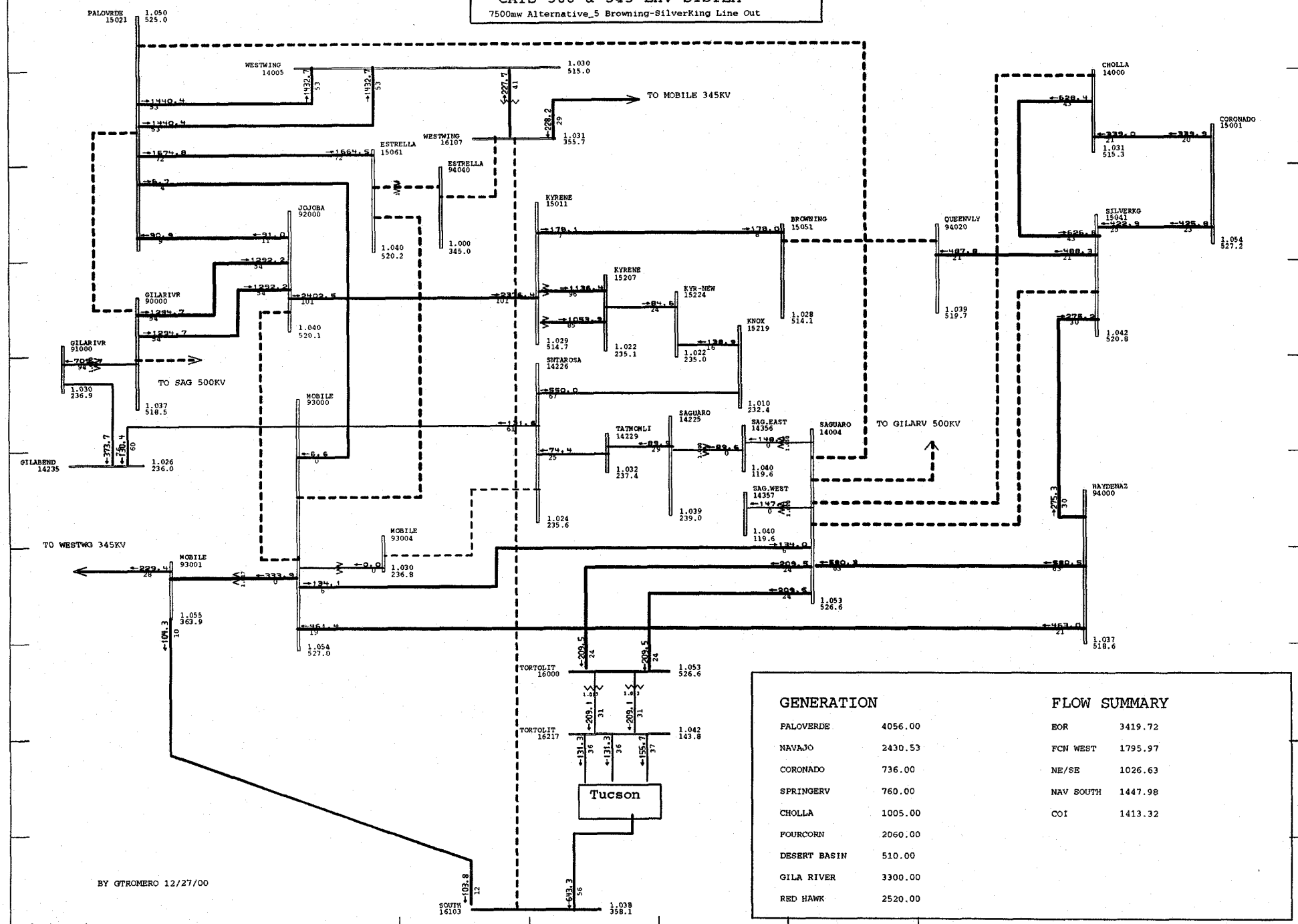

GENERATION

PALOVERDE	4056.00
NAVAJO	2430.53
CORONADO	736.00
SPRINGERV	760.00
CHOLLA	1005.00
POURCORN	2060.00
DESERT BASIN	510.00
GILA RIVER	3300.00
RED HAWK	2520.00

FLOW SUMMARY

EOR	3419.72
FCN WEST	1795.97
NE/SE	1026.63
NAV SOUTH	1447.98
COI	1413.32

Salt River Project GE-PSLF Program MW/Pct Tue May 08 09:11:48 2001

SRP

CATS CASE REVISION 4 NOVEMBER 3, 2000
CREATED FROM 2002 LS1 WITH 90 PERCENT 2005 HS3 ARIZONA LOADS
AND ANTICIPATED 2005 ARIZONA TOPOLOGY; CATS ALTERNATIVES NOT

PRESENTLY INCLUDED; COMPILED BY K. PECK

p:\users\gtromero\pslf\draw\ca
P:\users\gtromero\pslf\CATS\ca
Rating = 2

CATS 500 & 345 EHV SYSTEM

7500mw Alternative_5 Palo Verde-Estrella Line Out

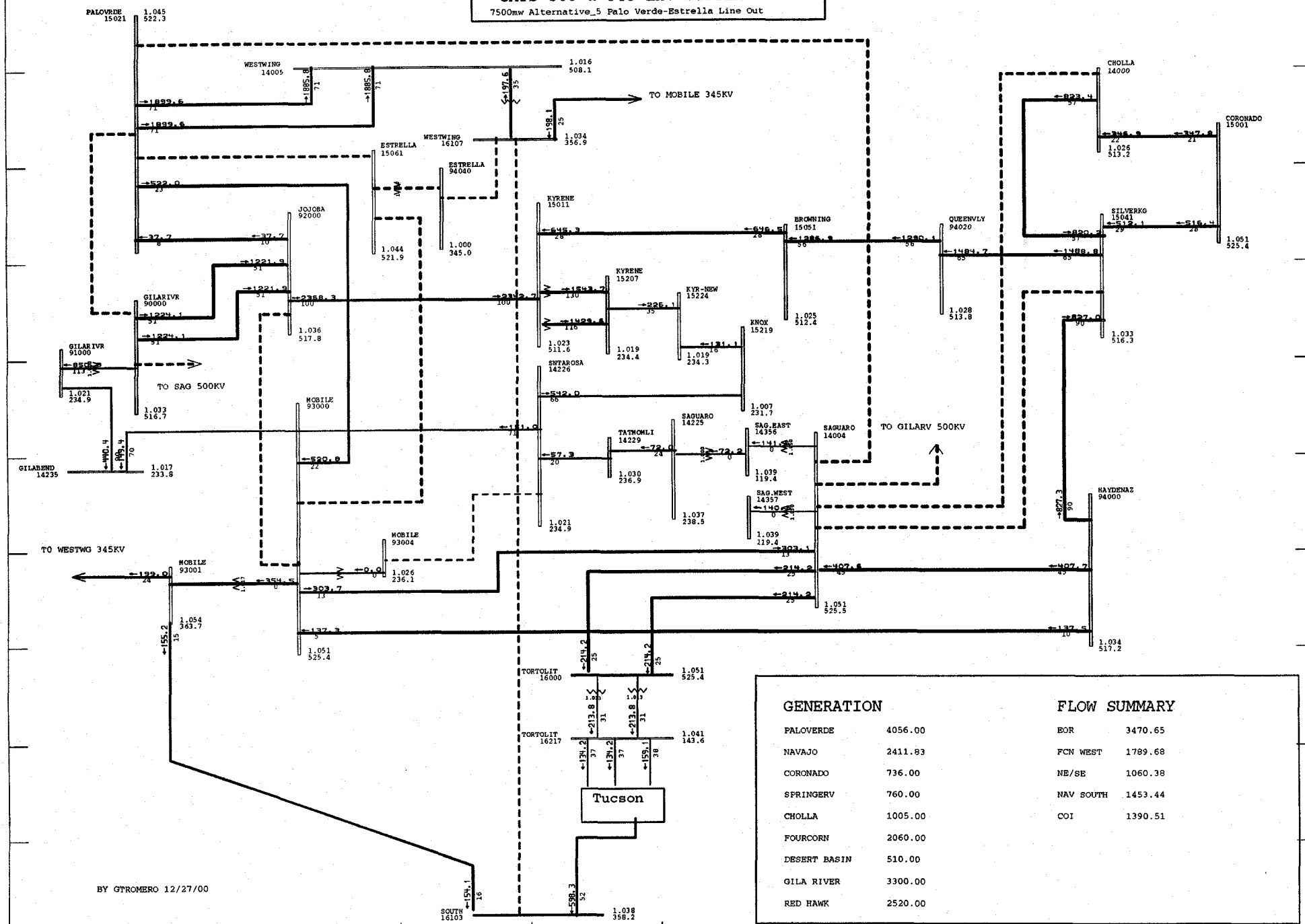

GENERATION

PALOVERDE	4056.00
NAVAJO	2411.83
CORONADO	736.00
SPRINGERV	760.00
CHOLLA	1005.00
FOURCORN	2060.00
DESERT BASIN	510.00
GILA RIVER	3300.00
RED HAWK	2520.00

FLOW SUMMARY

EOR	3470.65
FCN WEST	1789.68
NE/SE	1060.38
NAV SOUTH	1453.44
COI	1390.51

Salt River Project GE-PSLF Program MW/Pct Tue May 08 09:09:59 2001

SRP

CATS CASE REVISION 4 NOVEMBER 3, 2000
CREATED FROM 2002 LS1 WITH 90 PERCENT 2005 HS3 ARIZONA LOADS
AND ANTICIPATED 2005 ARIZONA TOPOLOGY; CATS ALTERNATIVES NOT

PRESENTLY INCLUDED; COMPILED BY K. PECK

p:\users\gtromero\pslf\draw\ca
P:\users\gtromero\pslf\CATS\ca
Rating = 2

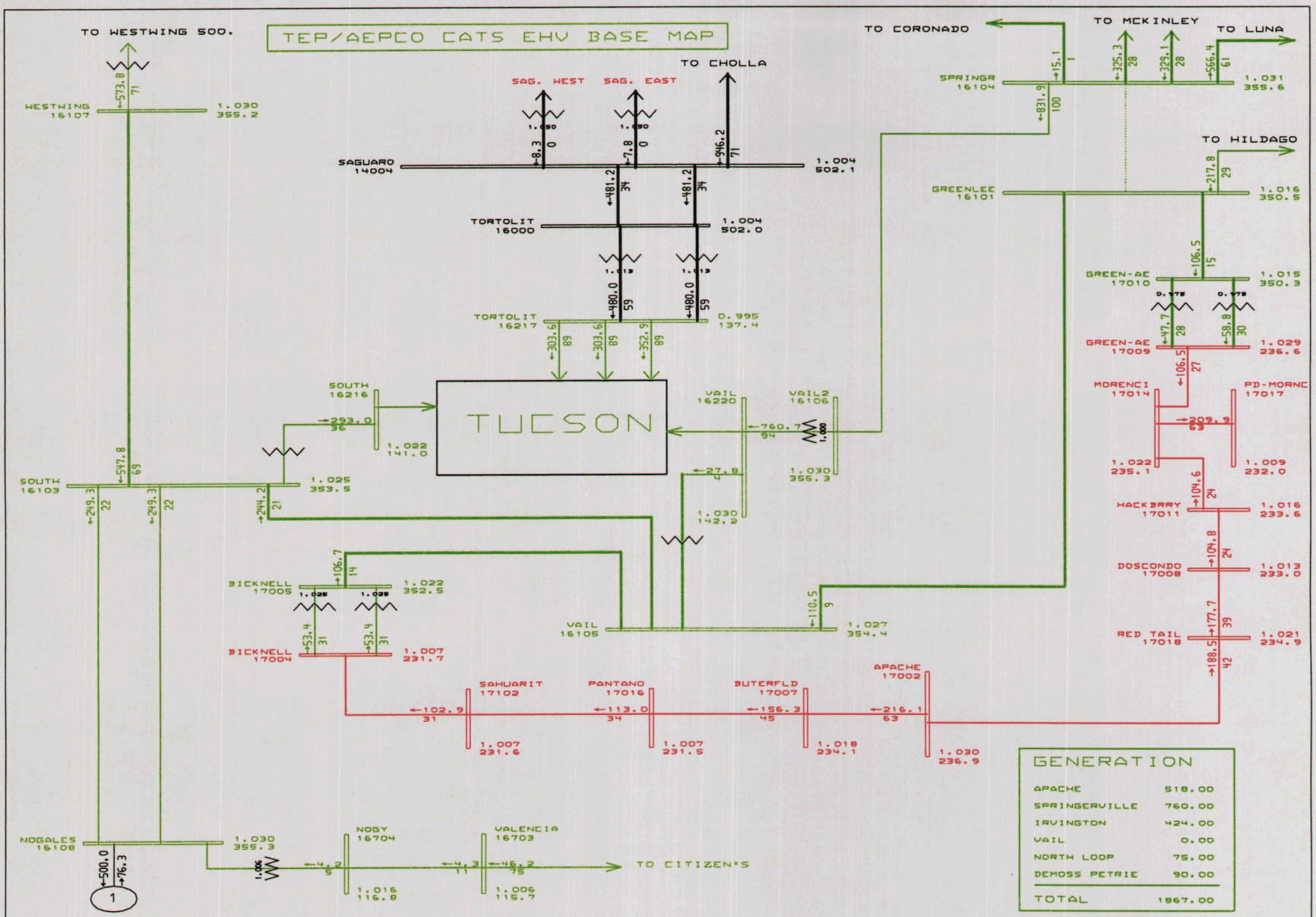

General Electric International, Inc. PSLF Program MW/Pct Fri Jun 08 18:18:07 2001

GENERAL ELECTRIC COMPANY

CATS BASE
LIMITING ELEMENT: SPRINGERVILLE - VAIL2
OUTAGE ELEMENT: SPRINGERVILLE - GREENLEE

maps\cats_base.drw
d:\cats\c4f_9001d_mexa0pv.sav
Rating = 2

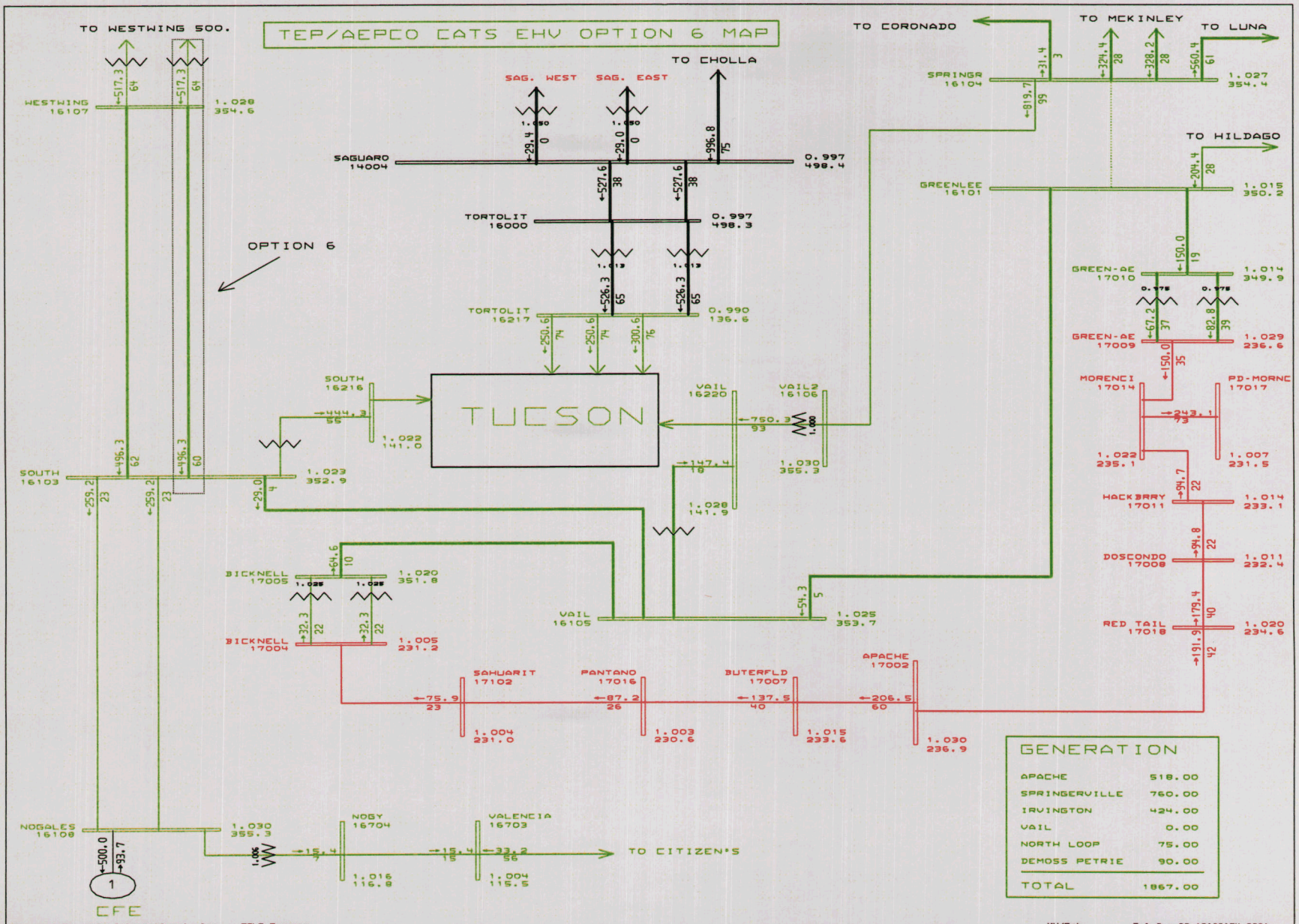

General Electric International, Inc. PSLF Program MW/Pct Fri Jun 08 18:06:54 2001

GENERAL ELECTRIC COMPANY

CATS OPTION 6
LIMITING ELEMENT: SPRINGERVILLE - VAIL2
OUTAGE ELEMENT: SPRINGERVILLE - GREENLEE

maps\cats_opt6.drw
d:\cats\c4f_14001d_mexa0pv1.sa
Rating = 2

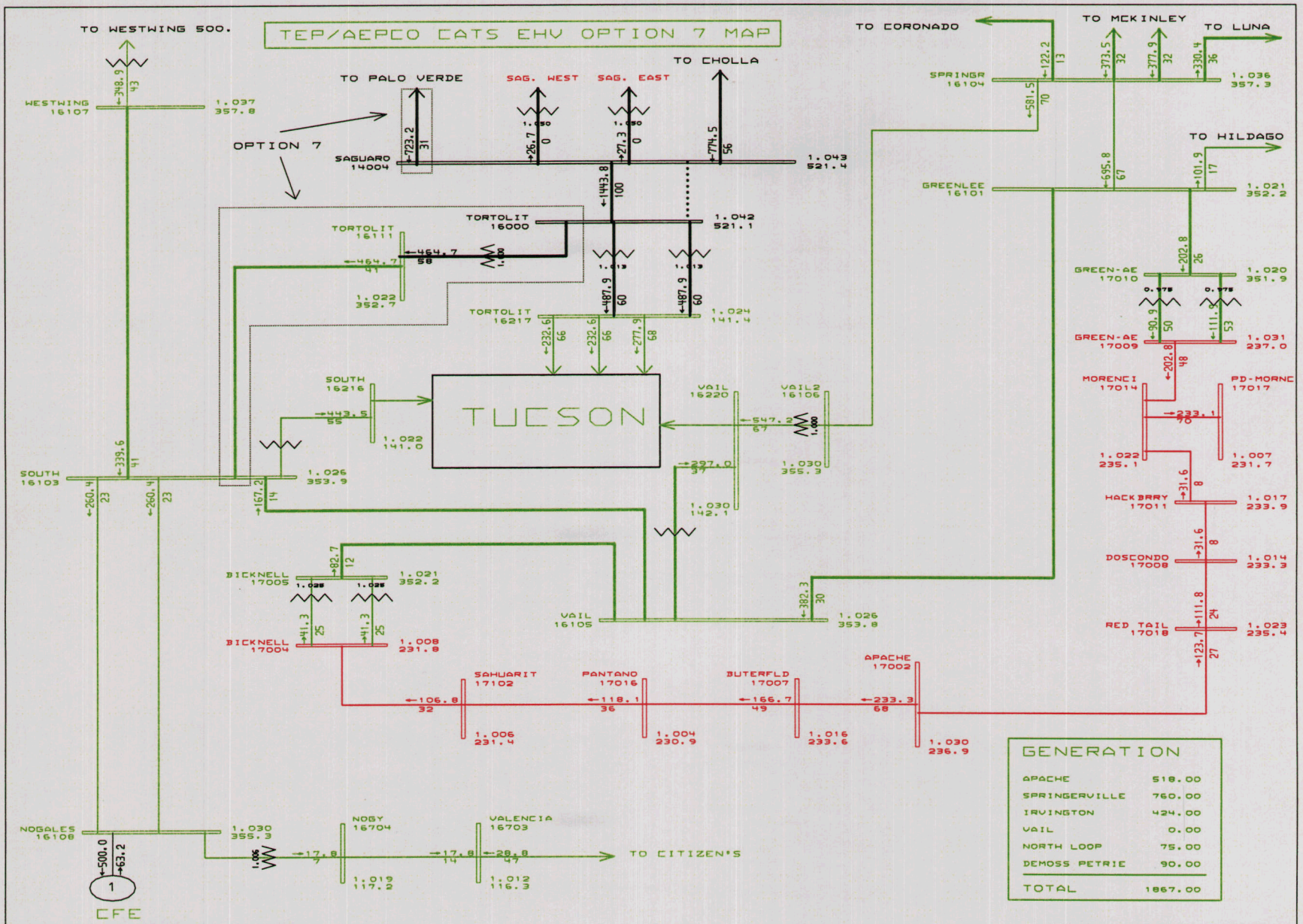

General Electric International, Inc. | PSLF Program | MW/Pct | Fri Jun 08 18:25:46 2001

GENERAL ELECTRIC COMPANY

CATS OPTION 7
LIMITING ELEMENT: SAGUARO - TORTOLITA NO. 1
OUTAGE ELEMENT: SAGUARO - TORTOLITA NO. 2

maps\cats_opt7.drw
d:\cats\c4f_1250ld_mexa0pv24.s
Rating = 2

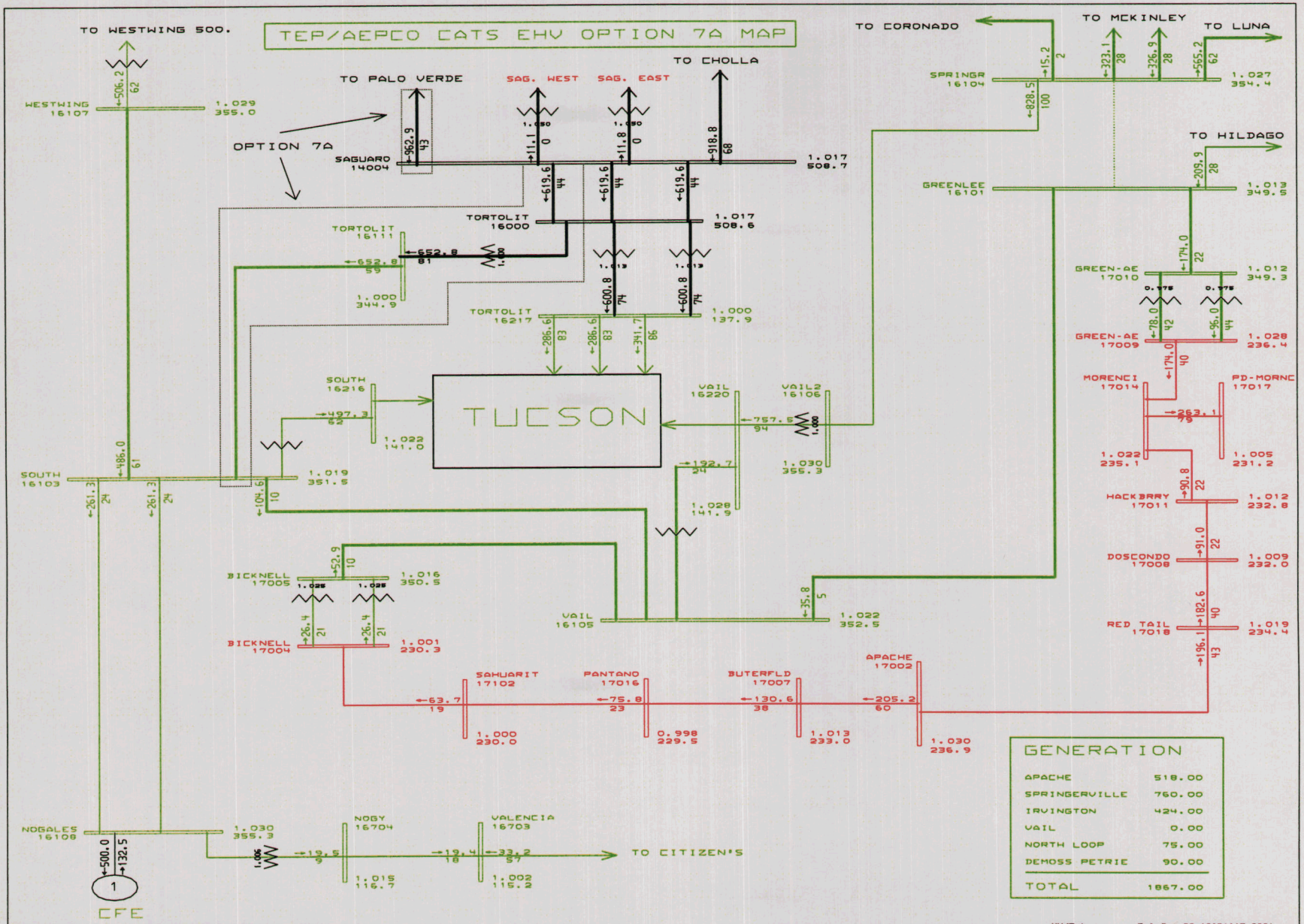

General Electric International, Inc. | PSLF Program | MW/Pct | Fri Jun 08 18:31:15 2001

GENERAL ELECTRIC COMPANY

CATS OPTION 7A
LIMITING ELEMENT: SPRINGERVILLE - VAIL2
OUTAGE ELEMENT: SPRINGERVILLE - GREENLEE

maps\cats_opt7a.drw
d:\cats\c4f_17001d_mexa0pv2a4.
Rating = 2

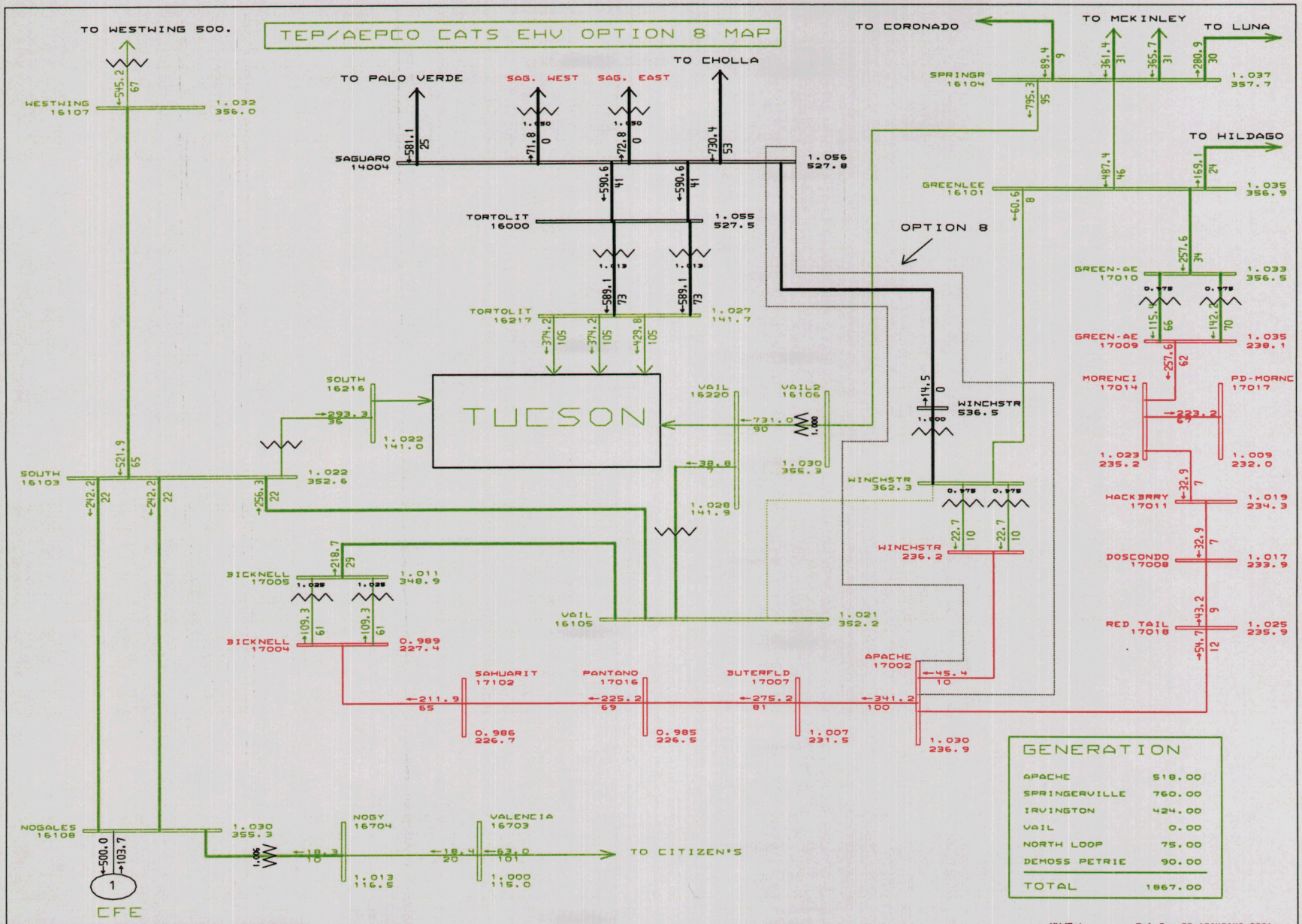

General Electric International, Inc. PSLF Program MW/Pct Fri Jun 08 18:40:40 2001

GENERAL ELECTRIC COMPANY

CATS OPTION 8
LIMITING ELEMENT: APACHE - BUTTERFIELD 230 KV
OUTAGE ELEMENT: WINCHESTER - VAIL 345 KV

maps\cats_opt8.drw
d:\cats\c4f_11001d_mexa0pv34.s
Rating = 2

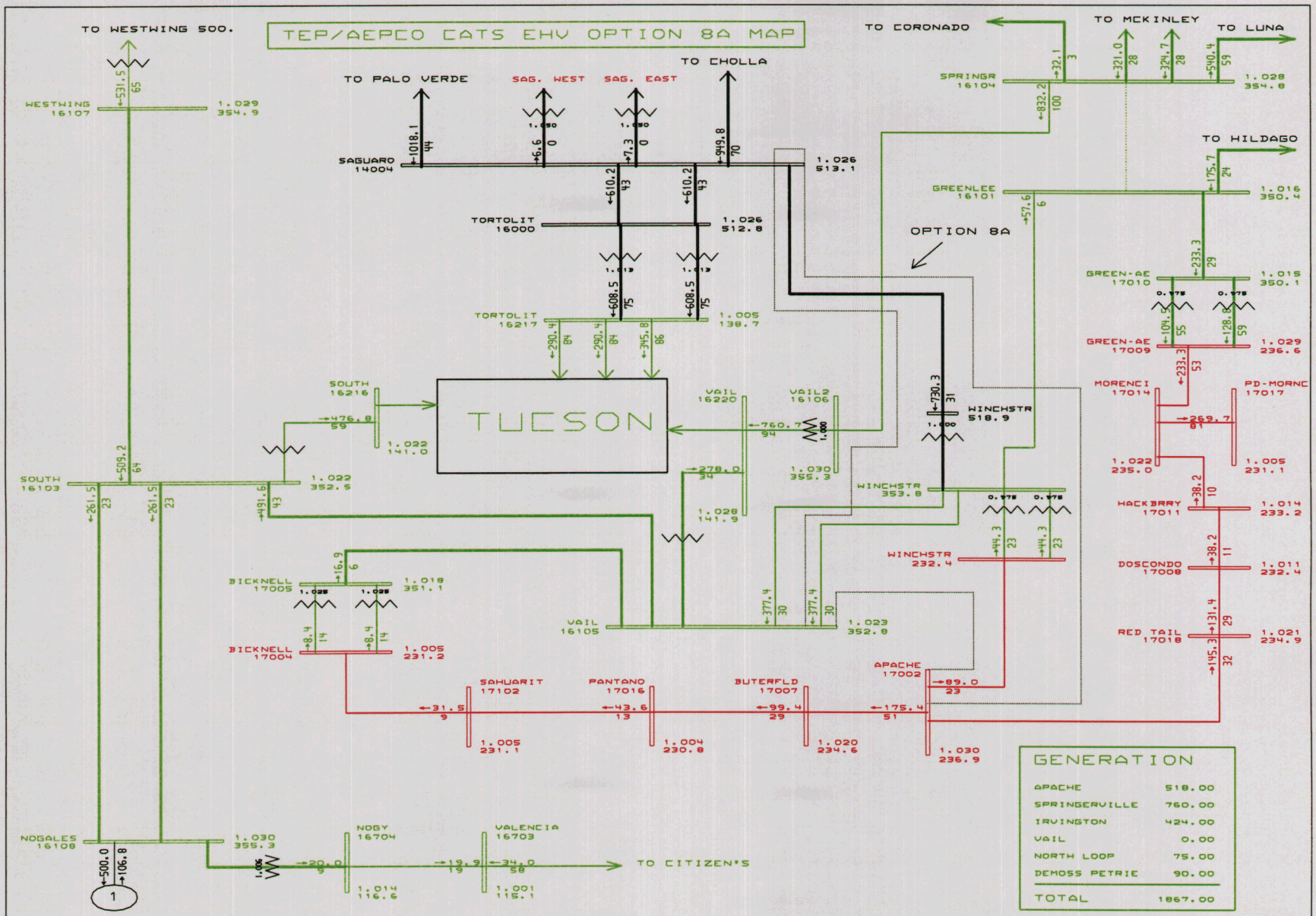

General Electric International, Inc. PSLF Program MW/Pct Fri Jun 08 18:44:26 2001

GENERAL ELECTRIC COMPANY

CATS OPTION 8A
LIMITING ELEMENT: SPRINGERVILLE - VAIL2 345KV
OUTAGE ELEMENT: SPRINGERVILLE - GREENLEE 345KV

maps\cats_opt8a.drw
d:\cats\c4f_18001d_mexa0pv3a4.
Rating = 2

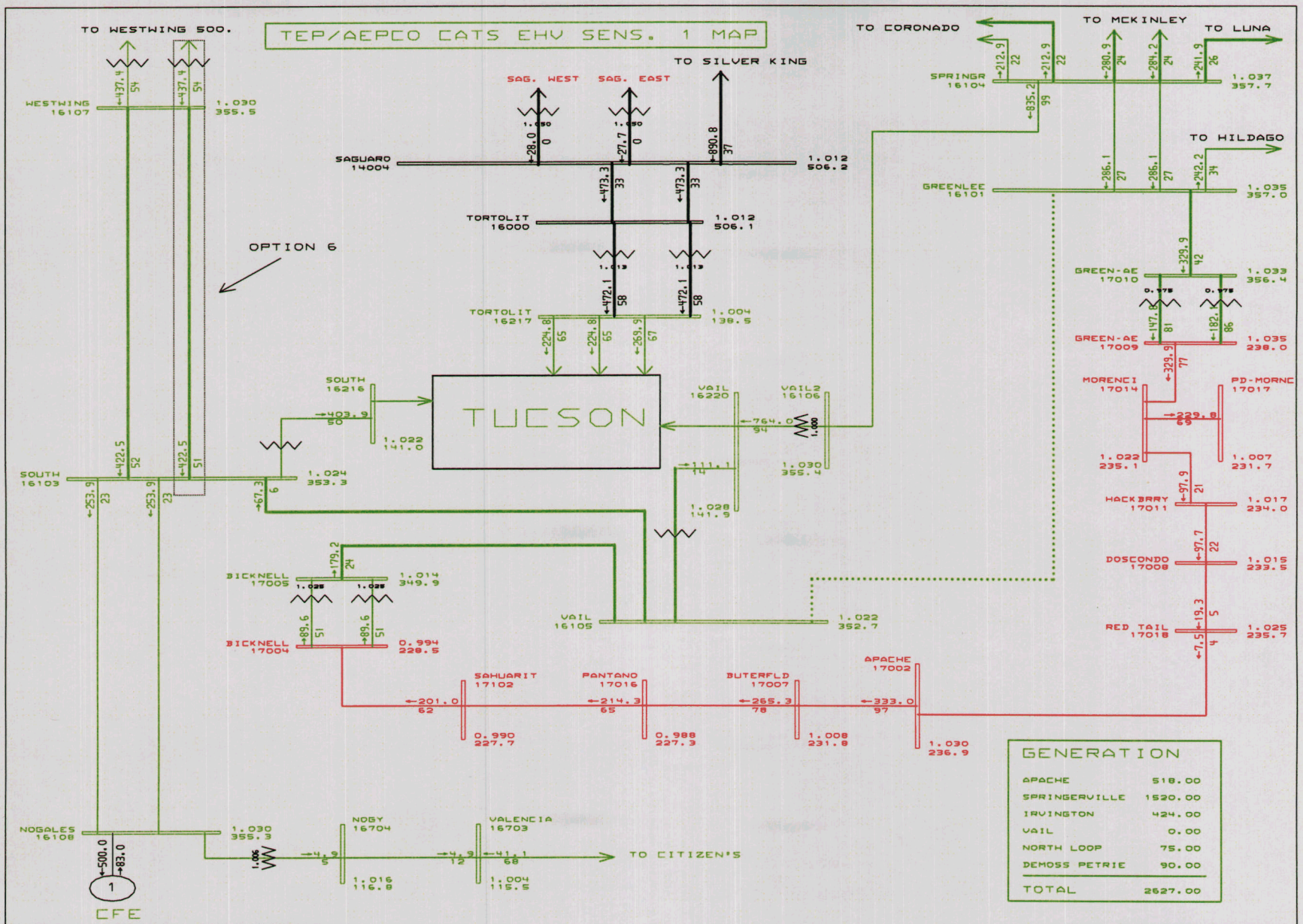

General Electric International, Inc. PSLF Program MW/Pct Fri Jun 08 18:53:27 2001

GENERAL ELECTRIC COMPANY

CATS OPTION 6: SENSIVITY 1
LIMITING ELEMENT: SPRINGERVILLE - VAIL2 345KV
OUTAGE ELEMENT: GREENLEE - VAIL 345KV

maps\cats_sens1.drw
d:\cats\c4f_12001d_mexa0pv1578
Rating = 2

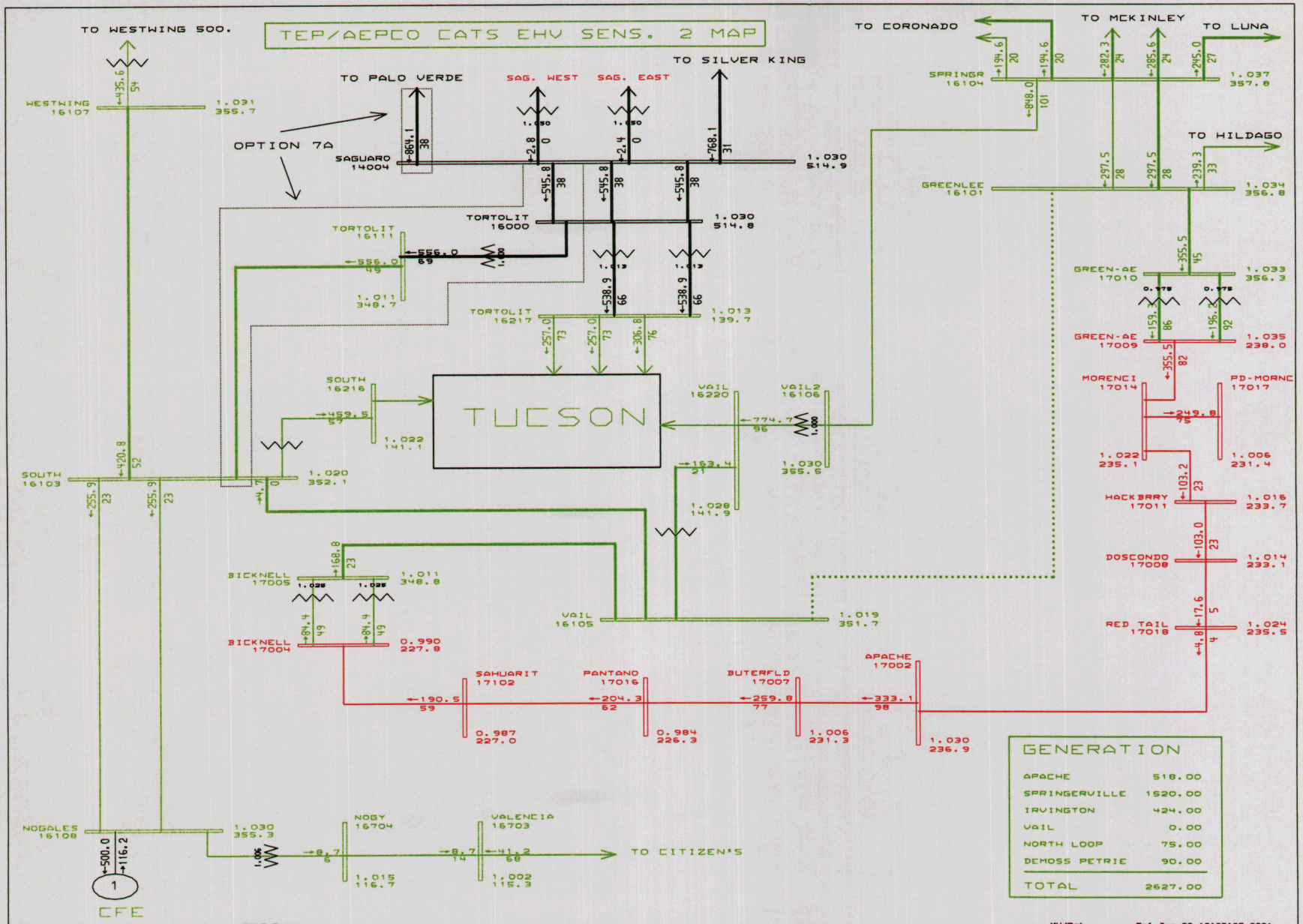
TEP/AEPCO CATS EHV SENS. 2 MAP
TO WESTWING 500.
TO PALO VERDE
SAG. WEST
SAG. EAST
TO SILVER KING
OPTION 7A
WESTWING 16107
SAGUARO 14004
TORTOLIT 16000
TORTOLIT 16111
TORTOLIT 16217
SOUTH 16216
TUCSON
VAIL 16220
VAIL2 16106
SOUTH 16103
BICKNELL 17005
BICKNELL 17004
VAIL 16105
SAHUARIT 17102
PANTANO 17016
BUTERFLD 17007
APACHE 17002
NOGALES 16108
NOBY 16704
VALENCIA 16703
TO CITIZEN'S
CFE
TO CORONADO
TO MCKINLEY
TO LUNA
SPRINGR 16104
TO HILDAGO
GREENLEE 16101
GREEN-AE 17010
GREEN-AE 17009
MORENCI 17014
PD-MORNC 17017
HACKBRRY 17011
DOSCONDO 17008
RED TAIL 17018
GENERATION
APACHE 518.00
SPRINGERVILLE 1520.00
IRVINGTON 424.00
VAIL 0.00
NORTH LOOP 75.00
DEMOSS PETRIE 90.00
TOTAL 2627.00
General Electric International, Inc.
PSLF Program
MW/Pct
Fri Jun 08 19:03:25 2001
GENERAL ELECTRIC COMPANY
CATS OPTION 7A: SENSIVITY 2
LIMITING ELEMENT: SPRINGERVILLE - GREENLEE 345KV
OUTAGE ELEMENT: GREENLEE - VAIL 345KV
maps\cats_sens2.drw
d:\cats\c4f_15001d_mexa0pv2a45
Rating = 2

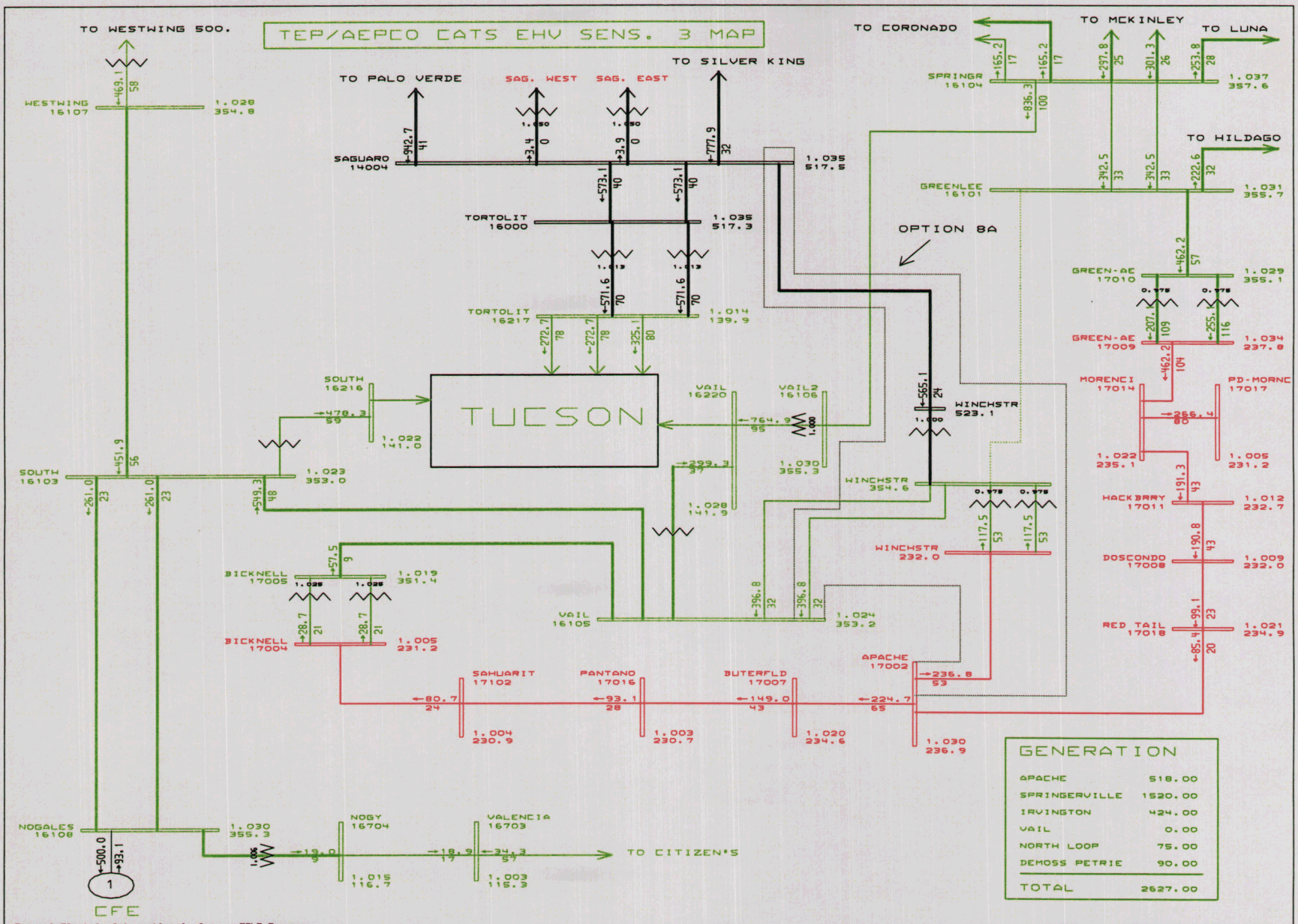
TEP/AEPCO CATS EHV SENS. 3 MAP
TO WESTWING 500.
TO PALO VERDE
SAG. WEST
SAG. EAST
TO SILVER KING
TO CORONADO
TO MCKINLEY
TO LUNA
TO HILDAGO
OPTION 8A
TUCSON
WESTWING 16107
SAGUARO 14004
TORTOLIT 16000
TORTOLIT 16217
SOUTH 16216
SOUTH 16103
VAIL 16220
VAIL2 16106
VAIL 16105
WINCHSTR 523.1
WINCHSTR 354.6
WINCHSTR 232.0
SPRINGR 16104
GREENLEE 16101
GREEN-AE 17010
GREEN-AE 17009
MORENCI 17014
PD-MORNC 17017
HACKBRRY 17011
DOSCONDO 17008
RED TAIL 17018
APACHE 17002
BUTERFLD 17007
PANTANO 17016
SAHUARIT 17102
BICKNELL 17005
BICKNELL 17004
NOGALES 16108
NOGY 16704
VALENCIA 16703
TO CITIZEN'S
CFE
GENERATION
APACHE 518.00
SPRINGERVILLE 1520.00
IRVINGTON 424.00
VAIL 0.00
NORTH LOOP 75.00
DEMOSS PETRIE 90.00
TOTAL 2627.00
General Electric International, Inc.
PSLF Program
MW/Pct
Fri Jun 08 19:19:51 2001
GENERAL ELECTRIC COMPANY
CATS OPTION 8A: SENSITIVITY 3
LIMITING ELEMENT: SPRINGERVILLE - VAIL 2 345KV
OUTAGE ELEMENT: GREENLEE - WINCHESTER 345KV
maps\cats_sens3.drw
d:\cats\c4f_17501d_mexa0pv3a45
Rating = 2

Attachments

Transmission Alternatives:

1. Palo Verde-Gila Bend 500kV, Palo Verde-SW Valley 500kV, Gila Bend-Santa Rosa (500kV or 230kV), Gila Bend-Santa Rosa 500kV, Saguaro-Tucson Area (230kV or 500kV), Loop Silver King into the Cholla-Saguaro 500kV line.

2. Palo Verde-SW Valley 500kV, Palo Verde- Saguaro 500kV, Saguaro-Tucson Area (230kV or 500kV), Gila Bend-Santa Rosa 230kV, Loop Silver King into the Cholla-Saguaro 500kV line.

3. Palo Verde-Mobile 500kV, Mobile-Saguaro 500kV, Westwing-SW Valley 345kV, Mobile-SW Valley 500kV, Saguaro-Tucson Area (230kV or 500kV), Mobile-South (345kV or 500kV), Loop Silver King into the Cholla-Saguaro 500kV line. **(DELETED)**

4. Palo Verde-Jojoba 500kV, Jojoba-Mobile 500kV, Mobile-SW Valley 500kV, Mobile-Saguaro 500kV, Saguaro-Tucson Area (500kV or 230kV), Gila Bend-Santa Rosa 230kV, Mobile-Santa Rosa 230kV, Westwing-SW Valley 345kV, Mobile-South (345kV or 500kV), Loop Silver King into the Cholla-Saguaro 500kV line.

5. Palo Verde-Mobile 500kV, Palo Verde-SW Valley 500kV, Westwing-Mobile (345kV or 500kV), Saguaro-Mobile 500kv, Saguaro-Tucson Area (230kV or 500kV), Mobile-South (345kV or 500kV), Mobile-Hayden 500kV, Loop Hayden into the Cholla-Saguaro 500kV line, Loop Silver King into the Cholla-Saguaro 500kV line, Saguaro-Tortolita 500kV.

6. Mobile-Hayden 500kV, Mobile-Saguaro 500kV, Loop Hayden into the Cholla-Saguaro 500kV line, Loop Silver King into the Cholla-Saguaro 500kV line, Browning-RS19 (230kV or 500kV), RS19-Hayden (230kV or 500kV), Hayden-Coolidge 230kV.

6-1. Mobile-Hayden 500kV, Mobile-Saguaro 500kV, Loop Hayden into the Cholla-Saguaro 500kV line, Loop Silver King into the Cholla-Saguaro 500kV line, Browning-RS19 (230kV or 500kV), RS19-Hayden (230kV or 500kV), Hayden-Browning 230kV, Hayden-Silver King 230kV.

6-2. Mobile-Hayden 500kV, Mobile-Saguaro 500kV, Loop Hayden into the Cholla-Saguaro 500kV line, Loop Silver King into the Cholla-Saguaro 500kV line, Browning-RS19 (230kV or 500kV), RS19-Hayden (230kV or 500kV), Loop Queen Valley into the Browning Silver King 500kV line, Browning-Queen Valley 230kV, Silver King Queen Valley 230kV, Hayden-Queen Valley 230kV.

6-3. Mobile-Hayden 500kV, Mobile-Saguaro 500kV, Loop Hayden into the Cholla-Saguaro 500kV line, Loop Silver King into the Cholla-Saguaro 500kV line, Rogers-Browning 230kV, Browning-RS19 230kV, Hayden-RS19 230kV, RS19-Coolidge 230kV.

6-4. Mobile-Hayden 500kV, Mobile-Saguaro 500kV, Loop Hayden into the Cholla-Saguaro 500kV line, Loop Silver King into the Cholla-Saguaro 500kV line, Rogers-Browning 230kV, Browning-RS19 230kV, Hayden-RS19 230kV, RS19-Coolidge 230kV, Loop Queen Valley into the Browning Silver King 500kV line, Browning-Queen Valley 230kV, Silver King Queen Valley 230kV, Hayden-Queen Valley 230kV.

7. Mobile-Saguaro 500kV, Loop Hayden into the Cholla-Saguaro 500kV line, Loop Silver King into the Cholla-Saguaro 500kV line, Rogers-Browning 230kV, Browning-RS19 230kV, Queen Valley-Mobile 500kV, Loop Queen Valley into the Browning Silver King 500kV line, Queen Valley-RS19 230kV, Browning-Queen Valley 230kV

8. Mobile-Saguaro 500kV, Loop Hayden into the Cholla-Saguaro 500kV line, Loop Silver King into the Cholla-Saguaro 500kV line, Rogers-Browning 230kV, Browning-RS19 230kV,RS19-Florence 230kV,Coolidge-Florence 230kV, Florence-Hayden 230kV, Loop Queen Valley into the Browning Silver King 500kV line, Browning-Queen Valley 230kV, Silver King Queen Valley 230kV, Florence-Queen Valley 230kV.

Attachment 1

Central Arizona Transmission Study (CATS)

Phase I
STUDY PLAN

1. **Introduction**

Over the last ten years Arizona has seen significant increases in business and residential growth. While future projections suggest that growth may slow, Arizona's electric utility industry continues a breakneck pace to keep up with existing and future growth expectations. At the same time, resource developers vie for opportunities to site and build new generation to access market opportunities in the Palo Verde area. Virtually all Arizona utilities are looking for opportunities to either maximize their existing transmission investments through increased transmission utilization or to build new transmission to serve their customer's needs.

Presently, the central Arizona region between the Phoenix Valley, Palo Verde, and Tucson is attracting the most attention. The Central Arizona Transmission Study (CATS) is proposed to provide an opportunity for Arizona utilities to jointly work with each other to address their common transmission needs.

This document proposes a scope of study to assess proposed transmission development in the central Arizona region.

2. **Objective**

Assess the impact of proposed central Arizona transmission opportunities on the interconnected Arizona transmission system.

3. **Scope**

The scope of the study is described below.

Study Time Frame – A 2005/2006 to 2012-study time frame is proposed. This time frame can be adjusted based on availability of base cases either within the WSCC Data Bank or through a study participant. The study will be broken down into two phases: Phase 1 will concentrate on the 2005/2006 time frame were phase 2 will concentrate on the 2012 time frame.

Generation Sites – The Generation sites have group into three (3) separate generation groups. A complete list of new Generation modeled in the CATs base case is listed in Appendix A.

A. Generation at or near the Palo Verde Site

B. Generation at or near Saguaro and Coolidge area

1. Saguaro Generation
2. Coolidge Generation

C. Generation at or near Tucson, Springerville and Mexico

1. Tucson Generation
2. Springerville Generation
3. Mexico Generation

Load Areas – The following major load centers will be studied.

A. Phoenix Area: APS/SRP valley load on a 45%/55% split.

B. Tucson Area Load

C. Southern Arizona Area (Can include deliveries to Mexico)

D. Southern California

Phoenix Imports - The following imports into Phoenix will be studied.

A. North to South

B. South to North

C. Deliveries to California

Sensitivities:

A. North to South with Heavy deliveries to California

B. North to South with Light deliveries to California

C. South to North with Heavy deliveries to California

D. South to North with Light deliveries to California

9. Mobile-Coolidge 500kV, Mobile-Saguaro 500kV, Loop Hayden into the Cholla-Saguaro 500kV line, Loop Silver King into the Cholla-Saguaro 500kV line, Rogers-Browning 230kV, Browning-RS19 230kV, Hayden-Coolidge 500kV, Loop Queen Valley into the Browning Silver King 500kV line, Browning-Queen Valley 230kV, Queen Valley-Coolidge 230kV.

Study Matrix:

A study-matrix has been developed to define what Generation/Load/Alternative combinations will be studied. The Matrix defines the Generation source, the load center, and the alternatives, which will be studied for various Generation/Load scenarios. The Study Matrix is located in Appendix B.

Base Cases – Base cases used for this study will come from either the WSCC Data Bank or from the study participants and will be in GE PSLF format. The study participants will all take an active role in the selection and development of these cases to represent the study period being evaluated. Since the study will be concentrating on the Central Arizona area of the WSCC system. It has been recommended that a reduced version of the chosen WSCC base case should be used. The WSCC 2002 Light Summer base case has been selected for development for this study. The load will be grown and the facilities added to represent the Central Arizona area for the 2005 summer peak. Load will be grown to 90% of the 2005 summer peak projected load.

Arizona is predominately a summer peaking system and, as such, represents the period of time when Arizona's transmission system is under the most stress. The need to evaluate other seasons can be assessed at any time.

Analysis Requirements – Study analysis for the first phase of this study will include power flow only, using the WSCC standard GE PSLF program to facilitate the communication of information between the study participants. The need to perform short circuit and Stability analysis will be assessed on a case-by-case basis.

Study Guidelines/Criteria - Study guidelines and criteria will be based on WSCC Reliability Criteria and individual utility criteria, where applicable. All study participants will be required to provide system representation and rating information for their facilities.

Methodology – It is recognized that developing base cases beyond six to seven years has become much more difficult to manage over the last several years. It is suggested that studies be performed over two time periods, short term and long term. The short-term analysis will be the 2005/06 time frames and will focus on assessing the system performance and the system impact of the proposed transmission alternatives on the existing Arizona transmission system. It is expected that the majority of study time will be spent in this time frame. The long-term analysis will be based on the short-term results and will focus on system performance to help facilitate the development of an "ultimate" transmission configuration to meet the needs of all the study participants.

Study Schedule

A. Phase I

a. Develop short-term transmission alternatives.
b. Select and develop base cases.
c. Develop Study Matrix
d. Perform power flow analysis and Asses system performance.
e. Present results to the Steering Committee
f. Perform sensitivity studies
g. Prepare draft report.
h. Finalize report.

B. Phase II

a. Develop long-term transmission alternatives.
b. Select and develop base cases.
c. Develop Study Matrix
d. Perform power flow analysis and Asses system performance.
e. Present results to the Steering Committee
f. Perform sensitivity studies
g. Prepare draft report.
i. Finalize report.

APPENDIX A

Table of New Generation

GENERATION	BUS	PGEN	PMAX	QMIN	QMAX
Desert Basin	14501 DBG-CT1	165	175	35.5	90
	14502 DBG-CT2	165	175	36.1	90
	14503 DBG-ST1	180	190	39.6	58
Gila River	91001 GILRVCT1	170	540	-300	300
	91002 GILRVCT2	170	540	-300	300
	91003 GILRVST1	180	540	-300	300
	91004 GR-CT2-1	170	540	-300	300
	91005 GR-CT2-2	170	540	-300	300
	91006 GR-CT3-1	170	540	-300	300
	91007 GR-CT3-2	170	540	-300	300
	91008 GR-CT4-1	170	540	-300	300
	91009 GR-CT4-2	170	540	-300	300
	91010 GR-ST2-1	180	540	-300	300
	91011 GR-ST3-1	180	540	-300	300
	91012 GR-ST4-1	180	540	-300	300
Red Hawk	81001 RDHWKCT1	170	540	-300	300
	81002 RDHWKCT2	170	540	-300	300
	81003 RDHWKST1	180	540	-300	300
	81004 RH_CT2-1	170	540	-300	300
	81005 RH_CT2-2	170	540	-300	300
	81006 RH_CT3-1	170	540	-300	300
	81007 RH_CT3-2	170	540	-300	300
	81008 RH_CT4-1	170	540	-300	300
	81009 RH_CT4-2	170	540	-300	300
	81010 RH_ST2-1	180	540	-300	300
	81011 RH_ST3-1	180	540	-300	300
	81012 RH_ST4-1	180	540	-300	300
Kyrene Expansion	15918 KYRPGEN1	250	250	-68	70
Santan Expansion	15926 SANPGEN1	240	240	-68	70
	15927 SANPGEN1	162	162	-100	120
	15927 SANPGEN2	162	162	-100	120
	15927 SANPGEN3	162	162	-100	120

APPENDIX A
(CONTINUED)

Table of New Generation

GENERATION	BUS	PGEN	PMAX	QMIN	QMAX
Vail	16517 VAILCT#1	130	130	-15	57
	16518 VAILCT#2	500	500	-300	300
West Phoenix	14966 WPGEN1	155	175	-10	90
	14967 WPGEN2	155	175	-10	90
	14968 WPGEN3	155	175	-10	90
	14958 WPHXNCC	69	125	-35	64
South Point	19317 SOPOINT1	50	170	-52	77
	19318 SOPOINT2	100	175	55	82
	19319 SOPOINT3	100	175	-55	82
Griffith	19311 GRIFFTH1	50	214	-57	84
	19312 GRIFFTH2	100	214	-57	84
	19313 GRIFFTH3	100	214	-57	84
Sundance	19410 SUNDANCE1	0	250	-82	121
	19410 SUNDANCE2	0	250	-82	121
	19410 SUNDANCE3	0	250	-82	121

APPENDIX B

Central Arizona Transmission Study Matrix

Objective	Transmission Alternative	Generation Area	Load Area	Responsible Party
Schedule New Generation from Palo- Verde Area into the Phoenix Area	1,2,4,5	Palo Verde Area Generation (Group A. GEN)	Phoenix Area	SRP/APS
Schedule New Generation from Palo Verde Area into the Tucson Area	1,2,4,5	Palo Verde Area Generation (Group A. GEN)	Tucson Area	SRP/APS
Schedule new Generation from Palo Verde Area into the Tucson and Phoenix Area	1,2,4,5	Palo Verde Area Generation (Group A. GEN)	Phoenix and Tucson Area	SRP/APS
Schedule new Generation from Palo Verde Area into the Southern California Area	1,2,4,5	Palo Verde Area Generation (Group A. GEN)	Southern California	SRP/APS
Schedule new Generation from Saguaro Area into the Phoenix Area	1,2,4,5	Saguaro Area Generation (Group B1. Gen.)	Phoenix Area	WAPA
Schedule New Generation from Saguaro Area into the Tucson Area	1,2,4,5	Saguaro Area Generation (Group B1. Gen.)	Tucson Area	WAPA

APPENDIX B
(CONTINUED)
Central Arizona Transmission Study Matrix

Objective	Transmission Alternative	Generation Area	Load Area	Responsible Party
Schedule new Generation from Saguaro Area into the Tucson and Phoenix Area	1,2,4,5	Saguaro Area Generation (Group B1. Gen.)	Phoenix and Tucson Area	WAPA
Schedule new Generation from Saguaro Area into the Southern California Area	1,2,4,5	Saguaro Area Generation (Group B1. Gen.)	Southern California	WAPA
Schedule New Generation from Coolidge Area into the Phoenix Area	1,2,4,5	Coolidge Area Generation (Group B2. GEN)	Phoenix Area	WAPA
Schedule New Generation from Coolidge Area into the Tucson Area	1,2,4,5	Coolidge Area Generation (Group B2. GEN)	Tucson Area	WAPA
Schedule new Generation from Coolidge Area into the Tucson and Phoenix Area	1,2,4,5	Coolidge Area Generation (Group B2. GEN)	Phoenix and Tucson Area	WAPA
Schedule new Generation from Coolidge Area into the Southern California Area	1,2,4,5	Coolidge Area Generation (Group B2. GEN)	Southern California	WAPA
Schedule new Generation from Tucson Area into the Phoenix Area	1,2,4,5	Tucson Area Generation (Group C1. Gen.)	Phoenix Area	TEP

APPENDIX B
(CONTINUED)
Central Arizona Transmission Study Matrix

Objective	Transmission Alternative	Generation Area	Load Area	Responsible Party
Schedule New Generation from Tucson Area into the Tucson Area	1,2,4,5	Tucson Area Generation (Group C1. Gen.)	Tucson Area	TEP
Schedule new Generation from Tucson Area into the Tucson and Phoenix Area	1,2,4,5	Tucson Area Generation (Group C1. Gen.)	Phoenix and Tucson Area	TEP
Schedule new Generation from Tucson Area into the Southern California Area	1,2,4,5	Tucson Area Generation (Group C1. Gen.)	Southern California	TEP
Schedule New Generation from Springerville Area into the Phoenix Area	1,2,4,5	Springerville Area Generation (Group C2. GEN)	Phoenix Area	TEP
Schedule New Generation from Springerville Area into the Tucson Area	1,2,4,5	Springerville Area Generation (Group C2. GEN)	Tucson Area	TEP
Schedule new Generation from Springerville Area into the Tucson and Phoenix Area	1,2,4,5	Springerville Area Generation (Group C2. GEN)	Phoenix and Tucson Area	TEP

APPENDIX B
(CONTINUED)
Central Arizona Transmission Study Matrix

Objective	Transmission Alternative	Generation Area	Load Area	Responsible Party
Schedule new Generation from Springerville Area into the Southern California Area	1,2,4,5	Springerville Area Generation (Group C2. GEN)	Southern California	TEP
Schedule new Generation from Mexico Area into the Phoenix Area	1,2,4,5	Mexico Area Generation (Group C3. GEN)	Phoenix Area	TEP
Schedule New Generation from Mexico Area into the Tucson Area	1,2,4,5	Mexico Area Generation (Group C3. GEN)	Tucson Area	TEP
Schedule new Generation from Mexico Area into the Tucson and Phoenix Area	1,2,4,5	Mexico Area Generation (Group C3. GEN)	Phoenix and Tucson Area	TEP
Schedule new Generation from Mexico Area into the Southern California Area	1,2,4,5	Mexico Area Generation (Group C3. GEN)	Southern California	TEP

Central Arizona Transmission Study

(CATS)

Phase II

1. Introduction

Phase I of the CATS study focused on assessing the system performance and the system impact of the several proposed transmission alternatives on the existing Arizona transmission system. Phase I identified transmission alternatives which warranted further study, based on their performance. Phase II will focus on the results of Phase I and study these transmission alternatives to facilitate the development of a transmission configuration which will meet the needs of all the study participants.

2. Objective

Assess the impact of the transmission Alternatives Identified in Phase I and develop a transmission configuration which will meet the needs of all the study participants.

3. Scope

The scope of the study is described below.

Study Time Frame – A 2005/2006 to 2012-study time frame is proposed. This time frame can be adjusted based on availability of base cases either within the WSCC Data Bank or through a study participant.

Generation Sites – The Generation sites have been grouped into three (3) separate generation groups. A complete list of new Generation modeled in the CATs base case is listed in Appendix A.

A. Generation at or near the Palo Verde Site

B. Generation at or near Saguaro and Coolidge area

C. Generation at or near Tucson, Springerville and Mexico

Load Areas – The following major load centers will be studied.

A. Phoenix Area: APS/SRP valley load on a 45%/55% split.

B. Central Arizona

C. Tucson Area Load

D. Southern Arizona Area (This will include 1000MW of deliveries to Mexico)

E. Southern California

Phoenix Imports - The following imports into Phoenix will be studied.

A. North to South

B. South to North

C. Deliveries to California

Transmission Alternatives Phase II:

Base Case: Alternatives

1. Palo Verde To Gila Bend 500kV Line
2. Palo Verde To Jojoba 500kV Line
3. Jojoba To Mobile 500kV Line
4. Watermelon to Mobile 500kV Line
5. Mobile to South-East-Station 500kV Line
6. Mobile To Saguaro 500kV Line
7. Loop the Silver King Browning 500kV Line into the South-East-Station.
8. South-East-Station to Winchester 500kV Line
9. Saguaro to South 500kV or 345kV Line
10. Vail to South 345kV Line
11. Loop the Vail to Greenlee 345kV Line into Winchester

TEP/AEPCO Alternatives

1. TEP/AEPCO_ ALT_1: Saguaro to Winchester 500kV Line.
2. TEP/AEPCO_ALT_2: 2nd Saguaro to South 500kV Line.
3. TEP/AEPCO_ALT_3: Saquaro to Winchester 500kV Line.

SRP Alternatives

1. SRP_ALT_1: Loop the Cholla to Saquaro 500kV Line into the South-East-Station.
2. SRP_ALT_2: Loop the Cholla to Saquaro 500kV Line into Silver King.
3. SRP_ALT_3: Loop the Cholla to Saquaro 500kV Line into Silver King and into the South-East-Station.

APS Alternatives

1. APS_ALT_1: 2nd Jojoba to Mobile 500kV Line.

WAPA Alternatives

1. WAPA_ALT_1: Add a Mobile to SW Valley 500kV Line, add a SW Valley to Coolidge 500kV, add a Liberty to Signal Peak 500kV Line, add a Signal Peak to Coolidge 500kV, add a Coolidge to Oracle 500kV line, add a Rogers to Browning 500kV line, add a Rogers to Spook Hill 500kV line, add a Spook Hill to Coolidge 500kV line, add a Double Circuit Browning to Coolidge 500kV lines and add a Coolidge to Winchester 500kV line.

2. WAPA_ALT_2: In Addition to WAPA_ALT_1: Add a Double Circuit Rogers to Pinnacle Peak 500kV line, add a Double Circuit Pinnacle Peak to Westwing 500kV line, add a Westwing to Freedom 500kV line and loop-in the Palo Verde to SW Valley 500kV Line into Freedom.

PNM Alternatives

1. PNM_ALT_1: Two 345kV lines from Jojoba to Mobile, two 345kV Lines from Mobile to Saguaro, and two 345kV Lines from Saguaro to South.

Study Matrix:

A study-matrix has been developed to define what Generation/Load/Alternative combinations will be studied. The Matrix defines the Generation source, the load center, and the alternatives, which will be studied for various Generation/Load scenarios. The Study Matrix is located in Appendix B.

Base Cases – Base cases used for this study will come from either the WSCC Data Bank or from the study participants and will be in GE PSLF format. The study participants will all take an active role in the selection and development of these cases to represent the study period being evaluated. Since the study will be concentrating on the Central Arizona area of the WSCC system. It has been recommended that a reduced version of the chosen WSCC base case should be used. The WSCC 2002 Light Summer base case has been selected for development for this study. The load will be grown and the facilities added to represent the Central Arizona area for the 2005 summer peak. Load will be grown to 90% of the 2005 summer peak projected load. All alternatives will be modeled in the case with their status set to the status off position.

Arizona is predominately a summer peaking system and, as such, represents the period of time when Arizona's transmission system is under the most stress. The need to evaluate other seasons can be assessed at any time.

Analysis Requirements – Study analysis for the second phase of this study will include power flow only, using the WSCC standard GE PSLF program to facilitate the communication of information between the study participants. The need to perform short circuit and Stability analysis will be assessed on a case-by-case basis.

Study Guidelines/Criteria - Study guidelines and criteria will be based on WSCC Reliability Criteria and individual utility criteria, where applicable. All study participants will be required to provide system representation and rating information for their facilities.

Methodology – It is recognized that developing base cases beyond six to seven years has become much more difficult to manage over the last several years. It is suggested that studies be performed over two time periods, short term and long term. The short-term analysis will be the 2005/06 time frames and will focus on assessing the system performance and the system impact of the proposed transmission alternatives on the existing Arizona transmission system. It is expected that the majority of study time will be spent in this time frame. The long-term analysis will be based on the short-term results and will focus on system performance to help facilitate the development of an "ultimate" transmission configuration to meet the needs of all the study participants.

APPENDIX A

Table of Generation

GENERATION	BUS	LONG ID	STATUS	PGEN	PMAX	QMIN	QMAX
AGUAFR 1	15901		1	66.00	113.00	-9.00	64.00
AGUAFR 2	15902		1	66.00	113.00	-9.00	64.00
AGUAFR 3	15903		1	139.63	174.00	-38.00	40.00
AGUAFR 4	15904		0	0.00	72.00	-8.00	37.00
AGUAFR 5	15905		0	0.00	70.00	-10.00	32.00
AGUAFR 6	15906		0	0.00	70.00	-10.00	32.00
APACHCT1	17024		1	10.00	10.00	-5.00	7.00
APACHCT2	17025		1	14.18	20.00	-8.00	9.00
APACHCT3	17026		1	65.00	65.00	-26.00	30.00
APACHCT4	17027		0	0.00	40.00	-25.00	37.50
APACHCT5	17105		0	0.00	180.00	-10.00	90.00
APACHST1	17028		1	71.00	75.00	-30.00	40.00
APACHST2	17029		1	175.00	175.00	-70.00	100.00
APACHST3	17030		1	175.00	175.00	-70.00	100.00
ARL-CT1	15145	PROPOSED	0	0.00	200.00	-65.00	122.30
ARL-CT2	15146	PROPOSED	0	0.00	200.00	-65.00	122.30
ARL-ST1	15147	PROPOSED	0	0.00	320.00	-100.00	197.30
BCG-CT1	19092	PROPOSED	1	84.00	102.00	-32.00	54.00
BCG-CT2	19094	PROPOSED	1	83.00	102.00	-32.00	54.00
BCG-CT3	19096	PROPOSED	1	84.00	102.00	-32.00	54.00
BCG-CT4	19098	PROPOSED	1	83.00	102.00	-32.00	54.00
BOWIE 1	16831	PROPOSED	0	150.00	155.00	-50.00	130.00
BOWIE 2	16832	PROPOSED	0	150.00	155.00	-50.00	130.00

GENERATION	BUS	LONG ID	STATUS	PGEN	PMAX	QMIN	QMAX
BOWIE 3	16833	PROPOSED	0	180.00	230.00	-50.00	230.00
BOWIE 4	16834	PROPOSED	0	150.00	155.00	-50.00	130.00
BOWIE 5	16835	PROPOSED	0	150.00	155.00	-50.00	130.00
BOWIE 6	16836	PROPOSED	0	180.00	230.00	-50.00	230.00
CHOLLA	14900		1	110.00	110.00	-42.00	70.00
CHOLLA2	14901		1	245.00	245.00	-100.00	140.00
CHOLLA3	14902		1	260.00	260.00	-100.00	140.00
CHOLLA4	665327		1	390.00	390.00	-142.00	200.00
COL230G1	19701	PROPOSED	0	150.00	204.00	-89.00	107.00
COL230G2	19702	PROPOSED	0	150.00	192.00	-84.00	101.00
COL230G3	19703	PROPOSED	0	150.00	192.00	-84.00	101.00
COL230G4	19704	PROPOSED	0	150.00	204.00	-89.00	107.00
COL230G5	19705	PROPOSED	0	150.00	192.00	-84.00	101.00
COL500G1	19601	PROPOSED	0	150.00	204.00	-89.00	107.00
COL500G2	19602	PROPOSED	0	150.00	192.00	-84.00	101.00
COL500G3	19603	PROPOSED	0	150.00	192.00	-84.00	101.00
COL500G4	19604	PROPOSED	0	150.00	204.00	-89.00	107.00
COL500G5	19605	PROPOSED	0	150.00	192.00	-84.00	101.00
CORONAD1	15971		1	366.00	366.00	-50.00	190.00
CORONAD2	15972		1	370.00	370.00	-50.00	190.00
DBG-CT1	14501		1	165.00	187.00	-84.00	116.00
DBG-CT2	14502		1	165.00	187.00	-84.00	116.00
DBG-ST1	14503		1	180.00	272.00	-115.00	169.00
DMPCCT#1	16514		1	75.00	75.00	-15.00	57.00
FCNGEN 1	14911		1	170.00	170.00	-60.00	84.00
FCNGEN 2	14912		1	170.00	170.00	-60.00	84.00
FCNGEN 3	14913		1	220.00	220.00	-80.00	112.00

GENERATION	BUS	LONG ID	STATUS	PGEN	PMAX	QMIN	QMAX
FCNGN4CC	14914		1	750.00	750.00	-280.00	395.00
FCNGN5CC	14915		1	750.00	750.00	-280.00	395.00
GATEWAY	16108	CFE	1	-500.00	500.00	-75.00	75.00
GBPP-CT1	79704	PROPOSED	0	117.30	170.30	-35.00	56.80
GBPP-CT2	79705	PROPOSED	0	117.30	170.30	-35.00	56.80
GBPP-CT3	79706	PROPOSED	0	117.30	170.30	-35.00	56.80
GBPP-ST1	79701	PROPOSED	0	390.00	390.00	-142.00	200.00
GILRVCT1	91001	PROPOSED	0	170.00	170.00	-300.00	300.00
GILRVCT2	91003	PROPOSED	0	170.00	170.00	-300.00	300.00
GILRVST1	91004	PROPOSED	0	180.00	180.00	-300.00	300.00
GR_CT2-1	91002	PROPOSED	0	170.00	170.00	-300.00	300.00
GR_CT2-2	91005	PROPOSED	0	170.00	170.00	-300.00	300.00
GR_CT3-1	91007	PROPOSED	0	170.00	170.00	-300.00	300.00
GR_CT3-2	91008	PROPOSED	0	170.00	170.00	-300.00	300.00
GR_CT4-1	91010	PROPOSED	0	170.00	170.00	-300.00	300.00
GR_CT4-2	91011	PROPOSED	0	170.00	170.00	-300.00	300.00
GR_ST2-1	91006	PROPOSED	0	180.00	180.00	-300.00	300.00
GR_ST3-1	91009	PROPOSED	0	180.00	180.00	-300.00	300.00
GR_ST4-1	91012	PROPOSED	0	180.00	180.00	-300.00	300.00
HGC-CT1	15157	PROPOSED	0	0.00	254.00	-110.00	130.00
HGC-CT2	15159	PROPOSED	0	0.00	254.00	-110.00	130.00
HGC-CT3	15161	PROPOSED	0	0.00	254.00	-110.00	130.00
HGC-ST1	15158	PROPOSED	0	0.00	134.00	-58.00	65.50
HGC-ST2	15160	PROPOSED	0	0.00	134.00	-58.00	65.50
HGC-ST3	15162	PROPOSED	0	0.00	134.00	-58.00	65.50
HRSMS123	15931		1	9.50	9.80	1.50	1.50
HRSMS123	15931		1	9.50	9.80	1.50	1.50

GENERATION	BUS	LONG ID	STATUS	PGEN	PMAX	QMIN	QMAX
HRSMS123	15931		1	9.50	9.80	1.50	1.50
HRSMS4	15934		1	95.00	96.00	20.00	20.00
IRVNTCT	16504		1	25.00	30.00	-10.00	15.00
IRVNTCT	16504		1	25.00	30.00	-10.00	15.00
IRVTGE1	16507		1	80.00	81.00	-15.00	80.00
IRVTGE2	16508		1	80.00	81.00	-15.00	80.00
IRVTGE3	16509		1	104.00	104.00	-15.00	70.00
IRVTGE4	16503		1	110.00	156.00	-30.00	110.00
KYRENE 1	15911		0	0.00	34.00	-11.00	22.00
KYRENE 2	15912		0	0.00	72.00	-21.00	50.00
KYRENE 4	15914		0	0.00	57.00	-19.00	27.00
KYRENE 5	15915		0	0.00	51.00	-14.00	29.00
KYRENE 6	15916		0	0.00	50.00	-14.00	29.00
KYRPGEN1	15918		1	250.00	250.00	-68.00	70.00
KYRPGEN2	15919		0	0.00	0.00	0.00	0.00
KYRPGEN2	15919		0	0.00	0.00	0.00	0.00
KYRPGEN2	15919		0	0.00	0.00	0.00	0.00
MES-CT1	15164	PROPOSED	0	0.00	185.00	-61.00	115.00
MES-CT2	15165	PROPOSED	0	0.00	185.00	-61.00	115.00
MES-CT3	15167	PROPOSED	0	0.00	185.00	-61.00	115.00
MES-CT4	15168	PROPOSED	0	0.00	185.00	-61.00	115.00
MES-ST1	15166	PROPOSED	0	0.00	321.00	-100.00	200.00
MES-ST2	15169	PROPOSED	0	0.00	321.00	-100.00	200.00
MRMFLT12	15941		1	9.00	9.00	-1.00	1.00
MRMFLT12	15941		1	41.50	41.50	-15.00	15.00
NAVAJO 1	15981		1	805.00	805.00	-140.00	350.00
NAVAJO 2	15982		1	805.00	805.00	-140.00	350.00

GENERATION	BUS	LONG ID	STATUS	PGEN	PMAX	QMIN	QMAX
NAVAJO 3	15983		1	803.66	805.00	-140.00	350.00
NLOOPCT	16510		1	25.00	30.00	-10.00	15.00
NLOOPCT	16510		1	25.00	30.00	-10.00	15.00
NLOOPCT	16510		0	25.00	30.00	-10.00	15.00
NLOOPCT	16510		0	20.00	20.00	-10.00	10.00
OCOTGT1	14921		1	55.90	55.90	-20.00	33.00
OCOTGT2	14922		1	55.90	55.90	-20.00	33.00
OCOTST1	14925		1	114.90	114.90	-42.00	70.00
OCOTST2	14924		1	114.90	114.90	-42.00	70.00
PALOVRD1	14931		1	1352.00	1352.00	-310.00	710.00
PALOVRD2	14932		1	1352.00	1352.00	-310.00	710.00
PALOVRD3	14933		1	1352.00	1352.00	-310.00	710.00
RDHWKCT1	81001	PROPOSED	1	155.00	170.00	-300.00	300.00
RDHWKCT2	81003	PROPOSED	1	155.00	170.00	-300.00	300.00
RDHWKST1	81004	PROPOSED	1	170.00	180.00	-300.00	300.00
RH_CT2-1	81002	PROPOSED	0	170.00	170.00	-300.00	300.00
RH_CT2-2	81005	PROPOSED	0	170.00	170.00	-300.00	300.00
RH_CT3-1	81007	PROPOSED	0	170.00	170.00	-300.00	300.00
RH_CT3-2	81008	PROPOSED	0	170.00	170.00	-300.00	300.00
RH_CT4-1	81010	PROPOSED	0	170.00	170.00	-300.00	300.00
RH_CT4-2	81011	PROPOSED	0	170.00	170.00	-300.00	300.00
RH_ST2-1	81006	PROPOSED	0	180.00	180.00	-300.00	300.00
RH_ST3-1	81009	PROPOSED	0	180.00	180.00	-300.00	300.00
RH_ST4-1	81012	PROPOSED	0	180.00	180.00	-300.00	300.00
RSVLTGEN	15951		1	34.00	34.00	4.00	4.00
SAG-CT3	79707	PROPOSED	0	90.00	90.00	20.00	20.00
SAG. CT1	14944		1	4.00	54.50	-20.00	33.00

GENERATION	BUS	LONG ID	STATUS	PGEN	PMAX	QMIN	QMAX
SAG. CT2	14943		1	0.00	54.50	-20.00	33.00
SAGUARO1	14941		1	73.40	110.00	-39.00	62.00
SAGUARO2	14942		1	54.40	99.00	-39.00	62.00
SANPGEN1	15926	PROPOSED	1	240.00	240.00	-68.00	70.00
SANPGEN2	15927	PROPOSED	1	162.00	162.00	-100.00	120.00
SANPGEN2	15927	PROPOSED	1	162.00	162.00	-100.00	120.00
SANPGEN2	15927	PROPOSED	1	162.00	162.00	-100.00	120.00
SANTAN 1	15921		1	67.00	76.00	-28.00	70.00
SANTAN 2	15922		1	67.00	74.00	-28.00	70.00
SANTAN 3	15923		0	0.00	80.00	-28.00	70.00
SANTAN 4	15924		1	67.00	77.00	-28.00	70.00
SPG-CT1	80133	PROPOSED	0	162.00	162.00	-10.00	90.00
SPG-CT2	80134	PROPOSED	0	162.00	162.00	-84.00	116.00
SPG-CT3	80137	PROPOSED	0	162.00	162.00	-84.00	116.00
SPG-CT4	80138	PROPOSED	0	162.00	162.00	-84.00	116.00
SPG-ST1	80135	PROPOSED	0	256.00	256.00	-115.00	169.00
SPG-ST2	80139	PROPOSED	0	256.00	256.00	-115.00	169.00
SPR GEN1	16500		1	380.00	380.00	-100.00	100.00
SPR GEN2	16501		1	380.00	380.00	-100.00	100.00
SPR GEN3	16518	PROPOSED	0	380.00	380.00	-100.00	100.00
SPR GEN4	16519	PROPOSED	0	380.00	380.00	-100.00	100.00
STEWMTN	15961		1	13.00	13.00	-5.00	5.00
SUN G1	19411	PROPOSED	0	44.50	60.00	-20.00	30.00
SUN G10	19420	PROPOSED	0	44.50	60.00	-20.00	30.00
SUN G2	19412	PROPOSED	0	44.50	60.00	-20.00	30.00
SUN G3	19413	PROPOSED	0	44.50	60.00	-20.00	30.00
SUN G4	19414	PROPOSED	0	44.50	60.00	-20.00	30.00

GENERATION	BUS	LONG ID	STATUS	PGEN	PMAX	QMIN	QMAX
SUN G5	19415	PROPOSED	0	44.50	60.00	-20.00	30.00
SUN G6	19416	PROPOSED	0	44.50	60.00	-20.00	30.00
SUN G7	19417	PROPOSED	0	44.50	60.00	-20.00	30.00
SUN G8	19418	PROPOSED	0	44.50	60.00	-20.00	30.00
SUN G9	19419	PROPOSED	0	44.50	60.00	-20.00	30.00
SUNARIZ1	19431	PROPOSED	0	0.00	300.00	-98.00	145.00
SUNARIZ2	19432	PROPOSED	0	0.00	160.00	-52.00	77.00
SUNARIZ3	19433	PROPOSED	0	0.00	160.00	-52.00	77.00
TOLT-CT1	16802	PROPOSED	0	150.00	155.00	-50.00	130.00
TOLT-CT2	16803	PROPOSED	0	150.00	155.00	-50.00	130.00
TOLT-CT3	16805	PROPOSED	0	150.00	155.00	-50.00	130.00
TOLT-CT4	16806	PROPOSED	0	150.00	155.00	-50.00	130.00
TOLT-CT5	16808	PROPOSED	0	150.00	155.00	-50.00	130.00
TOLT-CT6	16809	PROPOSED	0	150.00	155.00	-50.00	130.00
TOLT-ST1	16804	PROPOSED	0	300.00	300.00	-100.00	197.30
TOLT-ST2	16807	PROPOSED	0	300.00	300.00	-100.00	197.30
TOLT-ST3	16810	PROPOSED	0	300.00	300.00	-100.00	197.30
VAILCT#1	16517		1	75.00	75.00	-15.00	57.00
VAILCT#2	16520		0	75.00	75.00	-15.00	57.00
WADDEL23	19300		1	7.50	11.50	-3.00	4.00
WADDEL23	19300		1	7.50	11.50	-3.00	4.00
WADDEL67	19301		1	7.50	11.50	-3.00	4.00
WADDEL67	19301		1	7.80	11.50	-3.00	4.00
WINCH 1	16850	PROPOSED	0	160.00	160.00	-25.00	100.00
WINCH 2	16851	PROPOSED	0	160.00	160.00	-25.00	100.00
WINCH 3	16852	PROPOSED	0	180.00	180.00	-40.00	110.00
WPGEN1	14966		1	155.00	175.00	-10.00	90.00

GENERATION	BUS	LONG ID	STATUS	PGEN	PMAX	QMIN	QMAX
WPGEN2	14967		1	155.00	175.00	-10.00	90.00
WPGEN3	14968		1	155.00	175.00	-30.00	90.00
WPHX CC1	14951		1	74.00	85.00	-35.00	64.00
WPHX CC2	14952		1	85.00	85.00	-35.00	64.00
WPHX CC3	14953		1	85.00	85.00	-35.00	64.00
WPHX GT1	14954		0	0.00	0.00	-20.00	33.00
WPHX GT2	14957		0	0.00	0.00	-20.00	33.00
WPHXNCC	14958		1	68.50	125.00	-35.00	64.00
YUCCACT1	14961		0	0.00	19.10	-7.00	12.00
YUCCACT2	14962		0	0.00	19.10	-7.00	12.00
YUCCACT3	14963		0	0.00	55.00	-18.00	32.00
YUCCACT4	14964		0	0.00	54.00	-18.00	32.00
YUCCAGEN	14965		1	75.00	75.00	-32.00	54.00
YUMA EQ.	14406		0	0.00	0.00	-18.00	33.00

CATS PHASE II STUDY STATUS

	Status
A) Develop Phase II Transmission Alternatives	Completed
B) Select and Develop Base Case	Completed
1) Create Power Flow Maps	Completed
C) Develop Study Matrix	Completed
D) Perform Power Flow Analysis and Asses System Performance	In process
E) Present results to the Steering Committee	On going
F) Perform sensitivity studies	To be done
G) Prepare draft report.	To be done
H) Finalize Report.	To be done
I) Expected Completion date in 2002	

GTR 01/23/02

SALT RIVER PROJECT 10 YEAR PLAN

2002 — 2011

APPENDIX 2

Report on the Preliminary Study for the Palo Verde Interconnection

Prepared for the Palo Verde Interconnection
and the Western Arizona Transmission System Task Force
by Salt River Project

March 2, 2001

01-07558 12/01

Report on the Preliminary Study for the Palo Verde Interconnection

Prepared for the

Palo Verde Interconnectors

And

Western Arizona Transmission System Task Force

By

Salt River Project

February 20, 2001

Version (h)

Report on the Preliminary Study for the Palo Verde Interconnection

The Palo Verde Generating Station is located approximately 35 miles southwest of the Phoenix Metropolitan area. It is comprised of three nuclear generating units with a net output of approximately 1,270 MW each. The Palo Verde Transmission System Facilities include the Palo Verde 500 kV Switchyard, the ANPP Valley Transmission System (the Palo Verde-Westwing 500 kV #1 and #2 Transmission Lines, the Palo Verde-Kyrene 500 kV Transmission Line and the Kyrene 500 kV Switchyard), the Palo Verde-Devers 500 kV Transmission Line, and the Palo Verde-North Gila 500 kV Transmission Line. Arizona's EHV transmission system is shown in Figure 1.

Figure 1
Arizona EHV Transmission

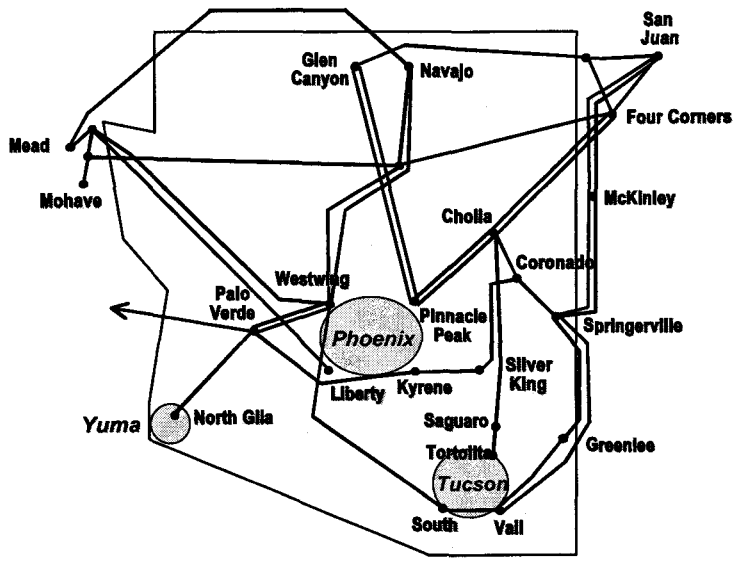

At the time the study was initiated, there were ten interconnections (Interconnectors) being proposed for the Palo Verde 500 kV Switchyard and the Palo Verde Transmission System Facilities. These proposed interconnections and their expected in-service dates are summarized in Table 1 in the order in which their interconnection request was received. While this study addressed the total amount of generation proposed, in reality, all of the generation will not be built at one time. More detail on the planned in-service dates for the individual generation facilities is shown in Exhibit 5.

To accommodate all of the proposed interconnections it was determined that a new 500 kV switchyard, called Hassayampa, would need to be developed adjacent to the existing Palo Verde 500 kV switchyard (Figure 2). Since the summer of 1999 the Interconnectors have worked with the ANPP owners to determine the switchyard arrangement and to develop an interconnection agreement between the Interconnectors and the ANPP owners. In order to achieve an approval from the ANPP owners to interconnect to the Palo Verde Switchyard, technical studies and their subsequent approval by the ANPP owners is required. The Interconnectors subsequently requested Salt River Project (SRP) to perform the required technical analysis on their behalf.

Table 1

Sponsored Project By Company	Name	Facility Type	Capacity (MW)	Interconnection Points	Proposed In-Service Date
PNM/Merchant	-	Line	1,000	PV-Santa Ana (Noroeste)	Summer 2002
APS/SRP	Southwest Valley Project	Line	1,200	PV-Estrella	Summer 2003
PG&E Generating	Harquahala	Generation	1,160	Harquahala-PV	January 2003
APS Generating	Red Hawk	Generation	2,000	Red Hawk – PV	January 2002
NRG Energy Inc.	Yuma West Project	Line	1,000	PV-Yuma West (Baja)	Spring 2002
Sempra Energy	Mesquite	Generation	1,000	Mesquite – PV	June 2003
Duke Energy	Arlington	Generation	1,200	Arlington –PV	June 2002
Power Development Ent.	Gila River	Generation	550-770	Gila Bend Area-PV	3rd Qtr. 2003
Delta Power Company	-	Generation	500	PV-Devers / PV-N. Gila	Unknown
Panda Gila River, LP	Gila Bend	Generation	2,000	Gila Bend Area-PV	June 2002

Figure 2
Palo Verde Nuclear Generating Station Site and 500kV Transmission Lines

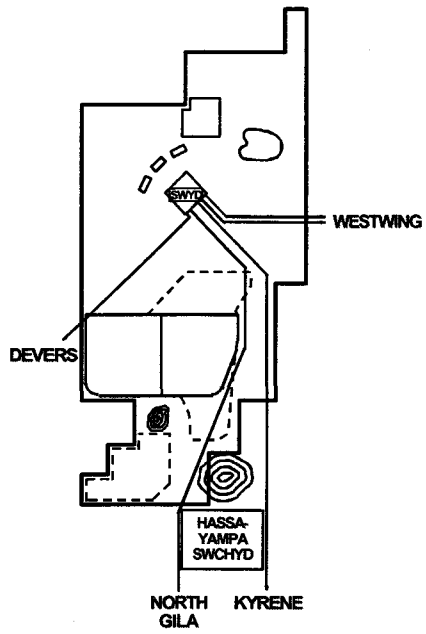

The "Procedures for Requesting an Interconnection with the Palo Verde 500 kV Switchyard or ANPP Valley Transmission System" (Palo Verde Interconnection Procedures) require the successful completion of two levels of technical studies, Preliminary and Detailed, before an interconnection at the Palo Verde Switchyard can be granted. As required by these Procedures, the Interconnectors are required to work with the Western Arizona Transmission System (WATS) Task Force in the performance of all technical studies, including the development of base cases, study plans, as well as the final review and acceptance of all technical study results. Consistent with this requirement, SRP used base cases reviewed and approved by the WATS Task Force on December 8, 1999. Also, as required by the Palo Verde Interconnection Procedures, SRP prepared and submitted, to the WATS Task Force, the "Palo Verde Interconnection Study Plan" for the Preliminary Study of the proposed

interconnections. This study plan outlined, in detail, the study methodology, assumptions, and study criteria, which were used to perform the technical analysis. The WATS Task Force subsequently approved this study plan on December 8, 1999. The Palo Verde Interconnection Study Plan is included in Appendix A of this report. The "Procedures for Requesting an Interconnection with the Palo Verde 500 kV Switchyard or ANPP Valley Transmission System" are included as Appendix 2 of the Study Plan.

The Palo Verde Interconnection Study effort included power flow, stability, post transient voltage stability, and short circuit analysis. While the short circuit work performed focused on the Palo Verde and Westwing Switchyards, the WATS Task Force requested that additional short circuit analysis be performed to assess the impact on the McCullough and N. Gila switchyards. Once this work is completed, this report will be revised to include those results. In addition, an SSR screening effort will be performed at a later date. Once completed, this report will be revised to include those results.

Since the inception of this study effort, four of the original ten Interconnectors eventually elected to not participate in the development of the Hassayampa Switchyard. These Interconnectors are PNM/Merchant, NRG Energy Inc., APS/SRP, and Panda Gila River, LLP. Since this study was initiated over a year ago, a portion of the study was performed with all nine proposed Interconnections modeled in the study data. However, sensitivity studies without these individual projects were also performed. All study results are included in this report.

Finally, it should be noted that the focus of this study was to determine the amount of new generation that could be added in the Palo Verde area and reliably accommodated by the existing or modified transmission system. This study has determined the maximum amount of generation that can be accommodated by the existing and modified transmission systems. A determination by this study of the transmission system's ability to handle more generation than is currently in place at Palo Verde does not imply or confer additional transmission rights. The use of the term schedule in this report is for the purpose of power flow simulation and does not imply contractual rights to the existing transmission system.

Summary of Results

Based on these study objectives, the results of the studies are summarized below. It should be noted that for this report "Existing Transmission" and "Existing Generation" refer to the existing Palo Verde Transmission System Facilities and the existing Palo Verde plant. "New Transmission" and "New Generation" refers to those generation and transmission facilities being proposed for interconnection at the Palo Verde Satellite Switchyard (Hassayampa). The Ultimate System includes all of the interconnections shown in Table 1 with the exception of the Delta Power Company project, which withdrew from the study effort early on in the process. A one line diagram showing the proposed plan of service for the Hassayampa Switchyard project is shown in Figure 3.

FIGURE 3

PALO VERDE INTERCONNECTION STUDY

PROPOSED PLAN OF SERVICE

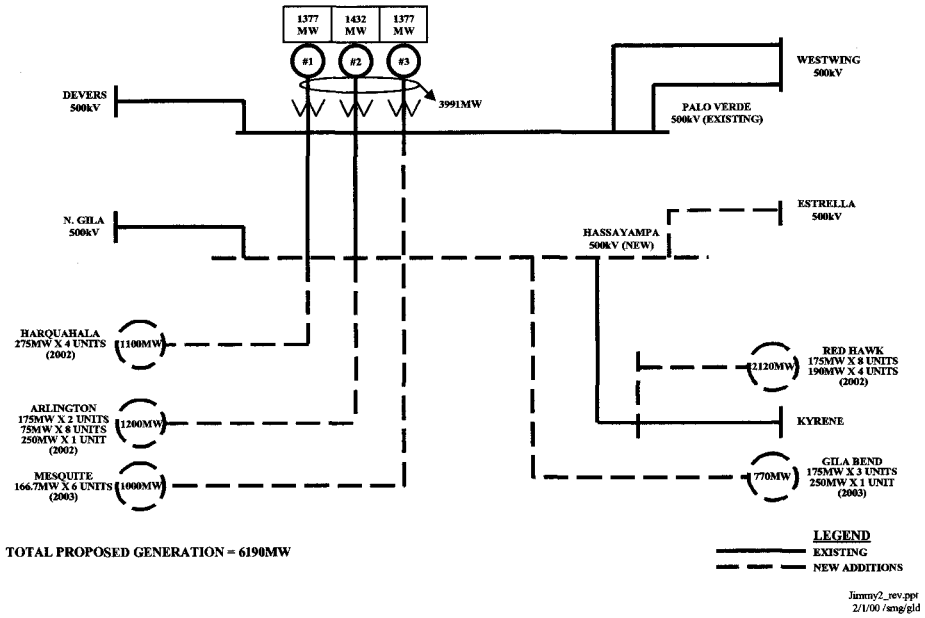

- The ability to schedule New Generation out of Palo Verde varies depending upon "New Transmission" and "New Generation" configurations and actual operating conditions along with new generation scheduling directions etc.
- The existing transmission system can accommodate schedules of 1,800 MW to 3,360 MW of New Generation out of Palo Verde area. This transfer capability is related to the Palo Verde transient voltage dip limitation as found in the most critical double contingency outage situation. Thus, the ability to schedule New Generation is a function of reactive power capability of the New Generation that is in-service.

Installed New Generation Reactive Power Capability Versus Scheduled Generation
(Based on the Existing System Transmission Configuration)

Number of New Units	Installed Generation Capacity		Additional Transmission Capability	
	Reactive Capability MVAR	Maximum Generation MW	Scheduled Generation MW	Transmission System Constraint
37	3,937	6,446	3,360	Thermal/Stability
19	2,259	3,938	2,500	Stability
11	1,300	2,314	1,800	Stability

- Based on the incremental system capability of 3,360 MW, up to 4,850 MW of New Generation can be scheduled out of the Palo Verde area if the Palo Verde-Estrella 500 kV line is added to the Existing System. This limit is based on a thermal limit on the Palo Verde – N. Gila 500 kV line.

- With the addition of the Palo Verde-Estrella 500 kV line, up to 6,050 MW of new generation can be scheduled out of the Palo Verde area if both Palo Verde-Kyrene and Palo Verde-N. Gila 500 kV lines are upgraded and stability mitigation is applied.
- With the Ultimate System (which does not include the Palo Verde – N. Gila and Palo Verde – Kyrene 500 kV lines upgrade), the transmission capability to schedule all of the planned generation (8,192 MW) is constrained by thermal, stability and post-disturbance voltage dip.
  1. The maximum power that can be scheduled out of the Palo Verde vicinity to all areas is about 6,750 MW. This is a stability limit caused by a loss of two Palo Verde-Westwing 500 kV lines.
  2. The maximum power that can be scheduled out of the Palo Verde vicinity to the east and south is 6,500 MW. This is a power flow thermal limit on the Palo Verde-Kyrene 500 kV line under base case conditions.
  3. The maximum power that can be scheduled out of the Palo Verde vicinity to the west and south is 3,835 MW. This is a power flow thermal limit on the Palo Verde-N. Gila 500 kV line for a loss of the Palo Verde-Yuma West 500 kV line.

Conclusions

Based on the results of this study, the following is concluded:

1. For the conditions studied, the capability of the Existing Transmission system is sufficient to accommodate the full output of Existing Generation at Palo Verde. Neither the two Palo Verde-Westwing 500 kV line outage nor the two Palo Verde generators outage would cause Palo Verde plant instability or Malin voltage instability in the northwest.
2. The loss of both Palo Verde–Westwing 500 kV lines is the most severe when the Arizona and Palo Verde transmission systems are stressed. The loss of two Palo Verde units is the most severe when both the Palo Verde system and the COI path are stressed. Both of these disturbances have a significant impact on voltage dip requirements at critical Northwest buses such as Malin.
3. The addition of new generation in the Palo Verde/Hassaympa vicinity will reduce the possibility of a potential voltage collapse problem in the northwest in the event of two Palo Verde generators outage during the simultaneous high EOR/SCIT and COI power transfers.
4. Based on the power flow, stability, and post-transient power flow studies performed, the addition of the proposed New Generation does not adversely impact the Palo Verde plant or the interconnected WSCC system.
5. The ability to transmit power from Palo Verde and Hassayampa is related to EOR stress levels. As a result, scheduling capability will vary depending on where the power is being scheduled:
   - The most power can be scheduled out of Palo Verde/Hassayampa when New Generation is scheduled to the east and west and when the EOR system is not stressed.
   - The least amount of power can be scheduled out of Palo Verde/Hassayampa when New Generation is scheduled to the west when the EOR path is heavily stressed.
6. The ability of the Existing Transmission system to transmit more power from Palo Verde/Hassayampa will vary depending on the number of New Generation units that are in-service. This is due to the voltage support and inertia that the New Generation can provide to the system. For example, the following is based on analysis of the most critical N-2 contingency with a 7 % generation margin (279 MW) added to the Palo Verde nuclear units:
7. Up to 4,850 MW of the New Generation can be accommodated by the transmission system if the Palo Verde - Estrella line is added to the Existing System. If the Palo Verde - North Gila and Palo

Verde - Kyrene lines are upgraded and stability mitigation is applied along with the addition of Palo Verde - Estrella, then up to 6,050 MW of the New Generation can be accommodated.

8. The addition of New Generation and/or New Transmission has a positive impact on the existing Palo Verde Nuclear Plant operation for the following operating conditions:
   - With only one Palo Verde nuclear generator in-service.
   - With maximum Palo Verde bucking or boosting conditions.
9. Post transient analysis shows that adding New Generation at Palo Verde/Hassayampa improves post transient performance at Palo Verde for all critical contingencies.
10. Study results obtained from the WATS approved base cases are slightly more conservative than results obtained from more recent WSCC OTC base cases.
11. The EOR/SCIT transfer capabilities can be increased by upgrading the Palo Verde – N. Gila 500 kV line or by adding a new line to the west:
    - A 400 MW increase in the EOR/SCIT limits if the Palo Verde-N. Gila 500 kV line is upgraded to 1,800 amps (continuous rating and 2400 amps (emergency rating).
    - A 1,000 MW increase in the EOR/SCIT limits with the addition of the Palo Verde-Yuma West 500 kV line.
12. Even with the addition of all New Transmission, transmission capability is constrained by thermal, stability and post-disturbance voltage dip limitation. The following amounts of New Generation can be accommodated with the addition of the New Transmission.
    - The maximum power can be transferred to the east and south is about 6,500 MW, which is limited by the thermal continuous rating of the Palo Verde-Kyrene 500 kV line.
    - The maximum power can be transferred to the west and south is about 3,850 MW, which is limited by the emergency 30-minute rating of the Palo Verde-N. Gila 500 kV line.
    - The maximum power can be transferred to all areas is approximately 6,750 MW, which is limited by the allowable voltage dip at the Malin 500 kV bus in the northwest for the most critical fault at Palo Verde.
13. The stability limit as determined by the most critical fault at Palo Verde is a three-phase fault on the Palo Verde 500 kV bus cleared by loss of both two Palo Verde-Westwing 500 kV lines. This stability limit is a function of generation and the transmission configuration at Palo Verde/Hassayampa. However, it is independent of EOR and SCIT transfer levels.
14. The addition of the proposed New Generation will not exceed the fault duty capability of the 500 kV breakers at Palo Verde.

Based on the studies performed, the Palo Verde Interconnection Study meets the intent of the Preliminary Study requirement outlined in the Palo Verde Interconnection Procedures. However, in the absence of additional transmission facilities or upgrades, the new generation assumed at Palo Verde/Hassayampa would be restricted. Therefore, a curtailment procedure will be developed prior to the interconnection of new generation. Salt River Project, as operating agent for the Palo Verde and Hassayampa Switchyards, is currently preparing these procedures.

Table of Contents

I. Introduction 1
II. Conclusions 2
III. Summary of Study Results 4
IV. Objectives and Scope 8
V. Development of Base Cases 8
VI. Study Model 9
VII. Study Assumptions 13
A. Impact on the Palo Verde Transmission System: 13
B. Impact on the EOR /SCIT Transmission Systems: 14
C. Impact on the Arizona EHV Transmission System: 14
D. Impact on the Palo Verde Plant Low Voltage Performance: 14
E. Impact on the Simultaneous EOR /SCIT /COI Transfer: 14
F. Impact on the Palo Verde Voltage and Reactive Power Control: 14
VIII. Discussion of Study Results 15
A. Ultimate System: 15
1. Impact on the Palo Verde System 15
2. Impact on the EOR/SCIT Transfer Capabilities 19
3. Impact on the Arizona EHV Transmission System 21
4. Impact on the Palo Verde Plant Voltage with Only One Generator In-Service (See TS-Table 4) 22
5. Impact on the Simultaneous EOR/SCIT/COI Transfer Limits (See TS-Table 5) 22
6. Impact on Palo Verde Voltage and Reactive Power Control 23
7. Impact on the Palo Verde Plant Under Maximum Bucking/ Boosting Conditions (See TS-Table 8) 24
B. New Major Transmission Line(s) Initially Out Of Service: 25
1. One New Major Line Initially Out Of Service (See Exhibit 1) 25
2. Two New Major Lines Initially Out Of Service (See Exhibit 2) 26
3. Three New Major Lines Initially Out Of Service (See Exhibit 3) 28
C. Transmission Upgrade /Mitigation With Only One Palo Verde-Estrella 500 kV Line In-Service . 29
1. Palo Verde Transfer Capability 30
2. EOR/SCIT Transfer Capability 30
3. Estimated Costs for Transmission Upgrades 31
D. No Interconnection of Panda Generation Project to Palo Verde (See TS-Table 10A and TS-Table 10B) 31
E. Accuracy of the System Models 32
1. Pre-Projects Benchmark Comparison (See Exhibit 4) 32
2. Post-Projects Stability Results Comparison 33
a. New Generation Projects with Today's Palo Verde Transmission System (See Exhibits 3A & 3B) 34
b.New Generation Projects with Ultimate Palo Verde Transmission System (See TS-Table 1C2M) 34
F. Some Technical Sensitivity Issues 34
1. Impact on the Palo Verde Transfer Capability by Increasing EOR Transfer (See TS-Table 11)34
2. Sensitivity of Adding a 7 % Generation Margin to the PVNGS Units (See TS-Table 12) 35
3. Impact on the Palo Verde Transfer Capability Due to the Double Outage of the

Harquahala and Duke Energy Project lines (See TS-Table 13) 35
IX. Other Significant Observations 37

(A) Tables

1. PF-Table 1A: Power Flow Impact with New Generation Transfer to the East
2. TS-Table 1A: Stability Impact with New Generation Transfer to the East
3. PT-Table 1A: Post-Transient Impact with New Generation Transfer to the East
4. PF-Table 1B: Power Flow Impact with New Generation Transfer to the West
5. PF-Table 1B1: Sensitivity of California Split (40 %/40 %/20 %)
6. PF-Table 1B2: Sensitivity of California Split (40 %/40 %/10 %/10 %)
7. TS- Table 1B: Stability Impact with New Generation Transfer to the West
8. PT-Table 1B: Post-Transient Impact with New Generation Transfer to the West
9. PF-Table 1C1&2: Power Flow Impact with New Generation Transfer to All Areas
10. TS-Table 1C1&2: Stability Impact with New Generation Transfer to All Areas
11. TS-Table 1C2M: Stability Impact with New Generation Transfer to All Areas (Validation of System Model and Base Case Data)
12. TS-Table 1C2S: Stability Impact with New Generation Transfer to All Areas (Sensitivity of COI Flows and/or Readjusting NE/SE Flows)
13. PT-Table 1C1&2: Post-Transient Impact with New Generation Transfer to All Areas
14. PF-Table 2: Power Flow Impact on the EOR Transfer Capability
15. TS-Table 2: Stability Impact on the EOR/SCIT Transfer Capability
16. PT-Table 2: Post-Transient Impact on the EOR/SCIT Transfer Capability
17. PF-Table 3: Power Flow Impact on the Arizona EHV System
18. TS-Table 3: Stability Impact on the Arizona EHV System
19. PT-Table 3: Post-Transient Impact on the Arizona EHV System
20. TS-Table 4: Stability Impact on the Palo Verde Plant with One Unit In-Service
21. TS-Table 5: Stability Impact on the Simultaneous EOR/SCIT/COI Transfers
22. TS-Table 6: Palo Verde Reactive Power Sensitivity Study
23. TS-Table 7: Palo Verde Operating Voltage Sensitivity Study
24. TS-Table 8: Stability Impact on the Palo Verde Plant under Maximum Bucking/Bucking Conditions
25. PF-Table 4: Power Flow Impact on the Palo Verde Transfer Capability (With PV-Estrella and Upgrade of PV-Kyrene & PV-N. Gila. Lines)
26. TS-Table 9: Stability Impact on the Palo Verde Transfer Capability (With PV-Estrella and Upgrade of PV-Kyrene & PV-N. Gila. Lines)
27. PT-Table 4: Post-Transient Impact on the Palo Verde Transfer Capability (With PV-Estrella and Upgrade of PV-Kyrene & PV-N. Gila. Lines)
28. PF-Table 5: Power Flow Impact on the EOR/SCIT Transfer Capability (With PV-Estrella and Upgrade of PV-Kyrene & PV-N. Gila. Lines)
29. TS-Table 10: Stability Impact on the EOR/SCIT Transfer Capability (With PV-Estrella and Upgrade of PV-Kyrene & PV-N. Gila. Lines)
30. PT-Table 5: Post-Transient Impact on the EOR/SCIT Transfer Capability Capability (With PV-Estrella and Upgrade of PV-Kyrene & PV-N. Gila. Lines)
31. TS-Table 10A: Stability Impact without Panda on the Palo Verde Transfer Capability (With PV-Estrella and No Upgrade of PV-Kyrene & PV-N. Gila Lines)

32. TS-Table 10B: Stability Impact without Panda on the Palo Verde Transfer Capability (With PV-Estrella and Upgrade of PV-Kyrene & PV-N. Gila Lines)
33. TS-Table 11: Stability Impact on the Palo Verde Transfer Capability for the Sensitivity of Increasing EOR/SCIT Schedules by Additional 700 MW
34. TS-Table 12: Stability Impact on the Palo Verde Transfer Capability for the Sensitivity of Adding a 7% Generation Margin to PVNGS Units
35. TS-Table 13: Stability Impact on the Palo Verde Transfer Capability due to the Double Outage of the Harquahala and Duke Energy Project Lines

(B) Exhibits

1. Exhibit 1: Palo Verde Transmission Capability with One Line Initially Out Of Service
2. Exhibit 2: Palo Verde Transmission Capability with Two Lines Initially Out Of Service
3. Exhibit 3: Palo Verde Transmission Capability with Three Lines Initially Out Of Service
4. Exhibit 3A: 2002HS PV System Capability (Today's System with New Generation Projects)
5. Exhibit 3B: 2000HS PV System Capability (Today's System with New Generation Projects)
6. Exhibit 4: Comparison of Base Case Models
7. Exhibit 5: Proposed In-service Dates for the New Generation Projects

I. Appendices

Appendix A: Palo Verde Interconnection Study Plan

Appendix B: Generation and Area Interchange Schedules Assumptions For the Pre and Post-Projects Base Cases

Appendix C: Dynamic Models for the New Generation Projects

Appendix D: Power Flow Maps (To Be Provided)

Appendix E: Transient Stability Swing Plots (To Be Provided)

Appendix F: Post-Transient Q-V Analysis

I. Introduction

The Palo Verde Generating Station is located approximately 35 miles southwest of the Phoenix Metropolitan area. It is comprised of three nuclear generating units with a net output of approximately 1270 MW each. The Palo Verde Transmission System Facilities include the Palo Verde 500 kV Switchyard, the ANPP Valley Transmission System (the Palo Verde-Westwing 500 kV #1 and #2 Transmission Lines, the Palo Verde-Kyrene 500 kV Transmission Line and the Kyrene 500 kV Switchyard), the Palo Verde-Devers 500 kV Transmission Line, and the Palo Verde-North Gila 500 kV Transmission Line.

At the time the study was initiated, there were ten interconnections (Interconnectors) being proposed for the Palo Verde 500kV Switchyard and the Palo Verde Transmission System Facilities. These proposed interconnections and their expected in-service dates are summarized in Table 1 in the order in which their interconnection request was received. While this study addressed the total amount of generation proposed, in reality, all of the generation will not be built at one time. More detail on the planned in-service dates for the individual generation facilities is shown in Exhibit 5.

Table 1

Sponsored Project By Company	Name	Facility Type	Capacity (MW)	Interconnection Points	Proposed In-Service Date
PNM/Merchant	-	Line	1,000	PV-Santa Ana (Noroeste)	Summer 2002
APS/SRP	Southwest Valley Project	Line	1,200	PV-Estrella	Summer 2003
PG&E Generating	Harquahala	Generation	1,160	Harquahala-PV	January 2003
APS Generating	Red Hawk	Generation	2,000	Red Hawk – PV	January 2002
NRG Energy Inc.	Yuma West Project	Line	1,000	PV-Yuma West (Baja)	Spring 2002
Sempra Energy	Mesquite	Generation	1,000	Mesquite – PV	June 2003
Duke Energy	Arlington	Generation	1,200	Arlington –PV	June 2002
Power Development Ent.	Gila River	Generation	550-770	Gila Bend Area-PV	3rd Qtr. 2003
Delta Power Company	-	Generation	500	PV-Devers / PV-N. Gila	Unknown
Panda Gila River, LP	Gila Bend	Generation	2,000	Gila Bend Area-PV	June 2002

To accommodate all of the proposed interconnections it was determined that a new 500 kV switchyard, called Hassayampa, would need to be developed adjacent to the existing Palo Verde 500 kV switchyard. Since the summer of 1999 the Interconnectors have worked with the ANPP owners to determine the switchyard arrangement and to develop an interconnection agreement between the Interconnectors and the ANPP owners. In order to achieve an approval from the ANPP owners to interconnect to the Palo Verde Switchyard, technical studies and their subsequent approval by the ANPP owners is required. Guidelines outlining the technical study requirements are included in the "Procedures for Requesting an Interconnection with the Palo Verde 500 kV Switchyard or ANPP Valley Transmission System" included in Appendix 2 of the Study Plan. The Interconnectors subsequently requested Salt River Project (SRP) to perform the required technical analysis on their behalf.

The Palo Verde Interconnection Procedures require the successful completion of two levels of technical studies, Preliminary and Detailed, before an interconnection at the Palo Verde Switchyard can be granted. As required by the Palo Verde Interconnection Procedures, the Interconnectors are required to work with the Western Arizona Transmission System (WATS) Task Force in the performance of all technical studies, including the development of base cases, study plans, as well as

the final review and acceptance of all technical study results. Consistent with this requirement, SRP used base cases reviewed and approved by the WATS Task Force on December 8, 1999. Also, as required by the Palo Verde Interconnection Procedures, SRP prepared and submitted, to the WATS Task Force, the "Palo Verde Interconnection Study Plan" for the Preliminary Study of the proposed interconnections. This study plan outlined, in detail, the study methodology, assumptions, and study criteria, which were used to perform the technical analysis. The WATS Task Force subsequently approved this study plan on December 8, 1999.

The Palo Verde Interconnection Study effort included power flow, stability, post transient voltage stability, and short circuit analysis. An SSR screening effort will be performed at a later date. Once completed, this report will be revised to include those results. In addition, since the inception of this study effort, four of the original ten Interconnectors eventually elected to not participate in the development of the Hassayampa Switchyard. These Interconnectors are PNM/Merchant, NRG Energy Inc., APS/SRP, and Panda Gila River, LLP. Since this study was initiated over a year ago, a portion of the study was performed with all ten proposed Interconnections modeled in the study data. However, sensitivity studies without these individual projects were also performed.

It should be noted that APS/SRP are currently involved in a line siting process for the Palo Verde – Estrella line. Until the siting process is completed, it is unclear if the project will terminate at Hassayampa or Palo Verde. While the Interconnectors recognize this uncertainty they believe that this project will be built, as such it should continue to be modeled in the Interconnection study base cases.

Finally, the focus of this study was to determine the amount of new generation that could be added in the Palo Verde area and reliably accommodated by the existing or modified transmission system. This study has determined the maximum amount of generation that can be accommodated by the existing and modified transmission systems. A determination by this study of the transmission system's ability to handle more generation than is currently in place at Palo Verde does not imply or confer additional transmission rights. The use of the term schedule in this report is for the purpose of power flow simulation and does not imply contractual rights to the existing transmission system.

II. Conclusions

Based on the results of this study, the following is concluded:

1. For the conditions studied, the capability of the Existing Transmission system is sufficient to accommodate the full output of Existing Generation at Palo Verde. Neither the two Palo Verde-Westwing 500 kV line outage nor the two Palo Verde generators outage would cause Palo Verde plant instability or Malin voltage instability in the northwest.
2. The loss of both Palo Verde–Westwing 500 kV lines is the most severe when the Arizona and Palo Verde transmission systems are stressed. The loss of two Palo Verde units is the most severe when both the Palo Verde system and the COI path are stressed. Both of these disturbances have a significant impact on voltage dip requirements at critical Northwest buses such as Malin.
3. The addition of new generation in the Palo Verde/Hassaympa vicinity will reduce the possibility of a potential voltage collapse problem in the northwest in the event of two Palo Verde generators outage during the simultaneous high EOR/SCIT and COI power transfers.
4. Based on the power flow, stability, and post-transient power flow studies performed, the addition of the proposed New Generation does not adversely impact the Palo Verde plant or the interconnected WSCC system.
5. The ability to transmit power from Palo Verde and Hassayampa is related to EOR stress levels. As a result, scheduling capability will vary depending on where the power is being scheduled:

- The most power can be scheduled out of Palo Verde/Hassayampa when New Generation is scheduled to the east and west and when the EOR system is not stressed.
- The least amount of power can be scheduled out of Palo Verde/Hassayampa when New Generation is scheduled to the west when the EOR path is heavily stressed.

6. The ability of the Existing Transmission system to transmit more power from Palo Verde/Hassayampa will vary depending on the number of New Generation units that are in-service. This is due to the voltage support and inertia that the New Generation can provide to the system. For example, the following is based on analysis of the most critical N-2 contingency with a 7 % generation margin (279 MW) added to the Palo Verde nuclear units:
7. Up to 4,850 MW of the New Generation can be accommodated by the transmission system if the Palo Verde - Estrella line is added to the Existing System. If the Palo Verde - North Gila and Palo Verde - Kyrene lines are upgraded and stability mitigation is applied along with the addition of Palo Verde - Estrella, then up to 6,050 MW of the New Generation can be accommodated.
8. The addition of New Generation and/or New Transmission has a positive impact on the existing Palo Verde Nuclear Plant operation for the following operating conditions:
   - With only one Palo Verde nuclear generator in-service.
   - With maximum Palo Verde bucking or boosting conditions.
9. Post transient analysis shows that adding New Generation at Palo Verde/Hassayampa improves post transient performance at Palo Verde for all critical contingencies.
10. Study results obtained from the WATS approved base cases are slightly more conservative than results obtained from more recent WSCC OTC base cases.
11. The EOR/SCIT transfer capabilities can be increased by upgrading the Palo Verde – N. Gila 500 kV line or by adding a new line to the west:
    - A 400 MW increase in the EOR/SCIT limits if the Palo Verde-N. Gila 500 kV line is upgraded to 1,800 amps (continuous rating and 2400 amps (emergency rating).
    - A 1,000 MW increase in the EOR/SCIT limits with the addition of the Palo Verde-Yuma West 500 kV line.
12. Even with the addition of all New Transmission, transmission capability is constrained by thermal, stability and post-disturbance voltage dip limitation. The following amounts of New Generation can be accommodated with the addition of the New Transmission.
    - The maximum power can be transferred to the east and south is about 6,500 MW, which is limited by the thermal continuous rating of the Palo Verde-Kyrene 500 kV line.
    - The maximum power can be transferred to the west and south is about 3,850 MW, which is limited by the emergency 30-minute rating of the Palo Verde-N. Gila 500 kV line.
    - The maximum power can be transferred to all areas is approximately 6,750 MW, which is limited by the allowable voltage dip at the Malin 500 kV bus in the northwest for the most critical fault at Palo Verde.
13. The stability limit as determined by the most critical fault at Palo Verde is a three-phase fault on the Palo Verde 500 kV bus cleared by loss of both two Palo Verde-Westwing 500 kV lines. This stability limit is a function of generation and the transmission configuration at Palo Verde/Hassayampa. However, it is independent of EOR and SCIT transfer levels.
14. The addition of the proposed New Generation will not exceed the fault duty capability of the 500 kV breakers at Palo Verde.

Based on the studies performed, the Palo Verde Interconnection Study meets the intent of the Preliminary Study requirement outlined in the Palo Verde Interconnection Procedures. However, in the

absence of additional transmission facilities or upgrades, the new generation assumed at Palo Verde/Hassayampa will be restricted. Therefore, a curtailment procedure must be developed prior to the interconnection of new generation. Salt River Project, as operating agent for the Palo Verde and Hassayampa Switchyards, is currently preparing these procedures.

III. Summary of Study Results

The following tables summarize the significant study results

Table 2
Palo Verde Interconnection Study
Summary of Results

System Test Scenario		System Configuration	Palo Verde Generation	New Generation	Constraint Type	Constraint Location	Remarks
Palo Verde Transmission System			**(MW)**	**(MW)**			
Scenario A (With 3 New Lines) (Schedules East & South)	(1)	Ultimate	3991	6500	Power Flow	Panda-Kyrene	Continuous rating for N-0
Scenario B (With 3 New Lines) (Schedules West & South)	(2)	Ultimate	3991	3835	Power Flow	PV-N. Gila	Emergency rating for N-1 PV-Yuma West Outage
Scenario C (With 3 New Lines) (Schedules East, West & South)	(3)	Ultimate	3991	6750	Stability	Northwest	PV-WWG N-2 - Marginally stable Collapse in NW @ NewGen>6750 MW
Scenario D (With 1 New PV-Estrella Line) PV-Mexico & PV-Yuma West OOS		PV-Estrella	3991	4850	Power Flow	PV-N. Gila Panda-Kyrene	Continuous rating for N-0
Impact on SCIT/EOR							
		Ultimate	3991	4300	Power Flow	PV-N. Gila	Emergency rating for N-1 PV-Yuma West Outage
Impact on Arizonal EHV System							
		Ultimate	3991	6400	Power Flow Post-Transient	Panda-Kyrene Kyrene 230	Continuous rating for N-0 Allowable voltage deviation limit for N-2 of Panda-KY & PV-Estrella Trip 200 MW of Load in Phoenix
Impact on Simultaneous SCIT/EOR/COI							
		Ultimate	3991	4300	Stability	Northwest	Allowable voltage deviation limit for 2 PV gen erators outage
Palo Verde Plant Tests							
One Generator In-service		Ultimate	1467	6750	None	None	Meets all applicable criteria
525kV Voltage Sensitivity		Ultimate	3991	6550	Stability	Northwest	PV-WWG N-2, Marginally stable Collapse in NW at NewGen >6550 MW
Var Interchange Sensitivity		Ultimate	3991	6750	Stability	Northwest	PV-WWG N-2, Marginally stable Collapse in NW at NewGen >6750 MW
Maximum PV Buck/Boost	(4)	W/Red Hawk	4283	1122	None	None	Meets all applicable criteria
Preliminary Short Circuit							
		Ultimate	3991	8190	None	None	56,500 amps (PV breaker ratings are 63,000 amps)

Notes
The ultimate system includes 3 new lines: PV-Mexico, PV-Yuma West and PV-Estrella 500 KV lines
(1) Schedules East & South = Arizona, New Mexico, Colorado, Utah, & Mexico
(2) Schedules West & South = California & Mexico
(3) Schedules East, West, & South = Arizona, New Mexico, Colorado, Utah, California, & Mexico
(4) Addition of only Red Hawk Generation Project to the Existing Palo Verde System is being studied.

gld/jch 2/20/01
Summary Table Rev5.xls

Table 3
Palo Verde Interconnection Study
Summary of Lines Upgrade/Mitigation And Sensitivity Study Results

System Test Scenario	Palo Verde Generation (MW)	New Generation (MW)	Mitigation RAS	Constraint Type	Constraint Location	Remarks
(A) With PV-Estrella & Upgrade						
Impact on PV System						
No Line Upgrade/Mitigarion						
Power Flow Test	3991	4850	None	N-0	PV-N.Gila	Continuous rating for N-0
Lines Upgrade & Mitigation						
Power Flow Test	3991	6050	Upgrade PV-KYR	N-1	PV-Devers	Emergency rating for N-1 of PV-Yuma West
			& PV-N.G Lines	N-1	PV-WWG	Emergency rating for N-1 of One PV-WWG
Stability Test			Trip 1200 MW Gen	N-2	Northwest	PV-WWG N-2 - Marginally stable
	EOR Flow (MW)	**SCIT Flow (MW)**	**New Generation (MW)**			
Impact on SCIT/EOR						
Power Flow Test	6973	14844	6050	N-1	PV-Devers	Emergency rating for N-1 of PV-Yuma West
Stability Test	(+397)	(+401)		N-1	None	No Problem

Stability Test Scenario	Palo Verde Generation (MW)	New Generation (MW)	Mitigation RAS (MW)	Constraint Type	Constraint Location	Remarks
(B) System Model Sensitivity						
Ultimate System						
2002 HS Model	3991	6750	None	N-2 Stability	Northwest	PV-WWG N-2, Marginally stable
2000 HS Model	3991	6950	None	N-2 Stability	Northwest	PV-WWG N-2, Marginally stable
Today's System						
With 37 New Generators						
2002 HS Model	3991	3455	None	N-2 Stability	Northwest	PV-WWG N-2, Marginally stable
2000 HS Model	3991	3455	None	N-2 Stability	PV Plant	PV-WWG N-2, Marginally stable
With 19 New Generators						
2002 HS Model	3991	2600	None	N-2 Stability	Northwest	PV-WWG N-2, Marginally stable
2000 HS Model	3991	2700	None	N-2 Stability	PV Plant	PV-WWG N-2, Marginally stable
With 11 New Generators						
2002 HS Model	3991	1800	None	N-2 Stability	PV Plant	PV-WWG N-2, Marginally stable
2000 HS Model	3991	2000	None	N-2 Stability	PV Plant	PV-WWG N-2, Marginally stable

gld/jch 2/20/01
Summary Table Rev5.xls

Table 4
Palo Verde Interconnection Study
Summary of Sensitivity Study Results

System Test Scenario	Palo Verde Generation (MW)	New Generation (MW)	Mitigation RAS	Constraint Type	Constraint Location	Remarks
(C) No Panda Interconnection						
With PV-Estrella and No Line Upgrade						
Panda Interconnection (2002 HS Model)	3991	4850	None	N-2 Stability	Northwest	PV-WWG N-2, Marginally stable
No Panda Interconnection (2002 HS Model)	3991	4725	None	N-2 Stability	Northwest	PV-WWG N-2, Marginally stable
No Panda Interconnection (2000 HS Model)	3991	4850	None	N-2 Stability	Northwest	PV-WWG N-2, Marginally stable
With PV-Estrella and Line Upgrade						
Panda Interconnection (2002 HS Model)	3991	6050	Trip 1200 MW	N-2 Stability	Northwest	PV-WWG N-2, Marginally stable
No Panda Interconnection (2002 HS Model)	3991	6050	Trip 2200 MW	N-2 Stability	Northwest	PV-WWG N-2, Marginally stable
No Panda Interconnection (2000 HS Model)	3991	6050	Trip 1600 MW	N-2 Stability	Northwest	PV-WWG N-2, Marginally stable

Stability Test Scenario	Palo Verde Generation (MW)	New Generation (MW)	Mitigation RAS	Constraint Type	Constraint Location	Remarks
(D) Adding 7% PVNGS Gen Margin						
Today's System (On 2000HS Model)						
With 37 New Generators						
Added 0 % Margin	3991	3455	None	N-2 Stability	PV Plant	PV-WWG N-2, Marginally stable
Added 7 % Margin	4283	3360	None	N-2 Stability	PV Plant	PV-WWG N-2, Marginally stable
	4283	3455	Trip 117 MW New Gen	N-2 Stability	PV Plant	PV-WWG N-2, Marginally stable
	4283	3455	Add 300MVAR SVC	N-2 Stability	PV Plant	PV-WWG N-2, Marginally stable
With 19 New Generators						
Added 0 % Margin	3991	2700	None	N-2 Stability	PV Plant	PV-WWG N-2, Marginally stable
Added 7 % Margin	4283	2500	None	N-2 Stability	PV Plant	PV-WWG N-2, Marginally stable
	4283	2700	Trip 600 MW New Gen	N-2 Stability	PV Plant	PV-WWG N-2, Marginally stable
	4283	2700	Add 500MVAR SVC	N-2 Stability	PV Plant	PV-WWG N-2, Marginally stable
With 11 New Generators						
Added 0 % Margin	3991	2000	None	N-2 Stability	PV Plant	PV-WWG N-2, Marginally stable
Added 7 % Margin	4283	1800	None	N-2 Stability	PV Plant	PV-WWG N-2, Marginally stable
	4283	2000	Trip 350 MW New Gen	N-2 Stability	PV Plant	PV-WWG N-2, Marginally stable
	4283	2000	Add 500MVAR SVC	N-2 Stability	PV Plant	PV-WWG N-2, Marginally stable

gld/jch 2/20/01
Summary Table Rev5.xls

IV. Objectives and Scope

The objectives of the Palo Verde Interconnection Study are outlined below:

- Evaluate the impact of the proposed Interconnections on the WSCC interconnected system, including the Arizona EHV system, the EOR/SCIT system, the simultaneous EOR/SCIT/COI transfer limits, and specific impact on the Palo Verde Plant
- Identify the maximum amount of New Generation that can be scheduled out of Palo Verde/Hassayampa on the existing ANPP Transmission System Facilities.
- Identify the maximum amount of New Generation that can be scheduled out of Palo Verde/Hassayampa with the proposed transmission interconnections.
- Identify possible system mitigation opportunities to maximize the amount of New Generation that can be scheduled out of Palo Verde/Hassayampa with and without the APS/SRP Palo Verde – Estrella 500 kV line project.

The scope of the Palo Verde Interconnection Study included the following:

1. Power flow analysis for "all lines in-service" (N-0) and single contingency (N-1) system disturbances.
2. Transient stability analysis for single (N-1) and double (N-2) contingencies, and limited multiple (greater than N-2) contingencies involving line crossing and common ROW analyses.
3. Post-transient stability analysis for single (N-1) and double (N-2) contingencies and limited multiple contingencies involving line crossing and common ROW analyses.
4. Short circuit analysis to assess short circuit impact at the Palo Verde 500 kV switchyard and Westwing 230 kV switchyard.

All contingencies identified in the Palo Verde Interconnection Study Plan were assessed in this study effort. The development of the contingency list was based on input received from the WATS members and focused on assessing impact on ANPP facilities as well as the EOR/SCIT paths.

V. Development of Base Cases

The base cases used for this study were developed from the WSCC 99HS025 Operating Transfer Capability (OTC) base case used by all WSCC members to develop WSCC interconnected system path OTCs for the 1999 summer operating season. This base case received extensive WSCC regional wide review by all WSCC members and was subsequently approved by the OTC Policy Group on behalf of the WSCC Board of Trustees. Given its regional acceptance, SRP proposed this base case be used as a seed case for the Palo Verde Interconnection Study effort. As recommended by the WATS Task Force, the 1999HS025 base case was modified to the following 2002 heavy summer base cases. The WATS Task Force subsequently approved these base cases on December 8, 1999. The purpose and description for each of these base cases are listed below

a. WATS2002HS01

This case was not stressed and was used as a foundation case to represent a normal transfer operating condition in the southwest region. The purpose of this case was to establish a power flow and stability benchmark for the existing Palo Verde transmission system.

b. WATS2002HS01M

This power flow case was developed from the WATS2002HS01 base case and represented an N-1 stability studies to assess the system impact of a three-phase fault at the Palo Verde 500 kV bus. This base case was modeled with additional 7 % generation margin for the three Palo Verde generating units.

c. WATS2002HS02

The case was developed from the WATS2002HS01 base case and represented a maximum stressed EOR/SCIT transfer capability scenario. This benchmark case represented a thermal EOR limit and a post-transient SCIT limit.

d. WATS2002HS03

This case was developed from the WATS2002HS01 base case and represented stressed flows from the Palo Verde Nuclear Generating Station to the Phoenix metropolitan area. This case was used to evaluate the impact on the Arizona EHV system.

e. WATS2002HS04M

This case was developed from the WATS2002HS01 base case and represented a single Palo Verde generator in service with 7 % generation margin added. The purpose of this case was to assess low voltage performance and reactive power supply problems at the PVNGS.

VI. Study Model

The model data was provided by each of the proposed transmission and generation interconnectors and incorporated into the post-project base cases. It should be noted that all of the New Generation projects were represented in the post-project base cases. As such, schedules from the New Generation units were divided equally between all of the units. A one-line Diagram of the generation and transmission projects, as they were modeled in the base cases, is shown in Figure 1.

It should be noted that when this study was initiated all of the projects listed below were included in the study models. However, as the study proceeded, the Palo Verde – Yuma West and Palo Verde – Mexico transmission projects and the Panda Gila River Generation project withdrew as participants from the Hassayampa switchyard. As a result, these projects were removed from the existing study models and additional sensitivity studies were performed to update the study results commensurate with participation in the Hassayampa switchyard. The results of all studies that have been performed are documented in this report.

Transmission Projects

Three transmission projects were proposing to interconnect at the Palo Verde/Hassayampa switchyard. All together, these projects represented an approximate transmission capacity of 3,200 MW. They are briefly described below.

A. A new Palo Verde-Yuma West 500 kV line with 50 % line series compensation. The planned transmission capacity was assumed to be 1,000 MW as proposed by NRG Energy Inc.

B. A new Palo Verde-Estrella 500 kV line proposed jointly by both APS and SRP with planned transmission capacity of 1,200 MW.

C. A new Palo Verde-Mexico 500 kV tie with planned capacity of 1,000 MW. This new line was proposed by PNM-Merchant.

Generation Projects

A total of six New Generation projects, representing 8,190 MW generating capacity, are proposing to interconnect with the Hassayampa switchyard. These projects are briefly described below.

A. PG&E Harquahala Generating Project (HGC) was modeled with 4 single-shaft combined cycle units for a net generating capacity of 1,100 MW.

B. Duke Energy's Generating Project (DEM) was modeled with a total of 11 gas turbine units for a net generating capacity of 1,200 MW.

C. Sempra Energy Resources Generating Project (SEM) was modeled with a total of 4 gas turbine and 2 combined cycle units for a net generating capacity of 1,000 MW.

D. APS ' Red Hawk Generating Project (RED) was modeled with a total of 8 gas turbine and 4 combined cycle units for a net generating capacity of 2,120 MW.

E. Panda Gila River Generating Project (PAN) was modeled with a total of 8 combined cycle units and 4 steam units for a net generating capacity of 2,000 MW.

F. Power Development Enterprise Generating Project was modeled with a total of 3 combined cycle units and 1 steam unit for a generating capacity of 770 MW.

Dynamic Simulation Model

Most of the New Generation Projects had provided with the necessary information for the dynamic simulation study. This information was then converted and implemented in the standard forms required by the GE PSLF dynamic simulation program. The detail of this information is included in the Appendix C of this report. The following is a summary list of the dynamic model information associated with each respective generation project:

A. The Harquahala Generating Project

Potential Equipment Supplier	ABB
Generator	Comprehensive data including reactive power capability data was provided.
Exciter	IEEE type ST1 model with the specific parameters same as STANISLS unit.
Governor	The modal structure and parameter values were not fitted into the standard forms. Alternate IEEEG1 model and the typical parameter values were used.
PSS	WSCCST type model and the same parameter values as HELMS unit 1 were suggested for use.

After the study was completed, the PG&E National Energy Group changed their equipment supplier. As a result, new generation data was provided. While this data was not used in the studies it is expected that the dynamic performance will be equal to that included in the study. The new data is tabulated below.

Potential Equipment Supplier	Siemen – Westinghouse
Generator	Comprehensive data including a reactive power capability curve was provided.
Exciter	IEEE type ST1 model with the specific parameters was provided
Governor	The Siemens 501G turbine governor modal structure and parameter values were provided but not fitted into the standard forms. It will be required to implement the new model in the future studies.
PSS	Data was not provided but has been requested. The Hassayampa Interconnection agreement requires that PSS be installed on all generators.

B. The Arlington Generation Project

Potential Equipment Supplier	GE
Generator	Comprehensive data including the estimated Q max and Q min was provided
Exciter	IEEE type ST4B model with the specific parameters for units1 thru unit3, and EXAC2 for unit 4 thru unit 11
Governor	IEEEG1 and the specific parameter values
PSS	PSS2A utilizing speed plus power input was used for unit 1 thru unit 3

C. The Redhawk Generating Project

Potential Equipment Supplier	Unknown
Generator	Comprehensive data including the estimated Q max and Q min was provided
Exciter	IEEE type ST1 model with the specific parameters
Governor	IEEEG1 and the specific parameter values
PSS	WSCCST type model and the specific parameter values

D. The Sempra Generating Project

Potential Equipment Supplier	GE
Generator	Comprehensive data including the reactive power capability curve was provided
Exciter	IEEE type ST4B model with the specific parameters
Governor	The turbine governor modal structure and parameter values were provided but not fitted into the standard forms. It was suggested that the alternate IEEEG1 model and the typical parameter values be used
PSS	Data was not provided but has been requested. The Hassayampa Interconnection agreement requires that PSS be installed on all generators.

E. The Panda Gila River Generating Project

Potential Equipment Supplier	GE
Generator	Comprehensive data including the reactive power capability curve was provided
Exciter	IEEE type ST4B model with the specific parameters
Governor	IEEEG1 type model and the specific parameter values
PSS	PSS2A utilizing speed plus power input was used

F. The Power Development Enterprise Gila Bend Generating Project

Potential Equipment Supplier	Unknown. Typical values were used
Generator	Typical machine data was used
Exciter	IEEE type ST4B model with the specific parameters
Governor	IEEEG1 model and the typical parameter values
PSS	PSS2A model and the typical parameter values

It should be pointed out that the accuracy of dynamic simulation study is dependent on two key factors: having appropriate model structures and having the proper parameters to fit into that modal structure. Throughout this simulation study, the generator and exciter have shown a larger effect than the governor and PSS response in determining the transient stability performance. The critical disturbance conditions simulated showed neither large frequency deviations nor sustained long-term oscillations that would require adequate control from governor and/or PSS. This is a fortunate situation in terms of collecting dynamic model and data for the ever changing generation projects Because, in general, the machine parameter values associated with the generator and exciter are generic and are not expected to vary substantially from one equipment supplier to another.

It is also worth noting that modeling the new combined-cycle plants has a level of complexity far greater than that of the conventional gas turbine models. In particular, modeling the control blocks and response characteristics for these new governors may differ from standard gas turbine models. Unfortunately, standard governor models for these various combined-cycle plants modeled in this study have not yet been developed. To accommodate this lack of model information, the conventional governor models with typical parameter values were considered to provide a fair representation of these new plants and were utilized in this study. While the use of this alternate standard governor model may not be exactly correct, the influence of variable governor response factors will have little impact on the simulation results.

As the Hassayampa Project Interconnectors move forward with their projects, new data will be provided to SRP as it becomes available. SRP will provide this data to WSCC through the existing WSCC base case development procedures.

VII. Study Assumptions

As required by the study plan, the power flow, stability and post-transient analyses of several different system impact scenarios are required. The generation and area interchange schedules assumptions for the pre- and post-projects power flow bases cases are documented in Appendix B. The assumptions for these impact scenarios are described below.

A. Impact on the Palo Verde Transmission System:

Three scheduling scenarios were studied to determine the maximum amount of New Generation that could be scheduled out of Palo Verde/Hassayampa. Power flow, stability and post-transient analyses were performed on these scheduling scenarios which are briefly discussed below.

1. Scenario A

   All proposed New Generation and Transmission was added to the WATS2002HS01 base case. A total of 6500 MW of New Generation (79 % of the maximum capability) was scheduled to the east and south of the PVNGS to create the ULT2002HS1EAST base case. The power schedules were split as follows: 3,350 MW to Arizona, 1,000 MW to Mexico, 650 MW to New Mexico, 500 MW to Colorado, and 1,000 MW to Utah.

   A companion base case (ULT2002HS1EASTM) was developed from the ULT2002HS1EAST base case and represented an additional 7 % generation margin for the three Palo Verde units. This case was used for N-1 stability studies involving a three-phase fault at the Palo Verde 500 kV bus.

2. Scenario B

   All proposed New Generation and transmission was added to the WATS2002HS01 base case. A total of 3,835 MW of New Generation (47 % of the maximum capability) was scheduled to the west and south of the PVNGS to create the ULT2002HS01WEST base case. The power schedules were split as follows: 2,835 MW to California and 1,000 MW to Mexico.

   A companion base case (ULT2002HS01WESTM) was developed from the ULT2002HS02WEST base case and represented an additional 7 % generation margin for the three Palo Verde units. This case was used for N-1 stability studies involving a three-phase fault at the Palo Verde 500 kV bus.

In most of the system studies, power schedules to California were split in a 55 %/30 %/15 % arrangement to SCE/LADWP/SDG&E (case ULT2002HS02WEST). A sensitivity of splitting schedules to California in a 40 %/40 %/20 % arrangement were also evaluated as a sensitivity study (case ULT2002HS03WEST).

3. Scenario C

   All proposed New Generation and transmission was added to the WATS2002HS01 base case. A total of 6,950 MW of New Generation (85 % of total generating capacity) was scheduled to the east, west, and south of the PVNGS to create the ULT2002HS1COMB1 base case. The power schedules were split as follows: 3,100 MW to Arizona, 1,000 MW to Mexico, 1,150 MW to California, 400 MW to New Mexico, 500 MW to Colorado, and 800 MW to Utah.

   A companion base case (ULT2002HS1COMB1M) was developed from the ULT2002HS1COMB1 base case and represented an additional 7 % generation margin for the three Palo Verde units. This case was used for N-1 stability studies involving a three-phase fault at the Palo Verde 500 kV bus.

B. Impact on the EOR /SCIT Transmission Systems:

All proposed New Generation and transmission was added to the WATS2002HS02 base case. A total of 1,000 MW of New Generation was scheduled to southern California (Approximate 30 %/55 %/15 % split to LADWP/SCE/SDG&E) to create the ULT2002HS02 base case. An increase of actual loading of 1,000 MW on the EOR/SCIT transmission paths was attained as a result of this schedule.

C. Impact on the Arizona EHV Transmission System:

All proposed New Generation and transmission was added to the WATS2002HS03 base case. A total of 6,400 MW of new generation (78 % of total generating capacity) was scheduled to the following areas to create the ULT2002HS03 base case: 3,650 MW to Arizona, 1,000 MW to Mexico, 900 MW to Utah, 500 MW to New Mexico and 350 MW to Colorado.

D. Impact on the Palo Verde Plant Low Voltage Performance:

All proposed New Generation and transmission was added to the WATS2002HS04 base case. Three different scheduling scenarios were assessed to determine the impact of possible low voltage problems or deficiency in reactive capability at the Palo Verde Nuclear Generating Station (PVNGS):

1. ULT2002HS04EM: new generation transfer to the east and south of PVNGS.
2. ULT2002HS04WM: new generation transfer to the west and south of PVNGS.
3. ULT2002HS04CM: new generation transfer to all directions out of PVNGS.

E. Impact on the Simultaneous EOR /SCIT /COI Transfer:

The ULT2002HS02 base case was used to assess the simultaneous interaction of the WSCC EOR, SCIT, and COI paths for critical double contingency outages.

F. Impact on the Palo Verde Voltage and Reactive Power Control:

The ULT2002HS-01C2 base case was also used to assess the impact on the Palo Verde Nuclear Generating Station and its associated transmission system for critical double contingency outages.

VIII. Discussion of Study Results

All supporting information to the study results such as power flow maps, transient stability plots, and post-transient Q-V analysis is included in the Appendices C, D and E. The following is a discussion of study results:

A. Ultimate System:

1. Impact on the Palo Verde System

Pre-Projects Benchmark System

a) Power Flow Results (See PF-Table 1A)

For base case conditions, the heaviest loading occurred on the Palo Verde – N. Gila 500kV line where flows reached 85.9 % of the continuous rating line's series capacitors. The worst N-1 contingency was a Palo Verde-Devers 500 kV line that resulted in a loading of 78.4 % of the 30-minute emergency rating of the Palo Verde-North Gila 500 kV line series capacitors. No low system voltages were noted.

b) Transient Stability Results (See TS-Table 1A)

All single, double and multiple contingencies simulated in the pre-project stability studies were stable and well damped. The worst voltage N-1 contingency was a three-phase fault on the Palo 500 kV bus followed by the loss of the Palo Verde-Devers 500 kV line that resulted in a voltage dip of 10.0 % at the Palo Verde 500 kV bus. The worst N-2 contingency was a simultaneous trip of two Palo Verde generators that resulted in voltage dip of 20.0 % at the Malin 500 kV bus.

c) Post-Transient Results (See PT-Table 1A)

For the pre-project benchmark system, three single line outages, one double line outage and one simultaneous outage of two generators at the PVNGS were tested. No significant voltage problems were found and voltage deviations for these critical outages were within the WSCC post-transient 5.0 % voltage deviation criterion. The minimum reactive power margins throughout the transmission system were well above requirements.

Post-Project Ultimate System

The following three transfer operating scenarios were evaluated for the ultimate system:

Scenario A –East and South:

A Total of 6,500 MW of New Generation was scheduled to the East and South in the following manner: 3,350 MW to Arizona, 1,000 MW to Mexico, 1,000 MW to Utah, 650 MW to New Mexico, and 500 MW to Colorado

a) Power Flow Results (See PF-Table 1A)

For base case conditions the heaviest loading occurred n the Palo Verde – Kyrene 500 kV line where flows reached 100.0 % of the continuous rating of the line's series capacitors. The Palo Verde-Kyrene line loaded to 95.9 % of its emergency rating for the N-1 outage of the Palo Verde-Estrella line. The next worst N-1 contingency was a Palo Verde-Yuma 500 kV line that resulted in loading the Palo Verde – N. Gila 500 kV

line's series capacitors to 90.6 % of their 30-minute emergency rating. No severe voltage deviations were found in this operating scenario.

A comparison of the pre-and post-ultimate system study results showed that for the scenario studied, proposed New Generation and transmission did not show any significant power flow impact on the WSCC interconnected system.

b) Transient Stability Results (See TS-Table 1A)

All contingencies simulated for the pre-project case were also checked for the post-project ultimate system for Scenario A. The impacts due to the following two double contingencies were also evaluated.

i. Three-phase fault at the Palo Verde 500 kV bus cleared by the loss of the Palo Verde-Kyrene and the Palo Verde-Estrella 500 kV lines.

ii. Three-phase fault at the Palo Verde 500 kV bus cleared by the loss of the Palo Verde-N. Gila and the Palo Verde-Yuma West 500 kV lines.

All stability results were stable and damped. It should be pointed out that the transient voltage dip at the Palo Verde 500 kV bus for the post-project cases was significantly better than observed for the pre-project cases. As expected, this is due to the reactive power support provided by the New Generation projects. With these projects located electrically close to Palo Verde, the Palo Verde 500 kV bus voltage was able to quickly recover even following the most critical contingency of both Palo Verde-Westwing 500 kV lines. No severe voltage dips were noted. The stability performance levels were within the criteria and were considered to be acceptable. This double contingency was considered to be the worst N-2 contingency identified in this study.

A comparison of the pre and the post-projects ultimate system indicated that there was no adverse impact on the transient stability performance

c) Post-Transient Results (See PT-Table 1A)

The worst N-1 outage was a trip of the Palo Verde-Kyrene 500 kV line resulting in a 5.0 % voltage deviation at the Kyrene 230 kV bus. The reactive power margin was sufficient for all critical single contingency outages.

For the worst N-2 outage, a simultaneous trip of both Palo Verde-Estrella and Panda-Kyrene 500 kV lines could result in a voltage deviation that could exceed 10.0% throughout the Phoenix 230 kV transmission system. This voltage deviation is primarily due to the amount of power that is being imported into the Phoenix area. A remedial action scheme (RAS) of dropping 100 MW load in the Phoenix area was utilized to mitigate this voltage deviation occurrence. As a result, the voltage deviations and reactive power margin requirements met the WSCC criteria.

Additional sensitivity studies to assess the impact on the reactive power margin requirements at Palo Verde were performed. A sensitivity of lowering Palo Verde operating voltage by 3 % to 515 kV (1.03 P.U.) from 530 kV (1.06 P.U.) was evaluated. The results showed that the Palo Verde 500 kV bus reactive margin reduced to 1,387 MVAR from 1,486 MVAR and was considered to be little or no impact on the Palo Verde transmission system.

Scenario B – West and South

A Total of 3,835 MW New Generation was scheduled west and south in the following manner: 2,835 MW to California and 1,000 MW to Mexico

a) Power Flow Results (See PF-Table 1B, PF-Table 1B1 and PF-Table 1B2)

For the post-projects case, the heaviest loading was 100.1 % of the 30-minute emergency rating of the Palo Verde-N. Gila 500 kV line series capacitors for the Palo Verde Yuma West 500 kV line outage. For the base case conditions, the heaviest loading was at 84.3 % of continuous rating of the Palo Verde-Devers 500 kV line series capacitors. The voltage performance is acceptable for this operating scenario.

It should be mentioned that in this scheduling scenario the resultant EOR transfer was at 7,556 MW and was near at the determined limit of 7,576 MW as found in the following section. This case was based on a normal 55 %/30 %/15 % California import split into the SCE/LADWP/SDG&E areas.

A sensitivity of a 40 %/40 %/20 % California import split into the PG&E/SCE/SDG&E areas was also evaluated. Compared to the previous case, the EOR transfer limits were 65 MW less and New Generation schedules were reduced about 50 MW. Another sensitivity of a 40 %/40 %/10 %/10 % California import split into PG&E/SCE/LADWP/SDG&E was also evaluated. The transfer limits were higher than the previous case with an increase of 154 MW in EOR transfer and an addition of 200 MW in New Generation schedule as compared to the previous normal transfer case.

b) Transient Stability Results (See TS-Table 1B)

The stability results indicated all cases were stable and met the criteria. It is worth noting that the most critical case was a simultaneous outage of two Palo Verde generators. This case resulted in a severe voltage dip of 24.0 % at the Malin 500 kV bus, which was within the criteria and was acceptable. The next critical case was a three-phase fault at the Palo Verde 500 kV bus with the simultaneous outage of both Palo Verde-North Gila and Palo Verde-Yuma West 500 kV lines. The case results indicated an acceptable voltage dip of 14.0 % occurred at the Devers 230 kV bus.

For this scheduling scenario the actual EOR and SCIT transfers were at 7,556 MW and 14,276 MW, respectively and are within the EOR/SCIT nomogram limits. As such, no adverse impact on the interconnected system was noted.

c) Post-Transient Results (See PT-Table 1B)

No significant voltage problems were found and voltage deviations for critical outages studied were within the WSCC post-transient voltage deviation criterion. The minimum reactive power margins throughout the transmission system were well above required levels. These results were based on a normal Palo Verde bus operating voltage of 530 kV (1.06 P.U.).

A sensitivity of lowering Palo Verde operating voltage by 3 % to 515 kV (1.03 P.U.) from 530 kV (1.06 P.U.) was evaluated to test the reactive capability reserve at Palo Verde. The results showed that the Palo Verde 500 kV bus reactive margin remained at

approximately 3,000 MVAR primarily due to the New Generation located in the Palo Verde area.

Scenario C1 – East, West, and South

A Total of 6,950 MW New Generation was scheduled to the east, west, and south in the following manner: 3100 MW to Arizona, 1,150 MW to California, 1,000 MW to Mexico, 800 MW to Utah, 400 MW to New Mexico, and 500 MW to Colorado

a) Power Flow Results (See PF-Table 1C1)

For the post-projects case, the heaviest loading was 100.2 % of the continuous rating on the Palo Verde-Kyrene 500 kV line under base case conditions. The Palo Verde- N. Gila line series capacitors were loaded at 100.1 % of their 30-minute emergency ratings for an outage of the Palo Verde-Yuma West 500 kV line. The next worst N-1 contingency was a Palo Verde- N. Gila 500 kV line that resulted in a loading of 96.0 % of the 30-minute emergency rating of the Palo Verde-Yuma West 500 kV line series capacitors. No severe voltage deviations were found in this operating scenario.

It should be mentioned that this case was established for the maximum amount of new generation can be sent out of the Palo Verde Switchyard based only on power flow performance considerations.

b) Transient Stability Results (See TS-Table 1C1)

The stability results indicated that all cases were stable and met the criteria except for a three-phase fault at the Palo Verde 500 kV bus followed by the loss of both Palo Verde – Westwing 500 kV lines. Commensurate with results obtained in the Palo Verde Interconnection Screening Study, this case resulted in a voltage collapse and trip of several generators in the northwest region of the WSCC system. Based in these results, it is necessary to reduce the amount of New Generation scheduled to maintain system stability.

c) Post-Transient Results (See PT-Table 1C1)

The worst N-1 outage was a trip of the Palo Verde-Kyrene 500 kV line that caused a 6% voltage deviation at the Kyrene 230 kV bus. The critical N-2 outage was a simultaneous trip of both Palo Verde-Estrella and Panda-Kyrene 500 kV lines. As indicated by the results from Scenario, this case also required 100 MW of load shedding in Phoenix. This requirement is primarily due to the amount of power being imported into the Phoenix area.

The previous study results were based on a desirable Palo Verde transmission system voltage of 530 kV (1.06 P.U.). A sensitivity of lowering Palo Verde operating voltage by 3 % to 515 kV (1.03 P.U.) from 530 kV (1.06 P.U.) was evaluated for this maximum power transfer to all areas. The results showed that the Palo Verde 500 kV bus reactive margin was reduced to 343 MVAR from 674 MVAR. However, this reactive margin was still higher than the 250 MVAR requirement for N-2 contingency criterion typically applied in the WSCC major 500 kV buses. Therefore, Palo Verde reactive margin levels under desirable or low voltage operating conditions are acceptable and met the study criteria.

Scenario C2 – East, West, and South

A Total of 6,750 MW New Generation was scheduled to the east, west and south in the following manner: 3,100 MW to Arizona, 1,150 MW to California, 1,000 MW to Mexico, 600 MW to Utah, 400 MW to New Mexico and 500 MW to Colorado.

a) Power Flow Results (See PF-Table 1C2)

Stability studies indicated that reducing New Generation scheduled from 6,950 MW to 6,750 MW would yield acceptable stability performance. Power flow analysis on this case showed that all transmissions facilities were loaded below the 100% thermal limits and were less critical. A comparison of the pre-and the post-projects ultimate systems showed no critical impact on the power flow performance

More discussion on the stability study results are described in the next section.

b) Transient Stability Results (See TS-Table 1C2 and TS-Table 1C2S)

All stability cases studied were stable and damped after New Generation schedules were reduced by 200 MW. It should be pointed out that the transient voltage dip at the Palo Verde 500 kV and Malin 500 kV buses were at 13.0 % and 25.0%, respectively for the a simultaneous outage of both Palo Verde-Westwing 500 kV lines. A comparison of the pre and the post-project study results showed comparable system performance.

A sensitivity case of readjusting NE/SE (TOT 2 Path) schedules to avoid inadvertent flows onto the EOR path and to maintain high COI power transfer (4,260 MW) as shown in the Pre-Project benchmark base case was investigated. This case required a reduction of 200 MW in New Generation schedules or a reduction of 569 MW in COI power transfer.

c) Post-Transient Results (See PT-Table 1C2)

The post-transient results indicated no significant problems for all N-1 outage cases.

The critical N-2 outage was a simultaneous trip of both Palo Verde-Estrella and Panda-Kyrene 500 kV lines. This case did not require load shedding in the Phoenix area as identified in earlier studies. The post-transient results showed the voltage deviations and reactive power margin requirements met the WSCC criteria.

The previous study results were based on a desirable Palo Verde transmission system voltage of 530 kV (1.06 P.U.). A sensitivity of reducing Palo Verde operating voltage by 3 % to 515 kV (1.03 P.U.) from 530 kV (1.06 P.U.) was evaluated for the Palo Verde 500 kV bus reactive margin. The results showed that the Palo Verde 500 kV bus reactive margin decreased to about 539 MVAR from 1,117 MVAR. The reduction was considered significant but was still twice higher than the minimum requirement of 250 MVAR for N-2 contingency.

2. Impact on the EOR/SCIT Transfer Capabilities

a) Power Flow Results (See PF-Table 2)

In the pre-projects benchmark the EOR transfer limit was established to be 6,576 MW. This limit was determined by the thermal constraint on the Palo Verde-N. Gila 500 kV line series capacitors that reached the continuous rating of 1,400A under base case conditions. The worst N-1 contingency was a Palo Verde-Devers 500 kV line which

resulted in the Palo Verde – N. Gila 500kV line loading to 92.7% of the 30 minute emergency series capacitor rating (1890A). System voltages were within the acceptable voltage criteria.

For the post-projects ultimate system, the EOR transfer level was increased to 7,576 MW (an increment of 1000 MW) as a result of the new Palo Verde-Yuma West 500 kV line. It was found that bus voltages were acceptable and all transmission facilities were loaded within their continuous ratings under base case conditions. The heaviest loading was on the Palo Verde – Devers 500kV line which reached 87.1 % of the line's series capacitor rating. At the EOR transfer level of 7,576 MW the loading on the Palo Verde-N. Gila line reached 99.8 % of the series capacitors' 30-minute emergency rating of 1,890A for an outage of the new Palo Verde-Yuma West 500 kV line. No large voltage deviations were detected for any critical single outages.

b) Transient Stability Results (See TS-Table 2)

Five single contingency outages were studied to assess transient stability system performance. All five contingencies resulted in stable and well damped results. The expected worst case was a Palo Verde-N. Gila 500 kV line outage with the EOR/SCIT transfers at 6,576MW and 14,443 MW, respectively. The maximum transient voltage dip was 0.91 P.U. at the Devers 230 kV bus.

For the post-project system with the EOR/SCIT transfers at 7,576 MW and 15,444 MW respectively, system performance was assessed for the outage of Palo Verde-Yuma West 500 kV line in addition to the same five outages tested in the pre-project benchmark case. The results showed stable and well damped results. The maximum transient voltage was 0.92 P.U. at the Devers 230 kV bus for either the Palo Verde-North Gila 500 kV line or the Palo Verde-Yuma West 500 kV line outage.

c) Post-Transient Results (See PT-Table 2)

A comparison of the pre and the post-projects ultimate system indicated that there was no adverse impact on the post-transient voltage stability performance for any of the contingencies studied. For the pre-project benchmark analysis three single and three double contingency outages were tested. Four cases showed acceptable results and the performance levels were within the study criteria. One case was marginally satisfactory. For the worst outage of the Imperial Valley-Miguel 500 kV line outage the minimum reactive power margin at the South Bay 69 kV bus was 158 MVAR and was slightly above the 150 MVAR limit requirement. No voltage deviations exceeding the limits were detected. The maximum post-transient voltage dip was 2.2% at the Miguel 230 kV bus.

For the post-project system, the same contingency outages along with a simultaneous outage of the Palo Verde-North Gila and Palo Verde-Yuma West 500 kV lines were tested. The results were significantly better when compared to the pre-project system study results. The outage of an Imperial Valley-Miguel 500 kV line was not critical for the post-projects ultimate system due to the addition of the new Palo Verde-Yuma West line along with the system reinforcements in the Yuma area. The worst case was an outage of the Palo Verde-Devers line that resulted in a voltage dip of 2.0 % at the Miguel 230 kV bus and reactive power margin of 270 MVAR at the South Bay 69 kV bus. No other voltage deviations exceeding 5% were detected.

3. Impact on the Arizona EHV Transmission System

a) Power Flow Results (See PF-Table 3)

In the pre-project benchmark analysis, the heaviest loading was 46.9 % of the continuous rating on the Palo Verde-Kyrene 500 kV line under base case conditions. The worst N-1 contingency was one Palo Verde-Westwing 500 kV circuit outage that resulted in a loading of 42.4 % of the emergency rating of the Palo Verde-Kyrene 500 kV line. The largest voltage deviation was 5% at the Kyrene 230 kV bus for this critical outage.

For the post-project system, the heaviest loading was 100.1 % of the continuous rating of he the Palo Verde-Kyrene 500 kV line under base case conditions. The critical loading was at 96.8 % of the emergency rating of the Palo Verde-Kyrene 500 kV line for the Palo Verde-Estrella 500 kV line outage. The largest voltage deviation was 5.0 % at the Kyrene 230 kV bus for the Panda-Kyrene line (the existing Palo Verde – Kyrene line was looped into the new Panda Station) outage and was acceptable.

b) Transient Stability Results (See TS-Table3)

Two double contingencies simulated in the pre-project stability studies were stable and well damped. The worst voltage dip of 12.0 % occurred at the Palo Verde 500 kV bus for a three-phase fault on the Palo Verde 500 kV bus and a subsequent loss of both Palo Verde-Westwing 500 kV circuits. The second N-2 contingency was a simultaneous trip of two Palo Verde generators that resulted in voltage dip of 19.0 % at the Malin 500 kV bus.

All contingencies simulated for the pre-project case were also simulated in the post-project assessment. One additional N-2 outage was tested in the post-project system analysis.

- Three-phase fault at the Palo Verde 500 kV bus cleared by the loss of both the Palo Verde - Estrella and the Panda-Kyrene 500 kV lines.

All stability results were stable and well damped. The transient voltage dip at the Palo Verde 500 kV bus was 1.0 % to 2.0 % better in the post-project cases compared to the pre-project cases. This is attributed to the available reactive power support provided by the new generation projects located near the Palo Verde 500 kV Switchyard.

c) Post-Transient Results (See PT-Table 3)

One single and two double contingency outages were tested in the pre-project analysis. The N-1 contingency of the Palo Verde – Kyrene 500 kV line resulted in marginal system performance. This outage resulted in a 6.0 % voltage deviation at the Silverking 230 kV bus (no load bus). While this slightly exceeds WSCC criteria, the voltage deviation is primarily related to imports into the Phoenix area. The minimum reactive power margin was 359 MVAR at this bus. The two double contingency cases were well within the WSCC criteria. The worst N-2 outage was a simultaneous trip of two Palo Verde generators that resulted in a 5.0 % voltage deviation at both Pinnacle Peak and Silver King 230 kV buses. The reactive power margins for the two aforementioned particular buses were the same at 248 MVAR (the allowable limit of 103 MVAR) from this particular N-2 outage.

For the post-project system, the same three contingency outages were tested. The worst N-1 contingency was the outage of the Panda-Kyrene 500 kV line that resulted in a voltage deviation of 5.0 % at the Kyrene, Pinnacle Peak and Silver King 230 kV buses. The other N-1 and N-2 outages showed a significant increase in reactive power margin and an improvement in voltage deviation when compared to the pre-project results. However, the N-2 outage of the Palo Verde-Estrella and Panda-Kyrene 500 kV lines did not results in acceptable system performance. As in earlier cases, this result is primarily due to import constraints into the Phoenix area. Approximately 200 MW of load shedding in the Phoenix area was required to attain acceptable system performance. The results showed a voltage deviation of 10.0 % at the Kyrene, Pinnacle Peak, Silver King and Westwing 230 kV buses. The reactive power margins were in the ranges of 170 MVAR to 250 MVAR, which were above the allowable limit of 103 MVAR for these 230 kV transmission buses.

A sensitivity of lowering Palo Verde operating voltage by 3 % to 515 kV (1.03 P.U.) from 530 kV (1.06 P.U.) was also evaluated. The results showed that the Palo Verde 500 kV bus reactive margin reduced to 1437 MVAR from 1501 MVAR and was considered to be of little or no impact on the Palo Verde transmission system.

4. Impact on the Palo Verde Plant Voltage with Only One Generator In-Service (See TS-Table 4)
As required by the Palo Verde plant, a dynamic simulation study to evaluate the impact on the Palo Verde 500 kV voltage with all three Palo Verde plants out of serviced is required. Of concern is the ability to maintain adequate post-disturbance voltage at the Palo Verde 500 kV bus to support Palo Verde plant safety functions. For the pre-project benchmark system, three single contingency outages were tested. The worst N-1 contingency was tripping the last Palo Verde generator off line. This resulted in a 5.0 % voltage dip and a post-disturbance recovery voltage of 1.03 P.U. at the Palo Verde 500 kV bus after a 10 second stability simulation.

   For the post-project system, the same contingency outages were tested for three transfer scenarios. The results for all contingencies studied were significantly improved when compared to the pre-project results. The maximum Palo Verde 500 kV bus voltage dip was 1.0 % after the disturbance with full recovery to 1.06 P.U. (530 kV) of the pre-disturbance voltage after a 10-second stability simulation. This voltage improvement is be attributed to reactive power support provided by the new generation projects located near the Palo Verde 500 kV Switchyard.

5. Impact on the Simultaneous EOR/SCIT/COI Transfer Limits (See TS-Table 5)
Recent OTC studies have indicated that a simultaneous trip of two Palo Verde generators would cause in a severe voltage depression in the Northwest region that could result in the loss of the California-Oregon Intertie (COI). As a result, studies were performed to assess the interaction of scheduling power from the New Generation and the EOR/SCIT/COI paths. The following two N-2 contingency outages were investigated for both pre-project and post-ultimate systems to evaluate their impact on the simultaneous EOR/SCIT/COI transfer limits:

a) The simultaneous trip of two Palo Verde generators

b) Three-phase fault at the Palo Verde 500 kV bus with outage of two Palo Verde-Westwing 500 kV circuits

In addition, the following two N-2 contingency outages were also studied as possible common corridor outages:

a) Three-phase fault at the Palo Verde 500 kV bus with outage of both the Palo Verde-N. Gila and the Palo Verde-Yuma West 500 kV lines

b) Three-phase fault at the Palo Verde 500 kV bus with outage of both the Palo Verde-Kyrene and the Palo Verde-Estrella 500 kV lines

For the pre-project benchmark system, the EOR/SCIT/COI transfers were at 6,576MW, 14,443 MW and 4,350 MW respectively. The two double contingency outages were tested and showed stable and damped. The worst N-2 was the simultaneous trip of two Palo Verde generators. Results showed a maximum transient voltage dip of 0.76 P.U. (32.0 % deviation) at the Malin 500 kV bus. The next worst case was a three-phase fault cleared by the loss of both Palo Verde-Westwing 500 kV circuits. This case resulted in a maximum voltage dip of 0.89 P.U. (17.0 % deviation) at the Palo Verde 500 kV bus.

For the post-project system, the EOR/SCIT/COI transfers were at 7,576 MW, 15,444 MW and 4,346 MW respectively. Results from the four N-2 outages were stable and well damped. The worst case was a simultaneous trip of two Palo Verde generators that resulted a maximum transient voltage dip of 0.81 P.U. (27.0 % deviation) at the Malin 500 kV bus. The stability results clearly indicated a positive impact of reducing a potential voltage collapse problem in the northwest as compared to the Pre-Projects benchmark case. This benefit can be attributed to the ability of the New Generation to cover for a sudden loss of significant amounts of generation at Palo Verde. A three-phase fault at the Palo Verde 500 kV bus cleared by the loss of both Palo Verde-Westwing 500 kV circuits was not critical. This case resulted in a maximum voltage dip of 1.04 P.U. (only 2.0 % deviation) compared to a voltage dip of 0.89 P.U. (17.0 % voltage deviation) at the Palo Verde 500 kV bus noted in the pre-Project benchmark case. This can be attributed to the added voltage support provided by the New Generation in the Palo Verde area.

A comparison of the pre and the post-project study results show that the New Generation and transmission do not have an adverse impact on the EOR/SCIT/COI paths at these simultaneous transfer levels evaluated in the study.

6. Impact on Palo Verde Voltage and Reactive Power Control

There are major concerns related to certain operating conditions that may have some impact on the reactive power output from the existing Palo Verde nuclear generating units, and voltage control on the Palo Verde transmission capability. Therefore, it is necessary to conduct a dynamic simulation study to evaluate the voltage and reactive power control effects on the Palo Verde 500 kV transmission system.

a) The Var Control (See TS-Table 6)

The pre-project benchmark system was represented with three nuclear units on-line generating a total of 4,186 MW and 1,186 MVAR respectively. It should be pointed out that Palo Verde 500 kV bus was regulated at 530 kV (1.06 P.U.), a normal condition. Based on the studies performed to date, the worst contingency is a three-phase fault at the Palo Verde 500 kV bus cleared by loss of both Palo Verde-Westwing 500 kV lines. For this contingency, the results were stable and damped with voltage dips of 0.92 P.U. and 1.02 P.U. at the Palo Verde and Malin 500 kV buses, respectively. These results were expected since the Palo Verde system was in an unstressed condition.

For the post-project system with new generation of 6,750 MW, the same contingency was tested for various var interchange scenarios. The results indicated no negative impact on the Palo Verde plant and its associated transmission system. For the net generation output of 10,741 MW (3,991 MW of PVNGS and 6,750 MW of new projects) at Palo Verde, a total of 3,060 MVAR is required from all the New Generators to maintain a 530 kV operating voltage at the Palo Verde 500 kV bus. Although, the total var outputs from the new generations projects ranged from 1,653 MVAR to 2,407 MVAR. All cases showed about equal dynamic performance. It should be mentioned that minimizing var impact on existing Palo Verde Nuclear Generating Station could be done by a good coordination among the generation projects.

b) The Voltage Control (See TS-Table 7)

It should be noted that the ability to schedule New Generation out of the Palo Verde area is dependent upon the operating voltages at the sending and receiving ends of the network. This is particularly true when the transmission system is under stressed conditions. Study results have shown that if all New Generation and transmission is in-service, approximately 6,750 MW of New Generation can be scheduled out of Palo Verde. These results were based on maintaining a 530kV operating voltage at Palo Verde.

To comply with Palo Verde plant safety requirements, studies were performed to determine how much power could reliably be delivered out of the Palo Verde switchyards without impacting on the PVNGS if operating voltages were operated within a bandwidth of 525 kV (1.05 P.U.) and 535 kV (1.07 P.U.).

The study results showed that New Generation schedules out of Palo Verde would be constrained to 6550 MW (a 200 MW reduction) if the Palo Verde bus operating voltage reduced to 525 kV (1.05 P.U.). On the other hand, approximately 6,800 MW (a 50 MW increase) of New Generation could be scheduled out of Palo Verde if the Palo Verde bus operating voltage were raised to 535 kV (1.07 P.U.).

7. Impact on the Palo Verde Plant Under Maximum Bucking/ Boosting Conditions (See TS-Table 8)

As requested by Palo Verde Nuclear Generating Station (PVNGS) Electric Design, this dual bucking/boosting study was conducted to determine whether any negative impact would occur with the interconnection of new generation project.

This bucking/boosting impact study was conducted using the base cases from the APS' "Electrical Power System Dynamic Stability Studies for PVNGS Uprates". The system studied in the pre-new generation project benchmark cases was the projected 2003 light autumn and simulated the Palo Verde maximum bucking (-1,013 MVAR) or maximum

boosting (1,223 MVAR) conditions. For the study purposes, the Red Hawk Generation Project and a radial line tied to the PVNGS was incorporated in the post-project base cases. This new generation project represented a 2,120 MW merchant plant with a maximum boosting (952 MVAR) and a maximum bucking (-200 MVAR) capability. For this study, only 1,121 MW of generation output was modeled in the cases with 500 MW was scheduled to California, 300 MW scheduled to Arizona, 200 MW scheduled to New Mexico and the balance was left to serve the plant auxiliary load. Under the normal operating scenario, the maximum bucking or maximum boosting conditions could be alleviated with the incorporation of new generation project that can provide to the system with the desired additional either leading or lagging reactive power capability. In departure from this normal operating scenario, the sensitivity of reactive power flows more or less than the expected bucking/boosting conditions for the undesired circumstances was also investigated.

As requested, the worst disturbance for a three-phase fault on the Perkins 500 kV bus resulting in a simultaneous loss of the Perkins-Mead 500 kV line and both Palo Verde-Westwing 500 kV circuits was evaluated in the maximum bucking case. In addition to this triple line crossing outage, a disturbance for a three-phase fault on the Palo Verde 500 kV bus and a simultaneous loss of both Palo Verde-Westwing 500 kV circuits was also examined in the maximum boosting case.

The results indicated that no negative impact on the PVNGS plant operation with either maximum bucking or maximum boost conditions. The disturbances simulated in the study clearly demonstrated stable performance with no criteria violations, even with an additional 7% generation above the net uprated capacity to provide an extra safety margin.

B. New Major Transmission Line(s) Initially Out Of Service:

As noted earlier, during the course of the studies it was unclear if all of the proposed transmission projects would continue to participate in the Hassayampa switchyard. To assess the impact of the transmission projects on the study results, sensitivity studies were performed to determine the maximum amount of New Generation that could be scheduled out of Palo Verde with one or more of the proposed transmission projects out of service. The sensitivity studies performed are discussed below.

1. One New Major Line Initially Out Of Service (See Exhibit 1)

   a) Palo Verde-Mexico 500 kV Tie Initially Out Of Service

   <u>Palo Verde Transmission Capability</u>

   The maximum Palo Verde transmission capability with the Palo Verde-Mexico 500 kV tie out of service was approximately 5,850 MW. The New Generation schedules assumed in the case were 3,150 MW to Arizona, 1,250 MW to California, 600 MW to Utah and 850 MW to New Mexico and Colorado. This case was limited by power flow. The limiting elements were: (1) the base case continuous loading of the Palo Verde-Kyrene 500 kV line, and (2) the 30- minute emergency loading of the Palo Verde-North Gila 500 kV series capacitors for an outage of the Palo Verde-Yuma West 500 kV line. It should be mentioned that a three-phase fault at the Palo Verde 500 kV bus cleared by the loss of both Palo Verde-Westwing 500 kV circuits would not be stable if the total number of new generators in-service were reduced to 45 units from 49 units in the

ultimate system. This is attributed to a reduction of about 345 MVAR in reactive power support from the ultimate system.

Palo Verde Transmission Capability Decrement

The Palo Verde capability decrement with the Palo Verde-Mexico 500 kV tie out of service was approximately 900 MW. The decrement was taken from all lines in service shown in Exhibit 1.

b) Out Palo Verde-Yuma West 500 kV Line Initially Of Service

Palo Verde Transmission Capability

The maximum Palo Verde transmission capability with the Palo Verde-Yuma West 500 kV line out of service was approximately 5,850 MW. The New Generation schedules assumed in the case were 3,550 MW to Arizona, 1,000 MW to Mexico, 600 MW to Utah and 850 MW to New Mexico and Colorado. This case was limited by power flow. The limiting elements were reached the continuous ratings of (1) the Palo Verde-Kyrene 500 kV line breakers, disconnect switches and wave traps etc. and (2) the Palo Verde-N. Gila 500 kV series capacitors under base case conditions. It should be mentioned that a three-phase fault at the Palo Verde 500 kV bus cleared by the loss of both Palo Verde-Westwing 500 kV circuits would not be stable if the total number of new generators in-service were reduced to 42 units from 49 units in the ultimate system. This is attributed to a reduction of about 540 MVAR in reactive power support from the ultimate system.

Palo Verde Transmission Capability Decrement

The Palo Verde capability decrement with the Palo Verde-Yuma West 500 kV line out of service was approximately 900 MW. The decrement was taken from all lines in service shown in Exhibit 1.

c) Palo Verde-Estrella 500 kV Line Initially Out Of Service

Palo Verde Transmission Capability

The maximum Palo Verde transmission capability with the Palo Verde-Estrella 500 kV line out of service was approximately 5,250 MW. The transfer schedules assumed in the case were 1,950 MW to Arizona, 1,150 MW to California, 600 MW to Utah and 550 MW to New Mexico and Colorado. This capability was determined by the stability limit. This stability limit was caused by a three-phase fault at the Palo Verde 500kV bus cleared by the loss of both Palo Verde-Westwing 500 kV circuits.

Palo Verde Transmission Capability Decrement

The Palo Verde capability decrement with the Palo Verde-Estrella 500 kV line out of service was approximately 1,500 MW. The decrement was taken from all lines in service shown in Exhibit 1.

2. Two New Major Lines Initially Out Of Service (See Exhibit 2)

a) Both Palo Verde-Mexico and Palo Verde-Yuma West Lines Initially Out Of Service

Palo Verde Transmission Capability

The maximum Palo Verde transmission capability with both the Palo Verde-Mexico and Palo Verde-Yuma West 500 kV lines out of service was approximately 4,850 MW. The transfer schedules assumed in the case were 3,500 MW to Arizona, 600 MW to Utah and 750 MW to New Mexico and Colorado. This case was power flow limited. The

limiting elements were the continuous ratings of (1) the Palo Verde-Kyrene 500 kV line breakers, disconnect switches and wave traps etc. and (2) the Palo Verde-N. Gila 500 kV series capacitors under base case conditions. It should be mentioned that a three-phase fault at the Palo Verde 500kV bus cleared by the loss of both Palo Verde-Westwing 500 kV circuits would not be stable if the total number of new generators in-service were reduced to 34 units from 49 units in the ultimate system. This is attributed to a reduction of about 1,051 MVAR in reactive power support from the ultimate system

Palo Verde Transmission Capability Decrement

The Palo Verde capability decrement with both the Palo Verde-Mexico and Palo Verde - Yuma West 500 kV lines out of service was approximately 1,900 MW. The decrement was taken from all lines in service shown in Exhibit 2.

b) Both Palo Verde-Mexico and Palo Verde-Estrella 500 kV Lines Initially Out Of Service

Palo Verde Transmission Capability

The maximum Palo Verde transmission capability with the Palo Verde-Mexico and Palo Verde-Estrella 500 kV lines out of service was approximately 4,450 MW. The transfer schedules assumed in the case were 1,950 MW to Arizona, 1,150 MW to California, 600 MW to Utah and 750 MW to New Mexico and Colorado. This case was power flow limited. The limiting element was the base case continuous loading of the Palo Verde-Kyrene 500 kV line. It should be mentioned that a three-phase fault at the Palo Verde 500kV bus cleared by the loss of both Palo Verde-Westwing 500 kV circuits would not be stable if the total number of new generators in-service were reduced to 44 units from 49 units in the ultimate system. This is attributed to a reduction of about 254 MVAR in reactive power support from the ultimate system.

Palo Verde Transmission Capability Decrement

The Palo Verde capability decrement with both the Palo Verde-Mexico and Palo Verde-Estrella 500 kV lines out of service was approximately 2,300 MW. The decrement was taken from all lines in service shown in Exhibit 2.

c) Both Palo Verde-Yuma West and Palo Verde-Estrella 500 kV Lines Initially Out Of Service

Palo Verde Transmission Capability

The maximum Palo Verde transmission capability with both the Palo Verde-Yuma West and Palo Verde-Estrella 500 kV line out of service was approximately 4,645 MW. The transfer schedules assumed in the case were 2,195 MW to Arizona, 1,000 MW to Mexico, 600 MW to Utah and 850 MW to New Mexico and Colorado. This case was power flow limited. The limiting elements reached were the continuous ratings of (1) the Palo Verde-Kyrene 500 kV line breakers, disconnect switches and wave traps etc. and (2) the Palo Verde-N. Gila 500 kV series capacitors under the base case conditions. It should be mentioned that a three-phase fault at the Palo Verde 500kV bus cleared by the loss of both Palo Verde-Westwing 500 kV circuits would not be stable if the total number of new generators in-service were reduced to 47 units from 49 units in the

ultimate system. This is attributed to a reduction of about 104 MVAR in reactive power support from the ultimate system

Palo Verde Transmission Capability Decrement

The Palo Verde capability decrement with both the Palo Verde-Yuma West and Palo Verde-Estrella 500 kV lines out of service was approximately 2,105 MW. The decrement was taken from all lines in service shown in Exhibit 2.

3. Three New Major Lines Initially Out Of Service (See Exhibit 3)

a) With 37 New Generating Units In Service

Palo Verde Transmission Capability

The maximum Palo Verde transmission capability with 37 new generating units in service was approximately 3,455 MW. The transfer schedules assumed were either (1): 2,005 MW to Arizona, 600 MW to Utah and 850 MW to New Mexico and Colorado or (2): 1,000MW to California and 2,455 MW to Arizona. This case was both power flow and stability limited. The limiting elements reached were the continuous ratings of (1) the Palo Verde-Kyrene 500 kV disconnect switches and breakers, and (2) the Palo Verde-N. Gila 500 kV series capacitors under the base case conditions. The stability limit was caused by a three-phase fault at the Palo Verde 500 kV bus cleared by the loss of both Palo Verde-Westwing 500 kV circuits. The reactive power support from the new generating units played a major role in maintaining system stability for this N-2 contingency. For reactive power support, it is estimated that a total of 3,937 MVAR could be provided to the Palo Verde transmission system by these 37 new generators.

Palo Verde Transmission Capability Decrement

The Palo Verde capability decrement with 37 new generating units in service and with all three new Palo Verde interconnected lines out of service was approximately 3,295 MW. The decrement was taken from all lines in service shown in Exhibit 3.

b) With 19 New Generating Units in Service

Palo Verde Transmission Capability

The maximum Palo Verde transmission capability with 19 new generating units in service was approximately 2,600 MW. The transfer schedules assumed in the case were 1,000 MW to California and 1,600 MW to Arizona. This case was stability limited. The stability limit was caused by a three-phase fault at the Palo Verde 500kV bus cleared by the loss of both Palo Verde-Westwing 500 kV circuits. The reduction in the Palo Verde transmission capability was due to a decrease in the number of new generating units in service from the previous case. For reactive power support, it is estimated about a total of 2,259 MVAR could be provided to the Palo Verde transmission system by these 19 new generators.

Palo Verde Transmission Capability Decrement

The Palo Verde capability decrement with 19 new generating units in service and with all three new Palo Verde interconnected lines out of service was approximately 4,150 MW. The decrement was taken from all lines in service shown in Exhibit 3.

c) With 11 New Generating Units In Service

Palo Verde Transmission Capability

The maximum Palo Verde transmission capability with 11 new generating units in service was approximately 1800 MW. The transfer schedules assumed were either (1): 1,800 MW to Arizona or (2): 900 MW to California and 900 MW to Arizona. Either case was stability limited. The stability limit was caused by a three-phase fault at the Palo Verde 500kV bus cleared by the loss of both Palo Verde-Westwing 500 kV circuits. A further reduction in the Palo Verde transmission capability was due to a further decrease of number of new generating units in service from the previous case. For reactive power support, it is estimated about a total of 1,300 MVAR could be provided to the Palo Verde transmission system by these 11 new generators.

Palo Verde Transmission Capability Decrement

The Palo Verde capability decrement with 11 new generating units in service and with all three new Palo Verde interconnected lines out of service was approximately 4,950 MW. The decrement was taken from all lines in service shown in Exhibit 3.

C. Transmission Upgrade /Mitigation With Only One Palo Verde-Estrella 500 kV Line In-Service

As described in the Section VIII.H.2.a above, the maximum Palo Verde transmission capability with only the Palo Verde-Estrella 500 kV lines in-service was determined to be approximately 4,850 MW. This transmission capability was based on the power flow constraints. The limiting elements were the (a) the Palo Verde-Kyrene 500 kV line breakers, disconnect switches and wave traps etc. and (b) the Palo Verde-N. Gila 500 kV series capacitors and the line sagging limitation under the base case conditions. As determined by the studies, increasing the amount of New Generation scheduled out of Palo Verde would exceed the system stability limit unless some types of mitigation were implemented. Additional studies were conducted to determine how much New Generation scheduling capability could be gained by upgrading the constraining transmission components and applying dynamic remedial action, if required. A review of the Palo Verde – N. Gila and Palo Verde – Kyrene 500 kV line constraints yielded several transmission upgrades that could be implemented on these lines to increase their current ratings. The new ratings are listed below:

Transmission Upgrades

- The new ratings for the Palo Verde-North Gila 500 kV line are 1,800 A (continuous) and 2,400 A (emergency). The existing continuous and emergency ratings are 1,400 A and 1,890 A, respectively.
- The new ratings for the Palo Verde-Kyrene 500 kV line are 3,000 A (continuous) and 3,000 A (emergency). The existing continuous and emergency ratings are 2,000 A and 2,051 A, respectively.

Stability Mitigation:

- Application of generator tripping if necessary. The following is a brief summary of the study results:

1. Palo Verde Transfer Capability
   The base case incorporated all new generation projects dispatched with the following schedules: 1,500 MW to California including some displacement of Mohave and Hoover generation, 3,500 MW to Arizona, 350 MW to Colorado and 700 MW to New Mexico.

   The modified Palo Verde transmission system with the addition of Palo Verde-Estrella line can accommodate a total of 6,050 MW new generation. This indicated an increase of 1,200 MW from the transmission upgrade and stability mitigation.

   a) Power Flow Results (See PF-Table 4)

      The Power flow limitations are: (a) the Palo Verde-Devers line reached their line series capacitors emergency (30 minutes) rating for an outage of the Palo Verde-North Gila line, and (b) the remaining Palo Verde-Westwing line reached the circuit breakers emergency rating for an outage of one Palo Verde-Westwing line. No low voltage limits were detected.

   b) Stability Results (See TS-Table 9)

      The stability limitation was a three-phase fault on the Palo Verde 500 kV bus and cleared by the loss of both Palo Verde-Westwing 500 kV circuits. This required tripping of approximately 1,200 MW of new generation to maintain stability.

   c) Post-Transient Results (See PT-Table4)

      The worst outage case for the post-transient conditions was a simultaneous outage of both Palo Verde—Estrella and Panda-Kyrene lines. This N-2 contingency required tripping of about 400 MW load in the Phoenix areas.

2. EOR/SCIT Transfer Capability

   a) Power Flow Results (See PF-Table5)

      Prior to the upgrades applied to the Palo Verde-North Gila line, the Arizona to California transfer capability (EOR) was limited to approximately 6,576 MW. This transfer limit resulted from the thermal loading on the Palo Verde-North Gila 500 kV series capacitors reaching 100.2 % of their continuous rating (1,400 A) under the base case conditions. Increasing the Palo Verde-North Gila line rating results in the ability to increase the EOR transfer limit from 6,576 MW to approximately 6,973 MW. This results in a gain of about 400 MW in EOR transfer capability as a result of the line rating mitigation. This limit was based on the thermal loading on the Palo Verde-Devers line series capacitors, which reached 99.8 % of their 30-miniute emergency rating (2,430a) for an outage of the Palo Verde-North Gila line. No significant voltage problems were detected for any single contingency outages.

   b) Stability Results (See TS-Table 10)

      For the post-project modified transmission system with the EOR/SCIT transfers at 6,973 MW and 14,844 MW respectively, system stability was tested for the same five critical outages in the dynamic simulation. The stability results were stable and well damped. The maximum transient voltage dip was 0.88 P.U. at the Devers 230 kV bus for the Palo Verde-North Gila outage.

c) Post-Transient Results (See PT-Table 5)

The results showed that no significant voltage problems were found. The reactive power margin requirements and voltage deviations were within the WSCC post-transient performance criteria.

3. Estimated Costs for Transmission Upgrades
The estimated cost for the following two major transmission upgrades is about $10.0 million. Upgrading these facilities is considered to be a significant undertaking. As such, an in-depth outage evaluation would be required to fully assess the cost and system impact of performing these upgrades.

a) Palo Verde-North Gila Line Upgrade

The total cost to upgrade this line is estimated to be about $5.0 millions. There are three factors involved in increasing the rating of the Palo Verde-North Gila line:

i. Series capacitors are currently rated at 1,400 A and will cost around $1.5 million to $2.0 million to upgrade them for 2,000 A continuous.

ii. The line is in the common corridor with railroad and to avoid interference with railroad communication circuits some of the railroad communication equipment will have to be upgraded. This is estimated to be about $1.0 million to $2.0 million.

iii. There are about 10 tower spans which will have to be fixed to remove the sag limitation and allow the line rating increase to 1,800 A continuous and 2,400 A emergency. Even higher ratings are possible but will require modifying more tower spans. The cost for fixing this item is not available at this time. It was considered to be small as compared to the cost of first two items.

b) Palo Verde-Kyrene Line Upgrade

The total cost to upgrade this line is estimated to be about $ 4.0 million to $5.0 million. The bays at Kyrene are currently rated for 2,000 A continuous and 2,501 A emergency. It is required to replace the existing breakers, disconnect switches and wave traps in order to increase the line rating to 3,000 A both continuous and emergency. The main bus is rated 4,800 A and the bay wire is fine for 3000 A. Therefore, it still could probably use the existing wire unless the new breakers and switches were physically different enough to where the jumpers were too short and would need replacing.

D. No Interconnection of Panda Generation Project to Palo Verde (See TS-Table 10A and TS-Table 10B)

As noted earlier, the Panda Gila River Generation Project has decided to not participate in the Hassayampa switchyard. Additional sensitivity studies were performed to assess the impact on the study results of removing the Panda project from the study models. Further studies were conducted with the remaining New Generation and the Palo Verde – Estrella 500 kV line project in-service. With the addition of the Palo Verde-Estrella 500 kV line, the Palo Verde transfer levels could be operated between minimum (about 4,850 MW) and maximum (approximately 6,050 MW) as indicated in the previous studies.

The minimum Palo Verde transfer capability of 4,850 MW was based on neither transmission line upgrades nor stability mitigation. On the other hand, maximum Palo Verde transfer capability of 6,050 MW included the Palo Verde – Estrella line in-service as well as the Palo Verde – Kyrene and Palo Verde – N. Gila line upgrades, and 1,200 MW of generator dropping for the critical disturbance. Removing the Panda Generating Project from the base case resulted in a net decrease of 223 MVAR of reactive capability from the case. The results as tabulated in TS-Table 10A show that a transfer capability of 4,850 MW would be reduced to 4,725 MW unless additional measures such as installing a 375 MVAR of SVC or tripping 190 MW of new generation at Palo Verde were implemented. Previously, the 6,050 MW of upgraded Palo Verde transfer capability included all 49 generating units (including Panda's 12 generating units) with a maximum reactive capability of 4,820 MVAR. Without the Panda Generation, this reactive capability will be reduced to 3,488 MVAR from the remaining 37 generating units on-line, a decrease of 1,332 MVAR. As a result, the stability mitigation will require 2,202 MW of generator tripping instead of 1,210 MW

Further analysis showed that the 4,850 MW scheduling ability could be demonstrated using a more recent and accurate power flow/stability data set. The sensitivity analysis on the power flow/stability data set accuracy is discussed in more detail in the next section of this report.

As found in the previous study, the option of installing some amount of SVC could alleviate heavy requirement on new generation dropping. Further study is required to weigh system reliability versus economic tradeoffs among the various new generation projects.

Again, these results are compared to the results using the OTC2000HS model. As expected, the mitigation requirements are less as compared to the results derived from the WATS2002HS model.

E. Accuracy of the System Models

1. Pre-Projects Benchmark Comparison (See Exhibit 4)
   Throughout the Palo Verde Interconnection system studies, the WATS 2002 Heavy Summer Base Case was used. This base case was originally picked from the WSCC 99 HS025 OTC Base Case. Since that case was created two years ago in 1998, the WATS Study Group has undertaken extensive efforts to review and update the base cases in 1999. As a result of questions raised by the WATS Task Force, additional sensitivity studies were performed using a more recent WSCC OTC base case. The objective of these sensitivity studies was to validate the study results that have had been obtained using the earlier system study data sets.

   SRP worked with several WATS members in the performance of these sensitivity studies. As suggested by the CAISO, additional study work was performed using the most recent WSCC OTC base case. The WSCC 2000 Heavy Summer OTC base case was obtained from the CAISO to conduct validation studies. In addition, SRP contacted BPA to obtain new model data for BPA's John Day, Dalles and McNary hydro generators. The representation of this particular hydro generation had been significantly revised since the 1999 OTC base cases were approved by WSCC. As an alternative validation effort, this new model representation was incorporated into the existing WATS base cases so that study results could be compared to those obtained from the WSCC 2000 Heavy Summer OTC base case as well as the original WATS base cases. In addition, these sensitivity studies were intended to provide the WATS Study Group in the Palo Verde transmission

system as well as in the Arizona/California power system with insight into the EOR/SCIT nomogram limits between the WATS2002HS Case and OTC2000HS Case.

The following analysis was performed:

a) Power Flow Limits:

The OTC2000HS02 base case schedules were adjusted to mirror the near exact power flow and simulation results as the original WATS2002HS02 base case. Both cases have an EOR transfer limit of 6,576 MW that was determined by the thermal constraint on the Palo Verde-North Gila 500 kV line series capacitors. This constraint was based on the Palo Verde-North Gila series capacitors continuous rating (1,400 A) under the base case conditions.

b) Stability Performance:

For the OTC2000HS02 case, the expected worst case for a Palo Verde-N. Gila 500 kV line outage with EOR at 6,576 MW and SCIT at 14,443 MW was tested. Two additional cases; a simultaneous trip of two Palo Verde generators and a simultaneous loss of both Palo Verde-Westwing 500 kV circuits were also examined. All cases showed stable and damped.

The base system responses such as voltage and machine rotor angle swings for each critical contingency showed the same trends and performance as those obtained from the WATS200HS02 base case OTC2000HS base case.

c) Post-Transient Load Flow Limits

The following four critical outages were tested based on the OTC2000HS02 case:

i. Palo Verde-N. Gila 500 kV line
ii. Imperial Valley-Miguel 500 kV line
iii. Two Palo Verde generators
iv. Two San Onofre generators.

The post-transient load flow results for the aforementioned outages based on the OTC2002HS02 case are generally in agreement with the results derived from the WATS2002HS02 case. It should be mentioned that system loads represented in the two base cases were significantly different, therefore affecting the values of the results. Nevertheless, the trends and conclusion for the post-transient study results are very similar.

As indicated by the comparison of study results between two different pre-projects system models, it can be judged that the WATS 2002 HS case is adequate and the model data are accurate to perform the post-projects Palo Verde Interconnection system study.

2. Post-Projects Stability Results Comparison

The stability performance appeared to be the most significant limiting factor for the Palo Verde transfer capability. It was determined that a three-phase fault on the Palo Verde 500 kV bus with a double outage of the Palo Verde-Westwing 500 kV circuits was the most critical case for stability. Therefore, the stability limits were compared using the WATS2002HS model as compared to the OTC2000HS model. The following are the highlights of the comparisons:

a) New Generation Projects with Today's Palo Verde Transmission System (See Exhibits 3A & 3B)

i. For a combined total of 37 new generators on-line with a maximum generator reactive capability of 3,937 MVAR using both WATS2002HS and OTC2000HS models would achieve the same results. Results from these cases validated that an additional 3,455 MW of new generation could be scheduled out of the Palo Verde area.

ii. For a combined total of 19 new generators on-line with a maximum generator reactive capability of 2,259 MVAR, the existing Palo Verde transmission system could transfer an additional 2,600 MW of new generation using the WATS2002HS model. The OTC200HS model results showed that an additional 100 MW (2,700 MW) of New Generation could be scheduled out of the Palo Verde area.

iii. For a combined total of 11 new generators on-line with a maximum generator reactive capability of 1,300 MVAR, the existing Palo Verde transmission system based on the WATS2002HS model could transfer an additional 1,800 MW of New Generation out of the Palo Verde area. The OTC200HS model results showed that an additional 200 MW (2,000 MW) of New Generation could be scheduled out of Palo Verde.

b) New Generation Projects with Ultimate Palo Verde Transmission System (See TS-Table 1C2M)

The ultimate Palo Verde transmission system included representation of the Palo Verde-Mexico, the Palo Verde-Yuma West and the Palo Verde-Estrella 500 kV lines. This ultimate transmission system using the WATS2002 HS model could achieve an addition of 6,750 MW on the Palo Verde transfer capability. The ultimate system based on the OTC2000HS model could achieve additional 6,950 MW of Palo Verde transfer capability.

In summary, no significant difference in the stability results between the WATS2002 HS and the OTC2000HS models were noted. In overall, the transfer capability for the Palo Verde transmission system using the WATS2002HS model yielded a slightly conservative result; 100 MW to 200 MW less than that using the OTC2000HS model. This is attributed to a better voltage profile in the WSCC northwest region for the OTC2000HS case model.

F. Some Technical Sensitivity Issues

1. Impact on the Palo Verde Transfer Capability by Increasing EOR Transfer (See TS-Table 11)

In the original studies to determine today's Palo Verde transmission capability, the OTC2000HS case was also used. As such the EOR flows were ranged from 4,960 MW to 5,290 MW. These EOR transfer values were considered to be low as limited by the thermal constraint of certain EOR line due to the reality of specific generation dispatching conditions.

These EOR flows could be much higher for some favorable operating conditions. Therefore, it is interesting to know the impact on the Palo Verde system capability if the EOR flows increased about 500 MW.

The results show that increasing EOR/SCIT transfers has a negligible impact on the Palo Verde Transmission capability with due consideration of stability limitation.

2. Sensitivity of Adding a 7 % Generation Margin to the PVNGS Units (See TS-Table 12)
According to the ANPP (Arizona Nuclear Power Project) system study guidelines and criteria, a 7 % generation margin must be added to the Palo Verde nuclear generating units as a margin for protecting plant stability. This criteria requirement is more evident for today's Palo Verde transmission system in the event of an outage of both Palo Verde-Westwing 500 kV lines under stressed conditions.

   The analysis of the impact of adding a 7% generation margin and the resultant additional system requirement options are presented below:

   a) If a total of 37 new generating units are on-line with a maximum reactive capability of 3,488 MVAR, the Palo Verde transfer capability of additional 3,455 MW will be reduced to 3,363 MW. A 92 MW in transfer scheduling reduction is required to meet the 7 % generation margin (292 MW) requirement. Other options such as tripping about 117 MW of generation or installing a 375 MVAR of SVC could maintain the same 3,455 MW additional transfer capability.

   b) If a total of 19 new generating units are on-line with a maximum reactive capability of 2,259 MVAR, the Palo Verde transfer capability of additional 2,700 MW will be reduced to 2,500 MW. A 200 MW scheduling reduction is required to meet the 7 % generation margin (292 MW) requirement. Other options such as tripping about 600 MW of generation or installing a 500 MVAR of SVC can maintain the same 2,700 MW additional transfer capability.

   c) If a total of 11 new generating units on-line with a maximum reactive capability of 1,300 MVAR, the transfer capability of additional 2,000 MW for the Palo Verde transmission system will be reduced to 1,800 MW. A 200 MW scheduling reduction is required to meet the 7 % generation margin (292 MW) requirement. Other options such as tripping about 354 MW of new generation or installing a 500 MVAR of SVC can maintain the same 2,000 MW additional transfer capability.

3. Impact on the Palo Verde Transfer Capability Due to the Double Outage of the Harquahala and Duke Energy Project lines (See TS-Table 13)
The Harquahala Generating Company, LLC and Duke Energy Maricopa, LLC are, among other generation developers, proposing to build new generation facilities in the vicinity of the Palo Verde Nuclear Generating Station. These two facilities, the Harquahala Generation Project and the Arlington Generating Project, will be interconnected to the new Hassayampa 500 kV switchyard, a new switchyard being constructed adjacent to the existing Palo Verde 500 kV switchyard, via single circuit 500 kV lines. While transmission line routing for these two projects have not been finalized, there is a possibility that the two single circuit lines may be required to share a common corridor or transmission tower. The WSCC Reliability Criteria addresses this type of occurrence by requiring that an acceptable level of system performance must be maintained for loss of all circuits in a common corridor. In this specific case, the loss of both lines interconnecting the Harquahala and

Arlington generation projects would result in the loss of all generation at these plants. The Harquahala Generating Company, LLC requested Salt River Project (SRP) to perform additional stability study to assess the impact of this N-2 contingency. This section describes the results of this sensitivity study.

The objective of this sensitivity study is to determine if the simultaneous loss of the Harquahala-Hassayampa 500 kV and Arlington-Hassayampa 500 kV lines is more or less restrictive than the most limiting constraint established in the previous studies.

Stability studies were performed for the simultaneous loss of the Harquahala and Arlington generating plants at the established limits in the previous study to determine if the Harquahala/Arlington contingency is more or less restrictive than already identified constraints. A seven percent (7 %) plant stability margin was added to the Palo Verde plant output (4,186 MW x 7 %) for constraints related to Palo Verde plant stability. All applicable study methodologies, assumptions, and criteria established in the Palo Verde Interconnection Study Plan were used.

The following specific conditions were assumed for this study:

a) The full generation output of the Harquahala Generation Project (1,100 MW) and the Arlington Generation Project (1,200 MW) was modeled in all studies.

b) The only disturbance evaluated was a three-phase fault at Palo Verde cleared by both Harquahala-Hassayampa and Arlington-Hassayampa 500 kV lines. This disturbance was compared to the most restrictive disturbance as identified in the previous studies.

The following system configurations were evaluated:

a) The 2002 Heavy Summer Ultimate System that included all proposed transmission and generation projects proposed for the Palo Verde area. This included three new 500 kV transmission lines and six new generation projects interconnected at the new Hassayampa 500 kV switchyard. As identified in the previous studies, a maximum of 6,750 MW of New Generation scheduled from a total of 49 combustion turbine generators and steam turbine generators at the Palo Verde vicinity was modeled in this system configuration.

b) The 2002 Heavy Summer Modified System that included the proposed Palo Verde-Estrella 500 kV line and the upgrade of the Palo Verde-N. Gila and the Palo Verde-Kyrene lines and excluded the generation project proposed by Panda. A maximum of 6,050 MW of New Generation was scheduled from a total of 37 combustion turbine generators and steam turbine generators at the Palo Verde vicinity was modeled in this system configuration.

c) The 2000 Heavy Summer System that was modeled for the existing transmission system. The following New Generation schedule scenarios were evaluated:

   i. A New Generation schedule of 3,455 MW from 37 units.

ii. A New Generation schedule of 2,700 MW from 19 units.

iii. A New Generation schedule of 2,300 MW from 11 units.

It should be noted that for Schedule Scenarios c. (i) and c.(ii) above, the New Generation schedule limits used in this analysis were the same as those identified in the previous study effort. However, for Schedule Scenario c. (iii), the previous studies identified a maximum New Generation schedule limit of 2,000 MW, which is 300 MW less than the full capability of the Harquahala and Arlington generating plants. For this analysis, it was assumed that the Harquahala and Arlington generating plants would be operating at their maximum combined capability of 2,300 MW.

It should be also pointed out that a 7 % generation margin was added to three Palo Verde nuclear units for scenarios c. i), c. ii), and c. iii) due to the Palo Verde Plant stability limit determined by the previous studies.

The results of the transient stability analysis are summarized in TS-Table 13.

All system configurations evaluated were stable and well damped. The voltage dips at the Palo Verde 500 kV bus were in the range of 10 % to 12 %. The Malin 500 kV voltage dips were in the range of 19 % to 25 %. These voltage dips are within the acceptable WSCC voltage criteria.

Based on the results of this sensitivity study, it is concluded that the N-2 loss of the Harquahala and Arlington Generating Plants is less severe than the most critical double outage of the two Palo Verde-Westwing 500 kV circuits. A loss of both the Palo Verde-Harquahala and Palo Verde-Duke Energy Project 500 kV lines will not cause a system stability problem.

IX. Other Significant Observations

1. There is no adverse impact on the Palo Verde transmission system or the Arizona EHV system with the heavy Arizona power imports being studied.
2. Stability studies also indicate that there would be no adverse interaction effects of the EOR/SCIT/COI paths for the simultaneous transfer levels evaluated.
3. The reactive power interchange impact on the Palo Verde power system is minimum with the desired voltage schedules and the addition of new generation projects.
4. A sensitivity study of lowering Palo Verde operating voltage by a 3 % indicated no voltage instability in the Palo Verde transmission system and could still meet the reactive margin requirement. Again, this is attributed to the additional generation and/or new transmission.
5. A delay or a cancellation of any of the three proposed new Palo Verde interconnected transmission lines would have a significant impact on the future Palo Verde Transmission capability. The future capabilities if limited by stability would be also dependent on the number of new generating units in service. Therefore, the Palo Verde transmission system capability of all three new major Palo Verde interconnected transmission lines in-service compared with one, two or three new major Palo Verde interconnected transmission line(s) initially out of service (IOS) were significantly different. Table 5 below compares the capability for various transmission and generation configurations.

Table 5

Transmission Lines In-service and/or IOS	Generators In-service	Palo Verde Capability	Capability Decrement
All 3 New Lines In-Service	All 49 New Units	6,750 MW	Base
One PV-Mexico 500KV Line IOS	45 to 49 New Units	5,850 MW	900 MW
One PV-Yuma 500 KV Line IOS	42 to 49 New Units	5,850 MW	900 MW
One PV-Estrella 500 KV Line IOS	All 49 New Units	5,250 MW	1,500 MW
Both PV-Mexico & PV-Yuma IOS	34 to 49 New Units	4,850 MW	1,900 MW
Both PV-Mexico & PV-Estrella IOS	44 to 49 New Units	4,450 MW	2,300 MW
Both PV-Yuma & PV-Estrella IOS	47 to 49 New Units	4,645 MW	2,105 MW
All 3 New Lines IOS	37 New Units	3,360 MW	3,390 MW
All 3 New Lines IOS	19 New Units	2,500 MW	4,250 MW
All 3 New Lines IOS	11 New Units	1,800 MW	4,950 MW

6. There will be no stability impact on the Palo Verde transmission system by increasing EOR/SCIT transfers if the additional resources are not scheduled from Palo Verde.
7. Adding a 7 % generation margin to the Palo Verde Nuclear Units will reduce about 100 MW to 200 MW of the determined Palo Verde transfer capability. Otherwise, generation tripping in the amount of 117 MW to 600 MW or an SVC installation in the amount of 375 MVAR to 600 MVAR is required depending upon the new generation dispatching and Palo Verde stress conditions.
8. No significant impact on the Palo Verde and the WSCC interconnected transmission system due to a double contingency outage of the Harquahala and Duke Energy Project lines.

Exhibits & Tables

PF-TABLE 1A

POWER FLOW IMPACT WITH NEW GENERATION TRANSFER TO THE EAST

CASE NO.	CASE DESCRIPTION / MAJOR LIMITING ELEMENT	(MW) EOR FLOW	(MW) PV GEN	(MW) NEW GEN	(AMP) PV-N.G.	(AMP) PV-YUMA	(AMP) PV-DV	(AMP) PV-WWG#1	(AMP) PV-WWG#2	(AMP) PV-KYR	(AMP) PV-EST	(PU) PPK 230KV	(PU) KYR 230KV	(PU) WWG 230KV	COMMENTS
	CONTINUOUS RATING		(NET)	(NET)	1400	1501	1900	3000	3000	2000	2000				
	EMERGENCY RATING				1890	2026	2430	3200	3200	2521	2521	5% MAX	5% MAX	5% MAX	
WATS-	PRE-PROJECT BENCHMARK														
2002HS 1	BASE CASE (IN MW)	4954	3991	0	1100		1010	596	596	680		1.02	1.001	1.03	
	BASE CASE FLOW(AMP)				1203		1101	663	663	766		1.02	1.001	1.03	NO PROBLEM
	% OF CONTINUOUS RATING				85.90%		45.30%	22.10%	22.10%	30.40%					
	OUTAGE CASE														
ALT A	PALO VERDE-KYRENE OUTAGE				1242		1163	1005	1005	OUT		1.001	0.97	1.02	NO PROBLEM
	% OF EMERGENCY RATING				65.70%		47.90%	31.40%	31.40%						
ALT B	ONE PALO VERDE-WWG OUTAGE				1236		1155	OUT	1108	890		1.01	1.001	1.02	NO PROBLEM
	% OF EMERGENCY RATING				65.40%		47.50%		34.60%	35.30%					
ALT C	PALO VERDE-DEVERS OUTAGE				1481		OUT	1016	1016	915		1.02	1.001	1.02	NO PROBLEM
	% OF EMERGENCY RATING				78.40%			31.80%	31.80%	36.30%					
ALT D	ONE PV-N. GILA OUTAGE				OUT		1530	996	996	912		1.02	1.001	1.02	NO PROBLEM
	% OF EMERGENCY RATING						63.00%	41.00%	41.00%	36.20%					
ULT	POST-ULTIMATE SYSTEM	EOR FLOW	PV GEN	NEW GEN	PV-N.G.	PV-YUMA	PV-DV	PV-WWG#1	PV-WWG#2	PANDA-KYR	PV-EST	PPK 230KV	KYR 230KV	WWG 230KV	COMMENTS
2002HS 01EAST	BASE CASE (IN MW)	6484	3991	6500	858	945	1412	1604	1604	1791	1250	1.03	1.01	1.03	
	BASE CASE FLOW(AMP)				939	1033	1560	1781	1781	2000	1426	1.03	1.01	1.03	LIMITED BY PANDA-KYR
	% OF CONTINUOUS RATING				67.10%	68.90%	82.10%	58.50%	58.50%	100.00%	71.30%				
ALT A	OUTAGE CASE														
	PALO VERDE-KYRENE OUTAGE				1009	1222	1699	2438	2438	OUT	1984	0.99	0.96	1	5% Deviation Acceptable
	% OF EMERGENCY RATING				53.40%	55.00%	69.80%	76.20%	76.20%		78.70%				
ALT B	ONE PALO VERDE-WWG OUTAGE				997	1100	1684	OUT	2788	2274	1678	1.02	1	1.02	NO PROBLEM
	% OF EMERGENCY RATING				52.70%	54.20%	69.30%		88.80%	90.20%	66.60%				
ALT C	PALO VERDE-DEVERS OUTAGE				1217	1361	OUT	2189	2189	2170	1559	1.03	1	1.03	NO PROBLEM
	% OF EMERGENCY RATING				69.60%	66.30%		68.41%	68.41%	86.08%	61.80%				
ALT D	PV-N. GILA OUTAGE				OUT	1775	1640	1836	1836	2024	1446	1.02	1.01	1.03	NO PROBLEM
	% OF EMERGENCY RATING					87.00%	67.49%	57.38%	57.38%	80.29%	57.30%				
ALT E	PV-ESTRELLA OUTAGE				978	1078	1638	2269	2269	2418	OUT	1.01	0.99	1.01	NO PROBLEM
	% OF EMERGENCY RATING				51.70%	53.20%	67.41%	70.91%	70.91%	95.91%					
ALT F	PV-YUMAWEST OUTAGE				1728	OUT	1662	1829	1829	2031	1451	1.02	1	1.03	NO PROBLEM
	% OF EMERGENCY RATING				90.60%		68.40%	57.16%	57.16%	80.60%	57.50%				

TS-TABLE 1A

STABILITY IMPACT WITH NEW GENERATION TRANSFER TO THE EAST

CASE NO.	PRE-PROJECT CASE DESCRIPTION	POWER FLOW (MW) SCIT FLOW	EOR FLOW	WOR FLOW	COI FLOW	PDCI FLOW	PVNG MARG	PVNG GEN	NEW GEN	PV/HSP TOT	STABILITY RESULTS BUS	Vdip	%	COMMENTS
2002HS	BASE CASE													
PRE-	(WATS2002HS01M)	13443	5028	6008	4260	2516	7%	4283	0	4283				
	N-1 CONTINGENCY													
ST-1	3 PH FLT PV-N. GILA										PV500	0.98	8.0%	Stable and well damped
ST-2	3 PH FLT PV-DEVERS										PV500	0.96	10.0%	Stable and well damped
ST-3	ONE PV GEN OUTAGE										PV500	1.04	2.0%	Stable and well damped
2002HS	BASE CASE													
PRE-	(WATS2002HS01)	13376	4954	5937	4259	2516	0%	3991	0	3991				
	N-2 CONTINGENCY													
ST-4	3 PH FLT TWO PV-WWG										PV500	0.92	14.0%	Stable and well damped
ST-5	TWO PV GEN OUTAGE										MA500	0.88	20.0%	Stable and well damped
ST-6	3 PH FLT @ PERKINS & PK-MD & 2 PV-WWG OUT										PV500	1.025	3.25%	Stable and well damped

CASE NO.	POST-ULTIMATE CASE DESCRIPTION	POWER FLOW (MW) SCIT FLOW	EOR FLOW	WOR FLOW	COI FLOW	PDCI FLOW	PVNG MARG	PVNG GEN	NEW GEN	PV/HSP TOT	STABILITY RESULTS BUS	Vdip	%	COMMENTS
2002HS	BASE CASE													
POST-	(ULT2002HS01E1M)	13484	6557	7290	3011	2516	7%	4283	6500	10783				
	N-1 CONTINGENCY													
ST-1	3 PH FLT PV-N. GILA										PV500	1.04	2.0%	Stable and well damped
ST-2	3 PH FLT PV-DEVERS										PV500	1.04	2.0%	Stable and well damped
ST-3	ONE PV GEN OUTAGE										PV500	1.04	2.0%	Stable and well damped
2002HS	BASE CASE													
POST-	(ULT2002HS01E1)	13414	6484	7220	3013	2516	0%	3991	6500	10491				
	N-2 CONTINGENCY													
ST-4	3 PH FLT TWO PV-WWG										PV500	0.94	12.0%	Stable and damped
ST-5	TWO PV GEN OUTAGE										MA500	0.91	18.0%	Stable and damped
ST-6	3 PH FLT @ PERKINS & PK-MD & 2 PV-WWG OUT										PV500	1.02	4.00%	Stable and well damped
ST-7	3PH FLT PV W/ PV-KY & PV-ESTRELL OUT										KYRENE2:	0.86	15.00%	Stable and well damped
ST-8	3PH FLT PV W/ PV-NG & PV-YUMAWEST OUT										DEVERS2:	0.88	12.00%	Stable and well damped

PT- TABLE 1A
POST-TRANSIENT IMPACT
WITH NEW GENERATION TRANSFER TO THE EAST

BENCHMARK PRE-PROJECT SYSTEM	PV GEN TOTAL	KYR MVAR	230KV VOLT	PPK MVAR	230KV VOLT	WWG MVAR	230KV VOLT	LUGO MVAR	230KV VOLT	DEVERS MVAR	230KV VOLT	MIGUI MVAR	230KV VOLT	MALIN MVAR	500 VOLT	COMMENTS
BASE CASE (WATS2002HS01)	3991		1		1.02		1.03		0.99		1		1.004		1.08	
OUTAGE																
PALO VERDE-KYRENE OUT			0.97		1		1.01									Accepable
Q / V		910	0.782	1116	0.828	1678	0.868									
BOTH PALO VERDE-WWG OUT			0.99		1		1									Accepable
Q / V		1275	0.806	1397	0.795	1749	0.775									
TWO PALO VERDE GEN OUT															1.06	Acceptable
Q / V														698	0.985	>400 MVAR Limit
PALO VERDE-DEVERS OUT									0.97		1		0.99			Accepable
Q / V								1743	0.7	1004	0.723	469	0.914			
PALO VERDE-N.GILA OUT									0.97		0.99		1.03			Accepable
Q / V								1758	0.7	1149	0.705	459	0.94			

POST-ULTIMATE SYSTEM	PV GEN TOTAL	KYR MVAR	230KV VOLT	PPK MVAR	230KV VOLT	WWG MVAR	230KV VOLT	LUGO MVAR	230KV VOLT	DEVERS MVAR	230KV VOLT	MIGUI MVAR	230KV VOLT	MALIN MVAR	500 VOLT	COMMENTS
BASE CASE (ULT2002HS01E)	10491		1.01		1.03		1.03		1		1		1		1.08	
OUTAGE																
PALO VERDE-KYRENE OUT			0.96		0.99		0.99									5% Voltage Dip @KYR
Q / V		1443	0.752	1199	0.797	1832	0.816									Acceptable
BOTH PALO VERDE-WWG OUT			0.96		0.99		1									Acceptable
Q / V		1061	0.785	1323	0.809	878	0.7									
TWO PALO VERDE GEN OUT															1.08	Accepable
Q / V														1859	0.95	>>400 MVAR Limit
BOTH PV-KYR. & PV-ESTRL OUT			0.88		0.9		0.91									Exceeded 10% V. Dips
Q / V		103	0.813	112	0.843	159	0.868									103 MVAR Limit
SAME DBL OUTAGE USING RAS			0.91		0.93		0.93									Within Voltage Limit
Q/V (LOAD SHED 100MW IN PHX)		292	0.799	310	0.826	436	0.849									Acceptable

SENSITIVITY OF LOWERING PV VOLTAGE	PV MVAR	500KV VOLT	PV MVAR	500KV VOLT	
BASE CASE		1.06		1.03	Acceptable Sufficient Var Margin
BOTH PALO VERDE-WWG OUT		1.032		1.006	
Q / V	1488	0.975	1387	0.97	

PF-TABLE 1B

POWER FLOW IMPACT WITH NEW GENERATION TRANSFER TO THE WEST*

CASE NO.	CASE DESCRIPTION / MAJOR LIMITING ELEMENT	(MW) EOR FLOW	(MW) PV GEN	(MW) NEW GEN	(AMP) PV-N.G.	(AMP) PV-YUMA	(AMP) PV-DV	(AMP) PV-WWG#1	(AMP) PV-WWG#2	(AMP) PV-KYR	(AMP) PV-EST	(PU) DEV 230 KV	(PU) LUGO 230KV	(PU) MEAD 230KV	COMMENTS
	CONTINUOUS RATING				1400	1501	1900	3000	3000	2000	2000				
	EMERGENCY RATING				1890	2026	2430	3200	3200	2521	2521	5% MAX	5% MAX	5% MAX	
WATS-	PRE-PROJECT BENCHMARK														
2002HS	BASE CASE (IN MW)	4954	3991	0	1100		1010	596	596	680		1	0.99	1.01	
1	BASE CASE FLOW(AMP)				1203		1101	663	663	766					NO PROBLEM
	% OF CONTINUOUS RATING				85.90%		45.30%	22.10%	22.10%	30.40%					
	OUTAGE CASE														
ALT A	PALO VERDE-KYRENE OUTAGE				1242		1163	1005	1005	OUT		1	0.99	0.97	NO PROBLEM
	% OF EMERGENCY RATING				65.70%		47.90%	31.40%	31.40%						
ALT B	ONE PALO VERDE-WWG OUTAGE				1236		1155	OUT	1108	890		1	0.99	1.01	NO PROBLEM
	% OF EMERGENCY RATING				65.40%		47.50%		34.60%	35.30%					
ALT C	PALO VERDE-DEVERS OUTAGE				1481		OUT	1016	1016	915		0.98	0.97	1.01	NO PROBLEM
	% OF EMERGENCY RATING				78.40%			31.80%	31.80%	36.30%					
ALT D	ONE PV-N. GILA OUTAGE				OUT		1530	996	996	912		0.97	0.97	1.01	NO PROBLEM
	% OF EMERGENCY RATING						63.00%	41.00%	41.00%	36.20%					
ULTI-	POST-ULTIMATE SYSTEM	EOR FLOW	PV GEN	NEW GEN	PV-N.G.	PV-YUMA	PV-DV	PV-WWG#1	PV-WWG#2	PANDA-KYR	PV-EST	DEV 230 KV	LUGO 230KV	MEAD 230KV	COMMENTS
2002HS	BASE CASE (IN MW)	7555	3991	3835	954	1040	1465	883	883	900	673	1.01	1	1.03	
01WEST	BASE CASE FLOW(AMP)				1033	1127	1601	967	967	1017	766				NO PROBLEM
	% OF CONTINUOUS RATING				79.30%	75.60%	84.30%	32.00%	32.00%	50.85%	38.30%				
	(CA Split:55/30/15 SCE/LA/SDGE)														
ALT A	PALO VERDE-KYRENE OUTAGE				1061	1160	1656	1288	1288	OUT	1026	1	1	1	NO PROBLEM
	% OF EMERGENCY RATING				56.50%	57.50%	68.20%	39.80%	39.80%		40.70%				
ALT B	ONE PALO VERDE-WWG OUTAGE				1063	1161	1664	OUT	1551	1142	899	1	1	1.03	NO PROBLEM
	% OF EMERGENCY RATING				56.60%	57.60%	68.50%		48.50%	45.30%	35.60%				
ALT C	PALO VERDE-DEVERS OUTAGE				1316	1463	OUT	1373	1373	1156	894	0.98	0.98	1.03	NO PROBLEM
	% OF EMERGENCY RATING				69.10%	71.50%		42.40%	42.40%	45.85%	35.40%				
ALT D	PV-N. GILA OUTAGE				OUT	1957	1689	1025	1025	1039	787	1	0.99	1.03	NO PROBLEM
	% OF EMERGENCY RATING					95.90%	69.50%	32.03%	32.03%	41.21%	31.20%				
ALT E	PV-ESTRELLA OUTAGE				1053	1150	1638	1209	1209	1212	OUT	1.01	1	1.02	NO PROBLEM
	% OF EMERGENCY RATING				56.00%	57.10%	67.40%	37.60%	37.60%	48.08%					
ALT F	PV-YUMAWEST OUTAGE				1892	OUT	1710	1040	1040	1044	792	1	0.99	1.03	PV-NG @100.1%
	% OF EMERGENCY RATING				100.10%		70.37%	32.50%	32.50%	41.41%	31.40%				of EMG RATING

Note* The California import splits modelled as follows: 55%/30%/15% to SCE/LADWP/SDG&E.

PF-TABLE 1B1

POWER FLOW IMPACT WITH TRANSFER TO THE WEST (40/40/20) SENSITIVITY)*

CASE NO.	CASE DESCRIPTION / MAJOR LIMITING ELEMENT	(MW) EOR FLOW	(MW) PV GEN	(MW) NEW GEN	(AMP) PV-N.G.	(AMP) PV-YUMA	(AMP) PV-DV	(AMP) PV-WWG#1	(AMP) PV-WWG#2	(AMP) PV-KYR	(AMP) PV-EST	(PU) DEV 230 KV	(PU) LUGO 230KV	(PU) MEAD 230KV	COMMENTS
	CONTINUOUS RATING				1400	1501	1900	3000	3000	2000	2000				
	EMERGENCY RATING				1890	2026	2430	3200	3200	2521	2521	5% MAX	5% MAX	5% MAX	
WATS-	PRE-PROJECT BENCHMARK														
2002HS	BASE CASE (IN MW)	4954	3991	0	1100		1010	596	596	680		1	0.99	1.01	
1	BASE CASE FLOW(AMP)				1203		1101	663	663	766					NO PROBLEM
	% OF CONTINUOUS RATING				85.90%		45.30%	22.10%	22.10%	30.40%					
	OUTAGE CASE														
ALT A	PALO VERDE-KYRENE OUTAGE				1242		1163	1005	1005	OUT		1	0.99	0.97	NO PROBLEM
	% OF EMERGENCY RATING				65.70%		47.90%	31.40%	31.40%						
ALT B	ONE PALO VERDE-WWG OUTAGE				1236		1155	OUT	1108	890		1	0.99	1.01	NO PROBLEM
	% OF EMERGENCY RATING				65.40%		47.50%		34.60%	35.30%					
ALT C	PALO VERDE-DEVERS OUTAGE				1481		OUT	1016	1016	915		0.98	0.97	1.01	NO PROBLEM
	% OF EMERGENCY RATING				78.40%			31.80%	31.80%	36.30%					
ALT D	ONE PV-N. GILA OUTAGE				OUT		1530	996	996	912		0.97	0.97	1.01	NO PROBLEM
	% OF EMERGENCY RATING						63.00%	41.00%	41.00%	36.20%					
ULTI-	POST-ULTIMATE SYSTEM	EOR FLOW	PV GEN	NEW GEN	PV-N.G.	PV-YUMA	PV-DV	PV-WWG#1	PV-WWG#2	PANDA-KYR	PV-EST	DEV 230 KV	LUGO 230KV	MEAD 230KV	COMMENTS
NOTE	(CA Split:40/40/20 PGE/SCE/SDGE)														
2002HS	BASE CASE (IN MW)	7491	3991	3785	956	1042	1444	866	866	906	668	1.01	1	1.03	
02WEST	BASE CASE FLOW(AMP)				1036	1128	1576	948	948	1025	760				NO PROBLEM
	% OF CONTINUOUS RATING				74.50%	75.70%	82.90%	31.40%	31.40%	51.30%	38.00%				
ALT A	PALO VERDE-KYRENE OUTAGE				1064	1161	1632	1271	1271	OUT	1022	1.01	1	1	NO PROBLEM
	% OF EMERGENCY RATING				56.60%	57.60%	67.20%	39.30%	39.30%		40.50%				
ALT B	ONE PALO VERDE-WWG OUTAGE				1065	1162	1638	OUT	1521	1148	890	1	1	1.03	NO PROBLEM
	% OF EMERGENCY RATING				56.70%	57.60%	67.40%		47.50%	45.50%	35.30%				
ALT C	PALO VERDE-DEVERS OUTAGE				1314	1458	OUT	1349	1349	1162	886	0.99	0.98	1.03	NO PROBLEM
	% OF EMERGENCY RATING				69.00%	71.30%		41.70%	41.70%	46.10%	35.10%				
ALT D	PV-N. GILA OUTAGE				OUT	1961	1663	1009	1009	1048	781	1	0.99	1.03	NO PROBLEM
	% OF EMERGENCY RATING					96.10%	68.50%	31.30%	31.30%	41.60%	31.00%				
ALT E	PV-ESTRELLA OUTAGE				1055	1151	1613	1194	1194	1218	OUT	1.01	1	1.02	NO PROBLEM
	% OF EMERGENCY RATING				56.10%	57.10%	66.40%	37.00%	37.00%	48.30%					
ALT F	PV-YUMAWEST OUTAGE				1895	OUT	1684	1019	1019	1052	785	1	0.99	1.03	PV-NG @100.2%
	% OF EMERGENCY RATING				100.20%		69.30%	31.70%	31.70%	41.73%	31.10%				of EMG RATING

PF-TABLE 1B2

POWER FLOW IMPACT WITH TRANSFER TO THE WEST (40/40/10/10) SENSITIVITY)*

CASE NO.	CASE DESCRIPTION / MAJOR LIMITING ELEMENT	(MW) EOR FLOW	(MW) PV GEN	(MW) NEW GEN	(AMP) PV-N.G.	(AMP) PV-YUMA	(AMP) PV-DV	(AMP) PV-WWG#1	(AMP) PV-WWG#2	(AMP) PV-KYR	(AMP) PV-EST	(PU) DEV 230 KV	(PU) LUGO 230KV	(PU) MEAD 230KV	COMMENTS
	CONTINUOUS RATING				1400	1501	1900	3000	3000	2000	2000				
	EMERGENCY RATING				1890	2026	2430	3200	3200	2521	2521	5% MAX	5% MAX	5% MAX	
WATS-	**PRE-PROJECT BENCHMARK**														
2002HS	**BASE CASE (IN MW)**	**4954**	**3991**	**0**	1100		1010	596	596	680		1	0.99	1.01	
1	BASE CASE FLOW(AMP)				1203		1101	663	663	766					NO PROBLEM
	% OF CONTINUOUS RATING				85.90%		45.30%	22.10%	22.10%	30.40%					
	OUTAGE CASE														
ALT A	PALO VERDE-KYRENE OUTAGE				1242		1163	1005	1005	OUT		1	0.99	0.97	NO PROBLEM
	% OF EMERGENCY RATING				65.70%		47.90%	31.40%	31.40%						
ALT B	ONE PALO VERDE-WWG OUTAGE				1236		1155	OUT	1108	890		1	0.99	1.01	NO PROBLEM
	% OF EMERGENCY RATING				65.40%		47.50%		34.60%	35.30%					
ALT C	PALO VERDE-DEVERS OUTAGE				1481		OUT	1016	1016	915		0.98	0.97	1.01	NO PROBLEM
	% OF EMERGENCY RATING				78.40%			31.80%	31.80%	36.30%					
ALT D	ONE PV-N. GILA OUTAGE				OUT		1530	996	996	912		0.97	0.97	1.01	NO PROBLEM
	% OF EMERGENCY RATING						63.00%	41.00%	41.00%	36.20%					
ULTI-	**POST-ULTIMATE SYSTEM**	**EOR FLOW**	**PV GEN**	**NEW GEN**	**PV-N.G.**	**PV-YUMA**	**PV-DV**	**PV-WWG#1**	**PV-WWG#2**	**PANDA-KYR**	**PV-EST**	**DEV 230 KV**	**LUGO 230KV**	**MEAD 230KV**	**COMMENTS**
***NOTE**	**(CA Split:40/40/10 /10 PGE/SCE/LADWP/SDGE)**														
2002HS	**BASE CASE (IN MW)**	**7709**	**3991**	**4035**	954	1043	1522	926	926	941	685	1	1	1.03	
03WEST	BASE CASE FLOW(AMP)				1032	1129	1665	1014	1014	1060	779				NO PROBLEM
	% OF CONTINUOUS RATING				74.30%	75.80%	87.60%	33.60%	33.60%	53.00%	38.90%				
ALT A	PALO VERDE-KYRENE OUTAGE				1061	1163	1723	1350	1350	OUT	1050	1	1	1	NO PROBLEM
	% OF EMERGENCY RATING				56.50%	57.70%	70.90%	41.80%	41.80%		41.60%				
ALT B	ONE PALO VERDE-WWG OUTAGE				1063	1165	1731	OUT	1629	1192	918	1	1	1.03	NO PROBLEM
	% OF EMERGENCY RATING				56.60%	57.80%	71.30%		50.90%	47.20%	36.40%				
ALT C	PALO VERDE-DEVERS OUTAGE				1325	1476	OUT	1440	1440	1206	911	0.98	0.98	1.03	NO PROBLEM
	% OF EMERGENCY RATING				69.50%	72.10%		44.40%	44.40%	47.80%	36.20%				
ALT D	PV-N. GILA OUTAGE				OUT	1957	1752	1076	1076	1083	800	1	1	1.03	NO PROBLEM
	% OF EMERGENCY RATING					96.00%	72.10%	33.40%	33.40%	42.90%	31.70%				
ALT E	PV-ESTRELLA OUTAGE				1051	1152	1703	1267	1267	1258	OUT	1	1	1.02	NO PROBLEM
	% OF EMERGENCY RATING				56.00%	57.20%	70.10%	39.20%	39.20%	45.90%					
ALT F	PV-YUMAWEST OUTAGE				1892	OUT	1774	1089	1089	1088	804	1	1	1.03	PV-NG @100.1%
	% OF EMERGENCY RATING				100.10%		73.00%	33.80%	33.80%	43.10%	31.90%				of EMG RATING

TS-TABLE 1B

STABILITY IMPACT WITH NEW GENERATION TRANSFER TO THE WEST

CASE NO.	PRE-PROJECT CASE DESCRIPTION	POWER FLOW (MW) SCIT FLOW	EOR FLOW	WOR FLOW	COI FLOW	PDCI FLOW	PVNG MARG	PVNG GEN	NEW GEN	PV/HSP TOT	STABILITY RESULTS BUS	Vdip	%	COMMENTS
2002HS	BASE CASE													
PRE-	(WATS2002HS01M)	13443	5028	6008	4260	2516	7%	4283	0	4283				
	N-1 CONTINGENCY													
ST-1	3 PH FLT PV-N. GILA										PV500	0.98	8.0%	Stable and well damped
ST-2	3 PH FLT PV-DEVERS										PV500	0.96	10.0%	Stable and well damped
ST-3	ONE PV GEN OUTAGE										PV500	1.04	2.0%	Stable and well damped
2002HS	BASE CASE													
PRE-	(WATS2002HS01)	13376	4954	5937	4259	2516	0%	3991	0	3991				
	N-2 CONTINGENCY													
ST-4	3 PH FLT TWO PV-WWG										PV500	0.92	14.0%	Stable and well damped
ST-5	TWO PV GEN OUTAGE										MA500	0.88	20.0%	Stable and well damped
ST-6	3 PH FLT @ PERKINS & PK-MD & 2 PV-WWG OUT										PV500	1.025	3.25%	Stable and well damped

CASE NO.	POST-ULTIMATE CASE DESCRIPTION	POWER FLOW (MW) SCIT FLOW	EOR FLOW	WOR FLOW	COI FLOW	PDCI FLOW	PVNG MARG	PVNG GEN	NEW GEN	PV/HSP TOT	STABILITY RESULTS BUS	Vdip	%	COMMENTS
2002HS	BASE CASE													
POST-	(ULT2002HS01W1M)	14346	7626	6888	4273	2516	7%	4283	3835	8118				
	N-1 CONTINGENCY													
ST-1	3 PH FLT PV-N. GILA										PV500	1.05	1.0%	Stable and well damped
ST-2	3 PH FLT PV-DEVERS										PV500	1.05	1.0%	Stable and well damped
ST-3	ONE PV GEN OUTAGE										PV500	1.05	1.0%	Stable and well damped
2002HS	BASE CASE													
POST-	(ULT2002HS01W1)	14276	7555	6817	4274	2516	0%	3991	3835	7826				
	N-2 CONTINGENCY													
ST-4	3 PH FLT TWO PV-WWG										PV500	1.04	2.0%	Stable and damped
ST-5	TWO PV GEN OUTAGE										MA500	0.84	24.0%	Stable and damped
ST-6	3 PH FLT @ PERKINS & PK-MD & 2 PV-WWG OUT										PV500	1.05	1.00%	Stable and well damped
ST-7	3 PH FLT PV W/PV-KY & PV-ESTRELLA OUT										KYRENE230	0.98	4.00%	Stable and well damped
ST-8	3 PH FLT PV W/PV-NG & PV-YUMAWEST OUT										DEVERS230	0.87	14.00%	Stable and well damped

PT- TABLE 1B
POST-TRANSIENT IMPACT
WITH NEW GENERATION TRANSFER TO THE WEST

BENCHMARK PRE-PROJECT SYSTEM	PV GEN TOTAL	KYR MVAR	230KV VOLT	PPK MVAR	230KV VOLT	WWG MVAR	230KV VOLT	LUGO MVAR	230KV VOLT	DEVERS MVAR	230KV VOLT	MIGUI MVAR	230KV VOLT	MALIN MVAR	500 VOLT	COMMENTS
BASE CASE (WATS2002HS01)	3991		1		1.02		1.03		0.99		1		1.004		1.08	
OUTAGE																
PALO VERDE-KYRENE OUT			0.97		1		1.01									Accepable
Q / V		910	0.782	1116	0.828	1678	0.868									
BOTH PALO VERDE-WWG OUT			0.99		1		1									Accepable
Q / V		1275	0.806	1397	0.795	1749	0.775									
TWO PALO VERDE GEN OUT															1.06	Acceptable
Q / V														698	0.985	>400 MVAR Limit
PALO VERDE-DEVERS OUT									0.97		1		0.99			Accepable
Q / V								1743	0.7	1004	0.723	469	0.914			
PALO VERDE-N.GILA OUT									0.97		0.99		1.03			Accepable
Q / V								1758	0.7	1149	0.705	459	0.94			

POST-PROJECTS ULTIMATE SYSTEM	PV GEN TOTAL	KYR MVAR	230KV VOLT	PPK MVAR	230KV VOLT	WWG MVAR	230KV VOLT	LUGO MVAR	230KV VOLT	DEVERS MVAR	230KV VOLT	MIGUI MVAR	230KV VOLT	MALIN MVAR	500 VOLT	COMMENTS
BASE CASE (ULT2002HS01W)	7826		1.02		1.03		1.04		1		1.01		0.99		1.08	
OUTAGE																
PALO VERDE-DEVERS OUT									0.98		0.99		0.97			Acceptable
Q / V								1865	0.7	1061	0.705	312	0.899			
PALO VERDE-N.GILA OUT									1		1		1			Acceptable
Q / V								2206	0.7	1453	0.7	605	0.905			
TWO PALO VERDE GEN OUT															1.07	Accepable
Q / V														1123	0.975	>>400 MVAR limit
BOTH PV-N.G. & PV-YUMA OUT									0.96		0.94		1.01			Acceptable
Q / V								1550	0.724	901	0.7	595	0.913			

SENSITIVITY OF LOWERING PV VOLTAGE	PV MVAR	500KV VOLT	PV MVAR	500KV VOLT	
BASE CASE		1.06		1.03	Acceptable Sufficient Var Margin
BOTH PALO VERDE-WWG OUT		1.052		1.019	
Q / V	3000	1	3000	0.95	

PF-TABLE 1C1

POWER FLOW IMPACT WITH NEW GENERATION TRANSFER TO ALL AREAS

CASE NO.	CASE DESCRIPTION / MAJOR LIMITING ELEMENT	(MW) EOR FLOW	(MW) PV GEN	(MW) NEW GEN	(AMP) PV-N.G.	(AMP) PV-YUMA	(AMP) PV-DV	(AMP) PV-WWG#1	(AMP) PV-WWG#2	(AMP) PV-KYR	(AMP) PV-EST	(PU) PPK 230KV	(PU) KYR 230KV	(PU) WWG 230KV	COMMENTS
	CONTINUOUS RATING				1400	1501	1900	3000	3000	2000	2000				
	EMERGENCY RATING				1890	2026	2430	3200	3200	2521	2521	5% MAX	5% MAX	5% MAX	
WATS-	**PRE-PROJECT BENCHMARK**														
2002HS 1	**BASE CASE (IN MW)**	**4954**	**3991**	**0**	**1100**		**1010**	**596**	**596**	**680**		**1.02**	**1.001**	**1.03**	
	BASE CASE FLOW(AMP)				1203		1101	663	663	766					NO PROBLEM
	% OF CONTINUOUS RATING				85.90%		45.30%	22.10%	22.10%	30.40%					
	OUTAGE CASE														
ALT A	PALO VERDE-KYRENE OUTAGE				1242		1163	1005	1005	OUT		1.001	0.97	1.02	NO PROBLEM
	% OF EMERGENCY RATING				65.70%		47.90%	31.40%	31.40%						
ALT B	ONE PALO VERDE-WWG OUTAGE				1236		1155	OUT	1108	890		1.01	1.001	1.02	NO PROBLEM
	% OF EMERGENCY RATING				65.40%		47.50%		34.60%	35.30%					
ALT C	PALO VERDE-DEVERS OUTAGE				1481		OUT	1016	1016	915		1.02	1.001	1.02	NO PROBLEM
	% OF EMERGENCY RATING				78.40%			31.80%	31.80%	36.30%					
ALT D	ONE PV-N. GILA OUTAGE				OUT		1530	996	996	912		1.02	1.001	1.02	NO PROBLEM
	% OF EMERGENCY RATING						63.00%	41.00%	41.00%	36.20%					
ULT	**POST-ULTIMATE SYSTEM**	**EOR FLOW**	**PV GEN**	**NEW GEN**	**PV-N.G.**	**PV-YUMA**	**PV-DV**	**PV-WWG#1**	**PV-WWG#2**	**PANDA-KYRENE**	**PV-EST**	**PPK 230KV**	**KYR 230KV**	**WWG 230KV**	**COMMENTS**
2002HS 01COM1	**BASE CASE (IN MW)**	**7304**	**3991**	**6950**	**941**	**1039**	**1545**	**1685**	**1685**	**1796**	**1221**	**1.03**	**1.01**	**1.03**	
	BASE CASE FLOW(AMP)				1039	1145	1714	1863	1863	2004	1387				LIMITED BY PANDA-KYRNE
	% OF CONTINUOUS RATING				73.90%	76.00%	90.20%	61.40%	61.40%	100.20%	69.40%				
ALT A	OUTAGE CASE														
	PALO VERDE-KYRENE OUTAGE				1113	1230	1858	2580	2580	OUT	1945	0.99	0.97	1	NO PROBLEM
	% OF EMERGENCY RATING				58.60%	60.50%	76.50%	78.70%	78.70%		77.20%				
ALT B	ONE PALO VERDE-WWG OUTAGE				1103	1218	1849	OUT	2988	2295	1654	1.02	1	1.02	NO PROBLEM
	% OF EMERGENCY RATING				58.00%	59.80%	76.10%		93.38%	91.04%	65.60%				
ALT C	PALO VERDE-DEVERS OUTAGE				1349	1511	OUT	2321	2321	2196	1536	1.02	1	1.02	NO PROBLEM
	% OF EMERGENCY RATING				70.00%	73.10%		72.53%	72.53%	87.11%	60.90%				
ALT D	PV-N. GILA OUTAGE				OUT	1972	1805	1927	1927	2034	1410	1.03	1.01	1.03	NO PROBLEM
	% OF EMERGENCY RATING					96.00%	74.28%	60.22%	60.22%	80.68%	55.90%				
ALT E	PV-ESTRELLA OUTAGE				1079	1192	1793	2338	2338	2411	OUT	1.01	0.99	1.01	NO PROBLEM
	% OF EMERGENCY RATING				56.90%	58.60%	73.79%	71.60%	71.60%	95.64%					
ALT F	PV-YUMAWEST OUTAGE				1891	OUT	1829	1943	1943	2041	1416	1.03	1.01	1.03	PV-NG @100.1% EMG RATING
	% OF EMERGENCY RATING				100.10%		75.27%	60.72%	60.72%	80.90%	56.20%				

PF-TABLE 1C2

POWER FLOW IMPACT WITH NEW GENERATION TRANSFER TO ALL AREAS

CASE NO.	CASE DESCRIPTION / MAJOR LIMITING ELEMENT	(MW) EOR FLOW	(MW) PV GEN	(MW) NEW GEN	(AMP) PV-N.G.	(AMP) PV-YUMA	(AMP) PV-DV	(AMP) PV-WWG#1	(AMP) PV-WWG#2	(AMP) PV-KYR	(AMP) PV-EST	(PU) PPK 230KV	(PU) KYR 230KV	(PU) WWG 230KV	COMMENTS
	CONTINUOUS RATING				1400	1501	1900	3000	3000	2000	2000				
	EMERGENCY RATING				1890	2026	2430	3200	3200	2521	2521	5% MAX	5% MAX	5% MAX	
WATS-	**PRE-PROJECT BENCHMARK**														
2002HS 1	**BASE CASE (IN MW)**	**4954**	**3991**	**0**	**1100**		**1010**	**596**	**596**	**680**		**1.02**	**1.001**	**1.03**	
	BASE CASE FLOW(AMP)				1203		1101	663	663	766					NO PROBLEM
	% OF CONTINUOUS RATING				85.90%		45.30%	22.10%	22.10%	30.40%					
	OUTAGE CASE														
ALT A	PALO VERDE-KYRENE OUTAGE				1242		1163	1005	1005	OUT		1.001	0.97	1.02	NO PROBLEM
	% OF EMERGENCY RATING				65.70%		47.90%	31.40%	31.40%						
ALT B	ONE PALO VERDE-WWG OUTAGE				1236		1155	OUT	1108	890		1.01	1.001	1.02	NO PROBLEM
	% OF EMERGENCY RATING				65.40%		47.50%		34.60%	35.30%					
ALT C	PALO VERDE-DEVERS OUTAGE				1481		OUT	1016	1016	915		1.02	1.001	1.02	NO PROBLEM
	% OF EMERGENCY RATING				78.40%			31.80%	31.80%	36.30%					
ALT D	ONE PV-N. GILA OUTAGE				OUT		1530	996	996	912		1.02	1.001	1.02	NO PROBLEM
	% OF EMERGENCY RATING						63.00%	41.00%	41.00%	36.20%					
ULT	**POST-ULTIMATE SYSTEM**	**EOR FLOW**	**PV GEN**	**NEW GEN**	**PV-N.G.**	**PV-YUMA**	**PV-DV**	**PV-WWG#1**	**PV-WWG#2**	**PANDA-KYRENE**	**PV-EST**	**PPK 230KV**	**KYR 230KV**	**WWG 230KV**	**COMMENTS**
2002HS 01COMB	**BASE CASE (IN MW)**	**7217**	**3991**	**6750**	**928**	**1024**	**1511**	**1631**	**1631**	**1777**	**1212**	**1.02**	**1**	**1.03**	
	BASE CASE FLOW(AMP)				1023	1126	1674	1805	1805	1988	1381				**NO PROBLEM**
	% OF CONTINUOUS RATING				72.80%	74.80%	88.10%	88.10%	88.10%	99.40%	69.10%				**WITHIN LIMIT**
ALT A	OUTAGE CASE														
	PALO VERDE-KYRENE OUTAGE				1088	1201	1804	2498	2498	OUT	1925	0.99	0.97	1	NO PROBLEM
	% OF EMERGENCY RATING				57.30%	59.00%	74.20%	75.90%	75.90%		76.30%				
ALT B	ONE PALO VERDE-WWG OUTAGE				1080	1192	1797	OUT	2876	2258	1634	1.02	1	1.02	NO PROBLEM
	% OF EMERGENCY RATING				56.80%	58.50%	74.00%		90.00%	89.57%	64.80%				
ALT C	PALO VERDE-DEVERS OUTAGE				1321	1479	OUT	2243	2243	2162	1520	1.02	1	1.02	NO PROBLEM
	% OF EMERGENCY RATING				68.60%	71.60%		68.70%	68.70%	85.76%	60.30%				
ALT D	PV-N. GILA OUTAGE				OUT	1937	1761	1865	1865	2014	1402	1.02	1	1.03	NO PROBLEM
	% OF EMERGENCY RATING					94.40%	72.47%	57.50%	57.50%	79.89%	55.60%				
ALT E	PV-ESTRELLA OUTAGE				1060	1169	1748	2272	2272	2386	OUT	1.01	0.99	1.01	NO PROBLEM
	% OF EMERGENCY RATING				55.80%	57.40%	71.93%	69.40%	69.40%	94.64%					
ALT F	PV-YUMAWEST OUTAGE				1859	OUT	1784	1879	1879	2019	1407	1.02	1	1.03	**NO PROBLEM**
	% OF EMERGENCY RATING				98.30%		73.40%	57.90%	57.90%	80.10%	55.80%				**WITHIN LIMIT**

TS-TABLE 1C1

STABILITY IMPACT WITH NEW GENERATION TRANSFER TO ALL AREAS

CASE NO.	PRE-PROJECT CASE DESCRIPTION	POWER FLOW (MW) SCIT FLOW	EOR FLOW	WOR FLOW	COI FLOW	PDCI FLOW	PVNG MARG	PVNG GEN	NEW GEN	PV/HSP TOT	STABILITY RESULTS BUS	Vdip	%	COMMENTS
2002HS	**BASE CASE**													
PRE-	**(WATS2002HS01M)**	**13443**	**5028**	**6008**	**4260**	**2516**	**7%**	**4283**	**0**	**4283**				
	N-1 CONTINGENCY													
ST-1	3 PH FLT PV-N. GILA										PV500	0.98	8.0%	Stable and well damped
ST-2	3 PH FLT PV-DEVERS										PV500	0.96	10.0%	Stable and well damped
ST-3	ONE PV GEN OUTAGE										PV500	1.04	2.0%	Stable and well damped
2002HS	**BASE CASE**													
PRE-	**(WATS2002HS01)**	**13376**	**4954**	**5937**	**4259**	**2516**	**0%**	**3991**	**0**	**3991**				
	N-2 CONTINGENCY													
ST-4	3 PH FLT TWO PV-WWG										PV500	0.92	14.0%	Stable and well damped
ST-5	TWO PV GEN OUTAGE										MA500	0.88	20.0%	Stable and well damped
ST-6	3 PH FLT @ PERKINS & PK-MD & 2 PV-WWG OUT										PV500	1.025	3.25%	Stable and well damped

CASE NO.	POST-ULTIMATE CASE DESCRIPTION	POWER FLOW (MW) SCIT FLOW	EOR FLOW	WOR FLOW	COI FLOW	PDCI FLOW	PVNG MARG	PVNG GEN	NEW GEN	PV/HSP TOT	STABILITY RESULTS BUS	Vdip	%	COMMENTS
2002HS	**BASE CASE**													
POST-	**(ULT2002HS01C1M)**	**12932**	**7377**	**6650**	**3102**	**2516**	**7%**	**4283**	**6950**	**11233**				
	N-1 CONTINGENCY													
ST-1	3 PH FLT PV-N. GILA										PV500	1.04	2.0%	Stable and well damped
ST-2	3 PH FLT PV-DEVERS										PV500	1.04	2.0%	Stable and well damped
ST-3	ONE PV GEN OUTAGE										PV500	1.04	2.0%	Stable and well damped
2002HS	**BASE CASE**													
POST-	**(ULT2002HS01C1)**	**12863**	**7304**	**6579**	**3103**	**2516**	**0%**	**3991**	**6950**	**10941**				
	N-2 CONTINGENCY													
ST-4	3 PH FLT TWO PV-WWG										PV500	0.90	16.0%	Unstable, collapsed in N.W.
ST-4A	3 PH FLT TWO PV-WWG (REDUCED 100MW TO UT	**12895**	**7265**	**6547**	**3163**	**2516**	**0%**	**3991**	**6850**	**10841**	PV500	0.92	14.0%	Unstable, collapsed in N.W.
ST-4B	3 PH FLT TWO PV-WWG (REDUCED 100MW TO AZ	**12893**	**7220**	**6512**	**3196**	**2516**	**0%**	**3991**	**6850**	**10841**	PV500	0.92	14.0%	Unstable, collapsed in N.W.
ST-5	TWO PV GEN OUTAGE										MA500	0.90	18.0%	Stable and damped
ST-6	3 PH FLT @ PERKINS & PK-MD & 2 PV-WWG OUT										PV500	1.02	4.00%	Stable and well damped
ST-7	3PH FLT PV W/ PV-KY & PV-ESTRELL OUT										KYRENE230	0.86	15.00%	Stable and well damped
ST-8	3PH FLT PV W/ PV-NG & PV-YUMAWEST OUT										DEVERS230	0.84	16.00%	Stable and well damped

TS-TABLE 1C2

STABILITY IMPACT WITH NEW GENERATION TRANSFER TO ALL AREAS

CASE NO.	PRE-PROJECT CASE DESCRIPTION	POWER FLOW (MW) SCIT FLOW	EOR FLOW	WOR FLOW	COI FLOW	PDCI FLOW	PV GEN MARG	PVNG GEN	NEW GEN	PV/HSP TOT	STABILITY RESULTS BUS	Vdip	%	COMMENTS
2002HS	BASE CASE													
PRE-	(WATS2002HS01M)	13443	5028	6008	4260	2516	7%	4283	0	4283				
	N-1 CONTINGENCY													
ST-1	3 PH FLT PV-N. GILA										PV500	0.98	8.0%	Stable and well damped
ST-2	3 PH FLT PV-DEVERS										PV500	0.96	10.0%	Stable and well damped
ST-3	ONE PV GEN OUTAGE										PV500	1.04	2.0%	Stable and well damped
2002HS	BASE CASE													
PRE-	(WATS2002HS01)	13376	4954	5937	4259	2516	0%	3991	0	3991				
	N-2 CONTINGENCY													
ST-4	3 PH FLT TWO PV-WWG										PV500	0.92	14.0%	Stable and well damped
ST-5	TWO PV GEN OUTAGE										MA500	0.88	20.0%	Stable and well damped
ST-6	3 PH FLT @ PERKINS & PK-MD & 2 PV-WWG OUT										PV500	1.025	3.25%	Stable and well damped

CASE NO.	POST-ULTIMATE CASE DESCRIPTION	POWER FLOW (MW) SCIT FLOW	EOR FLOW	WOR FLOW	COI FLOW	PDCI FLOW	PV GEN MARG	PVNG GEN	NEW GEN	PV/HSP TOT	STABILITY RESULTS BUS	Vdip	%	COMMENTS
2002HS	BASE CASE													
POST-	(ULT2002HS01C2M)	12962	7290	6585	3196	2516	7%	4283	6750	11033				
	N-1 CONTINGENCY													
ST-1	3 PH FLT PV-N. GILA										PV500	1.04	2.0%	Stable and well damped
ST-2	3 PH FLT PV-DEVERS										PV500	1.04	2.0%	Stable and well damped
ST-3	ONE PV GEN OUTAGE										PV500	1.04	2.0%	Stable and well damped
2002HS	BASE CASE													
POST-	(ULT2002HS01C2)	12892	7217	6512	3196	2516	0%	3991	6750	10741				
	N-2 CONTINGENCY													
ST-4	3 PH FLT TWO PV-WWG										PV500	0.93	13.0%	Marginally stable and
											MA500	0.83	25.0%	damped
ST-5	TWO PV GEN OUTAGE										PV500	1.03	3.0%	Stable and damped
ST-6	3 PH FLT @ PERKINS & PK-MD & 2 PV-WWG OUT										MA500	0.9	18.00%	Stable and well damped
ST-7	3PH FLT PV W/ PV-KY & PV-ESTRELL OUT										KYRENE230	0.85	15.00%	Stable and well damped
ST-8	3PH FLT PV W/ PV-NG & PV-YUMAWEST OUT										DEVERS230	0.85	15.00%	Stable and well damped

TS-TABLE 1C2M

STABILITY IMPACT WITH NEW GENERATION TRANSFER TO ALL AREAS

VADLIDATION OF SYSTEM MODEL AND BASE CASE DATA

		POWER FLOW (MW)								STABILITY RESULTS			
CASE NO.	PRE_PROJECT CASE DESCRIPTION	SCIT FLOW	EOR FLOW	NE/SE FLOW	COI FLOW	PVNG MARG	PVNG GEN	NEW GEN	PV/HSP TOT	BUS	Vdip	%	COMMENTS
2002HS PRE-	BASE CASE (WATS2002HS01) N-2 CONTINGENCY	13776	4954	829	4259	0%	3991	0	3991				
ST-4	3 PH FLT TWO PV-WWG									PV500	0.92	14%	Stable and damped
										MA500	0.88	20%	
CASE NO.	POST-ULTIMATE CASE DESCRIPTION	SCIT FLOW	EOR FLOW	NE/SE FLOW	COI FLOW	PV GEN MARG	PVNG GEN	NEW GEN	PV/HSP TOT	BUS	Vdip	%	COMMENTS
2002HS POST-	BASE CASE (ULT2002HS01C2) N-2 CONTINGENCY	12892	7217	958	3196	0%	3991	6750	10741				
ST-4	3 PH FLT TWO PV-WWG									PV500	0.93	13%	Marginally stable and damped
										MA500	0.83	25%	Within voltage dip criteria
2002HS POST-	SENSITIVITY CASE (ULT2002HS01C2M) N-2 CONTINGENCY	12891	7216	957	3196	0%	3991	6750	10741				
ST-4	3 PH FLT TWO PV-WWG									PV500	0.93	13%	Marginally Stable
										MA500	0.85	23%	Within voltage dip criteria
POST-	(ULT2002HS01C3M) N-2 CONTINGENCY	12863	7300	846	3105	0%	3991	6850	10841	PV500	0.9	14%	Unstable
ST-4	3 PH FLT TWO PV-WWG									MA500	Collapsed		
CASE NO.	POST-ULTIMATE CASE DESCRIPTION	SCIT FLOW	EOR FLOW	NE/SE FLOW	COI FLOW	PV GEN MARG	PVNG GEN	NEW GEN	PV/HSP TOT	BUS	Vdip	%	COMMENTS
2000HS POST-	BASE CASE (ULT2000HS-PV30) N-2 CONTINGENCY	13716	6866	708	4033	0%	3991	6950	10941				
ST-4	3 PH FLT TWO PV-WWG									PV500	0.88	18%	Marginally stable and damped
										MA500	0.78	30%	Met voltage dip criteria
2000HS POST-	BASE CASE (ULT2000HS-PV31) N-2 CONTINGENCY	13718	6871	708	4033	0%	3991	7050	11041				
ST-4	3 PH FLT TWO PV-WWG									PV500	0.86	20%	Unstable
										MA500	Collapsed		
2000HS POST-	BASE CASE (ULT2000HS-PV32) N-2 CONTINGENCY	13735	6628	225	4518	0%	3991	6950	10941	PV500	0.87	19%	Unstable
ST-4	3 PH FLT TWO PV-WWG									MA500	0.74	34%	Exceeded voltage dip criteria
2000HS POST-	BASE CASE (ULT2000HS-PV33) N-2 CONTINGENCY	13730	6586	221	4546	0%	3991	6850	10841				
ST-4	3 PH FLT TWO PV-WWG									PV500	0.88	18%	Marginally stable and damped
										MA500	0.81	27%	Met voltage dip criteria

TS-TABLE 1C2S

STABILITY IMPACT WITH NEW GENERATION TRANSFER TO ALL AREAS

SENSITIVITY OF COI FLOWS AND/OR READJUSTING NE/SE FLOWS

CASE NO.	PRE_PROJECT CASE DESCRIPTION	POWER FLOW (MW) SCIT FLOW	EOR FLOW	NE/SE FLOW	COI FLOW	PV GEN MARG	PVNG GEN	NEW GEN	PV/HSP TOT	STABILITY RESULTS BUS	Vdip	%	COMMENTS
2002HS	BASE CASE	13776	4954	829	4259	0%	3991	0	3991				
PRE-	(WATS2002HS01)												
	N-2 CONTINGENCY												
ST-4	3 PH FLT TWO PV-WWG									PV500	0.92	14.0%	Stable and damped
										MA500	0.88	20.0%	

CASE NO.	POST-ULTIMATE CASE DESCRIPTION	POWER FLOW (MW) SCIT FLOW	EOR FLOW	NE/SE FLOW	COI FLOW	PV GEN MARG	PVNG GEN	NEW GEN	PV/HSP TOT	STABILITY RESULTS BUS	Vdip	%	COMMENTS
2002HS	BASE CASE	12892	7217	958	3196	0%	3991	6750	10741				
POST-	(ULT2002HS01C2)												
	N-2 CONTINGENCY												
ST-4	3 PH FLT TWO PV-WWG									PV500	0.93	13.0%	Marginally stable and damped
										MA500	0.83	25.0%	
2002HS	SENSITIVITY CASE												
POST-	(ULT2002HS01C2A1)	13893	7322	-295	4260	0%	3991	6750	10741				
	N-2 CONTINGENCY												
ST-4	3 PH FLT TWO PV-WWG									PV500	0.90	16.0%	Unstable
										MA500	Collapsed		
POST-	(ULT2002HS01C2A2)	13891	7299	-206	4275	0%	3991	6550	10541	PV500	0.92	14.0%	Marginally stable and damped
	N-2 CONTINGENCY									MA500	0.80	28.0%	Reduced new generation
ST-4	3 PH FLT TWO PV-WWG												by 200 MW
POST-	(ULT2002HS01C2A3)	13891	7315	-440	3789	0%	3991	6750	10741	PV500	0.90	16.0%	Marginally Unstable
	N-2 CONTINGENCY									MA500	0.74	34.0%	Exceeded voltage dip criteria
ST-4	3 PH FLT TWO PV-WWG												
POST-	(ULT2002HS01C2A4)	13891	7323	-434	3691	0%	3991	6750	10741	PV500	0.90	16.0%	Marginally stable and damped
	N-2 CONTINGENCY									MA500	0.76	32.0%	Reduced COI Flow by 600 MW
ST-4	3 PH FLT TWO PV-WWG												

PT- TABLE 1C1
POST-TRANSIENT IMPACT
WITH NEW GENERATION TRANSFER TO ALL AREAS

BENCHMARK PRE-PROJECT SYSTEM	PV GEN TOTAL	KYR MVAR	230KV VOLT	PPK MVAR	230KV VOLT	WWG MVAR	230KV VOLT	LUGO MVAR	230KV VOLT	DEVERS MVAR	230KV VOLT	MIGUI MVAR	230KV VOLT	MALIN MVAR	500 VOLT	COMMENTS
BASE CASE (WATS2002HS01)	3991		1		1.02		1.03		0.99		1		1.004		1.08	
OUTAGE																
PALO VERDE-KYRENE OUT			0.97		1		1.01									Accepable
Q / V		910	0.782	1116	0.828	1678	0.868									
BOTH PALO VERDE-WWG OUT			0.99		1		1									Accepable
Q / V		1275	0.806	1397	0.795	1749	0.775									
TWO PALO VERDE GEN OUT															1.06	Acceptable
Q / V														698	0.985	>400 MVAR Limit
PALO VERDE-DEVERS OUT									0.97		1		0.99			Accepable
Q / V								1743	0.7	1004	0.723	469	0.914			
PALO VERDE-N.GILA OUT									0.97		0.99		1.03			Accepable
Q / V								1758	0.7	1149	0.705	459	0.94			

POST-ULTIMATE SYSTEM	PV GEN TOTAL	KYR MVAR	230KV VOLT	PPK MVAR	230KV VOLT	WWG MVAR	230KV VOLT	LUGO MVAR	230KV VOLT	DEVERS MVAR	230KV VOLT	MIGUI MVAR	230KV VOLT	MALIN MVAR	500 VOLT	COMMENTS
BASE CASE (ULT2002HS01C2)	10941		1.01		1.03		1.03		1		1		0.99		1.08	
OUTAGE																
PALO VERDE-KYRENE OUT			0.97		0.99		1									Acceptable
Q / V		1030	0.754	1283	0.798	1926	0.821									
BOTH PALO VERDE-WWG OUT			0.95		0.99		1									Acceptable
Q / V		677	0.865	907	0.895	1129	0.895									
TWO PALO VERDE GEN OUT															1.08	Accepable
Q / V														1824	0.95	>>400 MVAR Limit
BOTH PV-KYR. & PV-ESTRL OUT			0.91		0.93		0.93									10% Voltage Dips
Q / V (LOAD SHED 100 MW IN PHX)		248	0.805	273	0.836	391	0.859									>103 MVAR Limit
PALO VERDE-DEVERS OUT									0.99		0.99		0.97			Accepable
Q/V								1997	0.7	1084	0.7	306	0.899			
PALO VERDE-N.GILA OUT									1		1		1			Accepable
Q/V								2286	0.7	1435	0.7	665	0.904			
BOTH PV-NG & PV-YUMA OUT									0.98		0.96		1			Accepable
Q / V								1801	0.7	1050	0.7	692	0.904			

BENCHMARK PRE-PROJECT SYSTEM	PV MVAR	500KV VOLT	PV MVAR	500KV VOLT	
BASE CASE		1.06		1.03	Acceptable Adequate Var Margin
BOTH PALO VERDE-WWG OUT		1.022		0.999	
Q / V	674	1	343	0.99	

PT- TABLE 1C2
POST-TRANSIENT IMPACT
WITH NEW GENERATION TRANSFER TO ALL AREAS

BENCHMARK PRE-PROJECT SYSTEM	PV GEN TOTAL	KYR MVAR	230KV VOLT	PPK MVAR	230KV VOLT	WWG MVAR	230KV VOLT	LUGO MVAR	230KV VOLT	DEVERS MVAR	230KV VOLT	MIGUI MVAR	230KV VOLT	MALIN MVAR	500 VOLT	COMMENTS
BASE CASE (WATS2002HS01)	3991		1		1.02		1.03		0.99		1		1.004		1.08	
OUTAGE																
PALO VERDE-KYRENE OUT			0.97		1		1.01									Accepable
Q / V		910	0.782	1116	0.828	1678	0.868									
BOTH PALO VERDE-WWG OUT			0.99		1		1									Accepable
Q / V		1275	0.806	1397	0.795	1749	0.775									
TWO PALO VERDE GEN OUT															1.06	Acceptable
Q / V														698	0.985	>400 MVAR Limit
PALO VERDE-DEVERS OUT									0.97		1		0.99			Accepable
Q / V								1743	0.7	1004	0.723	469	0.914			
PALO VERDE-N.GILA OUT									0.97		0.99		1.03			Accepable
Q / V								1758	0.7	1149	0.705	459	0.94			

POST-PROJECTS ULTIMATE SYSTEM	PV GEN TOTAL	KYR MVAR	230KV VOLT	PPK MVAR	230KV VOLT	WWG MVAR	230KV VOLT	LUGO MVAR	230KV VOLT	DEVERS MVAR	230KV VOLT	MIGUI MVAR	230KV VOLT	MALIN MVAR	500 VOLT	COMMENTS
BASE CASE (ULT2002HS01C2)	10741		1		1.02		1.03		1		1		0.99		1.08	
OUTAGE																
PALO VERDE-KYRENE OUT			0.96		0.99		1									Acceptable
Q / V		970	0.76	1203	0.802	1813	0.834									
BOTH PALO VERDE-WWG OUT			0.96		0.99		1									Acceptable
Q / V		944	0.825	1192	0.85	1512	0.85									
TWO PALO VERDE GEN OUT															1.07	Accepable
Q / V														1869	0.945	>>400 MVAR Limit
BOTH PV-KYR. & PV-ESTRL OUT			0.9		0.92		0.94									10% Voltage Dips
Q / V		158	0.815	176	0.847	261	0.878									>103 MVAR Limit
PALO VERDE-DEVERS OUT									0.99		0.99		0.97			Accepable
Q/V								1998	0.7	1101	0.7	347	0.899			
PALO VERDE-N.GILA OUT									1		1		1			Accepable
Q/V								2250	0.7	1472	0.7	562	0.899			
BOTH PV-NG & PV-YUMA OUT									0.98		0.96		1			Accepable
Q / V								1839	0.7	1100	0.7	695	0.903			

SENSITIVITY OF LOWERING PV VOLTAGE	PV MVAR	500KV VOLT	PV MVAR	500KV VOLT	
BASE CASE		1.06		1.03	Acceptable Sufficient Var Margin
BOTH PALO VERDE-WWG OUT		1.04		1.002	
Q / V	1117	0.99	539	0.99	

PF-TABLE 2

POWER FLOW IMPACT ON THE EOR TRANSFER CAPABILITY

CASE NO.	CASE DESCRIPTION BASE (WATS2002HS02) MAJOR LIMITING ELEMENT	(MW) EOR FLOW	(MW) SCIT FLOW	(AMP) P.V.-DEVR	(AMP) MOE-ELDO	(AMP) LIBTY-MEAD	(AMP) P.V.-N.GILA	(AMP) NAV-CRY. LK	(AMP) PERK-MEAD	(AMP) P.V.-YUMA	(PU) DEVR 230 KV	(PU) MEAD 230KV	(PU) LUGO 230KV	(PU) WWG 230KV	COMMENTS
	CONTINUOUS RATING			1900	1900	887	1400	1630	1430	1501					
	EMERGENCY RATING			2430	2750	1000	1890	2501	1930	2026	5% MAX	5% MAX	5% MAX	5% MAX	
	PRE-PROJECT BENCHMARK														
PRE-2	BASE CASE (WATS2002HS02)	**6576**	**14443**	**1453**	**1195**	**761**	**1403**	**1243**	**1432**		**0.99**	**1.02**	**0.98**	**1.03**	PV-NG @ 100.2% of S.C. Contin. Rating
	% OF CONTINUOUS RATING			76.47%	62.89%	85.79%	100.21%	76.26%	100.14%						
PRE-2A	P.V.-DEVERS OUTAGE			OUT	1517	851	1752	1479	1795		0.98	1.02	0.96	1.03	No Problems
	% OF EMERGENCY RATING				55.16%	85.10%	92.70%	59.14%	93.01%						
PRE-2B	P.V.-N. GILA OUTAGE			1841	1456	836	OUT	1435	1733		0.97	1.02	0.97	1.03	No Problems
	% OF EMERGENCY RATING			75.76%	52.95%	83.60%		57.38%	89.79%						
PRE-2C	NAVAJO-CRYSTAL OUTAGE			1576	1960	814	1472	OUT	1664		0.99	1.01	0.98	1.03	No Problems
	% OF EMERGENCY RATING			64.86%	71.27%	81.40%	77.88%		86.22%						
PRE-2D	CRYSTAL-MCCULLGH OUTAGE			1467	1282	765	1411	1108	1457		0.99	1.02	0.98	1.03	No Problems
	% OF EMERGENCY RATING			60.37%	46.62%	76.50%	74.66%	44.30%	75.49%						
PRE-2E	MOENKOPI-ELDORADO OUTAGE			1569 64.57	OUT	809	1467	1868	1663		0.99	1.01	0.98	1.03	No Problems
	% OF EMERGENCY RATING					80.90%	77.62%	74.69%	86.17%						
PRE-2F	PERKINS-MEAD OUTAGE			1713	1630	897	1548	1574	OUT		0.98	1.02	0.98	1.04	No Problems
	% OF EMERGENCY RATING			70.49%	59.27%	89.70%	81.90%	62.93%							
	POST-ULTIMATE SYSTEM														
POST-2	BASE CASE (ULT2002HS02)	**7576**	**15444**	**1656**	**1262**	**771**	**1026**	**1303**	**1437**	**1124**	**0.98**	**1.01**	**0.97**	**1.03**	**No Problems**
	% OF CONTINUOUS RATING			87.10%	65.90%	87.00%	73.90%	79.94%	100.49%	75.40%					
POST-2A	P.V.-DEVERS OUTAGE			OUT	1586	860	1322	1539	1791	1474	0.96	1.01	0.95	1.02	No Problems
	% OF EMERGENCY RATING				56.60%	86.00%	69.40%	61.50%	92.80%	72.10%					
POST-2B	P.V.-N. GILA OUTAGE			1743	1304	784	OUT	1334	1486	1950	0.98	1.01	0.97	1.03	No Problems
	% OF EMERGENCY RATING			71.70%	47.00%	78.40%		53.40%	76.99%	95.70%					
POST-2C	NAVAJO-CRYSTAL OUTAGE			1774	2060	824	1080	OUT	1677	1188	0.97	1	0.97	1.02	No Problems
	% OF EMERGENCY RATING			73.60%	74.60%	82.40%	57.40%		86.89%	58.80%					
POST-2D	CRYSTAL-MCCULLGH OUTAGE			1672	1371	776	1033	1136	1469	1132	0.98	1.01	0.97	1.03	No Problems
	% OF EMERGENCY RATING			68,8%	49.50%	77.60%	55.10%	45.42%	76.11%	56.20%					
POST-2E	MOENKOPI-ELDORADO OUTAGE			1767	OUT	819	1076	1957	1678	1180	0.97	1	0.97	1.02	No Problems
	% OF EMERGENCY RATING			72.70%		81.90%	57.20%	78.25%	86.94%	58.50%					
POST-2F	PERKINS-MEAD OUTAGE			1889	1690	901	1131	1630	OUT	1245	0.97	1.01	0.98	1.03	No Problems
	% OF EMERGENCY RATING			77.70%	61.10%	90.10%	60.00%	65.17%		61.50%					
POST-2G	PV-YUMAWEST OUTAGE			1765	1312	786	1886	1340	1496	OUT	0.98	1.01	0.97	1.03	PV-NG @ 99.8% of S.C. Emerg. Rating
	% OF EMERGENCY RATING			72.60%	47.20%	78.60%	99.80%	53.58%	77.50%						

TS-TABLE 2

STABILITY IMPACT ON THE EOR/SCIT TRANSFER CAPABILITY

CASE NO.	PRE-PROJECT CASE DESCRIPTION	POWER FLOW (MW) SCIT FLOW	EOR FLOW	WOR FLOW	M/V FLOW	COI FLOW	PDCI FLOW	PVNG MARG	PVNG GEN	NEW GEN	PV/HSP TOT	STABILITY RESULTS BUS	Vdip	%	COMMENTS
2002HS PRE-	BASE CASE (WATS2002HS02)	14443	6576	6267	2963	4350	2735	0%	3991	0	3991				
	N-1 CONTINGENCY														
ST-1	3 PH FLT PV-N. GILA											DEVERS230	0.91	9.0%	Stable and well damped
ST-2	3 PH FLT PV-DEVERS											DEVERS230	0.96	3.0%	Stable and well damped
ST-3	3 PH FLT MKP-ELDO											DEVERS230	0.97	2.0%	Stable and well damped
ST-4	3 PH FLT NAV-CRYSTAL											DEVERS230	0.96	3.0%	Stable and well damped
ST-5	3 PH FLT PERK-MEAD											DEVERS230	0.98	2.0%	Stable and well damped

CASE NO.	POST-ULTIMATE CASE DESCRIPTION	POWER FLOW (MW) SCIT FLOW	EOR FLOW	WOR FLOW	M/V FLOW	COI FLOW	PDCI FLOW	PVNG MARG	PVNG GEN	NEW GEN	PV/HSP TOT	STABILITY RESULTS BUS	Vdip	%	COMMENTS
2002HS POST-	BASE CASE (ULT2002HS02)	15444	7576	7267	2964	4346	2735	0%	3991	4300	8291				
	N-1 CONTINGENCY														
ST-1	3 PH FLT PV-N. GILA											DEVERS230	0.92	6.0%	Stable and well damped
ST-2	3 PH FLT PV-DEVERS											DEVERS230	0.94	4.0%	Stable and well damped
ST-3	3 PH FLT MKP-ELDO											DEVERS230	0.97	1.0%	Stable and well damped
ST-4	3 PH FLT NAV-CRYSTAL											DEVERS230	0.96	2.0%	Stable and well damped
ST-5	3 PH FLT PERK-MEAD											DEVERS230	0.97	1.0%	Stable and well damped
ST-6	3PH FLT PV-YUMAWEST											DEVERS230	0.92	6.0%	Stable and well damped

PT- TABLE 2
POST-TRANSIENT IMPACT
ON THE EOR/SCIT TRANSFER LIMITS

BENCHMARK PRE-PROJECT SYSTEM	EOR FLOW	SCIT TOTAL	MIRAL MVAR	500KV VOLT	VCTRV MVAR	500KV VOLT	DEVERS MVAR	230KV VOLT	LUGO MVAR	230KV VOLT	MIGUEL MVAR	230KV VOLT	SOTHBAY MVAR	69.0KV VOLT	MALIN MVAR	500 VOLT	COMMENTS
BASE CASE (WATS2002HS02)	6576	14443		1.04		1.05		0.99		0.98		1.002		1.001		1.08	
OUTAGE																	
PALO VERDE-DEVERS OUT				1.02		1.03		0.99		0.96		0.98		1.01			Accepable
Q / V			1433	0.864	1988	0.875	864	0.733	1517	0.741	341	0.915	298	0.857			
PALO VERDE-N.GILA OUT				1.02		1.03		0.96		0.96		1.02		1.02			Accepable
Q / V			1406	0.868	1925	0.885	910	0.717	1504	0.746	580	0.929	319	0.867			
IMPERIAL VA-MIGUEL OUT				1.01		1.03		0.96		0.96		0.98		1.01			Limiting Case
Q / V			1016	0.915	1534	0.92	753	0.782	1248	0.8	270	0.839	158	0.897		0.904	150 MVAR Limit
TWO PALO VERDE GEN OUT				1.03		1.05		1.0001		0.97		1.01		1.02		1.05	Accepable
Q / V			2030	0.838	2711	0.854	1248	0.707	1773	0.707	698	0.909	348	0.859	380	1.01	400 MVAR Limit
TWO SAN ONOFRE GEN OUT *				1.02		1.03		0.98		0.96		1		1.03		1.03	Accepable
Q / V			1028	0.894	1600	0.915	815	0.778	1262	0.786	442	0.916	357	0.869	357	0.869	
IPPDC OUT				1.03		1.03		0.98		0.96		1		1.02		1.08	Acceptable
Q / V			2080	0.824	2869	0.84	1173	0.7	1760	0.7	543	0.913	321	0.863	1216	0.98	

POST-PROJECTS POST-ULTIMATE SYSTEM	EOR FLOW	SCIT TOTAL	MIRAL MVAR	500KV VOLT	VCTRV MVAR	500KV VOLT	DEVERS MVAR	230KV VOLT	LUGO MVAR	230KV VOLT	MIGUEL MVAR	230KV VOLT	SOTHBAY MVAR	69.0KV VOLT	MALIN MVAR	500 VOLT	COMMENTS
BASE CASE (ULT2002HS02)	7576	15444		1.04		1.04		0.98		0.97		0.99		1.02		1.08	
OUTAGE																	
PALO VERDE-DEVERS OUT				1.03		1.03		0.97		0.96		0.97		1.01			Acceptable
Q / V			1443	0.871	1993	0.879	864	0.717	1535	0.743	350	0.9	270	0.853			
PALO VERDE-N.GILA OUT				1.03		1.04		0.98		0.97		0.99		1.02			Acceptable
Q / V			2212	0.82	2803	0.845	1260	0.7	1884	0.7	563	0.896	319	0.859			
IMPERIAL VA-MIGUEL OUT				1.04		1.05		0.98		0.98		0.99		1.02			Acceptable
Q / V			2374	0.825	2982	0.838	1310	0.7	1951	0.7	630	0.892	319	0.859			>>150 MVAR Limit
TWO PALO VERDE GEN OUT				1.04		1.05		1		0.97		1.01		1.02		1.06	Accepable
Q / V			2256	0.82	2892	0.84	1401	0.7	1827	0.7	753	0.893	344	0.859	817	0.995	>>400 MVAR Limit
TWO SAN ONOFRE GEN OUT *				1.02		1.03		0.96		0.96		0.98		1.02		1.08	Acceptable
Q / V			1045	0.899	1604	0.915	824	0.764	1280	0.787	431	0.903	326	0.863	1672	0.965	
IPPDC OUT				1.03		1.03		0.97		0.97		0.99		1.01		1.08	Acceptable
Q / V			2111	0.835	2875	0.832	1205	0.7	1794	0.7	554	0.895	316	0.853	1424	0.97	
BOTH PV-N.G. & PV-YUMA OUT				1		1.01		0.93		0.95		1.01		1.02			Acceptable
Q / V			875	0.89	1198	0.905	627	0.74	1045	0.794	664	0.909	339	0.859			

PF-TABLE 3

POWER FLOW IMPACT ON THE ARIZONA EHV SYSTEM

CASE NO.	CASE DESCRIPTION / MAJOR LIMITING ELEMENT	(MW) EOR FLOW	(MW) PV GEN	(MW) NEW GEN	(AMP) PV-N.G.	(AMP) PV-YUMA	(AMP) PV-DV	(AMP) PV-WWG	(AMP) PV-WWG	(AMP) PV-KYR	(AMP) PV-EST	(PU) DEVERS 230 KV	(PU) PPK 230KV	(PU) KYR 230KV	(PU) WWG 230KV	COMMENTS
	CONTINUOUS RATING				1400	1501	1900	3000	3000	2000	2000					
	EMERGENCY RATING				1890	2026	2430	3200	3200	2521	2521	5% MAX	5% MAX	5% MAX	5% MAX	
WATS-2002HS3	PRE-PROJECT BENCHMARK															
	BASE CASE (IN MW)	4546	3991	0	1036		894	620	620	813		1.001	1.001	0.99	1.02	
	BASE CASE FLOW(AMP)				1131		974	709	709	938						NO PROBLEM
	% OF CONTINUOUS RATING				80.79%		51.26%	23.63%	23.63%	46.90%						
	OUTAGE CASE															
ALT A	PALO VERDE-KYRENE OUTAGE				1178		1048	1137	1137	OUT		1.001	0.97	0.94	1.001	5% VOLT DIP ACCEPTABLE
	% OF EMERGENCY RATING				62.30%		43.10%	35.50%	35.50%							
ALT B	ONE PALO VERDE-WWG OUTAGE				1165		1031	OUT	1041	1070		1.001	0.99	0.98	1.01	NO PROBLEM
	% OF EMERGENCY RATING				61.60%		42.40%		32.50%	42.40%						

ULT	CASE DESCRIPTION / POST-ULTIMATE SYSTEM	(MW) EOR FLOW	(MW) PV GEN	(MW) NEW GEN	(AMP) PV-N.G.	(AMP) PV-YUMA	(AMP) PV-DV	(AMP) PV-WWG	(AMP) PV-WWG	(AMP) PANDA-KYRNE	(AMP) PV-EST	(PU) DEVERS 230 KV	(PU) PPK 230KV	(PU) KYR 230KV	(PU) WWG 230KV	COMMENTS
	CONTINUOUS RATING				1400	1501	1900	3000	3000	2000	2000					
	EMERGENCY RATING				1890	2026	2430	3200	3200	2521	2521	5% MAX	5% MAX	5% MAX	6% MAX	
2002HS3	BASE CASE (IN MW)	6397	3991	6400	849	934	1380	1578	1578	1785	1259	1	1.02	1	1.02	
	BASE CASE FLOW(AMP)				928	1021	1523	1760	1760	2003	1443					LIMITED BY PANDA-KYR
	% OF CONTINUOUS RATING				66.40%	68.10%	80.10%	57.70%	57.70%	100.10%	72.20%					
ALT A	OUTAGE CASE															
	PALO VERDE-KYRENE OUTAGE				997	1100	1659	2491	2491	OUT	2020	0.99	0.98	0.95	0.99	5% VOLT DIP ACCEPTABLE
	% OF EMERGENCY RATING				52.80%	54.40%	68.30%	68.30%	68.30%		80.10%					
ALT B	ONE PALO VERDE-WWG OUTAGE				983	1084	1641	OUT	2804	2283	1701	1	1.01	0.99	1.01	NO PROBLEM
	% OF EMERGENCY RATING				52.00%	53.50%	67.60%		87.60%	90.56%	67.50%					
ALT C	PALO VERDE-ESTRELLA OUTAGE				966	1064	1597	2263	2263	2441	OUT	1	1	0.98	1	NO PROBLEM
	% OF EMERGENCY RATING				51.10%	52.60%	65.70%	68.70%	68.70%	96.80%						

TS-TABLE 3

STABILITY IMPACT ON THE ARIZONA EHV SYSTEM

CASE NO.	PRE-PROJECT CASE DESCRIPTION	POWER FLOW (MW) SCIT FLOW	EOR FLOW	WOR FLOW	COI FLOW	PDCI FLOW	PVNG MARG	PVNG GEN	NEW GEN	PV/HSP TOT	STABILITY RESULTS BUS	Vdip	%	COMMENTS
2002HS PRE-	**BASE CASE (WATS2002HS03) N-2 CONTINGENCY**	**12880**	**4546**	**5462**	**4254**	**2516**	**0%**	**3991**	**0**	**3991**				
ST-1	3 PH FLT TWO PV-WWG										PV500	0.94	12.0%	Stable and well damped
ST-2	TWO PV GEN OUTAGE										PV500 MA500	1.01 0.89	5.0% 19.0%	Stable and well damped

CASE NO.	POST-ULTIMATE CASE DESCRIPTION	POWER FLOW (MW) SCIT FLOW	EOR FLOW	WOR FLOW	COI FLOW	PDCI FLOW	PVNG MARG	PVNG GEN	NEW GEN	PV/HSP TOT	STABILITY RESULTS BUS	Vdip	%	COMMENTS
2002HS POST-	**BASE CASE (ULT2002HS03) N-2 CONTINGENCY**	**13410**	**6397**	**7137**	**3093**	**2516**	**0%**	**3991**	**6400**	**10391**				
ST-1	3 PH FLT TWO PV-WWG										PV500	0.95	11.0%	Stable and well damped
ST-2	TWO PV GEN OUTAGE										PV500 MA500	1.03 0.92	3.0% 16.0%	Stable and well damped
ST-3	3PH FLT PV W/ PV-KY & PV-ESTRELL OUT										PV500 KYRENE2:	0.95 0.85	11.00% 14.00%	Stable and well damped

PT- TABLE 3

POST-TRANSIENT IMPACT ON THE ARIZONA EHV SYSTEM

BENCHMARK PRE-PROJECT SYSTEM	P.V. GEN NET	P.V. EAST	KYREN MVAR	230 KV VOLT	PNPK MVAR	230 KV VOLT	SKG MVAR	230KV VOLT	WWG MVAR	230KV VOLT	MALIN MVAR	500 KV VOLT	COMMENTS
BASE CASE (WATS2002HS03)	3991	2053		0.99		1.0001		1.0001		1.02		1.08	
OUTAGE													
PALO VERDE-KYRENE OUT				0.94		0.96		0.94		1			5% Voltage Dip
Q / V			398	0.824	468	0.861	359	0.767	797	0.915			Acceptable
TWO PALO VERDE-WWG OUT				0.97		0.97		0.98		0.98			Accepable
Q / V			798	0.835	814	0.82	721	0.733	1080	0.83			
TWO PALO VERDE GEN OUT				0.95		0.95		0.95		0.98		1.05	Accepable
Q / V			256	0.867	248	0.871	248	0.84	344	0.914	539	0.995	

IMPACT OF POST-ULTIMATE SYSTEM	P.V. GEN NET	P.V. EAST	KYREN MVAR	230 KV VOLT	PNPK MVAR	230 KV VOLT	SKG MVAR	230KV VOLT	WWG MVAR	230KV VOLT	MALIN MVAR	500 KV VOLT	COMMENTS
BASE CASE (ULT2002HS03)	10391	6200		1		1.02		1.02		1.02		1.08	
OUTAGE													
PANDA-KYRENE OUT				0.95		0.97		0.97		0.98			5% Voltage Dip
Q / V			750	0.78	912	0.819	652	0.721	1434	0.84			Acceptable
TWO PALO VERDE-WWG OUT				0.95		0.98		0.97		0.99			Acceptable
Q / V			921	0.78	1117	0.809	819	0.7	1466	0.809			
TWO PALO VERDE GEN OUT				1		1.01		1.02		1.02		1.08	Acceptable
Q / V			1975	0.736	2169	0.725	1105	0.7	3000	0.738	1772	0.955	
PV-KYR & PV-ESTR OUT*				0.9		0.92		0.93		0.92			10% Voltage Di
Q / V			173	0.823	180	0.841	180	0.825	255	0.865			Acceptable

SENSITIVITY OF LOWERING PV VOLTAGE	PV MVAR	500KV VOLT	PV MVAR	500KV VOLT	
BASE CASE		1.06		1.03	Acceptable Sufficient Var Margin
TWO PALO VERDE-WWG OUT		1.033		1.007	
Q / V	1501	0.98	1437	0.97	

*RAS Load shedding of 200 MW in the Phoeni metropolitan area

TS-TABLE 4

STABILITY IMPACT ON THE PALO VERDE PLANT WITH ONLY ONE GENERATOR IN-SERVICE

CASE NO.	PRE-PROJECT CASE DESCRIPTION	POWER FLOW (MW) SCIT FLOW	EOR FLOW	WOR FLOW	COI FLOW	PDCI FLOW	PVNG MARG	PVNG GEN	NEW GEN	PV/HSP TOT	STABILITY RESULTS BUS	Vdip	%	POST	COMMENTS
2002HS PRE-	BASE CASE (WATS2002HS04M) N-1 CONTINGENCY	12701	4163	5225	4301	2516	7%	1467	0	1467					
ST-1	3 PH FLT PV-N. GILA										PV500	1.03	3.5%	1.06	Stable and well damped
ST-2	3 PH FLT PV-DEVERS										PV500	1.02	4.0%	1.06	Stable and well damped
ST-3	ONE PV GEN OUTAGE										PV500	1.01	5.0%	1.03	Stable and well damped

CASE NO.	POST-ULTIMATE CASE DESCRIPTION	POWER FLOW (MW) SCIT FLOW	EOR FLOW	WOR FLOW	COI FLOW	PDCI FLOW	PV GEN MARG	PVNG GEN	NEW GEN	PV/HSP TOT	STABILITY RESULTS BUS	Vdip	%	POST	COMMENTS
2002HS POST-EAST	BASE CASE (ULT2002HS04EM) N-1 CONTINGENCY	12708	5713	6455	3069	2516	7%	1467	6500	7967					
ST-1	3 PH FLT PV-N. GILA										PV500	1.05	1.0%	1.06	Stable and well damped
ST-2	3 PH FLT PV-DEVERS										PV500	1.05	1.0%	1.06	Stable and well damped
ST-3	ONE PV GEN OUTAGE										PV500	1.04	1.0%	1.06	Stable and well damped

CASE NO.	POST-ULTIMATE CASE DESCRIPTION	POWER FLOW (MW) SCIT FLOW	EOR FLOW	WOR FLOW	COI FLOW	PDCI FLOW	PV GEN MARG	PVNG GEN	NEW GEN	PV/HSP TOT	STABILITY RESULTS BUS	Vdip	%	POST	COMMENTS
2002HS POST-WEST	BASE CASE (ULT2002HS04WM) N-1 CONTINGENCY	13452	6940	6440	4279	2516	7%	1467	5857	7324					
ST-1	3 PH FLT PV-N. GILA										PV500	1.05	1.0%	1.06	Stable and well damped
ST-2	3 PH FLT PV-DEVERS										PV500	1.05	1.0%	1.05	Stable and well damped
ST-3	ONE PV GEN OUTAGE										PV500	1.05	1.0%	1.06	Stable and well damped

CASE NO.	POST-ULTIMATE CASE DESCRIPTION	SCIT FLOW	EOR FLOW	WOR FLOW	COI FLOW	PDCI FLOW	PV GEN MARG	PVNG GEN	NEW GEN	PV/HSP TOT	BUS	Vdip	%	POST	COMMENTS
2002HS POST-COMBIN	BASE CASE (ULT2002HS04CM) N-1 CONTINGENCY	12186	6464	5747	3259	2516	7%	1467	6750	8217					
ST-1	3 PH FLT PV-N. GILA										PV500	1.05	1.0%	1.06	Stable and well damped
ST-2	3 PH FLT PV-DEVERS										PV500	1.05	1.0%	1.05	Stable and well damped
ST-3	ONE PV GEN OUTAGE										PV500	1.05	1.0%	1.06	Stable and well damped

TS-TABLE 5

STABILITY IMPACT ON THE EOR/SCIT/COI SIMULTANEOUS TRANFER LIMITS

CASE NO.	PRE-PROJECT CASE DESCRIPTION	POWER FLOW (MW) SCIT FLOW	EOR FLOW	WOR FLOW	M/V FLOW	COI FLOW	PDCI FLOW	PVNG MARG	PVNG GEN	NEW GEN	PV/HSP TOT	STABILITY RESULTS BUS	Vdip	%	COMMENTS
2002HS PRE-	BASE CASE (WATS2002HS02) N-1 CONTINGENCY	14443	6576	6267	2963	4350	2735	0%	3991	0	3991				
IMPACT ON COI SIMULTANEOUS TRF															
ST-7	TWO PV GEN OUTAGE											MALIN500	0.76	32.00%	Marginally stable Slightly exceeded vlotage dip criteria
ST-8	3PH FLT 2 PV-WWG OUT											PV500	0.89	17.00%	Stable and damped
												MALIN500	1	8.00%	

CASE NO.	POST-ULTIMATE CASE DESCRIPTION	POWER FLOW (MW) SCIT FLOW	EOR FLOW	WOR FLOW	M/V FLOW	COI FLOW	PDCI FLOW	PV GEN MARG	PVNG GEN	NEW GEN	PV/HSP TOT	STABILITY RESULTS BUS	Vdip	%	COMMENTS
2002HS POST-	BASE CASE (ULT2002HS02) N-1 CONTINGENCY	15444	7576	7267	2964	4346	2735	0%	3991	4300	8291				
IMPACT ON COI SIMULTANEOUS TRF															
ST-7	TWO PV GEN OUTAGE											MALIN500	0.81	27.00%	Stable and damped
ST-8	3PH FLT 2 PV-WWG OUT											PV500	1.04	2.00%	Stable and damped
												MALIN500	1	8.00%	
ST-9	3PH FLT PV WITH PV-NG & PV-YUMAWEST OUT											PV500	1.04	2.0%	Stable and damped
												DEVERS2:	0.85	13.0%	
ST-10	3PH FLT PV WITH PV-KY & PV-ESTRELLA OUT											PV500	1.03	3.0%	Stable and damped
												KYRENE2:	0.88	12.0%	

TS-Table 6
Palo Verde Reactive Power Sensitivity Study
(For The Two Palo Verde-Westwing Circuits Outage)

System Conditions Generation Output	Pre-Projects Benchmark Existing System Output	Independent Var Control Ultimate System Output	Increasing New Var Output Ultimate System Output	Central VAR Control Ultimate System Output	Matched PVNGS Var Ultimate System Output
Case I. D.	WATS2002HS01 (PGEN / QGEN)	ULT2002HS01C2 (PGEN / QGEN)	ULT2002HS01C2V1 (PGEN / QGEN)	ULT2002HS01C2V2 (PGEN / QGEN)	ULT2002HS01C2V3 (PGEN / QGEN)
PV GEN Capability (4186 MW/ 2005 MVAR)	4186 MW/ 1186 MVAR	4186 MW/ 1408 MVAR	4186 MW/ 697 MVAR	4186 MW/ 951 MVAR	4186 MW/ 1195 MVAR
HGC Project Capability (1112 MW/ 580 MVAR)		1100 MW/ 338 MVAR	1100 MW/ 88 MVAR	1100 MW/ 222 MVAR	1100 MW/ 337 MVAR
DEM Project Capability (1200 MW/ 739 MVAR)		1100 MW/ 430 MVAR	1100 MW/ 551 MVAR	1100 MW/ 333 MVAR	1100 MW/ 431 MVAR
SEM Project Capability (1193 MW/ 738 MVAR)		1000 MW/ 417 MVAR	1000 MW/ 551 MVAR	1000 MW/ 333 MVAR	1000 MW/ 417 MVAR
RED Project Capability (2160 MW/ 952 MVAR)		1672 MW/ 338 MVAR	1672 MW/ 671 MVAR	1672 MW/ 536 MVAR	1672 MW/ 338 MVAR
PAN Project Capability (2144 MW/ 1332 MVAR)		1322 MW/ 120 MVAR	1322 MW/ 501 MVAR	1322 MW/ 468 MVAR	1322 MW/ 276 MVAR
PDE Project Capability (775 MW/ 479 MVAR)		750 MW/ 10 MVAR	750 MW/ 45 MVAR	750 MW/ 222 MVAR	750 MW/ 66 MVAR
Total New Gen Capability (8190 MW/ 4820 MVAR)		**(6750 MW/ 1653 MVAR)**	**(6750 MW/ 2407 MVAR)**	**(6750 MW/ 2114 MVAR)**	**(6750 MW/ 1865 MVAR)**
Total VAR Output	**1186 MVAR**	**3062 MVAR**	**3104 MVAR**	**3065 MVAR**	**3060 MVAR**
Stability Results					
Voltage Dip @ PV 500 KV	0.92 p.u.	0.93 p.u.	0.92 p.u.	0.93 p.u.	0.92 p.u.
Voltage Dip @ MA 500 KV	1.02 p.u.	0.83 p.u.	0.81 p.u.	0.83 p.u.	0.81 p.u.
Case Comments	Stable	Stable	Stable	Stable	Stable

TS-TABLE 7

PALO VERDE OPERATING VOLTAGE SENSITIVITY

CASE NO.	BASE CASE POST-ULTIMATE CASE DESCRIPTION	POWER FLOW (MW) SCIT FLOW	EOR FLOW	WOR FLOW	COI FLOW	PDCI FLOW	PVNG MARG	PVNG GEN	NEW GEN	PV/HSP TOT	STABILITY RESULTS BUS	Vdip	%	COMMENTS
2002HS	(ULT2002HS01C2)	12892	7217	6512	3196	2516	0%	3991	6750	10741				
Normal	PV @ 530KV(1.06PU)													
ST-4	3 PH FLT TWO PV-WWG										PV500	0.93	13.0%	Stable and damped
											MA500	0.83	25.0%	
ST-6	3 PH FLT @ PERKINS & PK-MD & 2 PV-WWG OUT										PV500	1.03	3.00%	Stable and well damped
2002HS	SENSITIVITY													
POST-	(ULT2002HS01C2V4)	12893	7217	6509	3199	2516	0%	3991	6750	10741				
Down 5KV	PV @525KV(1.05PU)													
ST-4	3 PH FLT TWO PV-WWG										PV500	0.899-	15.00%	Unstable
											MA500	Collapsed		
	(ULT2002HS01C3V4)	12893	7213	6508	3199	2516	0%	3991	6650	10641 (-100)				
Down 5KV	PV @525KV(1.05PU)													
ST-4	3 PH FLT TWO PV-WWG										PV500	0.9001+	15.00%	Unstable
											MA500	Collapsed		
	(ULT2002HS01C4V4)	12892	7209	6508	3201	2516	0%	3991	6550	10541 (-200)				
Down 5KV	PV @525KV(1.05PU)													
ST-4	3 PH FLT TWO PV-WWG										PV500	0.91	14.00%	stable and well damped
											MA500	0.82		
POST-	(ULT2002HS01C2V5)	12864	7304	6582	3103	2516	0%	3991	6950	10941 (+200)				
Up 5KV	PV @535KV(1.07PU)													
ST-4	3 PH FLT TWO PV-WWG										PV500	0.92	15.00%	Unstable
											MA500	Collapsed		
POST-	(ULT2002HS01C5V5)	12864	7301	6582	3104	2516	0%	3991	6850	10841 (+100)				
Up 5KV	PV @535KV(1.07PU)													
ST-4	3 PH FLT TWO PV-WWG										PV500	0.93	14.00%	Unstable
											MA500	Collapsed		
	(ULT2002HS01C6V4)	12863	7299	6581	3204	2516	0%	3991	6800	10791 (+50)				
UP 5KV	PV @535KV(1.07PU)													
ST-4	3 PH FLT TWO PV-WWG										PV500	0.942	13.00%	stable and well damped
											MA500	0.84		

TS-TABLE 8

STABILITY IMPACT ON THE PALO VERDE PLANT UNDER MAXIMUM BUCKING OR BOOSTING CONDITIONS

			MAXIMUM BUCKING REACTIVE POWER FLOW (MVAR)							STABILITY RESULTS				
CASE NO.	CASE DESCRIPTION	EOR MW	PV QGEN MVAR	PV QMIN MVAR	RED QGEN MVAR	RED QMIN MVAR	PV GEN TO PV 500 KV	REDHW TO PV 500 KV	TWO PV TO WWG 500 KV	BUS	Base	Vdip	%	COMMENTS
PRE-	(APS2003-BUCK)	1833	-212	-1528			-1013		-673					
ST-6	3 PH FLT PERKINS 500KV PK-MD &2 PV-WWG OUT									PV500	1.05	0.81	24.0%	Stable and well damped
POST-	(RED2003-BUCK)	2320	329	-1528	-155	-200	-444	-386	-600					
ST-6	3 PH FLT PERKINS 500KV PK-MD &2 PV-WWG OUT									PV500	1.05	0.89	16.0%	Stable and well damped
POST-	(RED2003-BUCK-A)	2319	-504	-1528	753	-200	-1331	500	-600					
ST-6A	3 PH FLT PERKINS 500KV PK-MD &2 PV-WWG OUT									PV500	1.05	0.85	20.0%	Stable and well damped

			MAXIMUM BOOSTING REACTIVE POWER FLOW (MVAR)							STABILITY RESULTS				
CASE NO.	CASE DESCRIPTION	EOR MW	PV QGEN MVAR	PV QMAX MVAR	RED QGEN MVAR	RED QMAX MVAR	PV GEN TO PV 500 KV	REDHW TO PV 500 KV	TWO PV TO WWG 500 KV	BUS	Base	Vdip	%	COMMENTS
PRE-	(APS2003-BOOST)	2395	2019	2019			1223		727					
ST-6	3 PH FLT PERKINS 500 KV PK-MD &2 PV-WWG OUT									PV500	1.07	1.06	1.0%	Stable and well damped
ST-4	3 PH FLT PV 500 KV TWO PV-WWG CKTS OUT									PV500	1.07	0.99	8.0%	Stable and well damped
POST-	(RED2003-BOOST)	2848	1724	2019	584	952	951	349	731					
ST-6	3 PH FLT PERKIN-MEAD PK-MD &2 PV-WWG OUT									PV500	1.07	1.06	1.0%	Stable and well damped
ST-4	3 PH FLT PV 500 KV TWO PV-WWG CKTS OUT									PV500	1.07	1.00	7.0%	Stable and well damped
POST-	(RED2003-BOOST-A)	2830	2019	2019	-111	952	1191	-341	484					
ST-6A	3 PH FLT PERKIN-MEAD PK-MD &2 PV-WWG OUT									PV500	1.04	1.01	3.0%	Stable and well damped
ST-4A	3 PH FLT PV 500 KV TWO PV-WWG CKTS OUT									PV500	1.04	0.94	10.0%	Stable and well damped

PF-TABLE 4

POWER FLOW IMPACT ON THE PALO VERDE TRANSFER CAPABILITY WITH PV-ESTRELLA AND UPGRADE OF PV-KYRENE AND PV-N.GILA LINES

CASE NO.	CASE DESCRIPTION / MAJOR LIMITING ELEMENT	(MW) EOR FLOW	(MW) PV GEN	(MW) NEW GEN	(AMP) PV-N.G.	(AMP) PV-YUMA	(AMP) PV-DV	(AMP) PV-WWG#1	(AMP) PV-WWG#2	(AMP) PV-KYR	(AMP) PV-EST	(PU) PPK 230KV	(PU) KYR 230KV	(PU) WWG 230KV	COMMENTS
	CONTINUOUS RATING				1400	1501	1900	3000	3000	2000	2000				
	EMERGENCY RATING				1890	2026	2430	3200	3200	2501	2521	5% MAX	5% MAX	5% MAX	
WATS-	**PRE-PROJECT BENCHMARK**														
2002HS 1	**BASE CASE (IN MW)**	**4954**	**3991**	**0**	**1100**		**1010**	**596**	**596**	**680**		**1.02**	**1.001**	**1.03**	
	BASE CASE FLOW(AMP)				1203		1101	663	663	766					NO PROBLEM
	% OF CONTINUOUS RATING				85.90%		45.30%	22.10%	22.10%	30.40%					
	OUTAGE CASE														
ALT A	PALO VERDE-KYRENE OUTAGE				1242		1163	1005	1005	OUT		1.001	0.97	1.02	NO PROBLEM
	% OF EMERGENCY RATING				65.70%		47.90%	31.40%	31.40%						
ALT B	ONE PALO VERDE-WWG OUTAGE				1236		1155	OUT	1108	890		1.01	1.001	1.02	NO PROBLEM
	% OF EMERGENCY RATING				65.40%		47.50%		34.60%	35.30%					
ALT C	PALO VERDE-DEVERS OUTAGE				1481		OUT	1016	1016	915		1.02	1.001	1.02	NO PROBLEM
	% OF EMERGENCY RATING				78.40%			31.80%	31.80%	36.30%					
ALT D	ONE PV-N. GILA OUTAGE				OUT		1530	996	996	912		1.02	1.001	1.02	NO PROBLEM
	% OF EMERGENCY RATING						63.00%	41.00%	41.00%	36.20%					
ULT	**POST-ESTRELLA SYSTEM**	**EOR FLOW**	**PV GEN**	**NEW GEN**	**PV-N.G.**	**PV-YUMA**	**PV-DV**	**PV-WWG#1**	**PV-WWG#2**	**PANDA-KYRENE**	**PV-EST**	**PPK 230KV**	**KYR 230KV**	**WWG 230KV**	
	CONTINUOUS RATING				1800	1501	1900	3000	3000	3000	2000				
	EMERGENCY RATING				2400	2026	2430	3200	3200	3000	2521	5% MAX	5% MAX	6% MAX	
2002HS XM1&2	**BASE CASE (IN MW)**	**7064**	**3991**	**6050**	**1467**		**1658**	**1824**	**1824**	**1921**	**1339**	**1.03**	**1.01**	1.03	
	BASE CASE FLOW(AMP)				1620		1833	2017	2017	2131	1524				NO PROBLEM
	% OF CONTINUOUS RATING				89.00%		98.50%	66.10%	66.10%	71.00%	76.20%				WITHIN LIMIT
ALT A	OUTAGE CASE														
	PANDA-KYRENE OUTAGE				1730		1992	2806	2806	OUT	2126	0.99	0.96	1	NO PROBLEM
	% OF EMERGENCY RATING				70.90%		82.00%	84.50%	84.50%		84.30%				
ALT B	ONE PALO VERDE-WWG OUTAGE				1722		1989	OUT	3221	2442	1813	1.02	1	1.02	REACHED
	% OF EMERGENCY RATING				70.50%		81.80%		100.60%	81.40%	71.90%				EMG LIMIT
ALT C	PALO VERDE-DEVERS OUTAGE				2135		OUT	2601	2601	2361	1707	1.02	1	1.02	NO PROBLEM
	% OF EMERGENCY RATING				85.40%			78.90%	78.90%	78.40%	67.70%				
ALT D	PV-N. GILA OUTAGE				OUT		2426	2423	2423	2320	1676	1.02	1	1.02	REACHED
	% OF EMERGENCY RATING						99.80%	75.40%	75.40%	77.30%	66.50%				EMG LIMIT
ALT E	PV-ESTRELLA OUTAGE				1683		1925	2554	2554	2582	OUT	1.01	0.99	1.01	NO PROBLEM
	% OF EMERGENCY RATING				69.10%		79.22%	77.40%	77.40%	86.10%					
ALT F	THREE PV BUS TIES OUTAGE				1966		1665	1434	1434	2805	2138	1.02	1	1.03	NO PROBLEM
	% OF EMERGENCY RATING				79.60%		68.50%	44.20%	44.20%	93.50%	84.80%				

TS-TABLE 9

STABILITY IMPACT ON THE PALO VERDE TRANSFER CAPABILITY WITH PALO VERDE-ESTRELLA AND UPGRADE OF PALO VERDE-KYRENE AND PALO VERDE-N.GILA LINES

		POWER FLOW (MW)										STABILITY RESULTS			
CASE NO.	PRE-PROJECT CASE DESCRIPTION	SCIT FLOW	EOR FLOW	WOR FLOW	COI FLOW	PDCI FLOW	PVNG MARG	PVNG GEN	NEW GEN	PV/HSP TOT	MITIGATION (RAS) TRIPPED NEW GEN	BUS	Vdip	%	COMMENTS
2002HS PRE-	BASE CASE (WATS2002HS01M)	13443	5028	6008	4260	2516	0.07	4283	0	4283					
	N-1 CONTINGENCY														
ST-1	3 PH FLT PV-N. GILA											PV500	0.98	8.0%	Stable and well damped
ST-2	3 PH FLT PV-DEVERS											PV500	0.96	10.0%	Stable and well damped
ST-3	ONE PV GEN OUTAGE											PV500	1.04	2.0%	Stable and well damped
2002HS PRE-	BASE CASE (WATS2002HS01)	13376	4954	5937	4259	2516	0%	3991	0	3991					
	N-2 CONTINGENCY														
ST-4	3 PH FLT TWO PV-WWG											PV500	0.92	14.0%	Stable and well damped
ST-5	TWO PV GEN OUTAGE											MA500	0.88	20.0%	Stable and well damped
ST-6	3 PH FLT @ PERKINS & PK-MD & 2 PV-WWG OUT											PV500	1.025	3.25%	Stable and well damped

		POWER FLOW (MW)										STABILITY RESULTS			
CASE NO.	POST-ULTIMATE CASE DESCRIPTION	SCIT FLOW	EOR FLOW	WOR FLOW	COI FLOW	PDCI FLOW	PVNG MARG	PVBG GEN	NEW GEN	PV/HSP TOT	MITIGATION (RAS) TRIPPED NEW GEN	BUS	Vdip	%	COMMENTS
2002HS POST-	BASE CASE (ULT2002HSXM1&2M)	12422	7138	6204	3570	2516	7%	4283	6050	10333					
	N-1 CONTINGENCY														
ST-1	3 PH FLT PV-N. GILA											PV500	1.03	4.0%	Stable and well damped
ST-2	3 PH FLT PV-DEVERS											PV500	1.03	4.0%	Stable and well damped
ST-3	ONE PV GEN OUTAGE											PV500	1.06	1.0%	Stable and well damped
2002HS POST-	BASE CASE (ULT2002HSXM1&2)	12356	7062	6133	3573	2516	0%	3991	6050	10041					
	N-2 CONTINGENCY														
ST-4A	3 PH FLT TWO PV-WWG										1460 MW (8 New Units)	PV500	0.93	14.0%	Stable and well damped
												MA500	0.82	25.0%	
ST-4B	3 PH FLT TWO PV-WWG										1210 MW (7 New Units)	PV500	0.92	14.0%	Marginally Stable
												MA500	0.82	25.0%	
ST-4C	3 PH FLT TWO PV-WWG										972 MW (6 New Units)	PV500	0.91	15.0%	Unstable
												MA500	collapsed		
ST-5	TWO PV GEN OUTAGE										None	PV500	1.05	2.0%	Stable and well damped
												MA500	0.86	21.00%	
ST-6	3 PH FLT @ PERKINS & PK-MD & 2 PV-WWG OUT										None	PV500	1.00	7.00%	Stable and well damped
												MA500	1.02	5.00%	
ST-7	3PH FLT PV W/ PV-KY & PV-ESTRELL OUT										None	PV500	0.94	13.00%	Stable and well damped
												KYR230	0.82	19.00%	

PT-TABLE 4

POST-TRANSIENT IMPACT ON THE PALO VERDE TRANSFER CAPABILITY WITH PALO VERDE-ESTRELLA AND UPGRADE OF PALO VERDE-KYRENE & PALO VERDE-N.GILA LINES

BENCHMARK PRE-PROJECT SYSTEM	PV GEN TOTAL	KYR MVAR	230KV VOLT	PPK MVAR	230KV VOLT	WWG MVAR	230KV VOLT	LUGO MVAR	230KV VOLT	DEVERS MVAR	230KV VOLT	MIGUI MVAR	230KV VOLT	MALIN MVAR	500 VOLT	COMMENTS
BASE CASE (WATS2002HS01)	3991		1		1.02		1.03		0.99		1		1.004		1.08	
OUTAGE																
PALO VERDE-KYRENE OUT			0.97		1		1.01									Accepable
Q / V		910	0.782	1116	0.828	1678	0.868									
BOTH PALO VERDE-WWG OUT			0.99		1		1									Accepable
Q / V		1275	0.806	1397	0.795	1749	0.775									
TWO PALO VERDE GEN OUT															1.06	Acceptable
Q / V														698	0.985	>400 MVAR Limit
PALO VERDE-DEVERS OUT									0.97		1		0.99			Accepable
Q / V								1743	0.7	1004	0.723	469	0.914			
PALO VERDE-N.GILA OUT									0.97		0.99		1.03			Accepable
Q / V								1758	0.7	1149	0.705	459	0.94			

POST-ULTIMATE SYSTEM	PV GEN TOTAL	KYR MVAR	230KV VOLT	PPK MVAR	230KV VOLT	WWG MVAR	230KV VOLT	LUGO MVAR	230KV VOLT	DEVERS MVAR	230KV VOLT	MIGUI MVAR	230KV VOLT	MALIN MVAR	500 VOLT	COMMENTS
BASE CASE (ULT2002HS0XM1&2)	10041		1.01		1.03		1.03		1		1		0.99		1.07	
OUTAGE																
PALO VERDE-KYRENE OUT			0.95		0.98		0.99									Acceptable
Q / V		813	0.774	976	0.815	1496	0.848									
BOTH PALO VERDE-WWG OUT			0.97		1		1.01									Acceptable
Q / V		1060	0.814	1237	0.83	1640	0.826									
TWO PALO VERDE GEN OUT			1.01		1.02		1.03								1.07	Accepable
Q / V														1520	0.955	>>400 MVAR Limit
BOTH PV-KYR. & PV-ESTRL OUT			0.92		0.94		0.94									Within Limits
Q / V		302	0.808	316	0.831	431	0.858									>103 MVAR Limit
PALO VERDE-DEVERS OUT									0.98		1		0.97			Accepable
Q/V								1774	0.731	1035	0.715	172	0.921			
PALO VERDE-N.GILA OUT									0.98		0.97		1			Accepable
Q/V								2250	0.7	1472	0.7	562	0.899			
BOTH PV-NG & PV-YUMA OUT									0.98		0.96		1			Accepable
Q / V								1808	0.714	1047	0.7	588	0.837			

PF-TABLE 5

POWER FLOW IMPACT ON THE EOR TRANSFER CAPABILITY WITH PV-ESTRELLA AND UPGRADE OF PV-KYRENE & PV-N.GILA LINES

CASE NO.	CASE DESCRIPTION BASE (WATS2002HS02) MAJOR LIMITING ELEMENT	(MW) EOR FLOW	(MW) SCIT FLOW	(AMP) P.V.-DEVR	(AMP) MOE-ELDO	(AMP) LIBTY-MEAD	(AMP) P.V.-N.GILA	(AMP) NAV-CRY. LK	(AMP) PERK-MEAD	(AMP) P.V.-YUMA	(PU) DEVR 230 KV	(PU) MEAD 230KV	(PU) LUGO 230KV	(PU) WWG 230KV	COMMENTS
	CONTINUOUS RATING			1900	1900	887	1400	1630	1430	1501					
	EMERGENCY RATING			2430	2750	1000	1890	2501	1930	2026	5% MAX	5% MAX	5% MAX	5% MAX	
	PRE-PROJECT BENCHMARK														
PRE-2	BASE CASE (WATS2002HS02)	**6576**	**14443**	**1453**	**1195**	**761**	**1403**	**1243**	**1432**		**0.99**	**1.02**	**0.98**	**1.03**	PV-NGThermal Limit 100% Contin. Rating
	% OF CONTINUOUS RATING			76.47%	62.89%	85.79%	100.21%	76.26%	100.14%						
PRE-2A	P.V.-DEVERS OUTAGE			OUT	1517	851	1752	1479	1795		0.98	1.02	0.96	1.03	No Problems
	% OF EMERGENCY RATING				55.16%	85.10%	92.70%	59.14%	93.01%						
PRE-2B	P.V.-N. GILA OUTAGE			1841	1456	836	OUT	1435	1733		0.97	1.02	0.97	1.03	No Problems
	% OF EMERGENCY RATING			75.76%	52.95%	83.60%		57.38%	89.79%						
PRE-2C	NAVAJO-CRYSTAL OUTAGE			1576	1960	814	1472	OUT	1664		0.99	1.01	0.98	1.03	No Problems
	% OF EMERGENCY RATING			64.86%	71.27%	81.40%	77.88%		86.22%						
PRE-2D	CRYSTAL-MCCULLGH OUTAGE			1467	1282	765	1411	1108	1457		0.99	1.02	0.98	1.03	No Problems
	% OF EMERGENCY RATING			60.37%	46.62%	76.50%	74.66%	44.30%	75.49%						
				1569											
PRE-2E	MOENKOPI-ELDORADO OUTAGE			64.57	OUT	809	1467	1868	1663		0.99	1.01	0.98	1.03	No Problems
	% OF EMERGENCY RATING					80.90%	77.62%	74.69%	86.17%						
PRE-2F	PERKINS-MEAD OUTAGE			1713	1630	897	1548	1574	OUT		0.98	1.02	0.98	1.04	No Problems
	% OF EMERGENCY RATING			70.49%	59.27%	89.70%	81.90%	62.93%							

CASE NO.	POST-ESTRELLA SYSTEM	(MW) EOR FLOW	(MW) SCIT FLOW	(AMP) P.V.-DEVR	(AMP) MOE-ELDO	(AMP) LIBTY-MEAD	(AMP) P.V.-N.GILA	(AMP) NAV-CRY. LK	(AMP) PERK-MEAD	(AMP) P.V.-YUMA	(PU) DEVR 230 KV	(PU) MEAD 230KV	(PU) LUGO 230KV	(PU) WWG 230KV	COMMENTS
	CONTINUOUS RATING			1900	1900	887	**1800**	1630	1430	1501					
	EMERGENCY RATING			2430	2750	1000	**2400**	2501	1930	2026	5% MAX	5% MAX	5% MAX	5% MAX	
POST-2	**BASE CASE (2002HS02-XM1&2)**	**6973**	**14844**	**1836**	**1054**	**760**	**1649**	**1200**	**1423**		**1**	**1.03**	**1**	1.03	No Problems
	% OF CONTINUOUS RATING	(+397)	(+401)	96.60%	55.20%	85.60%	90.40%	73.60%	99.51%						
POST-2A	P.V.-DEVERS OUTAGE			OUT	1464	877	2164	1499	1877		1	1.01	0.98	1.02	No Problems
	% OF EMERGENCY RATING				52.40%	87.70%	86.40%	59.90%	97.30%						
POST-2B	P.V.-N. GILA OUTAGE			2441	1369	855	OUT	1427	1785		0.95	1.02	0.97	1.02	Reched EMG Limit
	% OF EMERGENCY RATING			100.50%	49.00%	85.50%		57.10%	92.49%						
POST-2C	NAVAJO-CRYSTAL OUTAGE			1959	1780	810	1727	OUT	1647		1	1.03	1	1.03	No Problems
	% OF EMERGENCY RATING			80.60%	64.80%	81.00%	70.70%		85.30%						
POST-2D	CRYSTAL-MCCULLGH OUTAGE			1848	1125	763	1656	1085	1444		1	1.03	1	1.03	No Problems
	% OF EMERGENCY RATING			76.00%	40.80%	76.30%	68.10%	43.38%	74.82%						
POST-2E	MOENKOPI-ELDORADO OUTAGE			1946	OUT	802	1719	1750	1640		1	1.03	1	1.03	No Problems
	% OF EMERGENCY RATING			80.10%		80.20%	70.40%	69.97%	84.97%						
POST-2F	PERKINS-MEAD OUTAGE			2107	1492	893	1822	1530	OUT		0.99	1.03	1	1.03	No Problems
	% OF EMERGENCY RATING			86.70%	53.90%	89.30%	74.20%	61.18%							

TS-TABLE 10

STABILITY IMPACT ON THE EOR/SCIT TRANSFER CAPABILITY WITH PALO VERDE-ESTRELLA AND UPGRADE OF THE PALO VERDE-KYRENE & PALO VERDE-N.GILA LINES

		POWER FLOW (MW)										STABILITY RESULTS			
CASE NO.	PRE-PROJECT CASE DESCRIPTION	SCIT FLOW	EOR FLOW	WOR FLOW	M/V FLOW	COI FLOW	PDCI FLOW	PVNG MARG	PVNG GEN	NEW GEN	PV/HSP TOT	BUS	Vdip	%	COMMENTS
2002HS	BASE CASE	14443	6576	6267	2963	4350	2735	0%	3991	0	3991				
PRE-	(WATS2002HS02) N-1 CONTINGENCY														
ST-1	3 PH FLT PV-N. GILA											DEVERS230	0.91	9.0%	Stable and well damped
ST-2	3 PH FLT PV-DEVERS											DEVERS230	0.96	3.0%	Stable and well damped
ST-3	3 PH FLT MKP-ELDO											DEVERS230	0.97	2.0%	Stable and well damped
ST-4	3 PH FLT NAV-CRYSTAL											DEVERS230	0.96	3.0%	Stable and well damped
ST-5	3 PH FLT PERK-MEAD											DEVERS230	0.98	2.0%	Stable and well damped

		POWER FLOW (MW)										STABILITY RESULTS			
CASE NO.	POST-ULTIMATE CASE DESCRIPTION	SCIT FLOW	EOR FLOW	WOR FLOW	M/V FLOW	COI FLOW	PDCI FLOW	PVNG MARG	PVNG GEN	NEW GEN	PV/HSP TOT	BUS	Vdip	%	COMMENTS
2002HS	BASE CASE	14844	6973	6647	2964	4346	2735	0%	3991	6050	10041				
POST-	(ULT2002HS02XM1&2) N-1 CONTINGENCY	(+401)	(+397)												
ST-1	3 PH FLT PV-N. GILA											DEVERS230	0.88	12.0%	Stable and well damped
ST-2	3 PH FLT PV-DEVERS											DEVERS230	0.97	3.0%	Stable and well damped
ST-3	3 PH FLT MKP-ELDO											DEVERS230	0.98	2.0%	Stable and well damped
ST-4	3 PH FLT NAV-CRYSTAL											DEVERS230	0.98	2.0%	Stable and well damped
ST-5	3 PH FLT PERK-MEAD											DEVERS230	0.99	1.0%	Stable and well damped

PT-TABLE 5

POST-TRANSIENT IMPACT ON THE EOR/SCIT TRANSFER CAPABILITY WITH PV-ESTRELLA & UPGRADE OF PV-KYRENE & PV-N.GILA LINES

BENCHMARK PRE-PROJECT SYSTEM	EOR FLOW	SCIT TOTAL	MIRAL MVAR	500KV VOLT	VCTRV MVAR	500KV VOLT	DEVERS MVAR	230KV VOLT	LUGO MVAR	230KV VOLT	MIGUEL MVAR	230KV VOLT	SOTHBAY MVAR	69.0KV VOLT	MALIN MVAR	500 VOLT	COMMENTS
BASE CASE (WATS2002HS02))	6576	14443		1.04		1.05		0.99		0.98		1.002		1.001		1.08	
OUTAGE																	
PALO VERDE-DEVERS OUT				1.02		1.03		0.99		0.96		0.98		1.01			Accepable
Q / V			1433	0.864	1988	0.875	864	0.733	1517	0.741	341	0.915	298	0.857			
PALO VERDE-N.GILA OUT				1.02		1.03		0.96		0.96		1.02		1.02			Accepable
Q / V			1406	0.868	1925	0.885	910	0.717	1504	0.746	580	0.929	319	0.867			
IMPERIAL VA-MIGUEL OUT				1.01		1.03		0.96		0.96		0.98		1.01			Limiting Case
Q / V			1016	0.915	1534	0.92	753	0.782	1248	0.8	270	0.839	158	0.897			150 MVAR Limit
TWO PALO VERDE GEN OUT				1.03		1.05		1.0001		0.97		1.01		1.02		1.05	Accepable
Q / V			2030	0.838	2711	0.854	1248	0.707	1773	0.707	698	0.909	348	0.859	380	1.01	250 MVAR Limit
TWO SAN ONOFRE GEN OUT *				1.02		1.03		0.98		0.96		1		1.03		1.03	Accepable
Q / V			1028	0.894	1600	0.915	815	0.778	1262	0.786	442	0.916	357	0.869	357	0.869	
IPPDC OUT				1.03		1.03		0.98		0.96		1		1.02		1.08	Acceptable
Q / V			2080	0.824	2869	0.84	1173	0.7	1760	0.7	543	0.913	321	0.863	1216	0.98	

POST-ULTIMATE SYSTEM	EOR FLOW	SCIT TOTAL	MIRAL MVAR	500KV VOLT	VCTRV MVAR	500KV VOLT	DEVERS MVAR	230KV VOLT	LUGO MVAR	230KV VOLT	MIGUEL MVAR	230KV VOLT	SOTHBAY MVAR	69.0KV VOLT	MALIN MVAR	500 VOLT	COMMENTS
BASE CASE (2002HS02-XM1&2)	6973	14844		1.07		1.07		1		1		1		1.02		1.08	
OUTAGE																	
PALO VERDE-DEVERS OUT				1.06		1.07		0.97		0.99		0.99		1.01			Acceptable
Q / V			2887	0.803	3000	0.803	2070	0.7	2070	0.7	440	0.913	311	0.859			
PALO VERDE-N.GILA OUT				1.04		1.04		0.96		0.97		1		1.02			Acceptable
Q / V			1802	0.87	2360	0.86	953	0.7	1668	0.715	381	0.869	236	0.883			
IMPERIAL VA-MIGUEL OUT				1.07		1.08		1		1.01		1		1.02			Acceptable
Q / V			3000	0.777	3000	0.83	2118	0.708	2159	0.7	519	0.911	318	0.863			>150 MVAR Limit
TWO PALO VERDE GEN OUT				1.07		1.08		1		0.97		1.01		1.02		1.06	Accepable
Q / V			3000	0.79	3000	0.83	1442	0.7	2118	0.708	701	0.904	347	0.859	847	0.99	>400 MVAR Limit
TWO SAN ONOFRE GEN OUT *				1.05		1.06		0.99		0.98		0.99		1.03		1.08	Acceptable
Q / V			1748	0.894	2618	0.885	1093	0.717	1759	0.716	406	0.912	356	0.869	1641	0.97	
IPPDC OUT				1.06		1.05		0.99		0.98		0.99		1.02		1.08	Acceptable
Q / V			2948	0.799	3000	0.802	1287	0.7	1985	0.7	457	0.91	313	0.859	1403	0.975	

*RAS:Load Shedding.

TS-TABLE 10A

STABILITY IMPACT WITHOUT PANDA ON THE PALO VERDE TRANSFER CAPABILITY
(WITH PALO VERDE-ESTRELLA BUT WITHOUT THE UPGRADE OF PALO VERDE-N.GILA & PALO VERDE-KYRENE LINES)

CASE NO.	PRE-PROJECT CASE DESCRIPTION	POWER FLOW (MW) SCIT FLOW	EOR FLOW	WOR FLOW	COI FLOW	PDCI FLOW	PVNG MARG	PVNG GEN	NEW GEN	PV/HSP TOT	MITIGATION (RAS) TRIPPED NEW GEN (TO PV SYSTEM)	STABILITY RESULTS BUS	Vdip	%	COMMENTS
2002HS POST-	**BASE CASE (ULT2002HSXM1&2D) N-2 CONTINGENCY**	**12201**	**6026**	**5350**	**4223**	**2516**	**0%**	**3991**	**4850**	**8841**					
ST-4	3 PH FLT TWO PV-WWG (W/O Panda Tie To PV)											PV500 MA500	0.85 Collapsed	21.0%	Unstable
ST-4S3	3 PH FLT TWO PV-WWG										Added 375 MVAR SVC	PV500 MA500	0.88 0.78	18.0% 30.0%	Marginally stable Met voltage dip criteria
ST-4T2	3 PH FLT TWO PV-WWG										Tripped 190 MW New Gen	PV500 MA500	0.88 0.78	18.0% 30.0%	Marginally stable Met voltage dip criteria
2002HS POST-	**BASE CASE (ULT2002HSXM1&2P) N-2 CONTINGENCY**	**12203**	**6017**	**5341**	**4230**	**2516**	**0%**	**3991**	**4725**	**8716**					
ST-4	3 PH FLT TWO PV-WWG										Reduced new generation output by 125 MW	PV500 MA500	0.89 0.80	17.0% 28.0%	Marginally stable Met voltage dip criteria

CASE NO.	POST-ULTIMATE CASE DESCRIPTION	SCIT FLOW	EOR FLOW	WOR FLOW	COI FLOW	PDCI FLOW	PV GEN MARG	PV NET GEN	PV NET GEN	PV NET GEN		BUS	Vdip	%	COMMENTS
2000HS POST-	**BASE CASE (2000HS-PV10) N-2 CONTINGENCY**	**12677**	**5804**	**6062**	**4499**	**2642**	**0%**	**3991**	**4850**	**8841**					
ST-4	3 PH FLT TWO PV-WWG										No Requirements	PV500 MA500	0.88 0.87	18.0% 21.0%	Stable and damped

TS-TABLE 10B

STABILITY IMPACT WITHOUT PANDA ON THE PALO VERDE TRANSFER CAPABILITY (WITH THE PALO VERDE-ESTRELLA AND THE UPGRADE OF THE PALO VERDE-N.GILA & PALO VERDE-KYRENE LINES)

CASE NO.	PRE-PROJECT CASE DESCRIPTION	POWER FLOW (MW) SCIT FLOW	EOR FLOW	WOR FLOW	COI FLOW	PDCI FLOW	PV GEN MARG	PVNG GEN	NEW GEN	PV/HSP TOT	MITIGATION (RAS) TRIPPED NEW GEN (TO PV SYSTEM)	STABILITY RESULTS BUS	Vdip	%	COMMENTS
2002HS POST-	**BASE CASE (ULT2002HSXM1&2P) N-2 CONTINGENCY**	**12356**	**7053**	**6130**	**3577**	**2516**	**0%**	**3991**	**6050**	**10041**					
ST-4S2	3 PH FLT TWO PV-WWG (*W/O Panda Tie To PV*)										Tripped 1427 MW(7 units) Added 1000 MVAR SVC@ PV 500 KV BUS	PV500 MA500	0.90 0.79	16.0% 29.0%	Marginally stable Met voltage dip criteria
ST-4T2	3 PH FLT TWO PV-WWG										Tripped 1677 MW(8 units) Added 600 MVAR SVC @ PV 500 KV Bus	PV500 MA500	0.89 0.78	17.0% 30.0%	Marginally stable Met voltage dip criteria
ST-4T4	3 PH FLT TWO PV-WWG										Tripped 1927 MW(9 units) Added 300 MVAR SVC @ PV 500 KV Bus	PV500 MA500	0.88 0.78	18.0% 30.0%	Marginally stable Met voltage dip criteria
ST-4T5	3 PH FLT TWO PV-WWG										Tripped 2202 MW(10 units) No SVC @PV 500 KV Bus	PV500 MA500	0.88 0.75	18.0% 33.0%	Marginally stable Slightly exceeded voltage dip criteria

CASE NO.	POST-ULTIMATE CASE DESCRIPTION	SCIT FLOW	EOR FLOW	WOR FLOW	COI FLOW	PDCI FLOW	PV GEN MARG	PVNG GEN	NEW GEN	PV NET GEN		BUS	Vdip	%	COMMENTS
2000HS POST-	**BASE CASE (2000HS-PV20) N-2 CONTINGENCY**	**12665**	**6227**	**6478**	**4080**	**2642**	**0%**	**3991**	**6050**	**10041**					
ST-4T2	3 PH FLT TWO PV-WWG										Tripped 1414 MW(7 units) Added 400 MVAR SVC @ PV 500 KV Bus	PV500 MA500	0.84 0.78	22.0% 30.0%	Stable and damped *Met voltage dip criteria*
ST-4T3	3 PH FLT TWO PV-WWG										Tripped 1034 MW(5 units) Added 1000 MVAR SVC @ PV 500 KV Bus	PV500 MA500	0.85 0.79	21.0% 29.0%	Stable and damped Met voltage dip criteria
ST-4T4	3 PH FLT TWO PV-WWG										Tripped 1618 MW(7 units) No SVC @PV 500 KV Bus	PV500 MA500	0.82 0.76	18.0% 32.0%	Stable and damped Slightly exceeded voltage dip criteria

TS-TABLE 11

STABILITY IMPACT ON THE PALO VERDE TRANSFER CAPABILITY
SENSITIVITY OF INCREASEING EOR/SCIT SCHEDULE BY ADDITIONAL 700 MW

		POWER FLOW (MW)											STABILITY RESULTS			
CASE NO.	POST-ULTIMATE CASE DESCRIPTION	EOR FLOW	EOR ADDED	SCIT FLOW	SCIT ADDED	WOR FLOW	COI FLOW	PDCI FLOW	PVNG MARG	PVNG GEN	NEW GEN	PV/HSP TOT	BUS	Vdip	%	COMMENTS
WITH 37 NEW 2000HS POST-	NO NEW PV LINES GENERATORS BASE CASE (200HS-PV07A) N-2 CONTINGENCY	5290		12662		5435	4318	2642	0%	3991	3455	7446				
ST-4	3 PH FLT @ PV500KV L/O TWO PV-WWG CKTS												PV500 MA500	0.92 0.88	14.0% 20.0%	Stable and damped
2000HS POST-	SENSITIVITY CASE (200HS-PV07S)	5819	529	13330	668	6046	4379	2642	0%	3991	3455	7446				
ST-4	3 PH FLT @ PV500KV L/O TWO PV-WWG CKTS												PV500 MA500	0.91 0.88	15.0% 20.0%	Stable and damped
19 NEW 2000HS POST-	GENERATORS BASE CASE (200HS-PV05) N-2 CONTINGENCY	5259		12823		5417	4483	2642	0%	3991	2700	6691				
ST-4	3 PH FLT @ PV500KV L/O TWO PV-WWG CKTS												PV500 MA500	0.84 0.86	22.0% 22.0%	Stable and damped
2000HS POST-	SENSITIVITY CASE (200HS-PV05S)	5786	527	13517	694	6047	4563	2642	0%	3991	2700	6691				
ST-4	3 PH FLT @ PV500KV L/O TWO PV-WWG CKTS												PV500 MA500	0.84 0.84	22.0% 24.0%	Stable and damped
11 NEW 2000HS POST-	GENERATORS BASE CASE (200HS-PV02) N-2 CONTINGENCY	4962		13035		5620	4505	2642	0%	3991	2000	5991				
ST-4	3 PH FLT @ PV500KV L/O TWO PV-WWG CKTS												PV500 MA500	0.76 0.90	30.0% 18.0%	Stable and damped
2000HS POST-	SENSITIVITY CASE (200HS-PV02S)	5494	532	13724	689	6248	4569	2642	0%	3991	2000	5991				
ST-4	3 PH FLT @ PV500KV L/O TWO PV-WWG CKTS												PV500 MA500	0.76 0.89	30.0% 19.0%	Stable and damped

TS-TABLE 12

STABILITY IMPACT ON THE PALO VERDE TRANSFER CAPABILITY
SENSITIVITY OF ADDING A 7 % GENERATION MARGIN TO PVNG UNITS (A TOTAL OF 292 MW)
N-2 CONTINGENCY: 3 PHASE FAULT ON PV 500KV AND LOSS OF BOTH PV-WWG CIRCUITS

		POWER FLOW (MW)										STABILITY RESULTS			
CASE NO.	POST-ULTIMATE CASE DESCRIPTION	EOR FLOW	SCIT FLOW	WOR FLOW	COI FLOW	PDCI FLOW	PVNG MARG	PVNG GEN	NEW GEN	PV/HSP TOT	MITIGATION ADD RAS @ PV	BUS	Vdip	%	COMMENTS
WITH	NO NEW PV LINES														
37 NEW	GENERATORS														
	200HS-PV07A	5290	12662	5435	4318	2642	0%	3991	3455	7446	NONE				
TS-4	N-2 CONTINGENCY											PV500	0.92	14.0%	Stable and damped
												MA500	0.88	20.0%	
	200HS-PV07M0	5313	12735	5498	4328	2642	7%	4283	3455	7738	NONE				
TS-4	N-2 WITH NO RAS														Unstasble
TS-4T2	N-2 WITH RAS										TRIP 117 MW	PV500	0.88	18.0%	Stable and damped
	TRIP NEW GEN @PV											MA500	0.76	30.0%	
TS-4S3	N-2 WITH RAS										300 MVAR SVC	PV500	0.90	16.0%	Stable and damped
	ADD 300MVAR SVC											MA500	0.82	26.0%	
TS-4	200HS-PV07M4	5279	12757	5464	4379	2642	7%	4283	3363	7646	REDUCED NEW	PV500	0.90	16.0%	Stable and damped
	N-2 REDUCED GEN										GEN BY 92 MW	MA500	0.85	23.0%	
19 NEW	GENERATORS														
TS-4	200HS-PV05	5259	12823	5417	4483	2642	0%	3991	2700	6691	NONE				
	N-2 CONTINGENCY											PV500	0.84	22.0%	Stable and damped
												MA500	0.86	22.0%	
	200HS-PV05M0	5293	12900	5500	4477	2642	7%	4283	2700	6983	NONE				
TS-4	N-2 WITH NO RAS														Unstasble
TS-4T6	N-2 WITH RAS										TRIP 600 MW	PV500	0.76	30.0%	Stable and damped
	TRIP NEW GEN @PV											MA500	0.81	27.0%	
TS-4S5	N-2 WITH RAS										500 MVAR SVC	PV500	0.84	22.0%	Stable and damped
	ADD 300MVAR SVC											MA500	0.82	26.0%	
TS-4	200HS-PV05M2	5283	12900	5498	4479	2642	7%	4283	2500	6783	REDUCED NEW	PV500	0.86	20.0%	Stable and damped
	N-2 REDUCED GEN										GEN BY 200 MW	MA500	0.89	19.0%	
11 NEW	GENERATORS														
TS-04	2000HS-PV02	4962	13035	5620	4505	2642	0%	3991	2000	5991					
	N-2 CONTINGENCY											PV500	0.76	30.0%	Stable and damped
												MA500	0.90	18.0%	
	200HS-PV02M0	4991	13112	5703	4498	2642	7%	4283	2000	6283	NONE				
TS-4	N-2 WITH NO RAS														Unstasble
TS-4T3	N-2 WITH RAS										TRIP 354 MW	PV500	0.75	31.0%	Stable and damped
	TRIP NEW GEN @PV											MA500	0.89	19.0%	
TS-4S5	N-2 WITH RAS										500 MVAR SVC	PV500	0.79	27.0%	Stable and damped
	ADD 300MVAR SVC											MA500	0.90	18.0%	
TS-4	200HS-PV02M2	4974	13109	5693	4505	2642	7%	4283	1800	6083	REDUCED NEW	PV500	0.80	26.0%	Stable and damped
	N-2 REDUCED GEN										GEN BY 200 MW	MA500	0.91	17.0%	

TS-TABLE 13

STABILITY IMPACT ON THE PALO VERDE TRANSFER CAPABILITY DUE TO THE DOUBLE OUTAGE OF THE HARQUHALA AND DUKE ENERGY PROJECT INTERTIES

		POWER FLOW (MW)											STABILITY RESULTS			
CASE NO.	POST-ULTIMATE CASE DESCRIPTION	SCIT FLOW	EOR FLOW	WOR FLOW	COI FLOW	PDCI FLOW	HGC GEN	DEM GEN	PVNG MARG	PVNG GEN	NEW GEN	PV /HSP TOT	BUS	Vdip	%	COMMENTS
WITH	3 NEW 500KV LINES															
2002HS	BASE CASE	13892	7306	6449	4273	2516	1100	1200	0%	3991	6750	10741				
POST-	(2002HS-01C2A2M)															
	N-2 CONTINGENCY															
ST-9	3 PH FLT @ PV500KV												PV500	0.95	11.0%	Stable and damped
	LOSS HGC & DEM TIES												MA500	0.83	25.0%	
WITH	PV-ESTRELLA LINE															
2002HS	BASE CASE	12356	7053	6130	3577	2516	1100	1200	0%	3991	6050	10041				
POST-	(2002HS-01C2XM1&2P)															
	N-2 CONTINGENCY															
ST-9	3 PH FLT @ PV500KV												PV500	0.95	11.0%	Stable and damped
	LOSS HGC & DEM TIES												MA500	0.84	24.0%	
WITH	NO NEW PV LINES															
37 NEW	GENERATORS															
2000HS	BASE CASE	12736	5305	5506	4320	2642	1100	1200	7%	4283	3455	7738				
POST-	(200HS-PV07M0A)															
	N-2 CONTINGENCY															
ST-9	3 PH FLT @ PV500KV												PV500	0.96	10.0%	Stable and damped
	LOSS HGC & DEM TIES												MA500	0.89	19.0%	
19 NEW	GENERATORS															
2000HS	BASE CASE	12898	5294	5499	4475	2642	1100	1200	7%	4283	2700	6983				
POST-	(200HS-PV05M0A)															
	N-2 CONTINGENCY															
ST-9	3 PH FLT @ PV500KV												PV500	0.95	11.0%	Stable and damped
	LOSS HGC & DEM TIES												MA500	0.86	22.0%	
14 NEW	GENERATORS															
2000HS	BASE CASE	13115	5014	5715	4487	2642	1100	1200	7%	4283	2300	6583				
POST-	(200HS-PV02M0A)															
	N-2 CONTINGENCY															
ST-9	3 PH FLT @ PV500KV												PV500	0.94	12.0%	Stable and damped
	LOSS HGC & DEM TIES												MA500	0.86	22.0%	

EXHIBIT 1
Palo Verde Transmission Capability
One New Major Line Initially Out Of Service

CASE I.D. ULT2002HS	New Generation Added Number of New Units	System Conditions Power Transfers To Areas	Power Flow Study Results N-0 Or N-1 Constraint	Stability Study Results N-2 Two PV-WWG Contingency	Case Comments
	(0) All 3 New Major Lines	**In-Service**			
1C2	6750 MW 49 Units (4820 MVAR Capability)	3150 MW (AZ), 1150 MW (CA) , 1000 MW (Mexico), 600 MW (Utah) , & 850MW (New Mexico & Colorado)	PV-NG @ 98.3% of emerg. rating PV-KY @ 99.4% of contin. rating	Marginally stable and damped Malin 500KV dip @0.83pu (25% dip)	Reached stability limit Within thermal limit
	(a) Palo Verde-Mexico Tie	**Initially Out Of Service**			
XM1	5750 MW 49 Units	3150 MW (AZ), 1150 MW (CA) , 600 MW (Utah) & 850 MW (New Mexico & Colorado)	PV-NG @ 98.3% of emerg. rating PV-KY @ 99.4% of contin. rating	Stable and welldamped Malin 500KV dip @0.92pu (16% dip)	Within thermal and stability limits
XM1A Decrement	5850 MW 49 Units (900 MW)	3150 MW (AZ), 1250 MW (CA), 600 MW (Utah) & 850 MW (New Mexico & Colorado)	PV-NG @ 99.9% of emerg. rating PV-KY @ 99.9% of contin. rating	Stable and well damped Malin 500KV dip @0.90pu (18% dip)	Reached thermal limit
XM1B	45 Units (4475 MVAR Capability)	Same as the above	Same as the above	Marginally stable (Malin V dip@32%)	Reached stability limit
	(b) Palo Verde-Yuma W.	**Initially Out Of Service**			
XM2	5650 MW 49 Units	3200 MW (AZ), 1000 MW (Mexico) , 600 MW (Utah) & 850 MW (New Mexico & Colorado)	PV-NG @ 100.8% of contin. rating PV-KY @ 95.2% of contin. rating	Stable and well damped Malin 500KV dip @0.98pu (10% dip)	Within stability limit
XM2A Decrement	5850 MW 49 Units (900 MW)	3550 MW (AZ), 1000 MW (Mexico), 600 MW (Utah) & 700 MW (New Mexico & Colorado)	PV-NG @ 100.4% of contin. rating PV-KY @ 100.4% of contin. rating	Stable and well damped Malin 500KV dip @0.95pu (13% dip)	Reached thermal limit
XM2B	42 Units (4280 MVAR Capability)	Same as the above	Same as the above	Marginally stable (Malin V dip@23%)	Reached stability limit
	(c) Palo Verde-Estrella Tie	**Initiaaly Out Of Service**			
XM3	5550 MW 49 Units (4820 MVAR Capability)	1950 MW (AZ), 1150 MW (CA) , 1000 MW (Mexico), 600 MW (Utah) 850 MW (New Mexico & Colorado)	PV-NG @ 97.4% of emerg. rating PV-KY @ 99.9% of contin. rating	Unstable Voltage collapsed in the Northwest	Exceeded stability limit
XM3A Decrement	5250 MW 49 Units (1500 MW)	1950 MW (AZ), 1150 MW (CA) , 1000 MW(Mexico), 600 MW (Utah) 550 MW (New Mexico & Colorado)	PV-NG @ 95.1% of emerg. rating PV-KY @ 97.4% of contin. rating	Stable and well damped Malin 500KV dip @0.87pu (21% dip)	Reached stability limit Within thermal limit
XM3B	5350 MW 49 Units	1950 MW (AZ), 1150 MW (CA) , 1000 MW (Mexico), 600 MW (Utah) 650 MW (New Mexico & Colorado)	PV-NG @ 95.9% of emerg. rating PV-KY @ 97.9% of contin. rating	Unstable Voltage collapsed in the Northwest	Exceeded stability limit

EXHIBIT 2
Palo Verde Transmission Capability
Two New Major Lines Initially Out Of Service

CASE I.D. ULT2002HS	New Generation Added Number of New Units	System Conditions Power Transfers To Areas	Power Flow Study Results N-0 Or N-1 Constraint	Stability Study Results N-2 Two PV-WWG Contingency	Case Comments
	(0) All 3 New Major Lines	**In-Service**			
1C2	6750 MW 49 Units (4820 MVAR Capability)	3150 MW (AZ), 1150 MW (CA) 1000 MW (Mexico), 600 MW (Utah) & 850MW (New Mexico & Colorado)	PV-NG @ 98.3% of emerg. rating PV-KY @ 99.4% of contin. rating	Marginally stable and damped Malin 500KV dip @0.83pu (25% dip)	Reached stability limit Within thermal limit
	(a) Palo Verde-Mexico Tie	**and Palo Verde-Yuma West Line**	**Initially Out Of Service**		
XM1 &2	4650 MW 49 Units	3150 MW (AZ), 600 MW (Utah) & 900 MW (New Mexico & Colorado)	PV-NG @ 100.8% of contin. rating PV-KY @ 95.3% of contin. rating	Stable and well damped Malin 500KV dip @1.01pu (7% dip)	Within stability limit PV-NG @ thermal limit
XM1 &2A Decrement	4850 MW 49 Units (1900 MW)	3500 MW (AZ), 600 MW (Utah) & 750 MW (New Mexico & Colorado) Mexico & Colorado)	PV-NG @ 100.5% of contin. rating PV-KY @ 100.8% of contin. rating	Stable and well damped Malin 500KV dip @0.99pu (9% dip)	Within stability limit Thermal limits
XM1&2B	34 UNITS (3711 MVAR Capability)	Same as the above	Same as the above	Marginally stable (Malin V dip@26%)	Reached stability limit
XM1&2M Upgrade & Mitigation	6050MW 49 Units	1500 MW (CA),3500 MW(AZ),, 350 MW(CO) & 700 MW (NM)	PV-DV @ 99.8% of emerg.rating PV-WWG @ 100.6% of emerg.rating	Marginally stable (Malin V dip@25%) RAS: Tripped 1210 MW of new Gen.	Reached both thermal and stability limits
	(b) Palo Verde-Mexico Tie	**and Palo Verde-Estrella 500 KV**	**Initially Out Of Service**		
XM1&3	4550 MW 49 Units (4820 MVAR Capability)	1950 MW (AZ), 1150 MW (CA) 600 MW (Utah) & 850 MW (New Mexico & Colorado)	PV-NG @ 97.4% of emerg. rating PV-KY @ 100.2% of contin. rating	Unstable Voltage collapsed in the Northwest	Exceeded stability limit limits
XM1&3A Decrement	4450 MW 49 Units (2300 MW)	1950 MW (AZ), 1150 MW (CA) 600 MW (Utah) & 750 MW (New Mexico & Colorado)	PV-NG @ 96.6% of emerg. rating PV-KY @ 99.2% of contin. rating	Stable and well damped Malin 500KV dip @0.88pu 20% dip)	Reached thermal limit Within stability limit
XM1&3B	44 UNITS (4566 MVAR Capability)	Same as the above	Same as the above	Marginally stable (Malin V dip@25%)	Reached stability limit
	(c) Palo Verde-Yuma West	**and Palo Verde-Estrella 500 KV**	**Initially Out Of Service**		
XM2&3	4445 MW 49 Units (4820 MVAR Capability)	1995 MW (AZ), 1000 MW (Mexico) 600 MW (Utah) & 850 MW (New Mexico & Colorado)	PV-NG @ 100.1% of contin. rating PV-KY @ 97.8% of contin. rating	Stable and well damped Malin 500KV dip @0.95pu (13% dip)	Within stability limit PV-NG @ thermal limit
XM2&3A Decrement	4645 MW 49 Units (2105 MW)	2195 MW (AZ), 1000 MW (Mexico) 600 MW (Utah) & 850 MW (New Mexico & Colorado)	PV-NG @ 100.6% of contin. rating PV-KY @ 100.8% of contin. rating	Stable and well damped Malin 500KV dip @0.87pu (21% dip)	Reached thermal limits Within stability limit
XM2&3B	47 UNITS (4716 MVAR Capability)	Same as the above	Same as the above	Marginally stable (Malin V dip@25%)	Reached stability limit

EXHIBIT 3
Palo Verde Transmission Capability
All New Three Major Lines Out Of Service

CASE I.D. ULT2002HS	New Generation Added Number of New Units	System Conditions Power Transfers To Areas	Power Flow Study Results N-0 Or N-1 Constraint	Stability Study Results N-2 Two PV-WWG Contingency	Case Comments
	Added 49 New Gen Units	**With 3 New Lines In Service**			
1C2	6750 MW (4820 MVAR Capability)	3150 MW (AZ), 1150 MW (CA), 1000 MW(Mexico),600 MW (Utah) 850 MW (New Mexico & Colorado)	PV-NG @ 98.3% of emerg. rating PV-KY @ 99.4% of contin. rating	Marginally stable and damped Malin 500KV dip @0.83pu (25% dip)	Reached stability limit Within thermal limit
	Added 37 New Gen Units	**With 3 New Lines Out Of Service**			
XM1,2&3A1 Decrement	3455 MW (3295 MW) (3937 MVAR Capability)	2005 MW (AZ), 600 MW(Utah) and 850 MW (New Mexico & Colorado)	PV-NG @ 100.2% of contin. rating PV-KY @ 98.2% of contin. rating	Marginally stable and damped Malin 500KV dip @0.84pu(24% dip)	Reached both thermal and stability limits
XM1,2&3A2	3555 MW	2105 MW (AZ,), 600 MW (Utah) 850 MW (New Mexico & Colorado)	PV-NG @ 100.4% of contin. rating PV-KY @ 99.7% of contin. rating	Unstable Voltage collapsed in the Northwest	Exceeded Stability Limit
XM1,2&3A3 Decrement	3455 MW (3295 MW)	1000 MW (CA) & 2455 MW (AZ)	PV-NG @ 100.4% of contin. rating PV-KY @ 100.8% of contin. rating	Marginally stable and damped Malin 500KV dip @0.80pu(28% dip)	Reached both thermal and stability limits
XM1,2&3A4	3555 MW	1000 MW (CA) & 2555 MW (AZ)	PV-NG @ 100.7% of contin. rating PV-KY @ 102.4% of contin. rating	Unstable Voltage collapsed in the Northwest	Exceeded both thermal and stability limits
	Added 19 New Gen Units	With 3 New Lines Out Of Service			
XM1,2&3B1 Decrement	2600 MW (4150 MW) (2259 MVAR Capability)	1000 MW (CA) & 1600 MW (AZ)	PV-NG @ 98.7% of contin. rating PV-KY @ 80.5% of contin. rating	Marginally stable and damped Malin 500KV dip @0.78pu (30% dip)	Reached stability limit Within thermal limit
XM1,2&3B2	2700 MW	1000 MW (CA) & 1700 MW (AZ)	PV-NG @ 99.0% of contin. rating PV-KY @ 82.0% of contin. rating	Unstable Voltage collapsed in the Northwest	Exceeded stability limit
	Added 11 New Gen Units	**With 3 New Lines Out Of Service**			
XM1,2&3C1 Decrement	1800 MW (4950 MW) (1300 MVAR Capability)	1800 MW (AZ)	PV-NG @ 85.4% of contin. rating PV-KY @ 73.3% of contin. rating	Marginally stable and damped Malin 500KV dip @0.89pu (18% dip)	Reached stability limit Within thermal limit
XM1,2&3C2	1900 MW	1900 MW (AZ)	PV-NG @ 85.7% of contin. rating PV-KY @ 75.0% of contin. rating	Marginally unstable Malin 500KV dip @0.72pu (35% dip)	Exceeded stability limit
XM1,2&3C3	2000 MW	2000 MW (AZ)	PV-NG @ 85.9% of contin. rating PV-KY @ 77.3% of contin. rating	Unstable Voltage collapsed in the Northwest	Exceeded stability limit
XM1,2&3C4	2000 MW	1000 MW (CA) & 1000 MW (AZ)	PV-NG @ 97.3% of contin. rating PV-KY @ 64.4% of contin. rating	Unstable Voltage collapsed in the Northwest	Exceeded stability limit
XM1,2&3C5	1900 MW	1000 MW (CA) & 900 MW (AZ)	PV-NG @ 97.5% of contin. rating PV-KY @ 63.0% of contin. rating	Unstable Voltage collapsed in the Northwest	Exceeded stability limit
XM1,2&3C6 Decrement	1800 MW (4950 MW)	900 MW (CA)& 900 MW (AZ)	PV-NG @ 95.3% of contin. rating PV-KY @ 62.5% of contin. rating	Marginally stable and damped Malin 500KV dip @0.84pu (23% dip)	Reached stability limit Within thermal limit

EXHIBIT 3A

2002HS Palo Verde System Capability

Today's System And New Generation Projects

(Vadlidation of System Model and Data)

Case I.D.	New Generation Projects	Power Transfers To Areas	N-2 Stability Results	Case Comments
	Added 37 New Gen Units			
XM1,2&3A1M	3455 MW (3937 MVAR Capability)	2005 MW (AZ), 600 MW(Utah) and 850 MW (New Mexico & Colorado)	Malin 500KV dip @0.85pu (23% dip) PV 500KV dip @0.95 pu (11% dip)	Reached stability limit
XM1,2&3A2M	3555 MW	2105 MW (AZ,), 600 MW (Utah) 850 MW (New Mexico & Colorado)	Unstable Voltage collapsed in the Northwest	Exceeded stability Limit
XM1,2&3A3M	3455 MW	1000 MW (CA) & 2455 MW (AZ)	Malin 500KV dip @0.83pu (25% dip) PV 500KV dip @0.95 pu (11% dip)	Reached stability limit
XM1,2&3A4M	3555 MW	1000 MW (CA) & 2555 MW (AZ)	Voltage collapsed in Northwest first followed by the Arizona system	Unstable Exceeded stability limit
XM1,2&3A5&6M	3655 MW	Increased 100 MW More to AZ or CA	System collapsed in Arizona	PV instability hit first
	Added 19 New Gen Units			
XM1,2&3B1M	2600 MW (2259 MVAR Capability)	1000 MW (CA) & 1600 MW (AZ)	Malin 500KV dip @0.83pu (25% dip) PV 500KV dip @089 pu (17% dip)	Reached stability limit
XM1,2&3B2M	2700 MW	1000 MW (CA) & 1700 MW (AZ)	Voltage collapsed in the Northwest first followed by the Arizona system	Unstable Exceeded stability limit
XM1,2&3B3M	2800 MW	Increased 100 MW More to AZ or CA	System collapsed in Arizona	Unstable PV instability hit first
	Added 11 New Gen Units			
XM1,2&3C6M	1800 MW (1300 MVAR Capability)	900 MW (CA)& 900 MW (AZ)	Malin 500KV dip @ 0.88pu (20% dip) PV 500KV dip @085 pu (21% dip)	Reached stability limit
XM1,2&3C5M	1900 MW	1000 MW (CA)& 900 MW (AZ)	Malin 500KV dip @ 0.72pu (36% dip) PV 500KV dip @0.80 pu (26% dip)	Unstable Exceeded stability limit
XM1,2&3C7M	2000 MW	Increased 100 MW more to AZ	System collapsed in Arizona	Unstable PV instability hit first

EXHIBIT 3B
2000HS Palo Verde System Capability
Today's System And New Generation Projects
(Vadlidation of System Model and Data)

Case I.D.	New Generation Projects	Power Transfers To Areas	N-2 Stability Results	Case Comments
	Added 37 New Gen Units			
2000HS-PV07	3455 MW (3937 MVAR Capability)	2700 MW (AZ), 450 MW (NM) & 305MW (UT)	Malin 500KV dip @0.88pu (20% dip) PV 500KV dip @0.92 pu (14% dip)	Reached stability limit
2000HS-PV08	3555 MW	2700 MW (AZ), 450 MW (NM) & 405MW (UT)	System collapsed in Arizona	Exceeded stability Limit PV instability occurred first
	Added 19 New Gen Units			
2000HS-PV04	2600 MW (2259 MVAR Capability)	2600 MW to Arizona	Malin 500KV dip @0.93pu (15% dip) PV 500KV dip @0.89 pu (17% dip)	Within stability limit
2000HS-PV05	2700 MW	2700 MW to Arizona	Malin 500KV dip @0.86pu (22% dip) PV 500KV dip @084 pu (22% dip)	Reached stability limit
2000HS-PV06	2800 MW	2800 MW to Arizona	System collapsed in Arizona	Exceeded stability Limit PV instability occurred first
	Added 11 New Gen Units			
2000HS-PV01	1800 MW (1300 MVAR Capability)	1800 MW to Arizona	Malin 500KV dip @ 0.97pu (11% dip) PV 500KV dip @085 pu (21% dip)	Within thermal limit
2000HS-PV02	2000 MW	2000 MW to Arizona	Malin 500KV dip @0.90pu (18 dip) PV 500KV dip @076 pu (30% dip)	Reached stability limit
2000HS-PV03	2100 MW	2100 MW to Arizona	System Collapsed in Arizona	Exceeded stability Limit PV instability occurred first

EXHIBIT 4

COMPARISION OF BASE CASE MODELS

WATS 2002 HEAVY SUMMER EOR/SCIT NOMOGRAM LIMITS

Loadflow Case	Contingency	EOR	SCIT	WOR	PDCI	IPP DC	Midway-Vincent	North of Lugo	COI	NE/SE
WATS2002HS-02		(MW)	(MW)	(MW)	(MW)	(MW)	(MW)	(MW)	(MW)	(MW)
		6576	14443	6267	2735	1920	2963	620	4350	845
Study Scope		Transient Stability				Post-Transient Governor Loadflow				
	Class	Westwing 230	Pinnacle Pk 230	Devers SCE 230	Sylmar LA 230	Contingency	South Bay 69 @ 1.021 pu	Malin 500 @ 1.078 pu	Comments	
		Min V (~ Exceeding 20% V Dip)				MVAR Margin				
Pre-Disturbance	N-0	1.03	1.02	0.99	1.01	PV-Devers Out	298(@0.857pu)	--	Palo Vrtde-N.Gila @ 1403 amp(100.2% of Continuous Rating)	
PV-N.Gila Line Fault	N-1	0.96	0.97	0.91	0.98	_IV-Miguel Line Out	158(@0.897pu)	--		
Two Palo Verde Units	N-2	0.99	0.97	0.97	0.96	Two PV Units Out	--	380(@1.01pu)		
Two PV-WWG 500KV	N-2	0.95	0.95	0.91	0.99	Two SONG Out	357(@0.869pu)	--		

OTC 2000 HEAVY SUMMER EOR/SCIT NOMOGRAM LIMITS

Loadflow Case	Contingency	EOR	SCIT	WOR	PDCI	IPP DC	Midway-Vincent	North of Lugo	COI	NE/SE
OTC2000HS-02		(MW)	(MW)	(MW)	(MW)	(MW)	(MW)	(MW)	(MW)	(MW)
		6576	14443	6265	2735	1920	2967	619	4348	820
Study Scope		Transient Stability				Post-Transient Governor Loadflow				
	Class	Westwing 230	Pinnacle Pk 230	Devers SCE 230	Sylmar LA 230	Contingency	South Bay 69 @ 1.034 pu	Malin 500 @ 1.085 pu	Comments	
		Min V (~ Exceeding 20% V Dip)				MVAR Margin				
Pre-Disturbance	N-0	1.02	1.02	0.999	0.999	PV-Devers Out	315(@0.865pu)	--	Palo Vrtde-N.Gila @ 1402 amp(100.1% of Continuous Rating)	
PV-N.Gila Line Fault	N-1	0.96	0.97	0.92	0.96	_IV-Miguel Line Out	273(@0.877pu)	--		
Two Palo Verde Units	N-2	0.97	0.96	0.99	0.97	Two PV Units Out	--	438(@1.00pu)		
Two PV-WWG 500KV	N-2	0.95	0.95	0.93	0.99	Two SONG Out	373(@0.853pu)	--		

Exhibit 5

Proposed In-service Dates for the New Generation Projects

Sponsored Project By Company	Name	Facility Type	Capacity(MW)	Interconnection Points	Proposed In-Service Date
PNM/Merchant	-	Line	1,000	PV-Santa Ana (Noroeste)	Summer 2002
APS/SRP	Southwest Valley Project	Line	1,200	PV-Estrella	Summer 2003
PG&E Generating	Harquahala	Generation	1,160	Harquahala-PV	
		Unit 1			January-03
		Unit 2			February-03
		Unit 3			March-03
APS Generating	Red Hawk	Generation	2,000	Red Hawk - PV	
		Unit 1			June-02
		Unit 2			August-02
		Unit 3			June-05
		Unit 4			June-06
NRG Energy Inc.	Yuma West Project	Line	1,000	PV-Yuma West (Baja)	Spring 2002
Sempra Energy	Mesquite	Generation	1,000	Mesquite - PV	June-03
Duke Energy	Arlington	Generation	1,200	Arlington -PV	
		Unit 1			June-02
		Unit 2			October-04
Power Development Ent.	Gila Bend Power Project	Generation	550-770	Gila Bend Area-PV	3rd Qtr. 2003

Appendix A

Palo Verde Interconnection Study Plan

Salt River Project

Palo Verde Interconnection Study Plan

Prepared For the

Western Area Transmission System Task Force

December 8, 1999

Approved By WATS on December 8, 1999

Table of Contents

I. Introduction 3
II. Background 3
III. Study Approach 4
A. Screening Study 5
B. Study Effort 1 - Study Resource Responsibility 5
C. Study Effort 2 - Transmission Interconnector Responsibility 6
IV. Study Description 6
V. Study Plan Description 7
A. Power Flow Analysis 7
1. Study Objectives: 7
2. Study Scope/Methodology: 7
3. Study Assumptions: 10
4. Study Criteria: 11
B. Transient Stability Analysis 11
1. Study Objectives: 11
2. Study Scope/Methodology: 12
3. Study Assumptions 15
4. Study Criteria 15
C. Post-Transient Voltage Stability Analysis 16
1. Study Objectives 16
2. Study Scope/Methodology 16
3. Study Assumptions: 17
4. Study Criteria: 18
D. Short Circuit Analysis 19
1. Study Objectives: 19
2. Study Scope/Methodology: 19
3. Study Assumptions: 20
4. Study Criteria: 21
E. Subsynchronous Resonance Analysis (SSR) 21

Appendix 1 – List of Continuous and Emergency Ratings
Appendix 2 - Procedures for Requesting an Interconnection with the Palo Verde 500 kV Switchyard or ANPP Valley Transmission System

DRAFT

Palo Verde Interconnection Study Plan

I. Introduction

This study plan describes the technical study methodology, assumptions, and criteria requirements necessary for performing technical studies for transmission and generation interconnections to the Palo Verde 500kV switchyard or to the Arizona Nuclear Power Project (ANPP) Valley Transmission System. Based upon the requirements identified in the "Procedures for Requesting an Interconnection with the Palo Verde 500kV Switchyard or ANPP Valley Transmission System", the intent of the study plan is to identify the technical study requirements that the prospective interconnecting party will need to complete in order to interconnect with these Palo Verde Transmission System Facilities.

The Palo Verde Transmission System Engineering and Operating (PVTS E&O) Committee is responsible for both the Palo Verde 500 kV Switchyard and the ANPP Valley Transmission System. The Western Arizona Transmission Studies (WATS) Task Force serves as the technical planning and operating studies group to the PVTS E&O Committee and is responsible to the PVTS E&O for assessing the technical feasibility of a proposed interconnection to the Palo Verde Transmission System Facilities. Parties interested in interconnecting at the Palo Verde facility will work with WATS to assess the technical impact of the proposed new facilities on Palo Verde and its associated transmission facilities as well as EOR and WOR path ratings, as appropriate.

II. Background

The Palo Verde Generating Station is located approximately 35 miles southwest of the Phoenix Metropolitan area. It is comprised of three nuclear generating units with a net output of approximately 1270 MW each. The Palo Verde Transmission System Facilities include the Palo Verde 500 kV Switchyard, the ANPP Valley Transmission System (the Palo Verde-Westwing 500 kV #1 and #2 Transmission Lines, the Palo Verde-Kyrene 500 kV Transmission Line and the Kyrene 500 kV Switchyard), the Palo Verde-Devers 500 kV Transmission Line, and the Palo Verde-North Gila 500 kV Transmission Line.

Presently, there are ten interconnections being proposed for the Palo Verde 500kV Switchyard and the Palo Verde Transmission System Facilities. These proposed interconnections are summarized in Table 1.

Table 1

Company	Interconnection	Capacity (MW)	Interconnection Points	In-Service Date
PNM	Lines	1000	PV-Santa Ana (Noroeste)	Summer 2002
APS/SRP Transmission	Line	1200	PV-Estrella	Summer 2003
PG&E Generating	Generation	1160	Harquahala-Palo Verde	May 2002

APS Generating	Generation	2000	Unknown – PV	January 2002
NRG Energy Inc.	Line	1000	PV-CFE CETYS (Baja)	Spring 2002
Sempra Energy Resources	Generation	1000	Unknown - PV	June 2003
Duke Energy	Generation	650	Unknown -PV	June 2002
Power Development Enterprises	Generation	550-770	Gila Bend Area-PV	3rd Qtr. 2003
Delta Power Company	Generation	500	PV-Devers &/or PV-N. Gila	Unknown
Panda Gila River, LP	Generation	2000	Gila Bend Area-PV	June 2002

Due to the number of requested interconnections, a significant amount of study analysis will be required to assess the technical feasibility of the proposed interconnections on the Palo Verde facilities as well as the surrounding interconnected system. Up to this point in time, typical interconnection studies have been associated with assessing technical feasibility of one or two interconnections at the same time. Generally, the impact of the new facilities on the existing interconnected system would be assessed for both non-simultaneous and simultaneous impacts.

Clearly, the number of proposed interconnections at Palo Verde would make this type of assessment extremely study intensive. Due to the type of interconnections being proposed (transmission and generation) this study plan proposes an approach to study the proposed interconnections in a timely manner.

III. Study Approach

Technical studies are required of each party who desires to interconnect with a Palo Verde facility to assess the impact on Palo Verde and the surrounding interconnected AC system. Presently, there are ten interconnection requests to be addressed by WATS. Three of the requests are for transmission while the other seven requests are for some level of generation. Two of the transmission projects (APS/SRP, NRG) will be routed parallel to existing WSCC transmission system facilities while the third (PNM) will not. This is due to this project's termination in the Noroeste region of CFE's transmission grid, which is not synchronously connected to WSCC. The remaining seven generation interconnection requests are a mix between an interconnection directly to Palo Verde (APS, Duke, Sempra, PDE, PGR) and to existing Palo Verde Transmission facilities (PG&E, Delta). Overall, the only new transmission that the generation projects are installing in the system is that which is required to interconnect their facility to the Palo Verde Switchyard or an existing Palo Verde Transmission Facility.

While WATS has the responsibility of reviewing and providing recommendations to the Palo Verde E&O Committee on all technical studies related to the proposed interconnections, it does not have the authority or resources to perform such work on its own. As such, the responsibility for performing all technical studies rests with the interconnectors. WATS, in recognizing the complexity of the numerous study combinations, has suggested that a single Study Resource be selected to support and

conduct the required technical studies. The Study Resource, with funding by the interconnecting parties, would perform or have performed, assigned studies as outlined in this study plan.

It is recognized that a significant effort will be required to complete the necessary studies to establish an interconnection at Palo Verde. These studies are technically significant and will require detailed analysis and review by WATS over a number of months to complete. However, due to the number of Palo Verde interconnections being requested, it is unclear how much additional generation the existing Palo Verde Transmission System can accommodate, even with the addition of the proposed three transmission facilities. It is proposed that a "Screening Study" be performed to provide a quick assessment of technical viability of the proposed generation and transmission interconnections. The "Screening Study" would be performed by SRP on behalf of the WATS and Interconnecting parties as the Study Resource.

In recognition of the above, this study plan proposes that the technical study requirement be separated into three study parts, "Screening Study", "Study Effort 1 - Study Resource Responsibility", and "Study Effort 2 - Transmission Interconnector Responsibility". The following describes the general study scope for each of the study efforts.

A. Screening Study

The objective of the Screening Study is to provide a quick assessment of the technical viability of all proposed interconnections at Palo Verde. This study will quickly determine how much additional generation can be accommodated by the existing system with and without the proposed transmission interconnections at Palo Verde. The study will be performed by SRP using WATS approved base cases. Study analysis will be limited, based on power flow, transient stability, and post transient studies using one or two critical disturbances, as determined by SRP. All methodologies, assumptions, criteria, and guidelines outlined in this study plan will be followed to perform the Screening Study. SRP will document all studies and will present the study results to the WATS members and the Interconnectors. It is expected that WATS and the Interconnectors will initiate Study Efforts 1 and 2 upon the acceptance of the Screening Study.

B. Study Effort 1 - Study Resource Responsibility

Study Effort 1 is a detailed study whose primary focus will be to:

- Identify the impact of the proposed generation on the existing Palo Verde Transmission System Facilities
- Identify the impact of all three transmission projects together on the Palo Verde Transmission System Facilities.
- Identify the impact of all projects, generation and transmission, on the Palo Verde Transmission System Facilities.

Study Effort 1 will establish the maximum amount of generation that can be accommodated by the existing Palo Verde Transmission System. This is considered appropriate since all proposed generation projects are seeking only to interconnect at Palo Verde or on its transmission facilities and are not building any new transmission that parallels existing transmission facilities. Because some of the generation projects are proposing an interconnection to existing Palo Verde Transmission Facilities, sensitivity studies must be

performed to assess how this would change established results. If the sensitivity studies show a negligible change in results, no further analysis beyond those already performed are needed. However, if results are significantly different, then additional studies will be required to fully assess the impact of the different generation interconnection locations.

Based on existing WSCC Policies and Procedures for Rating Transmission Facilities, a proposed transmission project must address issues, concerns, and impacts of other transmission projects being developed in the same time frame. Given that all three transmission projects are proposing an interconnection at Palo Verde and that they are all at the same point in their development, studies with all three projects together must be performed.

Finally, the evaluation of all proposed interconnections will be performed. Due to the large amount of planned generation (approximately 8000 MW), it is expected that the existing transmission facilities will not accommodate the full compliment of planned generation in the area. Not withstanding this limitation, the focus of this study effort will be to determine the amount of generation that can be accommodated by the three proposed transmission projects without adversely impacting Palo Verde facilities or EOR/WOR path ratings. If required, additional studies to identify possible transmission mitigation alternatives to accommodate all planned generation at Palo Verde may be performed if WATS and/or the Interconnectors require it.

C. Study Effort 2 - Transmission Interconnector Responsibility

This step would evaluate the impact of the proposed transmission projects on the existing system, individually and as a whole. It is recognized that the evaluation of transmission facilities is somewhat more complex than evaluating the impact of generation. In this case, the characteristics of the generation proposals allow them to be assessed as a whole. This is not the case for the transmission projects. They must be assessed separately and together in order to quantify their full impact on existing facilities as well as to establish ratings for each of the lines as encouraged by WSCC.

The transmission owners must take study responsibility for their individual projects to demonstrate their technical feasibility for interconnecting to Palo Verde facilities. It is expected that each transmission project will demonstrate that it does not impact the existing interconnected system and meets all required transmission planning criteria independently of the other proposed interconnections. These "independent" studies will follow the study methodology, criteria, and assumptions outlined in this study plan.

IV. Study Description

Prior to obtaining an approval for an interconnection from the Palo Verde Transmission System E&O Committee, comprehensive technical studies must be performed to assess the technical impact of each project on Palo Verde and its associated transmission system. Per the established Palo Verde Interconnection Procedures, preliminary and detailed studies are required to fully assess the impact of an interconnection on Palo Verde and its transmission facilities. The intent of this study plan is to facilitate the completion of the Preliminary Study requirements for the interconnection requests.

The preliminary study will be comprised of the following five parts of technical analyses:

- Power flow analysis

- Transient stability analysis
- Post-transient power flow analysis
- Short circuit analysis
- Subsynchronous resonance analysis

The purpose of the Preliminary Study is to determine if the proposed interconnections are technically viable and to define the plan of service necessary to reliably utilize an interconnection with the Palo Verde transmission system to bring power into either the California or Arizona load centers.

This study plan is prepared to document the specific study objectives, study scope including study methodology, and study assumptions/criteria for each of the following technical analyses that will be performed.

V. Study Plan Description

A. Power Flow Analysis

1. Study Objectives:
   The following are the objectives of the power flow analysis:

   a) Determine that there is no significant adverse impact or additional system modification requirements to the Arizona EHV lines that result from the proposed generation and/or transmission projects.

   b) Determine the impact on the EOR operating transfer capability and, if appropriate, its non-simultaneous rating. System performance impact can be determined by comparing system performance for a California import scenario with a Arizona/New Mexico import scenario.

   c) Develop necessary power flow base cases for transient stability, post-transient, and short-circuit analyses.

2. Study Scope/Methodology:

   a) Impact on the Phoenix EHV System (Arizona/New Mexico Power Import Scenario)

      A pre-project benchmark base case will be developed to represent a 2002 heavy summer condition with heavy Arizona/Phoenix power imports. The case will model stressed Four Corners-West and Palo Verde to the Phoenix Valley transmission paths. Pre-project and post-project configurations and will be studied. The post-project cases will represent proposed Palo Verde Generation Projects with the existing transmission system and with the proposed transmission projects, with power sales to APS/SRP/TEP on a 40/40/20 % split. The new generation output will be scheduled to Arizona/New Mexico to the extent possible without exceeding established WSCC/NERC operating limits. To accommodate the Palo Verde generation, Arizona/New Mexico load will be increased to 105% of projected summer peak and, if necessary, local, remote or purchased generation will be displaced.

A single contingency (N-1) analysis will be conducted to evaluate whether the system performance is in conformance with the WSCC/NERC Reliability Criteria. A list of the transmission facility outages is shown below:

- Outage of the Palo Verde-Kyrene 500 kV line
- Outage of one Palo Verde-Westwing 500 kV line

b) Impact on the EOR System (California Power Import)

A pre-project benchmark base case will be developed to represent a 2002 heavy summer condition with EOR at its thermal limit for N-0 and N-1 outage conditions. To achieve pre-project EOR transfers, load in Arizona/New Mexico will be reduced by an amount up to but not exceeding 2000 MW to simulate the necessary resources for stressing the EOR system. Post-project cases will be developed by adding new generation at Palo Verde concurrent with reducing the Arizona/New Mexico load reduction needed to create the pre-project case by an equal amount. The power sales to PG&ESCE/LADWP/SDG&E for the post-project cases will be based on 40%/40%/10%/10% split.

The following N-1 contingency power flow on the Arizona/California EHV system for the pre-and post-project base case will be simulated and compared:

a) Outage of the Palo Verde-Devers 500 kV line

b) Outage of the Palo Verde-N.Gila 500 kV line

c) Outage of the Navajo- Crystal 500 kV line

d) Outage of the Crystal-McCullough 500kV line

e) Outage of the Moenkopi-Eldorado 500 kV line

f) Outage of the Perkins-Mead 500 kV line

g) Outage of the Palo Verde-PG&E Gen 500 kV line

h) Outage of the PG&E Gen-Devers 500 kV line

i) Outage of the Red Butte-Harry Allen 345kV line

j) Outage of the Imperial Valley – Miguell 500kV line and subsequent tripping of the Imperial Valley – La Rosita 230kV line.

c) EOR = 7550 MW Case

A pre-project benchmark 2002 base case with an EOR flow of 7550 MW will be prepared. Adjustments of generation schedules, loads, etc. will be made to achieve an EOR flow of 7550 MW. This case will be used to study the impact of proposed generation and transmission projects on the EOR path. The objective of this study is to verify that the maximum WOR path flow of 10118 will still be valid after the addition of the proposed generation projects with and without the proposed transmission projects. The post-project cases will include the proposed generation projects with and without the proposed transmission projects. The change in Southern California import/export schedules will be made with PG&E/SCE/LADWP/SDG&E through a

40%/40%/10%/10% split. The following N-1 contingency power flow on the Arizona/California EHV system for the pre-and post-project base case will be simulated and compared.

i. Outage of the Palo Verde-Devers 500 kV line
ii. Outage of the Palo Verde-N.Gila 500 kV line
iii. Outage of the Navajo- Crystal 500 kV line
iv. Outage of the Crystal-McCullough 500kV line
v. Outage of the Moenkopi-Eldorado 500 kV line
vi. Outage of the Perkins-Mead 500 kV line
vii. Outage of the Palo Verde-PG&E Gen 500 kV line
viii. Outage of the PG&E Gen-Devers 500 kV line
ix. Outage of the Red Butte-Harry Allen 345kV line
x. Outage of Imperial Valley – Miguel 500 kV line and subsequent tripping of the Imperial Velly – La Rosita 230 kV line.
xi. Outage of Liberty – Mead 345 kV line

d) WOR = 10118 MW Case

A pre-project benchmark 2002 base case with a WOR flow of 10118 MW will be prepared. Adjustments of generation schedules, loads, etc. will be made to achieve an WOR flow of 10118 MW. This case will be used to study the impact of proposed generation and transmission projects on the WOR path. The objective of this study is to verify that the maximum WOR path flow of 10118 will still be valid after the addition of the proposed generation projects with and without the proposed transmission projects. The post-project cases will include the proposed generation projects with and without the proposed transmission projects. The change in Southern California import/export schedules will be made with PG&E/SCE/LADWP/SDG&E through a 40%/40%/10%/10% split. The following N-1 contingency power flow on the Arizona/California EHV system for the pre-and post-project base case will be simulated and compared.

i. Outage of the Palo Verde-Devers 500 kV line
ii. Outage of the Palo Verde-N.Gila 500 kV line
iii. Outage of the Navajo- Crystal 500 kV line
iv. Outage of the Crystal-McCullough 500kV line
v. Outage of the Moenkopi-Eldorado 500 kV line
vi. Outage of the Perkins-Mead 500 kV line
vii. Outage of the Palo Verde-PG&E Gen 500 kV line
viii. Outage of the PG&E Gen-Devers 500 kV line
ix. Red Butte-Harry Allen 345kV line
x. Outage of Imperial Valley – Miguel 500 kV line and subsequent tripping of the Imperial Velly – La Rosita 230 kV line.
xi. Outage of Liberty – Mead 345 kV line

3. Study Assumptions:
The following assumptions are the basis for this power flow study:

a) 99HS025 base case developed for the 1999 summer Operational Transfer Capability (OTC) studies will used to develop the 2002 heavy summer pre-Project benchmark base case. Southwest loads and system representation will be updated to reflect the 2002 heavy summer time frame. The case will represent the Desert Basin, El Dorado, South Point, and Griffith generation projects and their associated transmission facilities will be incorporated into the base case. For this study, generation output at these plants will be zero.

b) The proposed new generation at Palo Verde will be based upon data provided by the project Interconnectors.

Maximum Output	?? MW (Winter)	?? MW (Summer)
Qmax	?? Mvar	?? Mvar
Qmin	?? Mvar	?? Mvar
Step-up Transformers	?? MVA	0.?? Per unit reactance

c) All generating plants will be connected radial to the Palo Verde 500 kV switchyard except for the sensitivity studies with plants looped into the Palo Verde-Devers, Palo Verde-N. Gila, or Palo Verde-Kyrene 500kV lines. To recognize the confidentiality of exact plant locations, the loop in sensitivities will assume a location approximately 10 miles from Palo Verde for ALL plants. Final plant locations will be required to complete the Detailed Transmission Studies.

d) Methods used to increase the Phoenix import levels are:

i. Use available generation reserve or decrease load in New Mexico to stress Four Corners-West and Palo Verde-Phoenix Valley transmission paths.

ii. Add new generation at Palo Verde in the post-generation project case.

iii. Increase Phoenix Valley load to 105% of project summer peak and, if necessary, back off generation in the Phoenix Valley.

e) Methods used to stress the EOR transmission path are:

i. Schedule from the east and north of the Four Corners area until the Four Corners-West transmission system limit is reached. Use available Arizona/New Mexico generation reserve or area load reduction to achieve additional stressing, as necessary.

ii. Schedule power to PG&E/SCE/LADWP/SDG&E based on a 40%/40%./10%/10% split.

iii. Reduce generation in the PG&E/SCE/LADWP/SDG&E areas accordingly.

4. Study Criteria:
The following criteria will be used to evaluate the power flow performance of the system:

a) Normal Conditions

i. Under normal conditions, bus voltages must be maintained between 0.95 p.u. and 1.05 p.u. except for the Palo Verde 500kV bus voltages which must be maintained between 1.0 p.u. and 1.02 p.u. (525kV base). Voltages for all other 500kV buses in the Southwest region cannot exceed 1.09 p.u. (525kV base).

ii. All line and transformer loading must be below normal continuous ratings.

iii. The net VAR flow interchange with each interconnected utility shall be within limits established by the transmission owners.

iv. Sufficient transmission capacity will be provided without relying on or unduly imposing upon any other utility's transmission system.

v. The transmission system will not result in an adverse impact on other major WSCC path flow limits.

b) Single Contingency Outage Conditions

i. For a single contingency, no transmission element will be loaded above its emergency rating.

ii. Established loading limits for other utilities will be observed.

iii. Equipment emergency voltage limits (high or low) will not be exceeded for single contingency outages.

iv. Bus voltage deviations from the base case voltage shall not exceed established planning limits. (These limits may vary throughout the system).

v. Single contingency outages on the 230 kV and EHV systems will not result in loss of load unless allowed by that system.

A list of continuous and emergency ratings for the major transmission elements, and a table showing minimum voltage limits for the critical buses in Arizona, Southern Nevada and Southern California is provided in Appendix 1.

B. Transient Stability Analysis

1. Study Objectives:
The following are the objectives of this transient stability analysis:

a) Determine that there is no significant impact on Palo Verde Nuclear Plant stability that results from the proposed generation and/or transmission projects. It is important to point out that specific requirements exist to ensure that grid changes do not have an adverse effect on Palo Verde nuclear safety. These requirements are described in Palo Verde's "Procedures for Requesting an Interconnection with the Palo Verde 500kV switchyard or ANPP Valley Transmission System". They include requirements for

PVNGS to prepare a safety evaluation and submit an undated Final Safety Analysis Report (FSAR) to the Nuclear Regulatory Commission (NRC) to reflect the effect of the change on stability and voltage. A copy of the Palo Verde Interconnection Procedures are included as Appendix 2.

b) Determine if the projects impact the EOR/SCIT stability limit

c) Evaluate whether the projects affect simultaneous transfer limits as a result of a two Palo Verde generator outage.

2. Study Scope/Methodology:

a) Impact on the Palo Verde Stability Performance

A transient stability analysis will be performed to investigate the Palo Verde generator stability for both the pre and post-project(s) configuration with the anticipated 2002 heavy summer normal operating conditions. An application of 7% generation margin will be added to the three Palo Verde generators in developing the pre-disturbance power flow bases cases. Therefore, major path flows for those base cases used in testing plant stability should be at their established flows plus a participant share of the 7% generation margin. The post-generation project cases will include their output in terms of power sales to either California or Arizona.

The following is a list of major disturbances that will be simulated in order to evaluate the Palo Verde stability performance.

<u>N-1 Disturbances</u>

i. Three-phase normally cleared fault on the Palo Verde-N. Gila 500 kV line

ii. Three-phase normally cleared fault on the Palo Verde-Devers 500 kV line

iii. One Palo Verde unit trip

<u>N-2 Disturbances</u>

i. Three-phase fault on the Palo Verde 500 kV bus with outage of both Palo Verde- Westwing 500 kV #1&2

ii. No fault and simultaneous outage of two Palo Verde generators

iii. Three-phase fault on the Palo Verde 500kV bus with outage of the Palo Verde-N. Gila and Palo Verde-CFEW CETYS 500kV lines

<u>Multiple Outage Disturbances</u>

i. Three-Phase fault on the Perkins 500 kV bus with outages of the Perkins-Mead 500 kV line and Two Palo Verde-Westwing 500 kV lines (contingency due to line crossing)

ii. The opportunity for multiple contingencies and associated mitigation measures (greater than N-2) should be assessed to demonstrate Palo Verde plant stability and impact on the existing ANPP transmission system.

One Palo Verde Unit (PVNGS FSAR)

It is also necessary to evaluate the voltage effect at the Palo Verde 500kV Switchyard as a result of tripping a Palo Verde generator with neither of the other Palo Verde generators on line in order to ensure that the post-trip voltage is sufficient to support Palo Verde safety functions.

b) Impact on the EOR/SCIT stability limit

Transient stability studies will be performed to assess the impact on the dynamic performance of the heavily stressed EOR/SCIT systems under the projected 2002 summer conditions. A pre-project benchmark base case will be established to represent the EOR/SCIT stability limit. The study will determine the most critical fault condition that would limit the EOR/SCIT stability limit. A dynamic simulation of the same critical fault on a post-project case with generation sales to California will be evaluated and compared to the pre-project benchmark case.

This stability impact study will follow the California ISO's study guidelines and methodology for adjusting EOR and SCIT flows. The details are described in the California Operating Studies Subcommittee (OSS) Handbook.

c) Impact on the Simultaneous Transfer Limits

Transient stability studies will be also conducted to assess the impact on the EOR/SCIT/COI transfer limits due to:

i. The outage of two Palo Verde generators

ii. Three-phase fault on the Palo Verde bus cleared by loss of the Palo Verde-Westwing #1 and #2 500kV lines.

Recent WSCC OTC studies have indicated that a simultaneous trip of two Palo Verde generators would result in a severe voltage depression in the Northwest Subregion which could result in the loss of the California-Oregon Intertie (COI). It should also be noted that this particular outage might exacerbate existing mutual interactions that currently exist between some major WSCC paths under heavy power flows condition.

A number of stability simulation cases will be run to determine the EOR/SCIT/COI simultaneous limit for the pre and post-project system configuration. An application of the northwest FACRI Scheme will be incorporated in the dynamic simulation runs.

d) Impact on EOR = 7550 MW Case

This case will be used to study the impact of proposed generation and transmission projects on the EOR path. The objective of this study is to verify that the maximum EOR path flow of 7550 MW will still be valid after the addition of the proposed generation projects with and without the proposed transmission projects. The post-project cases will include the proposed generation projects with and without the proposed transmission projects. The change in Southern California import/export schedules will be made with PG&E/SCE/LADWP/SDG&E through a 40%/40%/10%/10% split. The following N-1 contingency power flow on the Arizona/California EHV system for the pre-and post-project base case will be simulated and compared.

i. Outage of the Palo Verde-Devers 500 kV line

ii. Outage of the Palo Verde-N.Gila 500 kV line

iii. Outage of the Navajo- Crystal 500 kV line

iv. Outage of the Crystal-McCullough 500kV line

v. Outage of the Moenkopi-Eldorado 500 kV line

vi. Outage of the Perkins-Mead 500 kV line

vii. Outage of the Palo Verde-PG&E Gen 500 kV line

viii. Outage of the PG&E Gen-Devers 500 kV line

ix. Red Butte-Harry Allen 345kV line

x. Outage of Imperial Valley – Miguel 500 kV line and subsequent tripping of the Imperial Velly – La Rosita 230 kV line.

xi. Outage of Liberty – Mead 345 kV line

e) Impact on WOR = 10118MW Case

This case will be used to study the impact of proposed generation and transmission projects on the WOR path. The objective of this study is to verify that the maximum WOR path flow of 10118 will still be valid after the addition of the proposed generation projects with and without the proposed transmission projects. The post-project cases will include the proposed generation projects with and without the proposed transmission projects. The change in Southern California import/export schedules will be made with PG&E/SCE/LADWP/SDG&E through a 40%/40%/10%/10% split. The following N-1 contingency power flow on the Arizona/California EHV system for the pre-and post-project base case will be simulated and compared.

i. Outage of the Palo Verde-Devers 500 kV line

ii. Outage of the Palo Verde-N.Gila 500 kV line

iii. Outage of the Navajo- Crystal 500 kV line

iv. Outage of the Crystal-McCullough 500kV line

v. Outage of the Moenkopi-Eldorado 500 kV line

vi. Outage of the Perkins-Mead 500 kV line

vii. Outage of the Palo Verde-PG&E Gen 500 kV line

viii. Outage of the PG&E Gen-Devers 500 kV line

ix. Red Butte-Harry Allen 345kV line

x. Outage of Imperial Valley – Miguel 500 kV line and subsequent tripping of the Imperial Velly – La Rosita 230 kV line.

xi. Outage of Liberty – Mead 345 kV line

f) Impact on SCIT = 13500MW Case

A pre-project benchmark 2002 base case with a SCIT flow of 13??? MW will be prepared. Adjustments of generation schedules, loads, etc. will be made to achieve an SCIT flow of 13???? MW. This case will be used to study the impact of proposed generation and transmission projects on the SCIT path. The post-project cases will include the proposed generation projects with and without the proposed transmission projects. The change in Southern California

import/export schedules will be made. The objective of the SCIT study is to verify that the existing Southern California (SCIT) Nomogram will still be vaid after the addition of the proposed generation projects with and without the proposed transmission projects.

The following N-1 contingency for the pre-and post-project base case will be simulated and compared:

i. N-1: Outage of the Palo Verde-Devers 500 kV line

ii. N-1: Outage of the Palo Verde-N. Gila 500 kV line

iii. N-1: Outage of the Imperial Valley-Miguel 500 kV and Imperial Valley – La Rosita 230 kV lines

iv. N-2: Outage of two Palo Verde generators

v. N-2: Outage of two San Onofore generators

vi. N-2: Outage of the IPP DC line

3. Study Assumptions

The following assumptions will be used for this stability study:

a) The 99HS025.dyd developed for the WSCC 1999 summer Operational Transfer Capability (OTC) studies will be modified to reflect a 2002 system configuration. This data will be used for all the dynamic simulation runs.

b) The dynamic data for the generator turbine, governor, excitation system and power system stabilizer will be provided by the project owners and will be incorporated into the stability data deck.

c) All stability simulation cases will be run for a minimum of 10 seconds.

4. Study Criteria

The following criteria will be used to evaluate the stability performance:

a) All machines in the system shall remain in synchronism as demonstrated by their relative rotor angles.

b) System stability is evaluated based on the damping of the relative rotor angles and the damping of the voltage magnitude swings.

c) The transient voltage dip should be maintained above 0.80 p.u. at Adelanto and Sylmar.

d) Other transient voltage dips must meet the following WSCC/NERC Reliability Criteria:

Performance Level	Disturbance	Transient Voltage Dip Criteria
A	N-1	Max Duration of V Dip 20%-20Cycles
C	N-2	Max Duration of V Dip 20%-40Cycles

C. Post-Transient Voltage Stability Analysis

1. Study Objectives

   The following are the objectives for the Post Transient Voltage Stability Analysis.

   a) Determine whether the project(s) will impact the voltage stability performance and the requirement of reactive power margin in the Phoenix metropolitan area for the projected heavy summer import conditions.

   b) Determine whether the project(s) will impact on the EOR/SCIT nomogram limit. This nomogram limit will be based on the post-transient reactive margins that are required to meet the WSCC/NERC post-transient voltage criteria.

2. Study Scope/Methodology

   The following two study efforts will be undertaken to examine the post-transient voltage impacts on the proposed interconnections at Palo Verde.

   - A post-transient power flow (P-V) analysis will be performed to determine if the voltage deviations at critical buses meet the maximum allowable voltage dip criteria for N-1 and N-2 disturbances.
   - A Q-V analysis will be performed to determine if sufficient reactive margin exists at critical buses to prevent potential voltage collapse.

   a) Impact on the Phoenix Post-Transient Voltage Stability Performance

   A post-transient voltage stability analysis will be performed to investigate the Phoenix area transmission system for both the pre and post-project scenarios for heavy Phoenix import conditions. The heavy import to Phoenix transfer base cases used to establish the power flow limits will be used.

   The following is a list of selected major outages that will be simulated:

   - N-1: Outage of the Palo Verde-Kyrene 500 kV line
   - N-2: Outage of both Palo Verde-Westwing 500 kV lines

   b) Impact on the EOR/SCIT Nomogram Limit

   A post-transient voltage stability analysis will be performed to determine the EOR/SCIT nomogram limits for both the pre and post-project scenarios. The procedures will be the same as those used in the transient stability study.

   The following is a list of selected major outages that will be simulated:

   - N-1: Outage of the Palo Verde-Devers 500 kV line
   - N-1: Outage of the Palo Verde-N. Gila 500 kV line
   - N-1: Outage of the Imperial Valley-Miguel 500 kV line and Imperial Valley – La Rosita 230kV lines.
   - N-2: Outage of two Palo Verde generators
   - N-2: Outage of two San Onofre generators
   - N-2: Outage of the IPP DC line

c) Impact on SCIT – 13500MW Case

This case will be used to study the impact of proposed generation and transmission projects on the SCIT path. The post-project cases will include the proposed generation projects with and without the proposed transmission projects. The change in Southern California import/export schedules will be made. The objective of the SCIT study is to verify that the existing Southern California (SCIT) Nomogram will still be vaid after the addition of the proposed generation projects with and without the proposed transmission projects.

The following N-1 contingency for the pre-and post-project base case will be simulated and compared:

i. N-1: Outage of the Palo Verde-Devers 500 kV line

ii. N-1: Outage of the Palo Verde-N. Gila 500 kV line

iii. N-1: Outage of the Imperial Valley-Miguel 500 kV and Imperial Valley – La Rosita 230 kV lines

iv. N-2: Outage of two Palo Verde generators

v. N-2: Outage of two San Onofore generators

vi. N-2: Outage of the IPP DC line

3. Study Assumptions:

The assumptions based on the following considerations will be modeled in the studies:

a) All loads will be modeled as constant power during the first few minutes following an outage or disturbance.

b) All voltages at distribution substations will be restored to normal values by the transformer tap changers and other voltage control devices.

c) Generator var limits will be modeled as a single value for each generator since the reactive power capability curve will not be modeled in the power flow program.

d) There will be no manual operator intervention to increase the generator var output.

e) Remedial actions such as generator dropping, load shedding and blocking of automatic generation control (AGC) will not be considered.

f) Alpha min and Gamma min of the PDCI and IPPDC will be adjusted to 5 degrees and 13 degrees, respectively.

g) Fixed shunt capacitors (132 MVAR) at Adelanto and Marketplace will be switched in if the post-transient voltage deviation exceeds 5% at those buses.

h) Other Assumptions

- Area Interchange: Disabled
- Governor Blocking: Per WSCC Modeling & Validation Work Group recommendations - Diablo, Palo Verde, and San Onofre
- DC Line Transformer Tap Automatic Adjustment: Enabled
- Generator Voltage Control set to local except for San Onofre, Palo Verde, and selected Northwest generation
- Phase Shifter Control: Disabled
- Switched Shunt Devices: Switching disabled - except in Sierra Pacific Power's system

4. Study Criteria:
The following criteria will be used to evaluate the post-transient voltage stability performance:

a) The transient voltage dips should meet the following WSCC/NERC Reliability Criteria: (See the details provided in Section III, References)

Performance Level	Disturbance	Post Transient Voltage Deviations
A	N-1	5%
C	N-2	10%

b) As defined by the WSCC/NERC Reactive Margin Guidelines, the post-disturbance power flow performance must maintain the following reactive power margin requirements at the critical buses:

California Critical 500kV Buses		
Performance Level	Disturbance	Post-Transient Reactive Margin Requirements
A	N-1	500 MVAR(except Miguel 500kV for 250MVAR)
C	N-2	250 MVAR(except Miguel 500kV for 125 MVAR)

San Diego Interim Voltage Stability Criteria		
Performance Level	Disturbance	Post-Transient Reactive Margin Requirements
A	N-1	150 MVAR (@Encina 138 kV, Encina 230 kV, South Bay 69 kV, South Bay 138 kV, and Miguel 230kV)
C	N-2	75 MVAR (@Encina 138 kV, Encina 230 kV, South Bay 69 kV, South Bay 138 kV, and Miguel 230kV)

Arizona Critical 230kV Buses		
Performance Level	Disturbance	Post-Transient Reactive Margin Requirements
A	N-1	205 MVAR(@ Pin.Peak, Kyrene & Silver King)
C	N-2	103 MVAR(@ Pin.Peak, Kyrene & Silver King)

Northwest Malin 500kV Bus		
Performance Level	Disturbance	Post-Transient Reactive Margin Requirements
C	N-2	250 MVAR(for outage of two Palo Verde units)

D. Short Circuit Analysis

1. Study Objectives:
   The following are the objectives of this short circuit analysis:

   a) Determine the impact on the circuit breaker duties at substations within two buses away from the interconnection point of the proposed project. Impact on circuit breaker duties beyond two buses away will be the responsibility of the facility owner.

   b) Identify the requirements including replacements and upgrades of the existing 500 kV circuit breakers at the Palo Verde 500 kV Switchyard as impacted by the proposed project.

2. Study Scope/Methodology:

   a) The system data will be based on the pre-project system configuration, derived from the 1999 Heavy Summer power flow WATS base case. The model will be modified as necessary to include any later changes. Additional generation will be added to provide a "worst case" model. The Post-project model will be obtained by making appropriate changes to the pre-project model.

   b) The system elements represented in the model will be lines, transformers, generators and loads. Each element will be represented as a complex impedance in the three symmetrical component networks (positive, negative, and zero sequences).

   c) The positive sequence impedance data will be obtained from the power flow data. The zero sequence impedance data will be obtained from the appropriate sources, and other previous studies. Additional data will be obtained from the WATS members and the proposed project study participants. Negative sequence data will be assumed to be the same as the positive sequence impedance data.

   d) All impedances will be expressed in per unit on a 100 MVA base. The base voltage for each impedance will be the nominal voltage

for that part of the system in which the impedance occurs. Some base voltages are 69kV, 115kV, 138kV, 230kV, 287kV, 345kV, and 525 kV.

e) Substation one-line diagrams and the latest breaker nameplate data will be obtained from the WATS members and proposed project study participants.

f) The ASPEN short circuit program will used by SRP to compute three-phase, single phase-to-ground, and line-out faults.Other short circuit analysis programs may be used as appropriate.

g) The maximum stress to which a breaker is exposed will be determined by comparing the maximum fault current that the breaker may see to the adjusted interrupting capacity of the breaker.

h) The breaker adjusted interrupting capacities will be calculated in accordance with the following items:

   i. ANSI Standard C37.5-1979 for total rated breakers.

   ii. ANSI Standard C37.010-1979 for symmetrical rated breaker.

   iii. Voltage range factor, k.

   iv. Interrupting time of the breaker in cycles.

   v. Breaker reclosing duty.

   vi. System X/R ratio at the breaker location.

   vii. Maximum system voltage. Some values for this voltage are 72kV, 242kV, 300kV, and 535kV.

i) The maximum fault current for each breaker will be determined by placing a fault on one side of the breaker and then the other side to find the worst location. The opening of the remote end of a line prior to the opening of the breaker being evaluated will be considered when appropriate.

3. Study Assumptions:

a) Shunt capacitor banks will be omitted at all stations. Normally, shunt capacitors produce a minimal effect on fault currents. When they are large enough to be significant, their effect is to reduce total fault current. Results are more conservative to neglect them altogether.

b) Shunt reactors will also be neglected as their contribution is minimal.

c) Reactors connected to auto-transformer delta tertiary windings will be neglected since they cannot contribute fault current to the system.

d) Phase shifting transformers will be bypassed as this would be the worst case from the fault current standpoint.

e) If zero sequence data is not available, the assumption will be made that Xo=3X1 and Ro=0 or R1.

4. Study Criteria:
Circuit breakers exposed to fault currents in excess of 100 percent of their interrupting capacities will be replaced or upgrade whichever is appropriate.

E. Subsynchronous Resonance Analysis (SSR)

It is proposed that Arizona Public Service be contracted to perform the necessary SSR studies for all proposed interconnections to Palo Verde or its transmission facilities. The Study Resource will be responsible for managing the SSR study effort.

The objectives of the SSR studies are to determine the following:

- The impact on the induction generator problem
- The impact on the torsional interaction problem
- The impact on the transient torque problem

This SSR study will consist of the following two different types of analyses:

- Frequency scanning
- EMTP

The scope of these studies is limited to an evaluation of SSR for the Palo Verde units and all proposed generation at the Palo Verde bus. The evaluation of the SSR problem will include normal system operation as well as single, double, and multiple transmission line and generator contingency situations.

Appendix 1

List of Continuous and Emergency Ratings

Appendix 2

Palo Verde Interconnection Procedures

Procedures for Requesting an Interconnection

with the

Palo Verde 500 kV Switchyard

or

ANPP Valley Transmission System

Procedures for Requesting an Interconnection with the Palo Verde 500 kV Switchyard or ANPP Valley Transmission System

Table of Contents

	Page
Introduction	**1**
Responsible Operating Agent	**1**
Transmission Interconnection Request	**2**
Generation Interconnection Request	**6**
Interconnection Request Flow Chart	**Attachment A**
Palo Verde Nuclear Generating Station Switchyard Interconnection Regulatory Design Requirements	**Attachment B**

Introduction

The following provides a process for reviewing and approving transmission or generation interconnections to the Palo Verde 500 kV Switchyard or to the ANPP Valley Transmission System. The goal of this process is to identify the steps that a prospective interconnection party (Interconnector) will need to perform in order to interconnect with these Palo Verde Transmission System Facilities. In evaluating a request for interconnection, the Palo Verde Transmission System (PVTS) E&O Committee will consider only the technical feasibility and compliance with applicable planning and reliability criteria.

The PVTS E&O Committee is responsible for both the Palo Verde 500 kV Switchyard and the Palo Verde Transmission System. The Western Arizona Transmission Studies (WATS) Task Force serves as the technical planning and operating studies group to the PVTS E&O Committee and is responsible to the PVTS E&O for assessing the technical feasibility of a proposed interconnection to the Palo Verde Transmission System Facilities. Requests will be considered in the order in which they are received by the Chair of the Palo Verde Transmission System E&O or the Operating Agent of the respective Palo Verde Transmission System Facility.

The Palo Verde Transmission System Facilities include the Palo Verde 500 kV Switchyard, the ANPP Valley Transmission System (the Palo Verde-Westwing 500 kV #1 and #2 Transmission Lines, the Palo Verde-Kyrene 500 kV Transmission Line and the Kyrene 500 kV Switchyard), the Palo Verde-Devers 500 kV Transmission Line, and the Palo Verde-North Gila 500 kV Transmission Line. Requests to interconnect with the Palo Verde 500 kV Switchyard or with a component of the ANPP Valley Transmission System shall follow the procedures set forth in this document. Requests to interconnect with the Palo Verde-Devers 500 kV Transmission Line, the Palo Verde-North Gila 500 kV Transmission Line, or the Westwing 500 kV Switchyard should be directed to, and will follow the procedures established by, that facility's Operating Agent. For interconnections with the Palo Verde-Devers 500 kV Transmission Line or with the Palo Verde-North Gila 500 kV Transmission Line, it will be the respective Operating Agent's responsibility to ensure that the Interconnector's plan of service has been reviewed by the PVTS E&O Committee, the PVTS Administrative Committee, the Palo Verde Nuclear Generating Station (PVNGS) E&O Committee and the PVNGS Administrative Committee. However, in addition to the procedures established by the Operating Agents of the Palo Verde-Devers 500 kV Transmission Line and the Palo Verde-North Gila 500 kV Transmission Line, Interconnectors desiring an interconnection with either of these lines will be required to submit to the detailed safety analysis identified in Step 4 of these procedures.

Responsible Operating Agent

Requests to interconnect with the Palo Verde-Devers 500 kV Transmission Line, the Palo Verde-North Gila 500 kV Transmission Line or the Westwing 500 kV Switchyard should be directed to the Operating Agent identified below. The Operating Agents for the other components of the Palo Verde Transmission System are also identified.

a)	APS	Substation:	Westwing 500kV Switchyard
		Line:	Palo Verde-North Gila 500kV
b)	SRP	Substations:	Palo Verde 500kV Switchyard Kyrene 500kV Switchyard
		Lines:	Palo Verde-Westwing 500kV #1 and #2 Palo Verde-Kyrene 500kV
c)	SCE	Line:	Palo Verde-Devers 500kV

Transmission Interconnection Request

Step 1: A written request for interconnection to the Palo Verde 500 kV Switchyard, the Palo Verde-Westwing 500 kV #1 or #2 Transmission Lines, the Palo Verde-Kyrene 500 kV Transmission Line or the Kyrene 500 kV Switchyard shall be submitted to the Chairman of the PVTS E&O Committee. The request shall include:

a) Plan of service
b) Time frame
c) List of participants
d) Purpose
e) Technical analysis/data as may be available
f) A non-refundable deposit of $10,000 to demonstrate the Interconnector's good faith intent and to cover administrative costs of the PVTS participants. Upon receipt of the deposit, the Operating Agent will credit to each Palo Verde Transmission System facility participant a portion of the deposit in proportion to their entitlement share.

Step 2: Within 7 days of receipt, the Chair of PVTS E&O Committee will forward the request to PVTS E&O Committee members with a copy to the PVTS Administrative Committee and the PVNGS E&O chair, and inform the Chair of the WATS Task Force.

Step 3: Preliminary Study: Within 30 days of receipt of the request by the Chair of the WATS Task Force, the WATS Task Force shall meet with the Interconnector to establish the study plan for the Preliminary Study. The study plan shall be prepared by the Interconnector, or the Interconnector's contractor, and shall be subject to approval by the WATS Task Force. It will be the Interconnector's responsibility to perform, or arrange for the performance of, all technical analyses associated with the Preliminary Study. The technical studies may be performed by the Interconnector, or by a third party of the Interconnector's choice with which the Interconnector contracts.

The goals of the Preliminary Study are to develop a preferred transmission plan (interconnection and system reinforcements) and a preliminary cost estimate sufficient for obtaining any necessary environmental permits. The scope of the technical studies required to assess the technical impact of an interconnection on the Palo Verde Transmission System Facilities will be subject to the WATS Task Force's determination. Technical analysis requirements may include determination of power flow and stability impacts, impacts on breaker fault duties, exposure to subsynchronous resonance, and impacts on existing path ratings. System benefits associated with the interconnection may also be identified. During the Preliminary Study phase, the Operating Agent shall develop a recommendation for the termination location within the PVTS switchyard (if applicable), the switchyard configuration (if applicable) and the necessary interconnection facilities to be installed. NOTE: Any feasibility studies that the Interconnector wishes to perform, or contract with a third party to perform, prior to the Preliminary Study will not be subject to review and approval by the WATS Task Force.

During the course of the Preliminary Study, the WATS Task Force shall meet with the Interconnector as necessary as determined by the Chair of the WATS Task Force in consultation with the Interconnector. The Chair of the WATS Task Force and the Interconnector shall report on the status of studies at each regularly scheduled meeting of the PVTS E&O Committee and at each regularly scheduled meeting of the PVNGS E&O Committee so that any substantive issues may be identified prior to proceeding with the Detailed Planning Study. The Interconnector shall use due diligence to complete the Preliminary Study within 60 days.

At the conclusion of the Interconnector's study, the WATS Task Force shall meet with the Interconnector to review the Interconnector's study results and to discuss the scope of the Detailed Planning Study.

Step 4: Detailed Planning Study: Within 60 days after completion of the Preliminary Study and the WATS Task Force's approval of the study findings, the Interconnector must notify the Chair of the WATS Task Force of its desire to proceed with a Detailed Planning Study and provide to the Chair of the WATS Task Force a draft study plan for the Detailed Planning Study or have its request deemed withdrawn. A request deemed to be withdrawn will receive no further consideration. If the Interconnector chooses to reinitiate its request, such request will be considered a new request for interconnection and will be evaluated based on the date that the Chair of the Palo Verde Transmission System E&O or the Operating Agent of the respective Palo Verde Transmission System Facility receives such request.

The primary goal of the Detailed Planning Study is to complete the study work necessary to successfully conclude the WSCC reliability review process. Within 7 days of receipt of the Interconnector's notice of its intent to proceed with the Detailed Planning Study, the Chair of the WATS Task Force shall notify WSCC of the intent to form a WSCC Project Review Group, distribute the draft study plan and notify the Chair of the PVTS E&O Committee of the Interconnector's desire to proceed with the Detailed Planning Study. Within 30 days, the Chair of the WATS Task Force shall host the first meeting of the WSCC Project Review Group. The technical studies required to assess the technical impact of the interconnection on the interconnected transmission system will be subject to the WSCC review group's determination. Technical analysis requirements may include determination of power flow and stability impacts, impacts on breaker fault duties, exposure to subsynchronous resonance, impact on line losses, voltage/VAR impact/post transient analysis/mitigation, compliance with all WSCC, NERC, WATS and Palo Verde reliability and planning criteria and impacts on existing path ratings.

During the course of the Detailed Planning Study, the WSCC Project Review Group shall meet with the Interconnector as necessary. The Chair of the WATS Task Force and the Interconnector shall report on the status of studies at each regularly scheduled meeting of the PVTS E&O Committee and at each regularly scheduled meeting of the PVNGS E&O Committee so that any substantive issues may be identified prior to the conclusion of the Detailed Planning Study. The Interconnector shall use due diligence to complete the Detailed Planning Study within 180 days.

If the Interconnector's plan of service includes an interconnection with the Palo Verde 500 kV Switchyard or one of the transmission lines connected thereto, then prior to the Interconnector's plan of service being finalized, the Interconnector must submit its plan of service to the staff of the Palo Verde Nuclear Generating Station for a detailed safety analysis. The cost of this evaluation will be the responsibility of the Interconnector. The scope of the analysis and its associated cost will be set forth in an "agreement for evaluation services" to be entered into by the Interconnector and the Palo Verde Nuclear Generating Station. The design requirements which form the basis of the safety analysis are summarized in Attachment B to these procedures, "Palo Verde Nuclear Generating Station Switchyard Interconnection Regulatory Design Requirements."

Detailed Estimate: During the Detailed Planning Study phase, the Operating Agent will develop the construction cost estimate of the interconnection facilities and any necessary system reinforcements.

Interconnection Agreement Negotiations: Upon initiation of the Detailed Planning Study phase, the PVTS E&O Committee shall activate the L&N Committee to begin the process of negotiating the Interconnection Agreement.

Detailed Design, Material Procurement and Construction: Upon initiation of the Detailed Planning Study phase, or at anytime following the initiation of the Detailed Planning Study phase, the Interconnector may initiate negotiations with the Operating Agent for the agreement which will provide for detailed design, material procurement and construction of the interconnection (the Construction Agreement). All interconnections to the Palo Verde 500 kV Switchyard, the Palo Verde-Westwing 500 kV #1 or #2 Transmission Lines, the Palo Verde-Kyrene 500 kV Transmission Line or the Kyrene 500 kV Switchyard shall comply with the design standards for the PVTS. All costs that result from changes to the interconnection plan of service (including withdrawal of the interconnection request) that occur after the execution of the Construction Agreement will be the responsibility of the Interconnector.

Step 5: Upon completion of the Detailed Planning Study, the Interconnector shall present their request and supporting technical analysis from the WATS study process and the WSCC Project Review Group study process at the next regularly scheduled meeting of the PVTS E&O Committee and at the next regularly scheduled meeting of the PVNGS E&O Committee. The WATS Task Force shall recommend approval of the Interconnector's interconnection plan or modifications to the Interconnector's plan if study results so indicate. The Operating Agent shall recommend the interconnection location within the switchyard (if applicable) and equipment to be installed. The PVTS E&O Committee will decide if the interconnection is technically acceptable. If acceptable, a formal written resolution shall be prepared and approved. If the PVTS E&O Committee raises technical concerns that have not been addressed, then the Interconnector shall perform the additional work necessary and re-present their technical analysis.

Step 6: Within 7 days of the PVTS E&O Committee's approval of the Interconnector's studies, the PVTS E&O Committee Chair shall inform the PVTS Administrative Committee and the PVNGS E&O Committee of its determination.

Step 7: If the PVNGS E&O concludes that that the plan of service meets all plant, NRC and other necessary regulatory requirements, the PVNGS E&O Committee shall submit its recommendation to the PVNGS Administrative Committee.

Step 8: The PVNGS Administrative Committee acts on the recommendation from the PVNGS E&O Committee and notifies the PVTS E&O Committee of its approval.

Step 9: If the PVNGS Administrative Committee approves the Interconnection, the PVTS E&O Committee will forward the combined recommendation to the PVTS Administrative Committee. The PVTS Administrative Committee's approval shall satisfy the technical approval requirements.

NOTE: Any changes in the project description may require a re-verification by the PVTS and PVNGS E&O Committees that technical acceptability is still valid. This may require a new technical analysis (i.e. repeat Step 3 or 4).

Generation Interconnection Request

If the Interconnector is a Generation Developer, the procedures for making and evaluating a request for interconnection shall be the same as those set forth for a transmission interconnection request, with the following exceptions:

1. The in-service date for the generation project must be no more than seven years after the date of the interconnection request, unless the Generation Developer demonstrates that engineering, permitting, and construction will take more than seven years. If the generation project consists of multiple units, only those units with a planned in-service date within the seven years will be evaluated for the interconnection request.

2. A Generation Developer's identity and project details, except for the size of the generation project and the planned in-service date, will not be shared with the PVNGS committees and associated personnel until the Generation Developer is prepared to share such information. However, in no event shall the interconnection request evaluation proceed beyond the Preliminary Study phase until the Generation Developer has publicly disclosed its plans.

ATTACHMENT A

Interconnection Request Flow Chart

Palo Verde Interconnection Process Flow

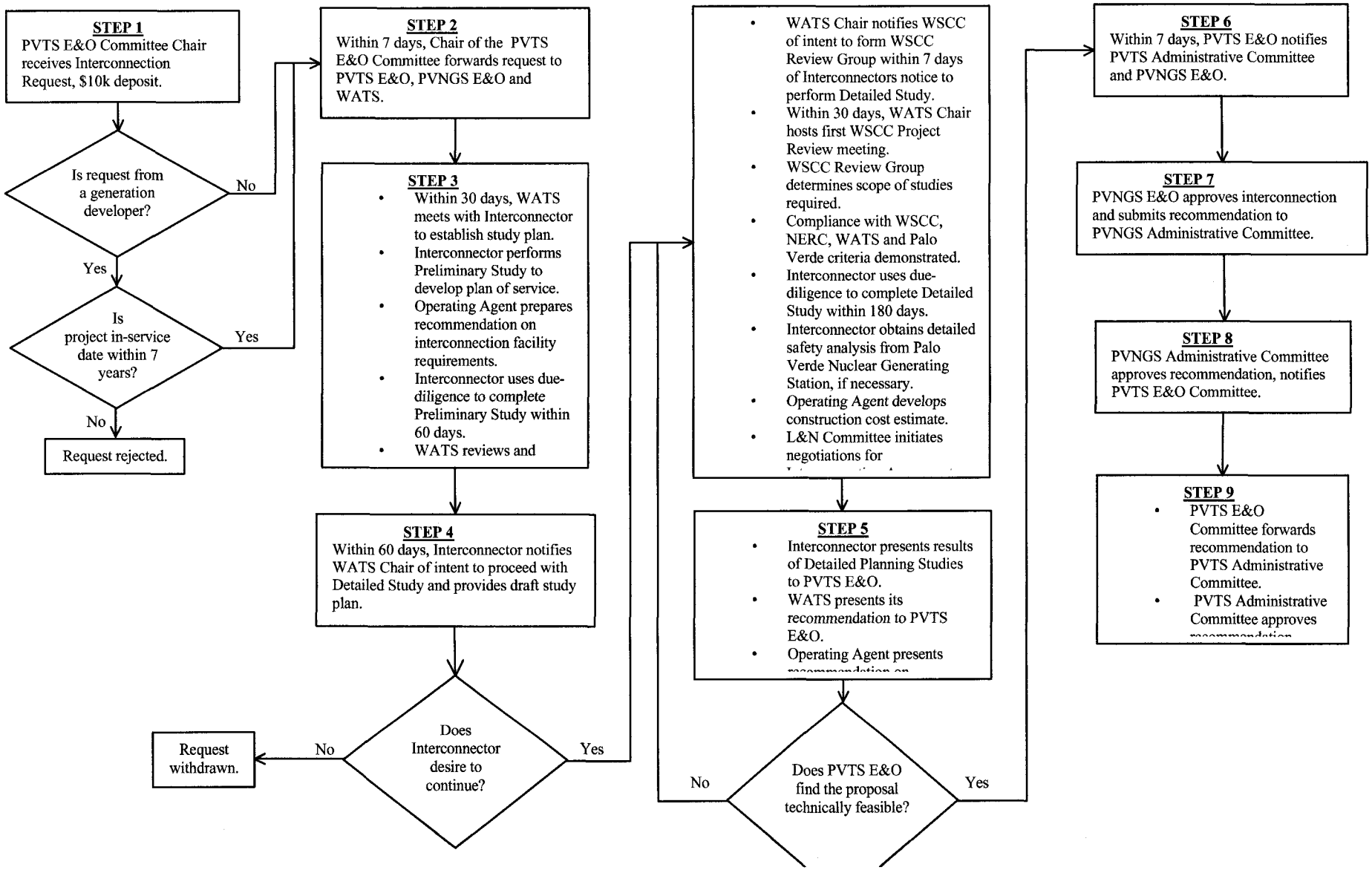

ATTACHMENT B

Palo Verde Nuclear Generating Station
Switchyard Interconnection
Regulatory Design Requirements

APS
Commitment, Innovation, Energy

Palo Verde Nuclear
Generating Station

James M. Levine
Senior Vice President
Nuclear

TEL (602)393-5300
FAX (602)393-6077

Mail Station 7602
P.O. Box 52034
Phoenix, AZ 85072-2034

001-00874-JML
June 23, 1999

Mr. David Areghini
Chairman, Palo Verde Transmission System Administrative Committee
Salt River Project
PO Box 52052
Phoenix, Arizona 85072-2025

SUBJECT Palo Verde Nuclear Generating Station Switchyard Interconnection Regulatory Design Requirements

Dear David,

Palo Verde is aware that several entities have requested permission to interconnect to the Palo Verde switchyard. The switchyard and transmission system up to the first substations are included in Palo Verde's design description approved by the Nuclear Regulatory Commission (NRC) in accordance with Title 10 of the Code of Federal Regulations. Each modification to the switchyard and each new interconnection require a detailed safety analysis to be completed by the Palo Verde staff and may require NRC approval if nuclear safety is impacted.

To help assist the Palo Verde Transmission System Administrative Committee and entities desiring to interconnect to the Palo Verde Switchyard in completing their design and evaluation of potential interconnections, the attached document has been prepared to summarize the design requirements. The referenced documents contain further amplification of the requirements. The attached document can be distributed to interested parties for information.

A meeting can be set up with any entity requesting interconnection to discuss the interconnection concept and what evaluation will be required (depending on the scope of the project). Palo Verde will then put together a schedule and cost estimate for the evaluation along with an "agreement for evaluation services". This agreement will be approved by the party requesting the services and Palo Verde, if acceptable. Once approved, Palo Verde will perform the specified evaluation and obtain NRC review, if required. The cost of both the Palo Verde and NRC reviews should be the responsibility of the party requesting services. These reviews will also include impact of the construction activities to the switchyard and associated lines.

When the Transmission System Administrative Committee has decided to explore or evaluate an interconnection and desires or requires an evaluation by our staff, please contact Mr. Dave Fan of our Electrical Engineering Department at (623)393-6872. If there are any questions regarding this proposed interface with our staff, please contact me.

Sincerely,

(Original signed by James M. Levine)

James M. Levine

JML/WEI/SLK
Attachment

c.c.	G. R. Overbeck	(Sta. 7602)
	J. H. Hesser	(Sta. 7669)
	A. K. Krainik	(Sta. 7636)
	J. D. Underhill	(SRP)
	G. R. Frere	(SRP)

PALO VERDE
NUCLEAR GENERATING STATION

UNITS 1, 2, & 3

REGULATORY DESIGN REQUIREMENTS FOR PALO VERDE SWITCHYARD INTERCONNECTIONS

REVISION 0

OVERVIEW

The preferred source of electrical power for PVNGS safety-related electrical loads and some non-safety related loads is the ***offsite power supply*** which includes the 500 kV grid, transmission lines, transformer, switchyard components and associated control systems, switchyard battery systems, and disconnect switches. The offsite power supply is sometimes referred to as the ***preferred power supply*** in the regulatory documents. Changes to the offsite power source may impact the Licensing and/or Design Basis for PVNGS (i.e. potentially impacting the licensed configuration of the station), and may therefore require prior NRC approval. This document provides guidance for assessing whether or not a proposed change is feasible, but does not substitute for the safety analysis that is required to be performed by our staff for all modifications to the offsite power supply. In addition, the operation and construction interfaces (e.g. clearance process, emergency operation support, PVNGS Owner Controlled Area access, etc.) between PVNGS and the energy control centers, and PVNGS and interconnection construction crews, respectively, also must comply with applicable regulatory requirements which will be addressed separately.

The basic requirement for the offsite power supply is that it provides ***sufficient capacity and capability*** to safely shut down the reactor and to mitigate certain specified accident scenarios. When this condition is met, the offsite power supply is considered Operable with respect to the PVNGS Operating License and Technical Specifications. It is a necessary condition of the Operating License that the offsite power supply be Operable at all times. If the offsite power system is declared Inoperable, action must be taken to shut down the online PVNGS unit(s) and, for an off-line unit, to suspend activities as required by the PVNGS Operating License and Technical Specifications. The offsite power system is considered Inoperable if it is degraded to the point that it does not, or might not, have the capability to supply electrical loads needed to shut down the reactor and to mitigate the effects of an accident at PVNGS in the event of a postulated accident. This level of degradation can be caused by an unstable offsite power system, low voltage following tripping of a PVNGS unit, or any other condition which renders the offsite power unavailable to safely shut down the units or to supply emergency electrical loads.

Procedures and programs must ensure that changes to the design, construction and operation of the Palo Verde 525 kV Switchyard and connected transmission lines (out to the first major substations) are evaluated and understood such that potential impacts to PVNGS are recognized and assessed by the PVNGS staff. This also includes impacts that could increase the risk of the trip of one or more of the PVNGS units or the reduction of power in any of the PVNGS units.

SPECIFIC REQUIREMENTS

Note 1: This section identifies the operational requirements for the PVNGS offsite power supply. These requirements are part of the PVNGS design basis and licensing basis. Failure to meet these requirements may render the offsite power supply Inoperable, thus requiring the operating PVNGS unit(s) to shutdown. Failure to meet these requirements must be immediately communicated to PVNGS. Changes in the design of the transmission network that affect the PVNGS design basis and/or licensing basis require prior approval by PVNGS.

Note 2: Specific requirements, procedures, operating bulletins, division orders, and analysis that support or provide the basis for the specific design requirements may be revised periodically subject to prior approval of the affected parties.

1. Five transmission lines into the Palo Verde Switchyard are normally in service. Any increase or decrease in the number of lines into the Palo Verde Switchyard requires prior approval of PVNGS, as a minimum, and may require approval of the Nuclear Regulatory Commission. (Reference 6)

2. Dynamic stability studies (with 7% operating margin) are required and must demonstrate that the following initiating events shall not result in the loss of grid stability or availability (i.e. does not result in loss of a single. transmission element, transmission overload, or in an undervoltage condition) and that the rate of frequency change for these perturbations does not exceed more that 1.5 Hz./sec.:

   a. The sudden loss of a PVNGS Unit (major generator), or

   b. The sudden loss of the largest single load on the grid, or

   c. The most severe fault on any major transmission circuit or on the switchyard bus,

   Studies must be conducted for any addition, reduction, or change to the transmission system to the Palo Verde Switchyard. (Reference 1, 2, 4, 5, and 6)

3. Power flow studies are required and must demonstrate that the system can reliably deliver power to all project participants. (Reference 1, 6)

4. Addition of interconnection must not impact the capability for the grid frequency to be, maintained at 60 Hertz, as compared to capabilities predicted in current studies. (Reference 2)

5. The MVAR supply at the Palo Verde Switchyard must not be negatively affected as compared to levels predicted in current studies. (References 2, 4, 5, 6)

6. Addition of interconnection must not increase the voltage effect (more than is predicted in current studies) on the Palo Verde Switchyard, as a result of a trip of a PVNGS unit. (Reference 2, 4, 5, 6)

7. Independent offsite sources' design and location, must incorporate both electrical and physical separation, to minimize the likelihood of simultaneous failures (taking into account location of right-of-ways, transmission lines and towers, switchyard interconnections, switchyard control systems and power supplies, main generator disconnect, and disconnect control system). (References 1, 2, 4, 5, 6)

8. Transmission lines between the Palo Verde Switchyard and the next major substations (i.e. associated with PVNGS) must not be crossed. (References 1, 2, 6)

9. Transmission lines must meet Grade B requirements specified by the National Electric Safety Code, sixth edition. (References 2, 4, 6)

10. Transmission line conductor and overhead ground wires must be dampened to maintain current study predicted acceptable levels of vibration for existing transmission lines to Palo Verde Switchyard. (References 2, 4, 6)

11. Palo Verde 525 kV Switchyard Breakers must be designed with duplicate and redundant systems (i.e. two trip coils per breaker on separate isolated dc control circuits/power supplies, two protective relay schemes). (References 1, 2, 4, 5, 6)

12. Instrumentation to determine the status of the breakers of the Preferred Power System at all times are required, located in the PVNGS Units 1, 2, & 3 Control Rooms (including the lines to and the associated breakers in the Palo Verde Switchyard). Design and construction of modifications to the PVNGS power block must be performed by PVNGS personnel (References 1, 2, 5, & 6)

13. Controls for the breakers for the Preferred Power System at all times arc required, located in PVNGS Unit I Control Room (including the lines to and the associated breakers in the Palo Verde Switchyard). Design and construction of modifications to the PVNGS power block must be performed by PVNGS personnel (References 1, 2, 5, & 6)

14. Palo Verde 525 kV Switchyard design includes a breaker-and-a-half arrangement for each circuit along with breaker failure backup protection. (References 2, 5. 6)

15. Transmission line protective relays and Palo Verde 525 kV Switchyard components must be able to be tested on routine basis without removing the transmission lines or Plant components from service. (References 1, 3, 4, 5, 6)

16. Potential impact to the availability of grid, which is determined by frequency, duration, and causes of outages of EHV lines (currently defined by a grid outage rate of 2.08 total outages per year per 100 line miles), is to be minimized. (Reference 2, 4, 6)

REFERENCES

1) NUREG 0800, Standard Review Plan Revision 2, Section 8.2. Offsite Power System

2) 10CFR50 Appendix A, General Design Criterion 17 (GDC-17). Electrical Power Systems

3) 10CFR50 Appendix A, General Design Criterion 18 (GDC-18), Inspection and Testing
4) of Electrical Power Systems

5) Regulatory Guide 1.70, Section 8.2, Offsite Power System

6) NUREG 0857, Safety Evaluation Report related to the operation of Palo Verde Nuclear Generating Station, Units 1, 2, & 3, Section 8.2, Offsite Power System

7) PVNGS Updated Final Safety Analysis Report, Section 8.0, Electric Power

Appendix B

Generation and Area Interchange Schedule Assumptions for the Pre and Post Project Base Cases

TABLE 1

PALO VERDE INTERCONNECTION ULTIMATE SYSTEM MAXIMUM TRANSFER TO THE EAST
6500 MW: 3350 MW TO AZ,1000 MW TO MEX,1000 MW TO UT,650 MW TO NM AND 500 MW TO CO

ARIZONA		WATS2002HS01	ULT2002HS01E	DIFFERENCE
INTERCHANGE		2898	-452	-3350
GENERATION CHANGE				-2302
AREA LOAD CHANGE				1048
GENERATORS				
AGFRAG56	13.8	110	30	-80
AGUAFR 3	18.0	84	51	-33
AGUAFR12	13.8	135	35	-100
CHOLLA2	22.0	245	145	-100
CHOLLA3	22.0	260	150	-110
CHOLLA4	22.0	390	150	-240
CORONAD1	22.0	365	100	-265
CORONAD2	22.0	365	100	-265
OCOTGT1	13.8	56	36	-20
OCOTGT2	13.8	56	36	-20
OCOTILLO	13.8	229	170	-59
SAGUARO1	13.8	55	30	-25
SAGUARO1	15.0	110	30	-80
SAGUARO2	13.8	55	30	-25
SAGUARO2	15.0	79	59	-20
SANTNG13	13.8	125	45	-80
SANTNG24	13.8	135	45	-90
WPHX CC1	13.8	85	35	-50
WPHX CC2	13.8	85	35	-50
WPHX CC3	13.8	85	35	-50
WPHX GT1	13.8	56	36	-20
WPHX GT2	13.8	56	36	-20
SPR GEN1	19.0	380	230	-150
SPR GEN2	19.0	380	230	-150
IRVTGE1	13.8	80	40	-40
IRVTGE2	13.8	80	40	-40
IRVTGE3	13.8	104	44	-60
IRVTGE4	18.0	156	96	-60

NEW MEXICO		WATS2002HS01	ULT2002HS01E	DIFFERENCE
INTERCHANGE		250	-400	-650
GENERATION CHANGE				-650
GENERATORS				
PEGS1	17.6	226	106	-120
SJUAN G1	22.0	350	285	-65
SJUAN G2	24.0	340	275	-65
SJUAN G3	22.0	536	336	-200
SJUAN G4	22.0	536	336	-200

TABLE 1

PALO VERDE INTERCONNECTION ULTIMATE SYSTEM MAXIMUM TRANSFER TO THE EAST
6500 MW: 3350 MW TO AZ,1000 MW TO MEX,1000 MW TO UT,650 MW TO NM AND 500 MW TO CO

UTAH		WATS2002HS01	ULT2002HS01E	DIFFERENCE
INTERCHANGE		85	-915	-1000
GENERATION CHANGE				-1000
GENERATORS				
BONANZA	24.0	423	323	-100
DAVEJON4	22.0	350	250	-100
EHUNTR 1	24.0	435	335	-100
EHUNTR 2	24.0	435	335	-100
EHUNTR 3	22.0	440	340	-100
HUNTN G1	22.0	425	325	-100
HUNTN G2	22.0	425	325	-100
NAUGT G2	20.0	214	114	-100
NAUGT G3	24.0	330	230	-100
WYODAK 1	22.0	360	260	-100

COLORADO		WATS2002HS01	ULT2002HS01E	DIFFERENCE
INTERCHANGE		-1012	-1512	-500
GENERATION CHANGE				-500
GENERATORS				
CHEROKEE	22.0	300	200	-100
COMAN 1	24.0	300	200	-100
COMAN 2	24.0	300	200	-100
PAWNEE	22.0	450	250	-200

MEXICO	WATS2002HS01	ULT2002HS01E	DIFFERENCE
INTERCHANGE	0	-1000	-1000
AREA LOAD CHANGE	0	1000	1000

HARQUAHALA		WATS2002HS01	ULT2002HS01E	DIFFERENCE
INTERCHANGE		0	1100	1100
GENERATION CHANGE		0	1100	1100
GENERATORS				
HGC GEN1	21.0	0	275	275
HGC GEN2	21.0	0	275	275
HGC GEN3	21.0	0	275	275
HGC GEN4	21.0	0	275	275

TABLE 1

PALO VERDE INTERCONNECTION ULTIMATE SYSTEM MAXIMUM TRANSFER TO THE EAST
6500 MW: 3350 MW TO AZ,1000 MW TO MEX,1000 MW TO UT,650 MW TO NM AND 500 MW TO CO

DUKE ENERGY MANAGEMENT		WATS2002HS01	ULT2002HS01E	DIFFERENCE
INTERCHANGE		0	1100	1100
GENERATION CHANGE		0	1100	1100
GENERATORS				
DEM GEN1	18.0	0	160	160
DEM GEN2	18.0	0	160	160
DEM GEN3	18.0	0	220	220
DEM GEN4	13.8	0	70	70
DEM GEN5	13.8	0	70	70
DEM GEN6	13.8	0	70	70
DEM GEN7	13.8	0	70	70
DEM GEN8	13.8	0	70	70
DEM GEN9	13.8	0	70	70
DEM GN10	13.8	0	70	70
DEM GN11	13.8	0	70	70

SEMPRA		WATS2002HS01	ULT2002HS01E	DIFFERENCE
INTERCHANGE		0	1000	1000
GENERATION CHANGE		0	1000	1000
GENERATORS				
SEM CT1	18.0	0	165	167
SEM CT2	18.0	0	167	167
SEM CT3	18.0	0	167	167
SEM CT4	18.0	0	167	167
SEM ST1	18.0	0	167	167
SEM ST2	18.0	0	167	167

REDHAWK		WATS2002HS01	ULT2002HS01E	DIFFERENCE
INTERCHANGE		0	1650	1650
GENERATION CHANGE		0	1650	1650
GENERATORS				
RED-CT1	13.8	0	132	132
RED-CT2	13.8	0	134	134
RED-CT3	13.8	0	134	134
RED-CT4	13.8	0	134	134
RED-CT5	13.8	0	134	134
RED-CT6	13.8	0	134	134
RED-CT7	13.8	0	134	134
RED-CT8	13.8	0	134	134
RED-ST1	16.0	0	145	145
RED-ST2	16.0	0	145	145
RED-ST3	16.0	0	145	145
RED-ST4	16.0	0	145	145

TABLE 1

PALO VERDE INTERCONNECTION ULTIMATE SYSTEM MAXIMUM TRANSFER TO THE EAST
6500 MW: 3350 MW TO AZ,1000 MW TO MEX,1000 MW TO UT,650 MW TO NM AND 500 MW TO CO

PANDA		WATS2002HS01	ULT2002HS01E	DIFFERENCE
INTERCHANGE		0	1000	1000
GENERATION CHANGE		0	1000	1000
GENERATORS				
PAN-CT1	18.0	0	72	72
PAN-CT2	18.0	0	64	64
PAN-ST1	18.0	0	120	120
PAN-CT3	18.0	0	64	64
PAN-CT4	18.0	0	64	64
PAN-ST2	18.0	0	120	120
PAN-CT5	18.0	0	64	64
PAN-CT6	18.0	0	64	64
PAN-ST3	18.0	0	120	120
PAN-CT7	18.0	0	64	64
PAN-CT8	18.0	0	64	64
PAN-ST4	18.0	0	120	120

POWER DEVELOPMENT ENERGY		WATS2002HS01	ULT2002HS01E	DIFFERENCE
INTERCHANGE		0	650	650
GENERATION CHANGE		0	650	650
GENERATORS				
PDE-CT1	18.0	0	150	150
PDE-CT2	18.0	0	150	150
PDE-CT3	18.0	0	150	150
PDE-ST1	18.0	0	200	200

TABLE 2

PALO VERDE INTERCONNECTION ULTIMATE SYSTEM MAXIMUM TRANSFER TO THE WEST
3835 MW: 850 MW TO LADWP,1560 MW TO SCE, 425 MW TO SDGE AND 1000 MW TO MEXI

LADWP		WATS2002HS01	ULT2002HS01W	DIFFERENCE
INTERCHANGE		-1362	-1672	-309
GENERATION CHANGE				-300
HOOVER REPLACEMENT				-550
TOTAL EOR DISTRIBUTION				-859
% OVER 2835 MW EOR SCHEDULE				~30%
GENERATORS				
CASTAI1G	18.0	103	137	30
CASTAI2G	18.0	200	90	-110
CASTAI3G	18.0	200	90	-110
CASTAI4G	18.0	200	90	-110

SCE		WATS2002HS01	ULT2002HS01W	DIFFERENCE
INTERCHANGE		-6166	-7180	-1014
GENERATION CHANGE				-1000
HOOVER REPLACEMENT				-550
TOTAL EOR DISTRIBUTION				-1564
% OVER 2835 MW EOR SCHEDULE				~55%
GENERATORS				
ALAMT1 G	18.0	170	100	-70
ALAMT2 G	18.0	170	100	-70
ALAMT3 G	18.0	300	100	-200
ALAMT4 G	18.0	300	100	-200
ALAMT5 G	20.0	252	355	103
ALAMT6 G	20.0	480	200	-280
MOHAV1CC	22.0	785	350	-435
MOHAV2CC	22.0	785	350	-435
ORMOND1G	26.0	550	750	150
ORMOND2G	26.0	550	750	150
REDON7 G	20.0	300	435	135
REDON8 G	20.0	300	435	135

SDG&E		WATS2002HS01	ULT2002HS01W	DIFFERENCE
INTERCHANGE		-2300	-2724	-424
GENERATION CHANGE				-410
% OVER 2835 MW EOR SCHEDULE				~15%
GENERATORS				
ENCINA 4	22.0	300	225	-75
ENCINA 5	24.0	330	225	-105
SOUTHBY1	15.0	145	100	-45
SOUTHBY2	15.0	150	100	-50
SOUTHBY3	20.0	173	120	-53
SOUTHBY4	20.0	217	135	-82

TABLE 2

PALO VERDE INTERCONNECTION ULTIMATE SYSTEM MAXIMUM TRANSFER TO THE WEST
3835 MW: 850 MW TO LADWP,1560 MW TO SCE, 425 MW TO SDGE AND 1000 MW TO MEXI

WAPA L.C.		WATS2002HS01	ULT2002HS01W	DIFFERENCE
INTERCHANGE		2233	1133	-1100
GENERATION CHANGE				-1100
HOOVER REPLACEMENT (LADWP)				550
HOOVER REPLACEMENT (SCE)				550
GENERATORS				
HOOVERA3	16.5	91	36	-55
HOOVERA4	16.5	115	36	-79
HOOVERA5	16.5	115	36	-79
HOOVERA6	16.5	115	36	-79
HOOVERA7	16.5	115	36	-79
HOVRA1A2	16.5	235	104	-131
HOVRA8A9	16.5	115	36	-79
HOVRN1N2	16.5	235	104	-131
HOVRN3N4	16.5	235	104	-131
HOVRN5N6	16.5	235	104	-131
HOVRN7N8	16.5	235	104	-131

MEXICO	WATS2002HS01	ULT2002HS01W	DIFFERENCE
INTERCHANGE	0	-1000	-1000
AREAD LOAD CHANGE	0	1000	1000

HARQUAHALA		WATS2002HS01	ULT2002HS01W	DIFFERENCE
INTERCHANGE		0	675	675
GENERATION CHANGE		0	675	675
GENERATORS				
HGC GEN1	21.0	0	165	165
HGC GEN2	21.0	0	170	170
HGC GEN3	21.0	0	170	170
HGC GEN4	21.0	0	170	170

DUKE ENERGY MANAGEMENT		WATS2002HS01	ULT2002HS01W	DIFFERENCE
INTERCHANGE		0	675	675
GENERATION CHANGE		0	675	675
GENERATORS				
DEM GEN1	18.0	0	115	115
DEM GEN2	18.0	0	120	120
DEM GEN3	18.0	0	120	120
DEM GEN4	13.8	0	30	30
DEM GEN5	13.8	0	30	30
DEM GEN6	13.8	0	30	30
DEM GEN7	13.8	0	30	30
DEM GEN8	13.8	0	30	30
DEM GEN9	13.8	0	30	30
DEM GN10	13.8	0	30	30
DEM GN11	13.8	0	30	30

TABLE 2

PALO VERDE INTERCONNECTION ULTIMATE SYSTEM MAXIMUM TRANSFER TO THE WEST
3835 MW: 850 MW TO LADWP,1560 MW TO SCE, 425 MW TO SDGE AND 1000 MW TO MEXI

SEMPRA		WATS2002HS01	ULT2002HS01W	DIFFERENCE
INTERCHANGE		0	675	675
GENERATION CHANGE		0	675	675
GENERATORS				
SEM CT1	18.0	0	110	110
SEM CT2	18.0	0	113	113
SEM CT3	18.0	0	113	113
SEM CT4	18.0	0	113	113
SEM ST1	18.0	0	113	113
SEM ST2	18.0	0	113	113

REDHAWK		WATS2002HS01	ULT2002HS01W	DIFFERENCE
INTERCHANGE		0	735	735
GENERATION CHANGE		0	735	735
GENERATORS				
RED-CT1	13.8	0	43	43
RED-CT2	13.8	0	63	63
RED-CT3	13.8	0	63	63
RED-CT4	13.8	0	63	63
RED-CT5	13.8	0	63	63
RED-CT6	13.8	0	63	63
RED-CT7	13.8	0	63	63
RED-CT8	13.8	0	63	63
RED-ST1	16.0	0	63	63
RED-ST2	16.0	0	63	63
RED-ST3	16.0	0	63	63
RED-ST4	16.0	0	63	63

PANDA		WATS2002HS01	ULT2002HS01W	DIFFERENCE
INTERCHANGE		0	625	625
GENERATION CHANGE		0	625	625
GENERATORS				
PAN-CT1	18.0	0	53	53
PAN-CT2	18.0	0	52	52
PAN-ST1	18.0	0	52	52
PAN-CT3	18.0	0	52	52
PAN-CT4	18.0	0	52	52
PAN-ST2	18.0	0	52	52
PAN-CT5	18.0	0	52	52
PAN-CT6	18.0	0	52	52
PAN-ST3	18.0	0	52	52
PAN-CT7	18.0	0	52	52
PAN-CT8	18.0	0	52	52
PAN-ST4	18.0	0	52	52

TABLE 2

PALO VERDE INTERCONNECTION ULTIMATE SYSTEM MAXIMUM TRANSFER TO THE WEST
3835 MW: 850 MW TO LADWP,1560 MW TO SCE, 425 MW TO SDGE AND 1000 MW TO MEXI

POWER DEVELOPMENT ENERGY		WATS2002HS01	ULT2002HS01W	DIFFERENCE
INTERCHANGE		0	450	450
GENERATION CHANGE		0	450	450
GENERATORS				
PDE-CT1	18.0	0	114	114
PDE-CT2	18.0	0	112	112
PDE-CT3	18.0	0	112	112
PDE-ST1	18.0	0	112	112

TABLE 3

PALO VERDE INTERCONNECTION ULTIMATE SYSTEM MAXIMUM TRANSFER TO ALL AREAS
6750 MW: 3100 MW(AZ),1150 MW(CA),1000 MW(MX),600 MW(UT),400 MW(NM) 500 MW(CO)

ARIZONA		WATS2002HS01	ULT2002HS01C2	DIFFERENCE
INTERCHANGE		2898	-202	-3100
GENERATION CHANGE				-1876
AREA LOAD CHANGE				1224
GENERATORS				
AGFRAG56	13.8	110	80	-30
AGUAFR 3	18.0	84	122	38
CHOLLA2	22.0	245	145	-100
CHOLLA3	22.0	260	150	-110
CHOLLA4	22.0	390	150	-240
CORONAD1	22.0	365	160	-205
CORONAD2	22.0	365	160	-205
HRSMS4	13.8	98	58	-40
OCOTGT1	13.8	56	26	-30
OCOTGT2	13.8	56	26	-30
OCOTILLO	13.8	229	210	-19
SAGUARO1	13.8	55	30	-25
SAGUARO1	15.0	110	30	-80
SAGUARO2	13.8	55	30	-25
SAGUARO2	15.0	79	59	-20
SANTNG13	13.8	125	30	-95
SANTNG24	13.8	135	40	-95
WPHX CC1	13.8	85	50	-35
WPHX CC2	13.8	85	50	-35
WPHX CC3	13.8	85	50	-35
WPHX GT1	13.8	56	46	-10
WPHX GT2	13.8	56	46	-10
SPR GEN1	19.0	380	260	-120
SPR GEN2	19.0	380	260	-120
IRVTGE1	13.8	80	40	-40
IRVTGE2	13.8	80	40	-40
IRVTGE3	13.8	104	44	-60
IRVTGE4	18.0	156	96	-60

NEW MEXICO		WATS2002HS01	ULT2002HS01C2	DIFFERENCE
INTERCHANGE		250	-150	-400
GENERATION CHANGE				-400
GENERATORS				
PEGS1	17.6	226	106	-120
SJUAN G1	22.0	350	310	-40
SJUAN G2	24.0	340	300	-40
SJUAN G3	22.0	536	436	-100
SJUAN G4	22.0	536	436	-100

TABLE 3

PALO VERDE INTERCONNECTION ULTIMATE SYSTEM MAXIMUM TRANSFER TO ALL AREAS
6750 MW: 3100 MW(AZ),1150 MW(CA),1000 MW(MX),600 MW(UT),400 MW(NM) 500 MW(CO)

UTAH		WATS2002HS01	ULT2002HS01C2	DIFFERENCE
INTERCHANGE		85	-515	-600
GENERATION CHANGE				-600
GENERATORS				
BONANZA	24.0	423	323	-100
DAVEJON4	22.0	350	250	-100
EHUNTR 1	24.0	435	370	-65
EHUNTR 2	24.0	435	370	-65
EHUNTR 3	22.0	440	370	-70
NAUGT G2	20.0	214	114	-100
NAUGT G3	24.0	330	230	-100

COLORADO		WATS2002HS01	ULT2002HS01C2	DIFFERENCE
INTERCHANGE		-1012	-1512	-500
GENERATION CHANGE				-500
GENERATORS				
CHEROKEE	22.0	300	200	-100
COMAN 1	24.0	300	200	-100
COMAN 2	24.0	300	200	-100
PAWNEE	22.0	450	250	-200

LADWP		WATS2002HS01	ULT2002HS01C2	DIFFERENCE
INTERCHANGE		-1362	-1207	155
GENERATION CHANGE				155
HOOVER REPLACEMENT				-500
TOTAL EOR DISTRIBUTION				-345
% OVER 1150 MW EOR SCHEDULE				~30%
GENERATORS				
CASTAI1G	18.0	103	43	-60
CASTAI2G	18.0	200	175	-25
CASTAI3G	18.0	200	175	-25
CASTAI4G	18.0	200	175	-25
CASTAI5G	18.0	80	175	95
CASTAI6G	18.0	80	175	95
HAYNES1G	18.0	175	200	25
HAYNES2G	18.0	175	200	25
HAYNES3G	18.0	175	200	25
SCATT3G	24.0	400	425	25

TABLE 3

PALO VERDE INTERCONNECTION ULTIMATE SYSTEM MAXIMUM TRANSFER TO ALL AREAS
6750 MW: 3100 MW(AZ),1150 MW(CA),1000 MW(MX),600 MW(UT),400 MW(NM) 500 MW(CO)

SCE		WATS2002HS01	ULT2002HS01C2	DIFFERENCE
INTERCHANGE				
GENERATION CHANGE		-6166	-6299	-133
HOOVER REPLACEMENT				-133
TOTAL EOR DISTRIBUTION				-500
% OVER 1150 MW EOR SCHEDULE				-633
				~55%
GENERATORS				
ALAMT5 G	20.0	252	219	-33
ALAMT6 G	20.0	480	400	-80
MOHAV1CC	22.0	785	450	-335
MOHAV2CC	22.0	785	450	-335
ORMOND1G	26.0	550	725	175
ORMOND2G	26.0	550	725	175
REDON7 G	20.0	300	450	150
REDON8 G	20.0	300	450	150

SDG&E		WATS2002HS01	ULT2002HS01C2	DIFFERENCE
INTERCHANGE				
GENERATION CHANGE		-2300	-2473	-173
% OVER 1150 MW EOR SCHEDULE				-173
				~15%
GENERATORS				
ENCINA 2	14.4	104	94	-10
ENCINA 3	14.4	110	100	-10
ENCINA 4	22.0	300	250	-50
ENCINA 5	24.0	330	280	-50
SOUTHBY4	20.0	217	164	-53

WAPA L.C.		WATS2002HS01	ULT2002HS01C2	DIFFERENCE
INTERCHANGE		2233	1233	-1000
GENERATION CHANGE				-1000
HOOVER REPLACEMENT (LADWP)				500
HOOVER REPLACEMENT (SCE)				500
GENERATORS				
HOOVERA3	16.5	91	46	-45
HOOVERA4	16.5	115	53	-62
HOOVERA5	16.5	115	53	-62
HOOVERA6	16.5	115	53	-62

TABLE 3

PALO VERDE INTERCONNECTION ULTIMATE SYSTEM MAXIMUM TRANSFER TO ALL AREAS
6750 MW: 3100 MW(AZ),1150 MW(CA),1000 MW(MX),600 MW(UT),400 MW(NM) 500 MW(CO)

HOOVERA7	16.5	115	53	-62
HOVRA1A2	16.5	235	106	-129
HOVRA8A9	16.5	115	53	-62
HOVRN1N2	16.5	235	106	-129
HOVRN3N4	16.5	235	106	-129
HOVRN5N6	16.5	235	106	-129
HOVRN7N8	16.5	235	106	-129

MEXICO	WATS2002HS01	ULT2002HS01C2	DIFFERENCE
INTERCHANGE	0	-1000	-1000
AREAD LOAD CHANGE	0	1000	1000

HARQUAHALA		WATS2002HS01	ULT2002HS01C2	DIFFERENCE
INTERCHANGE		0	1100	1100
GENERATION CHANGE		0	1100	1100
GENERATORS				
HGC GEN1	21.0	0	275	275
HGC GEN2	21.0	0	275	275
HGC GEN3	21.0	0	275	275
HGC GEN4	21.0	0	275	275

DUKE ENERGY MANAGEMENT		WATS2002HS01	ULT2002HS01C2	DIFFERENCE
INTERCHANGE		0	1100	1100
GENERATION CHANGE		0	1100	1100
GENERATORS				
DEM GEN1	18.0	0	160	160
DEM GEN2	18.0	0	160	160
DEM GEN3	18.0	0	220	220
DEM GEN4	13.8	0	70	70
DEM GEN5	13.8	0	70	70
DEM GEN6	13.8	0	70	70
DEM GEN7	13.8	0	70	70
DEM GEN8	13.8	0	70	70
DEM GEN9	13.8	0	70	70
DEM GN10	13.8	0	70	70
DEM GN11	13.8	0	70	70

TABLE 3

PALO VERDE INTERCONNECTION ULTIMATE SYSTEM MAXIMUM TRANSFER TO ALL AREAS
6750 MW: 3100 MW(AZ),1150 MW(CA),1000 MW(MX),600 MW(UT),400 MW(NM) 500 MW(CO)

SEMPRA		WATS2002HS01	ULT2002HS01C2	DIFFERENCE
INTERCHANGE		0	1000	1000
GENERATION CHANGE		0	1000	1000
GENERATORS				
SEM CT1	18.0	0	165	165
SEM CT2	18.0	0	167	167
SEM CT3	18.0	0	167	167
SEM CT4	18.0	0	167	167
SEM ST1	18.0	0	167	167
SEM ST2	18.0	0	167	167

REDHAWK		WATS2002HS01	ULT2002HS01C2	DIFFERENCE
INTERCHANGE		0	1550	1550
GENERATION CHANGE		0	1550	1550
GENERATORS				
RED-CT1	13.8	0	120	120
RED-CT2	13.8	0	130	130
RED-CT3	13.8	0	130	130
RED-CT4	13.8	0	130	130
RED-CT5	13.8	0	130	130
RED-CT6	13.8	0	130	130
RED-CT7	13.8	0	130	130
RED-CT8	13.8	0	130	130
RED-ST1	16.0	0	130	130
RED-ST2	16.0	0	130	130
RED-ST3	16.0	0	130	130
RED-ST4	16.0	0	130	130

PANDA		WATS2002HS01	ULT2002HS01C2	DIFFERENCE
INTERCHANGE		0	1250	1250
GENERATION CHANGE		0	1250	1250
GENERATORS				
PAN-CT1	18.0	0	80	80
PAN-CT2	18.0	0	80	80
PAN-ST1	18.0	0	145	145
PAN-CT3	18.0	0	85	85
PAN-CT4	18.0	0	85	85
PAN-ST2	18.0	0	145	145
PAN-CT5	18.0	0	85	85
PAN-CT6	18.0	0	85	85
PAN-ST3	18.0	0	145	145
PAN-CT7	18.0	0	85	85

TABLE 3

PALO VERDE INTERCONNECTION ULTIMATE SYSTEM MAXIMUM TRANSFER TO ALL AREAS
6750 MW: 3100 MW(AZ),1150 MW(CA),1000 MW(MX),600 MW(UT),400 MW(NM) 500 MW(CO)

PAN-CT8	18.0	0	85	85
PAN-ST4	18.0	0	145	145

POWER DEVELOPMENT ENERGY	WATS2002HS01	ULT2002HS01C2	DIFFERENCE
INTERCHANGE	0	750	750
GENERATION CHANGE	0	750	750

GENERATORS				
PDE-CT1	18.0	0	150	150
PDE-CT2	18.0	0	175	175
PDE-CT3	18.0	0	175	175
PDE-ST1	18.0	0	250	250

TABLE 4

PALO VERDE INTERCONNECTION ULTIMATE SYSTEM EOR/SCIT LIMITS STUDY
INCREASE OF 1000MW TO THE EOR/SCIT WITH ADDITION OF PV-YUMA WEST 500 KV LINE

LADWP		WATS2002HS02	ULT2002HS02	DIFFERENCE
INTERCHANGE		-2236	-2536	-300
GENERATION CHANGE				-300
% OVER 938 MW CA IMPORT				~32%
GENERATORS				
CASTAI1G	18.0	122	32	-90
CASTAI2G	18.0	80	25	-55
CASTAI3G	18.0	80	25	-55
SCATT1G	18.0	160	150	-10
SCATT2G	18.0	160	150	-10
SCATT3G	24.0	400	320	-80

SCE		WATS2002HS02	ULT2002HS02	DIFFERENCE
INTERCHANGE		-6919	-7430	-511
GENERATION CHANGE				-511
% OVER 938 MW CA IMPORT				~54%
GENERATORS				
ALAMT1 G	18.0	175	100	-75
ALAMT2 G	18.0	175	100	-75
ALAMT3 G	18.0	245	200	-45
ALAMT4 G	18.0	245	200	-45
ALAMT5 G	20.0	281	190	-91
ALAMT6 G	20.0	480	200	-180

SDG&E		WATS2002HS02	ULT2002HS02	DIFFERENCE
INTERCHANGE		-2305	-2432	-127
GENERATION CHANGE				-127
% OVER 938 MW CA IMPORT				~14%
GENERATORS				
SOUTHBY1	15.0	145	125	-20
SOUTHBY2	15.0	150	130	-20
SOUTHBY3	20.0	173	153	-20
SOUTHBY4	20.0	217	155	-67

ARIZONA		WATS2002HS02	ULT2002HS02	DIFFERENCE
INTERCHANGE		4480	2028	-2452
GENERATION CHANGE				-311
AREA LOAD CHANGE				2141
GENERATORS				
AGFRAG56	13.8	50	80	30
AGUAFR 3	18.0	97	79	-18

TABLE 4

PALO VERDE INTERCONNECTION ULTIMATE SYSTEM EOR/SCIT LIMITS STUDY
INCREASE OF 1000MW TO THE EOR/SCIT WITH ADDITION OF PV-YUMA WEST 500 KV LINE

AGUAFR12	13.8	90	120	30
HRSMS123	13.8	30	20	-10
HRSMS4	13.8	98	78	-20
OCOTGT1	13.8	56	36	-20
OCOTGT2	13.8	56	36	-20
OCOTILLO	13.8	229	109	-100
SANTNG13	13.8	124	84	-40
SANTNG24	13.8	124	84	-40
IRVTGE3	13.8	104	78	-26
IRVTGE4	18.0	156	78	-77

MEXICO		WATS2002HS02	ULT2002HS02	DIFFERENCE
INTERCHANGE		0	-1000	-1000
AREAD LOAD CHANGE		0	1000	1000

HARQUAHALA		WATS2002HS02	ULT2002HS02	DIFFERENCE
INTERCHANGE		0	800	800
GENERATION CHANGE		0	800	800
GENERATORS				
HGC GEN1	21.0	0	200	200
HGC GEN2	21.0	0	200	200
HGC GEN3	21.0	0	200	200
HGC GEN4	21.0	0	200	200

DUKE ENERGY MANAGEMENT		WATS2002HS02	ULT2002HS02	DIFFERENCE
INTERCHANGE		0	800	800
GENERATION CHANGE		0	800	800
GENERATORS				
DEM GEN1	18.0	0	100	100
DEM GEN2	18.0	0	100	100
DEM GEN3	18.0	0	200	200
DEM GEN4	13.8	0	50	50
DEM GEN5	13.8	0	50	50
DEM GEN6	13.8	0	50	50
DEM GEN7	13.8	0	50	50
DEM GEN8	13.8	0	50	50
DEM GEN9	13.8	0	50	50
DEM GN10	13.8	0	50	50
DEM GN11	13.8	0	50	50

TABLE 4

PALO VERDE INTERCONNECTION ULTIMATE SYSTEM EOR/SCIT LIMITS STUDY
INCREASE OF 1000MW TO THE EOR/SCIT WITH ADDITION OF PV-YUMA WEST 500 KV LINE

SEMPRA		WATS2002HS02	ULT2002HS02	DIFFERENCE
INTERCHANGE		0	700	700
GENERATION CHANGE		0	700	700
GENERATORS				
SEM CT1	18.0	0	115	115
SEM CT2	18.0	0	117	117
SEM CT3	18.0	0	117	117
SEM CT4	18.0	0	117	117
SEM ST1	18.0	0	117	117
SEM ST2	18.0	0	117	117

REDHAWK		WATS2002HS02	ULT2002HS02	DIFFERENCE
INTERCHANGE		0	700	700
GENERATION CHANGE		0	700	700
GENERATORS				
RED-CT1	13.8	0	63	63
RED-CT2	13.8	0	58	58
RED-CT3	13.8	0	58	58
RED-CT4	13.8	0	58	58
RED-CT5	13.8	0	58	58
RED-CT6	13.8	0	58	58
RED-CT7	13.8	0	58	58
RED-CT8	13.8	0	58	58
RED-ST1	16.0	0	58	58
RED-ST2	16.0	0	58	58
RED-ST3	16.0	0	58	58
RED-ST4	16.0	0	58	58

PANDA		WATS2002HS02	ULT2002HS02	DIFFERENCE
INTERCHANGE		0	700	700
GENERATION CHANGE		0	700	700
GENERATORS				
PAN-CT1	18.0	0	51	51
PAN-CT2	18.0	0	59	59
PAN-ST1	18.0	0	59	59
PAN-CT3	18.0	0	59	59
PAN-CT4	18.0	0	59	59
PAN-ST2	18.0	0	59	59
PAN-CT5	18.0	0	59	59
PAN-CT6	18.0	0	59	59
PAN-ST3	18.0	0	59	59
PAN-CT7	18.0	0	59	59

TABLE 4

PALO VERDE INTERCONNECTION ULTIMATE SYSTEM EOR/SCIT LIMITS STUDY
INCREASE OF 1000MW TO THE EOR/SCIT WITH ADDITION OF PV-YUMA WEST 500 KV LINE

PAN-CT8	18.0	0	59	59
PAN-ST4	18.0	0	59	59

POWER DEVELOPMENT ENERGY		WATS2002HS02	ULT2002HS02	DIFFERENCE
INTERCHANGE		0	600	600
GENERATION CHANGE		0	600	600
GENERATORS				
PDE-CT1	18.0	0	150	150
PDE-CT2	18.0	0	150	150
PDE-CT3	18.0	0	150	150
PDE-ST1	18.0	0	150	150

WAPA L.C.		WATS2002HS02	ULT2002HS002	DIFFERENCE
INTERCHANGE		1323	1413	90
GENERATION CHANGE				90
GENERATORS				
HOOVERA3	16.5	56	91	35
HOOVERA4	16.5	55	75	20
HOOVERA5	16.5	55	75	20
HOOVERA6	16.5	55	75	20
HOOVERA7	16.5	55	75	20
HOVRA1A2	16.5	120	75	-45
HOVRA8A9	16.5	55	75	20

TABLE 5

PALO VERDE INTERCONNECTION ULTIMATE SYSTEM MAXIMUM TRANSFER TO ARIZONA
6400 MW: 3650 MW TO AZ,1000 MW TO MEX,500 MW TO NM,900 MW TO UT,350 MW TO CO

ARIZONA		WATS2002HS01	ULT2002HS03	DIFFERENCE
INTERCHANGE		2898	-752	-3650
GENERATION CHANGE				-2076
AREA LOAD CHANGE				1574
GENERATORS				
AGFRAG56	13.8	110	46	-64
AGUAFR 3	18.0	84	35	-49
AGUAFR12	13.8	135	51	-84
CHOLLA2	22.0	245	145	-100
CHOLLA3	22.0	260	150	-110
CHOLLA4	22.0	390	150	-240
CORONAD1	22.0	365	140	-225
CORONAD2	22.0	365	140	-225
HRSMS4	13.8	98	58	-40
OCOTGT1	13.8	56	26	-30
OCOTGT2	13.8	56	26	-30
OCOTILLO	13.8	229	170	-59
SAGUARO1	13.8	55	30	-25
SAGUARO1	15.0	110	30	-80
SAGUARO2	13.8	55	30	-25
SAGUARO2	15.0	79	59	-20
SANTNG13	13.8	125	80	-45
SANTNG24	13.8	135	90	-45
WPHX CC1	13.8	85	45	-40
WPHX CC2	13.8	85	45	-40
WPHX CC3	13.8	85	45	-40
WPHX GT1	13.8	56	46	-10
WPHX GT2	13.8	56	46	-10
SPR GEN1	19.0	380	260	-120
SPR GEN2	19.0	380	260	-120
IRVTGE1	13.8	80	40	-40
IRVTGE2	13.8	80	40	-40
IRVTGE3	13.8	104	44	-60
IRVTGE4	18.0	156	96	-60

NEW MEXICO		WATS2002HS01	ULT2002HS03	DIFFERENCE
INTERCHANGE		250	-250	-500
GENERATION CHANGE				-500
GENERATORS				
NEWMANG3	13.8	101	41	-60
PEGS1	17.6	226	106	-120
SJUAN G1	22.0	350	285	-65
SJUAN G2	24.0	340	285	-55
SJUAN G3	22.0	536	436	-100
SJUAN G4	22.0	536	436	-100

TABLE 5

PALO VERDE INTERCONNECTION ULTIMATE SYSTEM MAXIMUM TRANSFER TO ARIZONA
6400 MW: 3650 MW TO AZ,1000 MW TO MEX,500 MW TO NM,900 MW TO UT,350 MW TO CO

UTAH		WATS2002HS01	ULT2002HS03	DIFFERENCE
INTERCHANGE		85	-815	-900
GENERATION CHANGE				-900
GENERATORS				
BONANZA	24.0	423	323	-100
DAVEJON4	22.0	350	250	-100
EHUNTR 3	22.0	440	340	-100
HUNTN G1	22.0	425	325	-100
HUNTN G2	22.0	425	325	-100
NAUGT G1	18.0	109	9	-100
NAUGT G2	20.0	214	114	-100
NAUGT G3	24.0	330	230	-100
WYODAK 1	22.0	360	260	-100

COLORADO		WATS2002HS01	ULT2002HS03	DIFFERENCE
INTERCHANGE		-1012	-1362	-350
GENERATION CHANGE				-350
GENERATORS				
CHEROKEE	22.0	300	250	-50
COMAN 1	24.0	300	250	-50
COMAN 2	24.0	300	250	-50
PAWNEE	22.0	450	250	-200

MEXICO	WATS2002HS01	ULT2002HS03	DIFFERENCE
INTERCHANGE	0	-1000	-1000
AREAD LOAD CHANGE	0	1000	1000

HARQUAHALA		WATS2002HS01	ULT2002HS03	DIFFERENCE
INTERCHANGE		0	1000	1000
GENERATION CHANGE		0	1000	1000
GENERATORS				
HGC GEN1	21.0	0	250	250
HGC GEN2	21.0	0	250	250
HGC GEN3	21.0	0	250	250
HGC GEN4	21.0	0	250	250

TABLE 5

PALO VERDE INTERCONNECTION ULTIMATE SYSTEM MAXIMUM TRANSFER TO ARIZONA
6400 MW: 3650 MW TO AZ,1000 MW TO MEX,500 MW TO NM,900 MW TO UT,350 MW TO CO

DUKE ENERGY MANAGEMENT		WATS2002HS01	ULT2002HS03	DIFFERENCE
INTERCHANGE		0	1000	1000
GENERATION CHANGE		0	1000	1000
GENERATORS				
DEM GEN1	18.0	0	120	120
DEM GEN2	18.0	0	120	120
DEM GEN3	18.0	0	200	200
DEM GEN4	13.8	0	70	70
DEM GEN5	13.8	0	70	70
DEM GEN6	13.8	0	70	70
DEM GEN7	13.8	0	70	70
DEM GEN8	13.8	0	70	70
DEM GEN9	13.8	0	70	70
DEM GN10	13.8	0	70	70
DEM GN11	13.8	0	70	70

SEMPRA		WATS2002HS01	ULT2002HS03	DIFFERENCE
INTERCHANGE		0	1000	1000
GENERATION CHANGE		0	1000	1000
GENERATORS				
SEM CT1	18.0	0	165	167
SEM CT2	18.0	0	167	167
SEM CT3	18.0	0	167	167
SEM CT4	18.0	0	167	167
SEM ST1	18.0	0	167	167
SEM ST2	18.0	0	167	167

REDHAWK		WATS2002HS01	ULT2002HS03	DIFFERENCE
INTERCHANGE		0	1750	1750
GENERATION CHANGE		0	1750	1750
GENERATORS				
RED-CT1	13.8	0	155	155
RED-CT2	13.8	0	145	145
RED-CT3	13.8	0	145	145
RED-CT4	13.8	0	145	145
RED-CT5	13.8	0	145	145
RED-CT6	13.8	0	145	145
RED-CT7	13.8	0	145	145
RED-CT8	13.8	0	145	145
RED-ST1	16.0	0	145	145
RED-ST2	16.0	0	145	145
RED-ST3	16.0	0	145	145
RED-ST4	16.0	0	145	145

TABLE 5

PALO VERDE INTERCONNECTION ULTIMATE SYSTEM MAXIMUM TRANSFER TO ARIZONA
6400 MW: 3650 MW TO AZ,1000 MW TO MEX,500 MW TO NM,900 MW TO UT,350 MW TO CO

PANDA		WATS2002HS01	ULT2002HS03	DIFFERENCE
INTERCHANGE		0	1000	1000
GENERATION CHANGE		0	1000	1000
GENERATORS				
PAN-CT1	18.0	0	70	70
PAN-CT2	18.0	0	70	70
PAN-ST1	18.0	0	110	110
PAN-CT3	18.0	0	70	70
PAN-CT4	18.0	0	70	70
PAN-ST2	18.0	0	110	110
PAN-CT5	18.0	0	70	70
PAN-CT6	18.0	0	70	70
PAN-ST3	18.0	0	110	110
PAN-CT7	18.0	0	70	70
PAN-CT8	18.0	0	70	70
PAN-ST4	18.0	0	110	110

POWER DEVELOPMENT ENERGY		WATS2002HS01	ULT2002HS03	DIFFERENCE
INTERCHANGE				
GENERATION CHANGE		0	650	650
		0	650	650
GENERATORS				
PDE-CT1	18.0			
PDE-CT2	18.0	0	175	175
PDE-CT3	18.0	0	150	150
PDE-ST1	18.0	0	150	150
		0	175	175

TABLE 6

PALO VERDE INTERCONNECTION WITH THE ADDITION OF PV-ESTRELLA 500 KV LINE
4850 MW: 3500 MW TO ARIZ,300 MW TO NEW MEXICO AND 1050 MW TO CALIFORNIA

ARIZONA		WATS2002HS01	2002HSXM1&2B	DIFFERENCE
INTERCHANGE		2898	-602	-3500
GENERATION CHANGE				-2300
AREA LOAD CHANGE				1200
GENERATORS				
AGFRAG56	13.8	110	30	-80
AGUAFR 3	18.0	84	82	-2
AGUAFR12	13.8	135	35	-100
CHOLLA2	22.0	245	145	-100
CHOLLA3	22.0	260	150	-110
CHOLLA4	22.0	390	200	-190
CORONAD1	22.0	365	160	-205
CORONAD2	22.0	365	160	-205
HRSMS4	13.8	98	28	-70
MRMFT12	13.8	58	28	-30
OCOTGT1	13.8	56	26	-30
OCOTGT2	13.8	56	26	-30
OCOTILLO	13.8	229	60	-169
SAGUARO1	13.8	55	30	-25
SAGUARO1	15.0	110	30	-80
SAGUARO2	13.8	55	30	-25
SAGUARO2	15.0	79	59	-20
SANTNG13	13.8	125	30	-95
SANTNG24	13.8	135	40	-95
WPHX CC1	13.8	85	25	-60
WPHX CC2	13.8	85	25	-60
WPHX CC3	13.8	85	25	-60
WPHX GT1	13.8	56	26	-30
WPHX GT2	13.8	56	26	-30
SPR GEN1	19.0	380	260	-120
SPR GEN2	19.0	380	260	-120
IRVTGE1	13.8	80	40	-40
IRVTGE2	13.8	80	40	-40
IRVTGE3	13.8	104	44	-60
IRVTGE4	18.0	156	96	-60

NEW MEXICO		WATS2002HS01	2002HSXM1&2B	DIFFERENCE
INTERCHANGE		250	-50	-300
GENERATION CHANGE				-300
GENERATORS				
NEWMANG3	13.8	101	93	-8
PEGS1	17.6	226	206	-20
SJUAN G1	22.0	350	310	-40
SJUAN G2	24.0	340	300	-40
SJUAN G3	22.0	536	440	-96
SJUAN G4	22.0	536	440	-96

TABLE 6

PALO VERDE INTERCONNECTION WITH THE ADDITION OF PV-ESTRELLA 500 KV LINE
4850 MW: 3500 MW TO ARIZ,300 MW TO NEW MEXICO AND 1050 MW TO CALIFORNIA

PG AND E		WATS2002HS01	2002HSXM1&2B	DIFFERENCE
INTERCHANGE		-1866	-2408	-542
GENERATION CHANGE				-542
TOTAL EOR DISTRIBUTION				-542
% OVER 1050 MW EOR SCHEDULE				~52%
GENERATORS				
C.COS 6	18.0	345	245	-100
C.COS 7	18.0	345	245	-100
HELMS 1	18.0	400	300	-100
HELMS 2	18.0	400	300	-100
HYATT	12.5	465	365	-100
MORRO 4	18.0	113	171	58
MOSSLND7	22.0	750	650	-100

LADWP		WATS2002HS01	2002HSXM1&2B	DIFFERENCE
INTERCHANGE		-1362	-1437	-75
GENERATION CHANGE				-75
HOOVER REPLACEMENT				-500
TOTAL EOR DISTRIBUTION				-575
% OVER 1050 MW EOR SCHEDULE				~55%
GENERATORS				
CASTAI1G	18.0	103	98	-5
CASTAI2G	18.0	200	100	-100
CASTAI3G	18.0	200	100	-100
CASTAI4G	18.0	200	100	-100
CASTAI5G	18.0	80	100	20
CASTAI6G	18.0	80	100	20
HAYNES1G	18.0	175	220	45
HAYNES2G	18.0	175	220	45
HAYNES3G	18.0	175	220	45
HAYNES4G	18.0	200	220	20
HAYNES6G	18.0	320	330	10
SCATT3G	24.0	400	425	25

SCE		WATS2002HS01	2002HSXM1&2B	DIFFERENCE
INTERCHANGE				
GENERATION CHANGE		-6166	-5591	575
HOOVER REPLACEMENT				-500
TOTAL EOR DISTRIBUTION				75
% OVER 1050 MW EOR SCHEDULE				~ -7%
GENERATORS				
ALAMT1 G	18.0	170	175	5
ALAMT2 G	18.0	170	175	5

TABLE 6

PALO VERDE INTERCONNECTION WITH THE ADDITION OF PV-ESTRELLA 500 KV LINE
4850 MW: 3500 MW TO ARIZ,300 MW TO NEW MEXICO AND 1050 MW TO CALIFORNIA

ALAMT3 G	18.0	300	320	20
ALAMT4 G	18.0	300	320	20
ALAMT5 G	20.0	252	412	160
BIGCREEK	13.8	700	719	19
EASTWOOD	13.8	180	200	20
ELSEG1 G	18.0	158	175	17
ELSEG2 G	18.0	158	175	17
ELSEG3 G	18.0	302	335	33
ETIWA1 G	15.5	119	140	21
ETIWA2 G	15.5	119	140	21
ETIWA3 G	18.0	300	320	20
HUNT1 G	13.8	194	215	21
HUNT2 G	13.8	194	215	21
MOHAV1CC	22.0	785	450	-335
MOHAV2CC	22.0	785	450	-335
ORMOND1G	26.0	550	750	200
ORMOND2G	26.0	550	750	200
REDON5 G	18.0	158	175	17
REDON6 G	18.0	158	175	17
REDON7 G	20.0	300	480	180
REDON8 G	20.0	300	480	180

SDG&E		WATS2002HS01	2002HSXM1&2B	DIFFERENCE
INTERCHANGE		-2300	-2310	-10
GENERATION CHANGE				-10
% OVER 1050 MW EOR SCHEDULE				~0%
GENERATORS				
SOUTHBY4	20.0	217	207	-10

WAPA L.C.		WATS2002HS01	2002HSXM1&2B	DIFFERENCE
INTERCHANGE		2233	1233	-1000
GENERATION CHANGE				-1000
HOOVER REPLACEMENT (LADWP)				500
HOOVER REPLACEMENT (SCE)				500
GENERATORS				
HOOVERA3	16.5	91	46	-45
HOOVERA4	16.5	115	53	-62
HOOVERA5	16.5	115	53	-62
HOOVERA6	16.5	115	53	-62
HOOVERA7	16.5	115	53	-62
HOVRA1A2	16.5	235	106	-129
HOVRA8A9	16.5	115	53	-62
HOVRN1N2	16.5	235	106	-129
HOVRN3N4	16.5	235	106	-129
HOVRN5N6	16.5	235	106	-129
HOVRN7N8	16.5	235	106	-129

TABLE 6

PALO VERDE INTERCONNECTION WITH THE ADDITION OF PV-ESTRELLA 500 KV LINE
4850 MW: 3500 MW TO ARIZ,300 MW TO NEW MEXICO AND 1050 MW TO CALIFORNIA

HARQUAHALA		WATS2002HS01	2002HSXM1&2B	DIFFERENCE
INTERCHANGE		0	600	600
GENERATION CHANGE		0	600	600
GENERATORS				
HGC GEN1	21.0	0	200	200
HGC GEN2	21.0	0	200	200
HGC GEN3	21.0	0	200	200

DUKE ENERGY MANAGEMENT		WATS2002HS01	2002HSXM1&2B	DIFFERENCE
INTERCHANGE		0	600	600
GENERATION CHANGE		0	600	600
GENERATORS				
DEM GEN1	18.0	0	150	150
DEM GEN2	18.0	0	150	150
DEM GEN3	18.0	0	225	225
DEM GEN4	13.8	0	38	38
DEM GEN5	13.8	0	37	37

SEMPRA		WATS2002HS01	2002HSXM1&2B	DIFFERENCE
INTERCHANGE		0	600	600
GENERATION CHANGE		0	600	600
GENERATORS				
SEM CT1	18.0	0	120	120
SEM CT2	18.0	0	120	120
SEM CT3	18.0	0	120	120
SEM CT4	18.0	0	120	120
SEM ST1	18.0	0	120	120

REDHAWK		WATS2002HS01	2002HSXM1&2B	DIFFERENCE
INTERCHANGE		0	1250	1250
GENERATION CHANGE		0	1250	1250
GENERATORS				
RED-CT1	13.8	0	158	158
RED-CT2	13.8	0	156	156
RED-CT3	13.8	0	156	156
RED-CT4	13.8	0	156	156
RED-CT5	13.8	0	156	156
RED-CT6	13.8	0	156	156
RED-CT7	13.8	0	156	156
RED-CT8	13.8	0	156	156

TABLE 6

PALO VERDE INTERCONNECTION WITH THE ADDITION OF PV-ESTRELLA 500 KV LINE
4850 MW: 3500 MW TO ARIZ,300 MW TO NEW MEXICO AND 1050 MW TO CALIFORNIA

PANDA		WATS2002HS01	2002HSXM1&2B	DIFFERENCE
INTERCHANGE		0	1150	1150
GENERATION CHANGE		0	1150	1150
GENERATORS				
PAN-CT1	18.0	0	110	110
PAN-CT2	18.0	0	111	111
PAN-ST1	18.0	0	195	195
PAN-CT3	18.0	0	111	111
PAN-CT4	18.0	0	111	111
PAN-ST2	18.0	0	195	195
PAN-CT5	18.0	0	111	111
PAN-CT6	18.0	0	111	111
PAN-ST3	18.0	0	195	195

POWER DEVELOPMENT ENERGY		WATS2002HS01	2002HSXM1&2B	DIFFERENCE
INTERCHANGE		0	550	550
GENERATION CHANGE		0	550	550
GENERATORS				
PDE-CT1	18.0	0	100	100
PDE-CT2	18.0	0	130	130
PDE-CT3	18.0	0	130	130
PDE-ST1	18.0	0	190	190

TABLE 7

PALO VERDE INTERCONNECTION WITH TODAY'S PALO VERDE SYSTEM
3455 MW : 2455 MW TO ARIZONA AND 1000 MW TO CALIFORNIA

ARIZONA		WATS2002HS01	2002HSXM12&3A3	DIFFERENCE
INTERCHANGE		2898	443	-2455
GENERATION CHANGE				-1240
AREA LOAD CHANGE				1215
GENERATORS				
AGFRAG56	13.8	110	50	-60
AGUAFR 3	18.0	84	52	-32
AGUAFR12	13.8	135	50	-85
CORONAD1	22.0	365	350	-15
CORONAD2	22.0	365	350	-15
HRSMS4	13.8	98	28	-70
MRMFT12	13.8	58	20	-38
OCOTGT1	13.8	56	26	-30
OCOTGT2	13.8	56	26	-30
OCOTILLO	13.8	229	50	-179
SAGUARO1	15.0	110	50	-60
SAGUARO2	15.0	79	25	-59
SANTNG13	13.8	125	95	-30
SANTNG24	13.8	135	95	-40
WPHX CC1	13.8	85	50	-35
WPHX CC2	13.8	85	50	-35
WPHX CC3	13.8	85	50	-35
SPR GEN1	19.0	380	260	-120
SPR GEN2	19.0	380	260	-120
IRVTGE1	13.8	80	55	-25
IRVTGE2	13.8	80	55	-25
IRVTGE3	13.8	104	54	-50
IRVTGE4	18.0	156	106	-50

LADWP		WATS2002HS01	2002HSXM12&3A3	DIFFERENCE
INTERCHANGE		-1362	-1162	200
GENERATION CHANGE				200
HOOVER REPLACEMENT				-500
TOTAL EOR DISTRIBUTION				-300
% OVER 1000 MW EOR SCHEDULE				30%
GENERATORS				
CASTAI1G	18.0	103	133	30
CASTAI2G	18.0	200	150	-50
CASTAI3G	18.0	200	150	-50
CASTAI4G	18.0	200	150	-50
CASTAI5G	18.0	80	150	70
CASTAI6G	18.0	80	150	70
HAYNES1G	18.0	175	220	45
HAYNES2G	18.0	175	220	45

TABLE 7

PALO VERDE INTERCONNECTION WITH TODAY'S PALO VERDE SYSTEM
3455 MW : 2455 MW TO ARIZONA AND 1000 MW TO CALIFORNIA

HAYNES3G	18.0	175	220	45
HAYNES4G	18.0	200	220	20
HAYNES6G	18.0	320	330	10
SCATT3G	24.0	400	425	25

SCE				
INTERCHANGE		WATS2002HS01	2002HSXM12&3A3	DIFFERENCE
GENERATION CHANGE		-6166	-6216	-50
HOOVER REPLACEMENT				-50
TOTAL EOR DISTRIBUTION				-500
% OVER 1000 MW EOR SCHEDULE				-550
				55%
GENERATORS				
ALAMT5G	20.0	252	202	-50

SDG&E				
INTERCHANGE		WATS2002HS01	2002HSXM12&3A3	DIFFERENCE
GENERATION CHANGE		-2300	-2450	-150
% OVER 1000 MW EOR SCHEDULE				-150
				15%
GENERATORS				
ENCINA 4	22.0	300	275	-25
ENCINA 5	24.0	330	300	-30
SOUTHBY4	20.0	217	122	-95

WAPA L.C.				
INTERCHANGE		WATS2002HS01	2002HSXM12&3A3	DIFFERENCE
GENERATION CHANGE		2233	1233	-1000
HOOVER REPLACEMENT (LADWP)				-1000
HOOVER REPLACEMENT (SCE)				500
				500
GENERATORS				
HOOVERA3	16.5	91	51	-40
HOOVERA4	16.5	115	52	-63
HOOVERA5	16.5	115	52	-63
HOOVERA6	16.5	115	52	-63
HOOVERA7	16.5	115	52	-63
HOVRA1A2	16.5	235	106	-129
HOVRA8A9	16.5	115	52	-63
HOVRN1N2	16.5	235	106	-129
HOVRN3N4	16.5	235	106	-129
HOVRN5N6	16.5	235	106	-129
HOVRN7N8	16.5	235	106	-129

TABLE 7

PALO VERDE INTERCONNECTION WITH TODAY'S PALO VERDE SYSTEM
3455 MW : 2455 MW TO ARIZONA AND 1000 MW TO CALIFORNIA

HARQUAHALA		WATS2002HS01	2002HSXM12&3A3	DIFFERENCE
INTERCHANGE		0	500	500
GENERATION CHANGE		0	500	500
GENERATORS				
HGC GEN1	21.0	0	125	125
HGC GEN2	21.0	0	125	125
HGC GEN3	21.0	0	125	125
HGC GEN4	21.0	0	125	125

DUKE ENERGY MANAGEMENT		WATS2002HS01	2002HSXM12&3A3	DIFFERENCE
INTERCHANGE		0	500	500
GENERATION CHANGE		0	500	500
GENERATORS		0	60	60
DEM GEN1	18.0	0	60	60
DEM GEN2	18.0	0	140	140
DEM GEN3	18.0	0	30	30
DEM GEN4	13.8	0	30	30
DEM GEN5	13.8	0	30	30
DEM GEN6	13.8	0	30	30
DEM GEN7	13.8	0	30	30
DEM GEN8	13.8	0	30	30
DEM GEN9	13.8	0	30	30
DEM GN10	13.8	0	30	30
DEM GN11	13.8			

SEMPRA		WATS2002HS01	2002HSXM12&3A3	DIFFERENCE
INTERCHANGE		0	500	500
GENERATION CHANGE		0	500	500
GENERATORS				
SEM CT1	18.0	0	90	90
SEM CT2	18.0	0	82	82
SEM CT3	18.0	0	82	82
SEM CT4	18.0	0	82	82
SEM ST1	18.0	0	82	82
SEM ST2	18.0	0	82	82

REDHAWK		WATS2002HS01	2002HSXM12&3A3	DIFFERENCE
INTERCHANGE		0	360	360
GENERATION CHANGE		0	360	360
GENERATORS				
RED-CT1	13.8	0	60	60
RED-CT2	13.8	0	60	60
RED-CT3	13.8	0	60	60

TABLE 7

PALO VERDE INTERCONNECTION WITH TODAY'S PALO VERDE SYSTEM
3455 MW : 2455 MW TO ARIZONA AND 1000 MW TO CALIFORNIA

RED-CT4	13.8	0	60	60
RED-CT5	13.8	0	60	60
RED-CT6	13.8	0	60	60

PANDA		WATS2002HS01	2002HSXM12&3A3	DIFFERENCE
INTERCHANGE		0	1245	1245
GENERATION CHANGE		0	1245	1245
GENERATORS				
PAN-CT1	18.0	0	110	110
PAN-CT2	18.0	0	110	110
PAN-ST1	18.0	0	195	195
PAN-CT3	18.0	0	110	110
PAN-CT4	18.0	0	110	110
PAN-ST2	18.0	0	195	195
PAN-CT5	18.0	0	110	110
PAN-CT6	18.0	0	110	110
PAN-ST3	18.0	0	195	195

POWER DEVELOPMENT ENERGY		WATS2002HS01	2002HSXM12&3A3	DIFFERENCE
INTERCHANGE		0	500	500
GENERATION CHANGE		0	500	500
GENERATORS				
PDE-CT1	18.0	0	100	100
PDE-CT2	18.0	0	100	100
PDE-CT3	18.0	0	100	100
PDE-ST1	18.0	0	200	200

Appendix C

Dynamic Models for the New Generation Projects

Appendix D

Power Flow Maps (To Be Provided)

Appendix E

Transient Stability Swing Plots (To Be Provided)

Appendix F

Post-Transient Q-V Analysis

SALT RIVER PROJECT 10 YEAR PLAN

2002 — 2011

APPENDIX 3

Testimony by Jennifer Tripp of R. W. Beck for Southwest Valley 500kV Project Siting Hearing

APPENDIX 4

Summary of Need for the Fountain Hills Station

01-07558 12/01

Southwest Valley 500kV Transmission Line Project

Application for a Certificate of Environmental Compatibility
Case No. 115

SRP®

SOUTHWEST VALLEY-500kV
TRANSMISSION LINE PROJECT

APS

Purpose and Need

Jennifer Tripp, P.E.

R.W. Beck

Principal

SRP®

SOUTHWEST VALLEY-500kV

TRANSMISSION LINE PROJECT

APS

Witness Background

- Bachelor of Science in Electrical Engineering, University of Cincinnati
- Over 15 years of experience in transmission and electric power system analysis
  - Testified in numerous cases before the Siting Committee
- R.W. Beck
  - Multidisciplinary engineering and technical consulting firm
  - Over 450 employees in 21 offices world wide
  - Planned, designed and reviewed electric power generating and transmission facilities since 1942
  - Worked with the Arizona bulk power system for over 25 years

Outline of Testimony

- Current Valley Transmission System
- System Requirements and Planning Issues
- Need for Southwest Valley Project
- Project Reliability

SRP®

SOUTHWEST VALLEY-500kV
TRANSMISSION LINE PROJECT

APS

Current Valley Transmission System

- Key EHV delivery points to load
- No load serving capability at Palo Verde

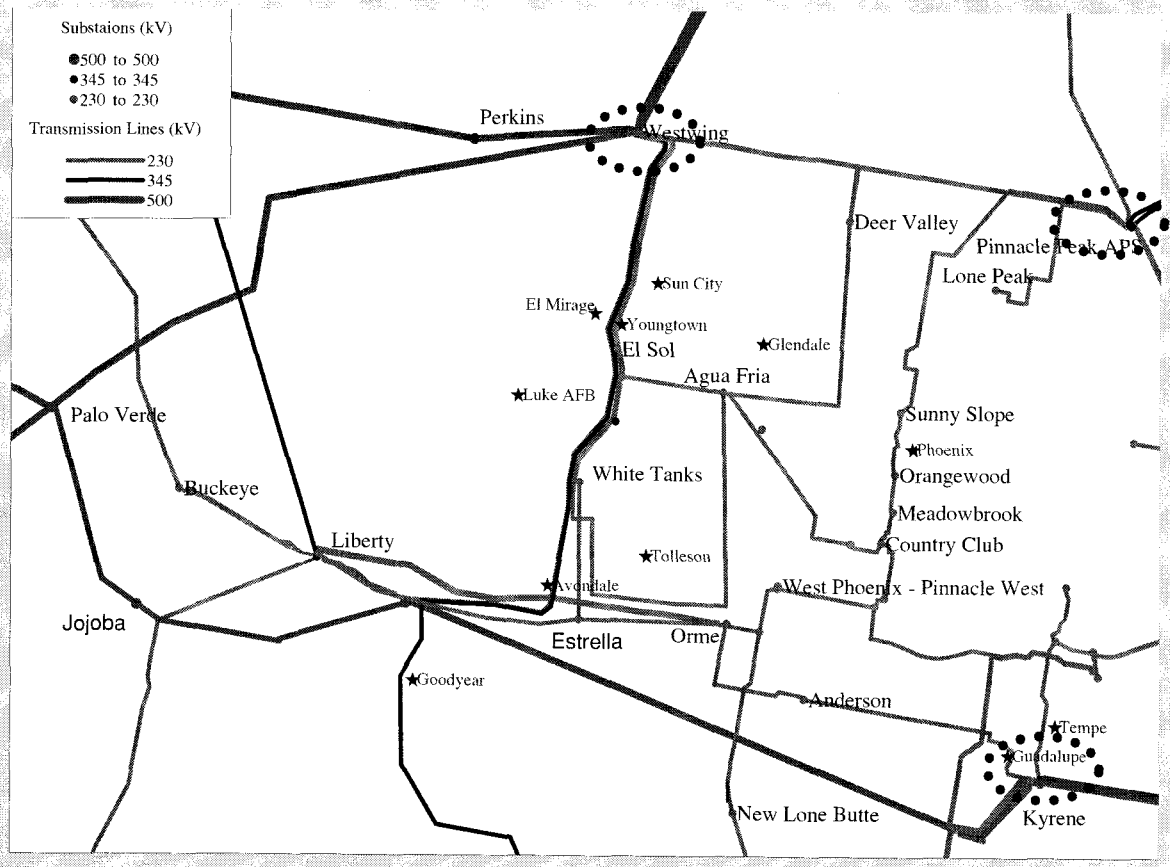

SOUTHWEST VALLEY-500kV
TRANSMISSION LINE PROJECT

SRP®

APS

System Planning

- Transmission planning
  - Ongoing and evolving process
  - Incorporates a large amount of complex and continuously changing data
  - Identifies need for additional transmission facilities
  - Goal is reliable and adequate transmission system to serve load

System Requirements

- In general, new transmission facilities are constructed to:
  - Deliver power from grid to areas experiencing growth
  - Facilitate economic power transfers
    - Remove "constraints" between load centers and generating resources
  - Attain a prescribed level of system reliability
    - Sustain loss of critical elements (e.g., "N-1" criteria)
    - Maintain adequate system voltage
  - Connect generation to the grid

System Requirements - Studies

Results of ongoing power flow studies will indicate the need for new facilities as demonstrated by:

- Thermal loading of facilities approaching limits
- System voltage levels
- Reduction in operating flexibility

Solutions to need are determined by evaluation of:

- System benefit
- Effectiveness including longevity of solution
- Cost and feasibility issues
- Does it alleviate need for other upgrades/additions

Southwest Valley Project

- Need for more load serving capability in West Valley
- Demonstrated by thermal loadings, voltages and reduction in operating flexibility
- Adds a key EHV delivery point to Phoenix area load

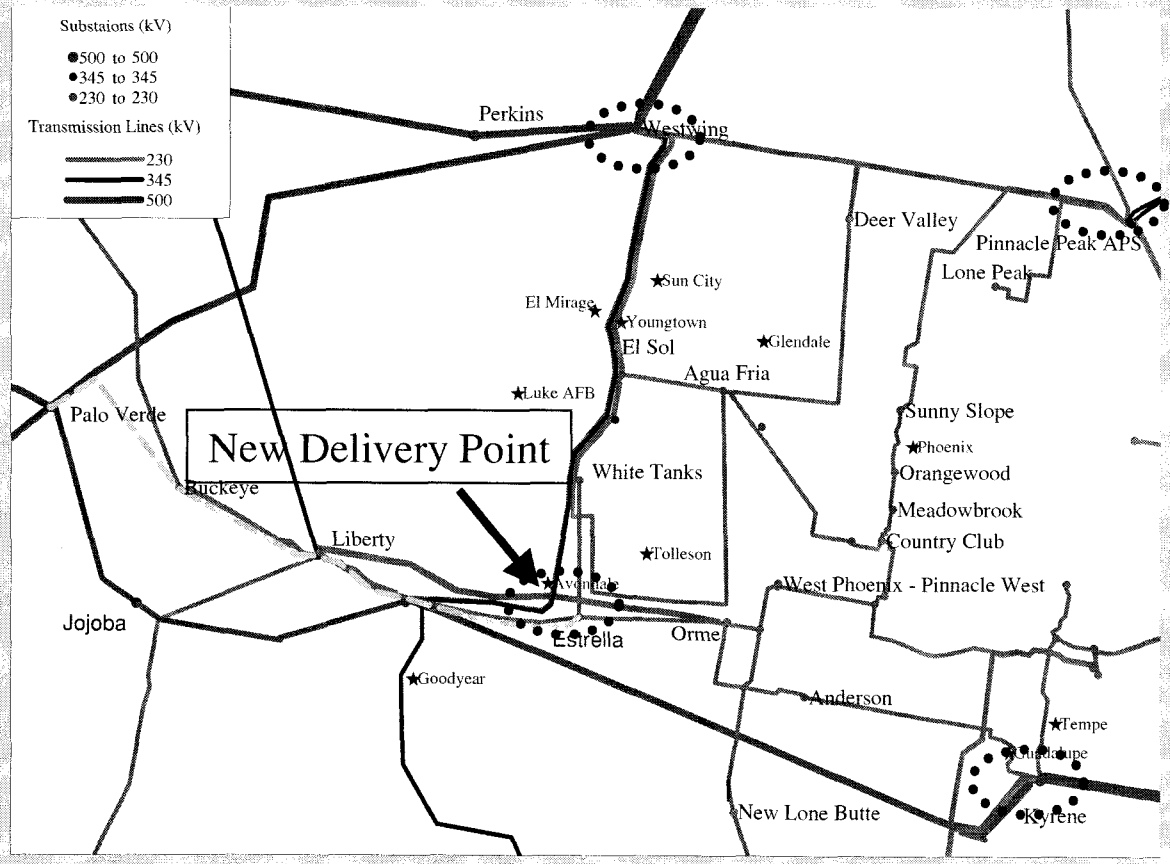

SOUTHWEST VALLEY 500kV
TRANSMISSION LINE PROJECT

SRP®

APS

Southwest Valley Project Impact

- Reduces flow on other West Phoenix load serving facilities
- Boosts Phoenix area system voltages
- Can be reliably integrated

Normal Condition Flows and Voltages

	Facility	Owner	Rating	w/o Southwest Valley			w/ Southwest Valley		
			N/E (MVA)	Flows (MW)	% of N Rtg	To Bus Voltage (kV)	Flows (MW)	% of N Rtg	To Bus Voltage (kV)
Xfmr	Westwing 500/230 kV #1	APS	1494	987	67%	517	769	53%	521
Xfmr	Westwing 500/230 kV #1	APS	1494	995	68%	517	776	53%	521
Xfmr	Westwing 500/230 kV #3	APS	1494	971	66%	517	757	52%	521
Line	Pinnacle Pk (SRP) - Deer Valley 230 kV	APS	478	60	26%	234	53	24%	236
Line	Lone Peak - Sunnyslope 230 kV	APS	438/539	232	53%	232	141	33%	234
Xfmr	Kyrene 500/230 kV #6	SRP	1233	947	77%	516	804	65%	520
Xfmr	Kyrene 500/230 kV #7	SRP	1233	863	70%	516	732	60%	520
Line	Kyrene - Anderson 230 kV	SRP	719/797	301	42%	231	79	15%	233
Xfmr	Liberty 345/230 kV	WAPA	500	143	31%	361	109	24%	363
Line	Liberty - Orme 230 kV	WAPA	498	375	75%	235	219	46%	237
Line	Palo Verde - SWV 500 kV	APS/SRP	2728	-	-	-	1164	41%	530
	SWV 230 kV Substation	SRP	-	-	-	231	-	-	233

SRP®

SOUTHWEST VALLEY-500kV
TRANSMISSION LINE PROJECT

APS

Southwest Valley Project Conclusions

- **Heavy load growth has driven the need**
  - Actual load growth consistently has exceeded utility load forecasts
- **The Project can be reliably integrated to the grid**
- **The Project increases Valley area load serving capability**
- **The Project relieves loading on the critical Palo Verde to Kyrene 500kV line**
- **The Project provides system voltage support**

SRP®

SOUTHWEST VALLEY-500kV TRANSMISSION LINE PROJECT

APS

SALT RIVER PROJECT 10 YEAR PLAN

2002 — 2011

APPENDIX 4

Summary of Need for the Fountain Hills Station

01-07558 12/01

2001 CAPITAL PROJECT DESCRIPTION

SRP

Budget Year 2007/2008

Date: January 29, 2002 ***Location:*** Fountain Area

Job Title: New Receiving Station or new 69kV line into the Fountain area

Project Summary: Construct a new Fountain Area Receiving Station or a new 69kV line of unknown mileage and origin in the Fountain area by 05/08.

Description of Work:

RECEIVING STATION WORK

- New Receiving station in the Fountain Hills area.

RECEIVING STATION SUBTOTAL $12,000,000

69KV LINE WORK

- Unknown

69KV LINE SUBTOTAL $

12KV LINE WORK

- None

12KV LINE SUBTOTAL $
ESTIMATED TOTAL $12,000,000

In-Service Date: April 30, 2008

_____ _____
Manager ***Date***

Load Growth Project, TSP Contact Gary Romero (69kV)

Justification:

- During summer peak loading with all projects in, the voltage in the Fountain area falls below the minimum acceptable level at several 69kV stations for an Evergreen/Pima outage. A new receiving station and associated 69kV line work in the area will provide more long-term voltage support than the addition of capacitor banks.

NOTE: This option will require further evaluation of viable options before any design begins.

2001 Project Summary: Construct a new Fountain Area Receiving Station or a new 69kV line of unknown mileage and origin in the Fountain area by 05/07.

SALT RIVER PROJECT

10 YEAR PLAN

2002 — 2011

01-07558 12/01

SALT RIVER PROJECT

TEN-YEAR PLAN

2002 - 2011

Prepared for the

Arizona Corporation Commission

January 2002

SALT RIVER PROJECT

OVERALL TRANSMISSION REVIEW
2002 - 2011

This report updates and replaces the ten-year transmission plan of the Salt River Project Agricultural Improvement and Power District (SRP), submitted January 2001 pursuant to A.R.S. Section 40-360.02. The following general review is intended to complement and clarify the individual tabular pages included herein.

CENTRAL ARIZONA TRANSMISSION SYSTEM (CATS) STUDY

Since the plan was filed last year, the Phase I CATS work has been completed. The CATS Phase I study was to develop a framework for the participating parties to plan and coordinate transmission lines and receiving stations in the central Arizona region (see Attachment A). The study identified how the timing and phasing of projects can be done in a coordinated manner. The report for that work is attached to this submission as Appendix 1.

The interested and affected parties will file for those segments of the overall system in which they will have primary responsibility or management. SRP will be the project manager for the 500kV line from Palo Verde area to Southeast Valley Station. SRP will be the owner of the loop-in of the Silver King – Browning 500kV line into the Southeast Valley Station, and 230kV ties from the Southeast Valley Station into the existing 230kV transmission system. These projects are reflected in the description sheets following the narrative.

Subsequent to the completion of Phase I of the CATS study, several of the participating utilities and other market participants embarked upon studies to define the underlying systems necessary to efficiently and effectively integrate their existing systems into the CATS plan. Those studies are

in process, and the results of those studies may result in revised projects or additional projects in the 10 Year Plans for the next submission. A summary of the progress of this work is found in Appendix 1.

500kV TRANSMISSION

The SRP 500kV transmission system is shown on Attachment B. It includes the transmission lines from the Palo Verde Nuclear Generating Station, Coronado Generating Station and Marketplace to the Phoenix area.

Arizona Public Service Company (APS) and SRP have performed the environmental studies and the public processes to site and develop the Palo Verde to Southwest Valley 500kV Transmission Project. In June of 2001, APS and SRP submitted an application to the Arizona Corporation Commission requesting a Certificate of Environmental Compatibility be awarded to the two companies for this project. In December of 2001, the Arizona Power Plant and Transmission Line Siting Committee approved the CEC. APS and SRP are awaiting final approval from the Arizona Corporation Commission.

APS and SRP need the Southwest Valley 500kV Transmission Project to adequately increase resource import levels and to provide needed load-serving capabilities. Supporting documentation for this project is found in Appendices 2 and 3.

230kV TRANSMISSION

SRP's Valley 230kV transmission network is used to transmit power from the bulk power stations on the periphery of the Phoenix metropolitan area to the various load centers in SRP's Valley service territory (Attachment C). Additional transmission capacity will be required during the next ten years to meet load growth and for system reliability.

A 230kV line from the Silver King Station to the new Browning 500/230kV Receiving Station is planned to deliver power to the eastern part of SRP's service territory for service to distribution load and system reliability. This line has been in the SRP Ten-Year Plan submission as the Silver King to Santan 230kV, identified as a part of the Coronado Transmission System upgrades for future unit additions at Coronado or in eastern Arizona. With the installation of Browning and the Browning – Santan 230kV line in 2001, SRP needs to complete only the remaining segment from Silver King to Browning. Provision has also been made for a future tie line between a point on the Silver King-Browning 230kV Line and the Superior 115kV Station. These lines are identified in this Ten-Year Plan in recognition that it is possible they could be placed in-service during the next ten years.

Preliminary transmission study work done in conjunction with the Browning Station development identified longer-term needs for 500kV and 230kV transmission in the area of Browning Station and to the east. Development of residential communities and industrial and commercial facilities is driving the need for additional electrical service to accommodate the electrical load associated with those developments. SRP's Browning Project is now in service. The project has been operating since May of 2001. This project provides for a much needed delivery point in the East Valley. However, as the load grows, SRP will require additional transmission to connect generation resources planned and being constructed in the western, central, and southern parts of the state to the customer load in the greater Phoenix area. With the construction of the Southeast Valley Project, 230kV transmission lines will have to be built into Browning to facilitate the delivery of that power and to provide for reliable service to our customers.

The needed 230kV lines are shown on the 500kV facilities map, the 230kV facilities map, and in the descriptive pages following this section. Those facilities include the future RS23 station in the Queen Valley/Florence Junction area, the future RS19 230/69kV Station in the Queen Creek area,

and the 230kV transmission lines to interconnect these stations and the existing system. SRP has projected loads for the area at build-out that suggest the existing 230/69kV stations will be over utilized in the longer term. RS19 and RS23 were identified as two new stations to accommodate the load growth expected in the far eastern end of the SRP service territory.

We continue to note transmission projects that take advantage of existing transmission corridors and open circuit positions on existing transmission structures. We are including these as informational items that may become firm plans, as our system studies look farther into the future. In this category we are reporting a Westwing to Pinnacle Peak 230kV line, a Pinnacle Peak to Brandow 230kV line with a possible loop into Rogers or Thunderstone, and a Rogers to Corbell 230kV line. These lines have been identified in past submissions of the plan as "place holders" since they will be included in any future analyses to find solutions to system problems. They are again included in this plan for information purposes. When system conditions are such that these facilities are needed, more definitive descriptions and schedules will be developed and submitted for the projects.

SRP has identified the need for the future RS17 230/69kV receiving station in the Gilbert/Queen Creek area. Last year we reported the need to be in 2007. The need has moved beyond our six-year planning window, however, the station is still needed to support the growth in the Gilbert/Queen Creek area. The station site was established during a previous environmental study for the RS16 (Schrader) transmission line siting process (Case No. 86). Initial service to RS17 will utilize existing transmission lines constructed in 1998 for the Schrader project.

Another future 230/69kV receiving station was identified during the RS18 (Browning Station) work. RS19 will be needed to serve load in the eastern Queen Creek and southern Apache Junction areas. SRP envisions service to this station to come from transmission lines associated with the

Southeast Valley Station development and will note so in the application for the Certificate of Environmental Compatibility for that project.

SRP has identified the need for a 230/69kV receiving station in the Fountain Hills area. The projected load in the area will stress the underlying 69kV system to its limits by approximately 2008. This new station will provide a source for the growth in the area besides the existing 69kV system. The transmission lines that will feed this station are unknown at present. Initial planning work will begin during this year.

EASTERN MINING AREA TRANSMISSION

Additional transmission facilities will eventually be required in SRP's Eastern Mining Area (Attachment D). As mining loads increase between Superior and Hayden, a 230kV line from Silver King to New Hayden will be required. Depending on where new load is added, this 230kV line may have an intermediate termination at Knoll Station. The line may be constructed in phases, with the Silver King to Knoll line being constructed first, followed by Knoll to New Hayden when required. The existing 115kV line from Kearny to Hayden will be looped into the New Hayden Station. The in-service dates for these lines are contingent upon customer need.

Any future facilities which might have appeared in previous Ten-Year Plans, but which are not shown in this plan, are either completed, no longer scheduled in the period covered, or are no longer required to be part of the Ten-Year Plan.

Attached as Appendix 4 to this report is a summary of SRP's 6 year planning work of this past year to support the need for the work reflected in this report.

January 2002

SALT RIVER PROJECT
TEN-YEAR PLAN
TRANSMISSION FACILITIES
2003

LINE DESIGNATION:		Palo Verde - Southwest Valley 500kV Project
SIZE:		
(a)	Voltage	500kV
(b)	Capacity	1200 MVA
(c)	Point of Origin	Palo Verde Generating Station Switchyard SEC 34, T1N, R6W
(d)	Point of Termination	Estrella Switchyard site at Broadway and 119th Avenue SEC 24, T1N, R1W
(e)	Length	Dependent upon final approval by ACC

ROUTING: Dependent upon final approval by Arizona Corporation Commission.

PURPOSE: To provide adequate transmission capacity to serve load growth in to the southwestern part of the SRP distribution service territory and to provide another bulk power source into the southwestern part of the Phoenix metropolitan area.

DATE:

(a)	Construction to Start:	February 2002
(b)	Estimated In-Service Date:	June 2003*

NOTES:

An application for a Certificate of Environmental Compatibility was filed on 6/13/2001. Subsequent hearings resulted in a decision from the Power Plant and Transmission Line Siting Committee to award the Certificate. Applicants (Arizona Public Service and Salt River Project) are awaiting final decision by the Arizona Corporation Commission.

* Assumes award of the CEC by February of 2002.

January 2002

SALT RIVER PROJECT
TEN-YEAR PLAN
TRANSMISSION FACILITIES
2006

LINE DESIGNATION:		Palo Verde – Southeast Valley Station 500kV Line
SIZE:		
(a)	Voltage	500kV
(b)	Capacity	1200MVA
(c)	Point of Origin	Palo Verde Generating Station Switchyard/Hassayampa SEC 15, T1S, R6W
(d)	Intermediate Point	Site in the Mobile area TBD (T4S, R1E)
(e)	Point of Termination	Southeast Valley Station TBD (T3S, R9E)
(f)	Length	Approximately 100 Miles

ROUTING: Dependent upon final approval by Arizona Corporation Commission.

PURPOSE: The Central Arizona Transmission Study task force developed a number of system additions necessary to accommodate load growth in the central Arizona area. This transmission line will provide for additional transmission to accommodate the load growth SRP is experiencing in the eastern part of the greater Phoenix area, and also provide for a redundant transmission path for SRP's Palo Verde allocation into the greater Phoenix area.

DATE:

(a)	Right of Way/Property Acquisition:	Fall 2003
(b)	Construction to Start:	Fall 2004
(c)	Estimated In Service Date:	Summer 2006

January 2002

SALT RIVER PROJECT
TEN-YEAR PLAN
TRANSMISSION FACILITIES
2006

LINE DESIGNATION:		Silver King – Southeast Valley Station 500kV Line #1 & #2
SIZE:		
(a)	Voltage	500kV
(b)	Capacity	1200MVA
(c)	Point of Origin	A point on the Silver King – Browning Line TBD (T2S, R9E)
(d)	Point of Termination	Southeast Valley Station TBD (T3S, R9E)
(e)	Length	Approximately 10 Miles

ROUTING: Dependent upon final approval by Arizona Corporation Commission.

PURPOSE: This interconnection is an additional transmission facility identified through the CATS study work. This project loops the Silver King – Browning 500kV line into the Southeast Valley Station to provide for a redundant delivery path for the energy being delivered from Palo Verde, and to provide for the operational flexibility necessary to ensure deliveries to customers within the greater Phoenix Metropolitan area.

DATE:

(a)	Right of Way/Property Acquisition:	Fall 2003
(b)	Construction to Start:	Fall 2004
(c)	Estimated In Service Date:	Summer 2006

NOTES:

SRP does not hold a Certificate of Environmental Compatibility for this project, but will be seeking a Certificate subsequent to an environmental and public process to site the lines.

SALT RIVER PROJECT
TEN-YEAR PLAN
TRANSMISSION FACILITIES
2006

LINE DESIGNATION:		Browning – Southeast Valley Station 230kV Line #1 and #2
SIZE:		
(a)	Voltage	230kV
(b)	Capacity	875MVA each
(c)	Point of Origin	Browning Station SEC 12, T1S, R7E
(d)	Intermediate Point	Future RS19 Station TBD (T2S, R8E)
(e)	Point of Termination	Southeast Valley Station TBD (T3S, R9E)
(f)	Length	Approximately 25 miles

ROUTING: Generally south and east of the Browning station to the Southeast Valley Station. Routing will be determined through an environmental and public process.

PURPOSE: Provides the initial interconnection from the 500kV facilities at Southeast Valley Station to the existing 230kV network serving the east valley area.

DATE:

(a)	Right of Way/Property Acquisition:	Fall 2003
(b)	Construction to Start:	Fall 2004
(c)	Estimated In Service Date:	Summer 2006

NOTES:

Previously described in the Rogers – Coolidge 230kV line description in the 2001 Plan.

SRP does not hold a Certificate of Environmental Compatibility for this 230kV transmission line project. SRP will make application upon completion of the environmental and public planning processes necessary to site the line.

SALT RIVER PROJECT
TEN-YEAR PLAN
TRANSMISSION FACILITIES
2008

LINE DESIGNATION:		Fountain Hills Station
SIZE:		
(a)	Voltage	115kV, 230kV, or 345kV
(b)	Capacity	560 MVA
(c)	Point of Origin	To Be Determined
(d)	Point of Termination	Fountain Hills Station Northeast Scottsdale/Fountain Hills area
(e)	Length	To Be Determined

ROUTING: SRP will embark upon a facilities siting/environmental assessment/public process to determine the location of the station and the transmission lines supplying the station.

PURPOSE: Provide a source for the development occurring in and around the Fountain Hills area, as well as relieve the stress on the lower voltage system currently supplying the Fountain Hills/Rio Verde area.

DATE:

(a)	Right of Way/Property Acquisition:	2005*
(b)	Construction to Start:	2007
(c)	Estimated In-service Date:	2008

NOTES:

An application for a Certificate of Environmental Compatibility has not yet been filed.

* Contingent upon final plan of service for the station and the transmission lines supplying the station.

January 2002

SALT RIVER PROJECT
TEN-YEAR PLAN
TRANSMISSION FACILITIES
TBA

LINE DESIGNATION:		Palo Verde – Saguaro Line
SIZE:		
(a)	Voltage	500kV
(b)	Capacity	1200MVA
(c)	Point of Origin	Palo Verde Generating Station Switchyard/Hassayampa SEC 15, T1S, R6W
(d)	Intermediate Point	Site in the Mobile area TBD (T4S, R1E)
(e)	Point of Termination	Saguaro Station SEC 14, T10S, R10E
(f)	Length	Approximately 125 miles

ROUTING: Generally south and east from the Palo Verde area to a point near Gillespie Dam, then generally easterly until the point at which the Palo Verde – Kyrene 500kV line diverges to the north and east. The corridor then is generally south and east again adjacent to a gas line corridor until meeting up with the Tucson Electric Power Company's Westwing – South 345kV line. The corridor follows the 345kV line until a point due west of the Saguaro Generating Station. The corridor then follows a lower voltage line into the 500kV yard just south and east of the generating station.

PURPOSE: Provide for the delivery of power and energy from the Palo Verde area into the central and southern portions of Arizona.

DATE:

(a)	Right of Way/Property Acquisition:	To Be Announced
(b)	Construction to Start:	To Be Announced
(c)	Estimated In Service Date:	To Be Announced

NOTES:
A Certificate of Environmental Compatibility was applied for and granted in 1974 for this line (Case No. 24).

SRP is including this description sheet as a CATS participant and as one of the participants in the siting and right of way acquisition for this project.

January 2002

SALT RIVER PROJECT
TEN-YEAR PLAN
TRANSMISSION FACILITIES
TBA

LINE DESIGNATION:		Rogers – Browning 230kV line
SIZE:		
(a)	Voltage	230kV
(b)	Capacity	875MVA
(c)	Point of Origin	Rogers Station SEC13, T1N, R5E
(d)	Point of Termination	Browning Station SEC12, T1S, R7E
(e)	Length	Approximately 8 miles

ROUTING: To be determined through environmental and public processes, but generally east and south from Rogers. One possible solution is the reconstruction of an existing Western Area Power Administration line to double circuit capability with SRP occupying the second circuit position.

PURPOSE: Provide adequate transmission facilities to deliver reliable power and energy to SRP's customers in the eastern valley area.

DATE:

(a)	Right of Way/Property Acquisition:	To Be Announced
(b)	Construction to Start:	To Be Announced
(c)	Estimated In Service Date:	To Be Announced

NOTES:

Previously described in the Rogers – Coolidge 230kV line description in the 2001 Plan.

SRP does not hold a Certificate of Environmental Compatibility for a 230kV transmission line in the corridor described above.

SALT RIVER PROJECT
TEN-YEAR PLAN
TRANSMISSION FACILITIES
TBA

LINE DESIGNATION:		Silver King to Browning
SIZE:		
(a)	Voltage	230kV
(b)	Capacity	875 MVA
(c)	Point of Origin	Silver King Station Parts of SEC 15 & 16, T1S, R13E
(d)	Point of Termination	Browning 500/230kV Station SEC 12, T1S, R7E
(e)	Length	38 miles*

ROUTING: From Silver King in a westerly direction to Browning

PURPOSE: To deliver Coronado or other power to the eastern part of SRP's distribution service territory

DATE:		
(a)	Construction to Start:	To Be Announced
(b)	Estimated In-Service Date:	To Be Announced

NOTES:

A Certificate of Environmental Compatibility exists for the segment of this line from the Browning station to a point on the Silver King – Kyrene 500kV line corridor in Apache Junction (T1S, R8E, Section 11 & 12) (Case No. 20).

This information is included in this Ten-Year Plan because the in-service date could advance into the 10-year reporting period.

* 17 miles of conductor will be strung on existing lattice towers. The remaining 21 miles of the line will be new construction.

SALT RIVER PROJECT
TEN-YEAR PLAN
TRANSMISSION FACILITIES
TBA

LINE DESIGNATION:		Silver King-Browning 230kV/Superior Tie
SIZE:		
(a)	Voltage	230kV
(b)	Capacity	875 MVA
(c)	Point of Origin	Point on the Silver King to Browning 230kV transmission line SEC 34, T1S, R12E
(d)	Point of Termination	Superior Station SEC 34, T1S, R12E
(e)	Length	Approximately 1/2 mile

ROUTING: Southeast from the proposed Silver King to Browning Line to the existing Superior Station.

PURPOSE: To provide adequate transmission capacity to meet future load growth and/or to improve electric system reliability in SRP's eastern distribution service area.

DATE:

(a)	Construction to Start:	To Be Announced
(b)	Estimated In-Service Date:	To Be Announced

NOTES:

An application for a Certificate of Environmental Compatibility has not yet been filed.

This information is included in this Ten-Year Plan because the in-service date could advance into the 10-year reporting period.

SALT RIVER PROJECT
TEN-YEAR PLAN
TRANSMISSION FACILITIES
TBA

LINE DESIGNATION:		RS19 to RS23
SIZE:		
(a)	Voltage	230kV
(b)	Capacity	875MVA
(c)	Point of Origin	Future RS19, Queen Creek area TBD, T2S, R8E
(d)	Point of Termination	Future RS23, Florence Junction area TBD, T1(or 2)S, R10E
(e)	Length	To Be Announced

ROUTING: Easterly from the future RS19 Station (Queen Creek area) to the future RS23 (Florence Junction area).

PURPOSE: To meet expected load growth in the eastern distribution area.

DATE:

(a)	Construction to Start:	To Be Announced
(b)	Estimated In-Service Date:	To Be Announced

NOTES:

An application for a Certificate of Environmental Compatibility has not yet been filed.

This information is included in this Ten-Year Plan because the in-service date could advance into the 10-year reporting period.

SALT RIVER PROJECT
TEN-YEAR PLAN
TRANSMISSION FACILITIES
TBA

LINE DESIGNATION:		Westwing to Pinnacle Peak
SIZE:		
(a)	Voltage	230kV
(b)	Capacity	875 MVA
(c)	Point of Origin	Westwing Station SEC 12, T4N, R1W
(d)	Point of Termination	Pinnacle Peak Station SEC 10, T4N, R4E
(e)	Length	Approximately 22 miles

ROUTING: Along existing Westwing to Pinnacle Peak right-of-way

PURPOSE: To provide additional transfer capability from the northwest Phoenix area to the northeast Phoenix area.

DATE:

(a)	Construction to Start:	To Be Announced
(b)	Estimated In-Service Date:	To Be Announced

NOTES:

Existing corridor predates the CEC process.

This information is included in this Ten-Year Plan because the in-service date could advance into the 10-year reporting period.

SALT RIVER PROJECT
TEN-YEAR PLAN
TRANSMISSION FACILITIES
TBA

LINE DESIGNATION:		Pinnacle Peak to Brandow (with Future tie into Rogers or Thunderstone)
SIZE:		
(a)	Voltage	230kV
(b)	Capacity	875 MVA
(c)	Point of Origin	Pinnacle Peak Station SEC 10, T4N, R4E
(d)	Point of Termination	Brandow Station SEC 11, T1N, R4E
(e)	Length	To Be Announced

ROUTING: Use of existing empty circuit position on SRP Pinnacle Peak – Papago Buttes 230kV line from Pinnacle Peak to Brandow; easterly from a point on that line to a termination at either Rogers or Thunderstone.

PURPOSE: Provide adequate transmission capacity to accommodate SRP customer load.

DATE:

(a)	Construction to Start:	To Be Announced
(b)	Estimated In-Service Date:	To Be Announced

NOTES:

An application for a Certificate of Environmental Compatibility has not yet been filed. SRP has a CEC for the Pinnacle Peak to Brandow 230kV transmission line (Case No. 69).

This information is included in this Ten-Year Plan because the in-service date could advance into the 10-year reporting period.

SALT RIVER PROJECT
TEN-YEAR PLAN
TRANSMISSION FACILITIES
TBA

LINE DESIGNATION:		Rogers to Corbell
SIZE:		
(a)	Voltage	230kV
(b)	Capacity	875 MVA
(c)	Point of Origin	Rogers Station SEC13, T1N, R5E
(d)	Point of Termination	Corbell Station SEC10, T1S, R5E
(e)	Length	Approximately 12 miles

ROUTING: Use of existing empty circuit position on existing 230kV structures in the area.

PURPOSE: Provide adequate transmission capacity to accommodate future load growth.

DATE:

(a)	Construction to Start:	To Be Announced
(b)	Estimated In-Service Date:	To Be Announced

NOTES:

SRP will be using existing structures for its entirety.

This information is included in this Ten-Year Plan because the in-service date could advance into the 10-year reporting period.

SALT RIVER PROJECT
TEN-YEAR PLAN
TRANSMISSION FACILITIES
TBA

LINE DESIGNATION:		Silver King to Knoll to New Hayden
SIZE:		
(a)	Voltage	230kV
(b)	Capacity	875 MVA
(c)	Point of Origin	Silver King Station Parts of SEC 15 & 16, T1S, R13E
(d)	Points of Termination	Knoll Station SEC 23, T3S, R13E New Hayden Station SEC 7, T5S, R15E
(e)	Length	Approximately 35 miles

ROUTING: South from Silver King, looped into Knoll, continuing to the Hayden area.

PURPOSE: To increase the transmission capacity to serve a new mining load.

DATE:

(a)	Construction to Start:	To Be Announced *
(b)	Estimated In-service Date:	To Be Announced *

NOTES:

An application for a Certificate of Environmental Compatibility has not yet been filed.

This information is included in this Ten-Year Plan because the in-service date could advance into the 10-year reporting period.

* Contingent upon customer need.

SALT RIVER PROJECT
TEN-YEAR PLAN
TRANSMISSION FACILITIES
TBA

LINE DESIGNATION:		Point on the Kearny-Hayden 115kV line to New Hayden; double circuit loop
SIZE:		
(a)	Voltage	115kV
(b)	Capacity	190 MVA
(c)	Point of Origin	Point on Kearny to Hayden 115kV Line, SEC 7, T5S, R15E
(d)	Point of Termination	New Hayden Station SEC 7, T5S, R15E
(e)	Length	Approximately 0.75 miles

ROUTING: Southwest from the existing Kearny-Hayden 115kV line to the New Hayden Transmission Station.

PURPOSE: To increase the transmission capacity to serve a new mining load.

DATE:

(a)	Construction to Start:	To Be Announced *
(b)	Estimated In-service Date:	To Be Announced *

NOTES:

An application for a Certificate of Environmental Compatibility has not yet been filed.

This information is included in this Ten-Year Plan because the in-service date could advance into the 10-year reporting period.

* Contingent upon customer need.

TABLE OF APPENDICES

Appendix 1
Report on the Phase I Study of the Central Arizona Transmission System (CATS)

Prepared for the CATS Steering Committee by Arizona Public Service, Salt River Project, and Tucson Electric Power dated July 20, 2001

Study Plan and Timeline for CATS Phase II

Appendix 2
Report on the Preliminary Study for the Palo Verde Interconnection

Prepared for the Palo Verde Interconnectors and the Western Arizona Transmission System Task Force by Salt River Project dated March 2, 2001

Appendix 3
Testimony by Jennifer Tripp of RWBeck for Southwest Valley 500kV Project Siting Hearing

Appendix 4
Summary of need for the Fountain Hills Station

Central Arizona Transmission System (CATS) Study

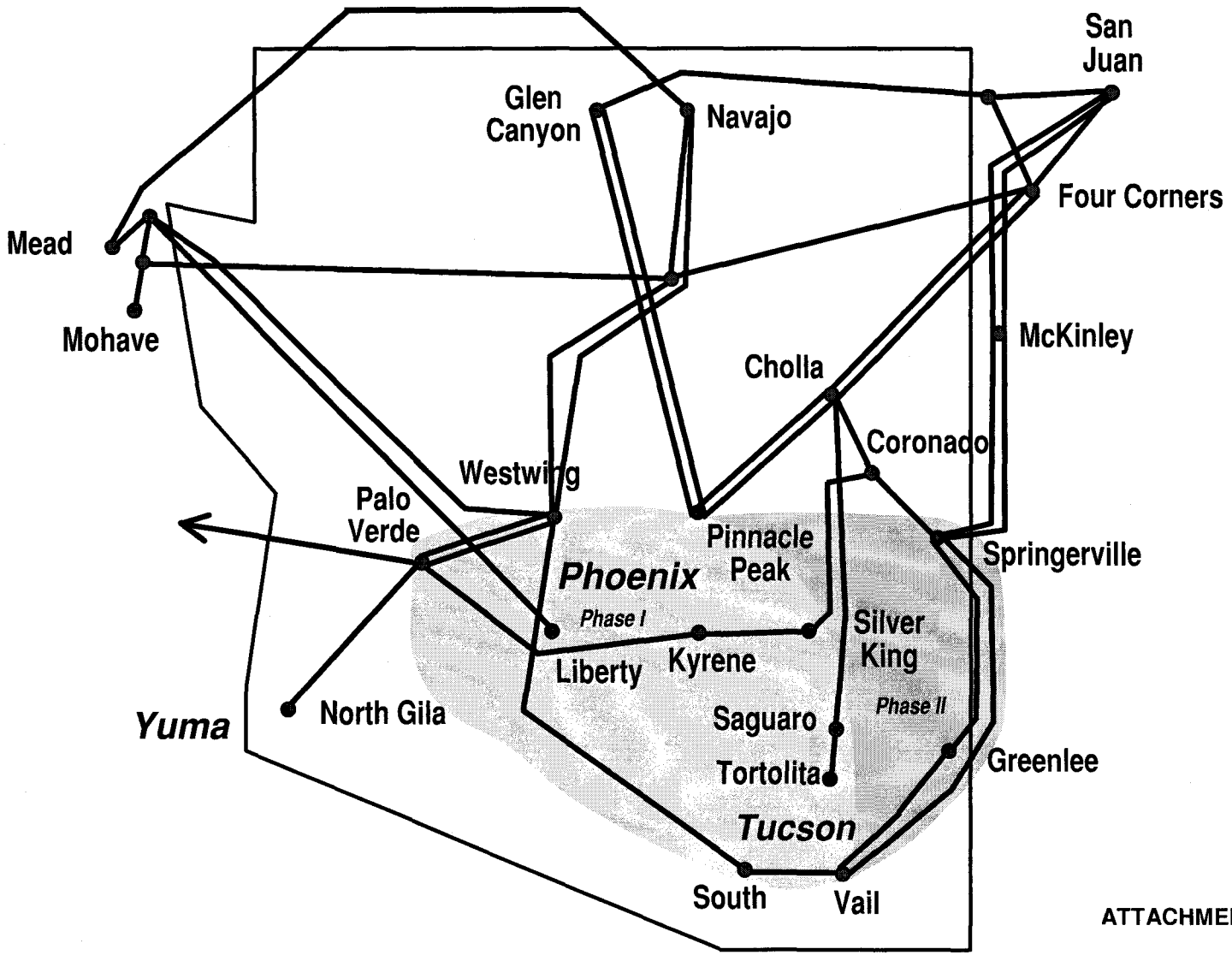

ATTACHMENT A

1/31/02 000705-1

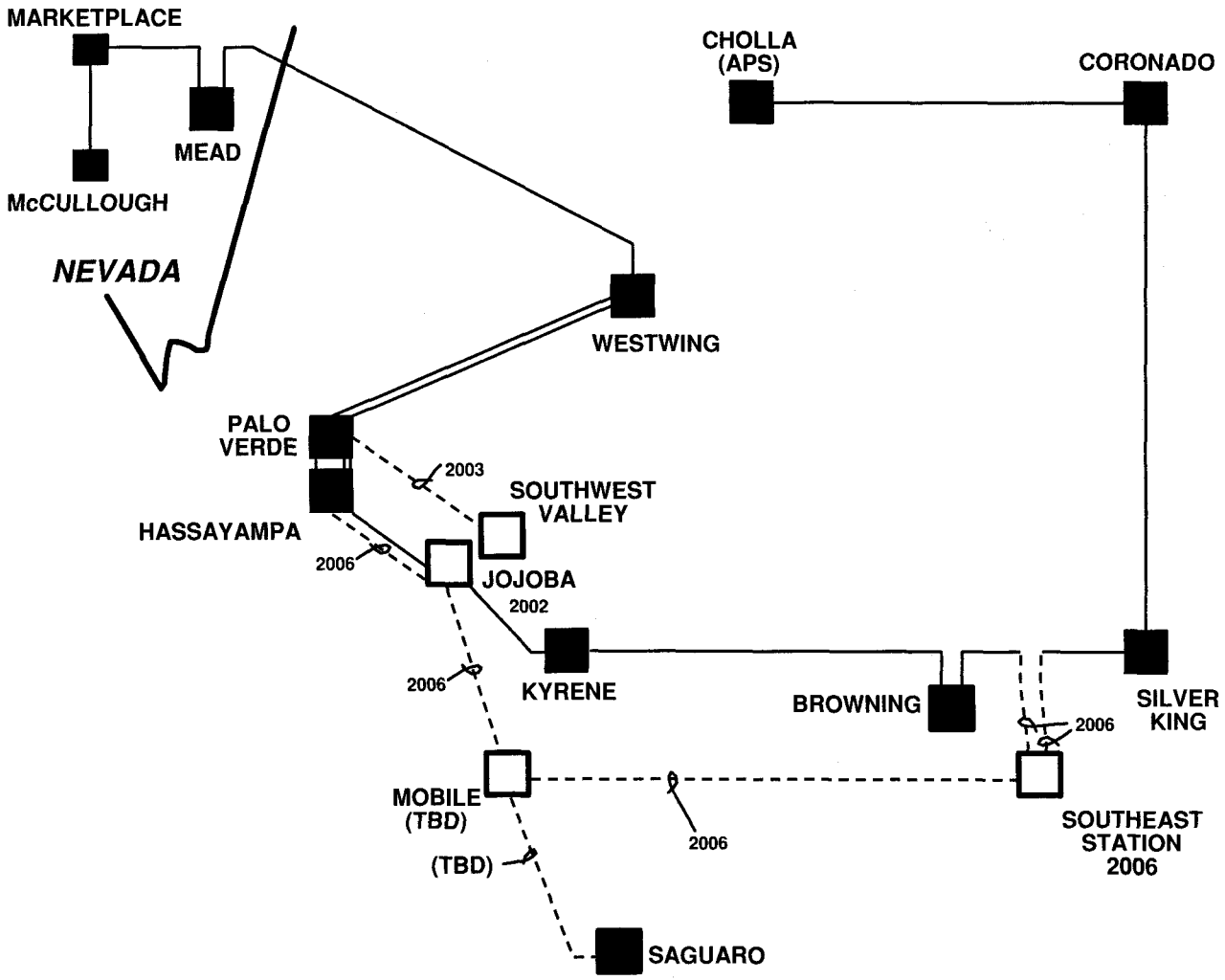

FUTURE 500kV SUBSTATION

EXISTING 500kV SUBSTATION

EXISTING LINES

FUTURE LINES

JANUARY 1, 2002

SALT RIVER PROJECT
500kV SYSTEM

ATTACHMENT B

1/31/02 000705-2

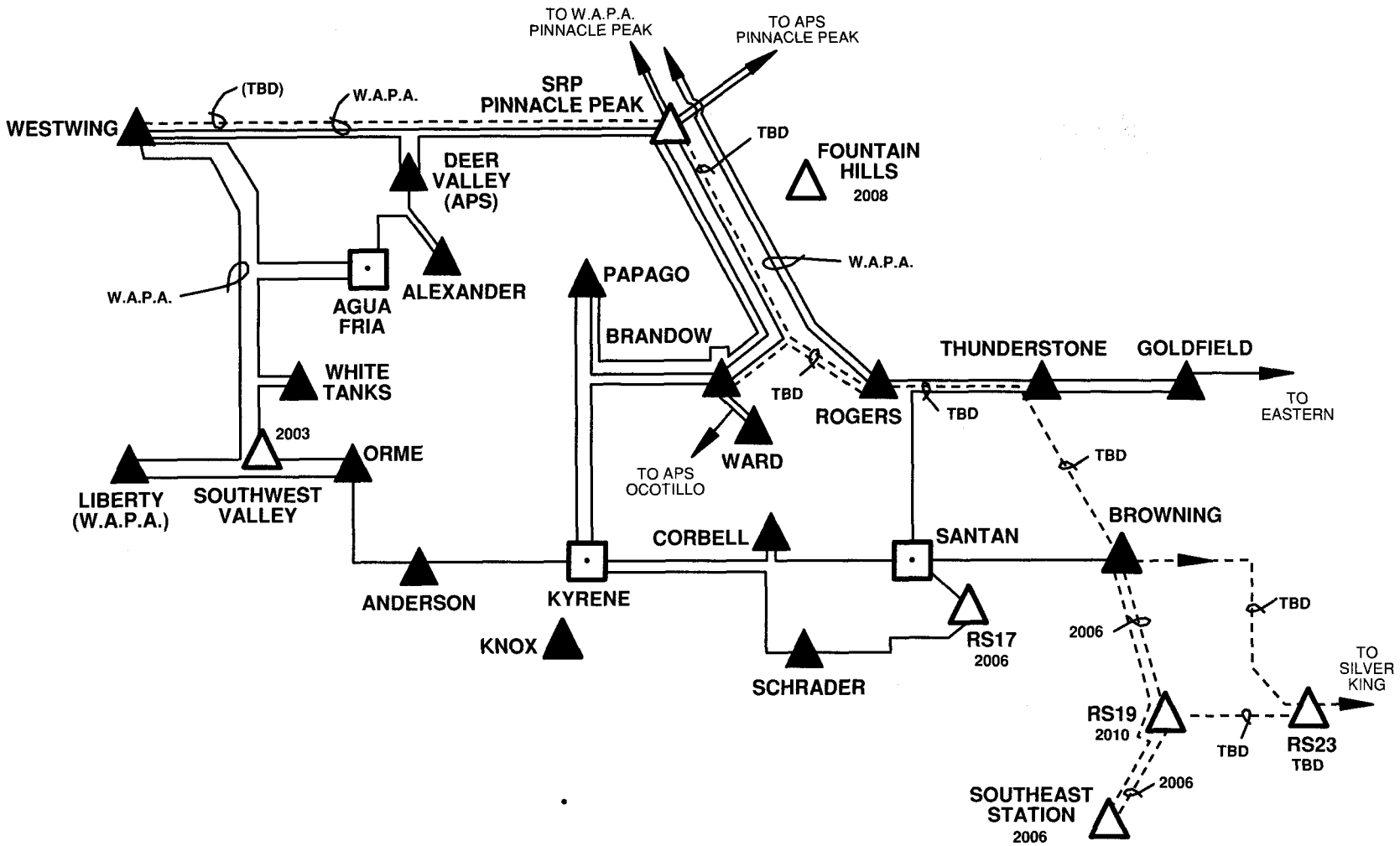

FUTURE 230kV SUBSTATIONS

EXISTING 230kV SUBSTATIONS

GENERATING STATION

EXISTING 230kV CIRCUIT

FUTURE 230kV CIRCUIT

JANUARY 1, 2002

SALT RIVER PROJECT
230kV SYSTEM

ATTACHMENT C

1/31/02 000705-3

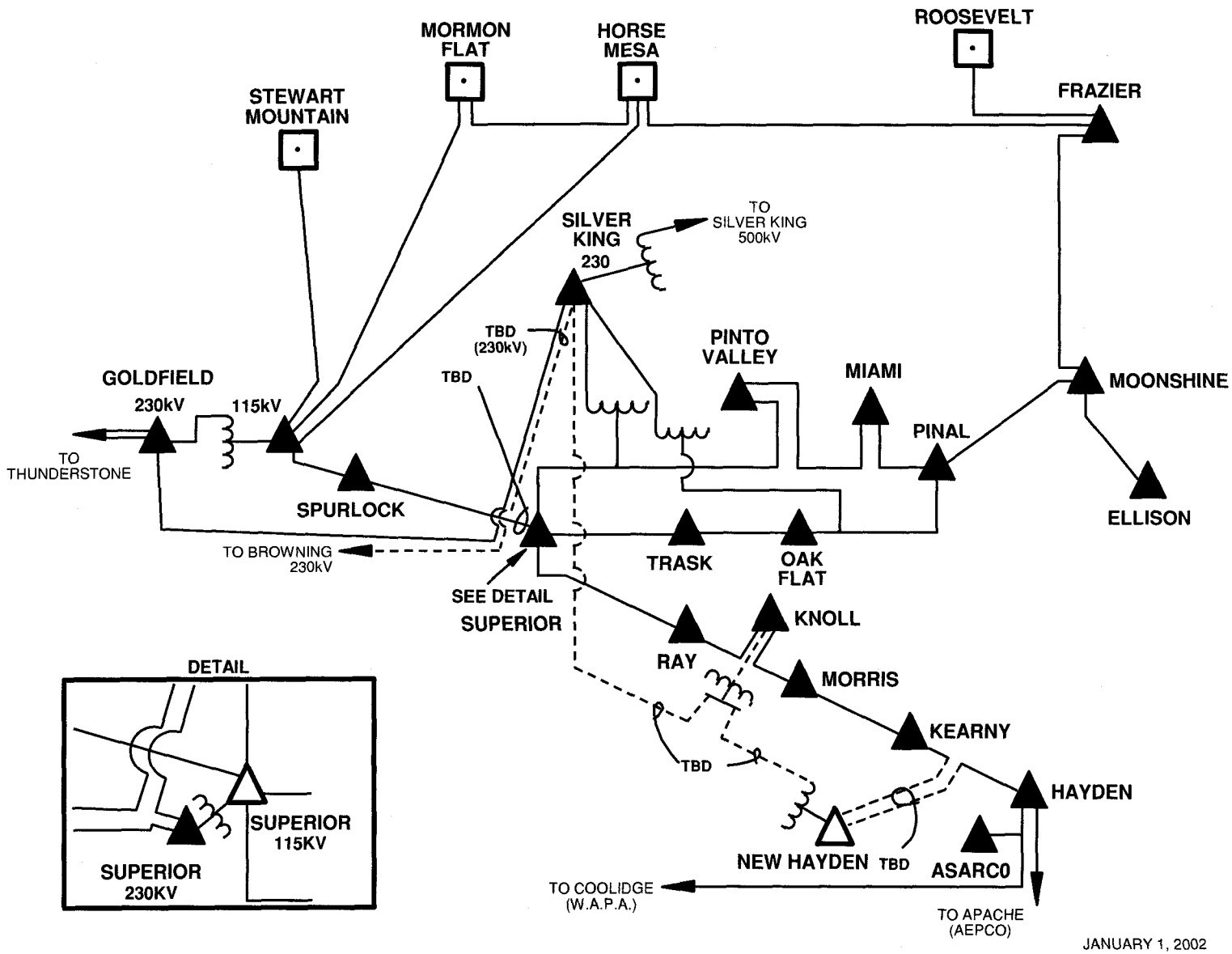

JANUARY 1, 2002

FUTURE SUBSTATION

EXISTING SUBSTATION

GENERATING STATION

EXISTING LINE

FUTURE LINE

SALT RIVER PROJECT EASTERN MINING AREA SYSTEM

ATTACHMENT D

1/31/02 000705-4