ORIGINAL

0000039978

RECEIVED

2006 JAN 26 P 4: 04

AZ CORP COMMISSION
DOCUMENT CONTROL

John S. Gay
1241 W. Calle De La Plaza,
Sahuarita, Az. 85629
January 25, 2006
Phone (520) 625 - 3327

47

W-01583A-04-0178
W-01583A-05-0326
W-01583A-05-0340

INDEX FOR INTERVENOR JOHN GAY'S LAS QUINTAS SERENAS WATER CO. PAPERS

1. 8 Page letter with comments on the L.Q.S. system & various exhibits.
2. Exhibit G - 1 Before the Az. Corp. Comm. -- PROCEDURAL ORDER
3. " G - 2 Steve Gay, Operator/Manager 12/29/05 report.
4. " G - 3 Resolved ... reopen rate case.....Further Resolved.....
5. " G - 4 John Gay 2/20/05 Comparison of costs of Arsenic units at each well with combined of 6 & 7 at Well 6
6. " G - 5 Miller Brooks 7/1/05 Plans, Costs, etc for Arsenic treatment at each well. (Full Set)
7. " G - 6 John Gay 1/20/06 letter to other Directors & Interested parties -- need $180,000 savings per year to make combined at #6 as cost effective as arsenic units at each well.
8. " G - 7 John Gay 9/14/05 letter to Judge Rodda asking for Intervention to try to stop out of control spending by L.Q.S. Board of Directors majority.
9. " G - 8 John Gay 1/9/06 letter to other Directors & Operation people --Money problems, When Manager leaves, New well possibility, etc.
10. " G - 9 John Gay 4/18/05 letter to Mike Redmond, PDEQ Minimun storage, $600,000 Arsenic vs $1,789,375
11. " G - 10 3 pages Ron Kozoman's exhibits to show 219.90% increase in rates for some customers.
12. " G - 11 John Gay trying to use Westland's figures to compare costs of Arsenic units at each well

INDEX (CONTINUED)

with combined of 6 & 7 at well 6

13. Exhibit G - 12 Manager showing L.Q.S. savings of $40,200 per year because we use Elec. Interrupt Service (Watch what do in future so do not loose this.)

1-25-06 Doc

1241 W. Calle De La Plaza
Sahuarita, Az. 85629
January 22, 2006
Phone (520) 625 - 3327

Arizona Corporation Commission
Docket Control ?
400 W. Congress, Tucson, Az.
(I do not know how to address this letter. I phoned 628-6550 on Jan. 12, 2006 and Reg Lopez told me to deliver to Suite 218 in the North Building and he would distribuite as required.)

INTERVENOR'S PAPERS & DOCUMENTS FOR DOCKET NO. W-0158A-04-0178, W-0158A-05-0326, and W-01583A-05-0340

1. In my Exhibit G-1 (Before the Az. Corp. Comm. --PROCEDURAL ORDER) it states near the bottom of Page 3 "The exact type of recovery mechanism has not yet been defined." I therefore believe that if I can show the Commission that my idea has merrit it may be approved.

2. On the Decision 67455 that the Commission ordered to be effective January 1, 2005 the Commission was very definite on what and when L.Q.S. had to do about arsenic and we were to be in compliance on January 23, 2006. I have never had any information in writing that this date was being extended. In fact, I even heard that there might be fines, etc. if we were not in compliance. My voting as a Director of L.Q.S. was based on this written order.

In Exhibit G-2 (Steve Gay, Operator/Manager 12/29/05 report to the Directors) under 4. Arsenic ADEQ time frame: Steve says he talked to John Calkins (I don't know his title, or whom he is with), and at our Directors meeting of 1-19-06 Steve spoke about our extension time for being in compliance. He states, "For LQS it will mean that in the 1st qtr. of 2007 ADEQ will have our Point of Entry's (POE'S) sampled for arsenic ....." So I have some hear-say information now, but I still do not have anything written by the Commission saying we have an extension in time for compliance. So again, this lack of written orders from the Commission has influenced my voting as a Director.

3. In my Exhibit G-3 (Resolved ... reopen rate case, Be It Further Resolved ..... long-term indebtedness .....etc.) on April 27, 2005 I voted as a Director for this resolution. All five resolutions were in general terms to get the ball rolling with the Commission, and nothing tied us down to a particular plan so I was in favor of the 5 resolutions.

ARSENIC TREATMENT PROPOSALS

A. Phelps Dodge paid Malcolm Pirnie and they came up with four alternatives which ranged in capital costs from $1,080,000 to $1,280,000 with annual operation and maintenance costs from $166,000 to $318,000. On two of the alternatives they assumed turnkey media replacement of twice a year. They did mention in three of the alternatives, "Blending will assist in controlling sulfate, it it becomes an issue." Sulfates are an issue in the water company that adjoins us on the south so I do not know if this is why Phelps Dodge had this report done. In any case, they weren't considered partly because their O & M annual costs were so high. (In Commission's Docket W-0158A-04-0178 and in Decision 67455 of Jan. 1, 2005 "Staff has calculated a preliminary estimate of arsenic removal costs for LQS's system using ADEQ Arsenic Master Plan ("AMP"). Staff's estimate includes $186,992 in capital costs, $124,122 for annual operations and maintenance costs and $28,049 in engineering costs. However, we make no finding in this Decision as to the reasonableness of Staff's estimates or any costs that may be incurred by LQS to meet the new arsenic MCLs.")

B. Steve Gay went to a lot of meetings on the subject, talked to sales people and engineers, and on Sept. 27,2004 Kaycee, Steve, and I went to Mesa to a big show where the vaious companies had displays and engineers to explain and answer questions. L.Q.S. even joined an organization which was working on the subject.

c. On January 10, 2005 we signed a contract with Westland Resources to do engineering to assist with the arsenic removal.

D My notes show I received on 2-16-05 Westland's February 2005 report "LAS QUINTAS WATER COMPANY DRAFT WATER SYSTEM MASTER PLAN."

My G-4 Exhibit goes into great detail showing costs of a arsenic system with units at each well for **$580,000** over all, compared to Westland's central arsenic plan costing **$1,279,000** or **$1,598,750.** You will note I sent copies of this on February 20, 2005 to Westland, Mike Wood, and Rohn Householder. I have never received any phone calls back questioning these facts, or anything in writing. As I recall, (and Steve Gay also recalls it, and I do not know about Kaycee) at a Directors meeting after they had copies of G-4 Rohn said, "Oh, that is just the salesman talking." It is not important whether Rohn said anything, but I thought he did, so my wife and I hired the engineering firm Miller Brooks Environmental, Inc. to see what they might come up with.

On June 7, 2005 I sent Miller Brooks an advance of $1,000 and signed the paper work for them to do the engineering for Exhibit G-5. We paid them over $7,000 total and I think they did a fine job. (Some years ago I worked for the U.S. Navy doing engineering upgrading mostly on submarines. I would pull the plans of the particular submarine, make my drawings and list of materials and when this was approved the material would be purchased. All this time the submarine could be at sea half the world away. The submarine was scheduled into the San Francisco Naval Shipyard for the modifications after all plans were done and material purchased and in the Shipyard's warehouse. So with that experience I did the same sort of thing with Miller Brooks. I took photos and made drawings so they did not have to come from Phoeniox to LQS property.) Miller Brooks Environmantal's design was, I felt, far superior to, and much more practical than Westland's design, and could be put in for about one half of the cost.

One notes when compring Exhibits G-4 and G-5 that on Well #7 both are using Model EAS-3008 but the price quotd on G-4 was only good until 22 June 04, and on G-5 the price was more and good until 13 May 05. The G-4 price was for $229,000 and the G-5 for $243,000. That is one of the reasons I had $580,000 for G-4 and Miller Brooks has $712,000 for G-5.

COST COMPARISON BETWEEN CENTRAL UNIT AND AT EACH WELL

5. Applicant's Exhibit A-1 which is a March 2005 report shows on Appendix A costs of $1,789,375. In Applicant's Exhibit A-13 which is a September 2005 report I can not find any costs. Exhibit 2 in Applicant's

Exhibit A-1 is the plans for the central unit at Well #6. Appendix C in Applicant's Exhibit A-13 is again the #6 well site layout. Between the two there are lots of changes and Steve Gay told me the other day that there are major changes in the plans that are now comming out from the ones shown in Exhibit A-13. From what I see, many of these changes are going to make the cost go up so there is a good chance now that the $1,789,375 figure of 3/24/05 will not cover what Westland has in their plans now.

6. In any case, it doesn't reaally matter what the final Westland costs, and the Miller Brooks costs are, there is about $1,000,000 difference between the two. This is the reason I wrote the Exhibit G-6 because if I can get either of the other two Directors to agree with me L.Q.S. will have saved about $1,000,000 and have a more reliable system.

7. In the second paragraph on the second page in my September 14th letter to Judge Rodda (Exhibit G-7) I partially explain why I want to be an intervenor as soon as possible because the manager and other two Directors are spending money to implement the Westland proposal because they think it is in effect. In my Exhibit G-8 in paragraph #11 I explain to the other two Directors that we have had to sell $94,917 of our investments this year just to operate.

If I am correct in my paragraph #1 in this letter, backed up by my Exhibit G-1 we are wasting a lot of money if the Corporation Commission decides that Westland's central unit is too costly.

8. My letter of April 18,2005 to Mike Redmond, Pima County Dept. of Environmental Quailty (Exhibit G-9) was given to Mr Redmond when I met him at his office at 8 AM on April 19,2005. Paragraph #7 and #8 deal with minimum required storage and he figured it out right then and said we were o.k. Later that day I handed copies of this letter to Steve Gay and Larry Robertson and mailed Rohn's and Mike's copies on April 20th. When I checked with Rohn and Mike (a few days later ?) all they wanted to know was, "Did you get it in writing" My understanding is that the ADEQ is the one that actually checks our system for compliance, not the Corporation Commission, so here is a man that a few years earlier I was along with him when he checked a new L.Q.S. subdivision pipe installation to see if it was o.k., and I am supposed to ask him to sign a paper to what he told me.

Mr Redmond and I talked about Westland's $1,789,375 system and he agreed with me having seen our system that the $600,000 systen would be more reliable, and as far as they were concerned, we could change engineers at any time.

COMPARING CUSTOMERS MONTHLY COSTS FOR WATER

9. I wanted to refer to Ron Kozoman's figures and use his Exhibit A-8 or A-9 but frankly I was not smart enough so I have copied three of his pages and I will call them my Exhibit G-10. The bottom area of page 7 is the heading for the material on page 8. He shows 5/8 x 3/4 meters having a Monthly Minimum of $10.00 and then adding the ACRM Charge of $21.99 gives a total of $31.99. On the next page (Exhibit Schedule H-3 Page 1 Witness: Kozoman) he shows this to be a 219.90% increase for all people having this size meter. He is figuring this on a proposed debt of $1,648,750 which I believe would be a $9.34 rate increase if our arsenic removal system only costs $700,000. I would expect many of our customers to complain loudly when they are charged an additional $21.99 per month and a more reliable system could have been built where their additional charge would have been $9.34.

IS A CENTRAL ARSENIC TREATMENT LOCATION MOST EFFICENT ?

10. Page 1 of Exhibit G - 11 is the written motion I made at the April 27, 2005 meeting of the Board of Directors. The motion was approved 3 to 0. Page 2 is a copy of Page 9 of Applicant's Exhibit A-1. They should be identical.

Page 3 is Westland's "Combined Arsenic Treatment at Well Site 6". The subtotal of this is $1,431,500.

Page 4 is Westland's "Individual Arsenic Treatment at Each Well." The subtotal of this is $1,337,000. They forgot to add the 200 gpm Adsorption Treatment System for #5 which they had on my page 3 as $100,000 so when I add this the subtotal is $1,437,000. So using their figures it is more expensive to treat at Each Well.

I do not agree with Westland so I have taken my Page 3 and blanked out the Unit, Quantity and Unit price columns so I can show my figures and I will give reasons below. This will be my page 5. Page 6 explains with #5 well exactly what I have been trying to explain we should do at the #6 well and #7 well. When you don't have to put in 100,000 gal. to 400,000 gal tanks and new pumping units and new elec generating units there is enough space at each well without moving fencing and the existing equipment. The $243,000 and the $188,000 I took from my Exhibit G-5 and these prices were good until 13 May 2005.

We Directors were told by Steve Gay that Westland would not make a comparison sheet like we asked for. Steve said that they said they had already done this. Steve gave me on May 2nd what I call Page 4. This was so absurd that I would not even consider it. My reasons were

1. They forgot to include #5 well for $100,000.
2. They had a 150,000 gallon reservoir at #7 well for $140,000.
3. They had a 100,000 gallon reservoir at #6 well for $95,000.

On the two reservoirs I could understand that they did not understand what was going on, but my page 6 shows that someone at Westland did understand because they wrote nearly an entire page saying #5 will not require any modifications to pump directly into the distribution system.

This #10 subject on the motion for information I have covered in detail because I have the feeling that Mike Wood and Rohn Householder either do not understand the L.Q.S. water system, or they do not care. (I am happy to hear that Rohn and a couple of other people will tour the system in a few days. I may be wrong, but I do not think Rohn has ever been to #6 well where this central unit is proposed, even though the proposal which he continuouly backs will cost over $1,000,000.)

11. **Interrupt Service (IS)** I am including as Exhibit G-12 a page Steve Gay, our manager, wrote some time ago. He shows that L.Q.S. saves over $40,200 per year by using interrupt service. If we go with Westland's proposal we need to watch carefully, or L.Q.S.'s expenses in the future will be $40K per year more. Steve has been manager for about 20 years and it is his dedication and experience that makes this system work. Steve gave us notice several months ago that he is leaving on March 31,2006. He has tried, and I have tried, to get information from the two Phelps Dodge Directors as to what they plan to do when Steve leaves, and at the Director's meeting last week I asked point blank and they said in a week, or two, we might have some information. The only other L.Q.S. field employee is Gary Hatcher who is leaving at the same time and we need to get somone now to be trained by Gary.

NEW ORLEANS WATER TANK LOCATION

12. I assume that qualified engineers stamped approval to build levees and construct homes that were destroyed by water a few months ago in New Orleans. As I hear it, people in the hard -hit areas had no clean drinking water and could not flush toilets. Applicant's Exhibits A-1 and A-13 both show in their proposals 400,000 Gallon Reservoirs at #6 well

location. Westland shows the cost for this reservoir to be $325,000. If the L.Q.S. franchise area had a major disaster we probably could fill gallon jugs of water from the water in this tank, but would be no help in flushing toilets in any homes left.

We have two storage tanks on the old Anamax property at an elevation to give proper water pressure to our franchise area. A few years ago we got a second easement where the tanks are, so there is now enough room to build a large tank where the north small tank is now. Near the bottom of page 1 on Exhibit G-2 is a comment that our lawyer does not like the wording of the easement.

On January 12th I phoned Harold Metz of Twin Buttes Properties, who now own the property and I explained our situation and he said he would check with their lawyer, I think in Cleveland. At the L.Q.S. Director's meeting last week we instructed our Manager, Steve Gay, to get in writing what our lawyer didn't like so we could correct the problem, if there is one. I checked with Steve yesterday and he had nothing from our lawyer as he is on vacation. Today, January 24th, I phoned Harold Metz with that information. He suggested we have our lawyer write up what he likes and present it to the Twin Buttes Properties people.

Twin Buttes Properties owns about 77 acres of undeveloped property in the L.Q.S. franchise area, so I would think they would like L.Q.S. to operate smoothly.

CONCLUSION

At our Director's Board meeting on January 19, 2006 we received the Monthly Financial reports for September 2005. With no October, November, and December financial reports available, and then in my Exhibit G-8 saying on#11 that we had used **$94,917** of our savings in less than one year one can see how difficult it is for us three Directors to make sensible decisions.

In our Decision No. 67455 we asked for a return of 30.97% and this was all Kent Alme's idea who was a Director then. Seeing how the Commission wrote this up in the Decision I have always wondered if they felt our organization was like Enron, with crooks running it, and gave us a bad time and made it necessary to come right back for another rate increase before we went broke. Therefore, when I have seen our offering a proposal costing about $1,000,000 more than I feel will be necessary for a more reliable system, I felt I must speak up and be an intervenor. Assuming that our lawyer is used to answer most of my intervenor items (At the 1/19/06 meeting neither Kaycee who types the checks or Steve who signs them could tell us what the lawyer's wages are) and not Kaycee at

$16.37 per hour, or Steve at $27.80 per hour, these proceedings will cost L.Q.S. (and our customers) lots of money .

If I can just get one of the two Phelps Dodge Directors to see the advantages of saving $1,000,000 and vote with me, everything will be over. If they have strong beliefs and will explain them to me, and they make sense, then I will vote with them and L.Q.S. will not have to spend all of this money on lawyer's fees.

Yours truly

John S. Gay

John S. Gay

1-22-06 Doc

Exhibit G-1

BEFORE THE ARIZONA CORPORATION COMMISSION

COMMISSIONERS

JEFF HATCH-MILLER, Chairman
WILLIAM A. MUNDELL
MARC SPITZER
MIKE GLEASON
KRISTIN K. MAYES

Rec'd Nov 17, 05

IN THE MATTER OF THE APPLICATION OF LAS QUINTAS SERENAS WATER CO. FOR A RATE INCREASE.	DOCKET NO. W-01583A-04-0178
IN THE MATTER OF THE APPLICATION OF LAS QUINTAS SERENAS WATER CO. FOR AUTHORITY TO INCUR LONG-TERM INDEBTEDNESS TO FINANCE WATER SYSTEM IMPROVEMENTS AND ASSURE COMPLIANCE WITH NEW ARSENIC RULES.	DOCKET NO. W-01583A-05-0326
IN THE MATTER OF THE APPLICATION OF LAS QUINTAS SERENAS WATER CO. FOR AN OPINION AND ORDER TO (i) RE-OPEN THE RECORD IN A RECENT RATE CASE SO AS TO CONSIDER EVIDENCE IN SUPPORT OF AN ARSENIC COST RECOVERY MECHANISM, AND (ii) MODIFY RATE CASE DECISION IN ORDER TO ADD AN ARSENIC COST RECOVERY MECHANISM AS AN AUTHORIZED RATE AND CHARGE.	DOCKET NO. W-01583A-05-0340 **PROCEDURAL ORDER**

BY THE COMMISSION:

By Procedural Order dated August 18, 2005, upon request of the parties, the Arizona Corporation Commission ("Commission") suspended the procedural schedule that had been set in the above captioned matter.

On November 15, 2005, Commission Utilities Division Staff ("Staff") and Las Quintas Serenas Water Company ("Las Qunitas" or "Company") jointly proposed the following procedural schedule:

Las Qunitas files direct testimony and exhibits	December 7, 2005
Staff/Intervenors file direct testimony and exhibits	January 25, 2006
Las Quintas files rebuttal testimony and exhibits	February 21, 2006

IT IS THEREFORE ORDERED that a **hearing** in the consolidated matters shall commence on **March 1, 2006, at 10:00 a.m.**, or as soon thereafter as is practical, at the Commission's offices, **Room 222,** 400 West Congress, Tucson, Arizona.

IT IS FURTHER ORDERED that direct testimony and associated exhibits to be presented at hearing by Las Qunitas shall be reduced to writing and filed on or before **December 7, 2005**.

IT IS FURTHER ORDERED that testimony and associated exhibits to be presented at hearing by Staff or any Intervenors shall be reduced to writing and filed on or before **January 25, 2006.**

IT IS FURTHER ORDERED that any rebuttal testimony and associated exhibits to be presented at hearing by Las Quintas shall be reduced to writing and filed on or before **February 21, 2006**.

IT IS FURTHER ORDERED that any surrebuttal testimony and any rejoinder testimony shall be presented orally at the hearing.

IT IS FURTHER ORDERED that any objections to any testimony or exhibits that have been prefiled as of February 21, 2006, shall be made on or before February 27, 2006.

IT IS FURTHER ORDERED that all testimony filed shall include a table of contents that lists the issues discussed.

IT IS FURTHER ORDERED that any substantive corrections, revisions, or supplements to pre-filed testimony shall be reduced to writing and filed no later than five days before the witness is scheduled to testify.

IT IS FURTHER ORDERED that the parties shall prepare a brief, written summary of the pre-filed testimony of each of their witnesses and shall file each summary by 3:00 p.m. on February 27, 2006.

IT IS FURTHER ORDERED that copies of summaries shall be served upon the Presiding Officer, the Commissioners, and the Commissioners' aides, as well as the parties of record.

IT IS FURTHER ORDERED that intervention shall be in accordance with A.A.C. R14-3-105, except that all motions to intervene must be filed on or before **February 14, 2006**.

IT IS FURTHER ORDERED that discovery shall be as permitted by law and the rules and

regulations of the Commission, except that: until February 1, 2006, any objection to discovery requests shall be made within 7 days[1] of receipt and responses to discovery requests shall be made within 10 days of receipt; thereafter, objections to discovery requests shall be made within 5 days and responses shall be made in 7 days; the response time may be extended by mutual agreement of the parties involved if the request requires an extensive compilation effort.

IT IS FURTHER ORDERED that, in the alternative to filing a written motion to compel discovery, any party seeking discovery may telephonically contact the Commission's Hearing Division to request a date for a procedural hearing to resolve the discovery dispute; that upon such a request, a procedural hearing will be convened as soon as practicable; and that the party making such a request shall forthwith contact all other parties to advise them of the hearing date and shall at the hearing provide a statement confirming that the other parties were contacted.[2]

IT IS FURTHER ORDERED that any responses to motions shall be filed within five days of the filing date of the motion.

IT IS FURTHER ORDERED that any replies shall be filed within five days of the filing date of the response.

IT IS FURTHER ORDERED that public notice of the hearing in this matter shall be provided in the following form and style, with the heading in no less than 12 point type and the body in no less than 10 point type:

PUBLIC NOTICE OF HEARING ON THE APPLICATION OF LAS QUINTAS SERENAS WATER COMPANY FOR AUTHORITY TO IMPLEMENT AN ARSENIC COST RECOVERY MECHANISM Docket No. W-01583A-04-0178 et al.

On May 15, 2005, Las Quintas Serenas Water Co. ("Company") filed with the Arizona Corporation Commission ("Commission") an application for authority to implement a charge to recover the cost of new water treatment facilities needed to comply with new federal government drinking water standards. The new federal standards, which become effective January 23, 2006, reduce the maximum level of arsenic allowed in drinking water from 50 to 10 parts per billion. On May 2, 2005, the Company filed a Finance Application seeking authority to incur long-term debt in the amount of $1,648,750 associated with the capital improvements needed to treat arsenic. The exact type of recovery mechanism has not yet been defined. If approved by the Commission, an additional charge to allow for recovery of the costs associated

[1] "Days" means calendar days.

[2] The parties are encouraged to attempt to settle discovery disputes through informal, good-faith negotiations before seeking Commission resolution of the controversy.

with arsenic treatment would be effective in the second quarter of 2006, and would increase the average monthly residential bill by an as yet undetermined amount. Copies of the Company's application and other filings are available for public inspection during regular business hours at the Company's office **[COMPANY INSERT ADDRESS AND CONTACT INFORMATION HERE]** and at the Commission's Docket Control Center, 1200 West Washington, Phoenix, Arizona 85007 or its Tucson office 400 W. Congress, Suite 218, Tucson, Arizona 85701.

The Commission will hold a public hearing on this matter beginning **March 1, 2006 at 10:00 a.m.** at the Commission's offices, Room 222, 400 West Congress Street, Tucson, Arizona. Public comments will be taken on the first day of the hearing.

The law provides for an open public hearing at which, under appropriate circumstances, interested parties may intervene. Intervention shall be permitted to any person entitled by law to intervene and having a direct and substantial interest in the matter. Persons desiring to intervene must file a written motion to intervene with the Commission no later than **February 14, 2006**. The motion to intervene must be sent to all parties of record, and shall contain the following:

1. The name, address, and telephone number of the proposed intervenor and of any entity upon whom service of documents is to be made if different from the intervenor;

2. A short statement of the proposed intervenor's interest in the proceeding; and

3. A statement certifying that a copy of the motion to intervene has been mailed to all parties of record in the proceeding.

The granting of intervention, among other things, entitles a party to present sworn evidence at the hearing and to cross-examine other witnesses. However, failure to intervene will not preclude any interested person or entity from appearing at the hearing and providing public comment or from filing written comments in the record of the case. You will not receive any further notice of this proceeding unless you request it.

If you have any questions about this application, or want further information on intervention, you may contact the Consumer Services Section of the Commission at 1200 W. Washington Street, Phoenix, Arizona 85007 or call 1-800-222-7000.

The Commission does not discriminate on the basis of disability in admission to its public meetings. Persons with a disability may request a reasonable accommodation such as a sign language interpreter, as well as request this document in an alternative format, by contacting Linda Hogan, ADA Coordinator, voice phone number 602/542-3931, E-mail LHogan@azcc.gov. Requests should be made as early as possible to allow time to arrange the accommodation.

IT IS FURTHER ORDERED that Las Quintas shall cause a copy of the above-ordered notice to be published in a newspaper of general circulation in its service area no later than **December 21, 2005**, and shall file certification of publication as soon as practicable after publication has been completed.

IT IS FURTHER ORDERED that Las Quintas shall mail a copy of the above-ordered notice to each of its customers by First Class United States mail no later than **December 21, 2005**; and shall file certification of mailing as soon as practicable after mailing has been completed.

IT IS FURTHER ORDERED that notice shall be deemed complete upon publication and mailing of same, notwithstanding the failure of an individual to read the notice.

IT IS FURTHER ORDERED that the Ex Parte Rule (A.A.C. R14-3-113 - Unauthorized Communications) applies to this proceeding and shall remain in effect until the Commission's Decision in this matter is final and non-appealable.

IT IS FURTHER ORDERED that the time periods specified herein shall not be extended pursuant to Rule 6(a) or (e) of the Rules of Civil Procedure.

IT IS FURTHER ORDERED that the Presiding Officer may rescind, alter, amend, or waive any portion of this Procedural Order either by subsequent Procedural Order or by ruling at hearing.

DATED this 16th day of November, 2005.

JANE L. RODDA
ADMINISTRATIVE LAW JUDGE

Copies of the foregoing mailed
this 16th day of November, 2005 to:

Mr. Steve Gay
General Manager/Operator
Las Quintas Serenas Water Company
16965 Camino De Las Quintas
P.O. Box 68
Sahuarita, AZ 85629

Lawrence V. Robertson Jr
Munger Chadwick PLC
333 N Wilmot Suite 300
Tucson, AZ 85711-2634

John S. Gay
1241 W. Calle De La Plaz
Sahuarita, Arizona 85629

Christopher Kempley, Chief Counsel
Jason Gellman
Legal Division
ARIZONA CORPORATION COMMISSION
1200 W. Washington Street
Phoenix, Arizona 85007

Ernest Johnson, Director
Utilities Division
ARIZONA CORPORATION COMMISSION
1200 W. Washington Street
Phoenix, Arizona 85007

Arizona Reporting Service, Inc.
2627 N. Third Street, Suite Three
Phoenix, Arizona 85004-1103

By: Juanita Gomez
Juanita Gomez
Secretary to Jane L. Rodda

LAS QUINTAS SERENAS WATER CO.

P. O. BOX 68
SAHUARITA, AZ 85629
(520) 625-8040
648-3520 Fax

1-19-06 Rec'd. JLS

Exhibit G-2

Does the Board want a meeting in Dec. 2005, or January 2006?

#1.LQS Viability:

I am extremely concerned that LQS will be getting into a financial situation where it will not be able to operate successfully.

ACC coordination (ACRM)	Expended to date	Outstanding
Legal	$ 19,566.40	$ 7,882.23
Account	$ 1,720.00	$ 00
ACC specialty Accountant	$ 13,313.19	$ 00
WestLand Engineering	$ 4,110.46	$ 4,794.25
LQS Office costs	$ 466.44	$ 298.82
	$ 39,176.47	$ 12,975.30

These costs are all related to acquiring ACC authority to accrue debt and are not considered a part of the Arsenic Recovery Mechanism (ACRM). More money is expected to be spent throughout this procedure. LQS will not have an opportunity to recover these costs until the next rate case at which time the ACC will determine what part of these costs will be allowed (if any) in the company's future rates.

(Legal and accounting have been very generous to LQS on what hours have been billed to the company).

Upsizing 250,000 gallon arsenic storage tank to 400,000 gallons:
WestLand is saying that ¼ of the cost of a 400,000 gallon tank would be $ 140,000 which I think LQS cannot afford the luxury of at this time. It is highly probable that the ACC will not allow LQS to recoup the cost of the additional storage, as they may rule it not useful, unless the engineers can prove that it enhances the plant.

Larry Robertson looked at the LQS easement for the storage tanks on # 3 tailings and said that at the discretion of the Grantor, LQS could be moved off at any time at LQS's expense and that the Grantor does not need to give LQS another easement. Larry also suggests that LQS not show this easement to the ACC as they may remove or subtract a portion of the current rate base for this storage facility.

If LQS should have # 7 well go down, # 5 well cave in and only # 6 well operating at the new arsenic plant capacity of 550 GPM natural gas and have only 250,000 gallons storage with boosters + 90,000 gal storage on # 3 tailings, then this

would give LQS just enough water for one normal day during the hottest month average. This is what the minimum storage required by ADEQ and PDEQ is. This also includes the new 239 homes of Santa Cruz Meadows and other homes recently built. LQS could get ANAMAX Park to reduce watering and probably keep the customers all in water for an extended time. (Pages 7& 8 attached of Nov. 2003 Managers report)

I am concerned that LQS will install a $ 100,000 + dollar arsenic treatment plant at # 5 well, then # 5 well will not be functional for what ever reason and then the ACC will not allow LQS to charge the customers for the remaining costs for the plant and equipment because it is not used or useful. The expected life and payback from the ACC is 20 years according to Larry. If the arsenic treatment plant is not being used then the customers should not be responsible to pay for it. Larry says "roll of the dice."

I do not know if there is a reasonable possibility of using the proposed cost of # 5 well arsenic treatment plant to either increase pumping capacity of # 6 well or more storage to offset # 5 well pumping (200 GPM X 60 minutes X 24 hours = 288,000 gallons per day)

6 well is currently overdue for a major overhaul, of about $ 35,000 dollars. I am waiting until after the arsenic plant is installed, so the new bowls would be set up for the new pump curve needed to operate at lower pressure and larger volume for the arsenic treatment plant.

LQS has approximately **$ 220,550** remaining value in stocks & mutual funds.
LQS sold **$ 28,257** of stock to cover expenses in Nov. 2005

Johnson & Johnson	$ 18,504.21
Intel	$ 4,945.42
SBC Communications	$ 4,808.36

2. Kaycee's wages to be re-evaluated:

3. Gary Hatcher has resigned with an effective date no later then March 31, 2006. He is very willing to train his replacement on water meter reading and sequencing.

Does the Board want a fulltime person in this position?
A person on call all the time?
A person with mechanical, water or electrical background?
What price range is the Board willing to pay, and is part time work and call out worth more per hour or less per hour than fulltime employees.
What is being paid in the water industry, ($ 14 for a water meter reader) or like the day labors ($ 8 per hr.) or skill based pay compensation (start $12, and possibly achieve $ 25 per hr. as in Tucson Water)

4. Arsenic ADEQ time frame:

I talked to John Calkins (1-800-2345677 ext 771-4617) on 10/12/05 about the extension time for being in compliance for Arsenic. For LQS it will mean that in the 1st qtr of 2007 ADEQ will have our Point of Entry's (POE's) sampled for arsenic through the MAP program. If the samples are less than 10 PPB the water company is in compliance and the next samples will be taken in 2010. If the samples are 10 PPB or higher in the 1st Qtr in 2007, then quarterly sampling will begin for the rest of the year, and if the average yearly samples are less than 10 PPB, then the water company will be in compliance and MAP will sample LQS again in 2010.

This has been confirmed by the ADEQ web site.

LQS received an EPA Email saying that the EPA has now made an "arsenic Virtual Trade Show" site with training scheduled on how to use the site on January 10, 2006.

5. ACC progress:

John Gay is now signed up as an intervener in the pending applications for the arsenic recovery mechanism and the authority to approve debt.

LQS's Lawyer requests that intervener's requests for information be submitted in writing, so the company will have documentation of what is provided.

After all kinds of data requests and phone conferences, the ACC and LQS are on track for the procedural hearing schedule as per Judge Rodda .

Westland progress:

The surveying and alignment for the water line from # 7 well to # 6 well is completed.

A Hydrologist is working through WestLand Resources on whether the # 6 well site needs to be raised to keep it out of the sand wash and which sand washes need to be bored under in order to keep the time and cost of permitting down.

6. System operation:

The radio SCADA system has been having problems for some time. First communication from # 6 well to the office was sporadically not working. After changing antennas, using the tank SCADA as a repeater and lots of testing, the # 6 well radio was changed out for a new one. # 6 SCADA works great now, but twice now the total SCADA radio system seemed jammed with nothing working. The radio manufacture troubleshooting technicians think it could be one of the radios jamming in send mode and locking the whole band. This would be like using a CB radio and having the mike keyed so only interference could be heard. The factory representatives say that this has happened a few times out of thousands of radios in operation.

We are now waiting for the system to jam again so each radio can be physically checked by looking at its lights and seeing what is happening.

7. LaCanada & Santa Cruz Meadows:

As far as LQS is concerned, La Canada is completed except the raising of the valve boxes and completing the modifications on the maps. (as built)

LQS has installed two new 1 ½" water meters on La Canada for landscape which the Town will eventually be paying the water bill on.

Santa Cruz Meadows is actually being built. Brushing started the first week of December with starting the water line tie-ins on Dec. 12, 2005. This is great and will help LQS by looping in # 6 & 7 wells into the system and allowing much greater flows with less pressure loss.

8. County bi-yearly inspection:

PDEQ inspected the water system on 12/7/05 and found no out of compliance issues.

9. Nancy Freeman:

She is still writing articles in the Green Valley paper about polluted water, but LQS is receiving few comments from our customers about her articles.

Nancy is organizing a meeting at the U of A on January 23, 2006 for the purpose of discussing the possibility of how to save the aquifer by recharging storm water. John & Steve are planning on going.

10. Town study of "whether the town wants to get into the water business."

The Sahuarita Sun Oct. 30, 2005 had an article about the town hiring a consultant to look into the prospects of supplying roads, sewer, water and schools in the area.

Mike Lytle, Manager for Rancho Sahuarita Water asked if LQS was for sale as possibly they would be interested in buying.

11. Grumpy customers:

Our family is still getting people walking into the house looking for the water company or calling our house phone number for the water company. This is happening less and less.

However, Sunday Nov. 20, 2005 I was woken up by someone ringing my door bell, wanting their water turned back on at the standpipe. (They forgot to pay their bill) I charged LQS $ 42.68 for 1 ½ hour straight time to turn the water back on and also check the office computer for system operations. The ACC has given LQS $ 20 dollars for a

turn on and $30 dollars for after hour's (week days before 8 A. M. or after 5 P. M. and weekends) at customers request. At this time LQS is only charging the $ 20 re-establishment fee to all customers regardless of time frame, trying to keep customers happier. If the Board wants, LQS can charge a $ 30 dollar fee for after hours and weekend re-establishment (by customer request) as per the current rate tariff. At this time only one board member lives in the LQS franchise and the other Board members are not known and are not neighbors of mad customers who vent themselves on the phone, in the grocery stores, at the bank, or during public events.

Sahuarita Post office is now sending some LQS mail to Phoenix, to be sorted and then sent back to Sahuarita. The delivery time for a piece of mail sent from Sahuarita to get to LQS post office box varies from 1 day to 3 days with the record being received in 5 weeks. When LQS turns customers off for lack of payment and the customer complains that the check is in the mail, LQS accepts their claim as valid, turns the water on and if the check is soon delivered with a post mark date to confirm their claim, the $ 20 dollar reconnect fee is waived.

LQS is getting lots more grumpy customers in the office and in the field.

12. Fire Sprinklers:
Robert Brown from Unity Church:

Mr. Brown keeps calling and coming in saying that his architect says that the water company requires that they have a 4" water line for their fire sprinklers in the building that they are going to build. He has checked with Community water and says that they allow some special deal that a fire sprinkler line does not need to be paid for and that Community water installs a small meter to check for leaks but no charge is applied for the fire sprinklers.

There was a complaint filed with the ACC by Mr. Brown about what LQS says that LQS has to charge for a 4" meter under ACC rules. (LQS first written complaint) Richard Martinez from the ACC is who is on the case, says that LQS can only do at this time what is being done, but he suggests that LQS consider asking ACC for a fire sprinkler tariff similar to what Community Water has. Richard also says that there is some code that says that all commercial buildings must have a 4" water service line for sprinklers.

Norris West of Community Water (625-8409) says that they charge the applicant what it costs Community Water to install the fire sprinkler system to their main and then there is a double check valve with a meter to register water leaks. The ACC have given Community Water a monthly tariff for each fire sprinkler size.

Mike Lytle of Rancho Sahuarita (399-1105) says that for homes over 3,600 sq. ft. a ¾" meter is installed and the customer pays the standard tariff for this meter.

The Town requires that fire sprinklers be installed in all new homes of 3,600 sq. ft. or larger.

For new subdivisions the Town is requiring that LQS install 1 ¼ meter service lines for "U" branch services instead of the normal 1" service line. This is to support sprinklers on ¾" meters.

This scenario comes up about once a year for new commercial buildings and about twice a year for large homes with sprinklers installed.

Steve Gay
Operator/Manager
12/29/05

Rec'd 4-27-05 at LQS Board meeting at LQS office

Munger Chadwick

From: "Larry Robertson" <lvrobertson@mungerchadwick.com>
To: "Kaycee Conger" <LQSWater@aol.com>
Sent: Tuesday, April 26, 2005 11:40 AM
Attach: agreement (fnl).doc
Subject: Suggested Corporate Resolutions

Exhibit G-3

Attached for review and consideration by the members of the Board of Directors and you is a draft of suggested corporate resolutions, and the prefatory recital provisions, which would authorize the filing of the two draft applications I transmitted to you last week. In addition, these resolutions would also authorize the filing of an application for long-term financing authorization to fund implementation of those recommendations set forth in WestLand Resources Plan which relate to non-arsenic water system capital improvements. I have not drafted that application as yet. The resolutions are set up so that the Board of Directors can choose to adopt all or only some of them, and I will prepare the final set of recital provisions and corporate resolutions once we know the decision(s) of the Board of Directors.

Call me if you have any questions. Otherwise, I will plan to be in attendance at the Board of Director's Meeting in your offices at 10:30 tomorrow morning.

MUNGER CHADWICK

John F. Munger
Munger Chadwick, P.L.C.
333 N. Wilmot, Suite 300
Tucson, Arizona 85711
520-721-1900 (office)
520-747-1550 (fax)
jfmunger@mungerchadwick.com

****

The information in this email and in any attachments is confidential and may be privileged. If you are not the intended recipient, please destroy this message, delete any copies held on your systems and notify the sender immediately. You should not retain, copy or use this email for any purpose, nor disclose all or any part of its content to any other person.
Although this email and any attachments are believed to be free of any virus or other defect that might affect any computer system into which it is received and opened, it is the responsibility of the recipient to ensure that it is virus free and no responsibility is accepted by the sender for any loss or damage arising in any way from its use.

4-27-05 at Board meeting approved 3-0 vote JSG

WHEREAS, the United States Environmental Protection Agency ("EPA") has promulgated regulations, effective January 23, 2006 which reduce the allowable concentration of arsenic in potable water systems from 50 parts per billion to 10 parts per billion; and,

WHEREAS, the Company's water system is subject to the EPA's new arsenic concentration regulations; and,

WHEREAS, each of the Company's water system wells produces water with arsenic concentration in excess of the new arsenic concentration level to be allowed under the EPA's regulations; and,

WHEREAS, the Company will have to make certain capital investment and incur certain operation and maintenance expense in order to place itself in a position where it can comply with the EPA's new arsenic concentration regulations; and,

WHEREAS, at the Company's request, WestLand Resources, Inc. ("WestLand") has prepared a "Water System and Arsenic Master Plan" ("Plan") for the Company which, if implemented, would enable the Company to comply with the EPA's new arsenic concentration regulations and to achieve certain other water system improvements recommended by WestLand; and

WHEREAS, the revenues and rates and charges for water service recently authorized by the Arizona Corporation Commission ("ACC") will not produce sufficient revenues to allow the Company to finance the capital investment and operation and maintenance expense necessary to implement those recommendations in the Plan intended to enable the Company to comply with the EPA's new arsenic concentration regulations; and,

WHEREAS, the revenues and rates and charges recently authorized by the ACC also will not produce sufficient revenues to allow the Company to finance the other water system capital improvements recommended by WestLand;

NOW, THEREFORE, the Board of Directors of the Company hereby adopts the following resolutions:

RESOLVED, the Company and its management are hereby authorized to file such application(s) with the ACC as may be necessary in order for the ACC to reopen the Company's recently concluded rate case for the purpose of the ACC considering and adopting an Arsenic Cost Recovery Mechanism ("ACRM") which would allow the Company to recover through its rates and charges for water service capital costs and certain operation and maintenance expense related to the Company's efforts to comply with the EPA's new arsenic concentration regulations;

spelling R. JLL

BE IT FUTHER RESOLVED, the Company and its management are hereby authorized to file with the ACC an application requesting authorization to incur long-term indebtedness in an amount sufficient to enable the Company to make the capital investment necessary to implement those recommendations in the Plan related to compliance with the EPA's new arsenic concentration regulations;

BE IT FURTHER RESOLVED, the Company and its management are hereby authorized to file with the ACC an application requesting authorization to incur long-term indebtedness in an additional amount sufficient to enable the Company to make the capital investment necessary to implement the remaining water system recommendations set forth in the Plan;

BE IT FURTHER RESOLVED, that the Company and its management are hereby authorized to file an application with the Water Infrastructure Financing Authority of Arizona ("WIFA") requesting grants and/or loans in an amount or amounts sufficient to enable the Company to utilize such long-term financing authorization(s) as the Company may receive from the ACC; and

BE IT FURTHER RESOLVED, the Company and its management are hereby authorized to retain such consulting and professional services as may be necessary to implement the foregoing resolutions.

G:\WORK\LARRY\LasQuintas\agreement (fnl).doc

Exhibit G-4

February 20, 2005 John Gay's comments on Westland Resources' Las Quintas **Serenas** Water Company Draft Water Sustem Master Plan

1. I feel that it is a very inclusive fine report.

2. On page 11 Average Day of Peak month of 627 Gpm is different than Steve's September, October, November 2003 report where he said June to July 2003 used 21,349,000 gallons and he used a 16 hour day to come up with 741 Gpm. I am probably wrong, and it isn't important.

3. For Westland's info I do not think we mentioned we had a large extension cord in the #5 well storage shed and to try it out for times of no electricity we rented a Cat generator and test ran both #5 well (had its 50 H.P. turbine motor then) and #6 well.

4. In the Westland report you suggest we drill a new well sometime. I would like to see that be a top priority and included with the suggestions on how to treat for the arsenic.

5. On Feb. 17th I made a report and gave it to Steve on how to use the existing well and pipes on #5 well and take a portion of the 200 Gpm flow and run it thru a Severn Trent Model EAS - 1205 and into a 3,350 Gal. galvanized tank and use a 2" pump to put the treated water back into the well flow going into our system. Steve gave some suggestions, but saw no great problems with this idea so I will proceed with costs and comments on using this idea at each of our three wells.

6. For all of the following I am using the quote that Jeff Pals of Hennesy sent us on March 31, 2004. I was very interestd in pushing ahead quickly and getting a packaged deal from Hennesy on the ground and operating so we later got some better prices that the March 31st, but I am using that as it covered all three wells.

7A. #5 Well Model EAS -1205 Adsorbers & Media $74,000
Capacity 200 Gpm, Treatment 114 Gpm, Auxiliary Equip. $10,000
John's tanks, piping , elec. etc. $10,000 giving a total about $100,000

7B. #6 Well Model EAS -1606 Adsorbers & Media $161,000
Capacity 400 Gpm, Treat. 300 Gpm, Aux. Equipment $10,000
John will probably have to go to 3 or 4" pipe Total about $200,000

7C. #7 Well Model EAS -3008 Adsorbers & Media $219,000
Capacity 800 Gpm. Treatment 533 Gpm Aux. Equip. $10,000
John's will probably need 6" pipe. Guess total about $280,000

7A, 7B, and 7C Totals $100,000 + $200,000 + $280,000 = **$580,000**

8. This compares with Westland's **$1,279,000**

9. I am now going to comparre Westland,s with John,s.
9A. Item #1 Site Demolition Westland $10,000 John Zero
(All wells will remain the same, just add arsenic removal equipment.)
9B. Site Piping Well Site #6 Westland $100,000 John $40,000
9C. Concrete Slabs for Site Equip. " $14,000 John $10,000?
9D. 8" water main from #7 to #6 " $112,500 " Zero
9E. 250,000 gallon reservoir. " $212,500 " John would like to see some of this money (or all) in a tank on the hill where customers will have water when there is no electricity --Also take some of this money and start things going on a new well.
9F. 850 Gpm transfer pumps Westland $200,000 John Zero as his idea has us using all of our present wells and pumps without any changes.
9G. 1,250 Gpm Adsorption Removal Unit $500,000 John $580,000 which is three separate units so if anything goes wrong with one the other two are independant and can produce water to drink.
9H. 200 Gpm Unit for #5 Well Westland $85,000 John zero as already included in 9G of $580,000.
9I. Fencing at #6 Well ----------Westland $15,000 John Zero If this idea has any merit when Westland designs the system John's guesses could by way off --- They probably are!
9J. Remove Bowls on #6 and #7 wells. Westland $30,000 John Zero John is leaving the wells just like they are now.
9K. 25% Engineering and Contingencies Westland $319,750 John wonders if his should be nearly Zero as he plans to use off the shelf proven units at each well. So should we be comparing John's **$580,000** to Westland's **$1,279,000,** or really with their **$1,598,750 ?**

10. Other than wages, the purchase of power is one of our largest expenses and runs about $20,000 per year. I do not know if we explained to Westland that by using interruptible power we pay about half price. We have been doing this for 18 or 20 years and Trico changes the name and how they apply it but usually it makes our power be about half price. One time it was called "Time Of Day." Steve now knows by the

temperatore the day before, and the 10 P.M. wether report, and if it is a weekend what he has to plan for the next day.

11. I do not know the details of Westland,s plans at #6 well but it looks like we will not be able to use the #6 well on natural gas when Trico turns off our electricity so the half priced power will be gone.

12. Also it looks like the 250,000 gallon reservoir at #6 well will be of no value when Trico turns off our power.

13. Westland may think John is unhappy with their report. No, John thinks they did a fantastic job to turn out what they did for us to look at and make suggestions. After all Steve has run the system for 20 years and John has been Pres., Vice Pres., Manager, Co-Manager, etc. for 40 years. I may be getting senile, but I still remember a few things. Westland has been involved for maybe 2 or 3 months.

2-20-05 DOC

E mail? or Fax? 9 or 10 A.M. Tues. Feb. 22, 2005 to:
Westland
Mike Wood
Rohn Householder

/ AGNT

LAS QUINTAS SERENAS WATER COMPANY
WATER ANALYSIS INFORMATION

Wells 5, 6, & 7

Date: Wednesday, March 31, 2004

Retailer: HENNESY MECHANICAL SALES, LLC
Contact: Jeff Pais
Mailing Address: 201 S. 26th Street
City, State, Zip Code: Phoenix, Arizona 85034
Telephone Number: (602) 996-3444 Facsimile Number: (602) 996-9408
E-Mail Address: jeff@hennesymech.com

Treatment Capacity: 1 MGD Maximum

Water Analysis:

Test	Well #5 200	Well #6 350 – 425	Well #7 600 – 850	GPM
Temperature	26	26	26	C
pH	6.8-7.7 (7.2 Normal)	7.1-7.5 (7.3)	7.2-7.3	
Total As	9.0-10.0 (9.0)	12.0-14.0 (14.0)	10.0-12.0 (11.0)	PPB
As (III)	—	—	—	PPB
Alkalinity	150	139	143	PPM
Hardness	426	106	99	PPM
Silica		39.2	36.9	PPM SiO2
Sulfate	180	37	30	PPM SO4
Sulfide		<0.05	<0.05	PPM S
Phosphate		<0.06	<0.06	PPM PO4
Turbidity		0.2	0.4	NTU
Suspended Solids		<5	<5	PPM
Antimony	<0.0030	<3.0	<3.0	PPM Sb
Cadmium	<0.0005			PPM Cd
Chromium	<0.010	<10	<10	PPM Cr
Iron	<0.01	~~<50~~ 5	<40	PPM Fe
Lead		10	<2.0	PPM Pb
Manganese		<10	<10	PPM Mn
Molybdenum		<30	<30	PPM Mo
Selenium	.03	<3.0	<3.0	PPM Se
Uranium	5.4 +/- 1.1	6.4 +/- 1.2	6.4 +/- 1.2	PPM U
Vanadium		<20	<20	PPM V

Direct / Send Inquiries to:
Steve Gay; General Manager / Operator
Las Quintas Serenas Water Company P.O. Box 68, Sahuarita Arizona 85629
Telephone: 520.625.8040 Facsimile: 520.648.3520 E-Mail: LQSWater@aol.com

SORB 33™ As Removal System Sizing & Estimate

System Requirements

Client:	Las Quintas Serenas Water Co					Normal Operating Factor:	75%
Name of Site:	Well #5			Ambient pH:	7.20	Fe/Mn Removal:	No
Capacity:	0.29	MGD		As Analysis:	9.0 µg/L	pH Adjust't/Value:	No
	200	GPM		Backwash Volume:	3,927 Gals	Reagent:	
Treatment:	114	GPM		Max Capacity:	160 GPM	Residuals Treat:	No

System Design

No. of Trains:	1		Media per Adsorber:	69	Ft^3
Model No.:	EAS-1205		Total Media Inventory:	69	Ft^3
Diameter:	5.0	Ft	Media Bed Depth:	3.5	Ft
Specific Velocity:	5.8	GPM/Ft^2	Flow Configuration:	Parallel ^{W}/Bypass	
Fe/Mn Removal:	No	Units	Working Capacity:	254,200	BV's
Total Footprint:	8 Ft x 6 Ft		Cycle Life:	34.8	Months

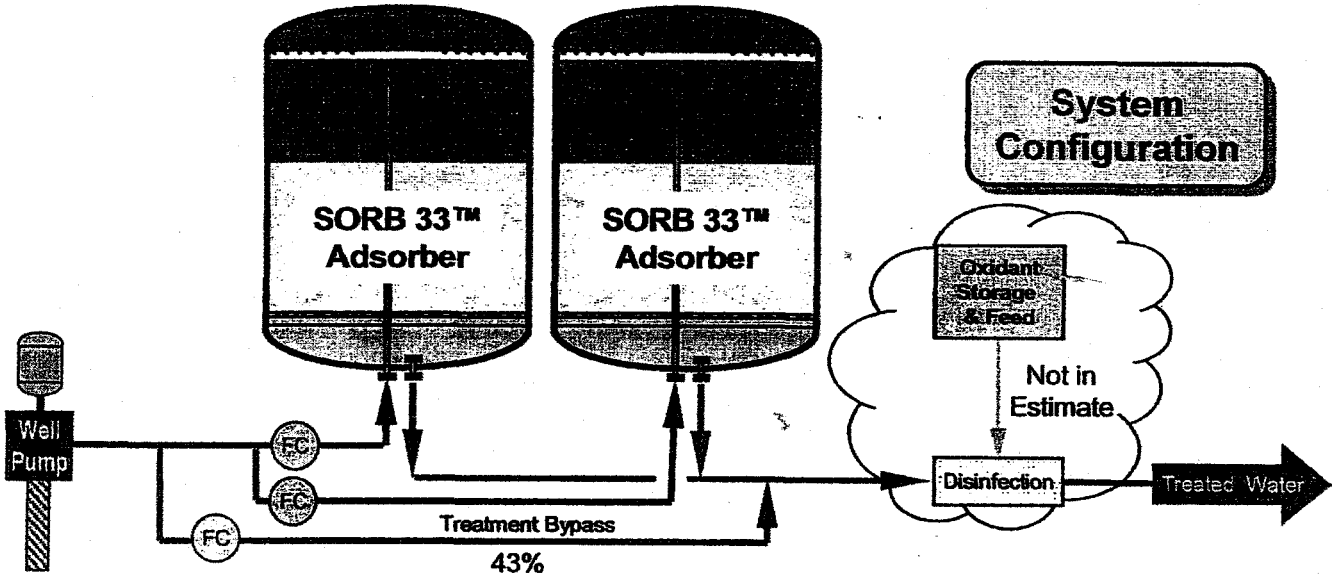

Estimated System Costs

Adsorbers & Media:	$74,000	Media Replace & Disposal:	$4,811
Auxiliary Equipment:	$10,000	Other Treatment Costs:	$0
Installation:	$0		
Total Capital Costs:	**$84,000**	Annual Operating Costs:	**$4,800**

Unit Capital Costs: **$0.292** per Gal/Day of Capacity

Unit Operating Costs: **$0.061** per 1,000 Gals

Budgetary Estimate in Effect Through: **22-Jun-04**

SEVERN TRENT SERVICES

Filtration Products

SORB 33™ As Removal System Sizing & Estimate

System Requirements

Client:	Las Quintas Serenas Water Co					Normal Operating Factor:	75%
Name of Site:	Well #6			Ambient pH:	7.30	Fe/Mn Removal:	No
Capacity:	0.58	MGD		As Analysis:	14.0 µg/L	pH Adjust't/Value:	No
	400	GPM		Backwash Volume:	5,655 Gals	Reagent:	
Treatment:	300	GPM		Max Capacity:	460 GPM	Residuals Treat:	No

System Design

No. of Trains:	2		Media per Adsorber:	90	Ft^3
Model No.:	EAS-1606		Total Media Inventory:	180	Ft^3
Diameter:	6.0	Ft	Media Bed Depth:	3.2	Ft
Specific Velocity:	5.3	GPM/Ft^2	Flow Configuration:	Parallel ^{w}/Bypass	
Fe/Mn Removal:	No	Units	Working Capacity:	118,300	BV's
Total Footprint:	16 Ft x 8 Ft		Cycle Life:	16.2	Months

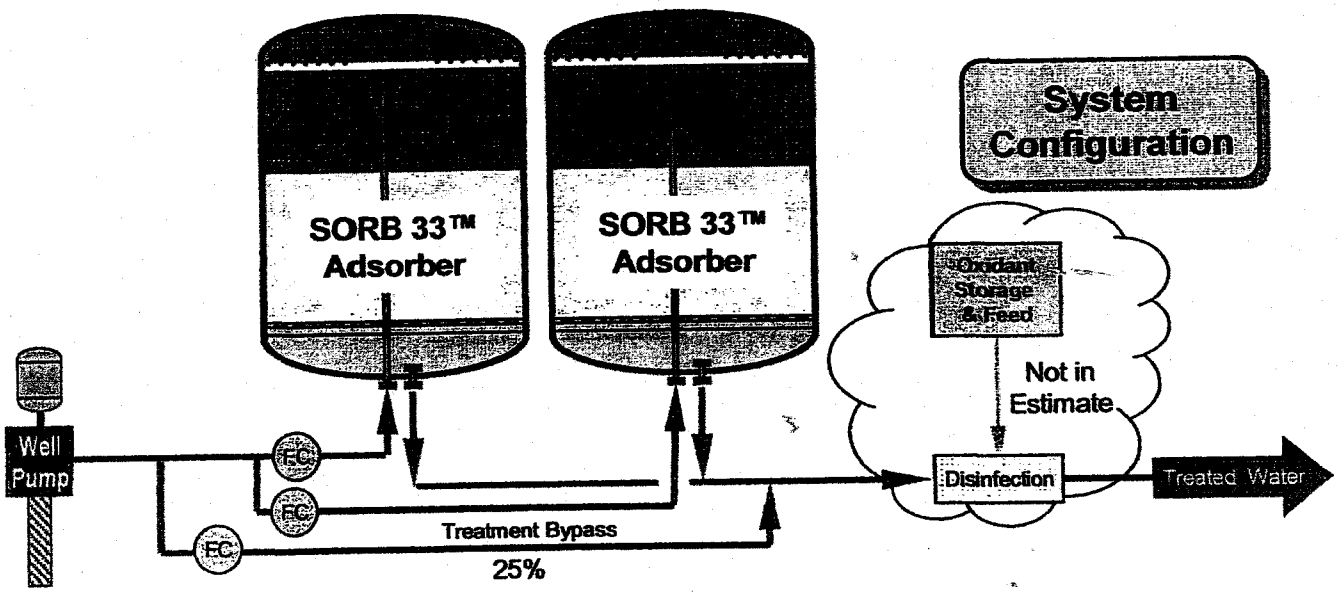

Estimated System Costs

Adsorbers & Media:	$161,000	Media Replace & Disposal:	$27,139
Auxiliary Equipment:	$10,000	Other Treatment Costs:	$0
Installation:	$0		
Total Capital Costs:	**$171,000**	Annual Operating Costs:	**$27,100**

Unit Capital Costs: **$0.297** per Gal/Day of Capacity

Unit Operating Costs: **$0.172** per 1,000 Gals

Budgetary Estimate in Effect Through: **22-Jun-04**

SEVERN TRENT SERVICES

Filtration Products

SORB 33™ As Removal System Sizing & Estimate

System Requirements

Client:	Las Quintas Serenas Water Co					Normal Operating Factor:	75%
Name of Site:	Well #7			Ambient pH:	7.20	Fe/Mn Removal:	No
Capacity:	1.15	MGD		As Analysis:	11.0 µg/L	pH Adjust't/Value:	No
	800	GPM		Backwash Volume:	10,053 Gals	Reagent:	
Treatment:	533	GPM		Max Capacity:	810 GPM	Residuals Treat:	No

System Design

No. of Trains:	2		Media per Adsorber:	160	Ft^3
Model No.:	EAS-3008		Total Media Inventory:	321	Ft^3
Diameter:	8.0	Ft	Media Bed Depth:	3.2	Ft
Specific Velocity:	5.3	GPM/Ft^2	Flow Configuration:	Parallel ™ /Bypass	
Fe/Mn Removal:	No	Units	Working Capacity:	171,900	BV's
Total Footprint:	20 Ft x 10 Ft		Cycle Life:	23.5	Months

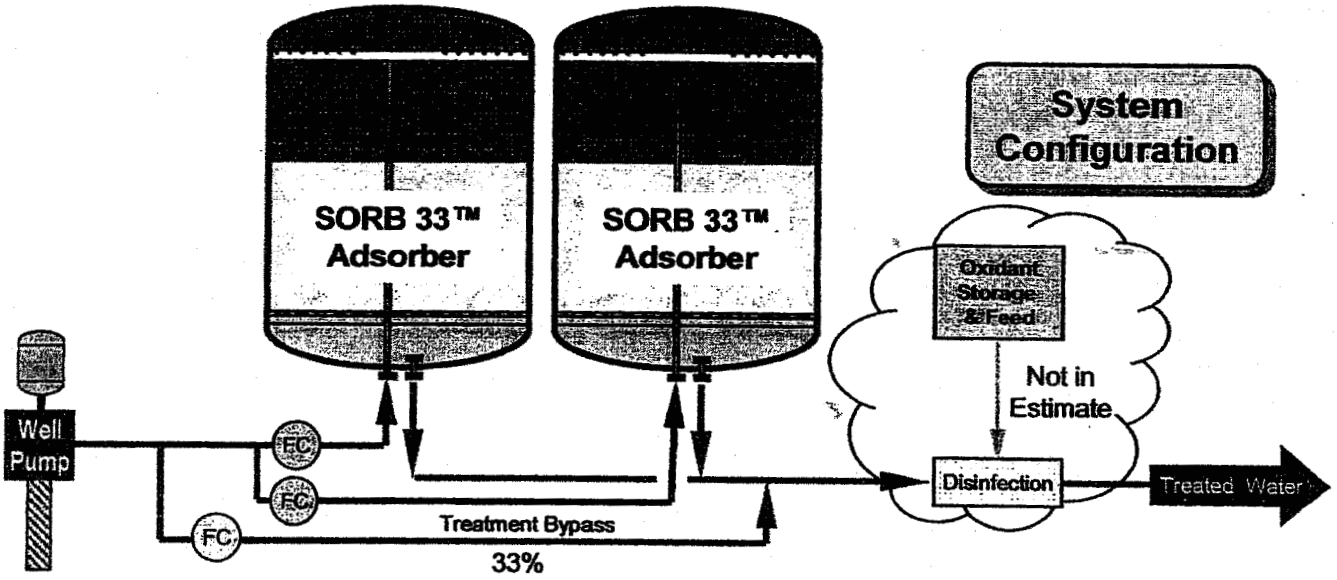

Estimated System Costs

Adsorbers & Media:	$219,000	Media Replace & Disposal:	$33,203
Auxiliary Equipment:	$10,000	Other Treatment Costs:	$0
Installation:	$0		
Total Capital Costs:	**$229,000**	Annual Operating Costs:	**$33,200**

Unit Capital Costs: **$0.199** per Gal/Day of Capacity

Unit Operating Costs: **$0.105** per 1,000 Gals

Budgetary Estimate in Effect Through: **22-Jun-04**

SEVERN TRENT SERVICES

Filtration Products

SORB 33™ As Removal System Scope of Supply

Adsorber Vessel

- Vertical Pressure Vessel(s), Carbon Steel, 5'0" Straight Side Height
- Code Stamped to ASME Section VIII, Division 1
- Interior Coated with NSF 61 Epoxy
- Bottom Distributor/Collector
  - 10'- Ø & Larger: Cone Bottom with Screen Nozzles
  - 8'- Ø & Smaller: Header/Lateral with Well Screen Pipes
- Media Fill: Gravity Fill & Hydraulic Empty
  - Options for Eduction Fill & Vacuum Empty
- Carbon Steel Piping, A53 Grade B

Process Valves

- Automatic Influent Flow Inlet Valves
- Manual Valve Tree for Isolation, Backwash & Media Fill/Drain

Instrumentation & Specialties

- Flow Meter & Totalizer for Each Adsorber
- Inlet & Effluent Pressure Gauges
- Differential Pressure Gauges for Each Adsorber

Optional Control System (as indicated in Requirements)

- Painted Steel NEMA 12 Control Panel with Grounding
- Fully Programmed PLC with Software Documentation
- Automated Valves for Isolation and Backwash

Optional Equipment (as indicated in Requirements)

- Acid pH Adjustment – pH PID Loop, Metering Pump, Inline Mixer & Storage
- CO_2 pH Adjustment – pH PID Loop, Mixing Unit & Storage Tank
- Fe/Mn Removal Unit – Pressure Vessel, Automatic Valves & Media
- Residuals Handling – Backwash Water Hold Tank & Drain or Reclaim Pump

Field Services

- System Installation & Media Fill Inspection
- Training, Start-up & O&M Manuals

SEVERN TRENT SERVICES

Filtration Products

MILLER BROOKS
Environmental, Inc.

Exhibit G-5
(Full)

PRELIMINARY EVALUATION AND BUDGETARY OPINION OF PROBABLE COSTS FOR DISSOLVED ARSENIC REDUCTION SYSTEMS FOR LAS QUINTAS SERENAS WATER COMPANY'S THREE WELLS

JULY 1, 2005

PREPARED FOR:
MR. JOHN S. GAY
1241 W. CALLE DE LA PLAZA
SAHUARITA, ARIZONA 85629

PREPARED BY:
MILLER BROOKS ENVIRONMENTAL, INC.
202 EAST EARLL DRIVE, SUITE 470
PHOENIX, ARIZONA 85012

MILLER BROOKS PROJECT #635-0001-01

Registered Professional Engineer (Chemical)
CERTIFICATE NO. 19384
RICHARD S. CRAFT
Date Signed 7-1-05
ARIZONA U.S.A.

TABLE OF CONTENTS

1.0 INTRODUCTION 1
1.1 PROJECT BACKGROUND 1
1.2 STRATEGY TO ACHIEVE COMPLIANCE 2
2.0 WATER SYSTEM SPECIFICATIONS 2
2.1 WATER WELLS AND ASSOCIATED INFRASTRUCTURE 2
3.0 ARSENIC REDUCTION TECHNOLOGY 4
3.1 ARSENIC REDUCTION TECHNOLOGY AND SYSTEM REQUIREMENTS 4
3.1.1 Technology Description 4
3.1.2 Design Criteria 5
3.1.3 Environmental Impacts 5
3.1.4 Land Requirements 5
3.1.5 Potential Construction Problems 5
3.1.6 Advantages/Disadvantages 5
3.1.7 Permitting 6
3.2 SYSTEM EQUIPMENT AND INSTALLATION REQUIREMENTS 6
3.2.1 Treatment Equipment Requirements 6
3.2.2 Site Work 7
3.2.3 Piping and Mechanical Work 7
3.2.4 Electrical and Controls 7
4.0 COST ESTIMATES 8
4.1 ENGINEER'S OPINION OF PROBABLE BUDGETARY COSTS 8
4.2 TREATMENT SYSTEM INSTALLATION COST BREAKDOWN 8
4.3 O&M COSTS 9
5.0 SUMMARY 9
6.0 LIMITATIONS 10
7.0 REFERENCES 11

FIGURES

Figure 1 Site Location Map
Figure 2 Water System Infrastructure
Figure 3 Process and Instrumentation Diagram
Figure 4 Piping Schematic for Well No. 5
Figure 5 Piping Schematic for Well No. 6
Figure 6 Piping Schematic for Well No. 7

Registered Professional Engineer (Chemical) CERTIFICATE NO. 19384 RAYMOND S. CRAFT Date Signed 7-1-05 ARIZONA U.S.A.

TABLES

Table 1 Well Capacities and Arsenic Concentrations
Table 2 Piping and Equipment Descriptions
Table 3 Engineer's Opinion of Probable Costs
Table 4 Estimated Capital and O&M Cost Summaries

APPENDICES

Appendix A Arsenic Removal System Sizing and Estimate Summaries
Appendix B Equipment Information

1.0 INTRODUCTION

Miller Brooks Environmental, Inc. (Miller Brooks) of Phoenix, Arizona is pleased to submit this Preliminary Evaluation and Opinion of Probable Cost for Dissolved Arsenic Reduction Systems for Las Quintas Serenas Water Company's Three Wells. The wells are located within the Las Quintas Serenas subdivision in parts of Sections 22, 23, 26, and 27, Township 17 South, Range 13 East, Pima County, Arizona (Figure 1). This report was prepared at the request of Mr. John S. Gay, project representative and member of the Las Quintas Serenas Water Company (LQSWC) Board. The report provides an evaluation of the treatment requirements and costs for removal of dissolved arsenic detected in Las Quintas Serenas Water Company's three production wells, Well No. 5, Well No. 6, and Well No. 7 (Figure 2). This effort involves providing an engineering analysis and budgetary estimate for installing separate treatment systems at each well as an alternative to installation of a central treatment system for arsenic reduction. Miller Brooks understands that the LQSWC has contracted with another engineering firm for design of the central treatment system option.

1.1 PROJECT BACKGROUND

At the request of the LQSWC project representative, Hennesy Mechanical Sales (Hennesy) provided equipment proposals for individual arsenic treatment systems at each of the LQSWC three wells (Appendix A). The proposals were prepared by Severn Trent Services (STS), one of the major suppliers of arsenic adsorption treatment technology. Hennesy is the Arizona representative for STS. In order to develop a more detailed understanding of the additional requirements and probable costs for installation of the proposed individual arsenic treatment systems, the project representative solicited a referral from Hennesy for an engineering company that could perform the detailed evaluation and prepare cost estimates. Hennesy subsequently recommended Miller Brooks, and at the direction of the project representative, provided the STS proposals to Miller Brooks. Miller Brooks was later retained to prepare this report.

Beginning on January 23, 2006, the Federal criteria for allowable arsenic concentrations in drinking water will be reduced to 10 micrograms per liter (μg/L). Based on the water-quality information provided in the STS proposals (Appendix A), water supplied from the three wells contains between 9 μg/L and 14 μg/L. Consequently, in order to be in compliance with this new standard, the LQSWC will be required to reduce the total influent Aasenic concentration in the water system to achieve a concentration that is sufficiently below the 10 μg/L limit. (Note that although the arsenic

concentration for Well No. 5 is less than 10 μg/L, treatment to ensure that arsenic concentration in this well remains below 10 μg/L has also been proposed for this well.)

The capacity of each well, the required treatment flowrate, and arsenic concentration in each of the three wells is as follows:

Table 1 – Well Capacities and Arsenic Concentrations

Source	Capacity		Required Treatment Flowrate (gpm)	Arsenic Concentration (μg/L)
	MGD[1]	GPM[2]		
Well No. 5	0.29	200	114	9
Well No. 6	0.58	400	300	14
Well No. 7	1.15	800	533	11

[1] Million Gallons per Day (MGD)

[2] gallons per minute (GPM)

1.2 STRATEGY TO ACHIEVE COMPLIANCE

Miller Brooks believes that the most effective strategy to achieve compliance is to treat only as much as would be required to safely achieve the 10 μg/L limit. Therefore, it has been assumed that a portion of the water from each well will bypass the treatment equipment and will be blended downstream of the treatment system prior to entry into the distribution system. Blending and split-stream treatment are both accepted methods of achieving compliance (U.S. Environmental Protection Agency [EPA], 2003). In Table 1 above, the required treatment flow rate is given. This rate was calculated based on achieving a combined arsenic discharge concentration of 5 μg/L (one half of the 10 μg/L limit).

2.0 WATER SYSTEM SPECIFICATIONS

The LQSWC system consists of the following engineering specifications:

2.1 WATER WELLS AND ASSOCIATED INFRASTRUCTURE

The LQSWC water system consists of three existing and operating wells. Existing and proposed water system infrastructure is presented in Figure 2. The following provides available information compiled from the project representative, the Arizona Department of Environmental Quality (ADEQ), and the Arizona Department of Water Resources (ADWR) database:

- Well No. 5:
  - Public Water System #: 10064
  - POE #: 005
  - ADWR Registration #: 55-608531
  - Legal Cadastral Coordinates: SW ¼, SW ¼, NW ¼, Section 26, Township 17 South, Range 13 East, Pima County
  - Well Installation: 1972
  - Approximate Well Depth: 807 feet
  - Approximate Depth to Groundwater: 380.0 feet below ground surface (bgs) (2000)
  - Well Diameter: 10-3/4 inches to 535 feet and 8-1/2 inches to 805 feet
  - Casing Type: Welded Steel
  - Approximate Daily Production: 290,000 gallons per day (gpd)
  - Storage Tank: None
  - Maximum Pump Capacity: 250 gallons per minute (gpm)
  - Hydro-pneumatic Tanks: One 1,500-gallon tank
  - Booster Pumps: None

- Well No. 6:
  - Public Water System #: 10064
  - POE #: 006
  - ADWR Registration #: 55-608530
  - Legal Cadastral Coordinates: SE ¼, NE ¼, SW ¼, Section 26, Township 17 South, Range 13 East, Pima County
  - Well Installation: 1971
  - Approximate Well Depth: 837 feet
  - Approximate Depth to Groundwater: 320 feet bgs (2000)
  - Well Diameter: 12-3/4 inches
  - Casing Type: Welded Steel
  - Approximate Daily Production: 580,000 gpd
  - Storage Tank: None
  - Maximum Pump Capacity: 300 gpm
  - Hydro-pneumatic Tanks: One 700-gallon and one 1,500-gallon tank
  - Booster Pumps: None

- Well No. 7:
  - Public Water System #: 10064
  - POE #: 007
  - ADWR Registration #: 55-566940
  - Legal Cadastral Coordinates: SE ¼, SW ¼, SW ¼, Section 26, Township 17 South, Range 13 East, Pima County
  - Well Installation: 1998
  - Approximate Well Depth: 922 feet bgs
  - Approximate Depth to Groundwater: Not reported
  - Well Diameter: 12 inches
  - Casing Type: Steel
  - Approximate Daily Production: 1,150,000 gpd
  - Storage Tank: None
  - Maximum Pump Capacity: 750 gpm

- Hydro-pneumatic Tanks: One 2,000-gallon tank
- Booster Pumps: None

As illustrated in Figure 2, the LQSWC distribution system consists of the following infrastructure:

- Three production wells independently connected to the distribution network
- Reservoirs: Existing 30,000- and 60,000-gallon storage tanks
- Number of Connections: Unknown [Total Population: 4063 (ADEQ, 2005)]
- Total System Yield: 2.02 MGD
- Water Main Diameter: Existing 6-inch, 8-inch, 10-inch, and 12-inch transmission mains
- Fire Hydrants: None
- Pressure System: Varies across the distribution network due to elevation differences (Well No. 5: ~60 pounds per square inch gauge (psig); Well No. 6: ~100 psig; and Well No. 7, ~80 psig).

3.0 ARSENIC REDUCTION TECHNOLOGY

Based on the chemical and physical data provide by LQSWC, adsorption onto iron-based sorbents (IBS) was recommended by STS to address reduction of dissolved arsenic in drinking water generated at each of LQSWC's three wells. The following is a brief description of that technology.

3.1 ARSENIC REDUCTION TECHNOLOGY AND SYSTEM REQUIREMENTS

Arsenic reduction by IBS is one of the more practical arsenic treatment technologies. This technology is commonly referred to as adsorption using granular iron oxide or granular ferric hydroxide (GFH). Adsorption of arsenic onto granular iron oxide is an emerging method of removing dissolved arsenic from drinking water. Although new to the United States, the method has been successfully utilized for years in Germany. The technology appears to be simple and reliable and is rapidly becoming the favored technology for removal of dissolved arsenic from drinking water sources.

3.1.1 Technology Description

Untreated water extracted from the well is passed through a bed of iron-oxide pellets, facilitating the adsorption of dissolved arsenic onto the iron oxide. When the iron oxide becomes spent (unable to adsorb sufficient arsenic to meet water-quality goals), it is discarded, and replaced with fresh iron oxide. A typical piping and instrumentation diagram (P&ID) for the proposed arsenic treatment systems is presented as Figure 3. Equipment and piping descriptions for each of the three individual arsenic treatment systems is presented in Table 2.

3.1.2 Design Criteria

The IBS Arsenic adsorption equipment should have the following properties:

- Produce product water with concentrations of less than 10 μg/L Arsenic;
- Operate reliably; and
- Operate with minimum maintenance

3.1.3 Environmental Impacts

An IBS arsenic adsorption system would be installed near each of the three wells. The spent iron-oxide pellets can be disposed of as solid, non-hazardous waste in a landfill. No adverse environmental effects are expected. Backwashing the units will produce a small amount of solids, which can be captured in a bag filter and disposed of as solid waste (i.e., in the trash). Backwash water will be stored in a tank (one tank for each well/treatment system). Recovered backwash will be recycled back to the water supply (upstream of the treatment unit) over a several day period following each backwash event.

3.1.4 Land Requirements

An IBS arsenic adsorption system would require no new land. However, a small building or shade structure is recommended for equipment subject to damage from ultraviolet radiation. For this project, a shade structure is recommended for Well No. 5 only, as the vessels for this system may require protection from the sun. Concrete pads will also be required for each treatment system. System footprints and concrete pad sizes vary from 13 feet by 5 feet for Well No. 5, 16 feet by 6 feet for Well No. 6, to 20 feet by 10 feet for Well No. 7. Locations of the proposed treatment systems for Well No. 5, Well No. 6, and Well No. 7 are presented in Figure 2. The general arrangements for each of the treatment systems and auxiliary equipment are presented in Figures 4, 5, and 6, respectively.

3.1.5 Potential Construction Problems

Arsenic adsorption systems based on IBS use ductile iron, carbon steel, or PVC pipe and valves, and steel or fiberglass pressure vessels common to other types of media filtration, such as granular carbon or ion exchange resin. For this reason, the equipment is available off the shelf, and construction problems are minimal.

3.1.6 Advantages/Disadvantages

The advantages of using IBS arsenic adsorption systems are:

- The technology is simple and well understood
- Equipment is easy to operate
- Operations require no addition of chemicals
- There is no requirement to chlorinate the water
- There is only one point of maintenance
- Additional taps require no additions to treatment equipment
- Operating costs are moderate due to the relatively low arsenic concentration within these wells

The disadvantage of IBS Arsenic adsorption systems is:

- The technology is not recognized by the EPA as a "best available technology" (BAT) for removing arsenic from drinking water (EPA, 2003). The lack of recognition is because IBS' track record was not sufficiently established to be considered as BAT at the time the rule was promulgated. Despite the lack of recognition, the technology is currently being implemented throughout the United States, including Arizona.

3.1.7 Permitting

Each treatment system will require a permit to construct. The permit application process from the Pima County Department of Environmental Quality (PDEQ) requires submittal of an application and a design report, along with a completed set of construction plans. Equipment is typically ordered in advance of the application for the permit to construct. Permits to construct generally require approximately eight weeks for approval. During this period, PDEQ will conduct a review of the drinking water treatment system design. Required changes must be incorporated into the engineering plans prior to obtaining the permits to construct and issuing the construction documents.

3.2 SYSTEM EQUIPMENT AND INSTALLATION REQUIREMENTS

In addition to the treatment technology, there are also related ancillary efforts for site work and installation of on-site plumbing and electrical work.

3.2.1 Treatment Equipment Requirements

Recommended equipment for each system is presented in Figure 3 and Table 2. In addition to the treatment equipment (Appendix A), each system includes a backwash recovery system. The backwash recovery system includes a tank, bag filter, and backwash recycle pump. Each treatment system will periodically require backwashing (approximately every 30 days). Vessels from the treatment system will be backwashed one at a time (there are two vessels per treatment system). Backwash water will pass through the bag filter(s), where solids (a small amount of fine particulates and spent media) will be captured from the backwash. Each tank will be sized to contain the amount of water from one

backwash event. Following backwash of each vessel, filtered backwash will be slowly pumped back into the supply upstream of the treatment system. Information summaries of backwash recovery equipment are provided in Appendix B.

3.2.2 Site Work

Each system will require a concrete pad for the treatment system equipment. An enclosure, or canopy, is recommended for the treatment equipment for Well No. 5 to provide protection from the sun. No enclosures or provisions for shade or protection from the sun have been included for either of the other two treatment systems for Wells No. 6 and 7. The recommended sizes for each concrete pad are presented in Table 3 and shown on Figures 4 through 6.

3.2.3 Piping and Mechanical Work

Piping for each system is shown in Figure 3, the P&ID, and Figures 4 through 6, the piping schematics for each system. The P&ID presents the functional requirements and major equipment, controls, and valves for the proposed treatment system. Piping and equipment descriptions are presented in Table 2. Each system will include inlet, outlet, treatment bypass, backwash drain, and backwash recycle piping. A flow meter is recommended in the treatment bypass to provide a means to monitor flow rate and total amount of flow through the treatment bypass. (Each treatment system also includes a flow meter for measurement of the flow rate and total amount of flow through each treatment system.) Figures 4 through 6 also present the proposed general arrangement and locations of the treatment and backwash recovery equipment for each treatment system. Interconnecting piping is shown in a single-line format to generally show the major piping runs between equipment. Note that the purpose of the piping schematics is to provide a means of estimating piping lengths, but not for a detailed material takeoff or for construction.

3.2.4 Electrical and Controls

Based on information provided to Miller Brooks, it is assumed that adequate single-phase power is available at each well site. Each system will require a 120-volt circuit for the systems control panel. Interconnecting wiring is also required between the control panel and the level indicator and switches in each backwash recovery tank, as well as to each backwash recycle pump and to the bypass flow meter. All of the controls will be interfaced with the control panel. Power supply to the recycle pump will be supplied from the control panel.

4.0 COST ESTIMATES

Based on the equipment descriptions presented in Section 3.0, Miller Brooks has prepared costs estimates for the individual arsenic treatment systems proposed for each well. A summary and breakdown of the costs for each treatment system are presented in Table 3. It should be noted that we have also provided estimated operation and maintenance (O&M)costs associated with each of the arsenic reduction systems, along with the estimated capital and installed costs in Table 4.

4.1 ENGINEER'S OPINION OF PROBABLE BUDGETARY COSTS

Total installed system costs for each of the three proposed arsenic treatment systems are presented in Table 3, page 1. Installed system costs include the cost for procurement and installation of the arsenic treatment system equipment (including site work, piping, and electrical). Installed system costs also include design, permitting, construction inspections, and preparation of as-builts (or redlines). A ten percent contingency is also included to cover costs that were not anticipated during project estimates for changes in field conditions, or for changes in pricing for equipment and materials which may occur between the time the quotes are obtained and when the estimates are prepared. Arsenic treatment system costs are based on the equipment estimates provided by Hennesy and STS (Appendix A). Estimated costs for backwashing equipment were provided by other vendors. Note that costs for design, permitting, construction inspections and redlines are typically approximately 12 to 15 percent of the total installation costs. Based on the above, the Engineer's Opinion of Total Probable Cost for the three arsenic treatment systems is estimated to be approximately $872,400. Note that this cost is most likely less than what it would cost for construction using a general contractor (see discussion in Section 4.2 below). However, Miller Brooks believes that this cost presentation is reasonable given the simplified approach requested by the project representative.

4.2 TREATMENT SYSTEM INSTALLATION COST BREAKDOWN

A breakdown of the equipment, site work, piping, and electrical costs is also presented in Table 3, page 1. The total estimated cost for equipment installation for all three systems would be approximately $712,000. Summaries of these costs are detailed on Table 3, pages 2 through 4. Unit costs are based on R.S. Means (2003a and 2003b). Note that a major assumption in this cost estimate was that all of the work would be either self-performed or subcontracted to local contractors. It was also assumed that all equipment and materials would be purchased directly from the suppliers. As such, the cost for equipment does not included any contractor markups for overhead and profit, local conditions, or escalated costs as would typically be included for projects performed by a general

contractor. A 25 percent markup was used for materials and labor for site work (i.e., concrete), piping, and electrical to allow for subcontractor markups. Note that any work performed by LQSWC may not be subject to the 25 percent markup. Excluding this 25 percent, subcontractor markup would reduce the overall project costs to $851,600 (a reduction of approximately $21,400).

4.3 O&M COSTS

The estimated O&M costs for each system are based on the estimates provided by Hennesy and STS (Appendix A). For IBS arsenic adsorption systems, the majority of these costs are for annual replacement of media (i.e., the IBS). Including a nominal allocation for labor, the total O&M cost would be $47,800, or approximately $0.024 per 1000 gallons treated. No costs have been included for chemicals which may be required for disinfection (i.e., hypochlorite) or pH control.

5.0 SUMMARY

Benefits of the individual treatment approach include diversity of supply, flexibility for emergency repairs or scheduled maintenance and an economical approach for drinking water treatment. Disadvantages include the requirement to obtain permits, monitor, and maintain three separate treatment systems. However, the major advantage of individual systems versus a central arsenic reduction system would most likely reduce costs associated with minimal infrastructure upgrades.

In the event the LQSWC elects to implement arsenic reduction systems at each well, Miller Brooks recommends IBS arsenic adsorption systems manufactured by STS. This recommendation is based on overall project costs, taking into account the capital costs, as well as long-term O&M costs. Also note that this work was based on a limited amount of information provided by the project representative and Hennesy. Although this information was sufficient for preparing this report, additional site information (site plan, mechanical, and electrical drawings, well pump information, equipment information, operational data) for each well would be necessary for preparing a detailed design for individual treatment systems at each well. Should LQSWC wish to pursue treatment at each well, rather than in a central treatment facility, Miller Brooks would be pleased to meet with LQSWC's Board to provide additional details regarding the findings of this report and to discuss the individual treatment option.

6.0 LIMITATIONS

This Preliminary Evaluation and Budgetary Opinion of Probable Cost for Las Quintas Serenas Water Company's Three Wells has been prepared by Miller Brooks Environmental, Inc. (Miller Brooks) for the sole use of the project representative, Mr. John S. Gay. Our professional services have been performed using that degree of care and skill ordinarily exercised under similar circumstances by other engineers practicing in this field. No other warranty, expressed or implied, is made as to the professional findings or advice in this report. Any use of or reliance on this report by a third party shall be at that party's sole risk.

Miller Brooks can offer no assurances and assumes no responsibility for site conditions or activities outside the scope of the inquiry as outlined in this document. All parties should understand that Miller Brooks has relied on the accuracy of documents, oral information, and other materials, services, and information provided by the project representative and other parties. Miller Brooks must provide any subsequent modification, revision, or verification of this report in writing.

Miller Brooks appreciates the opportunity to provide these consulting services. Should there be any questions regarding information presented in this report or if further documentation is desired, please contact us at 602-728-0577.

PREPARED BY:

Miller Brooks Environmental, Inc.

Raymond S. Craft, P.E.
Arizona Registered Professional Engineer No. 19384

Registered Professional Engineer (Chemical)
CERTIFICATE
19384
RAYMOND S.
CRAFT
Date Signed 7-1-05
ARIZONA U.S.A.

7.0 REFERENCES

Arizona Department of Environmental Quality, 2005, *Safe Drinking Water Monitoring Assistance Program (MAP), MAP Schedule for Pima County.*

R. S. Means, 2003a, *Environmental Remediation Cost Data – Assemblies*; R. S. Means Company, Kingston, Massachusetts.

_____, 2003b, *Environmental Remediation Cost Data - Unit Price*; R. S. Means Company, Kingston, Massachusetts.

U. S. Environmental Protection Agency, July 2003, *Arsenic Treatment Technology Evaluation Handbook for Small Systems*, Table ES-1, page iv.

_____, July 2003, *Arsenic Treatment Technology Evaluation Handbook for Small Systems*, 13p.

FIGURES

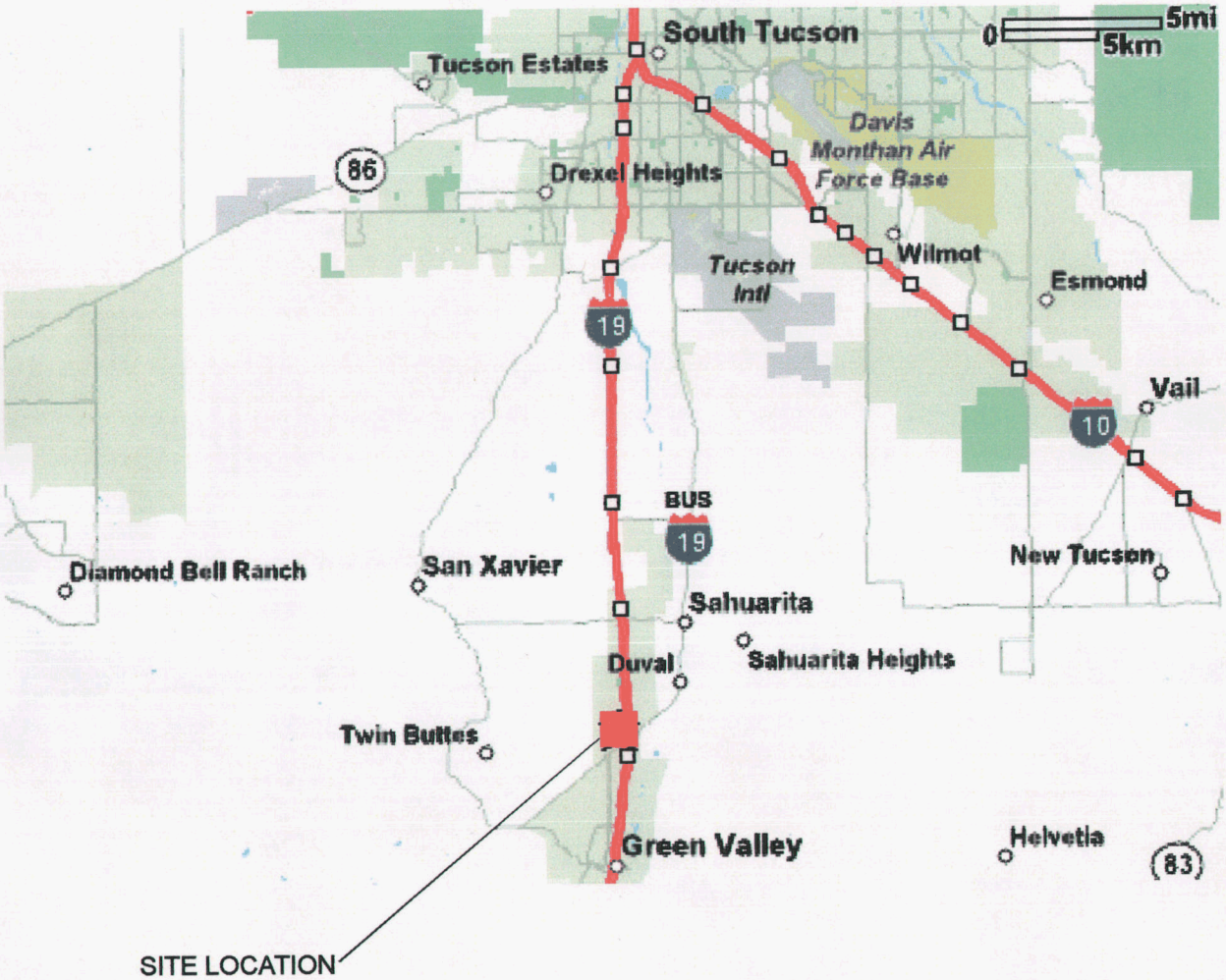

© 2005 MapQuest.com,Inc

0 5 10

Approximate Scale:
1 inch = 10km

Note: All boundaries and locations approximate.

MILLER BROOKS Environmental, Inc.	LAS QUINTAS SERENAS WATER COMPANY'S THREE WELLS SAHUARITA, ARIZONA 85629			
SITE LOCATION MAP				FIGURE 1
PROJECT:# 635-0001-01	FILE#: 0001map1	DATE DRAWN: 06/27/05	DRAWN BY: J. HIGH	

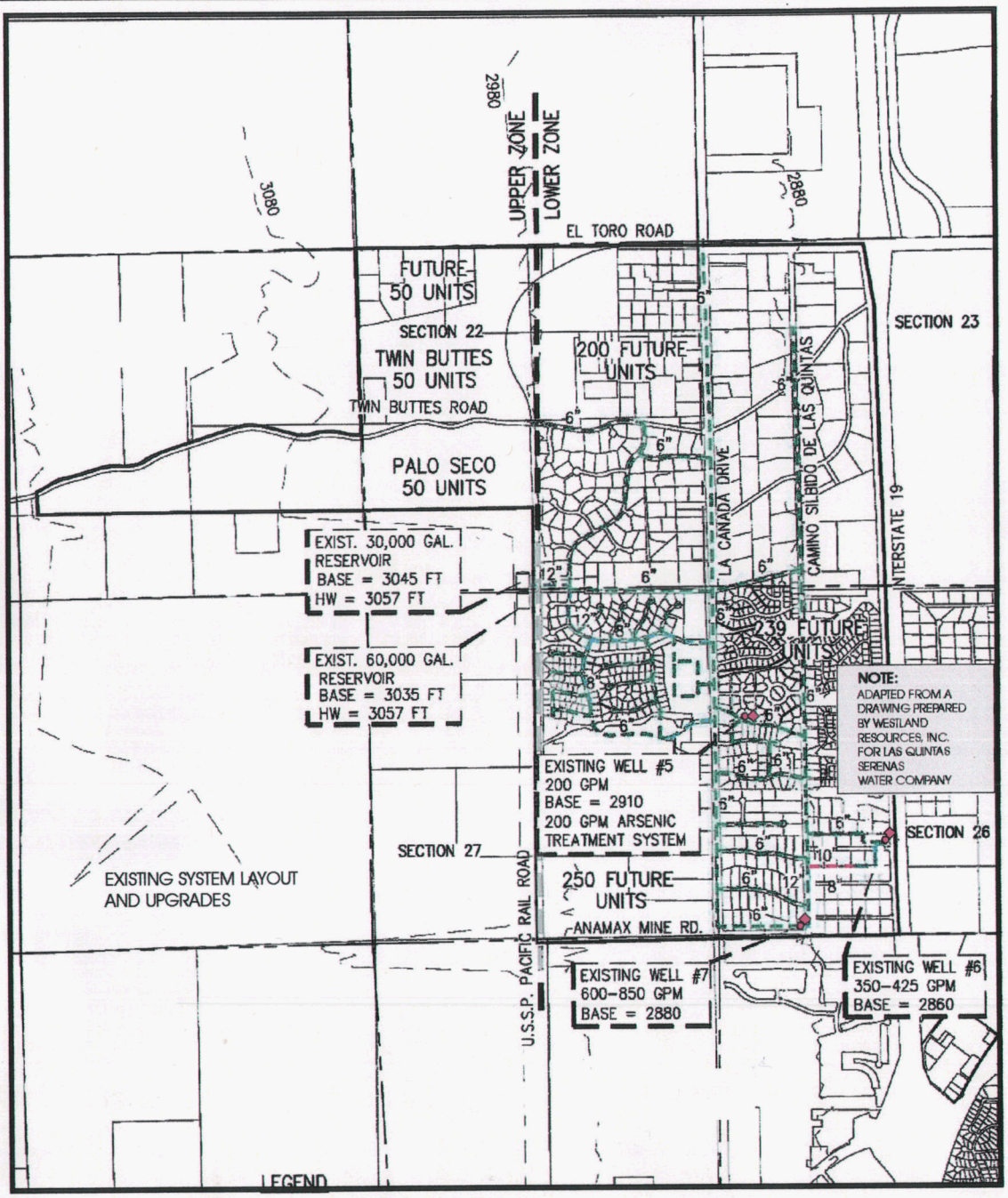

Note: All boundaries and locations approximate.

MILLER BROOKS Environmental, Inc.

LAS QUINTAS SERENAS WATER COMPANY'S THREE WELLS
SAHUARITA, ARIZONA 85629

WATER SYSTEM INFRASTRUCTURE

FIGURE 2

PROJECT:#	FILE#:	DATE DRAWN:	DRAWN BY:
635-0001-01	0001sp002	06/27/05	J. HIGH

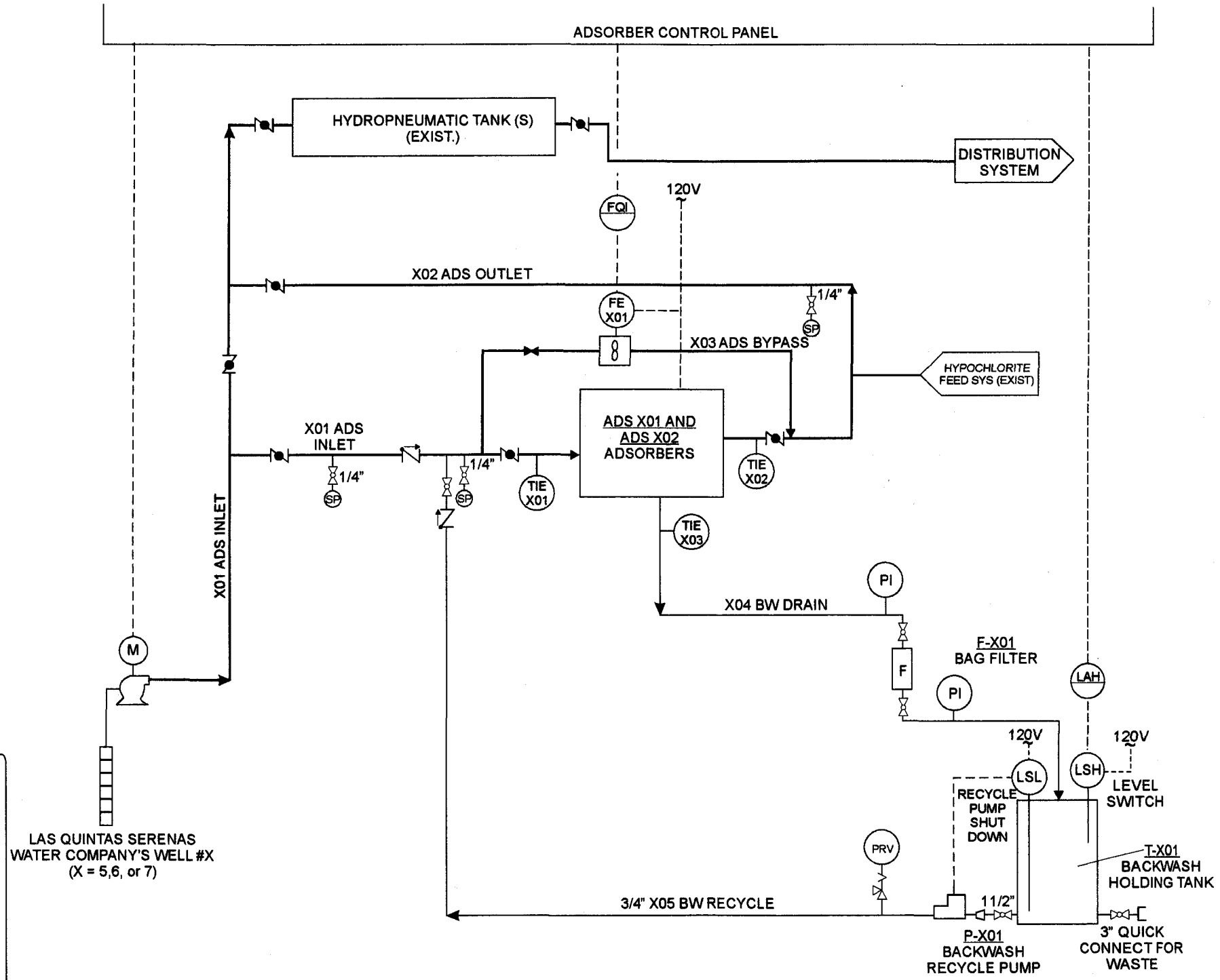

NOTES:

1. THE BASIC CONFIGURATION SHOWN IS TYPICAL FOR THE TREATMENT SYSTEM FOR EACH WELL.
2. SEE TABLE 1 FOR PIPING AND EQUIPMENT DESCRIPTIONS (SIZES, MATERIALS OF CONSTRUCTION, ETC.)

LEGEND

- TIE — Service Connection
- Pressure Relief Valve
- Check Value
- Butterfly Valve
- Ball Valve
- Globe Valve
- Flow Element
- F — Filter
- Flow Direction
- Pump
- Piping Reducer
- Metering Pump
- SP — Sample Port
- FQ — Flow Totalizing Indicator
- LSH — Level SW High
- LSL — Level SW Low
- PI — Pressure Indicator
- FE — Flow Element
- PRV — Pressure Relief Valve
- Electric Power or Control Line

MILLER BROOKS Environmental, Inc.

LAS QUINTAS SERENAS WATER COMPANY'S THREE WELLS
SAHUARITA, ARIZONA 85629

PROPOSED ARSENIC REDUCTION SYSTEM PROCESS AND INSTRUMENT DIAGRAM

FIGURE 3

PROJECT:#	FILE:#	DATE DRAWN:	DRAWN BY:
635-0001-01	0001sch001	06/21/05	J. HIGH

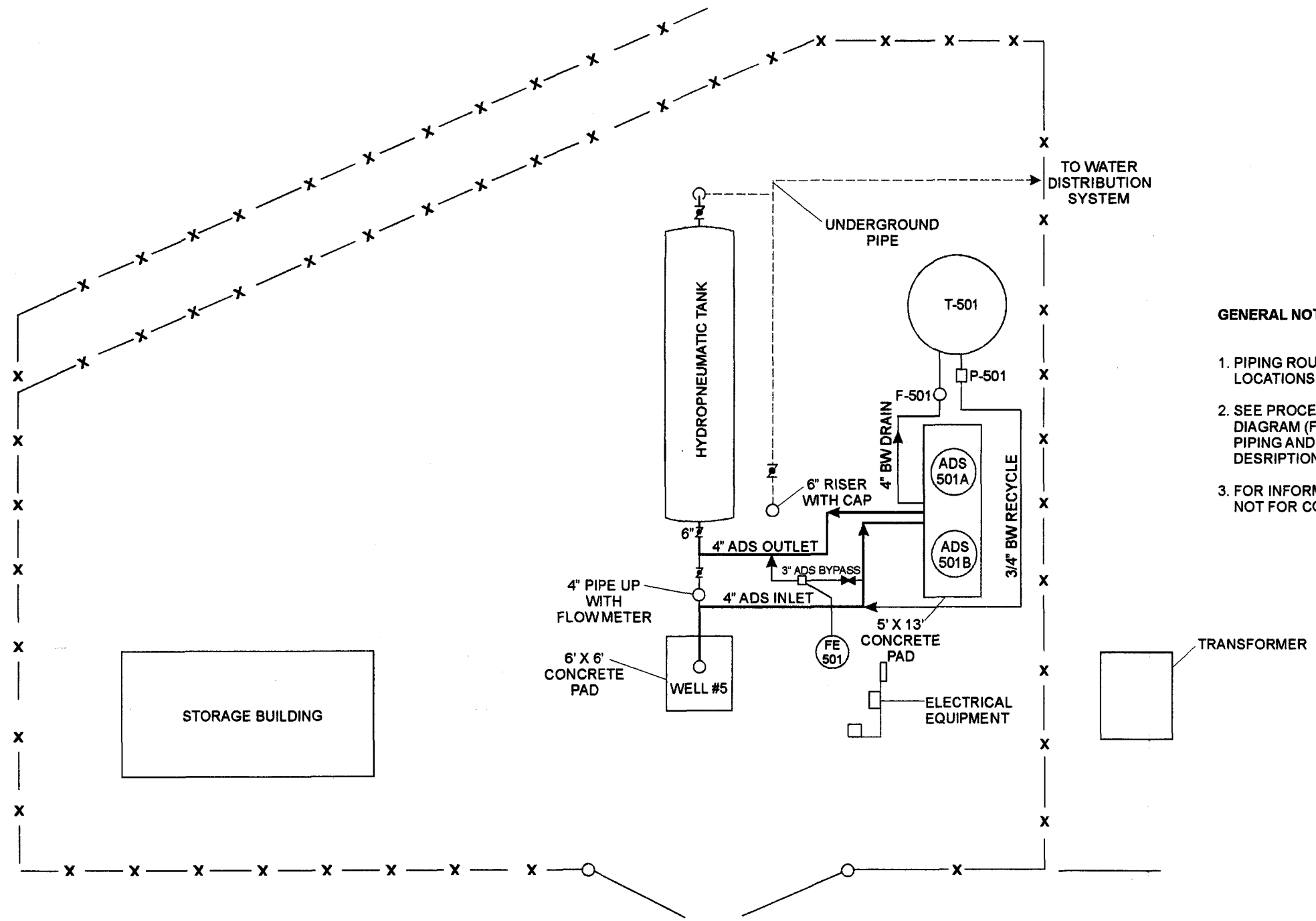

GENERAL NOTES:

1. PIPING ROUTING AND EQUIPMENT LOCATIONS ARE APPROXIMATE.
2. SEE PROCESS AND INSTRUMENTATION DIAGRAM (FIGURE 3) AND PIPING AND EQUIPMENT DESRIPTIONS (TABLE 1) FOR DETAILS.
3. FOR INFORMATION PURPOSES ONLY - NOT FOR CONSTRUCTION.

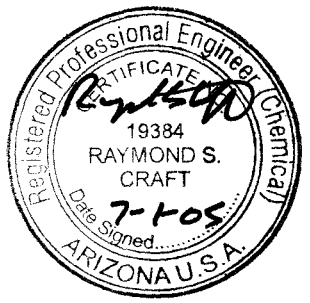

0 5 10

Approximate Scale:
1 inch = 10 feet

Note: All boundaries and locations approximate.

MILLER BROOKS Environmental, Inc.

LAS QUINTAS SERENAS
WATER COMPANY'S THREE WELLS
SAHUARITA, ARIZONA 85629

PROPOSED ARSENIC REDUCTION SYSTEM
WELL NO. 5 PIPING SCHEMATIC

FIGURE 4

PROJECT:#	FILE:#	DATE DRAWN:	DRAWN BY:
635-0001-01	0001well001	06/21/05	J. HIGH

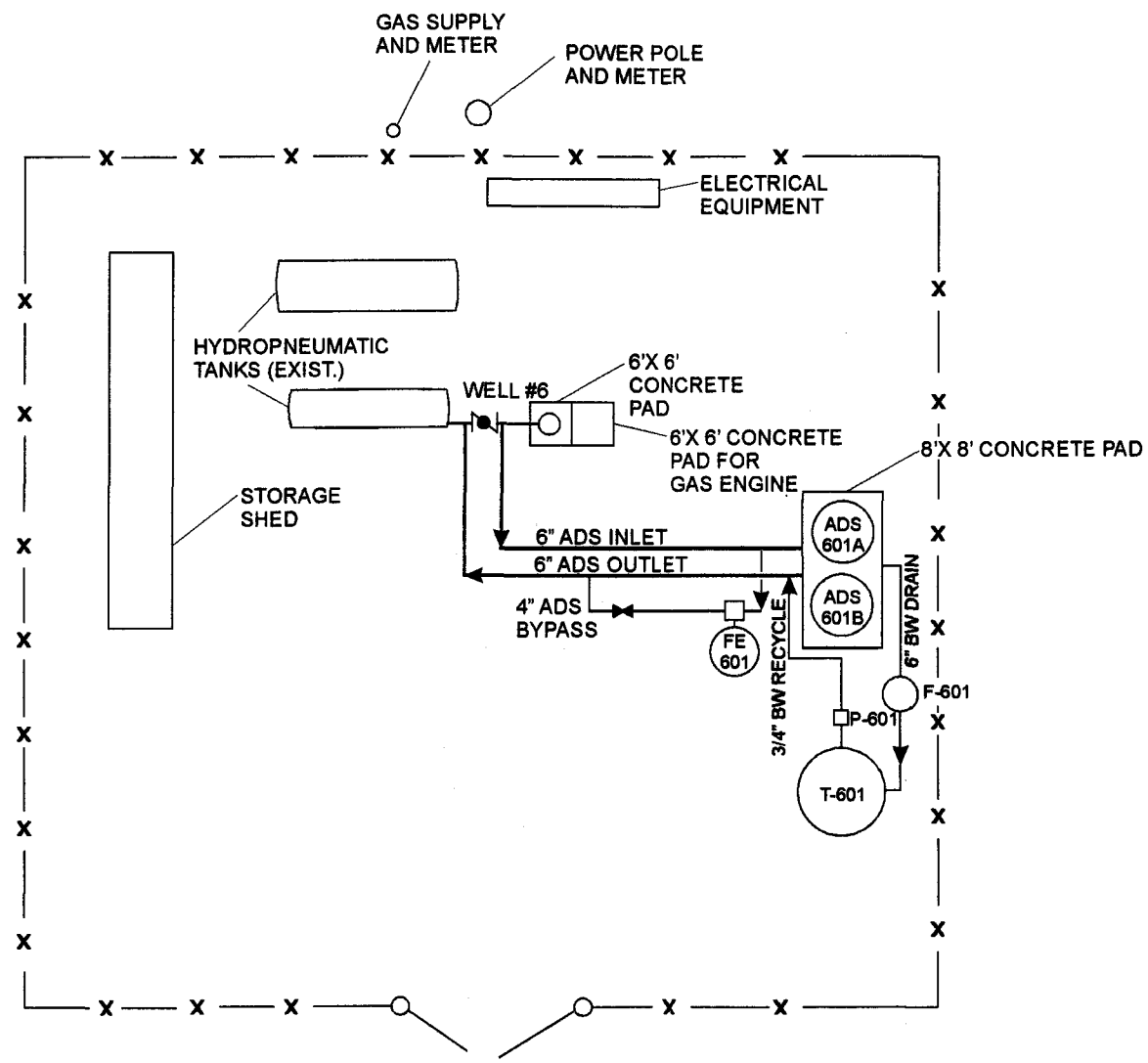

GENERAL NOTES:

1. PIPING ROUTING AND EQUIPMENT LOCATIONS ARE APPROXIMATE.
2. SEE PROCESS AND INSTRUMENTATION DIAGRAM (FIGURE 3) AND PIPING AND EQUIPMENT DESCRIPTIONS (TABLE 1) FOR DETAILS.
3. VALVES AT WELL #6 AND HYDROPNEUMATIC TANK AND WATER DISTRIBUTION PIPING NOT SHOWN.
4. FOR INFORMATIONAL PURPOSES ONLY - NOT FOR CONSTRUCTION.

0 10 20

Approximate Scale:
1 inch = 20 feet

Note: All boundaries and locations approximate.

MILLER BROOKS Environmental, Inc.

LAS QUINTAS SERENAS
WATER COMPANY'S THREE WELLS
SAHUARITA, ARIZONA 85629

PROPOSED ARSENIC REDUCTION SYSTEM
WELL NO. 6 PIPING SCHEMATIC

FIGURE 5

PROJECT:#	FILE:#	DATE DRAWN:	DRAWN BY:
635-0001-01	0001well002	06/21/05	J. HIGH

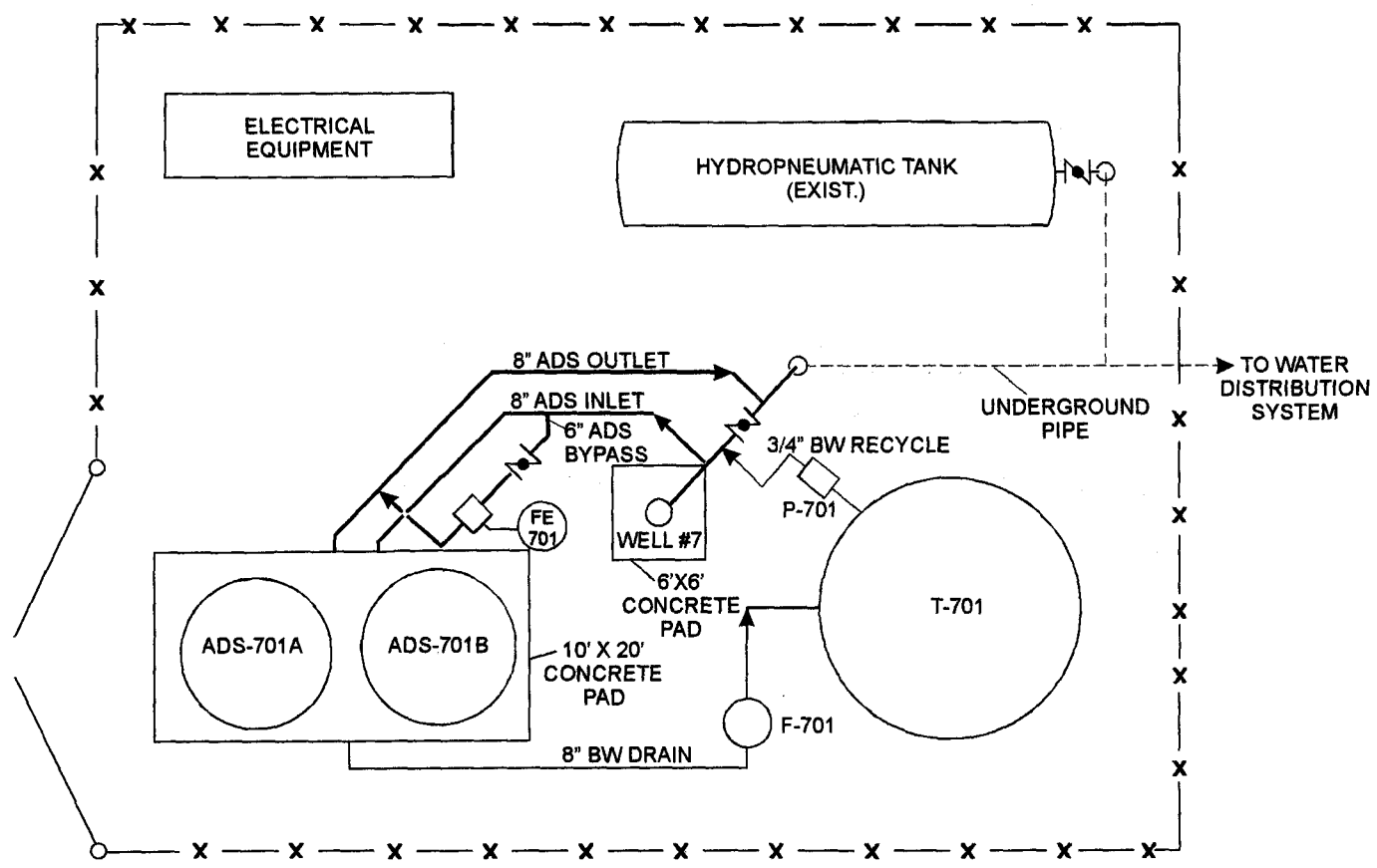

GENERAL NOTES:

1. PIPING ROUTING AND EQUIPMENT LOCATIONS ARE APPROXIMATE.
2. SEE PROCESS AND INSTRUMENTATION DIAGRAM (FIGURE 3) AND PIPING AND EQUIPMENT DESCRIPTIONS (TABLE 1) FOR DETAILS.
3. FOR INFORMATIONAL PURPOSES ONLY - NOT FOR CONSTRUCTION.

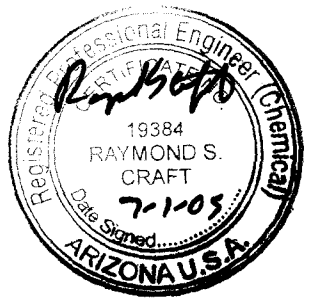

0 10 20

Approximate Scale:
1 inch = 20 feet

Note: All boundaries and locations approximate.

MILLER BROOKS Environmental, Inc.

LAS QUINTAS SERENAS
WATER COMPANY'S THREE WELLS
SAHUARITA, ARIZONA 85629

PROPOSED ARSENIC REDUCTION SYSTEM
WELL NO. 7 PIPING SCHEMATIC

FIGURE 6

PROJECT:#	FILE:#	DATE DRAWN:	DRAWN BY:
635-0001-01	0001well003	06/21/05	J. HIGH

TABLES

TABLE 2
Las Quintas Serenas Water Company's Three Wells
Arsenic Reduction System
Piping and Equipment Descriptions

PIPING			
WELL NO. 5			
LINE NO.	DESCRIPTION	CONNECTION TYPE (at APU)	SIZE AND MATERIAL
501	ADSORBER INLET	ANSI 150# FLANGE	4" DUCTILE IRON
502	ADSORBER OUTLET	ANSI 150# FLANGE	4" DUCTILE IRON
503	BACKWASH DRAIN	ANSI 150# FLANGE	4" PVC, SCH. 80
504	TREATMENT BYPASS	N/A	3" DUCTILE IRON
505	BACKWASH RECYCLE	1-1/2" NPT (at tank)	3/4" PVC, SCH. 80
WELL NO. 6			
LINE NO.	DESCRIPTION	CONNECTION TYPE (at APU)	SIZE AND MATERIAL
601	ADSORBER INLET	ANSI 150# FLANGE	6" DUCTILE IRON
602	ADSORBER OUTLET	ANSI 150# FLANGE	6" DUCTILE IRON
603	BACKWASH DRAIN	ANSI 150# FLANGE	6" PVC, SCH. 80
604	TREATMENT BYPASS	N/A	4" DUCTILE IRON
605	BACKWASH RECYCLE	1-1/2" NPT (at tank)	3/4" PVC, SCH. 80
WELL NO. 7			
LINE NO.	DESCRIPTION	CONNECTION TYPE (at APU)	SIZE AND MATERIAL
701	ADSORBER INLET	ANSI 150# FLANGE	8" DUCTILE IRON
702	ADSORBER OUTLET	ANSI 150# FLANGE	8" DUCTILE IRON
703	BACKWASH DRAIN	ANSI 150# FLANGE	8" PVC, SCH. 80
704	TREATMENT BYPASS	N/A	6" DUCTILE IRON
705	BACKWASH RECYCLE	1-1/2" NPT (at tank)	3/4" PVC, SCH. 80
EQUIPMENT			
WELL NO. 5			
EQUIPMENT NO.	DESCRIPTION	MANUF. & MODEL NO.	SIZE AND MATERIAL
ADS-501A & ADS-501B	ADSORBERS	AdEdge Technologies, APU-160	2 Vessels, 4 ft diameter, FRP
F-501	BAG FILTERS	FSI, FSPN-85	2" Inlet/Outlet, 316SS
P-501	BACKWASH RECYCLE PUMP	Prominent Pumps, Sigma 1	38 gph @ 58 psig
T-501	BACKWASH TANK	PolyProcessing Co., #1104050	4,050 gal., HDXLPE[1]
WELL NO. 6			
EQUIPMENT NO.	DESCRIPTION	MANUF. & MODEL NO.	SIZE AND MATERIAL
ADS-601A & ADS-601B	ADSORBERS	Severn Trent, EAS-1606	2 Vessels, 6 ft diameter, Steel
F-601	BAG FILTERS	FSI, FSPN-355	4" Inlet/Outlet, 316SS
P-601	BACKWASH RECYCLE PUMP	Prominent Pumps, Sigma/2	111 gph @ 58 psig
T-601	BACKWASH TANK	PolyProcessing Co., #1108050	8,050 gal., HDXLPE[1]
WELL NO. 7			
EQUIPMENT NO.	DESCRIPTION	MANUF. & MODEL NO.	SIZE AND MATERIAL
ADS-701A & ADS-701B	ADSORBERS	Severn Trent, EAS-3008	2 Vessels, 8 ft diameter, Steel
F-701	BAG FILTERS	FSI, FSPN-1100	6" Inlet/Outlet, 316SS
P-701	BACKWASH RECYCLE PUMP	Prominent Pumps, Sigma/3	264 gph @ 58 psig
T-701	BACKWASH TANK	PolyProcessing Co., #11014950	14,950 gal., HDXLPE[1]

Notes: [1] - High Density Cross Linked Polyethylene

TABLE 3
Las Quintas Serenas' Three Wells
Arsenic Removal System
Engineer's Opinion of Probable Cost

	Well No. 5	Well No. 6	Well No. 7	Totals
Arsenic Treatment System	$ 149,074.97	$ 246,692.37	$ 316,233.09	$ 712,000.42
Design	$ 11,926.00	$ 17,268.47	$ 18,973.99	$ 48,168.45
0	$ 5,963.00	$ 8,634.23	$ 9,486.99	$ 24,084.22
Construction Inspections and Redlines	$ 4,472.25	$ 6,167.31	$ 6,324.66	$ 16,964.22
Contingencies	$ 14,907.00	$ 24,669.00	$ 31,623.00	$ 71,199.00
Total	**$ 186,343.21**	**$ 303,431.38**	**$ 382,641.73**	**$ 872,416.31**
Equipment	$ 121,543.73	$ 218,984.58	$ 284,522.98	$ 625,051.29
Concrete/Site Work/Building	$ 5,963.80	$ 3,656.56	$ 4,835.50	$ 14,455.86
Piping	$ 12,887.44	$ 15,371.23	$ 18,194.61	$ 46,453.27
Electrical	$ 8,680.00	$ 8,680.00	$ 8,680.00	$ 26,040.00
Arsenic Treatment System Cost Breakdown:	**$ 149,074.97**	**$ 246,692.37**	**$ 316,233.09**	**$ 712,000.42**

TABLE 3
Las Quintas Serenas' Three Wells
Arsenic Removal System
Engineer's Opinion of Probable Cost

Well No 5

Well No. 5

Item	Quantity	Unit	Unit Price Labor	Unit Price Equip.	Unit Price Material	Unit Cost (w/o mu)	mu (GC, OH & P)	Unit Cost	Total Costs Labor	Total Costs Equipment	Total Costs Material	Total Costs Total
Arsenic Treatment System												
Site Work												
Concrete pad for equipment (8' x 15' by 1' thick)	120	SF	5.54	0.86	10.44	$ 16.84	1.25	$ 21.05	$ 831.60	$ 129.15	$ 1,565.55	$ 2,526.30
Equipment Shade/Cover	1	EA	750.00		1,500.00	$ 2,250.00	1.25	$ 2,812.50	$ 937.50	$ -	$ 1,875.00	$ 2,812.50
Painting (piping and structural steel only)	1	Job			500.00	$ 500.00	1.25	$ 625.00	$ -	$ -	$ 625.00	$ 625.00
Equipment						$ -						$ 5,963.80
Arsenic Treatment System (without backwash recycle)	1	EA			97,500.00	$ 97,500.00	1.00	$ 97,500.00	$ -	$ -	$ 97,500.00	$ 97,500.00
Arsenic Treatment System Installation	1	EA	2,648.10			$ 2,648.10	1.00	$ 2,648.10	$ 2,648.10	$ -	$ -	$ 2,648.10
Auxiliary Equipment	1	EA			6,500.00	$ 6,500.00	1.00	$ 6,500.00	$ -	$ -	$ 6,500.00	$ 6,500.00
Startup Assistance & Acceptance (from Equipment Supplier)	1	Lot	1,800.00			$ 1,800.00	1.00	$ 1,800.00	$ 1,800.00	$ -	$ -	$ 1,800.00
Backwash tank (4,050-gallon Vertical XPLE Tank) with IFMO tank pad and access ladder	1	EA	1,050.00	189.00	7,486.67	$ 8,725.67	1.00	$ 8,725.67	$ 1,050.00	$ 189.00	$ 7,486.67	$ 8,725.67
Backwash Filter (FSI FSPN 85)	1	EA	532.35	100.00	1,700.00	$ 2,332.35	1.00	$ 2,332.35	$ 532.35	$ 100.00	$ 1,700.00	$ 2,332.35
Backwash Recycle Pump (Prominent Sigma 1)	1	EA	532.35		1,400.00	$ 1,932.35	1.00	$ 1,932.35	$ 532.35	$ -	$ 1,400.00	$ 1,932.35
Bases for Backwash Filter and Pump	10	SF	2.77	0.43	5.22	$ 8.42		$ 10.53	$ 34.65	$ 5.38	$ 65.23	$ 105.26
Piping						$ -						$ 121,543.73
Adsorber Inlet Piping (4" DIP)	50	FT	7.16	0.57	8.23	$ 15.96	1.25	$ 19.95	$ 447.56	$ 35.44	$ 514.50	$ 997.50
Adsorber Outet Piping (4" DIP)	50	FT	7.16	0.57	8.23	$ 15.96	1.25	$ 19.95	$ 447.56	$ 35.44	$ 514.50	$ 997.50
Adsorber Bypass Piping (4" DIP)	20	FT	7.16	0.57	8.23	$ 15.96	1.25	$ 19.95	$ 179.03	$ 14.18	$ 205.80	$ 399.00
Bypass Flowmeter (Allowance)	1	EA	525.00		2,000.00	$ 2,525.00	1.25	$ 3,156.25	$ 656.25	$ -	$ 2,500.00	$ 3,156.25
Valves 4" steel butterfly valves	6	EA	145.95		150.00	$ 295.95	1.25	$ 369.94	$ 1,094.63	$ -	$ 1,125.00	$ 2,219.63
Valves 4" iron body check valves	1	EA	77.70		317.10	$ 394.80	1.25	$ 493.50	$ 97.13	$ -	$ 396.38	$ 493.50
Backwash piping to backwash tank (4" PVC Schedule 80)	50	FT	9.72	0.47	2.51	$ 12.71	1.25	$ 15.88	$ 607.69	$ 29.53	$ 156.84	$ 794.06
Valves 3" PVC Ball valves	2	EA	50.00		87.15	$ 137.15	1.25	$ 171.44	$ 125.00	$ -	$ 217.88	$ 342.88
Valves 1/4" PVC Ball valves	5	EA	25.00		20.00	$ 45.00	1.25	$ 56.25	$ 156.25	$ -	$ 125.00	$ 281.25
3/4" PVC Schedule 80 piping from backwash tank (backwash recycle)	100	FT	9.21	0.81	0.63	$ 10.65	1.25	$ 13.31	$ 1,151.06	$ 101.06	$ 78.75	$ 1,330.88
Piping Specialties (pressure gauges, relief valve etc.)	1	Lot			500.00	$ 500.00	1.25	$ 625.00	$ -	$ -	$ 625.00	$ 625.00
Piping Supports	1	Lot			1,000.00	$ 1,000.00	1.25	$ 1,250.00	$ -	$ -	$ 1,250.00	$ 1,250.00
Electrical						$ -						$ 12,887.44
Electrical power supply (120 VAC, single phase, conduit and wiring) to equipment	1	Lot	1,250.00		1,250.00	$ 2,500.00	1.25	$ 3,125.00	$ 1,562.50	$ -	$ 1,562.50	$ 3,125.00
Level controls (high/low level switches) for Backwash tank	1	EA	300.00		1,144.00	$ 1,444.00	1.25	$ 1,805.00	$ 375.00	$ -	$ 1,430.00	$ 1,805.00
Electrical conduit and wiring to backwash tank switches, recycle pump, and flowmeter (from control panel)	200	LF	7.50		7.50	$ 15.00	1.25	$ 18.75	$ 1,875.00	$ -	$ 1,875.00	$ 3,750.00
												$ 8,680
	Subtotal											**$ 149,074.97**
Installation Cost									**$ 17,141.20**	**$ 639.18**	**$ 131,294.59**	**$ 149,074.97**
Design	8.0%											$ 11,926.00
Permitting	4.0%											$ 5,963.00
Construction Inspections and Redlines	3.0%											$ 4,472.25
Contingencies	10%											$ 14,907.00
	Total											**$ 186,343.21**

6/30/2005

TABLE 3
Las Quintas Serenas' Three Wells
Arsenic Removal System
Engineer's Opinion of Probable Cost

Well No. 6

Item	Quantity	Unit	Unit Price Labor	Unit Price Equip.	Unit Price Material	Unit Cost (w/o mu)	mu (GC, OH & P)	Unit Cost	Total Costs Labor	Total Costs Equipment	Total Costs Material	Total Costs Total
Arsenic Treatment System												
Site Work												
Concrete pad for equipment (8' x 18' by 1' thick)	144	SF	5.54	0.86	10.44	$ 16.84	1.25	$ 21.05	$ 997.92	$ 154.98	$ 1,878.66	$ 3,031.56
Painting (piping and structural steel only)	1	Job			500.00	$ 500.00	1.25	$ 625.00	$ -	$ -	$ 625.00	$ 625.00
Equipment						$ -						$ 3,656.56
Arsenic Treatment System (without backwash recycle)	1	EA			181,500.00	$ 181,500.00	1.00	$ 181,500.00	$ -	$ -	$ 181,500.00	$ 181,500.00
Arsenic Treatment System Installation	1	EA	5,000.00			$ 5,000.00	1.00	$ 5,000.00	$ 5,000.00	$ -	$ -	$ 5,000.00
Auxiliary Equipment	1	EA			6,500.00	$ 6,500.00	1.00	$ 6,500.00	$ -	$ -	$ 6,500.00	$ 6,500.00
Startup Assistance & Acceptance (from Equipment Supplier)	1	Lot	1,800.00			$ 1,800.00	1.00	$ 1,800.00	$ 1,800.00	$ -	$ -	$ 1,800.00
Backwash tank (8,050-gallon Vertical XPLE Tank) with IFMO tank pad and access ladder	1	EA	1,260.00	216.30	12,006.67	$ 13,482.97	1.00	$ 13,482.97	$ 1,260.00	$ 216.30	$ 12,006.67	$ 13,482.97
Backwash Filter (FSI FSPN 355)	1	EA	900.00	150.00	7,000.00	$ 8,050.00	1.00	$ 8,050.00	$ 900.00	$ 150.00	$ 7,000.00	$ 8,050.00
Backwash Recycle Pump (Prominent Sigma 2)	1	EA	532.35		2,014.00	$ 2,546.35	1.00	$ 2,546.35	$ 532.35	$ -	$ 2,014.00	$ 2,546.35
Bases for Backwash Filter and Pump	10	SF	2.77	0.43	5.22	$ 8.42		$ 10.53	$ 34.65	$ 5.38	$ 65.23	$ 105.26
Piping						$ -						$ 218,984.58
Adsorber Inlet Piping (6" DIP)	50	FT	10.47	0.82	9.52	$ 20.81	1.25	$ 26.01	$ 654.28	$ 51.19	$ 595.22	$ 1,300.69
Adsorber Outet Piping (6" DIP)	50	FT	10.47	0.82	9.52	$ 20.81	1.25	$ 26.01	$ 654.28	$ 51.19	$ 595.22	$ 1,300.69
Adsorber Bypass Piping (6" DIP)	20	FT	10.47	0.82	9.52	$ 20.81	1.25	$ 26.01	$ 261.71	$ 20.48	$ 238.09	$ 520.28
Bypass Flowmeter (Allowance)	1	EA	525.00		2,000.00	$ 2,525.00	1.25	$ 3,156.25	$ 656.25	$ -	$ 2,500.00	$ 3,156.25
Valves 6" steel butterfly valves	6	EA	117.60		244.00	$ 361.60	1.25	$ 452.00	$ 882.00	$ -	$ 1,830.00	$ 2,712.00
Valves 6" iron body check valves	1	EA	117.60		558.60	$ 676.20	1.25	$ 845.25	$ 147.00	$ -	$ 698.25	$ 845.25
Backwash piping to backwash tank (6" PVC Schedule 80)	50	FT	15.75	0.71	6.30	$ 22.76	1.25	$ 28.45	$ 984.38	$ 44.30	$ 393.75	$ 1,422.42
Valves 4" PVC Butterfly valves	2	EA	75.00		155.40	$ 230.40	1.25	$ 288.00	$ 187.50	$ -	$ 388.50	$ 576.00
Valves 1/4" PVC Ball valves	5	EA	25.00		20.00	$ 45.00	1.25	$ 56.25	$ 156.25	$ -	$ 125.00	$ 281.25
3/4" PVC Schedule 80 piping from backwash tank (backwash recycle)	100	FT	9.21	1.21	0.63	$ 11.05	1.25	$ 13.81	$ 1,151.06	$ 151.59	$ 78.75	$ 1,381.41
Piping Specialties (pressure gauges, relief valve etc.)	1	Lot			500.00	$ 500.00	1.25	$ 625.00	$ -	$ -	$ 625.00	$ 625.00
Piping Supports	1	Lot			1,000.00	$ 1,000.00	1.25	$ 1,250.00	$ -	$ -	$ 1,250.00	$ 1,250.00
Electrical						$ -						$ 15,371.23
Electrical power supply (120 VAC, single phase, conduit and wiring) to equipment	1	Lot	1,250.00		1,250.00	$ 2,500.00	1.25	$ 3,125.00	$ 1,562.50	$ -	$ 1,562.50	$ 3,125.00
Level controls (high/low level switches) for Backwash tank	1	EA	300.00		1,144.00	$ 1,444.00	1.25	$ 1,805.00	$ 375.00	$ -	$ 1,430.00	$ 1,805.00
Electrical conduit and wiring to backwash tank switches, recycle pump, and flowmeter (from control panel)	200	LF	7.50		7.50	$ 15.00	1.25	$ 18.75	$ 1,875.00	$ -	$ 1,875.00	$ 3,750.00
												$ 8,680
	Subtotal											**$ 246,692.37**
Installation Cost	7.0%								$ 20,072.13	$ 845.40	$ 225,774.83	**$ 246,692.37**
Design	3.5%											$ 17,268.47
Permitting	2.5%											$ 8,634.23
Construction Inspections and Redlines	10%											$ 6,167.31
Contingencies												$ 24,669.00
	Total											**$ 303,431.38**

TABLE 3
Las Quintas Serenas' Three Wells
Arsenic Removal System
Engineer's Opinion of Probable Cost

Well No. 7

Item	Quantity	Unit	Unit Price Labor	Unit Price Equip.	Unit Price Material	Unit Cost (w/o mu)	mu (GC, OH & P)	Unit Cost	Total Costs Labor	Total Costs Equipment	Total Costs Material	Total
Arsenic Treatment System												
Site Work												
Concrete pad for equipment (10' x 20' by 1' thick)	200	SF	5.54	0.86	10.44	$ 16.84	1.25	$ 21.05	$ 1,386.00	$ 215.25	$ 2,609.25	$ 4,210.50
Painting (piping and structural steel only)	1	Job			500.00	$ 500.00	1.25	$ 625.00	$ -	$ -	$ 625.00	$ 625.00
Equipment						$ -						$ 4,835.50
Arsenic Treatment System (without backwash recycle)	1	EA			236,500.00	$ 236,500.00	1.00	$ 236,500.00	$ -	$ -	$ 236,500.00	$ 236,500.00
Arsenic Treatment System Installation	1	EA	5,000.00			$ 5,000.00	1.00	$ 5,000.00	$ 5,000.00	$ -	$ -	$ 5,000.00
Auxiliary Equipment	1	EA			6,500.00	$ 6,500.00	1.00	$ 6,500.00	$ -	$ -	$ 6,500.00	$ 6,500.00
Startup Assistance & Acceptance (from Equipment Supplier)	1	Lot	1,800.00			$ 1,800.00	1.00	$ 1,800.00	$ 1,800.00	$ -	$ -	$ 1,800.00
Backwash tank (14,950-gallon Vertical XPLE Tank) with IFMO tank pad and access ladder	1	EA	1,680.00	287.70	18,731.67	$ 20,699.37	1.00	$ 20,699.37	$ 1,680.00	$ 287.70	$ 18,731.67	$ 20,699.37
Backwash Filter (FSI FSPN 1100)	1	EA	1,200.00	200.00	8,600.00	$ 10,000.00	1.00	$ 10,000.00	$ 1,200.00	$ 200.00	$ 8,600.00	$ 10,000.00
Backwash Recycle Pump (Prominent Sigma 3)	1	EA	532.35		3,386.00	$ 3,918.35	1.00	$ 3,918.35	$ 532.35	$ -	$ 3,386.00	$ 3,918.35
Bases for Backwash Filter and Pump	10	SF	2.77	0.43	5.22	$ 8.42		$ 10.53	$ 34.65	$ 5.38	$ 65.23	$ 105.26
Piping						$ -						$ 284,522.98
Adsorber Inlet Piping (8" DIP)	50	FT	10.47	1.04	11.52	$ 23.03	1.25	$ 28.79	$ 654.28	$ 64.97	$ 720.30	$ 1,439.55
Adsorber Outet Piping (8" DIP)	50	FT	10.47	1.04	11.52	$ 23.03	1.25	$ 28.79	$ 654.28	$ 64.97	$ 720.30	$ 1,439.55
Adsorber Bypass Piping (8" DIP)	20	FT	10.47	1.04	11.52	$ 23.03	1.25	$ 28.79	$ 261.71	$ 25.99	$ 288.12	$ 575.82
Bypass Flowmeter (Allowance)	1	EA	525.00		2,000.00	$ 2,525.00	1.25	$ 3,156.25	$ 656.25	$ -	$ 2,500.00	$ 3,156.25
Valves 8" steel butterfly valves	6	EA	207.90		437.00	$ 644.90	1.25	$ 806.13	$ 1,559.25	$ -	$ 3,277.50	$ 4,836.75
Valves 8" iron body check valves	1	EA	207.90		994.35	$ 1,202.25	1.25	$ 1,502.81	$ 259.88	$ -	$ 1,242.94	$ 1,502.81
Backwash piping to backwash tank (6" PVC Schedule 80)	50	FT	13.61	0.95	5.02	$ 19.58	1.25	$ 24.47	$ 850.76	$ 59.06	$ 313.69	$ 1,223.51
Valves 6" PVC butterfly valves	2	EA	100.00		113.30	$ 213.30	1.25	$ 266.62	$ 250.00	$ -	$ 283.24	$ 533.24
Valves 1/4" PVC Ball valves	5	EA	25.00		20.00	$ 45.00	1.25	$ 56.25	$ 156.25	$ -	$ 125.00	$ 281.25
3/4" PVC Schedule 80 piping from backwash tank (backwash recycle)	100	FT	9.21	0.81	0.63	$ 10.65	1.25	$ 13.31	$ 1,151.06	$ 101.06	$ 78.75	$ 1,330.88
Piping Specialties (pressure gauges, relief valve etc.)	1	Lot			500.00	$ 500.00	1.25	$ 625.00	$ -	$ -	$ 625.00	$ 625.00
Piping Supports	1	Lot			1,000.00	$ 1,000.00	1.25	$ 1,250.00	$ -	$ -	$ 1,250.00	$ 1,250.00
Electrical						$ -						$ 18,194.61
Electrical power supply (120 VAC, single phase, conduit and wiring) to equipment	1	Lot	1,250.00		1,250.00	$ 2,500.00	1.25	$ 3,125.00	$ 1,562.50	$ -	$ 1,562.50	$ 3,125.00
Level controls (high/low level switches) for Backwash tank	1	EA	300.00		1,144.00	$ 1,444.00	1.25	$ 1,805.00	$ 375.00	$ -	$ 1,430.00	$ 1,805.00
Electrical conduit and wiring to backwash tank switches, recycle pump, and flowmeter (from control panel)	200	LF	7.50		7.50	$ 15.00	1.25	$ 18.75	$ 1,875.00	$ -	$ 1,875.00	$ 3,750.00
												$ 8,680
Installation Cost	**Subtotal**											**$ 316,233.09**
Design	6.0%								$ 21,899.23	$ 1,024.38	$ 293,309.48	**$ 316,233.09**
Permitting	3.0%											$ 18,973.99
Construction Inspections and Redlines	2.0%											$ 9,486.99
Contingencies	10%											$ 6,324.66
												$ 31,623.00
	Total											**$ 382,641.73**

6/30/2005

TABLE 4

Estimated Capital and O&M Cost Summaries for Arsenic Treatment Systems
Las Quintas Serenas Water Company's Three Wells

Treatment Location	Arsenic Removal Technology	Equipment Supplier	Capital Cost[1]	Installed Cost[2]	Annual O&M Costs		
					Media[3]	O&M Labor[4]	Total O&M Cost
Well No. 5	Granular Iron Oxide	Severn Trent	$121,544	$149,075	$4,100	$1,000	$5,100
Well No. 6	Granular Iron Oxide	Severn Trent	$218,985	$246,692	$17,800	$1,000	$18,800
Well No. 7	Granular Iron Oxide	Severn Trent	$284,523	$316,233	$22,900	$1,000	$23,900
		Totals:	**$625,051**	**$712,000**	**$44,800**	**$3,000**	**$47,800**

[1] - Includes backwash recovery equipment

[2] - Does not design, permitting, construction inspections/redlines, and contingencies

[3] - From Arsenic Removal System Sizing and Estimate Summaries (see Appendix A)

[4] - Based on 2 hours per week and 50 weeks per year. Assumed General Hourly Labor Cost: $20

APPENDICES

APPENDIX A

ARSENIC REMOVAL SYSTEM SIZING AND ESTIMATE SUMMARIES

SEVERN TRENT SERVICES

Filtration Products

SORB 33™ Arsenic Removal System

The SORB 33™ arsenic removal system from Severn Trent Services is economical, simple to operate and requires virtually no labor. In this simple pump-and-treat adsorption system, the contaminated water passes through a robust granular ferric oxide media, Bayoxide® E33. As water passes through the media, arsenic is adsorbed and removed to a level below the 5 micrograms per liter (µg/l). The SORB 33 system requires no cleaning, no regeneration and no complex, labor-intensive steps.

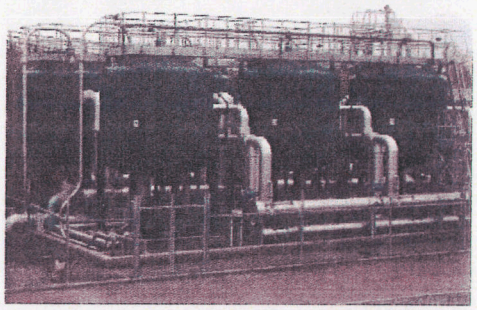

The dry, crystalline Bayoxide E33 media was designed with a high capacity for arsenic, providing long operating cycles and low operating costs. The media's life expectancy is dependent on site-specific water quality and operating levels. The exhausted media is non-hazardous and can be sent to a landfill, passing TCLP requirements.

The SORB 33 systems range in capacity from 50 GPM to 1,220 GPM and are designed with an EBCT range of 3.3 - 4.5 minutes.

Features:

- Removes both As (III) and As (V) below 5 µg/l
- Robust dry media with high capacity for arsenic
- Long media life under continuous operation
- Very low residual effluents: <0.1% of water treated
- No re-pumping
- No chemicals for regeneration
- Low maintenance- no moving parts
- Small footprint
- NSF Standard 61 and DWI approved media

Benefits:

- Low capital costs
- Low operating costs
- Readily available media in any quantity
- Easy disposal of spent media- no hazardous waste generated
- Low extractables
- Low shipping cost and long shelf life of dry media
- Unattended operation- no manpower required

Bayoxide E33 is a registered trademark of Bayer AG.

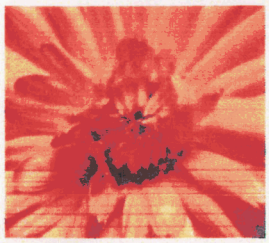

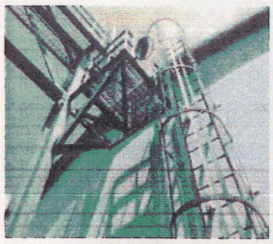

Model	Flow Rate	Adsorptive Media	Vessel Size
SORB 33 Model EAS-0804	80 – 100 GPM	45 ft^3	4' ∅
SORB 33 Model EAS-1205	120 – 160 GPM	71 ft^3	5' ∅
SORB 33 Model EAS-1606	170 – 230 GPM	102 ft^3	6' ∅
SORB 33 Model EAS-3008	300 – 400 GPM	181 ft^3	8' ∅
SORB 33 Model EAS-4710	470 – 630 GPM	283 ft^3	10' ∅
SORB 33 Model EAS-6812	680 – 900 GPM	407 ft^3	12' ∅
SORB 33 Model EAS-9014	920 – 1220 GPM	554 ft^3	14' ∅
SORB 33 Model APU-50	50 GPM	27 ft^3	30" Dia x 72" Hgt
SORB 33 Model APU-100	100 GPM	50 ft^3	42" Dia x 72" Hgt
SORB 33 Model APU-160	160 GPM	80 ft^3	48" Dia x 72" Hgt
SORB 33 Model APU-300	300 GPM	152 ft^3	63" Dia x 86" Hgt

Adsorption Flow Diagram – Basic Treatment System

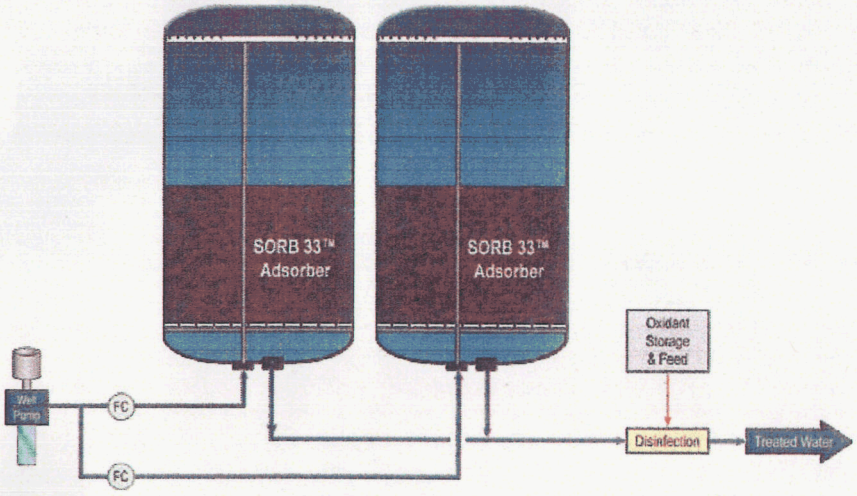

Bayoxide® E33 Media

- Chemical Designation: Synthetic Iron Oxide
- Fe_2O_3 Content >70%
- Specific Surface Area: 120 – 200 m2 /g
- Sieve Analysis: <0.5 mm, 20 % max.
  >2.0 mm, 5% max
- Density: Approx. 3.6 gm/cm3
- NSF Standard 61 and DWI Approved

Severn Trent Services
5415 W. Sligh Avenue, Suite 102
Tampa, FL 33634
Tel 813 886 9331
Toll-free 800 364 3931
Fax 813 886 0651
info@severntrentservices.com
www.severntrentservices.com

Severn Trent Services (UK)
Park Lane, Minworth
Sutton Coldfield, B76 9BL
United Kingdom
Tel +44 (0) 121 3132300
Fax +44 (0) 121 3131938
salesenq@severntrentservices.co.uk

565.0080 03/05

SORB 33™ As Removal System Sizing & Estimate

System Requirements

Client:	Las Quintas Serenas Water Co					Well Utilization Factor:	50%
Name of Site:	Well #5 - APU Unit		Ambient/Final pH:	7.2/7.2		Fe/Mn Removal:	No
Capacity:	0.29	MGD	As Analysis:	9	µg/L	pH Adjust't/Value:	No
	200	gpm	ackwash Volume:	3,100 gals		Reagent:	
Treatment:	114	gpm	Max Capacity:	210 gpm		Residuals Treat:	No

System Design

No. of Trains:	1		Media per Adsorber:	38	ft^3
Model No.:	APU-160		Total Media Inventory:	76	ft^3
Diameter:	4.0	ft	Media Bed Depth:	3.2	ft
Specific Velocity:	4.5	gpm/ft^2	Flow Configuration:	Parallel ^{w}/Bypass	
Design Pressure:	70	psig	Working Capacity:	227,400	BV's
System Footprint:	13 Ft x 5 Ft		Cycle Life:	51.7	Months

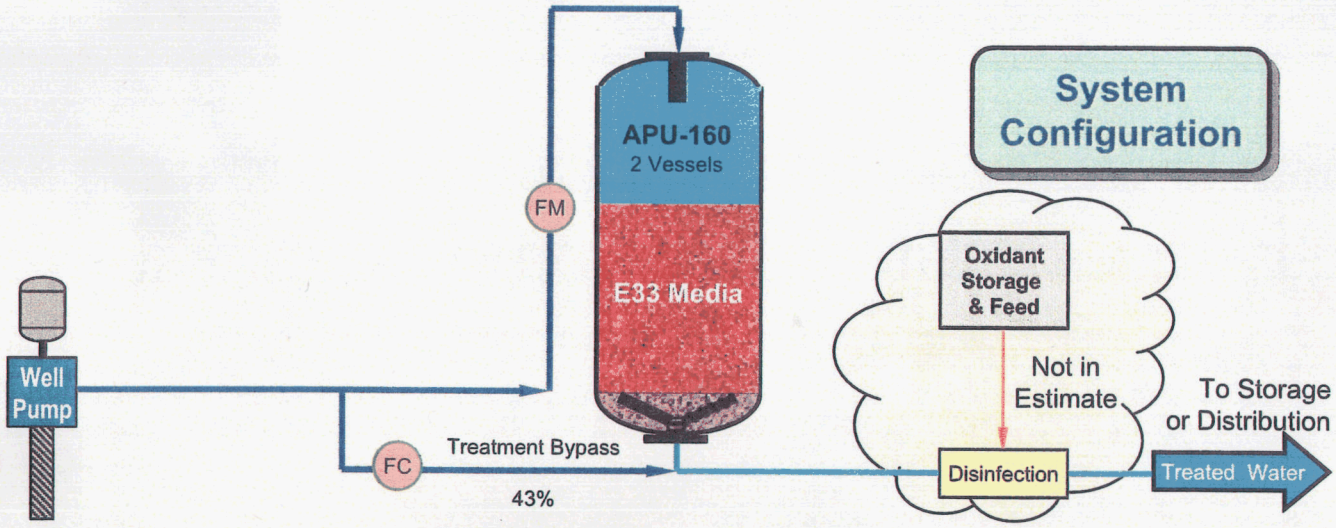

Estimated System Costs

Adsorbers & Media:	$97,500		Avg Media Replace & Disposal:	$4,111	per Yr
Auxiliary Equipment:	$6,500		Other Treatment Costs:	$0	
Installation:	$0				
Total Capital Costs:	$104,000	FOB Shop	Average Operating Costs:	$4,100	per Yr

Unit Capital Costs: **$0.361** per Gal/Day of Capacity

Unit Operating Costs: **$0.078** per 1,000 Gals

Issued: 16-Mar-05 Budget Estimate Valid Through: **15-May-05**

SEVERN TRENT SERVICES

Filtration Products

SORB 33™ As Removal System Sizing & Estimate

System Requirements

Client:	Las Quintas Serenas Water Co			Well Utilization Factor:	50%
Name of Site:	Well #6	Ambient/Final pH:	7.3/7.3	Fe/Mn Removal:	No
Capacity:	0.58 MGD	As Analysis:	14 µg/L	pH Adjust't/Value:	No
	400 gpm	ackwash Volume:	7,100 gals	Reagent:	
Treatment:	300 gpm	Max Capacity:	460 gpm	Residuals Treat:	No

System Design

No. of Trains:	2	Media per Adsorber:	84 ft^3
Model No.:	EAS-1606	Total Media Inventory:	168 ft^3
Diameter:	6.0 ft	Media Bed Depth:	3.0 ft
Specific Velocity:	5.3 gpm/ft^2	Flow Configuration:	Parallel ^{w}/Bypass
Design Pressure:	psig	Working Capacity:	124,900 BV's
System Footprint:	16 Ft x 6 Ft	Cycle Life:	24.0 Months

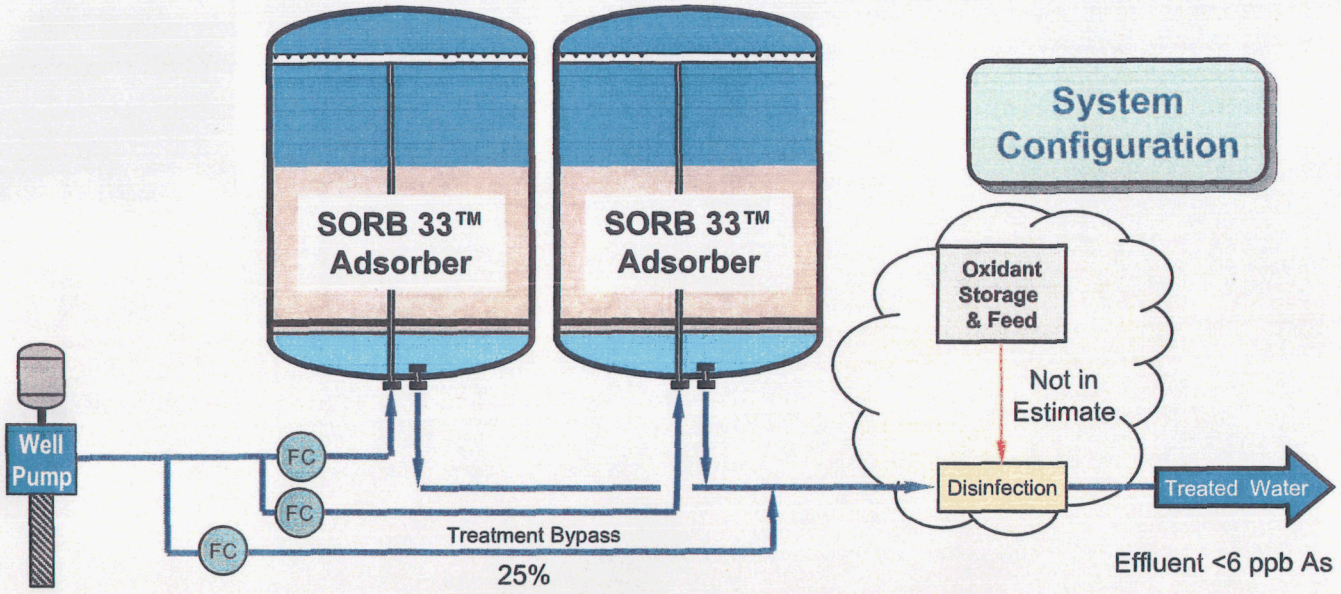

Estimated System Costs

Adsorbers & Media:	$181,500	Avg Media Replace & Disposal:	$17,821 per Yr
Auxiliary Equipment:	$6,500	Other Treatment Costs:	$0
Installation:	$0		
Total Capital Costs:	$188,000 FOB Shop	Average Operating Costs:	$17,800 per Yr

Unit Capital Costs: $0.326 per Gal/Day of Capacity

Unit Operating Costs: $0.169 per 1,000 Gals

Issued: 14-Mar-05 Budget Estimate Valid Through: 13-May-05

SEVERN TRENT SERVICES

Filtration Products

SORB 33™ As Removal System Sizing & Estimate

System Requirements

Client:	Las Quintas Serenas Water Co			Well Utilization Factor:	50%
Name of Site:	Well #7	Ambient/Final pH:	7.2/7.2	Fe/Mn Removal:	No
Capacity:	1.15 MGD	As Analysis:	11 µg/L	pH Adjust't/Value:	No
	800 gpm	ackwash Volume:	12,600 gals	Reagent:	
Treatment:	533 gpm	Max Capacity:	810 gpm	Residuals Treat:	No

System Design

No. of Trains:	2	Media per Adsorber:	150 ft^3
Model No.:	EAS-3008	Total Media Inventory:	299 ft^3
Diameter:	8.0 ft	Media Bed Depth:	3.0 ft
Specific Velocity:	5.3 gpm/ft^2	Flow Configuration:	Parallel ^{w}/Bypass
Design Pressure:	psig	Working Capacity:	166,200 BV's
System Footprint:	20 Ft x 10 Ft	Cycle Life:	31.9 Months

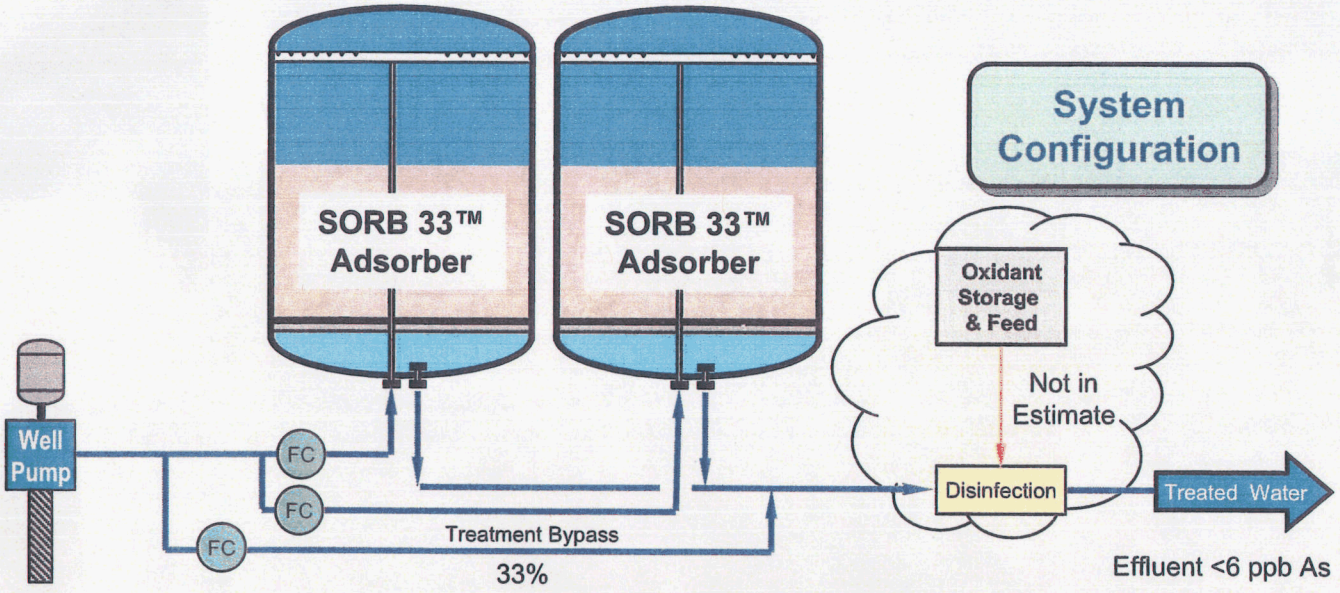

Estimated System Costs

Adsorbers & Media:	$236,500	Avg Media Replace & Disposal:	$22,931 per Yr
Auxiliary Equipment:	$6,500	Other Treatment Costs:	$0
Installation:	$0		
Total Capital Costs:	$243,000 FOB Shop	Average Operating Costs:	$22,900 per Yr

Unit Capital Costs: $0.211 per Gal/Day of Capacity

Unit Operating Costs: $0.109 per 1,000 Gals

Issued: 14-Mar-05 Budget Estimate Valid Through: 13-May-05

SEVERN TRENT SERVICES

Filtration Products

SORB 33™ As Removal System Sizing & Estimate

System Requirements

Client:	Las Quintas Serenas Water Co			Well Utilization Factor:	50%
Name of Site:	Central Treatment	Ambient/Final pH:	7.2/7.2	Fe/Mn Removal:	No
Capacity:	1.60 MGD	As Analysis:	20 µg/L	pH Adjust't/Value:	No
	1,110 gpm	ackwash Volume:	19,600 gals	Reagent:	
Treatment:	925 gpm	Max Capacity:	1,260 gpm	Residuals Treat:	No

System Design

No. of Trains:	2	Media per Adsorber:	260 ft^3
Model No.:	EAS-4710	Total Media Inventory:	519 ft^3
Diameter:	10.0 ft	Media Bed Depth:	3.3 ft
Specific Velocity:	5.9 gpm/ft^2	Flow Configuration:	Parallel ^{w}/Bypass
Design Pressure:	psig	Working Capacity:	101,600 BV's
System Footprint:	24 Ft x 12 Ft	Cycle Life:	19.5 Months

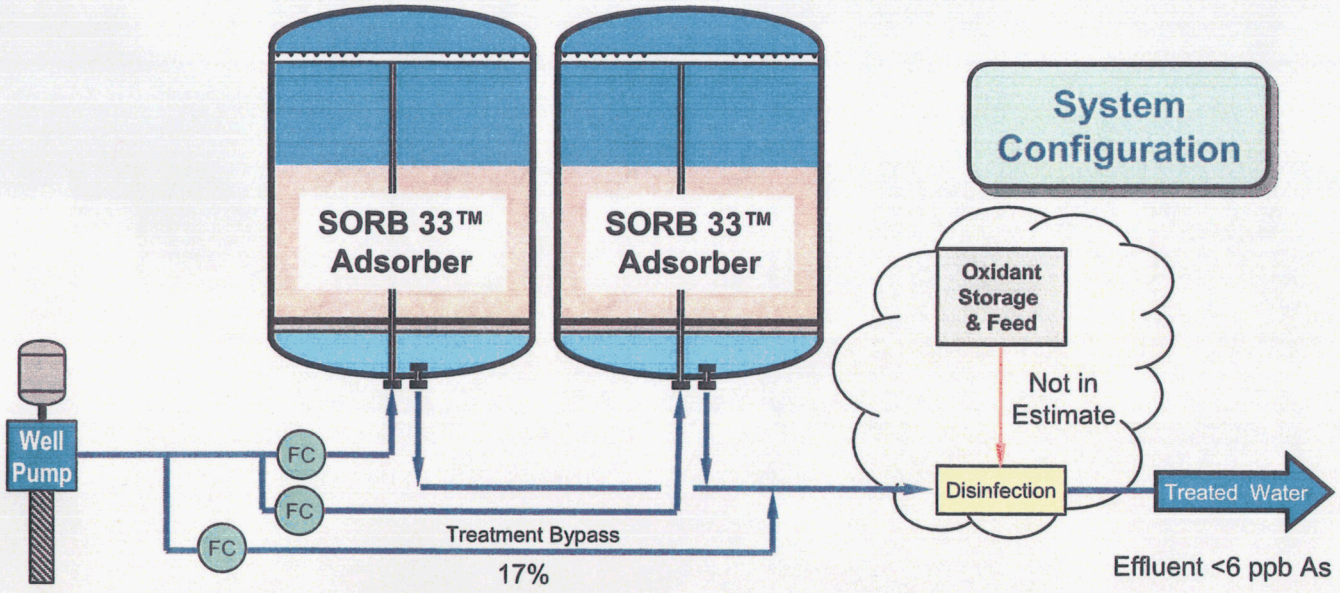

Estimated System Costs

Adsorbers & Media:	$330,500	Avg Media Replace & Disposal:	$63,701 per Yr
Auxiliary Equipment:	$6,500	Other Treatment Costs:	$0
Installation:	$0		
Total Capital Costs:	$337,000 FOB Shop	Average Operating Costs:	$63,700 per Yr

Unit Capital Costs: **$0.211** per Gal/Day of Capacity

Unit Operating Costs: **$0.218** per 1,000 Gals

Issued: 14-Mar-05 Budget Estimate Valid Through: **13-May-05**

SEVERN TRENT SERVICES

Filtration Products

Bayoxide E 33

Edition: 2002-08-22
Replaces edition of: 2001-11-09

Type	Technical oxide		
Form supplied	Granules		
Chemical designation	Synthetic iron oxide hydroxide α-FeOOH		
CAS no.	20344-49-4		
Specification	**Technical data**		
	Fe_2O_3 Test method DIN 55 913 (1972)	min. 60 %	
	Bulk density Test method DIN ISO 787 Part 11 (1995)	min. 0.4 g/cm³	max. 0.6 g/cm³
	Specific surface area Test method DIN 66 131 (1993)	min. 120 m²/g	max. 200 m²/g
	Water-soluble content Test method DIN EN ISO 787 Part 3 (1995)		max. 1.0 %
	Water content (ex works) Bayer test method SSP 27472		max. 20 %
	Sieve analysis < 0.5 mm Bayer test method K006-00		max. 20 %
	Sieve analysis > 2.0 mm Bayer test method K006-00		max. 5 %
	Al Test method: ICP OES DIN 11885		< 350 ppm
	Ba Test method: ICP DIN 38406 -22		< 10 ppm
	Co Test method: ICP DIN 38406 -22		< 100 ppm
	Cr Test method: ICP OES DIN 11885		< 250 ppm
	Cu Test method: ICP DIN 38406 -22		< 100 ppm
	Mn Test method: ICP DIN 38406 -22		< 3,000 ppm
	Ni Test method: ICP DIN 38406 -22		< 300 ppm
	Pb Test method: ICP DIN 38406 -22		< 3 ppm
	Zn Test method: ICP DIN 38406 -22		< 100 ppm
Informative technical data (guide values)	Density Test method DIN ISO 787 Part 10 (1995)	approx. 3.6 g/cm³	

Bayer

Standard packaging	500-kg bulk bag min. 500 kg max. 505 kg
Transport and storage	Protect against weathering. Avoid extreme fluctuations in temperature. Special conditions for opened packaging: Avoid crushing the granules. Close bags to prevent the absorption of moisture and contamination.
Safety	Interfering ions, the pH of the water and other factors may influence the performance of Bayoxide E 33. The user of the product is responsible for monitoring the quality of the treated water to ensure that it complies with local regulations. The product must not be used for the treatment of water at a pH below 5 and above 10. The safety data sheet should be observed. This contains information on handling, product safety and ecology. Safety data sheet no. 411144 The product is not classified as dangerous under the relevant EC Directives and corresponding national regulations valid in the individual EU member states. It is not dangerous according to transport regulations. In countries outside the EU, compliance with the respective national legislation concerning the classification, packaging, labelling and transport of dangerous substances must be ensured.
Disposal of waste product	The spent media is to be disposed of in approved landfills provided local regulations are observed. The media is educted from the adsorber vessel into a purpose built tanker. Operators should confirm that they can meet any local landfill tipping conditions. For disposal within the EC, the appropriate code according to the European Waste Catalogue (EWC) should be used.

BAYER AG
Coatings, Colorants and Special Raw
Materials Business Group
D-51368 Leverkusen

This information and our technical advice - whether verbal, in writing or by way of trials - are given in good faith but without warranty, and this also applies where proprietary rights of third parties are involved. Our advice does not release you from the obligation to check its validity and to test our products as to their suitability for the intended processes and uses. The application, use and processing of our products and the products manufactured by you on the basis of our technical advice are beyond our control and, therefore, entirely your own responsibility. Our products are sold in accordance with the current version of our General Conditions of Sale and Delivery.

SORB 33™ As Removal System Scope of Supply

Adsorber Vessel

- Vertical Pressure Vessel(s), Carbon Steel, 5'0" Straight Side Height
- Code Stamped to ASME Section VIII, Division 1
- Interior Coated with NSF 61 Epoxy
- Bottom Distributor/Collector: Header/Lateral with Well Screen Pipes
- Media Fill: Gravity Fill & Hydraulic or Vacuum Empty
- Piping: Up to 8"-Ø: Sch 80 PVC; 8"-Ø & Larger: Carbon Steel, A53 Grade B

Process Valves

- Automatic Influent Flow Inlet Valves
- Manual Valve Tree for Isolation, Backwash & Media Fill/Drain

Instrumentation & Specialties

- Flow Meter & Totalizer for Each Adsorber
- Inlet & Effluent Pressure Gauges
- Differential Pressure Gauges for Each Adsorber

Optional Control System (as indicated in Requirements)

- Painted Steel NEMA 12 Control Panel with Grounding
- Fully Programmed PLC with Software Documentation
- Automated Valves for Isolation and Backwash

Optional Equipment (as indicated in Requirements)

- Acid pH Adjustment – pH PID Loop, Metering Pump, Inline Mixer & Storage
- CO_2 pH Adjustment – pH PID Loop & Mixing Unit
- Fe/Mn Removal Unit – Pressure Vessel, Automatic Valves & Media
- Residuals Handling – Backwash Water Hold Tank & Drain or Reclaim Pump

Field Services

- System Installation & Media Fill Inspection
- Training, Start-up & O&M Manuals

SEVERN TRENT SERVICES

Filtration Products

SORB 33™ As Removal
Frequently Asked Questions
Bulletin C

SEVERN TRENT SERVICES

Date: October 21, 2003

Subject: **Media Backwashing Requirements**

Severn Trent Water Purification, Inc.
5415 W. Sligh Ave., Suite 102, Tampa, FL 33634
Tel: 813 886 9331 info@severntrentservices.com

Q: IS BACKWASHING OF THE MEDIA REQUIRED? HOW MUCH WATER IS GENERATED? WHAT IS THE WATER QUALITY? DOES THE BACKWASHING STEP RELEASE ARSENIC TO THE WATER?

A: Periodic backwashing or "fluffing" of the media is performed every 1-4 months depending on usage and water quality. It is performed for two reasons. All media in pressurized systems over time can compact and potentially develop preferential channels that can cause short-circuiting or incomplete adsorption. Additionally, sediment from the well (if present), oxidized iron precipitate from the feed water, or other suspended material may be retained and captured in the media bed. To prevent excessive pressure drop or channeling, backwashing (typically using well water) to lift or fluff the bed is performed periodically.

Backwashing is typically performed at a rate of 9-11 GPM/Ft² for up to 5 bed volumes. *Arsenic is not desorbed during the backwashing process.* Since well water is used for backwashing, the backwash water quality will bear similar characteristics to the well water. The table below is an analysis of various parameters from actual field pilot adsorption tests. As noted, some filterable iron particulates (small media particles or captured ferric hydroxide [$Fe(OH)_3$] particulates in the influent) are present in the backwash water. This iron particulate represents nearly all of the total suspended solids and can be easily removed via filtration or decanting if required. Since the well water is used for backwashing, some As removal (partial treatment) results as the water flows upward through the fluidized bed during the backwash process. As observed below, the arsenic levels are in all cases lower than the well water. Also, it should be noted that a portion of the arsenic in the backwash effluent is associated with the iron particulate and is therefore insoluble.

	Sample	Analysis - Well Water			Analysis - Backwash Effluent		
Pilot Site	**Date**	**TSS** (PPM)	**As** (PPB)	**Fe** (PPM)	**TSS** (PPM)	**As** (PPB)	**Fe** (PPM)
Rio Rancho, NM	Apr 02	ND	49	0.05	28	21	18.00
	Apr 02				10	34	0.18
Manteca, CA	May 02	ND	19	ND	12	8	1.70
	Jul 02				ND	19	0.38
	Sep 02				ND	20	ND
Fernley, NV	May 03	ND	51	0.08	<5	18	1.30
	Jul 03				<5	36	1.90
	Aug 03				<5	42	0.90

Based on the backwash waster quality observed, this water is suitable for (1) discharge to a sewer or POTW if available; (2) direct discharge following particle filtration to a septic system, an open ditch, or other location; or (3) decanted and recycled back into the feed stream at the head of the system. For direct discharges or recycle scenarios, the backwash water is filtered to remove particulates with an appropriately sized dual bag or cartridge filter prior to discharge or recycle. Local or state permitting requirements for direct discharges should be consulted before exercising this option to obtain any regulatory approvals.

SORB 33™ As Removal
Frequently Asked Questions
Bulletin A

SEVERN TRENT SERVICES

Date: June 21, 2004

Subject: Spent Media Handling & Disposal

Severn Trent Water Purification, Inc.
5415 W. Sligh Ave., Suite 102, Tampa, FL 33634
Tel: 813 886 9331 info@severntrentservices.com

Q: HOW IS THE SPENT BAYOXIDE® E33 MEDIA CLASSIFIED, AND HOW IS IT DISPOSED?

A: One of the key advantages of Bayoxide® E33 iron oxide adsorbent is its ability to strongly bind arsenic as water passes through the media through a combination of adsorption, adhesion and other physical/chemical mechanisms. The iron oxide media has been tested in multiple lab scale, pilot and commercial drinking water applications since 1999. The spent media from many of these applications have been tested. In each case the spent media passed the USEPA's Toxicity Characteristic Leaching Procedure threshold (TCLP per RCRA 40 CFR 261). The TCLP test is an extraction procedure used for determining whether the material (media), when discarded, would classify as a hazardous waste.

Based on repeated results, Severn Trent Services strongly believes that the media will not be characterized as a hazardous waste Unless preempted by more stringent state or local regulations, the spent media is considered a RCRA Subtitle D, non-hazardous solid waste, suitable for disposal in a sanitary landfill. The table on the right shows some spent media testing results.

USEPA TCLP	Toxicity Characteristics Leaching Procedure (TCLP)		
Metal	Col #1	Col #2	Limit
Arsenic	<0.01	<0.20	5.0
Barium	0.08	0.24	100
Cadmium	<0.10	<0.10	1.0
Chromium	<0.01	<0.20	5.0
Lead	<0.20	<0.20	5.0
Mercury	<0.02	<0.02	0.2
Selenium	<0.01	<0.01	1.0
Silver	<0.10	<0.10	5.0

Final disposition and determination is typically the responsibility of the customer, since State or federal agencies do not grant blanket "approval" or "disapproval" of spent materials, but rather allows the generator of such residuals to make a hazardous waste determination. For more guidance on testing the spent E33 media, feel free to contact Severn Trent Services for assistance.

Q: HOW IS THE SPENT MEDIA REMOVED FROM THE SORB 33™ ADSORBERS?

A: Spent media is removed from adsorber vessels either by vacuuming or under hydraulic pressure. Vacuuming entails first draining the vessel of water followed by vacuuming the media from the top nozzle or manway with disinfected or dedicated vacuum truck equipment. This process generates the minimum amount of wastewater.

Alternatively, media can be removed from a flooded vessel hydraulically through the bottom or out the side of the adsorber above the underbedding gravel. 20 PSIG air pressure can force most of the media out, and a small amount of backwash water flow can hydraulically remove the remainder through the same nozzle. Underbedding gravel may be removed with the media if the nozzle is on the vessel bottom. Upon completion of hydraulic media removal, the vessel is drained and any heel of media remaining in the vessel is flushed out under water pressure or vacuumed out.

APPENDIX B

EQUIPMENT INFORMATION

Division of Abell Corporation

POLYPROCESSING COMPANY

Vertical Tanks with IMFO®

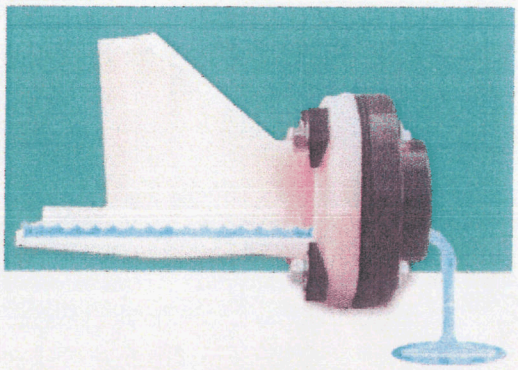

Specifically recommended for

Sodium Hypochlorite

Full-Drain Solution

Flat Bottom _____ Sloped Bottom _____ IMFO Pads

Printer-Friendly IMFO Tank Listing

IMFO Flange Assembly Installation IMFO Nozzle Drawings

Download Complete Product Catalog (8 MB)

Full-Drain Solution

Specify HDXLPE poly tanks with OR-1000 for increased chemical resistance and even longer tank life

High Density Crosslinked (HDXLPE) ranging from 230 to 14,950 gallons

---

You may download **Tank Drawings** and **Gallons Per Inch Charts** by clicking on the appropriate links below. You'll need Adobe Reader to view these documents. Take our website with you! Request a copy of our **Solutions CD** today and you'll have access to everything found on our website PLUS Tank Drawings in AutoCAD format and General Specifications in Microsoft Word format.

Contact Customer Support

Get Acrobat Reader

Tank	Gallons	F.O.B.	Stock	Nominal	Approx.	Approx.	Lid	IMFO	Ladder

		Drawings	per Inch Charts	LA	VA	CA	Number	Capacity	O.D.	Overall Height	Size	Size	Height
●		Rev G	Chart			1	1114950	14,950	14'-0"	16'-10"	24"	4"	14'
●		Rev H				1	1112150	12,150	12'-0"	16'-8"	24"	4"	16'
◆		Rev C	Chart	4			1112150	12,150	12'-0"	17'-1"	24"	**4" D**	16'
●		Rev H	Chart			1	1110300	10,300	12'-0"	14'-4"	24"	4"	14'
◆	▲	Rev D	Chart	4			1110150	10,150	11'-11"	14'-5"	24"	4"	14'
◆		Rev E	Chart			1	1109150	9,150	10'-0"	17'-7"	24"	4"	17'
◆	▲	Rev D	Chart	4			1108500	8,500	10'-0"	16'-9"	24"	4"	16'
◆		Rev H	Chart			1	1108350	8,350	12'-0"	11'-11"	24"	4"	11'
◆	▲	Rev D	Chart	4			1108100	8,100	11'-11"	11'-10"	24"	4"	11'
◆		Rev E	Chart			1	1108050	8,050	10'-0"	15'-6"	24"	4"	15'
◆	▲	Rev E	Chart	4			1107300	7,300	10'-2"	14'-2"	24"	4"	14'
◆		Rev E	Chart			1	1107100	7,100	12'-0"	10'-9"	24"	4"	8'
◆	▲	Rev D	Chart	4			1106600	6,600	11'-11"	10'-1"	24"	4"	9'
◆		Rev E	Chart			1	1106600	6,600	10'-0"	13'-5"	24"	4"	13'
◆	▲	Rev E	Chart	4	7		1106150	6,150	10'-2"	12'-5"	24"	4"	12'
◆	▲	Rev D	Chart	4			1106100	6,100	8'-6"	16'-4"	24"	**4" D**	16'
◆		Rev E	Chart			1	1106100	6,100	10'-0"	12'-7"	24"	4"	12'
◆	▲	Rev D	Chart	4			1105050	5,050	7'-10"	16'-0"	24"	**4" D**	15'
◆	▲	Rev G	Chart			1	1105000	5,000	8'-2"	15'-4"	24"	3"	15'
◆		Rev E	Chart			1	1104550	4,550	10'-0"	9'-10"	24"	4"	9'
◆	▲	Rev D	Chart	4			1104300	4,300	11'-11"	7'-1"	24"	4"	6'
◆	▲	Rev D	Chart		7		1104150	4,150	8'-6"	12'-6"	24"	3"	12'
◆	▲	Rev G	Chart			1	1104050	4,050	8'-2"	12'-10"	24"	3"	12'
◆	▲	Rev D	Chart	4			1103900	3,900	7'-10"	12'-6"	24"	**4" D**	12'
◆		Rev F	Chart			1	1103900	3,900	10'-0"	7'-10"	24"	4"	7'
◆	▲	Rev E	Chart	4	7		1103000	3,000	7'-1"	12'-0"	24"	3"	11'
◆	▲	Rev G	Chart			1	1102800	2,800	8'-2"	9'-5"	24"	3"	9'
V	▲	Rev E	Chart	4	7		1102550	2,550	7'-1"	10'-4"	24"	3"	10'
V	▲	Rev E	Chart	4	7		1102000	2,000	7'-1"	8'-6"	24"	3"	8'
◆	▲	Rev F	Chart			1	1101800	1,800	8'-2"	6'-4"	24"	3"	6'
		Rev C	Chart			1	1101600	1,600	6'-1"	9'-1"	17"	3"	9'
		Rev C	Chart	4	7		1101400	1,400	5'-4"	9'-11"	10/19"	3"	
		Rev E	Chart			1	1101250	1,250	5'-0"	9'-10"	17"	3"	9'
		Rev C	Chart		7		1101150	1,150	5'-4"	8'-3"	10/19"	3"	8'
		Rev C	Chart	4	7		1100905	905	5'-4"	6'-7"	10/19"	2"	6'
		Rev E	N/A		7		1100850	850	4'-0"	10'-3"	10/19"	3"	
		Rev B	Chart			1	1100680	680	4'-0"	8'-6"	17"	3"	
		Rev C	Chart	4	7		1100545	545	4'-0"	6'-11"	10/19"	2"	6'
		Rev B	Chart			1	1100475	475	4'-0"	6'-4"	17"	3"	6'
		Rev B	Chart			1	1100325	325	4'-0"	4'-8"	17"	3"	
		Rev B	Chart			1	1100230	230	3'-2"	4'-11"	17"	3"	

D = Double IMFO® available

● = Molded-in Lifting Lugs; V = Molded-in Lifting Lugs - Virginia Only

▲ = Molded-in Ladder Lugs; M = Molded-in Laddder Lugs - Monroe Only

Molded-In Lifting Lugs

Molded-In Ladder Attachment

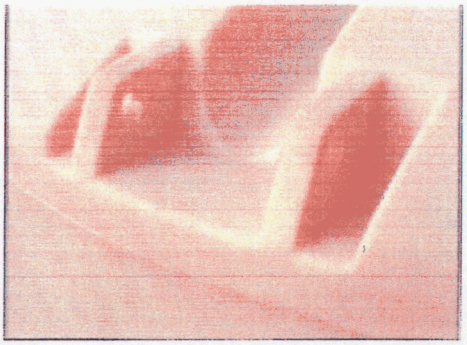

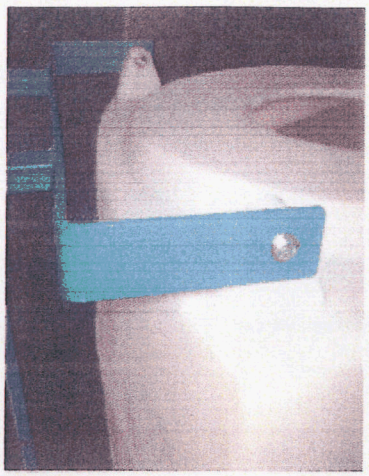

Sloped Bottom Vertical Tanks with IMFO®

		Tank Drawings	Gallons per Inch Charts	F.O.B. LA	F.O.B. VA	F.O.B. CA	Stock Number	Nominal Capacity	Approx. O.D.	Approx. Overall Height	Lid Size	IMFO Size	Ladder Height
◆		Rev C				1	1215000	15000	14'-0"	17'-2"	24"	4"	14'
◆		Rev G				1	1211800	11800	12'-0"	16' 6"	24"	4"	15'
◆		Rev F				1	1209850	9850	12'-0"	14'-1"	24"	4"	12'
◆		Rev C				1	1208800	8800	10'-0"	17'-3"	24"	4"	16'
◆		Rev C				1	1208200	8200	10'-0"	16'-2"	24"	4"	15'
◆		Rev F				1	1207900	7900	12'-0"	11'-8"	24"	4"	10'
◆		Rev C				1	1206900	6900	10'-0"	14'-1"	24"	4"	13'
◆		Rev C				1	1206840	6840	12'-0"	10'-6"	24"	4"	9'
◆	▲	Rev D		4			1206350	6350	10'-2"	12'-7"	24"	4"	12'
◆		Rev C				1	1206250	6250	10'-0"	12'-11"	24"	4"	12'
◆		Rev C				1	1205300	5300	12'-0"	8'-11"	24"	4"	8'
◆	▲	Rev F				1	1205150	5150	8'-2"	16'-1"	24"	3"	15'
◆		Rev B				1	1204600	4600	10'-0"	10'-1"	24"	4"	9'
◆	▲	Rev F				1	1204550	4550	8'-2"	14'-6"	24"	3"	14'
◆	▲	Rev F				1	1204200	4200	8'-2"	13'-6"	24"	3"	12'
◆	▲	Rev C			7		1204100	4100	8'-6"	12'-11"	24"	3"	12'
◆		Rev C				1	1203950	3950	10'-0"	9'-0"	24"	4"	8'
◆	▲	Rev F				1	1202900	2900	8'-2"	10'-1"	24"	3"	9'
◆	▲	Rev E				1	1201900	1900	8'-2"	7'-6"	24"	3"	7'

◆ = Molded-in Lifting Lugs

▲ = Molded-in Ladder Lugs

Pads for Tank with IMFO®

Drawings	F.O.B. LA	F.O.B. VA	F.O.B. CA	Stock Number	Diameter	Height
Rev --		7		8000004	4'-0"	4"
Rev --			1	8000005	5'-0"	6"
Rev --		7		8000054	5'-4"	4"
Rev --			1	8000006	6'-0"	6"
Rev --		7		8000071	7'-1"	4"
Rev --		7	1	8000008	8'-2"	4"
Rev --	4			8000086	8'-6"	4"
Rev --			1	8000010	10'-0"	4"
Rev --	4	7		8000102	10'-2"	4"
Rev --	4		1	8000012	12'-0"	4"
Rev --			1	8000014	14'-0"	4"
Rev --			1	8100008	8'-2" Slope	11" x 5"
Rev --	4			8100086	8'-6" Slope	12" x 6"
Rev --			1	8100010	10'-0" Slope	12" x 6"
Rev --	4			8100102	10'-2" Slope	16" x 6"
Rev --			1	8100012	12'-0" Slope	10" x 4"

Another Poly Processing innovation is the I-M-F-O or Integrally Molded Flanged Outlet full drain vertical tank. Our high density crosslinked polyethylene vertical tank with the seamless, one-piece designed IMFO® nozzle is a cost effective solution that provides a greater margin of safety and promotes longer tank life. Poly Processings IMFO® vertical tanks eliminate sludge buildup when storing chemicals like Sodium Hypochlorite and suspension materials. The IMFO® system's full drain feature improves process efficiency by reducing the frequency of cleanings and alleviates employee confined space entry.

NON-CONTROLLED COPY

INFORMATION SUBJECT TO CHANGE WITHOUT NOTICE

VERIFY REV LEVEL OF PAPER COPY WITH REV LEVEL ON PPC WEB SITE

REV "A" ADDED DIMENSION BYJB 10/18/02 CKMBW
REV "B" ADDED LIFTING LUGS & DETAIL BYJB 1/20/03 CKWM
REV "C" REVISED STOCK NUMBER BYJB 1/20/03 CKWM
REV "D" ADDED FITTING NOTE BYJB 2/5/03 CKMBW
REV "E" REVISED IMFO STYLE BYJB 5/5/03 CKWM
REV "F" REVISED MANWAY COVER BYJB 2/3/05 CKWM
REV "G" ADDED LADDER ATTACHMENT LUGS BYJB 2/3/05 CKWM

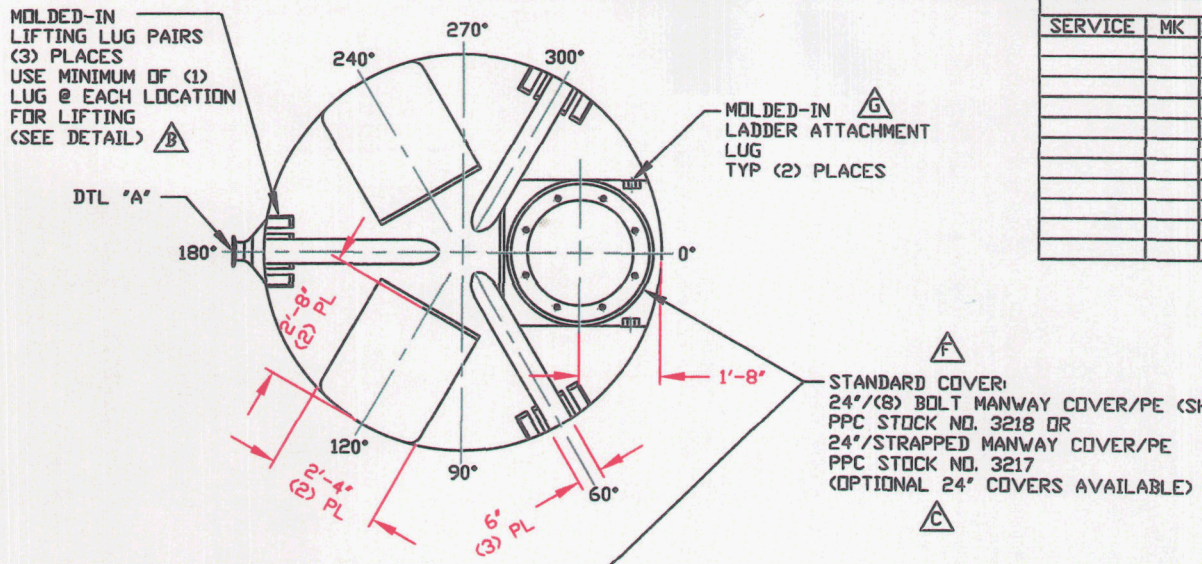

NOZZLE SCHEDULE & ACCESSORIES

SERVICE	MK	STOCK NO.	SIZE	FITTING	DEG	ELEV

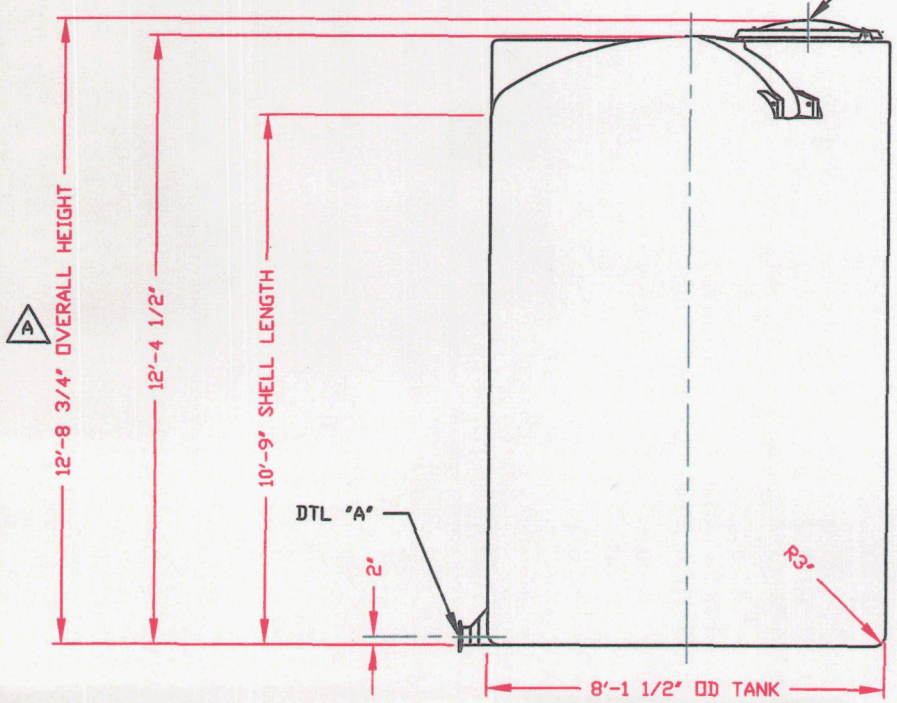

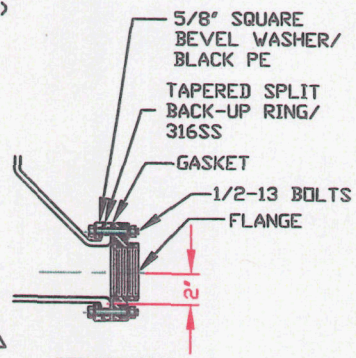

DETAIL "A"
(INTEGRALLY MOLDED FLANGED OUTLET)
AVAILABLE IN 3" SIZE ONLY
SCALE: NONE

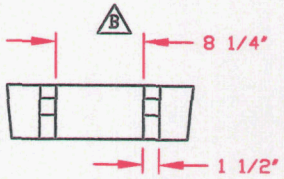

LIFTING LUG DETAIL
(3) PLACES
SCALE: 1"=1'-0"

D

NOTE:
MUST USE FLEXIBLE CONNECTIONS ALL LOWER SIDEWALL FITTINGS

NOTES
1. THIS IS A COMPUTER GENERATED DWG. DO NOT REVISE BY HAND.
2. DIMENSIONS WILL VARY ±3% DUE VARIATIONS IN MULTIPLE MOLDS & CONDITIONS PREVALENT DURING MANUFACTURE & USAGE.
3. NO MOLDED IN GALLONAGE MARKERS THIS TANK.

CALCULATED CAPACITIES/ VOLUME IN U.S. GALLONS		
DESIGN CAP	DOME VOL	TOTAL VOL
4083	327	4410

CONFIDENTIAL PROPERTY OF POLY PROCESSING COMPANY NOT FOR REPRINT OR USE WITHOUT PERMISSION

DWG TITLE: 4050 GALLON IMFO TANK

SCALE: 3/8"=1'-0"

DATE: 3/8/00

POLY PROCESSING COMPANY
Western Region
P.O. Box 69
6800 South Ash Street
French Camp, CA 95231
(209) 982-4904
FAX (209) 982-9435

DR: MB WILKERSON

CK: D. RECTOR

SHEET	COMPUTER FILE	REV
1 OF 1	11104050	G

NON-CONTROLLED COPY	COPY ISSUED BY_____.
INFORMATION SUBJECT TO CHANGE WITHOUT NOTICE	
COPY WILL NOT BE UPDATED	COPY ISSUED ON_____.

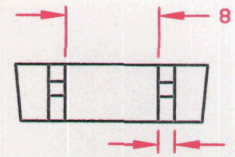

LIFTING LUG DETAIL
(6) PLACES
SCALE: 1"=1'-0"

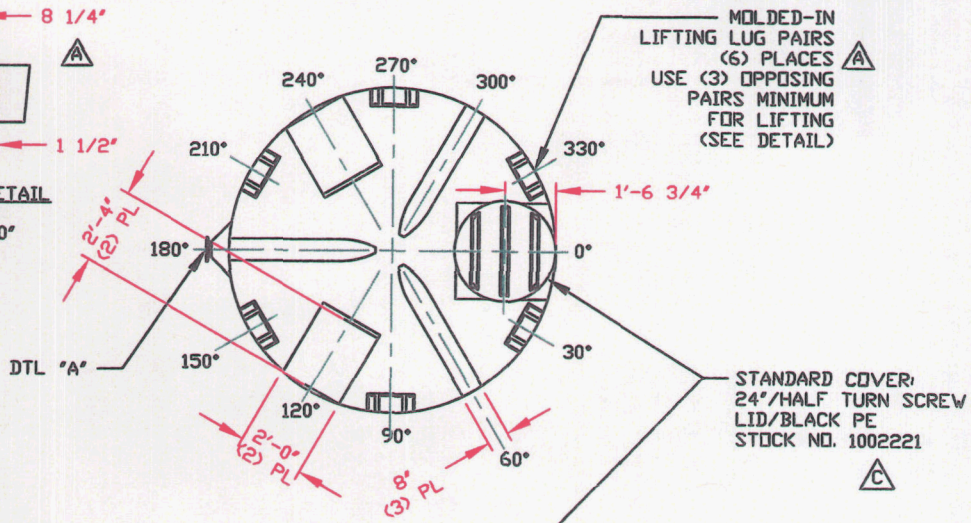

NOZZLE SCHEDULE & ACCESSORIES

SERVICE	MK	STOCK NO.	SIZE	FITTING	DEG	ELEV

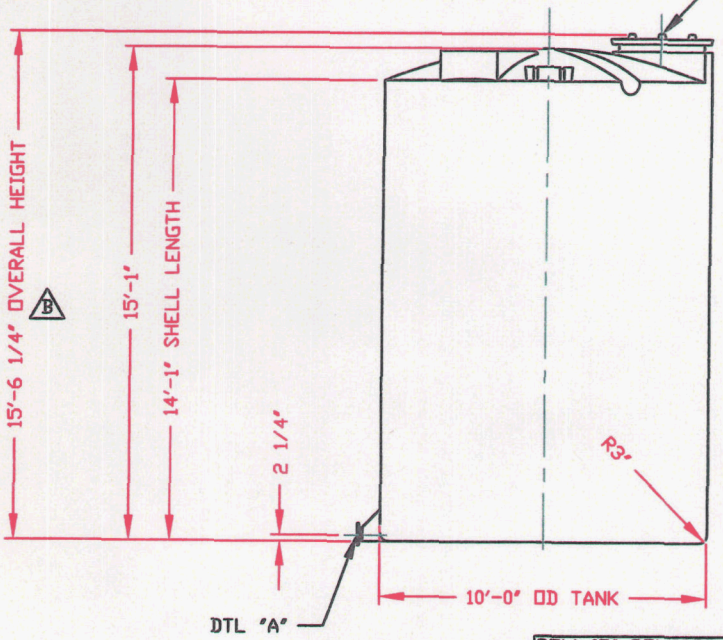

NOTE: D
MUST USE FLEXIBLE CONNECTIONS ALL LOWER SIDEWALL FITTINGS

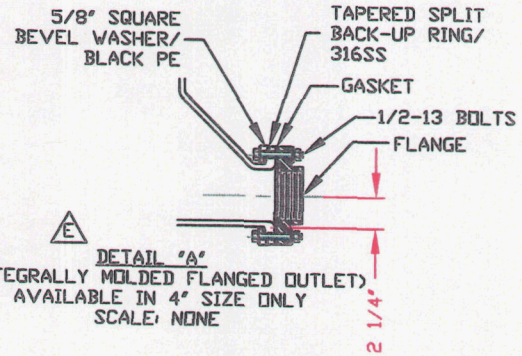

DETAIL "A"
(INTEGRALLY MOLDED FLANGED OUTLET)
AVAILABLE IN 4" SIZE ONLY
SCALE: NONE

NOTES
1. THIS IS A COMPUTER GENERATED DWG. DO NOT REVISE BY HAND.
2. DIMENSIONS WILL VARY ±3% DUE TO VARIATIONS IN MULTIPLE MOLDS & CONDITIONS PREVALENT DURING MANUFACTURE & USAGE.
3. NO MOLDED IN GALLONAGE MARKERS THIS TANK.

CALCULATED CAPACITIES/ VOLUME IN U.S. GALLONS

DESIGN CAP	DOME VOL	TOTAL VOL
8050	250	8300

CONFIDENTIAL PROPERTY OF POLY PROCESSING COMPANY NOT FOR REPRINT OR USE WITHOUT PERMISSION

DWG TITLE: 8050 GALLON IMFO TANK

SCALE: 1/4"=1'-0"
DATE: 3/9/00

POLY PROCESSING Company
Western Region
P.O. Box 69
2850 South Ash Street
French Camp, CA 95231
(209) 982-4984
FAX (209) 982-4433

DR: MB WILKERSON
CK: D. RECTOR

SHEET	COMPUTER FILE	REV
1 OF 1	11108050	E

REV "E" REVISED IMFO STYLE BY:JB 4/30/03 CK:WM	
REV "D" ADDED FITTING NOTE BY:JB 2/27/03 CK:MBW	
REV "C" REVISED STOCK NUMBER BY:JB 2/27/03 CK:MBW	
REV "B" ADDED DIMENSION BY:JB 10/21/02 CK:MBW	
REV "A" ADDED LIFTING LUGS & DETAIL BY:JB 8/22/02 CK:WM	

B-26

NON-CONTROLLED COPY

INFORMATION SUBJECT TO CHANGE WITHOUT NOTICE

COPY WILL NOT BE UPDATED

COPY ISSUED BY_____.

COPY ISSUED ON_____.

REV "A" CORRECTED STRAIGHT WALL & OVERALL DIM BYMBW 11/2/01 CKJB
REV "B" ADDED LIFTING LUGS & DETAIL BYJB 6/26/02 CKWM
REV "C" ADDED DIMENSION BYJB 10/22/02 CKMBW
REV "D" REVISED LIFTING LUG DETAIL BYJB 1/14/03 CKWM
REV "E" REVISED STOCK NUMBER BYJB 1/14/03 CKWM
REV "F" ADDED FITTING NOTE BYJB 2/13/03 CKMBW
REV "G" REVISED IMFO STYLE BYJB 4/30/03 CKWM

NOZZLE SCHEDULE & ACCESSORIES

SERVICE	MK	STOCK NO.	SIZE	FITTING	DEG	ELEV

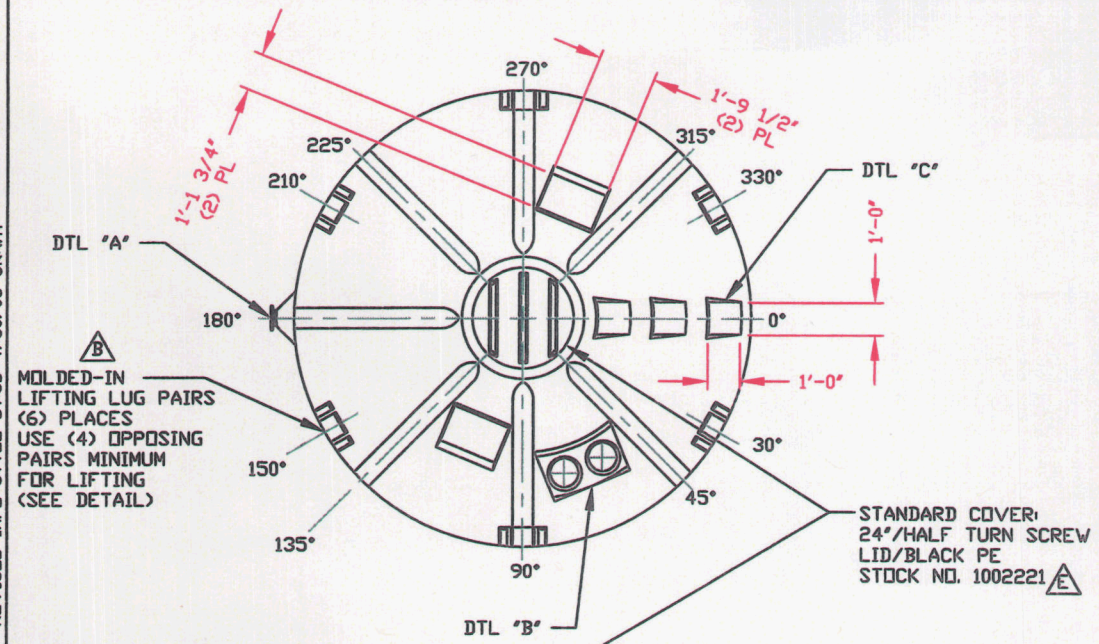

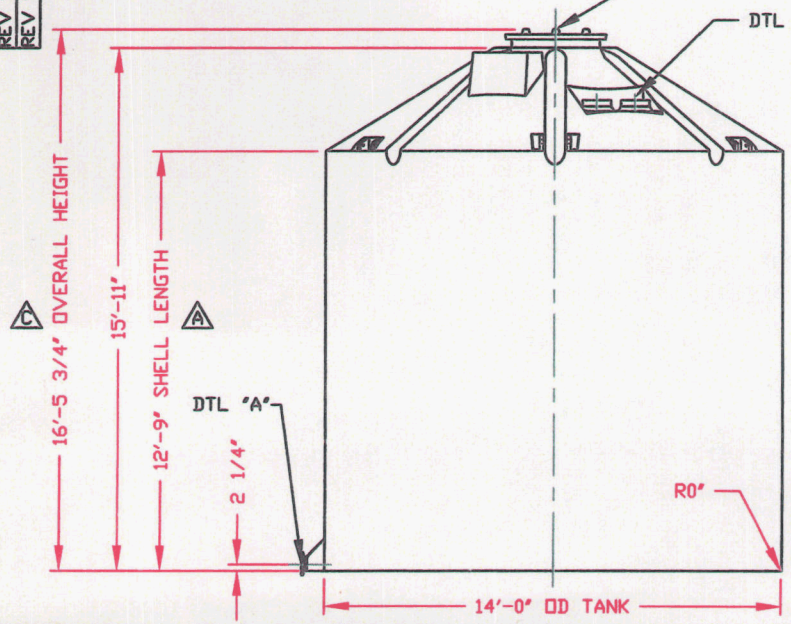

NOTE: F
MUST USE FLEXIBLE CONNECTIONS ALL LOWER SIDEWALL FITTINGS

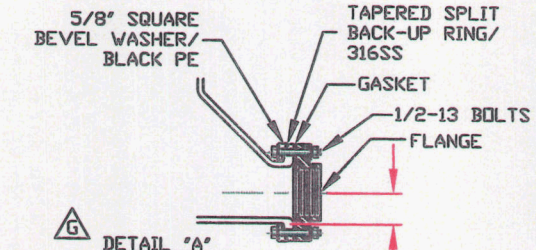

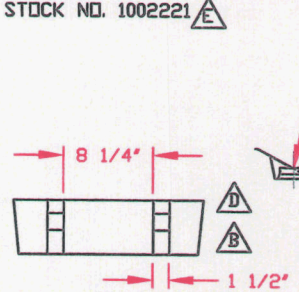

LIFTING LUG DETAIL
(6) PLACES
SCALE: 1"=1'-0"

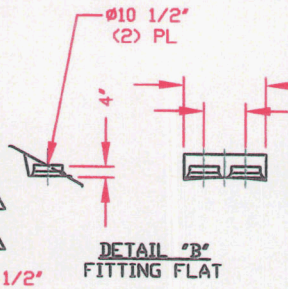

DETAIL "B"
FITTING FLAT

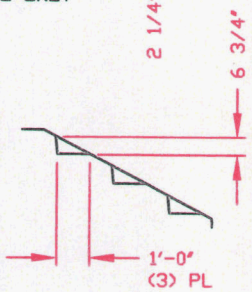

DETAIL "C"
FITTING FLAT

NOTES
1. THIS A COMPUTER GENERATED DWG. DO NOT REVISE BY HAND.
2. DIMENSIONS WILL VARY ±3% DUE VARIATIONS IN MULTIPLE MOLDS & CONDITIONS PREVALENT DURING MANUFACTURE & USAGE.
3. NO MOLDED IN GALLONAGE MARKERS THIS TANK.

CALCULATED CAPACITIES/ VOLUME IN U.S. GALLONS		
DESIGN CAP	DOME VOL	TOTAL VOL
14958	1542	16500

CONFIDENTIAL PROPERTY OF POLY PROCESSING COMPANY NOT FOR REPRINT OR USE WITHOUT PERMISSION

DWG TITLE: 14950 GALLON IMFO TANK

SCALE: 1/4"=1'-0"

DATE: 3/9/00

POLY PROCESSING Company — Western Region, P.O. Box 69, 6000 South Ash Street, French Camp, CA 95231, (209) 985-4994, FAX (209) 985-0453

DR: MB WILKERSON

CK: D. RECTOR

SHEET	COMPUTER FILE	REV
1 OF 1	11114950	G

B-25

LIMITED WARRANTY
Poly Processing Company

Poly Processing Company Product	Warranty Period
CROSSLINKED POLYETHYLENE TANKS for all suitable applications except those listed below	5 yrs
IMFO® **TANKS STORING SODIUM HYPOCHLORITE 9 – 15 wt%** (refer to PPC Position Statement) HDXLPE *w/ OR-1000™*, 1.9 spg rating	5 yrs
NON-IMFO® TANKS STORING SODIUM HYPOCHLORITE 9 – 15 wt% (refer to PPC Position Statement) 1000 gallons and larger: HDXLPE *w/ OR-1000™*, 1.9 spg rating Less than 1000 gallons: HDXLPE 1.9 spg rating	3 yrs
TANKS STORING SULFURIC ACID ≥ 80% CONCENTRATION (refer to PPC Position Statement) **SAFE-TANK®** to 8700 gallons: HDXLPE *w/ OR-1000™*, 2.2 spg rating Vertical tanks 1000 - 6600 gallons: HDXLPE *w/ OR-1000™*, 2.2 spg rating Vertical tanks less than 1000 gallons: HDXLPE 1.9 spg rating	3 yrs
TANKS STORING HYDROCHLORIC ACID ≤ 37% CONCENTRATION (refer to PPC Position Statement) HDXLPE *w/ OR-1000™*, 1.9 spg rating	5 yrs
TANKS STORING HYDROCHLORIC ACID ≤ 37% CONCENTRATION (refer to PPC Position Statement) HDXLPE 1.9 spg rating	3 yrs
LINEAR POLYETHYLENE TANKS for all suitable applications except for those listed above	3 yrs

Poly Processing Company's warranty consists of repair or replacement of defective product. Owner and/or user may be requested to provide a cleaned section of the product in question for evaluation. Product disposal or alternate use is the owner and/or user's responsibility. Warranty begins at date of shipment from PPC plant. Parts and ancillary items are warranted for ninety (90) days.

Poly Processing Company's liability is limited to either repair or replacement of its product. By accepting delivery of the product, owner and/or user waives any claim against PPC for incidental or consequential damages as they relate to lost profits or sales or to injury of persons or property, including secondary containment. Owner and/or user accepts full responsibility for providing secondary containment appropriate and adequate for the stored material.

This warranty will be nullified if:

1. Product has been used in manner other than its originally declared purpose or if PPC tank recommendations have not been followed.
2. Product has not been installed, used, and maintained in accordance with a) all federal, state, and local laws and regulations; b) generally accepted best practices within the applicable industry; c) guidelines set forth in the PPC Installation Manual and/or in PPC Position Statements.
3. Product has been altered or repaired by unauthorized personnel.
4. Notification of the defect has not been made in writing within the warranty period.
5. Invoice for product has not been paid.
6. Product has been subjected to misuse, negligence, fire, accident, act of war, or act of God.

The limited warranty described herein is Poly Processing Company's sole warranty and the complete, final and exclusive statement of the terms of the warranty. Owner and/or user may not rely on any oral statement or representations. This warranty is neither assignable nor transferable.

Issued: September 1, 2003

FSI®

Bag Filter Vessels

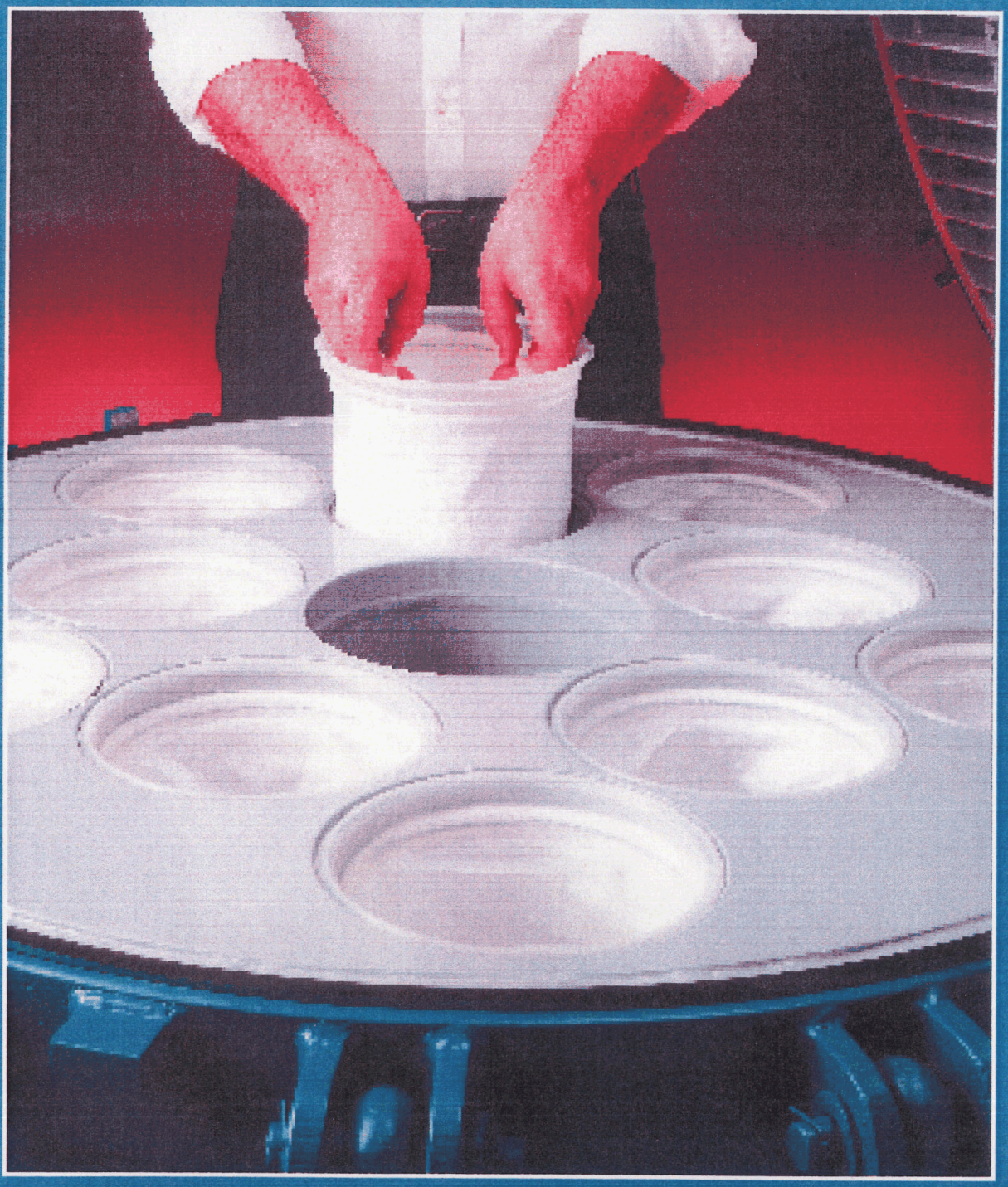

FSI Advanced Design

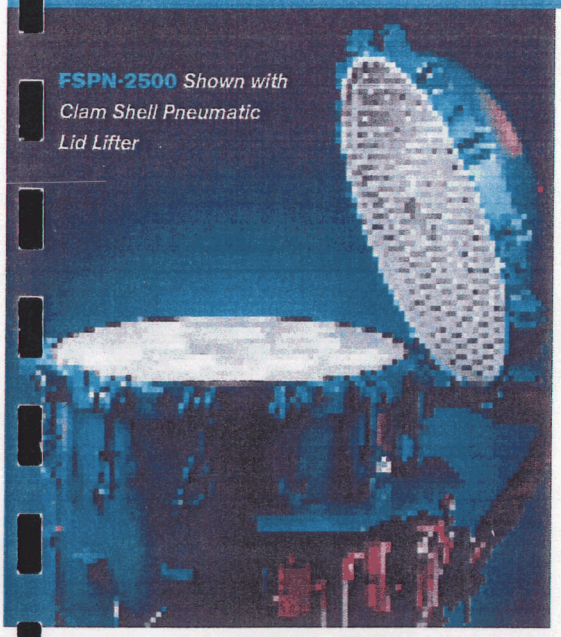

FSPN-2500 *Shown with Clam Shell Pneumatic Lid Lifter*

FSI Bag Filter Vessels are designed, built and stamped to meet code requirements in our own ASME code manufacturing facilities. Features like the single-gasket seal, permanent piping and sturdy perforated metal baskets as standard equipment provide durable and consistent performance. Positive bag hold down is an integral part of the lid. Our advanced basket design eliminates the need for under-basket gaskets. Swing-out cover bolts with eyenuts simplify the bag changing operation, while our (optional) Displacement Floats reduce spillage and ensure proper seating of the bag.

Of course, all FSI Bag Filter Vessels are fully compatible with conventional ring type bags as well as FSI Polyloc® bags, which feature the most advanced sealing device on the market today.

Standard Features

- Completely cleanable; easy cleaning access
- Full ports for unrestricted flow
- Sturdy baskets standard (no gasket required)
- Single gasket lid seal
- Positive bag sealing
- Carbon Steel or 304 SS housing standard; 316 SS available on request

Options

- Titanium, Hastelloy B&C, and Alloy 20 available on request
- Coatings available
- Heavy duty baskets available
- Additional connections including Sanitary Fittings and Socket Weld are available

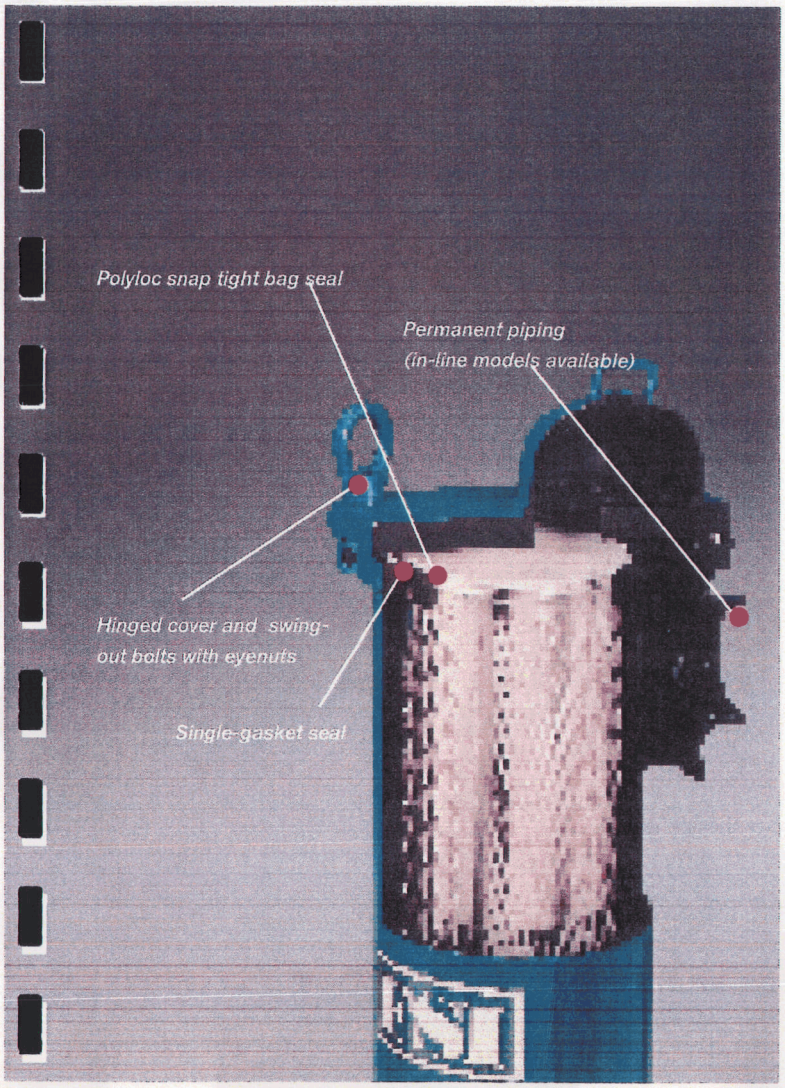

STANDARD FILTER VESSELS

Model No.	No. of Bags	Bag Size No.	Surface Area Per Bag, Ft.^{2}	Surface Area Per Vessel, Ft.^{2}	Inlet & Outlet Size	Max Flow Rate, GPM*
FSPN-20	1	3	0.5	0.5	1"	25
FSPN-35	1	4	1.0	1.0	1"	45
FSPN-40	1	1	2.0	2.0	2"	90
FSPN-85	1	2	4.4	4.4	2"	200
FSPN-250	2	2	4.4	8.8	3"-4"	400
FSPN-252	2	2	4.4	8.8	3"-4"	400
FSPN-355	3	2	4.4	13.2	3"-6"	600
FSPN-800	4	2	4.4	17.6	4"-6"	800
FSPN-1000	5	2	4.4	22.0	4"-8"	1000
FSPN-1100	6	2	4.4	26.4	4"-8"	1200
FSPN-1300	7	2	4.4	30.8	6"-8"	1400
FSPN-2000	8	2	4.4	35.2	6"-8"	1600
FSPN-2200	9	2	4.4	39.6	6"-8"	1800
FSPN-2500	10	2	4.4	44.0	6"-8"	2000
FSPN-3000	12	2	4.4	52.8	8"-10"	2400
FSPN-3500	14	2	4.4	61.6	10"-12"	2800
FSPN-4000	16	2	4.4	70.4	10"-12"	3200
FSPN-4200	18	2	4.4	79.2	10"-14"	3600
FSPN-4500	20	2	4.4	88.0	10"-14"	4000
FSPN-4800	22	2	4.4	96.8	10"-14"	4400
FSPN-5000	24	2	4.4	105.6	10"-14"	4800

*Maximum flow rate is based on aqueous flow at 1.0 PSI ΔP clean. Inlet and outlet pipe sizes can be changed to meet customer requirements.

STANDARD EASY OPEN LID VESSELS

Model No.	No. of Bags	Bag Size No.	Surface Area Per Bag, Ft.^{2}	Surface Area Per Vessel, Ft.^{2}	Inlet & Outlet Size	Max Flow Rate, GPM*
FSPZ-800	4	2	4.4	17.6	4"-6"	800
FSPZ-1000	5	2	4.4	22.0	4"-8"	1000
FSPZ-1100	6	2	4.4	26.4	4"-8"	1200
FSPZ-1300	7	2	4.4	30.8	6"-8"	1400
FSPZ-2000	8	2	4.4	35.2	6"-8"	1600
FSPZ-2200	9	2	4.4	39.6	6"-8"	1800
FSPZ-2500	10	2	4.4	44.0	6"-8"	2000
FSPZ-3000	12	2	4.4	52.8	8"-10"	2400
FSPZ-3500	14	2	4.4	61.6	10"-12"	2800
FSPZ-4000	16	2	4.4	70.4	10"-12"	3200
FSPZ-4200	18	2	4.4	79.2	10"-14"	3600
FSPZ-4500	20	2	4.4	88.0	10"-14"	4000
FSPZ-4800	22	2	4.4	96.8	10"-14"	4400
FSPZ-5000	24	2	4.4	105.6	10"-14"	4800

*Maximum flow rate is based on aqueous flow at 1.0 PSI ΔP clean. Inlet and outlet pipe sizes can be changed to meet customer requirements.

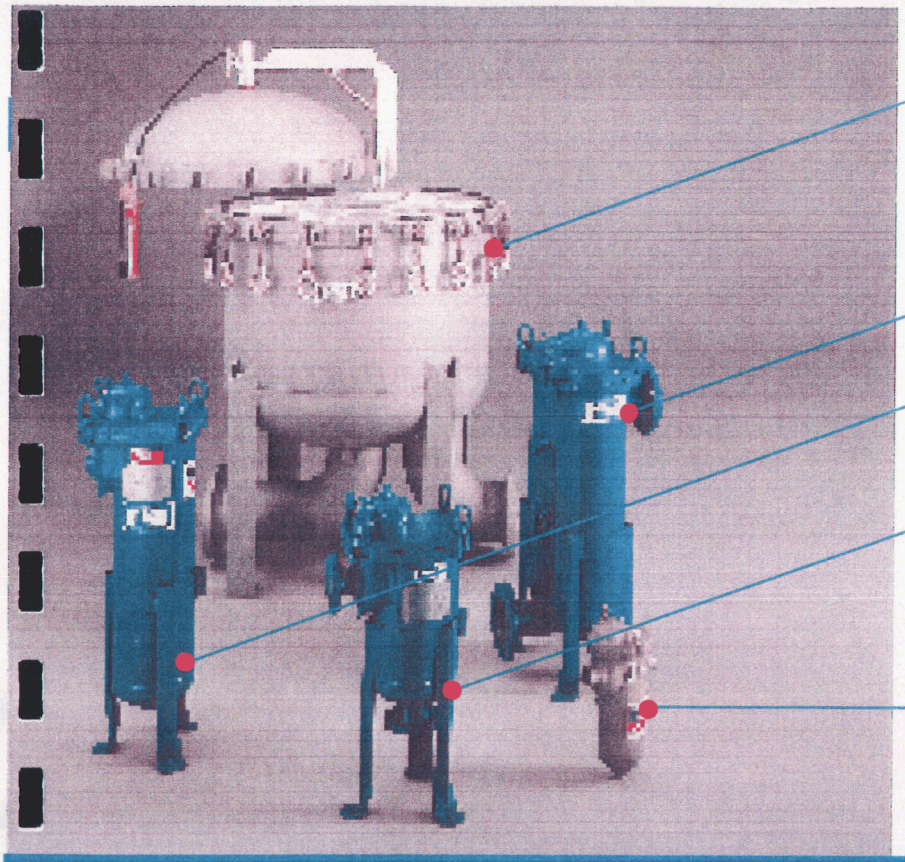

FSPN-3500 *Available in standard in-line configuration (shown) or side outlet. Custom styles available on request. Features single-gasket seal, easy access cleaning and sturdy baskets. Uses 14 size 2 filter bags. Hydraulic lid lifter is recommended on 14 bag vessels and larger.*

FSPN-250 *Features single-gasket seal and sturdy baskets. Uses two size 2 filter bags.*

FSPN-85 *Uses one size 2 bag. Our most popular vessel. Ideal for batch or continuous applications in paint and resin plants.*

FSPN-40 *Up to 4" full port that permits non-restricted flow. Side in, bottom out design shown; other outlet configurations available. Designed for continuous flow or small batch operations. Uses one size 1 filter bag. Shown with optional adjustable legs.*

FSPN-35 *Miniature single bag filter vessel designed for continuous flow or small batch operations. Uses one size 4 bag.*

See back cover for ordering information.

BFN Vessels: Your Cost Effective Alternative

FSI, the acknowledged leader in liquid bag filtration equipment, is pleased to offer its new BFN Series bag filter vessels for quality filtration in economical applications.

BFN vessels are available in Carbon Steel and 304 SS; 316 SS available on request.

Standard Features

- Maximum working pressure BFN 11, 12-150 PSI, BFN 13, 14-150 and 300 PSI
- Single gasket cover seal
- Gasket materials available include BUNA N, Neoprene EPR, Viton, Viton Teflon Encapsulated (others on request)
- 304 SS perforated basket for up to 75 PSI differential
- Two inlet/outlet configurations
- Same side inlet/outlet for easy manifolding
- Low pressure drops
- Variety of connections available in either NPT or flange
  BFN 11, 12-1", 1 1/4", 1 1/2", 2", 2 1/2", 3", 4"
  BFN 13, 14-1", 1 1/4", 1 1/2", 2"
- Permanently piped housing
- Available with extra length legs, evacuation float

Options

- Heavy duty baskets available
- Additional connections including Sanitary Fittings and Socket Weld are available
- BFNC 11, 12 ASME code versions available

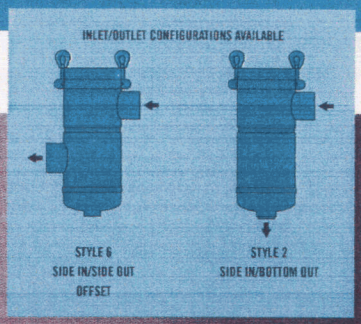

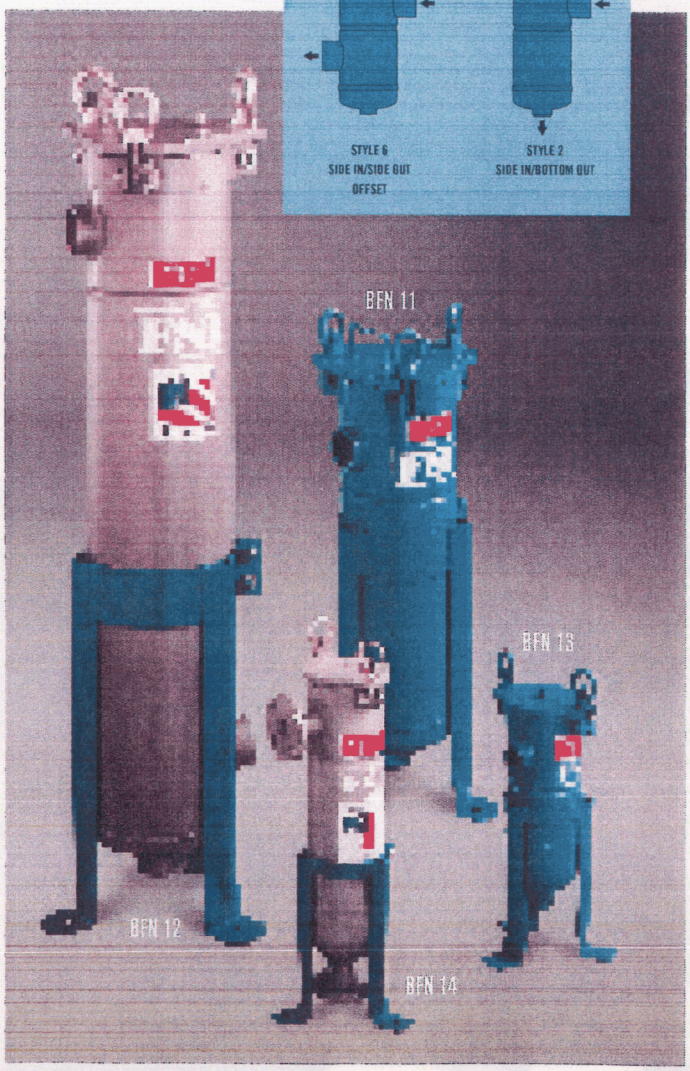

BFN VESSELS

Model No.	No. of Bags	Bag Size No.	Surface Area Per Bag, Ft.2	Standard Inlet/Outlet	Max GPM*
BFN 11	1	1	2.0	2"	100
BFN 12	1	2	4.4	2"	220
BFN 13	1	3	0.5	1"	25
BFN 14	1	4	1.0	1"	45

*Maximum flow rate is based on aqueous flow at 1.0 PSI ΔP clean through vessel only without bags installed.

Ordering Information

To order, use the abbreviations from the charts shown on this page.
The charts are color coded for your convenience.

Single Bag Example

1	2	3	4	5	6
FSPN-85	304	150	2FLG	2	COATED

These codes describe the following vessel: FSPN-85 Model No. - 304 SS construction - 150 PSI pressure rating - 2" flange connection - Inlet/Outlet Style 2, Side in/Bottom out - Coated

Multi Bag Example

1	2	3	4	5	6
FSPN-2500	CS	150	8	INLINE	1/16 CA

These codes describe the following vessel: FSPN-2500 Model No. - Carbon Steel construction - 150 PSI pressure rating - 8" flange connection - Inline Inlet/Outlet - 1/16" corrosion allowance

BFN Example

1	2	3	4	5	6	7
BFN	P	12	304	150	2FLG	6

These codes describe the following vessel: BFN model series - Polyloc bag style - holds one size 2 bag - 304 SS construction - 150 PSI pressure rating -

SINGLE BAG

1 Model No.
FSPN-20
FSPN-35
FSPN-40
FSPN-85

5 Inlet/Outlet Configuration
1 - Side In/Side Out - Inline
2 - Side In/Bottom Out
6 - Side In/Side Out - Offset

1 - Side In/Side Out - Inline
2 - Side In/Bottom Out
3 - Side In/Bottom Out - 90° Elbow

2 Matl. Of Const.
CS - Carbon Steel
304 - 304 Stainless Steel
316 - 316 Stainless Steel

3 Pressure Rating
150 - 150 PSI
300 - 300 PSI
XXX - Customer Specified

4 Connection Size and Type

FSPN-20 & FSPN-35	
1 NPT	1 ½ NPT
1 ¼ NPT	2 NPT
FSPN-40 & FSPN-85	
1 NPT	1 FLG
1 ¼ NPT	1 ¼ FLG
1 ½ NPT	1 ½ FLG
2 NPT	2 FLG
2 ½ NPT	2 ½ FLG
3 NPT	3 FLG
	4 FLG

6 Options
CA - Corrosion Allowance
Coated
PSJ - Partial Jacket
FSJ - Full Jacket

MULTI BAG

1 Model No.
FSPN-250
FSPN-252
FSPN-355
FSPN-800
FSPN-1000
FSPN-1100
FSPN-1300
FSPN-2000
FSPN-2200
FSPN-2500
FSPN-3000
FSPN-3500
FSPN-4000
FSPN-4200
FSPN-4500
FSPN-4800
FSPN-5000

4 Connection Size
3"- 4" FLG
3"- 4" FLG
3"- 6" FLG
4"- 6" FLG
4"- 8" FLG
4"- 8" FLG
6"- 8" FLG
6"- 8" FLG
6"- 8" FLG
8"- 10" FLG
8"- 10" FLG
10"- 12" FLG
10"- 12" FLG
10"- 14" FLG
10"- 14" FLG
10"- 14" FLG
10"- 14" FLG

2 Matl. of Const.
CS - Carbon Steel
304 - 304 Stainless Steel
316 - 316 Stainless Steel

3 Pressure Rating
100 - 100 PSI
150 - 150 PSI
300 - 300 PSI
XXX - Customer Specified

5 Connection Type
Inline
Side Out

6 Options
CA - Corrosion Allowance
Coated
PSJ - Partial Jacket
FSJ - Full Jacket

BFN

1 Model No.
BFN

2 Bag Style
P - Polyloc
S - Snap Ring

3 No. of Bags
11 = (1) #1
12 = (1) #2
13 = (1) #3
14 = (1) #4

7 Inlet/Outlet Configuration
2 - Side In/Bottom Out
6 - Side In/Side Out - Offset

4 Matl. of Const.
CS-Carbon Steel
304 - 304 Stainless Steel
316 - 316 Stainless Steel

5 Pressure Rating
150 - 150 PSI
300 - 300 PSI

6 Connection Size and Type

1 NPT	1 FLG
1 ¼ NPT	1 ¼ FLG
1 ½ NPT	1 ½ FLG
2 NPT	2 FLG
2 ½ NPT	2 ½ FLG
3 NPT	3 FLG
	4 FLG

FSI's "comprehensive manufacturing control" philosophy ensures that we will maintain our status as the industry leader in all phases of the filter business. For more information, technical consultation or details about our design capability, contact your FSI representative or our headquarters in Michigan City, Indiana.

ISO CERTIFIED

FSI®
Filter Specialists, Inc.

TO LEARN MORE ABOUT FILTER SPECIALISTS PRODUCTS, CONTACT ONE OF THE OFFICES OR VISIT OUR WEBSITE AT: http://www.fsifilters.com

USA

FILTER SPECIALISTS, INC.
SHIP: 100 Anchor Road
Michigan City, IN 46360
MAIL: P. O. Box 735
Michigan City, IN 46361
Phone: 219-879-3307
800-348-3205
Fax: 219-877-0632

Europe

FILTER SPECIALISTS INTERNATIONAL GMBH
Balterweg 3.1
D-65817 Eppstein-Bremthal
Germany
Phone: 011-49-6198-58080
Fax: 011-49-6198-580815

Central America

FSI de MEXICO
S. de R.L. de C.V.
Centeno 119-A
Granjas Esmerelda
Iztapalapa, Mexico D.F. C.P. 09810
Phone: 011-52-5-670-2224
Fax: 011-52-5-670-6068

South America

FSI SUL AMERICANA INDUSTRIAS
Rua Oneda
671 Bairro Planalto
Sao Bernardo Do Campo
Sao Paulo, Brazil
Cep 09895-280
Phone: 011-55-11-4341-6840
Fax: 011-55-11-4341-6464

There are no expressed or implied warranties, including the implied warranty of merchantability and fitness for a particular purpose not specific herein respecting this agreement or the product being sold hereunder or the

BFV-015-1001
Part No.: RMLBFVR

SINGLE BAG
ORDER INFORMATION SHEET

FSPN-85

FILTER SPECIALISTS, INC.
100 Anchor Road P.O. Box 735 (46361) Michigan City, Indiana 46360
219-879-3307 800-348-3205 Fax: 219-877-0632 www.fsifilters.com sales@fsifilters.com

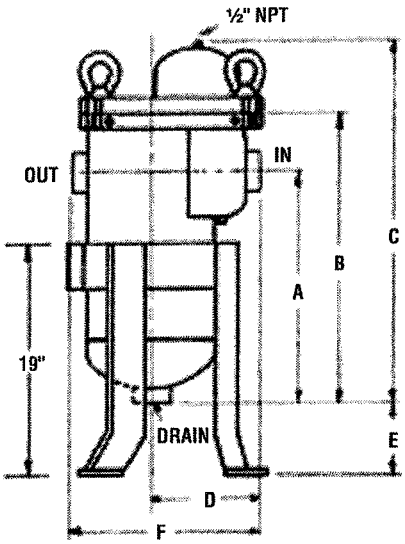

STYLE 1
INLINE—NPT

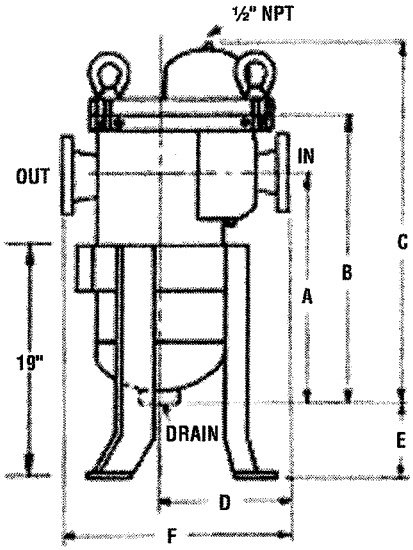

STYLE 1
INLINE—FLANGED

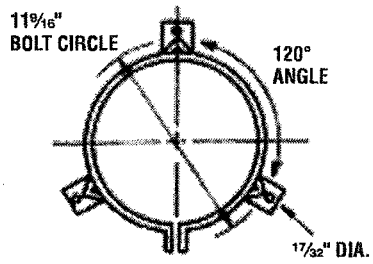

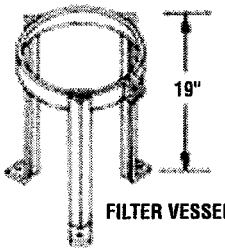

FILTER VESSEL LEGS

NOTES:
1) Design:ASME Code Section VIII, Div. 1, U or UM Stamp. National Board Optional.
2) Custom-designed models of these units can be provided for most operating requirements on special order.
3) Range of flow is dependent on type of media, particle selection required, fluid viscosity, and volume of contamination.

FSPN-85 NPT-SS

STYLE 1	A	B	C	D	E	F
3"	28"	32"	37 7/16"	8 13/16"	0 — 12"	15"
2½"	28"	32"	37 7/16"	8 9/16"	0 — 12"	14 3/8"
2"	28"	32"	37 7/16"	8 3/8"	0 — 12"	14 1/4"
1½"	28"	32"	37 7/16"	8 1/4"	0 — 12"	14 1/8"
1¼"	28"	32"	37 7/16"	8"	0 — 12"	13 5/8"
1"	28"	32"	37 7/16"	7 7/8"	0 — 12"	13 3/8"
¾"	28"	32"	37 7/16"	7 11/16"	0 — 12"	13 1/8"
½"	28"	32"	37 7/16"	7 5/8"	0 — 12"	13"

- 2" NPT drain standard
- ¼" NPT plug on inlet drain

Dimensions for reference only. Certified drawings for exact dimensions available on request.

FSPN-85 FLG-SS

STYLE 1	A	B	C	D	E	F
4"	28"	32"	37 7/16"	10"	0 — 11"	18½"
3½"	28"	32"	37 7/16"	10"	0 — 11"	18½"
3"	28"	32"	37 7/16"	9½"	0 — 11"	17 5/8"
2½"	28"	32"	37 7/16"	9½"	0 — 11"	17 7/16"
2"	28"	32"	37 7/16"	9¼"	0 — 11"	17 1/16"
1½"	28"	32"	37 7/16"	9 3/16"	0 — 11"	17"
1¼"	28"	32"	37 7/16"	9"	0 — 11"	16 11/16"
1"	28"	32"	37 7/16"	8 15/16"	0 — 11"	16 9/16"
¾"	28"	32"	37 7/16"	8 13/16"	0 — 11"	16 5/16""
½"	28"	32"	37 7/16"	8 5/8"	0 — 11"	15 15/16"

ORDER INFORMATION Check appropriate boxes

Design Pressure:	☐ 150 PSIG ☐ 300 PSIG ☐ Other
Design Temperature (F°):	☐ Max _____ Min _____
Construction Material:	☐ Carbon Steel ☐ 304 Stainless Steel ☐ 316 Stainless Steel ☐ Other _____
Basket Materials:	☐ 304 Stainless Steel (Standard) ☐ 316 Stainless Steel ☐ Other _____
Gasket Material:	☐ BUNA N (Standard) ☐ Viton ☐ Neoprene ☐ EPR ☐ Teflon Encapsulated ☐ Other _____
Lifting Mechanism:	☐ Hinge is standard
Options:	☐ Corr. Allowance _____ ☐ Coating _____ ☐ Heating Jacket

SINGLE BAG
ORDER INFORMATION SHEET

FSPN-85

FILTER SPECIALISTS, INC.
100 Anchor Road P.O. Box 735 (46361) Michigan City, Indiana 46360
219-879-3307 800-348-3205 Fax: 219-877-0632 www.fsifilters.com sales@fsifilters.com

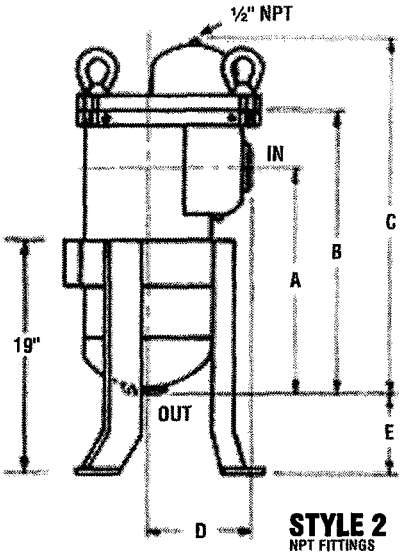

STYLE 2
NPT FITTINGS

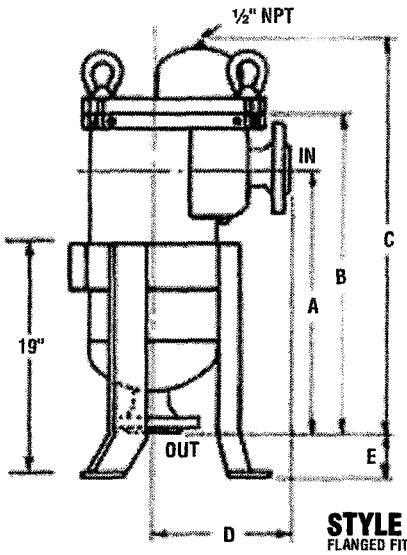

STYLE 2
FLANGED FITTINGS

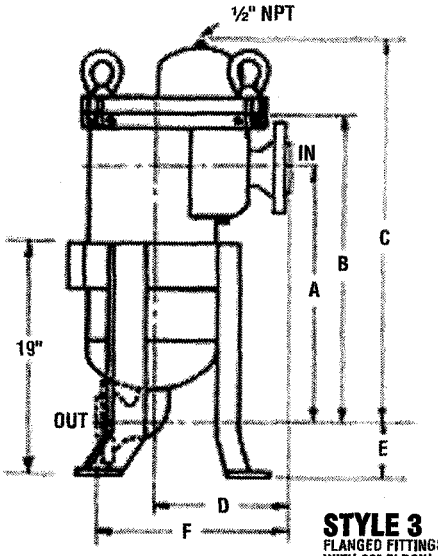

STYLE 3
FLANGED FITTINGS WITH 90° ELBOW

NOTES:
1) Design:ASME Code Section VIII, Div. 1, U or UM Stamp. National Board Optional.
2) Custom-designed models of these units can be provided for most operating requirements on special order.
3) Range of flow is dependent on type of media, particle selection required, fluid viscosity, and volume of contamination.

FSPN-85 NPT-SS

STYLE 2	A	B	C	D	E
3"	28 5/16"	32 5/16"	37 3/4"	8 13/16"	0 — 13 1/4"
2½"	28 1/8"	32 1/8"	37 9/16"	8 5/8"	0 — 13 1/4"
2"	27 15/16"	31 15/16"	37 3/8"	8 3/8"	0 — 13 1/4"
1½"	27 7/8"	31 7/8"	37 5/16"	8 1/4"	0 — 13 1/4"
1¼"	27 11/16"	31 11/16"	37 1/8"	8 1/16"	0 — 13 1/4"
1"	27 9/16"	31 9/16"	37"	7 15/16"	0 — 13 1/4"
¾"	27 7/16"	31 7/16"	36 7/8"	7 3/4"	0 — 13 1/4"
½"	27 3/8"	31 3/8"	36 13/16"	7 11/16"	0 — 13 1/4"

FSPN-85 FLG-SS

STYLE 2	A	B	C	D	E
4"	29 7/16"	33 7/16"	38 7/8"	10"	0 — 10"
3½"	29 7/16"	33 7/16"	38 7/8"	10"	0 — 10"
3"	29"	33"	38 7/16"	9½"	0 — 10"
2½"	29 1/16"	33 1/16"	38½"	9½"	0 — 10"
2"	28 7/8"	32 7/8"	38 5/16"	9¼"	0 — 10"
1½"	28 13/16"	32 7/8"	38 5/16"	9 3/16"	0 — 10"
1¼"	28 5/8"	32 5/8"	38 3/16"	9"	0 — 10"
1"	28 5/8"	32 5/8"	38 3/16"	8 15/16"	0 — 10"
¾"	28½"	32½"	37 15/16"	8 13/16"	0 — 10"
½"	28 5/16"	32 5/16"	37 3/4"	8 5/8"	0 — 10"

FSPN-85 FLG-SS

STYLE 3	A	B	C	D	E	F
4"	32"	36"	41 7/16"	10"	0 — 7 1/8"	16 3/8"
3½"	31 3/8"	35 3/8"	40 13/16"	10"	0 — 7 1/8"	15 5/8"
3"	30 11/16"	34 11/16"	40 1/8"	9½"	0 — 7 1/8"	14 3/8"
2½"	30"	34"	39 7/16"	9½"	0 — 7 1/8"	13 3/8"
2"	29 1/4"	33 1/4"	38 11/16"	9 1/4"	0 — 7 1/8"	12 5/8"
1½"	29½"	33½"	38 15/16"	9 3/16"	0 — 7 1/8"	14 1/16"
1¼"	29 5/16"	33 5/16"	38 3/4"	9"	0 — 7 1/8"	13 5/16"
1"	29 3/8"	33 3/8"	38 13/16"	8 15/16"	0 — 7 1/8"	12 13/16"
¾"	29 5/16"	33 5/16"	38 3/4"	8 13/16"	0 — 7 1/8"	12 3/16"*
½"	29 3/8"	33 3/8"	38 13/16"	8 5/8"	0 — 7 1/8"	12 3/16"*

* ¼" NPT plug on inlet drain

Dimensions for reference only. Certified drawings for exact dimensions available on request.

ORDER INFORMATION Check appropriate boxes

Design Pressure:	☐ 150 PSIG ☐ 300 PSIG ☐ Other
Design Temperature (F°):	☐ Max _____ Min _____
Construction Material:	☐ Carbon Steel ☐ 304 Stainless Steel ☐ 316 Stainless Steel ☐ Other _____
Basket Materials:	☐ 304 Stainless Steel (Standard) ☐ 316 Stainless Steel ☐ Other _____
Gasket Material:	☐ BUNA N (Standard) ☐ Viton ☐ Neoprene ☐ EPR ☐ Teflon Encapsulated ☐ Other _____
Lifting Mechanism:	☐ Hinge is standard
Options:	☐ Corr. Allowance _____ ☐ Coating _____ ☐ Heating Jacket

OIS85-015-1102
Part #: RMLOIS85

MULTI-BAG
ORDER INFORMATION SHEET

FSPN-252 FSPN-355 FSPN-800

FILTER SPECIALISTS, INC.
100 Anchor Road P.O. Box 735 (46361) Michigan City, Indiana 46360
219-879-3307 800-348-3205 Fax: 219-877-0632 www.fsifilters.com

INLINE

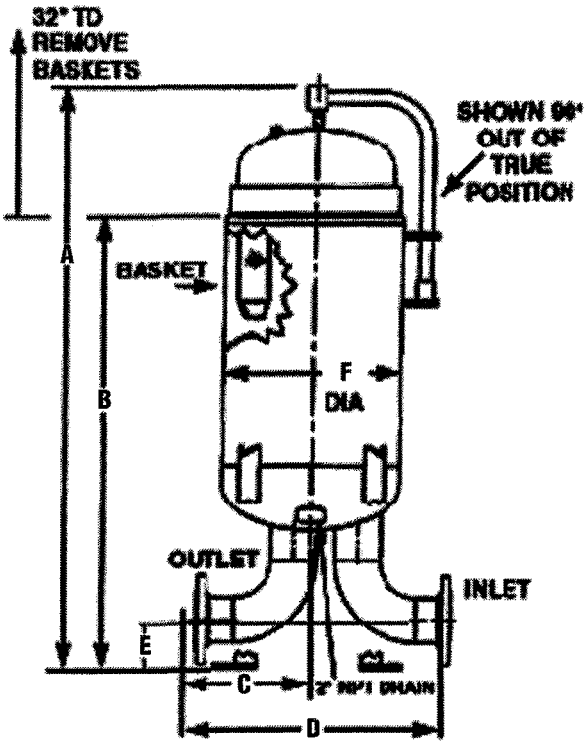

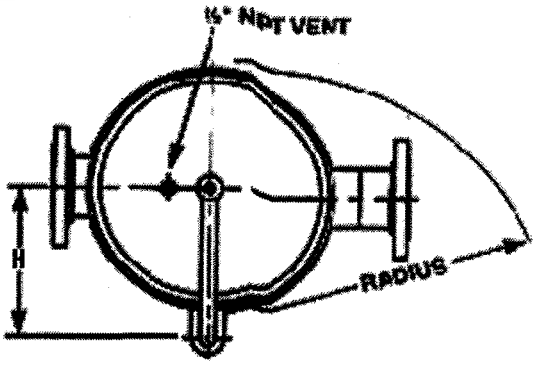

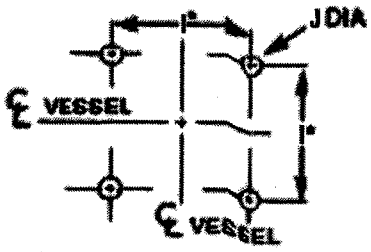

LEG BOLT DETAIL *ADD 2" FOR HEAT JACKET

Design: ASME Code Section VIII, Div I,
FSPN 252: ☐ UM Stamp
☐ National Board

FSPN 355/800: ☐ U Stamp
☐ National Board

MODEL	A	B	C	D	E	F	H	I	J	RADIUS	NO. BAGS
FSPN-252-3	64"	45"	13"	26"	4¼"	18"	11¼"	15 13/32"	17/32"	23½"	2
FSPN-252-4	64"	45"	14"	28"	5"	18"	11¼"	15 13/32"	17/32"	23½"	2
FSPN-355-3	65¼"	45"	13"	26"	4¼"	20"	12¼"	12⅜"	1"	25¼"	3
FSPN-355-4	67"	47¼"	15"	28½"	5"	20"	12¼"	12⅜"	1"	25¼"	3
FSPN-800-3	62¼"	43"	13"	26"	4¼"	22"	13¼"	13⅝"	1"	27½"	4
FSPN-800-4	64¾"	45"	15"	30"	5"	22"	13¼"	13⅝"	1"	27½"	4
FSPN-800-6	68¾"	49"	18"	36"	6"	22"	13¼"	13⅝"	1"	27½"	4

Dimensions for reference only. Certified drawings for exact dimensions are available upon request.

ORDER INFORMATION Check appropriate boxes

Design Pressure:	☐ 100 PSIG ☐ 150 PSIG ☐ Other
Design Temperature (F°):	☐ Max _____ Min _____
Construction Material:	☐ Carbon Steel ☐ 304 Stainless Steel ☐ 316 Stainless Steel ☐ Other _____
Basket Materials:	☐ 304 Stainless Steel (Standard) ☐ 316 Stainless Steel ☐ Other _____
Gasket Material:	☐ BUNA N (Standard) ☐ Viton ☐ Neoprene ☐ EPR ☐ Teflon Encapsulated ☐ Other _____
Lifting Mechanism:	☐ Hydraulic ☐ Hand Crank ☐ EZ Open ☐ Other
Options:	☐ Corr. Allowance _____ ☐ Coating _____

MULTI-BAG ORDER INFORMATION SHEET

FSPN-252 FSPN-355 FSPN-800

FILTER SPECIALISTS, INC.
100 Anchor Road P.O. Box 735 (46361) Michigan City, Indiana 46360
219-879-3307 800-348-3205 Fax: 219-877-0632 www.fsifilters.com

SIDE OUT

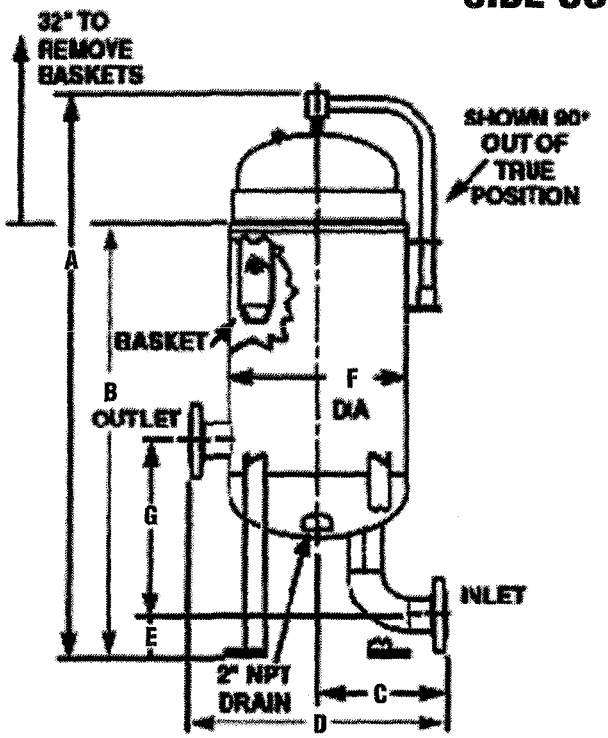

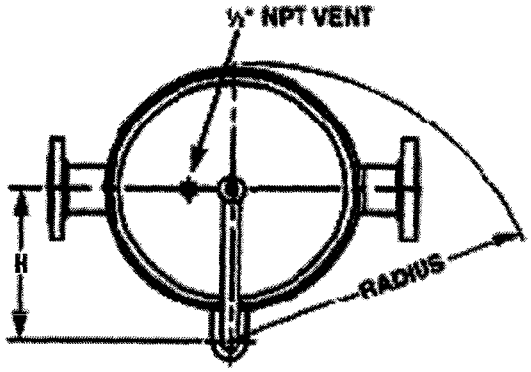

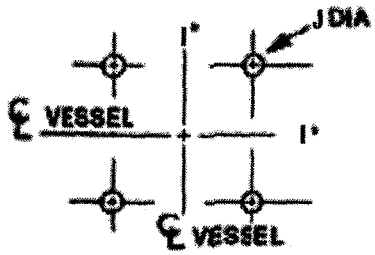

LEG BOLT DETAIL *ADD 2" FOR HEAT JACKET

Design: ASME Code Section VIII, Div I,
FSPN 252: ☐ UM Stamp
☐ National Board

FSPN 355/800: ☐ U Stamp
☐ National Board

MODEL	A	B	C	D	E	F	G	H	I	J	RADIUS	NO. BAGS
FSPN-252-3	64"	45"	13"	26"	4¼"	18"	18"	11¼"	15 13/32"	17/32"	23½"	2
FSPN-252-4	64"	45"	14"	28"	5"	18"	19"	11¼"	15 13/32"	17/32"	23½"	2
FSPN-355-3	65¼"	45"	13"	26"	4¼"	20"	19"	12¼"	12⅜"	1"	25¼"	3
FSPN-355-4	67"	47¼"	15"	30"	5"	20"	21"	12¼"	12⅜"	1"	25¼"	3
FSPN-800-3	62¼"	43"	13"	29"	4¼"	22"	18"	13¼"	13⅝"	1"	27½"	4
FSPN-800-4	64¾"	45"	15"	31"	5"	22"	21"	13¼"	13⅝"	1"	27½"	4
FSPN-800-6	68¾"	49"	18"	34"	6"	22"	24"	13¼"	13⅝"	1"	27½"	4

Dimensions for reference only. Certified drawings for exact dimensions are available upon request.

ORDER INFORMATION Check appropriate boxes

Design Pressure:	☐ 100 PSIG ☐ 150 PSIG ☐ Other
Design Temperature (F°):	☐ Max _____ Min _____
Construction Material:	☐ Carbon Steel ☐ 304 Stainless Steel ☐ 316 Stainless Steel ☐ Other _____
Basket Materials:	☐ 304 Stainless Steel (Standard) ☐ 316 Stainless Steel ☐ Other _____
Gasket Material:	☐ BUNA N (Standard) ☐ Viton ☐ Neoprene ☐ EPR ☐ Teflon Encapsulated ☐ Other _____
Lifting Mechanism:	☐ Hydraulic ☐ Hand Crank ☐ EZ Open ☐ Other
Options:	☐ Corr. Allowance _____

MULTI-BAG
ORDER INFORMATION SHEET

FSPN-1000
FSPN-1100

FILTER SPECIALISTS, INC.
100 Anchor Road P.O. Box 735 (46361) Michigan City, Indiana 46360
219-879-3307 800-348-3205 Fax: 219-877-0632 www.fsifilters.com

SIDE OUT

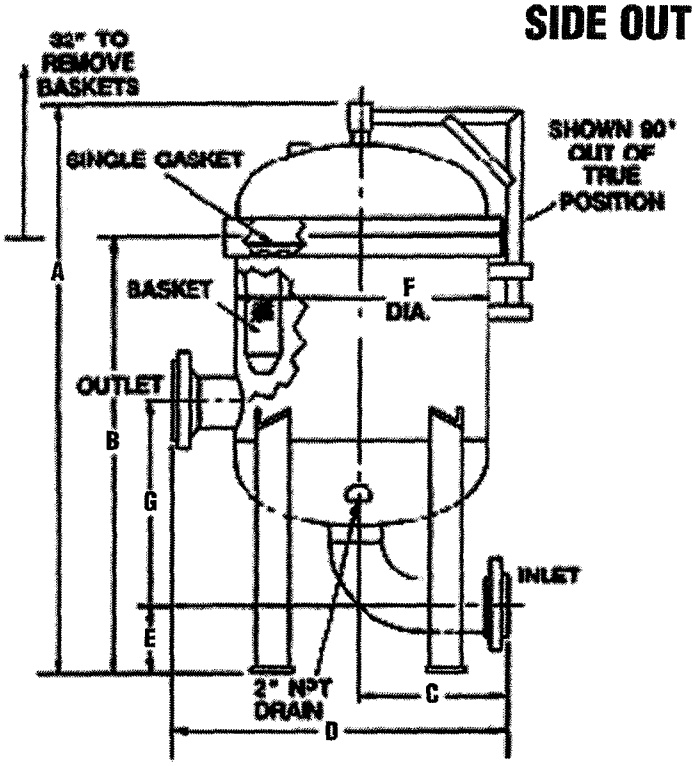

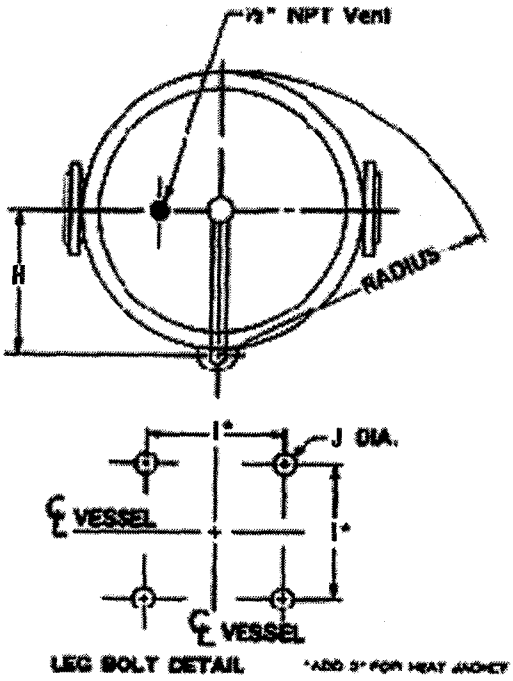

Design: ASME Code Section VIII, Div I,
☐ UM Stamp
☐ National Board

MODEL	A	B	C	D	E	F	G	H	I	J	RADIUS	NO. BAGS
FSPN-1000-3	62¼"	43"	13"	29"	4¼"	22"	19"	13¼"	13⅝"	1"	27½"	5
FSPN-1000-4	64¾"	45"	13"	29"	5"	22"	21"	13¼"	13⅝"	1"	27½"	5
FSPN-1000-6	68¾"	49"	13"	29"	6"	22"	24"	13¼"	13⅝"	1"	27½"	5
FSPN-1100-3	65"	43¾"	14"	32"	4¼"	26"	20"	15¼"	16 7/16"	1"	31½"	6
FSPN-1100-4	66½"	45¼"	14"	32"	5"	26"	21"	15¼"	16 7/16"	1"	31½"	6
FSPN-1100-6	71¼"	50"	15"	32"	6"	26"	25"	15¼"	16 7/16"	1"	31½"	6

Dimensions for reference only. Certified drawings for exact dimensions are available upon request.

ORDER INFORMATION Check appropriate boxes

Design Pressure:	☐ 100 PSIG ☐ 150 PSIG ☐ Other
Design Temperature (F°):	☐ Max _____ Min _____
Construction Material:	☐ Carbon Steel ☐ 304 Stainless Steel ☐ 316 Stainless Steel ☐ Other _____
Basket Materials:	☐ 304 Stainless Steel (Standard) ☐ 316 Stainless Steel ☐ Other _____
Gasket Material:	☐ BUNA N (Standard) ☐ Viton ☐ Neoprene ☐ EPR ☐ Teflon Encapsulated ☐ Other _____
Lifting Mechanism:	☐ Hydraulic ☐ Hand Crank ☐ EZ Open ☐ Other
Options:	☐ Corr. Allowance _____ ☐ Coating _____

MULTI-BAG
ORDER INFORMATION SHEET

FSPN-1000
FSPN-1100

FILTER SPECIALISTS, INC.
100 Anchor Road P.O. Box 735 (46361) Michigan City, Indiana 46360
219-879-3307 800-348-3205 Fax: 219-877-0632 www.fsifilters.com

INLINE

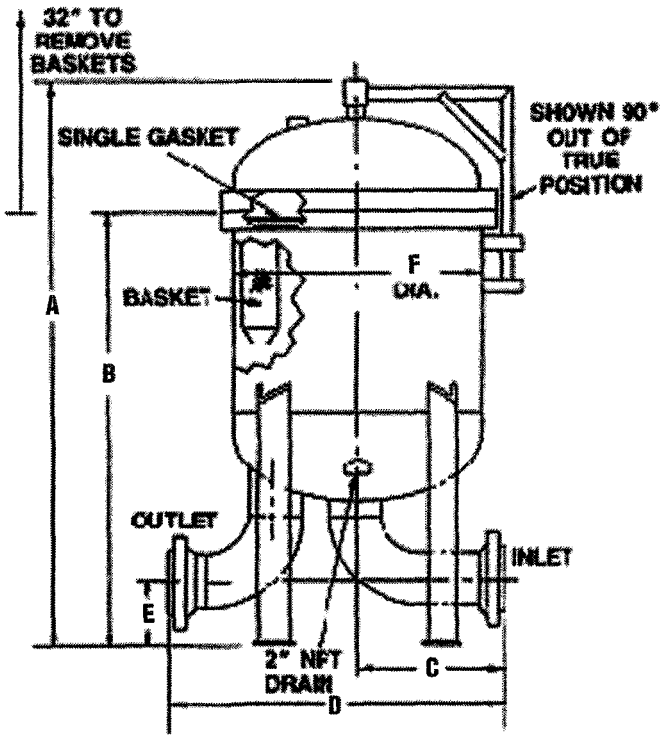

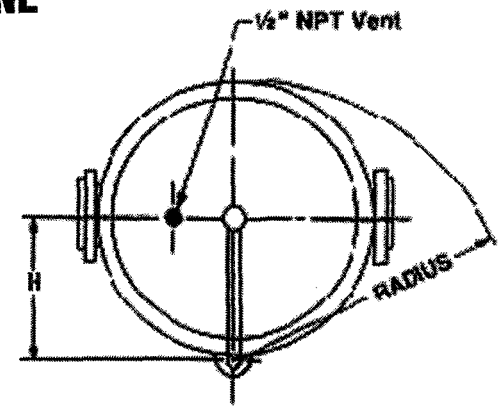

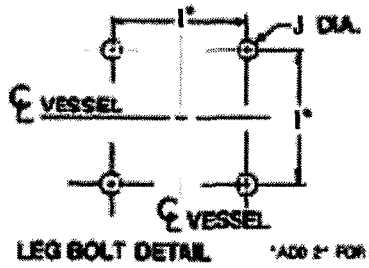

Design: ASME Code Section VIII, Div I,
☐ UM Stamp
☐ National Board

MODEL	A	B	C	D	E	F	H	I	J	RADIUS	NO. BAGS
FSPN-1000-3	62¼"	43"	13"	27½"	4¼"	22"	13¼"	13⅝"	1"	27½"	5
FSPN-1000-4	64¾"	45"	13"	29"	5"	22"	13¼"	13⅝"	1"	27½"	5
FSPN-1000-6	69½"	49"	14"	34½"	6"	24"	14¼"	15 7/16"	1"	29½"	5
FSPN-1100-3	65"	43¾"	14"	30"	4¼"	26"	15¼"	16 7/16"	1"	31½"	6
FSPN-1100-4	66½"	45¼"	14"	30"	5"	26"	15¼"	16 7/16"	1"	31½"	6
FSPN-1100-6	71¼"	50"	15"	36½"	6"	26"	15¼"	16 7/16"	1"	31½"	6

Dimensions for reference only. Certified drawings for exact dimensions are available upon request.

ORDER INFORMATION Check appropriate boxes

Design Pressure:	☐ 100 PSIG ☐ 150 PSIG ☐ Other
Design Temperature (F°):	☐ Max _____ Min _____
Construction Material:	☐ Carbon Steel ☐ 304 Stainless Steel ☐ 316 Stainless Steel ☐ Other _____
Basket Materials:	☐ 304 Stainless Steel (Standard) ☐ 316 Stainless Steel ☐ Other _____
Gasket Material:	☐ BUNA N (Standard) ☐ Viton ☐ Neoprene ☐ EPR ☐ Teflon Encapsulated ☐ Other _____
Lifting Mechanism:	☐ Hydraulic ☐ Hand Crank ☐ EZ Open ☐ Other
Options:	☐ Corr. Allowance _____ ☐ Coating _____

OIS1000-001-0102
Part #: RMLOIS1000

NEW TECHNOLOGY, DURABLE DESIGN

SIGMA SERIES

ProMinent®

Sigma Metering Pumps: Easy as 1, 2, 3

1 Operating Principle

Based on the recent technology developed for the gamma/L solenoid metering pumps. Providing unified operation and consistency across a wide range of applications.

2 Operating Modes

Basic or Microprocessor controlled

3 Performance Ranges

Sigma/1 from 5.2 to 38 gph (20 to 144 l/h)
Sigma/2 from 15.9 to 111 gph (60 to 420 l/h)
Sigma/3 from 46 to 264 gph (174 to 1,000 l/h)

The control base on the Sigma/1 pump can be rotated on either side at a 90° angle

Features and Benefits

Easy to set, adjust, and access information

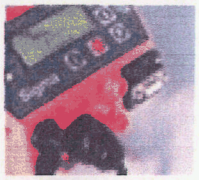

Sigma with PROFIBUS®-DP interface

LED status indicators warn of operating faults

Analog Input:

- 4-20 mA input signal can be custom scaled to suit process conditions
- Direct input signal, SCR or inverter not needed
- Can be used for proportional control

Analog Output:

- 4-20 mA output signal proportional to pump flow rate
- Use with flow monitor to verify flow

Contact/Pulse Input:

- Programmable multiplier/divider for proportional feed

Calibration:

- Calibrate to actual flow with LCD indication of pump flow
- Displays capacity in gph or l/h and totalized volume pumped
- Easy field calibration

Fieldbus Interface:

- PROFIBUS® DP option for remote monitoring, diagnostics and control

Timer:

- Integral programmable timer (i.e. daily, weekly, biweekly, weekend)
- Change operation to vary dosage on a timed basis (i.e. peak/nonpeak usage times; to bleed gas from suction line; for shock dosing of chemical)
- Run pump from different control signals (i.e. analog then contact)

Access Codes:

- Program codes to access settings; prevents unauthorized adjustments

Typical Applications:

- pH Neutralization
- Chlorination/De-chlorination
- Disinfection
- Cooling tower chemical injection
- Boiler chemical feed
- Polymer feed
- Fertigation services
- Water/wastewater treatment

PRINCIPLES OF OPERATION

The ProMinent Sigma Series pumps are motor-driven with a mechanically actuated diaphragm-type liquid end. The Sigma pumps are constructed with a corrosion resistant plastic outer housing. The Sigma/2 and 3 also have a rugged metal inner casing for components subjected to mechanical stress. The standard liquid end materials are PVDF or 316 stainless steel; both with PTFE seals.

Sigma pumps are designed with a convex DEVELOPAN® diaphragm which seals to a concave curve in the liquid end. This allows for precise metering of media with various viscosities and reduces stress for long diaphragm life.

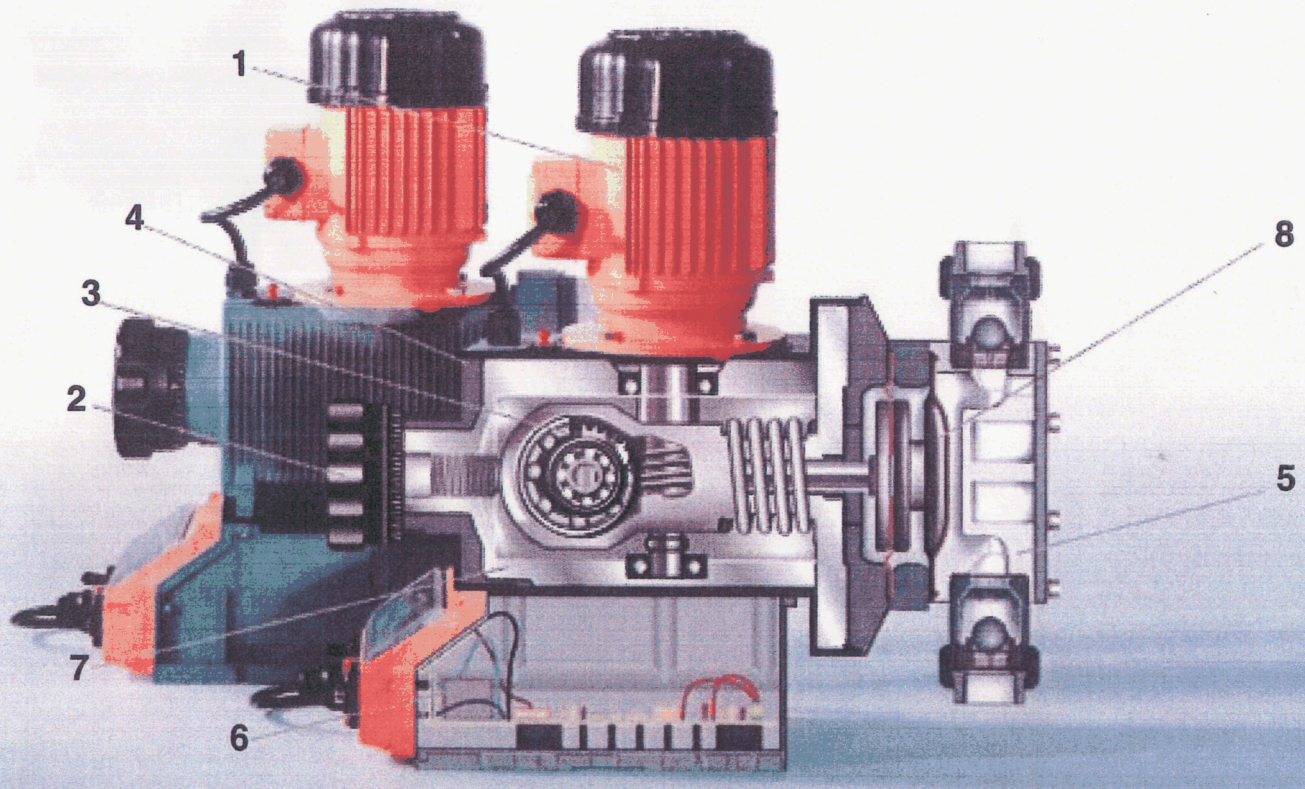

1 Motor
2 Stroke length adjuster
3 Gearbox
4 Plastic housing
5 Liquid end
6 Microprocessor controller
7 Metal inner casing (Sigma 2 and 3)
8 Diaphragm failure monitor

SPECIFICATIONS

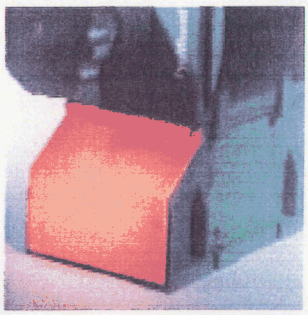

The Sigma series offers an economic basic version for simple applications

BASIC VERSION

The choice for simple, metering pump applications. The pumps may be operated manually by adjusting the stroke length knob (displacement per stroke) at a constant stroke frequency using a constant speed motor. Automatic control of displacement per stroke via analog (4-20 mA) or 3P signal is possible with optional motorized stroke positioning systems.

CONTROL VERSION

New control technology

Sigma microprocessor controlled metering pumps are programmable and display informative data for monitoring, recording and tracking. Functions include digital setting of stroke frequency, batch delivery and external control by contact, pulse or analog signal. Displays include flow rate (gph or l/h) and totalized flow (gallons or litres), cumulative stroke count, and stroke length adjustment. Options include remote monitoring, diagnostics, control (via fieldbus, analog, pulse and/or timer), access codes, fault/pacing relays, mA analog output, and flow monitoring. Control version pumps are supplied with an integral TEFC motor.

SPECIFICATIONS

	SIGMA/1	SIGMA/2*	SIGMA/3
Max. Capacity Range: Basic	5.2 - 38 gph	15.9 - 111 gph	46 - 264 gph
	20 - 144 l/h	60 - 420 l/h	174 - 1000 l/h
Max. Capacity Range: Control	5.2 - 31.7 gph	15.9 - 92.5 gph	46 - 264 gph
	20 - 120 l/h	60 - 350 l/h	174 - 1000 l/h
Max. Pressure Range	174 - 58 psi	174 - 58 psi	174 - 58 psi
Maximum Stroke Length	0.157" (4mm)	0.196" (5mm)	0.236" (6mm)
Stroke Length Adjustment Increments	1.0%	0.5%	0.5%
Repeatability (between 30-100%)	+/- 2%	+/- 2%	+/- 2%
Warranty on drive	2 years	2 years	2 years
Warranty on liquid end	1 year	1 year	1 year
Industry Standards	CE, CSA	CE, CSA	CE, CSA

* also available with a packed plunger type liquid end for higher pressure applications

DIMENSIONS

Dimensions vary based on liquid end size and material (PVDF or SS); maximum dimensions are shown.

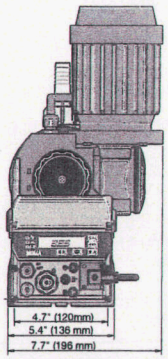

Sigma/ 1

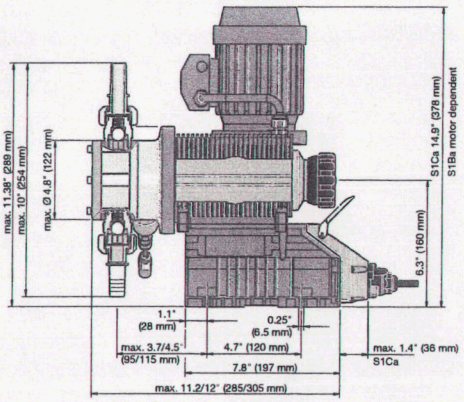

Shown with optional diaphragm failure monitor

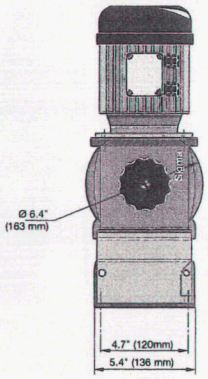

Sigma/ 2

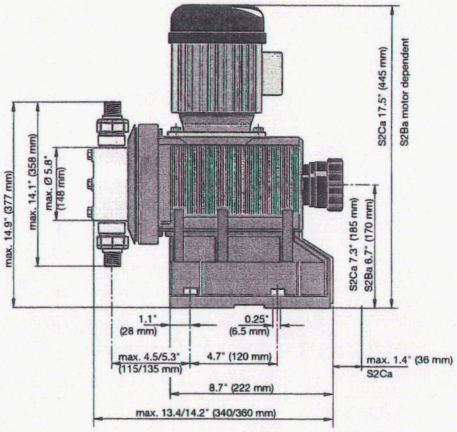

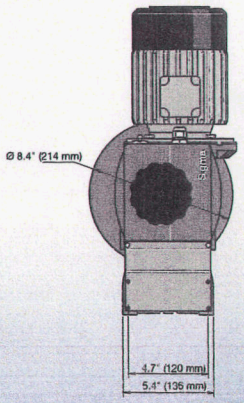

Sigma/ 3

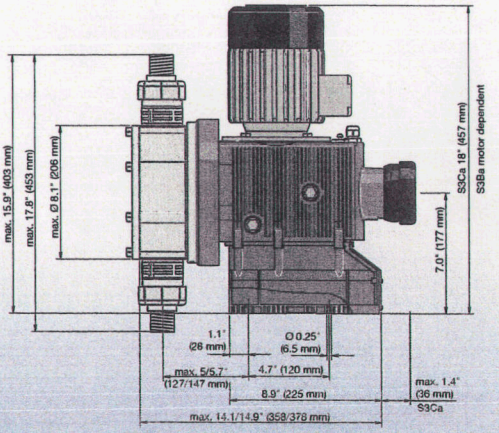

Detailed dimension sheets on request

TECHNICAL DATA

Pump type Sigma	Sigma Basic: Feed rate at max. back pressure psi	Capacity U.S. gph	Capacity l/h	Approx ml/stroke	Max. stroke rate strokes/min	Sigma Control: Feed rate at max. back pressure psi	Capacity U.S. gph	Capacity l/h	Approx ml/stroke	Max. stroke rate strokes/min	Suction lift ft	Suction lift *mWc	Max. suction pressure psi	Suction/ discharge connector NPT
Sigma/ 1														
12017 PVT	145	5.2	20	4.0	88	145	5.2	20	4.0	90	23	7	14.5	1/2" MNPT
12017 SST	174	5.2	20	4.0	88	174	5.2	20	4.0	90	23	7	14.5	3/8" FNPT
12035 PVT	145	11.1	42	4.0	172	145	11.1	42	4.0	170	23	7	14.5	1/2" MNPT
12035 SST	174	11.1	42	4.0	172	174	11.1	42	4.0	170	23	7	14.5	3/8" FNPT
10050 PVT	145	15.8	60	4.0	240	145	13.2	50	4.0	200	23	7	14.5	1/2" MNPT
10050 SST	145	15.8	60	4.0	240	145	13.2	50	4.0	200	23	7	14.5	3/8" FNPT
10022 PVT	145	6.8	26	5.1	88	145	6.8	26	5.1	90	19.6	6	14.5	1/2" MNPT
10022 SST	145	6.8	26	5.1	88	145	6.8	26	5.1	90	19.6	6	14.5	3/8" FNPT
10044 PVT	145	14	53	5.1	172	145	14	53	5.1	170	19.6	6	14.5	1/2" MNPT
10044 SST	145	14	53	5.1	172	145	14	53	5.1	170	19.6	6	14.5	3/8" FNPT
07065 PVT	102	20.6	78	5.1	240	102	17.2	65	5.1	200	19.6	6	14.5	1/2" MNPT
07065 SST	102	20.6	78	5.1	240	102	17.2	65	5.1	200	19.6	6	14.5	3/8" MNPT
07042 PVT	102	13.2	50	9.7	88	102	13.2	50	9.7	90	9.8	3	14.5	3/4" MNPT
07042 SST	102	13.2	50	9.7	88	102	13.2	50	9.7	90	9.8	3	14.5	1/2" FNPT
04084 PVT	58	26.7	101	9.7	172	58	26.7	101	9.7	170	9.8	3	14.5	3/4" MNPT
04084 SST	58	26.7	101	9.7	172	58	26.7	101	9.7	170	9.8	3	14.5	1/2" FNPT
04120 PVT	58	38	144	9.7	240	58	31.7	120	9.7	200	9.8	3	14.5	3/4" MNPT
04120 SST	58	38	144	9.7	240	58	31.7	120	9.7	200	9.8	3	14.5	1/2" FNPT
Sigma/ 2														
12050 PVT	145	15.9	60	11.4	87	145	15.9	60	11.4	90	23	7	43.5	1/2" MNPT
12050 SST	174	15.2	57	11.4	87	174	15.9	60	11.4	90	23	7	43.5	1/2" FNPT
12090 PVT	145	28.5	108	11.4	156	145	28.5	108	11.4	160	23	7	43.5	3/4" MNPT
12090 SST	174	27	103	11.4	156	174	28.5	108	11.4	160	23	7	43.5	1/2" FNPT
12130 PVT	145	41	156	10.9	232	145	34.3	130	10.9	200	23	7	43.5	3/4" MNPT
12130 SST	174	39.6	150	10.9	232	174	34.3	130	10.9	200	23	7	43.5	1/2" FNPT
07120 PVT	100	38	144	27.4	87	100	38	144	27.4	90	16	5	14.5	3/4" MNPT
07120 SST	100	38	144	27.4	87	100	38	144	27.4	90	16	5	14.5	3/4" MNPT
07220 PVT	100	69.7	264	27.7	156	100	69.7	264	27.7	160	16	5	14.5	3/4" MNPT
07220 SST	100	69.7	264	27.7	156	100	69.7	264	27.7	160	16	5	14.5	3/4" MNPT
04350 PVT	58	111	420	29.4	232	58	92.5	350	29.4	200	16	5	14.5	1" MNPT
04350 SST	58	111	420	29.4	232	58	92.5	350	29.4	200	16	5	14.5	1" MNPT
Sigma/ 3														
120145 PVT	145	46	174	31.5	86	145	46	174	31.5	90	16	5	29	1" MNPT
120145 SST	174	46	174	31.5	86	174	46	174	31.5	90	16	5	29	1" MNPT
120190 PVT	145	60.2	228	31.5	124	145	60.2	228	31.5	120	16	5	29	1" MNPT
120190 SST	174	60.2	228	31.5	124	174	60.2	228	31.5	120	16	5	29	1" MNPT
120270 PVT	145	85.6	324	31.5	173	145	85.6	324	31.5	180	16	5	29	1" MNPT
120270 SST	174	85.6	324	31.5	173	174	85.6	324	31.5	180	16	5	29	1" MNPT
070410 PVT	100	130	492	95.1	86	100	130	492	95.1	90	13	4	14.5	1-1/2" MNPT
070410 SST	100	130	492	95.1	86	100	130	492	95.1	90	13	4	14.5	1-1/2" MNPT
070580 PVT	100	184	696	95.1	124	100	184	696	95.1	120	13	4	14.5	1-1/2" MNPT
070580 SST	100	184	696	95.1	124	100	184	696	95.1	120	13	4	14.5	1-1/2" MNPT
040830 PVT	58	264	1000	95.1	173	58	264	1000	95.1	180	10	3	14.5	1-1/2" MNPT
040830 SST	58	264	1000	95.1	173	58	264	1000	95.1	180	10	3	14.5	1-1/2" MNPT

Detailed product information can be found on the ProMinent website

*** mWc = metres of water column**

Technical data subject to change

PRE-ENGINEERED SYSTEMS

Standard pre-engineered metering packages available with the Sigma series pumps include the single metering pump (M1) and dual metering pump (M2) dosing systems.

ProMinent also offers customized systems built to specification. For more information, contact ProMinent or your local Representative.

- Systems are corrosion-resistant, self contained units with chemical metering pump(s), piping, fittings, and optional accessories.
- Production capabilities include threaded, welded and thermal fusion joining systems for pipe; system assembly; wiring and equipment support and testing (with criteria for electrical, control, mechanical and aesthetic features).
- All systems are factory assembled and tested prior to shipment.

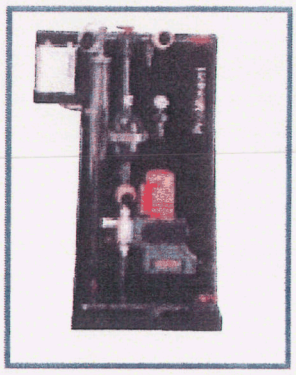

- Standard options:
  - Pipe size
  - Stand material
  - Calibration column
  - Backpressure valve
  - Pulsation dampener
  - Accumulator
  - Pressure gauge
  - Flow monitor
  - Sediment strainer
  - Pressure relief valve
- Engineering services include process design, P&ID development, CAD drawings, general arrangements, shop electrical drawings, as built, custom operation instructions and maintenance manuals.

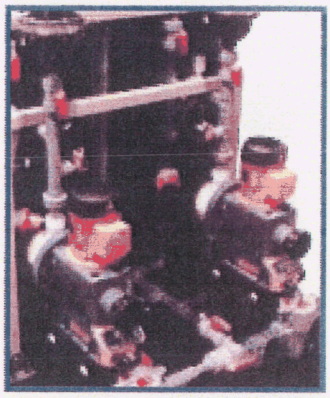

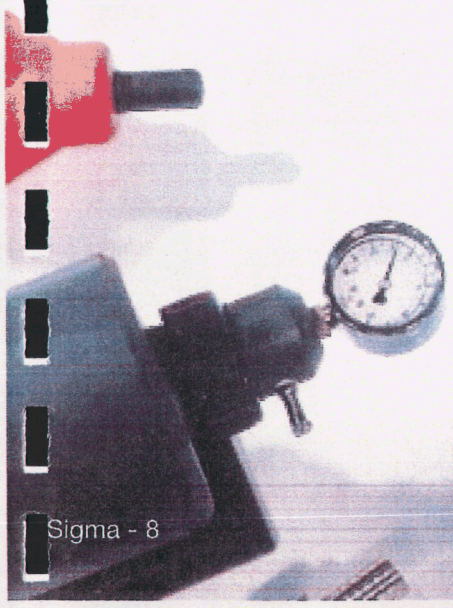

ProMinent Fluid Controls, Inc.
136 Industry Drive
Pittsburgh, PA 15275
ph: (412) 787-2484
fax: (412) 787-0704
www.prominent.cc

ProMinent Fluid Controls Ltd.
490 Southgate Drive
Guelph, Ontario N1G 4P5/Canada
ph: (519) 836-5692
fax: (519) 836-5226
www.prominent.ca

ProMinent®

Printed for U.S.A. and Canada
PT S1 001 02/03 NA
P.N. 7750200

1241 W. Calle De La Plaza
Sahuarita, Az. 85629
January 20, 2006
Phone 625 - 3327 Exhibit G-6

To Mike Wood, Rohn Householder, Steve Gay, Kaycee Conger and Lawrence V. Robertson, Jr.:

That was a good Directors meeting yesterday. I finally asked Rohn directly why he was in favor of spending about $1,700,000 for a central arsenic treatment system instead of about $700,000 for arsenic treatment at each well. I can now start answering his concerns and pushing other people to supply what information I am unable to provide.

I am trying to put in print what I think Rohn said. If I am wrong, or have left out inportant facts, let me know, or when Rohn testifies at the later hearings a court reporter will get it correct what his ideas are. I think, and remember, what he said as:

1. In general central units are better.
2. Central units are cheaper to operate.
3. He did not want to get into the pros and cons of operating a centrall vs at each well because he did not know the operation, problems, maintenance, etc.

For the past six months to a year my letters and comments to Rohn and the others has been on the operational problems involved with Westland's propossal, and the excessive cost. This is also what many of my exhibits as an intervenior would cover.

Central units are cheaper to operate.
The central unit Westland is proposing will cost roughly $1,000.000 more than the units at each well. We have a proposal to loan L.Q.S. money at 8% so just to cover the interest the central unit must be $80,000 per year cheaper to operate. If we are thinking of paying back the loan in ten years we need the central unit to be another $100,000 cheaper to operate per year.

I will try to come up with costs, but I doubt if there is any chance I will come up with cental unit cost $180,000 cheaper per year. If I do come up with this type of saving, or anyone else can show us that type of savings, I would be glad to change my vote to a vote for a central unit and withdraw my intervention proceedings. (Note that Ron Kozoman

on his page 9 of testimony states, "The estimated annual operating expense associated with arsenic treatment is $21,000 for the initial year.")

If we can't come up with savings in the range of $180,000 per year with a central unit, either Rohn or Mike might consider changing their vote to arsenic units at each well.

Yours truly,

John S. Gay

John S. Gay

1-20-06 Doc

1241 W. Calle De La Plaza
Sahuarita, Az. 85629
September 14, 2005
Phone (520) 625 - 3327

Judge Jane L. Rodda
Administrative Law Judge
Arizona Corporation Commission
1200 W. Washington Street
Phoenix, Arizona 85007

Exhibit G-7

RE: Las Quintas Serenas Water Co. ("LQS")
Docket Nos. W-01583A-04-0178, W-01583A-05-0326 and W-01583A-05-0340

Dear Judge Rodda:

I have problems and I hope you can help me, or direct me to the proper people. My wife and I have lived at the above address since about 1965. We live in the LQS franchise area and have always received our water from LQS. I am a graduate mining engineer and I worked for a while as a design engineer for the U S Navy on mostly submarine piping and hydraulics. So I have some knowledge of handling fluids. I have no legal experience so I have no idea how to write this letter, or to whom.

In Docket No. W-01583A-04-0178 on March 9, 2004 LQS filed an application with the Commission for a permanent rate increase. On or before January 15, 2005 LQS was ordered to use the new rate schedule. According to paragraph number 30 in this rate case the Staff thought LQS was getting a 2.9 % increase in revenue over the test year. Actually LQS spent over $40,000 on the rate case and we got a rate decrease so we have had to sell tens of thousands of dollars of investments to pay our employees and purchase power to run the wells.

In paragraph number 43 in this rate case the Staff calculated preliminary estimate of arsenic removal of $186,992 in capital costs. LQS has a Westland Resources report that the cost for arsenic removal will be about $1,700,000. I have been President, Vice President, Operator, Co - Operator Manager, and Treasurer at various times for LQS for about forty years, and a Director for that entire time, and I felt the $1,700,000 system was poorly designed and would not be reliable so I got information on a

system which would be reliable costing about $600,000 and presented this to the two Plelps Dodge Directors. At first one of them said that was just a salesman's idea so my wife and I paid Miller Brooks Environmental over $7,000 to do the engineering and they came up with what I think is a good system with costs just over $700,000. This would be a much better system and $1,000,000 less in cost.

This date was DRAFT of letter + actual letter dated aug 31, 200 JSG

LQS attorney Lawrence V. Robertson in his August 22, 2005 letter to Jason Gellman of the Arizona Corp. Comm. Legal Division had a proposed schedule for Docket W-01583A-05-0340 which looked to me like December 9, 2005 would be the first time I as an Intervenor would be able to present my case. After seeing that LQS had to spend over $40,000 to answer all of Staff's requests it looks like LQS could end up spending lots of money on the engineering, etc requirements Staff probably will require. And then if Staff goes for the $700,000 system , or Staff's preliminary $186,992 system, LQS could have spent a lot of money for nothing. So as soon as possible I would like Staff to know that an intervenor will at some time like to present a system with costs around $700,000.

Is there someone I should notify now that I plan to be an Intervenor on December 9th, or preferably sooner if possible?

Yours truly.

John S. Gay

John S. Gay, LQS water customer.

cc: Steve Gay, LQS Manager
Rohn Householder, LQS Director
Mike Wood, LQS Director

9-14-05 Doc

1241 W. Calle De La Plaza
Sahuarita, Az. 85629
January 9, 2006
Phone 625 - 3327 Exhibit G-8

To Mike Wood, Rohn Householder, Steve Gay and Kaycee Conger;

NEW WELL SITE

1. I have known about Santa Cruz Meadows subdivision for many years in a vague way, but when I saw the large piece of ground being cleared I was suprised. Recently when talking to Steve about L.Q.S. business he showed me the plans for the subdivision and said he had an extra copy so I took the set of plans home to look over. I had no idea it would be so large: it is for 239 lots. (Witness Kozoman Schedule H-2 lists customers on 9-30-03 as 700 of 5/8 meter, a few of 1", 1.5", etc and 150 standpipe customers for a total of 897 customers.) It is easy to see that the addition of 239 customers should change L.Q.S. water use quite a lot so I think we should consider seeing if we can obtain a well site on this property.

2. When I look over the Santa Cruz Meadows plans I see that most of their water system pipes will be 8". Most of the old L.Q.S. system is 6". This might not mean much to Rohn, but to get the rough idea of water flow capacity in pipes one squares the diameter. Therefore, 6x6 =36 and 8x8=64 so in rough terms 8" pipe system will cary almost twice what a 6" system will.

3. The set of drawings that Steve gave me had Steve signing for L.Q.S. on May 30, 2003, and then after revision #1 March 29, 2005, and there was a place for L.Q.S. Re-Acceptance after revision #2 but on my copy Steve had not signed. Therefore, I do not know if it is too late to negotiate a well site, but as far as I am concerned it is worth a try.

4. Charlie Barter, a L.Q.S. Director, until his death, worked for Montgomery and Associates and they were the ones that picked the location and oversaw the drilling of our #7 well. I know I was well pleased with their work and I believe Steve felt the same. The #7 location was picked with hopes that the nitrates from the sewage plant would be to the east and the problems from the mines would be to the west. (I went to a well-attended Nancy Freeman meeting today and she is a pusher who wants some of the treated sewage water to be used on golf courses in the future and not be an item of our concern.) To me, there are several possible well locations in Santa Cruz Meadows and they are

all farther away from the mines than either #6, or #7 wells.

5. I believe a replacement well has to be drilled within 660 feet of the old well and possibly the ADWR would only allow an approved pumping rate the same as the old well registered gallons per minute. If this is the case, if our #5 well fails we might want to drill the replacement well on the site as we have pressure tank, piping, electricity, fencing, SCADA all there and we might also have our arsenic system in place, and this well has the lowest arsenic level of our three wells. See Steve's 12/29/05 letter to us as the second and third paragraph on page 2 cover #5 well.

6. I have Arizona Department of Water Resources Form 55-40 "Notice of Intent to Drill, Deepen, Replace or Modify a Well" and the form to fill out. The fee is $150 and I have this info as I plan to drill a well soon near St David. I phoned the well driller in October of 2005 and their first available date to drill is this coming March. Therefore, if I can get either Mike or Rohn to agree with me it is my suggestion we have Steve get going to find out what size well we are allowed to replace #5 with, the costs, and when we might get the well drilled. I do not want to drill now, as #5 is working fine, but we directors should have the info in front of us so we can move quickly which ever way we want to go if #5 fails. About a month ago when Steve was gone I checked the system and found that #5 was the well running and I was surprised as Steve has been using #7. When I got to the office I found a note saying he had put #5 in lead because he would be gone and it was the **most reliable.**
(I have a copy of a Nov. 30, 2003 Invoice from Montgomery & Assoc. For Professional hydrogeological services: project management and planning; initial preparation of technical specifications for ST-5 replacement well; and teleconferences with S. Gay concerning alternatives for ST-5 replacement.)

OPERATION OF L.Q.S. WHEN STEVE LEAVES

7. Steve will be gone on April 1st. and Gary Hatcher has given notice, so after April 1st Mike, Rohn, Kaycee, and myself will be operating the system unless we have people trained at that time. Steve's 12/29/05 letter has under #2 Kaycee's wages, and under #3 asking about replacement labor, and under #6 how poorly the system is operating, and #11 on Grumpy customers. One item that needs to be added and emphasized is that Mike and Rohn will be entirely in charge of this. I will be glad to offer ideas and suggestions, but the entire operation will be run by the

two of them. I have spent much time, written many letters to the two men explaining how we can have a more reliable arsenic system for around $600,000 and they have never answered any of my letters and they are still going for a $1,600,000 system.

8. I do not know if Rohn and Mike are even aware of some of the items we now have in place to make sure things run well.

a. Kaycee, Steve, Gary, and myself all have keys to enter the well yards, standpipe locked area, and office and we all have some idea what is going on in each area. My understanding is that neither Mike nor Rohn have keys to enter these points and I doubt if they would know what was going on in most places if they did get in.

b. At Steve's house and at my house we both have pressure gauges attached to the water system so we have some idea from our homes how things are going. There is electrical switch gear so if the water pressure gets below a set point a gong rings at Steve's, and the phone rings at both his and my houses with a recording saying, "Low Water Pressuse", and I believe it keeps repeating this message.

c. Usually when Steve will be out of town he lets me know and I check the system. An example was December 17th, a Saturday, so I went to each well, noted water pressure, run time, etc. and then went to the office to verify. Most of the time I do not turn in my hours as I figure my monthly Director's fee should cover this.

d. Item "c" is usually on weekends. When Steve is on vacation Kaycee usually keeps tabs during the week with possibly Gary and/or me checking the field and reporting to her. Then I usually handle the weekend.

9. Unless Mike and Rohn have people trained and in place when Steve and Gary leave, I will be sure that Mike's and Rohn's home phones and addresses are well displayed and I will make it plain that the two are operating the system.

MONEY PROBLEMS

10. Steve's 12/29/05 letter talks about money under #1 and #6.
I see that on 8/15/05 Check #7580 went to Atty. Lawrence Robertson for "Telephone conferences; Bank - Loan Arrangements $302.50." On 9/8/05 more Loan Discussions w/ Bank $522.50. Same day another

$495.00 on the same subject. Again on 9/8/05 Meeting Commerce Bank --Possible loan arrangements $797.50, and on 10/17/05 Preparation/Participation w/Alliance Bank for $330.00. This is a lot of money to pay out for a lawyer.

On September 2, 2005 Commerce Bank sent John Gay, President of LQS, a letter telling of a $1,650,000 Loan at 8%.

Do these various people know that the ARTICLES OF INCORPORATION OF LAS QUINTAS SERENAS WATER CO. were filed with the Arizona Corporation Commission and recorded in Book 1146 from page 479 to 485 and under ARTICLE VI it states:

The highest amount of indebtedness or liability to which the corporation may at any time subject itself is the sum of Six Hundred Sixty-Six Thousand ($666,000) ------Dollars. (JSG File #89)

#1 should page #6 Well

11. Steve's 12/29/05 letter doesn't indicate what months this report covers. In #6 he states LQS sold $28,257 in stocks to cover expenses in ~~Nov. 2005.~~ Kaycee's "Month End Summary December 2005" lists the same Intel $4,945.42, and SBC Comm. $4,808.36, and John. & Johnson $18,504.21, but Kaycee also lists a second sale of Johnson & Johnson of $18,051.90. In order that Mike and Rohn understand the seriousness of money under their direction they need to know about this second Johnson & Johnson ($18,051.90), plus we sold Ivy Bond Fund A for $10,761.06 on 4/18/05, plus Scudder Short Term Bond Fund for $10,787.50 on 3/31/05, plus T Rowe Price Mid Cap Growth for $27,059.63 on 3/24/2005. If I have added it correctly **that is $94,917 we have used from our savings in less than one year, and not added one capital improvement.**

12. If I am correct I show we received Profit & Loss statements for May, June, July, and August all on 9-22-05. As I remember when Rohn first became a Director he wanted monthly statements and I believe Kaycee told him she couldn't do it until the tax person gave her the cost to charge each month. In any case I maintain we must have more up-to-date accounting, even if isn't complete. I never get any feed back from either Mike or Rohn so I do not know if they are aware what is going on and if one of them is authorizing these very frequent and large checks for attorney and accounting fees. (See attached Transaction Detail Report.)

13. If someone feels we must spend money wildly to show the Arsenic people we are working toward a proper goal, then have Westland

Resources work on #5 well because they and I, as an intervenor, plan to have the arsenic unit there as a separate unit.

John

\hnzxcx 1-9-06 Doc John S. Gay

Copy

1241 W. Calle De La Plaza,
Sahuarita, Az. 85629
April 18, 2005
Phone 625 - 3327

Exhibit G-9

Mr. Mike Redmond, R.S., PDEQ
Pima County Dept. of Environmental Quality
150 West Congress Street
Tucson, Az. 85701 - 1317

Dear Mr. Redmond:

1. We have received Eric Shepp's letter of April 7th, and I need help.

2. Las Quintas Serenas Water Co. (LQS) has an arsenic problem that we need to correct. We have used Buck Lewis as our engineer for about 20 years but Buck has retired so we looked for a new engineer and signed a contract with Westland Resources, Inc. on January 10, 2005 to do some engineering for us.

3. On March 9,2004 LQS filed an application with the Arizona Corporation Commission for a permanent rate increase. On Jan. 4, 2005 Decision No. 67455 was Docketed. LQS spent about $40,000 on this rate case and instead of a rate increase it turned out to be a rate decrease. We spent this $40,000 and in the end we had not improved our water system any, or helped our customers in any way. "Findings Of Fact" #42 gave the values of arsenic in our three wells and stated that our wells are above the new arsenic maximum contaminant level which will be required on January 23, 2006.

4. In Findings Of Fact #43 the Commission Staff calculated preliminary estimates of cost for LQS's arsenic removal. Staff estimated capital costs and operation and maintenance costs, however made no finding in this Decision as to the reasonableness of Staff's estimates, and no suggestions or help was given to finance the arsenic removal.

5. The Commission ordered that LQS submit its detailed arsenic removal plan to ADEQ or the PCDEQ by February 28, 2005 for review and approval. Westland worked hard and produced LAS QUINTAS WATER COMPANY WATER SYSTEM AND ARSENIC MASTER PLAN dated 3-24-05 by Kara Festa. This was after the date ordered by the Commission so we

distributed it immediately even though we could see errors. (Our name is Las Quintas Serenas Water Co. not Las Quintas Water Co.) The most major problem I see with Westland's report is that in Appendix A they estimate costs as $1,789,375, and with the quotes we have from Severn Trent Services I think we will have a more reliable system for under $600,000.

6. If we spend the $1,789,375 I feel that LQS will have to more than double each water customer's monthly water costs. I would expect this to bring lawsuits from stockholders of LQS or from our customers, especially when it can be shown that the $600,000 plan gives more reliable water service.

7. I have been President, Vice President, Co-Manager, or Director of LQS since about 1966. Since The Anaconda Co. took over LQS in about 1966 and I became President we have made many improvements and had no serious complaints to our water service. Phelps Dodge is now the major stockholder and two of our three Directors who direct operations are Phelps Dodge employees. (I am the third Director.) I have not been able to convince the other two Directors that my $600,000 plan has any merit. In fact, we have not even been able to agree whether we are in compliance on our storage. So that is the first thing I want to get ironed out. Here is where I need your help.

8. **System Storage** Az. Revised Statutes R18-4-503 Storage requirements as it pertains to LQS. " *.....the minimum storage capacity shall be equal to the average daily demand during the peak month of the year. Storage capacity may be based on existing consumption and phased in as the water system expands....."* *"The minimum storage capacity for a multiple-well system may be reduced by the amount of the total daily demand minus the production from the largest producing well."*
Our peak month was June to July 2003 with 21,349,000 gallons / 30 days = 711,633 average gallons per day. We have storage of 60,000 + 30,000gallons = 90,000 total.
This is where I need help. Our largest well is 850 gpm x 60 min. x 24 hours = 1,224,000 gallons. This 711,633 average daily demand – 1,224,000 gal. = minus 512,367 gallons, so is our required storage zero gallons?

9. **System Storage -- ADEQ Booklet #9 ?**
"The minimum storage capacity for systems not providing fire protection should approximate the annual average daily consumption. This capacity may be reduced when the source and treatment facilities have sufficient capacity, with standby power capability, to supplement peak demands of the system." Here again I need help. Just how much capacity does ADEQ require from LQS?

10. **Westland 2.3 Water Source Capacity**
"The ADEQ standards require that the well system be capable of providing peak day demand (PDD) for the entire system with the largest well out of service."
#6 well electric 350 gpm x 60 min x 24 hr = 504,000 gallons.
#6 well Nat. gas 425 gpm x 60 min. x 24 hr. = 612,000 gallons.
#5 well electric 200 gpm x 60 min. x 24 hr. = 288,000 gallons
288,000 + 504,000 = 792,000 gal. with #6 on electric.
288,000 + 612,000 = 900,000 gal. with #6 on Natural gas.
One day in May we pumped 910,000 gallons which is our PDD.

11. **NOW WE GET TO THE BIG QUESTION.** With Westland's $1,789,375 plan #7 well will no longer pump into the system. Also #6 well no longer pumps into the system. Only #5 well will pump into the system. So how much storage is required with their system?
With Severn Trents $600,000 system all three wells will still pump water into the syetem.

Yours truly,

John S. Gay

John S. Gay

cc: Steve Gay, LQS Manager
Rohn Householder, LQS Director
Mike Wood, LQS Director
Lawrence V. Robertson, LQS Sttorney
Westland Resources

4-18-05 DOC

Exhibit G-10

3	125.00
4	225.00
6	350.00
Standpipe	10.10

Q.15 WHAT ARE THE PROPOSED ACRM CHARGES TO SERVICE THE DEBT, AND OVER WHAT CUSTOMER BASE ARE THE CHARGES SPREAD?

A.15 I used the customers at the end of the test year, namely September 30, 2003. Thus, the customer base has been annualized to the year end number of customers. The monthly charges for the ACRM charges by meter size are:

Meter Size	ACRM Charges
5/8 x 3/4	$ 21.99
3 / 4	32.98
1	54.97
1 1/2	109.95
2	175.92
3	351.83
4	549.74
6	1,099.48
Standpipe	21.99

Combining the current monthly minimum and the ACRM charges results in the following total monthly charges:

Meter Size	Monthly Minimum	ACRM Charge	Total Monthly Charge

5/8 x 3/4	$ 10.00	$ 21.99	$ 31.99
3/4	22.50	32.98	55.48
1	25.00	54.97	79.97
1 1/2	55.00	109.95	164.95
2	70.00	175.92	245.92
3	125.00	351.83	476.83
4	225.00	549.74	774.74
6	350.00	1,099.48	1,449.48
Standpipe	10.10	21.99	32.09

Q.16 WHY DID YOU USE THE NUMBER OF CUSTOMERS AT SEPTEMBER 30, 2003, AND NOT THE MOST RECENT NUMBER OF CUSTOMERS?

A.16 There are a greater number of customers in 2005 than there were at September 30, 2003. However, if I were to use the most recent number of customers, I would also propose a number of adjustments to other accounts.

It is my understanding that the Commission has allowed the Company's prior rate case to be re-opened only for the limited purpose of considering the proposed recovery of debt service and certain operating expenses associated with arsenic treatment.

If I were to use the most recent number of customers, I would also request the property taxes on the higher revenue, as the revenue requested in the instant case will cause property taxes to increase substantially, even with the decrease in the assessment

Las Quintas Serenas Water Company With 8.00% Loan
Present and Proposed Rates Including Estimated Surcharge for ARSM Surcharge
Estimated Operation & Maintenance Expense Associated with Arsenic Treatment Plant
Test Year Ended September 30, 2003

Exhibit
Schedule H-3
Page 1
Witness: Kozoman

Line No.	Customer Classification and Meter Size		Present Rates	Proposed Rates (a)	Percent Change
1	**Monthly Usage Charge for:**				
2	5/8 x 3/4 Inch		$ 10.00	$ 31.99	219.90%
3	3/4 Inch		22.50	55.48	146.58%
4	1 Inch		25.00	79.97	219.88%
5	1 1/2 Inch		55.00	164.95	199.91%
6	2 Inch		70.00	245.92	251.31%
7	3 Inch		125.00	476.83	281.46%
8	4 Inch		225.00	774.74	244.33%
9	6 Inch		350.00	1,449.48	314.14%
10	Standpipe		10.10	32.09	217.72%
11					
12	Gallons included in Minimums all meters but 4"			-	
13					
14	Tier 1: Gallons upper limit				
15	5/8 x 3/4 Inch	All (a)	4,000	4,000	N/A
16	34 Inch	All (a)	4,000	4,000	N/A
17	1 Inch	All (a)	40,000	40,000	N/A
18	1.5 Inch	All (a)	100,000	100,000	N/A
19	2 Inch	All (a)	150,000	150,000	N/A
20	3 Inch	All (a)			N/A
21	4 Inch	All (a)	400,000	400,000	N/A
22	6 Inch	All (a)	400,000	400,000	N/A
23	Standpipe	All (a)	4,000	4,000	N/A
24					
25	Tier 2: (Gallon upper limit, up to, but not exceeding)				
26	5/8 x 3/4 Inch	All (b)	23,000	23,000	N/A
27	3/4 Inch	All (b)	23,000	23,000	N/A
28	1 Inch	All (b)	40,001	99,999,999	N/A
29	1.5 Inch	All (b)	100,001	99,999,999	N/A
30	2 Inch	All (b)	150,001	99,999,999	N/A
31	3 Inch	All (b)		99,999,999	N/A
32	4 Inch	All (b)	400,001	99,999,999	N/A
33	6 Inch	All (b)	400,001	99,999,999	N/A
34	Tier 3: (Gallon upper limit, up to, but not exceeding)				
35	5/8 x 3/4 Inch		23,001	23,001	N/A
36	3/4 Inch		23,001	23,001	N/A
37	1 Inch		99,999,999	99,999,999	N/A
38	1.5 Inch		99,999,999	99,999,999	N/A
39	2 Inch		99,999,999	99,999,999	N/A
40	3 Inch		99,999,999	99,999,999	N/A
41	4 Inch		99,999,999	99,999,999	N/A
42	6 Inch		99,999,999	99,999,999	N/A
43	Commodity Rates (per 1,000 gallons in excess of gallons in Each Tier)				
44	All	Tier 1	$ 0.950	$ 1.094342290	15.19%
45	All	Tier 2	1.150	$ 1.294352290	12.55%
46	All	Tier 3	1.350	$ 1.494352290	10.69%
47	All	Tier 4	1.350	$ 1.494352290	10.69%

Exhibit G-11

Page 1

April 27, 2005

John Gay makes the following motion:

In Westland's Las Quintas Water Company Water System and Arsenic Master Plan it states under 4.5, "A variety of options were considered to address these concerns including arsenic treatment at each well site, ..." "In general, it is most efficient to treat or test well water by concentrating numerous sources into a single centralized system before pumping into the distribution system." Westland gave us no figures or facts to back up this statement so I would like to pay Westland to present these facts and figures to us, so everybody at Las Quintas Serenas Water Co. can see if there are any advantages to their $1,789,375 system over the Severn Trent units at each well for a total cost of around $600,000.

Table 3. Existing Storage Requirements

Existing Capacity (Gallons)	Existing Storage Requirement (Gallons)	Existing Storage Deficit (Gallons)
90,000	490,820	400,820

4.5. EXISTING SYSTEM INFRASTRUCTURE REQUIREMENTS

Page 2

The approach to the construction of new infrastructure to serve the existing water system must take into account the various requirements to provide a comprehensive plan that addresses the issues related to water quality, and storage deficiencies. Long-term well capacity issues will be addressed under the future system requirements section, as it is assumed that the existing well capacity will be sufficient for the short-term needs of the water system. The recommended infrastructure as discussed in this chapter is shown on Exhibit 1.

The first priority for Las Quintas Serenas Water Company is to construct facilities that will allow the water system to provide water meeting the new arsenic standard. The secondary priority is to address the shortage in storage capacity. A variety of options were considered to address these concerns including arsenic treatment at each well site, various combinations of centralized arsenic treatment, and various storage tank locations. The alternative selected to address existing system requirements allows the integration of both arsenic treatment and storage facilities into one water system project. In general, it is most efficient to treat or test well water by concentrating numerous sources into a single centralized system before pumping into the distribution system. The water system facilities proposed for the existing system include a combined treatment system for Well Nos. 6 and 7, with a new storage tank and booster station for delivering treated water, and a small separate treatment system at Well No. 5. An Opinion of Probable Construction Cost (OPCC) for the existing system facilities is provided in Appendix A.

4.5.1. Well Nos. 6 and 7 Arsenic Treatment

March 2005 3/24/05
Signed by Kara Festa

The existing system infrastructure to address arsenic concerns at Well No. 6 and 7 will include a new 1,275-gpm iron-media adsorption arsenic treatment system, 400,000-gallon storage tank, and 850-gpm transfer booster station at the existing Well No. 6 site. A new 8-inch water main approximately 2,500 feet in length will be required to connect Well No. 7 to the site. The Well No. 6 site was selected for the treatment system due to visibility concerns at Well No. 7. Site piping will allow either or both of the wells to deliver directly into the arsenic treatment system. The treated water meeting the new arsenic standard will fill a new 400,000-gallon tank located at the Well No. 6 site. A variable frequency drive (VFD) transfer booster station with a capacity of 850 gpm will then pump treated water from the tank into the system. A concept site layout for the new facilities at the Well No. 6 site is shown on Exhibit 2.

The arsenic treatment unit constructed at the Well No. 6 site will be a dual-vessel layout for redundancy purposes. The actual vessels will be sized to accommodate the total capacity of both wells operating

Applicant's Exhibit A-1 Pg 9

OPINION OF PROBABLE CONSTRUCTION COST

Applicant's Exhibit A-1
Appendix A

Project Name:	Las Quintas Serenas Existing System Upgrades				
Project No.	1148.01 A 8000	**Prepared by:**	JL	**Date:**	03/24/05
Location:	Sahuarita, Arizona	**Checked by:**	KF	**Date:**	03/24/05
Description:	Combined Arsenic Treatment at Well Site 6	**Client:**	Las Quintas Serenas Water Company		

Page 3

Item No.	Item Description	Unit	Quantity	Unit Price	Amount	Remarks
1	Site Demolition and Removal of Abandoned Facilities at Well Sites	LS	1	$10,000	$10,000	Well No. 6. Assumes that existing hydro tank will be reused.
2	Site Piping Well Site No. 6	EA	1	$100,000	$100,000	Includes flow control valves and connections to treatment units
3	Concrete Slabs for Site Equipment	CY	40	$350	$14,000	Well Nos. 5 and 6
4	8-inch water main	LF	2,500	$45	$112,500	Well No. 7 to Well No. 6
5	400,000 gallon reservoir	LS	1	$325,000	$325,000	Well No. 6
6	850-gpm transfer booster station	LS	1	$120,000	$120,000	Well No. 6 (pre-packaged VFD pump station)
7	1,250 gpm Adsorption Arsenic Treatment System	LS	1	$500,000	$500,000	To treat Well Nos. 6 and 7 (Severn Trent)
8	200 gpm Adsorption Arsenic Treatment System	LS	1	$100,000	$100,000	To treat Well No. 5
9	Back-up Generator	LS	1	$80,000	$80,000	Well No. 6
10	Fencing and Site Work at Well Sites	EA	1	$40,000	$40,000	Well No. 6, includes grading for floodplain
11	Re-equip well	EA	2	$15,000	$30,000	Well Nos. 6 and 7, to remove bowls
12	Subtotal				$1,431,500	
13	25% Engineering and Contingencies				$357,875	
14	**TOTAL**				$1,789,375	

Recd from Steve 5-2-05

WestLand Resources, Inc.
Engineering and Environmental Consultants

OPINION OF PROBABLE CONSTRUCTION COST

Page 4

Project Name: Las Quintas Serenas Existing System Upgrades
Project No. 1148.01 A 8000
Location: Sahuarita, Arizona
Description: Individual Arsenic Treatment at Each Well

Prepared by: JL **Date:** 02/18/05
Checked by: KDF **Date:**
Client: Las Quintas Serenas Water Company

Item No.	Item Description	Unit	Quantity	Unit Price	Amount	Remarks
1	Site Demolition and Removal of Abandoned Facilities at Well Sites	EA	2	$7,000	$14,000	Well Nos. 6 and 7. Assumes that existing hydro tanks will be reused
2	Site Piping Well Site No. 6	EA	1	$80,000	$80,000	Includes flow control valves and connections to treatment units
3	Site Piping Well Site No. 7	EA	1	$50,000	$50,000	Includes flow control valves and connections to treatment units
4	Concrete Slabs for Site Equipment	CY	80	$350	$28,000	Well Nos. 5 and 6
5	150,000 gallon reservoir	LS	1	$140,000	$140,000	Well No. 7
6	100,000 gallon reservoir	LS	1	$95,000	$95,000	Well No. 6
7	850-gpm transfer booster station	LS	1	$120,000	$120,000	Well No. 7 (pre-packaged VFD pump station)
8	850-gpm Adsorption Arsenic Treatment System	LS	1	$425,000	$425,000	Well No. 7 (Severn Trent)
9	425-gpm transfer booster station	LS	1	$80,000	$80,000	Well No. 6 (pre-packaged VFD pump station)
10	425-gpm Adsorption Arsenic Treatment System	LS	1	$280,000	$280,000	Well No. 6 (Severn Trent)
11	Fencing and Site Work	EA	1	$15,000	$15,000	Well No. 6
12	Fencing and Site Work	EA	1	$10,000	$10,000	Well No. 7
13	Subtotal				$1,337,000	
14	25% Engineering and Contingencies				$334,250	
15	TOTAL				$1,671,250	

Rec'd from Steve 5-2-05

WestLand Resources, Inc.
Engineering and Environmental Consultants

OPINION OF PROBABLE CONSTRUCTION COST

Page 5

Project Name: Las Quintas Serenas Existing System Upgrades
Project No. 1148.01 A 8000
Location: Sahuarita, Arizona
Description: Individual Arsenic Treatment at Each Well

Prepared by: JL **Date:** 02/18/05
Checked by: KDF **Date:**
Client: Las Quintas Serenas Water Company

Item No.	Item Description		Amount	Remarks
1	Site Demolition and Removal of Abandoned Facilities at Well Sites	0	$14,000	Well Nos. 6 and 7. Assumes that existing hydro tanks will be reused
2	Site Piping Well Site No. 6	40 000	$80,000	Includes flow control valves and connections to treatment units
3	Site Piping Well Site No. 7	25 000	$50,000	Includes flow control valves and connections to treatment units
4	Concrete Slabs for Site Equipment	28 000	$28,000	Well Nos. 5 and 6
5	150,000 gallon reservoir	0	$140,000	Well No. 7
6	100,000 gallon reservoir	0	$95,000	Well No. 6
7	850-gpm transfer booster station	0	$120,000	Well No. 7 (pre-packaged VFD pump station)
8	850-gpm Adsorption Arsenic Treatment System	243 000	$425,000	Well No. 7 (Severn Trent)
9	425-gpm transfer booster station	0	$80,000	Well No. 6 (pre-packaged VFD pump station)
10	425-gpm Adsorption Arsenic Treatment System	188 000	$280,000	Well No. 6 (Severn Trent)
11	Fencing and Site Work	0	$15,000	Well No. 6
12	Fencing and Site Work	0	$10,000	Well No. 7
13	Subtotal	100 000	$1,337,000	
14	25% Engineering and Contingencies	624 000	$334,250	
15	TOTAL		$1,671,250	
	200 gpm Adsorb. Arsenic			

A new 3,000 gallon hydropneumatic tank will be required for Well No. 6 to provide surge protection for the arsenic treatment facilities as this well is not equipped with variable frequency drive.

Page 6

Table 5. Well 6 (400 gpm) Design Criteria

Pump Head at Treatment Plant Site (feet elevation)	2,903
Well Pad Elevation (feet elevation)	2,855
Static Water Level (feet bls)	337
Estimated Drawdown at 400 gpm (feet)	9
6-inch Column Friction Head Loss (460 feet bowl setting) (feet)	11
Manifold Losses (feet)	5
Sand Separator Losses (feet)	14
Total Dynamic Head (TDH, feet)	**424**

WELL NO. 5

Well No. 5 will not require any modifications, as it will continue to pump directly into the distribution system. The capacity of Well No. 5 will likely decrease to 200 gpm due to the headloss associated with the new treatment facility (approximately 5 psi during normal operation and an additional 10 psi during backwash). The pump curve for Well No. 5 is included in Appendix D. Additionally, Well No. 5 has shown signs of sanding and will require an external sand separator, which will create an 8 psi/18 feet headloss at 200 gpm per the manufacturer's specifications. Manufacturers cut sheets for the sand separator can be seen in Appendix E.

Table 6. Well 5 Design Criteria

	Existing (230 gpm)	Future (200 gpm)
Highwater Elevation (feet elevation)	3057	3057
Well Pad Elevation (feet elevation)	2910	2910
Static Water Level (feet bls)	401	401
Estimated Drawdown at 200 gpm (feet)	7	4
4-inch Column Friction Head Loss (460 feet bowl setting) (feet)	16	12
Manifold Losses (feet)	5	5
Sand Separator Losses (feet)	0	18
Arsenic Facilty Losses (feet)	0	23
Total Dynamic Head (TDH, feet)	**576**	**610**

Applicant's Exhibit A-13

Page 8 of Attachment of Managers Report of 12/29/05

Exhibit G-12

Interrupt Service (IS)

TRICO ELECTRIC COOPERATIVE (TRICO) interrupts usually do not occur during our water peak demand time as most people are indoors, working, or driving and not watering their yards during the extreme heat, and the commercial water haulers from the stand pipe have stopped for the day.

Currently TRICO's maximum interrupt has been 8 hours (which occurred this past summer). If the Natural Gas well is started when the tanks are full, then the tanks act as a shock absorber for the system, allowing the tanks to fill when the well pumps in excess of system demand and feeding into the system when the demand is higher than the well can produce.

About once a year, during an interrupt, the current storage contributes about 50,000 gallons into the system. Once we add the 345 obligated homes, and based on the current system's maximum pumping capabilities (refer to the pumping detail listed below), we will need about 100,000 gallons more storage to offset the demand *.

Community Water Company also has their wells on the TRICO IS program. They have decided to go with storage to supply their customers with water instead of an alternate energy supply for pumping water during interrupts. This does not give them water in the case of a sustained electrical power outage.

Interrupt Service (IS) Rates: We currently have our wells on Interruptible Service – two (2) of which are 6.17 cents per KW used and no demand charge if the wells are not run through the IS peak demand. (There is a verbal agreement* that we can run through the interrupts as many times a year as necessary so long as we pay the demand charge of $ 15.25 per KW. The # 5 well has a demand charge of about $549.00, the #6 well about $1,000.00, and the #7 well about $1,900.00 per monthly violation).

The normal pumping rate is General Service - 3 which is a demand charge of $15.25per KW per month and 5.85 cents per KW used. The cost of KW is $115.00 per month more for the IS-2 rate, and over GS-3 rate but does not have the demand charge of $ 3,500 dollars.

Our monthly average for electricity for the fiscal year ending 2003 was $2,302.00 dollars. **LQS is saving over $3,350.00 per month with the IS – 2 rate (over $40,200.00 per year).**