ORIGINAL

0000038314

RECEIVED

2006 JAN 17 P 2:20

AZ CORP COMMISSION
DOCUMENT CONTROL

SALLQUIST, DRUMMOND & O'CONNOR, P.C.
ATTORNEYS AT LAW
TEMPE OFFICE
4500 S. LAKESHORE DRIVE
SUITE 339
TEMPE, ARIZONA 85282

RICHARD L. SALLQUIST

PHONE (480) 839-5202
FACSIMILE (480) 345-0412
E-MAIL dick@sd-law.com

28DL

January 17, 2006

HAND DELIVERY
Linda Jaress, Executive Consultant
Arizona Corporation Commission
Utilities Division
1200 W. Washington
Phoenix, AZ 85007

Re: Utility Source, L.L.C. Application for a Certificate of Convenience and Necessity Extension; Docket No. WS-04235A-05-0707; Insufficiency Response

Dear Linda:

Please find attached to the Company's Responses to the deficiency items cited in your November 3, 2005 Insufficiency Letter.

WASTEWATER

Item 1. Please see the attached 208 Application submitted on December 28, 2005 which the Company's Engineer believes will be deemed "not inconsistent", meaning that a 208 Amendment will not be required.

Item 2. Please see the attached "Wastewater Treatment Plant Design Report and Submittal for Flagstaff Meadows Site 2 WWTP" dated December 13, 2005, prepared by Santec Corporation. Copies of the 31 page Report are provided to all recipients of this letter, with the voluminous drawings provided to only you.

Item 3. The APP filing was made on December 20, 2005 and is "in review". It was administratively complete on February 10, 2006, and is expected to be issued in the Third Quarter of 2006.

Item 4. Please see Response Item 2.

Item 5. Please see Response Item 2. The on-site plans are not complete at this time and will be prepared as part of the Line Extension Agreement between the Company and Developer(s).

Item 6. Parcels B and C are commercial parcels whose water will be supplied from the Owners on-site well.

Item 7. The Company presently has approximately 300 customers located in its existing CC&N area known as Flagstaff Meadows Units 1 and 2 and Flagstaff Town Homes.

WATER

Item 1. Please see the attached Physical Availability Demonstration Report from Hydro Systems, Inc, dated December 23, 2006. Copies of the Executive Summary are provided to all recipients of this letter, with the voluminous Report provided to only you.

Item 2. Please see Response Item 1.

Item 3. The Company will not need to expand its water system to serve the expansion area as indicated in the above Reports.

Item 4. Please see Response Item 3.

Item 5. The Company presently has approximately 300 customers located in its existing CC&N area known as Flagstaff Meadows Units 1 and 2 and Flagstaff Town Homes.

In the event you have any questions regarding these matters, please do not hesitate to call.

Sincerely,

Richard L. Sallquist

Enclosures

cc: Docket Control (15 copies w/o attachments)
Del Smith
Lyn Farmer
Brian Bozzo
Lonnie McCleve
John Aber, Coconino County Community Development

208 Consistency Review Form

ADEQ Arizona Department of Environmental Quality
Janet Napolitano, Governor
Stephen A. Owens, ADEQ Director

This facility review is based on information obtained from the applicant, permit writer, the associated Water Quality Management Plan (WQMP) and amendments, and other related documents as cited.

Permit Writer or Applicant – Please Complete Sections 1-14

Facility Information	Explanation (*Provide a brief description*)
1. Include the Facility name, name of Applicant & Permit Writer. & (**If Known,** *Please include permit number)*	Flagstaff Meadows Site #2 WWTP Utility Source LLC-owner Donald Bell –ADEQ APP Project Manager p-105714 (old site #1=P-104083)
2. Permit category - (a, b, or c) a. AZPDES *(describe discharge)* b. Individual APP *(describe facility)* c. General permit *(describe type)*	Individual APP
3. Facility location *(watershed, county, Lat/Long or Township, Range & Section)*	Lat: 35^0 14' 21" N Long: 111^0 49' 24" W NW of Exit 185 off Interstate 40 at Bellmont, Arizona 86015
4. Type of permit - (a, b, c, or d) a. New WWT facility b. AZPDES renewal c. Modification to an existing facility d. On-site subdivision	New WWTP-Individual to be operated separately but commingle flows with Flagstaff Meadows Site #1 WWTP for reuse (B+) and AZPDES (not to exceed 150,000 gpd).
5. Attach a descriptive map ***Include a, b, c ,& d*** a. Facility/site location b. Discharge location(s) c. Adjacent urban areas *(the nearest urban area may be miles away)* d. Nearest surface water(s)	Attached
6. Annual average daily flow *Note: If renewal with no changes in discharge location, technology, treatment and disposal methods, and capacity - STOP HERE*	Original application is 75,000 with second phased portion of 75,000gpd to total of 150,000.
7. Change in annual average daily flow – (a, or b)? a. No change b. Increase (explain)	New
8. Treatment method (explain)	Stantec Extended Aeration process.
9. Change in treatment method – (a, b, or c)? a. No change b. Improvement to technology c. Septics/alternative systems *(attach ADEQ Forms 113 and 115)*	No
10. Effluent disposal method(s) *If discharge is to a surface water or lake, provide name of surface water.*	To current reuse/reclaimed permit R104083 and to current AZPDES permit AZ0024708.
11. Change in effluent disposal method (a, b, c, or d)? a. No change b. Change in location (explain)	No change of location or method of the disposal portion.

c. Change in method (explain) d. Additional locations (explain)	

12. Sludge handling – *describe how sludge will be handled*	Sludge thickener with belt press, to be delivered to local authorized and approved landfill facility.
13. Entity type a. Municipality/public utility b. Private utility c. Semi public *(sanitary district)* d. Other *(individual homeowner or homeowners association)*	Private utility
14. Service area (if known) *Attach map & legal description* a. New service area for CC&N b. Expansion of existing service area c. Increase # of lots in subdivision d. Other	Unknown by ADEQ staff.

For ADEQ 208 Review Staff Only –

Facility Information	Explanation (Reference the page # and COG WQMP)
1. DPA	
2. Permit number	
3. Service area *Attach map & legal description* a. New service area for CC &N b. Expansion of existing service area c. Increase # of lots in subdivision	
4. Planning area *Attach map & legal description* a. New b. Expansion of planning area	
5. Designated Management Agency a. Facility is a DMA b. Distance to nearest DMA c. Ordinance requiring hookup	

Does the facility meet any of the following conditions?

Special Conditions	Explanation
6. Discharge to a unique water?	
7. Discharge to an impaired/not attaining water?	
8. Pollutant load allocations specified in a TMDL?	
9. Located in a nitrogen management area?	
10. Change in ownership?	

(Pima County only)	
11. Other *(compliance issues, site specific standards, etc.)*	

Based on Section 208 of the Federal Water Pollution Control Act, Arizona Administrative Code R18-9-108(B)(10), and/or the Certified Area WQMP, this application for permit is determined to be:

Determination By: **Date:**

Consistent	Not Inconsistent	Inconsistent	208 Coordinator	Unit Manager	Section Manager

If determination is "inconsistent," an amendment to the Water Quality Management (208) Plan must be processed and submitted for approval by ADEQ.

If determination is "Not inconsistent," this means the project was not identified in the current 208 Water Quality Management Plan, but is consistent with regional water quality management goals.

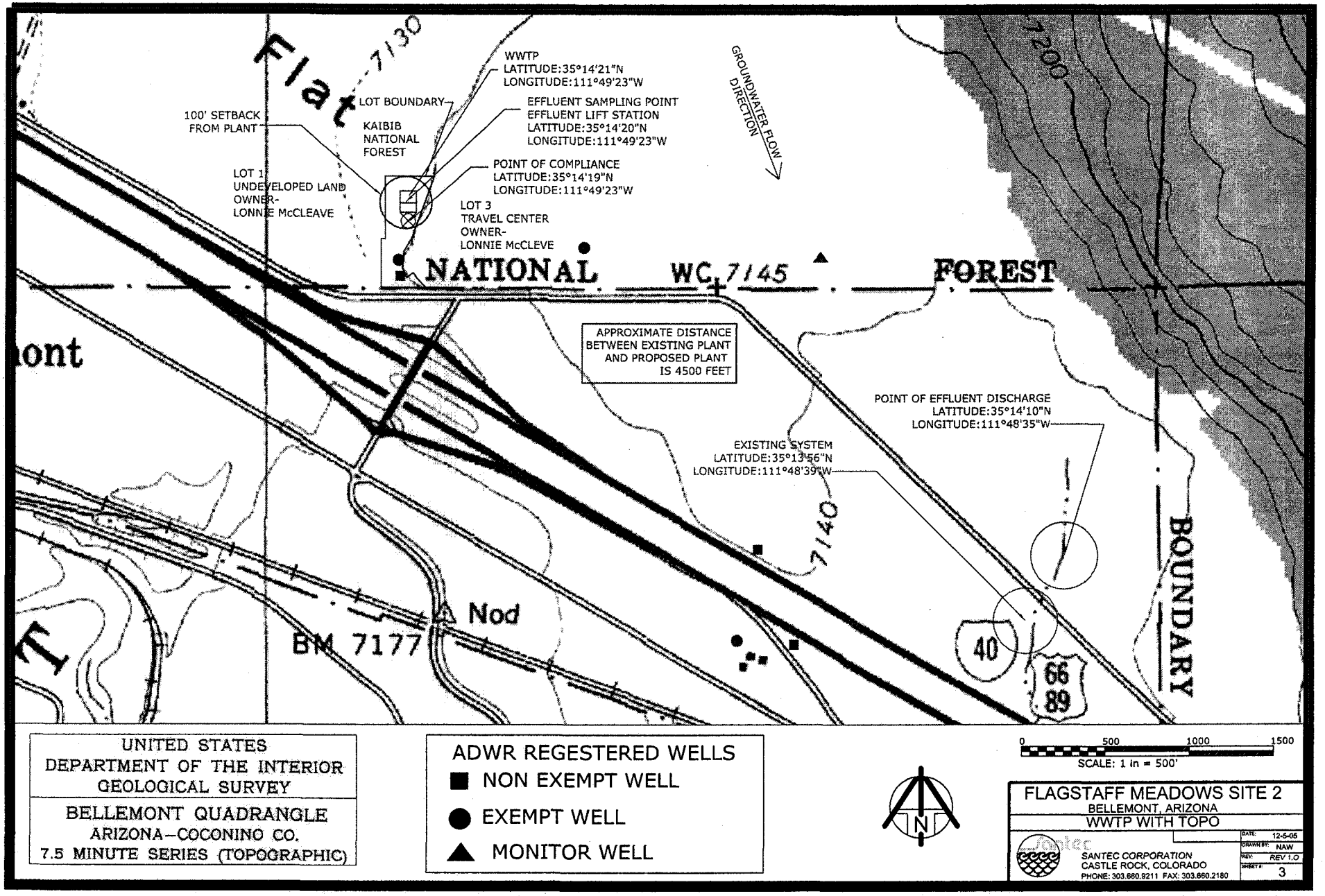

UNITED STATES
DEPARTMENT OF THE INTERIOR
GEOLOGICAL SURVEY

BELLEMONT QUADRANGLE
ARIZONA–COCONINO CO.
7.5 MINUTE SERIES (TOPOGRAPHIC)

ADWR REGESTERED WELLS
- NON EXEMPT WELL
- EXEMPT WELL
- MONITOR WELL

0 500 1000 1500
SCALE: 1 in = 500'

N

FLAGSTAFF MEADOWS SITE 2
BELLEMONT, ARIZONA
WWTP WITH TOPO

SANTEC CORPORATION
CASTLE ROCK, COLORADO
PHONE: 303.660.9211 FAX: 303.660.2180

DATE: 12-5-05
DRAWN BY: NAW
REV: REV 1.0
SHEET #: 3

WASTEWATER TREATMENT PLANT DESIGN REPORT AND SUBMITTAL

for

Flagstaff Meadows Site 2 WWTP

Bellemont, Arizona

Coconino County

Prepared for:

Utility Source L.L.C.
721 E. San Pedro
Gilbert, Arizona 85234

Prepared by:

Santec Corporation
220 Malibu Street
Castle Rock, Colorado 80109

TABLE OF CONTENTS SECTION 1

FLAGSTAFF MEADOWS SITE 2 WWTP

WASTEWATER TREATMENT PLANT DESIGN REPORT AND SUBMITTAL

1 ADMINISTRATIVE INFORMATION 1

1.1 GENERAL DESCRIPTION 1
1.2 PURPOSE OF DESIGN REPORT AND SUBMITTAL 1

2 WASTEWATER CHARACTERIZATION 2

2.1 WASTEWATER FLOW PROJECTIONS 2
2.1.1 DESIGN WASTEWATER TREATMENT PLANT FLOW 2
2.2 PHYSICAL, CHEMICAL AND BIOLOGICAL CHARCTERISTICS 2
2.3 SEASONALITY 3
2.3.1 VARIATIONS IN FLOW 3
2.3.2 TEMPERATURE VARIATIONS 3
2.4 DAILY FLOWS APPROACHING DESIGN FLOW 4
2.4.1 HYDRAULIC IMPACT 4
2.4.2 IMPACT OF FLOW ON TREATMENT PERFORMANCE 4
2.4.3 DESIGN FEATURES 4

3 BADCT DEMONSTRATION 5

3.1 TREATMENT PROCESS DESCRIPTION 5
3.2 FLOW EQUALIZATION 5
3.2.1 VARIATION IN FLOW 5
3.2.2 BASIN LOCATION 5
3.2.3 IN-LINE EQUALIZATION 5
3.2.4 BASIN VOLUME 6
3.2.5 BASIN CONSTUCTION 6
3.2.6 PUMPS AND CONTROLS 6
3.3 AERATION PROCESS 7
3.3.1 RETURN SLUDGE 7
3.3.2 BASIN CONFIGURATION 7
3.3.3 AERATION EQUIPMENT 8
3.3.4 WASTE SLUDGE DISPOSAL 9
3.3.5 SAMPLING AND MEASURING DEVICES 9
3.4 NITRIFICATION PROCESS SUMMARY 10
3.4.1 WORKING VOLUME 10
3.4.2 OXYGEN REQUIREMENTS 10
3.4.3 ALKALINITY REQUIREMENTS 10
3.4.4 ALKALINITY CONTROL and pH MEASURMENTS 10
3.5 DENITRIFICATION PROCESS SUMMARY 11
3.5.1 BASIN CONFIGURATION 11
3.5.2 RETURN SLUDGE AND WASTING 12
3.6 REAERATION PROCESS SUMMARY 12
3.6.1 BASIN CONFIGURATION 12
3.6.2 MIXED LIQUOR RETURN AND WASTING 13
3.7 SECONDARY CLARIFIER SUMMARY 13

3.8 DISINFECTION AND DECHLORINATION 14
3.8.1 DISINFECTION CHEMICAL FEED EQUIPMENT 14
3.8.2 CONTACT BASIN DESIGN 14
3.8.3 DECHLORINATION CHEMICAL FEED EQUIPMENT 14
3.9 CONTAINMENT STRUCTURES 15
4 CONSTRUCTION MANAGEMENT 15
4.1 INTRODUCTION: 15
4.2 PROJECT TEAM: 15
4.3 COMMUNICATION AND CORRESPONDANCE: 15
4.4 SPECIAL MEETINGS: 15
4.5 SUBMITTAL PROCEDURES: 15
4.6 QUALITY CONTROL 16
4.6.1 INSTALLATION QUALITY CONTROL 16
4.7 SAFETY PLAN: 16
4.8 CONFLICT RESOLUTION: 16
4.9 CONTRACTOR'S ON-SITE WORK: 16
4.10 CONSTRUCTION CHECK POINTS: 17
4.11 START-UP: 17
4.12 FINAL CLEANUP: 17
5 SYSTEM START-UP 18
5.1 PRE-OPERATIONAL TESTING 18
5.1.1 TREATMENT PLANT CONTAINMENT VESSELS 18
5.1.2 TREATMENT FACILITY PIPING 18
5.1.3 MECHANICAL EQUIPMENT 18
5.1.4 ELECTRICAL EQUIPMENT 18
5.2 FACILITY START-UP FOR BATCH OPERATION 18
5.3 FACILITY START-UP FOR CONTINUOUS OPERATION 19
5.4 EFFLUENT CHARACTERISTICS DURING START-UP 19
5.4.1 BOD_5 19
5.4.2 TSS 19
5.4.3 pH 19
5.4.4 FECAL COLIFORM 19
5.4.5 TOTAL NITROGEN 19
5.5 TIME FRAME FOR MEETING PERFORMANCE REQUIREMENTS 20
6 PLANNED, NORMAL OPERATION 21
6.1 FLOW EQUALIZATION 21
6.1.1 FLOW EQUALIZATION 21
6.2 AERATION 21
6.2.1 ANOXIC 21
6.2.2 AERATION 21
6.3 DENITRIFICATION 22
6.4 REAERATION 22
6.5 SECONDARY CLARIFIER 22
7 OPERATION AND MAINTENANCE MANUAL OUTLINE 23
8 METHOD OF DISPOSAL 25
8.1 EFFLUENT DISPOSAL 25
8.2 SLUDGE MANAGEMENT 25
9 CONTINGENCY AND EMERGENCY OPERATION 26
VIOLATION OF A PERMIT CONDITION (MECHANICAL) 26
9.1 COMMINUTOR 26
9.2 PUMPING SYSTEMS 26

9.3 CONTROL SYSTEMS 26
9.4 FLOW METERING 26
9.5 MONITORING EQUIPMENT 27
VIOLATION OF A PERMIT CONDITION (GROUND WATER QUALITY) 28
VIOLATION OF DISCHARGE LIMITATION 28
IMMINENT AND SUBSTANTIAL DANGER TO PUBLIC HEALTH 29
24-HOUR EMERGENCY RESPONSE MEASURES 29
EMERGENCY RESPONSE COORDINATOR 29
10 CLOSURE PLAN 30
10.1 MATERIALS TO BE REMOVED FROM SITE 30
10.1.1 PROCESS WATER, MIXED LIQUOR, WASTE SLUDGE 30
10.1.2 TANKS VESSELS AND MECHANICAL EQUIPMENT 30
10.2 POST CLOSURE MONITORING 30
11 COST ESTIMATES 31

1 ADMINISTRATIVE INFORMATION

1.1 GENERAL DESCRIPTION

The proposed Flagstaff Meadows Site 2 wastewater treatment plant will serve both the new proposed Cabins at the Peaks sub-division located about a mile west of the site and some flow from a travel center located in the lot adjacent to the site. This plant will be located directly north of the Bellemont exit on I-40 and will be build in two phases to accommodate the increased flow as the Cabins at the Peaks sub-division is built. Both phases will treat 75,000 gpd each for a total of 150,000 gpd at full buildout. This sub-division is composed of 283 residential lots. The Santec wastewater treatment plant that will treat the domestic wastewater from the development and travel center is described in this document.

1.2 PURPOSE OF DESIGN REPORT AND SUBMITTAL

The purpose of the Design Report and Submittal is to provide the administrative information, facility design details and construction details in support of the Significant Amendment to Aquifer Protection Permit filed on behalf of Utility Source L.L.C. *This design report contains the details required by section R18-9-B202 of the Arizona Administrative Code.*

This Design Report and Submittal is to provide the design details of the proposed wastewater treatment facility from the outlet of the collection system at the wastewater treatment facility to the final treatment unit prior to effluent disposal.

2 WASTEWATER CHARACTERIZATION

2.1 WASTEWATER FLOW PROJECTIONS

2.1.1 DESIGN WASTEWATER TREATMENT PLANT FLOW

Each proposed phase of the WWTP will have an average flow design capacity of 75,000 gpd. This 75,000 gpd capacity will serve a population of at least 750 persons; calculating sewage flow at 100 gpd/capita per the ADEQ Engineering Bulletin No. 11. Because dwellings are often used as seasonal homes in the area, flows approaching the rated WWTP capacity are not anticipated; however, peak flows may be experienced on weekends and holidays. Included in the dwelling unit numbers is a calculated quantity of flow that will be generated from the travel center.

Table 2.1 WASTEWATER FLOWS

Contributing Development	Dwelling Units	Projected Unit Flow (gpd/ unit)	Nominal Plant Capacity (gpd)
Flagstaff Meadows Site 2 WWTP phase 1	**428**	**175**	**75,000**
Flagstaff Meadows Site 2 WWTP phase 2	**428**	**175**	**75,000**

2.2 PHYSICAL, CHEMICAL AND BIOLOGICAL CHARCTERISTICS

The wastewater treatment facility has been designed assuming medium-strong strength wastewater as shown in Table 2.2 from *Wastewater Engineering Treatment, Disposal and Reuse* (Metcalf and Eddy, Fourth Edition, page 186, Table 3-16).

The projected organic loading of 200 mg/l BOD_5 and 220 mg/l TSS is in conformance with the recommendation in Figure VI-2 on Page VI-6 of *Minimum Requirements for Design, Submission of Plans and Specifications of Sewage Works, Engineering Bulletin No. 11*, Arizona Department of Environmental Quality, July 1978.

Table 2.2 TYPICAL COMPOSITION OF DOMESTIC WASTEWATER
(All values except settable solids are expressed in mg/L)

CONSTITUENT	CONCENTRATION		
	Strong	Medium	Low
Solids, total	1,230	720	390
Dissolved, total	860	500	270
Fixed	520	300	160
Volatile	340	200	110
Suspended, total	400	210	120
Fixed	85	50	25
Volatile	315	160	95
Settleable solids, ml/L	20	10	5
Biochemical oxygen demand (20° C)	350	190	110
Total organic carbon (TOC)	260	140	80
Chemical oxygen demand (COD)	800	430	250
Nitrogen (total as N):	70	40	20
Organic	25	15	8
Nitrites	0	0	0
Nitrates	0	0	0
Phosphorous (total as P):	12	7	4
Organic	4	2	1
Inorganic	8	5	3
Chlorides	90	50	30
Alkalinity (as $CaCO_3$)		60-120	
Grease	100	90	50

Table contents from *Wastewater Engineering Treatment, Disposal and Reuse*, Metcalf and Eddy, Inc. Fourth Edition Table 3-15, 3-16.

2.3 SEASONALITY

2.3.1 VARIATIONS IN FLOW

Since the Flagstaff Meadows Site 2 WWTP will serve a proposed, new development, no data on existing flow variations is available.

The Santec WWTP design incorporates features that enable the facility to be operated flexibly and to effectively treat flow variations. The Santec WWTP is designed to treat average daily flows from 25% to 100% of the design flow. Detailed information regarding WWTP operation, including average daily flows below 25% of design, can be found in the start-up procedure.

2.3.2 TEMPERATURE VARIATIONS

A specific feature of the Santec design that results in consistent, high-quality sewage treatment is the use of horizontal cylindrical tanks that are installed completely below grade. The below grade, totally enclosed tanks retain the heat generated by the oxidation process and process air blowers for more rapid waste stabilization. The earth-insulated tank provides maximum protection from temperature variations in the surrounding air and establishes consistent microbe growth and wastewater stabilization. Effective treatment to the performance level specified can be maintained with mixed liquor temperatures in the range of 10 °C to 35 °C. This range is based on operational observation and data from Santec Corporation WWTP's located throughout the U.S.

2.4 DAILY FLOWS APPROACHING DESIGN FLOW

2.4.1 HYDRAULIC IMPACT

The Flagstaff Meadows Site 2 WWTP average design flow of 75,000 gpd was developed Paragraph 2.1.2. Treatment facility force mains, gravity piping, recycle piping and aeration systems have each been sized based on this design flow.

The proposed wastewater treatment plant incorporates flow equalization to dampen peak flows received by the wastewater treatment facility. During normal operation, peak flow to the aeration tank and other downstream treatment units is limited to 125% of the design flow. Process flow is controlled through selection of the design pumping rate, use of control valves and by use of variable speed drives. Any of these methods may be used ton control the flow rate through the process. A detailed summary of flow equalization unit operation can be found in Section 6.

2.4.2 IMPACT OF FLOW ON TREATMENT PERFORMANCE

The Santec WWTP will operate within compliance for all levels of flow up to the design capacity. Operating the Santec WWTP in accordance with the normal operating procedure will produce an effluent that meets the permitted discharge standards.

Operational experience with Santec Corporation treatment systems shows that heavy loading provides the operator with the maximum operational flexibility to maintain the design food to micro-organism (F: M) ratio in the aeration tanks.

2.4.3 DESIGN FEATURES

The proposed wastewater treatment plant for The Flagstaff Meadows Site 2 facility incorporates several design features to accommodate increasing and fluctuating wastewater flow rates:

Flow Equalization Tank - The equalization tank is provided to dampen peak flows to and throughout the facility.

Aeration Load Variation - Flexible process design and operating procedure controls the F:M ratio for flows between 25% and 125% of design rating by introducing raw sewage at one of several points in the aeration tank(s). This feature allows the operator to balance the oxygen demand in the aeration portion of the treatment process.

Aeration Detention Time - Sludge Recycle and Mixed Liquor return rates are variable and operated to optimize waste stabilization with variable detention times in treatment units.

Air Delivery System - A variable frequency drive on the blower motor control panel enables optimization of the oxygen supply to meet the microbe oxygen demand at various flow rates.

3 BADCT DEMONSTRATION

3.1 TREATMENT PROCESS DESCRIPTION

The Santec treatment plant design for the Flagstaff Meadows Site 2 WWTP is an extended aeration process which employs a single-stage system for combined carbon oxidation-nitrification and a modified denitrification sewage treatment processes[1]. The plant design utilizes multiple basins, as shown in Figure 1, to create sequential environments that promote the desired biological reactions within the treatment process.

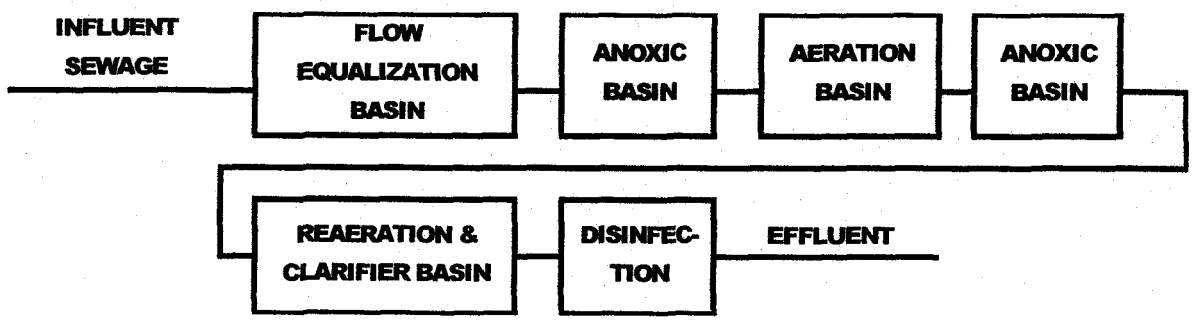

Figure 1. Sewage Treatment Process Flow Diagram.

3.2 FLOW EQUALIZATION

3.2.1 VARIATION IN FLOW

The flow equalization design incorporates automated flow control via variable pump speeds designed to provide continuous flow to the treatment process throughout the flow variability spectrum. During periods of low flow, the controls set a minimum flow to the treatment process (typically 25% of the design average flow), as the equalization basin fills, the speeds progressively increase to the maximum position. The maximum position is set to provide 125% of the design average flow to the treatment process units.

Estimates on peak flow are obtained from the 10-State Standards, "Recommended Standards for Wastewater Facilities" (Health Education Services, 1997 Edition). Detailed calculations for equalization basin design can be found in Section 2.

3.2.2 BASIN LOCATION

The flow equalization basin for the Flagstaff Meadows Site 2 facility receives the entire raw waste stream from the collection system. Headworks items such as comminution and bar screen are located ahead of the flow equalization basin for pump protection. All subsequent process units are located down stream of the flow equalization basin.

3.2.3 IN-LINE EQUALIZATION

The design of the flow equalization basin is for an in-line equalization unit. Due to the estimated variations in the influent flow rate, and in-line unit will provide better flow distribution over a 24-hour period than a side-line equalization unit.

---

[1] Denitrification process designation from "Process Design Manual for Nitrogen Control", U.S. EPA Technology Transfer, October 1975, Figure 5-1, pg. 5-2.

3.2.4 BASIN VOLUME

The required volume of the flow equalization basin is the peak hourly flow rate for a period of two hours minus the average pumping rate out of the basin. Detailed calculations for the basin volume can be found in Section 2.

3.2.5 BASIN CONSTUCTION

The flow equalization basin volume shall be provided in one vessel. The vessel shall be constructed as a prefabricated, cylindrical fiberglass tank, built to the standards set forth in the tank specifications.

3.2.5.1 BASIN ACCESS

Three-foot diameter access openings with four-foot diameter risers are provided for tank access, sampling and aeration piping. All internal mechanical equipment and diffusers shall be removable from the ground surface without entry into the vessel.

3.2.5.2 BASIN MIXING

The cylindrical design shall provide a smooth transitions from wall to floor to prevent the formation of "dead-zones" where little mixing occurs and prevent solids accumulation.

3.2.5.3 EMERGENCY OVERFLOW TO AERATION UNIT

A high-level, emergency, gravity overflow shall be installed to the aeration portion of the treatment process.

3.2.5.4 AIR AND MIXING

The flow equalization basin shall be capable of being mixed and aerated with course bubble diffusers to maintain aerobic conditions and prevent deposition of solids on the vessel floor. Aeration in the vessel will be controlled by a control valve located inside the access manway within easy reach of the operator to adjust aeration levels in the vessel. Diffusers shall be of coarse bubble design and provide a minimum rate of 20 cfm per 1,000 gallons of basin volume.

3.2.6 PUMPS AND CONTROLS

3.2.6.1 PUMPS

The duplex pumps will alternate duty as the lead pump and the lag pump in each sequential pumping cycle. For extended periods of operation, the lead and lag designation will alternate at 180-minute intervals.

The discharge line from each pump shall be connected in sequence to 1) a check valve, 2) a gate valve, and 3) a single pump discharge pipeline (force main) shared by both pumps. The pump discharge pipeline is routed to the influent anoxic and aeration tanks.

A magnetic flow meter displaying both gallons per minute and totalized flow is located on the pump discharge pipeline to monitor and control the flow to the treatment process.

3.2.6.2 PUMP CONTROLS

A switch for pump ON/AUTOMATIC/OFF operation shall be provided. Pump ON/OFF operation in the automatic mode shall be provided by a combination unit consisting of an ultra-sonic level transmitter and a pump control unit. Pump operation in the flow equalization basin feeds the treatment process.

The ultra-sonic level transmitter shall provide a signal for all levels of wastewater in the flow equalization basin. The pump control unit shall have a minimum of four (4) level controlled, adjustable relays. Relays shall be adjusted to the ultra-sonic level transmitter output signal to control the following functions:

1. Low Level Alarm ON

2. Lead Pump OFF level
3. Lead Pump ON level
4. Lag Pump OFF level
5. Lag Pump ON level
6. High Level Alarm ON

An alternator relay shall be provided in the control panel to alternate the operation of the pumps with each automatic ON signal and with each 180 minute ON cycle. Pump relays shall be capable of forced alternation at an adjustable time interval.

3.3 AERATION PROCESS

Detailed calculations for the aeration process design can be found in Section 2. Design values and their reference standards are given in Table 3.1.

Table 3.1 AERATION PROCESS DESIGN PARAMETER SUMMARY

PARAMETER	DESIGN VALUE	BULLETIN 11 STANDARD
AERATION PERIOD (hrs)	17.3	24.0
% RECYCLE	0%-150%	75%-150%
LBS BOD_5 / 1000 CF (ft^3)	18.9	10-20
LBS BOD_5 / LB MLSS (F/M)	0.099	0.05-0.15
LBS O_2 / LB BOD_5 REMOVED	3.3	NONE
FT^3 0_2 / LB BOD_5 REMOVED	2,100	2,100
MLSS (mg/l)	4000	2000-4000
SLUDGE AGE (days)	40	10 or more
LBS SOLIDS/ LB BOD_5 REMOVED	11.6	NONE

3.3.1 RETURN SLUDGE

The design of the Flagstaff Meadows Site 2 facility provides three pumping systems for the recycle of sludge to the process. The Return Activated Sludge (RAS) line is pumped from the secondary clarifier to multiple points in the treatment process. Flow metering is accomplished via regulation of the air flow to the airlifts. The Reaeration Mixed Liquor Return (MLR) recycle pipeline is pumped by multiple 3-inch PVC airlifts. The Nitrified Mixed Liquor Return (NMLR) line from the end of aeration to the influent anoxic tank is pumped by a single 3-inch PVC airlift. A control valve and rotameter in the Air Control Panel is available to adjust and monitor the airflow driving each airlift pump system. The airflow rate controls the sludge recycle flow rate in each recycle line.

Airlift calculations from "Centrifugal Compressor Engineering", (Hoffman Air & Filtration Division, December 1973, figure 11-6, page 257), show each 3-inch airlift capable of providing a minimum of 45 gpm of recycle flow at submergence above 40%.

The MLR airlift pumps are located in the reaeration tank. A single airflow control valve (throttling valve) is located on the MLR airline feeding the Air Control Panel. The recycled MLR flow passes to the anoxic denitrification tank.

The RAS airlift pumps are located in the clarifier. A single airflow control valve (throttling valve) is located on the RAS airline feeding the Air Control Panel. The recycled RAS flow passes to either the aeration tank or the sludge holding tank as controlled by slide gate valves for on/off control at the end of each discharge pipe.

3.3.2 BASIN CONFIGURATION

The Santec aeration tank is provided in a horizontal, cylindrical, fiberglass tank constructed to the standards set forth in the tank specifications. The cylindrical design of the vessel provides smooth

transitions from wall to floor, maintains good mixing throughout the tank, prevents solids deposition in the basin, and prevents the formation of "dead-zones" where little mixing occurs.

3.3.2.1 BASIN ACCESS

Three-foot diameter access openings with four-foot diameter risers are provided for tank access, sampling and aeration piping. All internal equipment and diffusers shall be removable from the ground surface without entry into the vessel.

3.3.2.2 DIFFUSED AERATION

Use of horizontal, cylindrical, fiberglass tanks with low length to width ratios is well documented in Arizona where Santec Corporation has installed approximately 50 similar facilities.

Design liquid depth in the aeration basin is 10 feet and 10 inches. A variation in liquid depth of 2 inches is designed due to the configuration of the inlets and outlets.

The tank design length to width ratio is 2.83:1 with a width to depth ratio of 1.1:1.0.

The diffusers in the aeration basin are positioned off the tank centerline to promote circular mixing around the circumference of the tank. The air uplift from the offset position induces a spiral roll in the mixed liquor. The spiral roll approximates plug flow through the tank, prevents short circuiting and provides excellent mixing.

3.3.2.3 INLETS AND OUTLETS

Sewage is pumped to the aeration tank(s) from the flow equalization tank or by gravity overflow from the anoxic tank. The multiple liquid flow inlets in the aeration tank(s) are equipped with multiple slide gate valves. These valves control fluid movement to various portions of the aeration tank.

The outlet from the aeration tank(s) is through a gravity overflow pipe to the denitrification chamber. This overflow pipe maintains a constant level in the aeration basin(s). The outlet from the denitrification tank passes flow to the reaeration tank.

Recycled mixed liquor return (MLR) flow from the reaeration tank passes to the anoxic denitrification tank following aeration

Return Activated Sludge (RAS) flow from the clarifier passes to either the influent anoxic tank, aeration tank or to the sludge holding tank as controlled by slide gate valves for on/off control at the end of each discharge pipe.

The design of the aeration tank incorporates a minimum 14-inch freeboard to the invert of the outlet overflow pipe. Additional freeboard shall be provided by the access manway risers at a minimum of 1-foot 6-inches. The total freeboard of the aeration tank shall be a minimum of 2-foot 6-inches.

3.3.3 AERATION EQUIPMENT

Aeration in the aeration tank shall be by fine bubble diffusers located along the length of the tank. Aeration shall be provided at a minimum of 20 SCFM per 1000 ft^3 of tank volume.

The air diffuser system piping system shall include gate valves for throttling airflow to each aeration header.

A pressure relief valve and pressure gauge port shall be installed on the main trunk line to the treatment plant.

Duplex, positive displacement blowers shall be used to provide an air supply. Duplex blower units shall be installed with chamber absorption silencers and intake filters capable of 98% efficiency on 10 micron particles. One, duplex (2 blowers total) blower systems shall be installed.

Configuration of blower controls shall provide for automatic alternation.

Blower capacity shall account for intake temperatures in excess of 120° F and compensated for pressure changes due to altitude.

Air supply shall be variable through use of a variable frequency drive (VFD) on blower motors. The VFD unit shall be equipped with a three-position switch for selecting a motor speed and easy adjustment of air supply volume.

3.3.4 WASTE SLUDGE DISPOSAL

The sludge holding tank shall provide a storage volume at a minimum of 20% of the design average daily flow.

Diffused aeration utilizing coarse diffusers shall be provided in the sludge holding tank at a minimum of 10 SCFM per 1000 ft^3.

Airlift type pump shall be provided for supernatant withdrawal. The supernatant intake level shall be adjustable. Supernatant shall be discharged into the aeration tank.

Waste sludge will be removed from the treatment plant in accordance with Section 8.

3.3.5 SAMPLING AND MEASURING DEVICES

3.3.5.1 SAMPLING LOCATIONS

Sampling of the aeration unit may be conducted at all access manways to the aeration basin. Sampling can also be accomplished from access manways in the denitrification and reaeration tanks.

All recycle streams, force main lines and waste sludge lines enter the manways at a minimum level of 12 inches above the liquid surface to provide for easy access and sampling.

3.3.5.2 FLOW MEASUREMENT

Flow measurement shall be provided at the following locations:

3.3.5.2.1 INFLUENT FLOW RATE

A magnetic flow meter shall be installed on the force main feed line between the flow equalization unit and the aeration basins. The meter shall be capable of recording totalized flow and display totalized flow and instantaneous flow rate.

3.3.5.2.2 RECYCLE AND WASTE SLUDGE LINES

Individual, area rotameters measuring the airflow shall be installed on all air lift air supply lines for measurement of recycle flow rates.

Waste sludge is removed from the treatment process on a batch basis. Waste sludge flow is equivalent to the recycle flow rate times the amount of wasting time.

Detailed instructions for waste flow measurement can be found in the normal operating procedures.

3.4 NITRIFICATION PROCESS SUMMARY

The Santec design incorporates a single-stage, suspended growth, combined carbon oxidation-nitrification process[2] for the conversion of ammonia-nitrogen to nitrate-nitrogen. The design of a single-stage, suspended growth, combined carbon oxidation nitrification process is well documented in "Process Design Manual for Nitrogen Control" and "Wastewater Engineering Treatment, Disposal and Reuse". Detailed calculations for nitrification design can be found in Section 2.

3.4.1 WORKING VOLUME

Design of the nitrification system considers that 75% of the aeration working volume is available for nitrification.

3.4.2 OXYGEN REQUIREMENTS

The process design shall provide a minimum of 4.6 lbs of O_2 per lb of ammonia-nitrogen. A minimum dissolved oxygen concentration of 2.0 mg/l shall be maintained in the aeration tank.

3.4.3 ALKALINITY REQUIREMENTS

Alkalinity is important in microbe processes because it is a measure of the buffering capacity of the water. Natural waters have three classes of materials associated with high pH levels 1) hydroxide, 2) carbonates, and 3) bicarbonates. Below pH 8.3 all alkalinity is bicarbonate alkalinity. Below pH 4.5 all bicarbonate has been converted to carbonic acid H_2CO_3 (Sawyer & McCarty 1967. *Chemistry for Sanitary Engineers*, Page 329).

Every mg/L of NH_4-N oxidized causes the destruction of 7.14 mg/L of Alkalinity expressed as $CaCO_3$ (Metcalf & Eddy 3rd Edition 1991. *Wastewater Engineering*, Page 698). As *Nitrosomonas* bacteria oxidize ammonia to nitrite large quantities of alkalinity are converted to cellular carbon and carbonic acid. *Nitrobacter* bacteria use more alkalinity to oxidize nitrites to nitrates (Ibid., Page 431). Thus, for example, the oxidation of 40 mg/L of NH_4-N to 10 mg/L means that (30 mg/L x 7.14) 214.2 mg/L of alkalinity will be consumed. As the alkalinity in the aeration tank is consumed, the pH will drop and can approach pH 4.5. Nitrification bacteria are sensitive organisms and have a narrow optimal growth range between pH 7.5 and 8.6; however some acclimation to lower pH conditions can occur. Because pH is a log scale, a pH below 6.5 means that only $1/10^{th}$ of the alkalinity is available as at pH 7.5, thus almost no buffering capacity remains. As the pH drops the microbe growth environment and nitrifying capacity becomes limited, then constrained and finally nonfunctional. Lime addition to bring pH levels above pH 7.5 may be required to maintain robust denitrification.

3.4.4 ALKALINITY CONTROL and pH MEASURMENTS

Alkalinity will be measured and monitored with an alkalinity test kit and alkalinity trends will be more frequently monitored with pH meter measurements. Alkalinity at levels of greater than 50 mg/L is normally required and the degree of nitrate formation will be a guide. Monitoring alkalinity in aeration tanks and in the sludge digester provides important plant operation guidance, particularly when the discharge permit requires nitrogen removal. The ease with which pH measurements can be made suggests that they need to be made frequently throughout the process to monitor process alkalinity. Frequent alkalinity testing will be needed to check the correlation of alkalinity with the pH measurements. Alkalinity measurements will be best made in samples of the clear liquid above settled sludge.

Lime as needed for nitrification will be added to the aeration tank and the sludge digester to bring pH levels above 7.5 to provide for enable robust denitrification. Lime addition is easiest made by making a lime slurry then pouring it into the tank. **Personnel Safety Caution**; the maximum lime slurry mixing ratio is: No more than 1.0 pound of Lime is to be added for each 2.5 gallons of water!

---

[2] Nitrification process designation from "Process Design Manual for Nitrogen Control", U.S. EPA Technology Transfer, October 1975, pg. 4-1.

3.5 DENITRIFICATION PROCESS SUMMARY

The Santec denitrification process uses a modified denitrification system that uses methanol as the carbon source for nitrate reduction. Table 3.2 lists the design parameters. Detailed calculations for denitrification process design can be found in Section 2. The denitrification process includes an anoxic zone prior to aeration for additional removal of nitrate. The design of system utilizes the denitrification tank following aeration as the principal nitrogen removal zone with a safety factor of 2.0 on this zone. The primary purpose of the influent anoxic zone is the reduction in operating cost associated with the addition of methanol in the denitrification zone following aeration. The configuration is identical to the denitrification tank following aeration.

Table 3.2 DENITRIFICATION PROCESS DESIGN PARAMETER SUMMARY

PARAMETER	DESIGN VALUE	BULLETIN 11 STANDARD
ANOXIC DETENTION PERIOD (hrs)	3.7	NONE
DENITRIFICATION DETENTION PERIOD (hrs)	3.7	NONE
MLVSS	3000	1000-3000
LBS NO_3-N / 1000 CF (ft^3)	15.84/10.20	200
pH	7.2	6.5-7.5
METHANOL/ NO_3-N RATIO	3.0	3-4

3.5.1 BASIN CONFIGURATION

The Santec denitrification tank is provided in a horizontal, cylindrical, fiberglass tank constructed to the standards set forth in the tank specifications. The cylindrical design of the vessel provides smooth transitions from wall to floor, maintains good mixing throughout the tank, prevents solids deposition in the basin, and prevents the formation of "dead-zones" where little mixing occurs.

3.5.1.1 MIXING

Design liquid depth in the denitrification basin is 10'-10".

Airlift type mixers shall be installed to minimize short-circuiting and promote mixed liquor contact with the carbon source.

The configuration of the mixer (s) in the denitrification basin (oriented to tank wall) promotes circular mixing (around the circumference of the tank). The resulting spiral roll of the mixed liquor approximates plug flow through the tank, prevents short circuiting and provides excellent mixing.

Use of horizontal, cylindrical, fiberglass tanks with low length to width ratios is well documented in Arizona where Santec Corporation has installed approximately 50 similar facilities.

3.5.1.2 INLETS AND OUTLETS

The inlet to the denitrification zone shall be through the crossover stub located in the FRP tank baffle.

The outlet from the denitrification zone is through a gravity overflow pipe. This overflow pipe maintains a constant level in the zone.

The design of the denitrification zone incorporates a minimum 16-inch freeboard to the invert of the outlet overflow pipe. Additional freeboard shall be provided by the access manways at a

minimum of 1 foot 6 inches. The total freeboard of the denitrification zone shall be a minimum of 2 feet 6 inches.

3.5.2 RETURN SLUDGE AND WASTING

The design of the Flagstaff Meadows Site 2 facility shall include two mixed liquor return lines. The MLR passes mixed liquor from the reaeration tank to the denitrification zone following aeration and the NMLR in the final aeration section passes mixed liquor to the anoxic basin at the head of the process..

The mixed liquor return line (MLR) shall be fed by 3-inch airlifts and equipped with a slide gate valve at the pipe exit point in the denitrification zone for recycle on/fraction/off control.

Airlift calculations from "Centrifugal Compressor Engineering", (Hoffman Air & Filtration Division, December 1973, figure 11-6, page 257), show each 3" airlift capable of providing a minimum of 45 gpm of recycle flow at submergence above 40%.

A control valve in the Airlift control panel controls the mixed liquor recycle line.

3.6 REAERATION PROCESS SUMMARY

The process design incorporates a reaeration zone immediately following the denitrification zone. The design of the reaeration zone incorporates vigorous counter-current diffused air mixing to promote the release of nitrogen gas prior to secondary clarification. Complete design calculations for the reaeration zone can be found in Section 3.

3.6.1 BASIN CONFIGURATION

The reaeration volume shall be provided in a horizontal, cylindrical, fiberglass tank constructed to the standards set forth in the tank specifications. The cylindrical design of the vessel provides smooth transitions from wall to floor to prevent the formation of "dead-zones" where little mixing occurs and prevents solids deposition in the basin.

The reaeration zone occupies the influent half of the tank in which the denitrification zone is constructed. Separation between reaeration and denitrification zone shall be maintained by Fiberglass Reinforce Plastic (FRP) baffles.

3.6.1.1 MIXING

Design liquid depth of mixed liquor in the reaeration zone is 10 feet and 0 inches.

Coarse bubble diffusers shall be utilized in the reaeration basin for mixing and degassing dissolved nitrogen from the mixed liquor passing from denitrification tank.

A minimum of 1 diffuser per 2.5 feet of tank length shall be installed. Each diffuser header shall contain a flow control valve for regulating the air supply to the diffusers.

3.6.1.2 INLETS AND OUTLETS

Reareation Inlet - The inlet to the reaeration zone shall be through the gravity overflow pipe from the denitrification zone.

Reareation Outlet - The reaeration zone outlet shall be underflow to the secondary clarifier which operates in an up flow mode.

The design of the reaeration zone incorporates a minimum 14-inch freeboard from the invert of the gravity outlet pipe to the top of the tank. Additional freeboard shall be provided by the access manways at a minimum of 1 foot 6 inches. The total freeboard of the reaeration zone shall be a minimum of 2 feet 6 inches.

3.6.2 MIXED LIQUOR RETURN AND WASTING

The design of the Flagstaff Meadows Site 2 facility shall include one mixed liquor return line outlet to the denitrification basin.
Each access manway of the reaeration zone shall contain one 3-inch airlift pump designated as a mixed liquor airlift pump.

3.7 SECONDARY CLARIFIER SUMMARY

The process design incorporates secondary clarification following the reaeration zone. Design parameters are listed in Table 3.3 and complete design calculations for the secondary clarifier can be found in Section 2.

Table 3.3 SECONDARY CLARIFIER DESIGN PARAMTER SUMMARY

PARAMETER	DESIGN VALUE	BULLETIN 11 STANDARD
DETENTION PERIOD (hours)	3.2	4.0
WEIR LOADING RATE (gpd/linear ft)	2,239	3,750
SURFACE LOADING RATE (gpd/ft^2)	476	493

The secondary clarifier shall be provided in a horizontal, cylindrical, fiberglass tank constructed to the standards set forth in the tank specifications. The cylindrical design of the vessel provides smooth transitions from wall to floor to prevent the formation of "dead-zones" where solids can accumulate in the basin.

The secondary clarifier occupies the outlet half of the tank in which the secondary clarifier is constructed. A longitudinal Fiberglass Reinforce Plastic (FRP) baffle shall maintain separation between reaeration and secondary clarification.

3.7.1.1 INLET STRUCTURE

The inlet to the secondary clarifier shall be underflow from the reaeration zone.

The complete mix design of the reaeration zone distributes solids uniformly along the length of the basin. The design of the underflow from the reaeration zone provides the entire length of the basin for inlet to the secondary clarifier minimizing inlet turbulence.

3.7.1.2 WIDTH TO LENGTH

The widths of the clarifier are the distances that define the water surface area in the clarifier. These are the longitudinal length of the tank, and the distance at the water surface level from the clarifier baffle to the tank wall.

The length of the clarifier is the distance the flow travels through it. Since flow occurs near the tank wall in a direction around the circumference of the tank, the length of the clarifier is approximately equal to ½ the circumference of the tank. This makes the clarifier much wider than long. Minimizing the clarifier length simplifies sludge collection by centralizing it in small zones across the width of the unit.

3.7.1.3 WEIR AND SCUM BAFFLES

The overflow weir in the secondary clarifier shall be of adjustable, V-notch design. The design of the weir shall incorporate a 12-inch scum baffle to minimize solids carry over in the effluent.

3.7.1.4 SLUDGE REMOVAL

The bottom of the clarifier is configured in a V-shape that extends the full width of the clarifier. Settling solids are carried to the center of the V-shape by gravity and by the continuous exit recycle flow of the airlift pump.

Multiple airlifts, designated return sludge airlift pumps, are placed in each access manway across the full width of the unit. Using multiple airlifts increases the efficiency of solids collection and removal.

3.7.1.5 SKIMMING REQUIREMENTS AND CONTROLS

The design of the facility shall include one skimmer waste line to the sludge holding tank.

Each access manway of the secondary clarifier shall contain one 3-inch airlift designated as a skimmer airlift. Each skimmer airlift will contain an individual airlift control valve for control of the skimming rate.

3.8 DISINFECTION AND DECHLORINATION

The design of the facility shall include chlorine disinfection for inactivation of *coliform* bacteria in the effluent. Disinfection design factors are provided in Table 3.4.

Table 3.4 DISINFECTION DESIGN PARAMTER SUMMARY

PARAMETER	DESIGN VALUE	BULLETIN 11 STANDARD
DETENTION PERIOD (hrs)	.25	.25
CHLORINE DOSAGE (mg/l)	8.0	8
FLOW PEAK FACTOR[1]	2.5	

[1] Maximum capacity of both flow equalization pumps.

3.8.1 DISINFECTION CHEMICAL FEED EQUIPMENT

A chlorine feed pump with liquid chlorine solution shall be used to accomplish effluent disinfection. The feed pump shall have a rated capacity of twice the anticipated chlorine dosage required.

3.8.2 CONTACT BASIN DESIGN

The basin design shall include over-under type baffling to prevent short-circuiting of the contact basin. Dewatering of the contact basin, when required, shall be accomplished by use of a portable, submersible dewatering pump.

3.8.3 DECHLORINATION CHEMICAL FEED EQUIPMENT

A dechlorination tablet feeder shall be installed on the gravity overflow outlet line from the chlorine contact basin to accomplish dechlorination of the effluent. The tablet feeder shall be a flow rated proportional feeder that allows for long-term unattended operation while providing a stable, adjustable chemical dose. Treatment of the wastewater effluent shall be accomplished by immersion of feed tubes containing vertically stacked chemical tablets. Chemical agents shall be released as the liquid erodes the tablets. The tablet feeder shall be equipped with a self-draining flow channel to allow

complete dry down of the chemical tablets during low and/or no flow conditions to ensure long-term tablet integrity.

3.9 CONTAINMENT STRUCTURES

All containment structures including tanks, vessels, connections and piping containing raw or treated wastewater or effluent shall be watertight during normal operation.

4 CONSTRUCTION MANAGEMENT

4.1 INTRODUCTION:

For most endeavors, project goals and objectives can only partially be defined by contract language. The key to success rests in good faith agreements between all parties to create an environment of mutual respect and trust, and to foster a teamwork approach. These Construction Administration Procedures have been developed to enhance communication among the project team. These procedures provide guidelines to be followed, but do not address all the requirements of the contract documents, nor take precedence over the contract documents.

4.2 PROJECT TEAM:

The project team consists of the following:

	OWNER	WWTP PROJECT ENGINEER	FACILITY SUPPLIER
NAME:	Utility Source L.L.C.	Santec Corporation	Santec Corporation
CONTACT:	Lonnie McCleve	Daniel Dow, P.E.	Dwight Zemp, V.P.
PHONE:	480.892.8756	303.660.9211 ext. 15	303.888.4977
FAX:	480.892.3387	303.660.2180	303.660.2180
EMAIL:		ddow@santeccorporation.com	dzemp@santeccorporation.com
MAILING ADDRESS:			
PHYSICAL ADDRESS:	721 E. San Pedro	220 Malibu Street	220 Malibu Street
CITY / STATE / ZIP:	Gilbert, AZ 85234	Castle Rock, CO 80109	Castle Rock, CO 80109

4.3 COMMUNICATION AND CORRESPONDANCE:

During the performance of daily activities, the contractor may find it necessary to have discussions and brief meetings with the construction teams. In the overall spirit of teamwork, the contractor will be expected to maintain appropriate records of the discussions and meetings.

4.4 SPECIAL MEETINGS:

As required by job conditions, special meetings may be called by the project manager, or may be requested by the contractor to discuss any particular problem or situation that may arise. The contractor will attend all meetings when requested.

4.5 SUBMITTAL PROCEDURES:

All shop drawings, qualifications, certifications, specifications, installation instructions, and other technical information required by the contract are to be submitted to the appropriate authorities.

4.6 QUALITY CONTROL

4.6.1 INSTALLATION QUALITY CONTROL

Installation contractor shall monitor and maintain quality control over suppliers, subcontractors, work force, site conditions, products and services to ensure work is of specified, consistent quality.

4.6.1.1 WORKMANSHIP

Specified requirements represent a minimum, acceptable quality for Work.

Perform work with suitable qualified personnel to produce work of specified quality

Secure products in place with positive anchorage devices designed and sized to withstand stresses, vibrations and distortion

4.6.1.2 MANUFACTURER'S INSTRUCTIONS

Comply fully with manufacturer's instructions. Perform steps in manufacturer's recommended sequence.

Should instructions conflict with contract documents, request clarification from manufacturer before proceeding.

4.7 SAFETY PLAN:

The responsibility of safety lies solely with the contractor. The contractor shall be required to comply with the safety program and all applicable federal, state, and local regulation codes, rules, laws and ordinances. The safety plan shall include, but is not limited to the following: safety and health orientation, enforcement policy, disciplinary action for non-compliance, job site safety pre-planning, emergency safety plan, accident reporting, basic safe practices, ladder safety, confined spaces, fire prevention and site security.

4.8 CONFLICT RESOLUTION:

If the contractor believes there is a conflict between elements of the contract documents, he should identify the conflict and request direction by the RFI process. After the owner has reviewed and responded to the request for information, he will transmit two copies to the contractor. If the contractor believes a written clarification or interpretation justifies an increase in the contract price, or contract time, he may make a request for change.

4.9 CONTRACTOR'S ON-SITE WORK:

The contractor will be responsible for the following work. Excavation for all tankage is shown on the plant layout drawings. All tank tie-down straps and dead men for tank anchoring. Supply and place pea gravel bed under tankage. Unload and place all tankage at elevations shown on the hydraulic profile. Supply and install all crossover piping located between tankage, including inlet and outfall lines. Backfill around tanks with pea gravel to a level just below the tank manway collars. Supply fuel storage tank and line to generator if needed. Construct concrete footers for site building as needed. Provide clean water fill for the tanks at the time of placement. Provide primary electrical power and installation of the power to the site building and each Santec control panel.

Owner furnished equipment and facilities:
Service entrance to building and any other electrical power required. Telephone service to the site building. Potable water to the site building. All required fencing and signage around the wastewater treatment plant. Landscaping around the facility. Access road to the plant site, operations and control building and sludge holding tank.

4.10 CONSTRUCTION CHECK POINTS:

At the following points checks will be made to insure installation of plant adheres to installation procedures and guidelines.
Elevations in excavation before tanks are set.
Depth of pea gravel bed
Elevations after tanks are set.
Tank tie-down and chocks
Back fill of tanks
Hydrostatic testing of tanks

4.11 START-UP:

The contractor shall initially start-up and place all equipment installed by him into successful operation according to manufacture's written instructions. A qualified manufacturer's representative, who shall certify same on the appropriate equipment start-up and training form, must verify proper checkout and start-up.

4.12 FINAL CLEANUP:

Prior to final inspection as provided for herein the contractor shall clean the entire work site.

5 SYSTEM START-UP

5.1 PRE-OPERATIONAL TESTING

5.1.1 TREATMENT PLANT CONTAINMENT VESSELS

All tanks and containment vessels shall be hydrostatic tested over a 24-hour period utilizing non-potable water.

Tanks shall be tested following installation and connection to ensure the integrity of the tanks and connections.

All connections and tanks shall be watertight during normal operation.

Tank and connection testing shall consist of two tank water level measurements taken at 24-hour intervals.

5.1.2 TREATMENT FACILITY PIPING

Gravity overflow connections shall be hydrostatic tested concurrently with hydrostatic testing of treatment plant containment vessels.

Pressurized piping shall be leak tested utilizing non-potable water.

All connections and piping shall be watertight during normal operation.

5.1.3 MECHANICAL EQUIPMENT

All mechanical equipment lubrication, connection and installation shall be verified prior to mechanical equipment start-up.

Nameplate data shall be recorded on forms provided by the equipment supplier.

5.1.4 ELECTRICAL EQUIPMENT

All electrical equipment including motors, control panels and distribution panels shall be inspected to ensure proper connection prior to start-up.

Controls panels shall be tested for proper operation by the panel manufacturer prior to installation.

All motors including pump and blower motors shall be monitored during pre-operational testing to ensure operation consistent with manufacturer's nameplate loads.

Back-up power start-up shall be conducted by an authorized representative of the equipment supplier.

5.2 FACILITY START-UP FOR BATCH OPERATION

Wastewater treatment facilities providing service to new developments typically experience large fluctuations in the incoming wastewater flow rate until the development is over 20% constructed. During the initial construction of the development, low flows typically less than 25% of the design average daily flows are anticipated. Treatment of the waste stream prior to full-start up of the facility is accomplished by operating the flow equalization basin in a batch operation mode. Operating the treatment facility in this fashion provides treatment of all sewer flows from the onset of the project while minimizing the cost of plant operations.

The following sequence illustrates operation of the basin in the batch operation mode:

1. Incoming flow is received from the collection system in the aerated flow equalization basin.

2. Incoming flows are stored in the equalization basin until a pre-set level is reached.
3. When the pre-set level is reached, the auto-dialer will notify the operator of the facility.
4. The operator will interrupt the aeration cycle and allow the solids to settle to the bottom of the basin.
5. Utilizing the flow equalization pumps, the operator will decant the supernatant into the head of the aeration basin.
6. Aeration to the equalization basin and treatment process is restarted.
7. As the flow goes through the plant, further treatment and clarification will occur with the alternating aeration and settling cycles prior to discharge from the secondary clarifier.

Treatment systems that require nitrogen removal can be operated in alternating aerobic and anoxic conditions in the equalization basin. This mode utilizes the incoming sewage flow as a carbon source during anoxic cycles.

5.3 FACILITY START-UP FOR CONTINUOUS OPERATION

Full-scale operation of the treatment facility is typically conducted when the average daily flow to the treatment facility is 25% of the design average daily flow. Batch treatment of the waste is discontinued and continuous flow operation commences.

The design of the facility incorporates several features for operation of the facility at average daily flows significantly less than design flow.

1. The flow equalization basin incorporates a flow control system to maintain continuous flow to the aeration process.
2. The pump discharge feed line from the flow equalization basin can be directed to one of several points in the aeration tank to process the wastewater at the best food to micro organism ratio. Typically start-up is conducted with the feed from the flow equalization basin discharging in the final 1/3 of the aeration basin.
3. When the hydraulic detention time in aeration is less than 18 hours, the feed line from the flow equalization basin is diverted to the next upstream feed point.

5.4 EFFLUENT CHARACTERISTICS DURING START-UP

5.4.1 BOD_5

During start-up, effluent BOD_5 is typically in compliance with permit limits. Continuous flow and high food to micro organism ratios facilitate rapid biomass growth and subsequent removal of the organic substrate.

5.4.2 TSS

During start-up, effluent TSS typically requires 5-10 days to be in compliance with permit limits. Sufficient biomass and sludge age must be developed to provide proper flocculation and settling the clarifier for removal of suspended solids.

5.4.3 pH

During start-up, effluent pH is typically in compliance with permit limits.

5.4.4 FECAL COLIFORM

During start-up, effluent Fecal Coliform levels are typically in compliance with permit limits.

5.4.5 TOTAL NITROGEN

During start-up, effluent Total Nitrogen levels typically require 30-60 days to develop the microbial populations to maintain discharge permit limits.

5.5 TIME FRAME FOR MEETING PERFORMANCE REQUIREMENTS

Continuous start-up of the facility typically requires *60 days* or less to develop the mixed liquor concentrations and microbial populations appropriate for the influent loading.

Effluent typically requires *60 days* or less to meet performance requirements.

6 PLANNED, NORMAL OPERATION

Please refer to the Flow Process Diagram (Plan sheet #3, Section 3) for references in this section.

6.1 FLOW EQUALIZATION

Raw wastewater is received from the collection system in Manway Number 1 (FEQ#1). This manway is located on the Flow Equalization Basin (FEQ).

6.1.1 FLOW EQUALIZATION

The FEQ is continuously aerated to maintain a complex mix of the basin contents and prevent septic conditions from creating odors. The completely mixed wastewater in the basin is pumped to aeration.

6.2 AERATION

The pump discharge pipe line discharges through one of four Process Feed Valves (PFV). The PFV are slide gate valves (PF-1 to PF-4) and are located in the manways of the aeration tank and on the ends of branches of the pump discharge pipeline. Raw sewage flow passes through the pump discharge pipeline to the aeration tank through one of three slide gate valves (PF-1 thru PF-2). The slide gate valves are set at OPEN/CLOSED to direct where in the aeration tank the feed is to enter. They are not be used to control the pump discharge rate to the aeration tank.

During normal operation at the design average daily flow rate, PF-1 (ANX#1) is open and PF-2 through PF-4 are closed. This directs the incoming waste stream to the anoxic tank ahead of the aeration tanks.

6.2.1 ANOXIC

The anoxic tank receives Nitrified Mixed Liquor (NMLR from the end of aeration). The anoxic basin is designed to remove the readily soluble portion of the waste stream, promote new biomass growth and operate as an aerobic selector. Utilizing the anoxic tank in this fashion helps balance the oxygen demand at the point of RAS(return activated sludge) return.

Dissolved Oxygen (D.O.) levels should be maintained less than .25 mg/l in the anoxic tanks.

6.2.2 AERATION

As flow passes through the anoxic tank and into the remainder of the aeration process, RAS is returned to AER #1 through slide gate valve RA-1; RA for Return Activated Sludge. RA-1 should be used for ON/OFF control of the recycle only and should not be used to control the recycle rate. Slide gate valve RA-3 opens in the sludge holding tank to enable wasting Return Activated Sludge when needed; RA-2 should be closed during normal operation. The Airlift Recycle Valve No. 1 (RET-2) is a gate valve and is available to adjust the air flow to the airlift pump to control the RAS recycle rate.

D.O. levels should be maintained at 1.5 to 2.0 mg/L. Excessive aeration and D.O. levels should be minimized to promote low D.O. in the denitrification process.

6.3 DENITRIFICATION

Flow passes from the aeration tank and into the anoxic Denitrification basin. MLR is returned to DEN#1 through slide gate valve ML-2; ML for Mixed Liquor Return. ML-2 should be used for ON/OFF control of the recycle only and should not be used to control the recycle rate. Valve ML-3 is available to waste Mixed Liquor Return to the sludge holding tank and should be closed during normal operation. The Airlift Recycle No. 2 (RET-1) is a gate valve and is available to adjust the air flow to the airlift pump to control the MLR recycle rate.

Airlift type mixers are located in the DEN manways to promote mixing in denitrification. The external carbon source (typically methanol) for denitrification is fed directly into the top of the mixer. The mixers should discharge 1 to 2 inches above the static level in the basin to minimize oxygen entrainment in the anoxic tank from the airlift mixer.

D.O. should not be present in the denitrification basin. If D.O. in excess of .25 mg/l is present, Air Control Valve, AG-5 should be closed to reduce the D.O. at the end of the aeration process.

The methanol feed rate can be adjusted with the methanol feed pump located at the methanol storage location (often near the blowers).

Flow exits the anoxic denitrification tank through the 6-inch gravity overflow line.

6.4 REAERATION

Flow enters reaeration through the 6-inch gravity overflow line from the denitrification anoxic basin. Sufficient aeration should be maintained in the reaeration basin to achieve complete mixing. Air Control Valve, AG-6 is available for use to control mixing in reaeration.

Airlifts located in reaeration basin, designated Mixed Liquor Recycle airlifts, pump MLR and discharge it into the denitrification basin.

6.5 SECONDARY CLARIFIER

Surface skimmers are located in each clarifier for the removal of scum from the surface of the clarifier.

The effluent weir is of an adjustable, V-notch design which allows for collection across the entire length of the clarifier.

Flow passes out of the effluent weir through a 6-inch gravity effluent line.

7 OPERATION AND MAINTENANCE MANUAL OUTLINE

TABLE OF CONTENTS
OPERATIONS AND MAINTENANCE MANUAL

SECTION 1 - GENERAL INFORMATION

A. Contact Information
B. Treatment plant layout
   1. Flow Equalization Basin
   2. Aeration
   3. Denitrification
   4. Clarifier
   5. Disinfection
   6. Dechlorination
   7. Sludge Holding Tank
C. Design Criteria and System Efficiency
D. Safety Procedures
E. Recommended Operations Equipment
F. Spare Parts List
G. Process Troubleshooting FAQ
H. Emergency Operating Procedure

SECTION 2 - TREATMENT PROCESS DESCRIPTION

A. Definitions
B. Plant Equipment and Operation
   1. Comminutor
   2. Lift Station
   3. Sewage Screening
   4. Flow Equalization
   5. Flow Metering
   6. Anoxic Reactor
   7. Reactor #1
   8. Reactor #2
   9. Reactor #3
   10. Reactor #4
   11. Denitrification
   12. Reaeration
   13. Clarifier
   14. Sludge Holding Tank
   15. Sand Filter
   16. Chlorination
   17. UV Disinfection
   18. Diffusers
   19. Blowers/ Motors

SECTION 3 – DAILY OPERATIONS

A. Facility Walk-thru
B. Sampling
C. Settleometer
D. Skimming
E. Laboratory Process Control

SECTION 4 – RECORDS KEEPING

A. Daily Process Control Worksheet
B. Maintenance Schedule
   For Equipment Maintenance Procedures see Equipment Data Manual

SECTION 5 – FACILITY DRAWINGS

8 METHOD OF DISPOSAL

8.1 EFFLUENT DISPOSAL

The proposed method of effluent disposal is discharge to the existing reuse system combined with discharge under the existing NPDES permit. The existing facility is permitted for up to 150,000 gpd of reuse and up to 150,000 gpd of NPDES discharge. With expanded treatment facilities of 300,000 gpd in aggregate and existing discharge capability of 300,000 gpd of combined reuse and discharge no additional means of effluent disposal are required.

8.2 SLUDGE MANAGEMENT

Waste activated sludge will be transferred from the treatment process to the sludge holding tank for further treatment and concentration prior to on-site dewatering. Final disposal will be accomplished by hauling of liquid waste sludge to an approved disposal location.

Estimated solids production is summarized below for various average daily flow volumes from 25% to 100% of average daily design flow volume.

Table 8.1

ESTIMATED WASTE SLUDGE AT VARIOUS AVERAGE DAILY FLOWS

Average Daily Flow Volume (gpd)	Estimated Waste Sludge Volume (gallons)	Net Waste Activated Sludge (pounds/day)
40,000	712	23.8
75,000	1335	44.6
115,000	2046	68.3
150,000	2669	89.1

9 CONTINGENCY AND EMERGENCY OPERATION

VIOLATION OF A PERMIT CONDITION (MECHANICAL)

The permit conditions contained in this section are defined as facility operational and inspection items for which violation does not automatically result in exceedence of discharge limits, alert levels, violation of an Aquifer Water Quality Standard or an eminent or substantial endangerment to the public health or the environment. These items generally relate to maintenance of specific equipment items and/ or treatment process units.

Table 9.1 TREATMENT FACILITY MECHANICAL INTEGRITY

Pollution Control Structure/ Parameter	Performance Level	Inspection Frequency
Pump Integrity	Good working condition	Weekly
Treatment Plant Vessels	No visible cracks or leakage	Weekly
Blower Integrity	Good working condition	Weekly
Treatment Plant Flow Meters	Good working condition	Weekly
Telemetry/ Alarm Devices	Good working condition	Monthly

CORRECTIVE ACTION

For operational levels exceeded in Table 9-1 above for mechanical equipment with duplicity:

9.1 COMMINUTOR

Bypass comminutor unit utilizing bypass valves (CB#1, CB#2). Manually cleaned bar screen serves as back-up for screening of large solids. Operation in this fashion can be conducted indefinitely until comminutor unit can be repaired or replaced.

9.2 PUMPING SYSTEMS

Pump packages are of full duplex configuration. A failed pump should be immediately repaired or replaced. During the interim period, the remaining, working pump should be utilized. Should two pumps fail during a single repair period, the flow equalization pumps and filter equalization pumps can be interchanged with corresponding adjustments to rate control for emergency operation.

Air pumps (blower package) can be operated in the same fashion as the liquid pumps.

9.3 CONTROL SYSTEMS

Control panels are provided with Hand/ Off Auto switches for operation. Should control failure exist, the equipment can be operated in hand position, bypassing automatic control of the system. Control panel should be diagnosed and repaired immediately.

9.4 FLOW METERING

The WWTP is provided with one magnetic flow meter on the pumped line from the flow equalization basin (flow monitoring point). Failed meters should be diagnosed and repaired immediately.

As an extreme contingency should the flow meter fail, operators can measure the pumping rate from the flow equalization basin utilizing a bucket and stopwatch and utilize pump run times to calculate the average daily flow.

9.5 MONITORING EQUIPMENT

Monitoring equipment such as pH and D.O. probes are provided thru various means. Operators are provided with submersible probes for monitoring these parameters in the most time efficient manner. Should the submersible probes fail, operators are also provided with colorimetric means of evaluating these parameters.

1. Initiate equipment repair procedure by one of the following:
    a. Replacement Parts
    b. Off-site unit repair
    c. Unit replacement
2. For pump equipment, ensure emergency equipment is available for usage until repair/ replacement is completed.

For operational levels exceeded in Table 9-1 for mechanical equipment without duplicity:

1. Initiate emergency operational procedures including:
    a. Standby pumping
    b. High level overflow to aeration reactors
    c. Contact equipment supplier for immediate replacement
2. For treatment plant vessel integrity.
    a. Contain the spill.
    b. Repair the damaged area
    c. Clean-up of the affected area
3. Notify the ADEQ Water Quality Compliance Unit within 5 days of becoming aware of a violation of any permit condition having been exceeded.
4. Submit a written report within 30 days of becoming aware of the violation of a permit condition having been exceeded or of a spill.

VIOLATION OF A PERMIT CONDITION (GROUND WATER QUALITY)

The permit conditions contained in this section are, if exceeded, violations of the Aquifer Water Quality Standard or alert levels specified in the Ground Water monitoring plan required for this permit with samples taken from the point of compliance.

Table 9.2

VIOLATION OF PERMIT CONDITION AT GROUND WATER MONITORING LOCATION

Pollution Control Structure/ Parameter	**Performance Level**	**Sampling Frequency**
Total Nitrogen	10.0 mg/l	Monthly
Nitrate-Nitrate as N	10.0 mg/l	Monthly
TKN	Reserved	Monthly
Fecal Coliform	<200 CFU per 100 ml	Monthly

CORRECTIVE ACTION

For levels exceeded at the groundwater monitoring point of compliance:

1. Verification sampling at the point of compliance.
2. Discharge monitoring sampling to establish effluent standard. If discharge complies with permit standards, no additional action to be taken.
3. Further monitoring and institution of operational procedures to control effluent quality.

VIOLATION OF DISCHARGE LIMITATION

The permit conditions contained in this section are violations, if exceeded, of the discharge limitations as monitored at the effluent sampling location.

Table 9.3

VIOLATION OF PERMIT CONDITION AT EFFLUENT SAMPLING LOCATION

Pollution Control Structure/ Parameter	**Performance Level**	**Sampling Frequency**
Flow: Average Monthly	.150 MGD	Daily
BOD_5 (30 day average)	30 mg/l	Weekly
BOD_5 (7 day average)	45 mg/l	Weekly
TSS (30 day average)	30 mg/l	Weekly
TSS (7 day average)	45 mg/l	Weekly
pH	6-9	Weekly
Fecal Coliform (Max)	<800 CFU	Daily
Fecal Coliform (7 sample median)	<200 CFU	Daily
Total Nitrogen	10.0 mg/l	Weekly
Nitrate-Nitrite as N	10.0 mg/l	Monthly
TKN	10.0 mg/l	Monthly

CORRECTIVE ACTION

For levels exceeded at the discharge monitoring location/ effluent sampling location:

1. Verification Sampling
2. Further monitoring to include institution of operational procedures to control effluent quality.
3. Notify the ADEQ Water Quality Compliance Unit within 5 days of becoming aware of a violation of any permit condition having been exceeded.
4. Submit a written report within 30 days of becoming aware of the violation of a permit condition having been exceeded or notice of a spill.

IMMINENT AND SUBSTANTIAL DANGER TO PUBLIC HEALTH

If an imminent and substantial endangerment to the public health or environment exists, the following actions shall be taken:

CORRECTIVE ACTION

1. Immediate cessation of discharge by:
    a. Utilization of all available storage capacity including on-site storage ponds
    b. Emergency pumping
2. Mitigation measures to limit the impact of pollutants on existing uses of the aquifer.

24-HOUR EMERGENCY RESPONSE MEASURES

The primary emergency for a continuous flow wastewater treatment facility treating primarily domestic wastewater is interruption of service to mechanical equipment. Preventive Maintenance Procedures as summarized in Table 8-1 provide the protection to mechanical failure along with normal maintenance procedures.

CORRECTIVE ACTION

Should conditions exist for whatever reason at the WWTP which cause the effluent to be classified as an imminent and substantial danger to public health, the following sequence shall be utilized.

1. Immediate cessation of discharge
2. Utilization of existing storage capacity in flow equalization basin and sludge holding tank
3. Vault and Haul of raw sewage from flow equalization basin as possible.
4. Notify the ADEQ Water Quality Compliance Unit immediately regarding emergency response measures taken.
5. Submit a written report within 30 days of becoming aware of the violation of a permit condition having been exceeded or notice of a spill.

EMERGENCY RESPONSE COORDINATOR

Name of Operator: **Pat Carpenter**
Operator Mailing Address:

Phone: **928-606-0498**
Fax:
Operator:

10 CLOSURE PLAN

The design of the facility is for temporary operation; when the facility is decommissioned, the facility equipment is designed to be completely removable from the site, and the site re-mediated with no further monitoring required.

10.1 MATERIALS TO BE REMOVED FROM SITE

10.1.1 PROCESS WATER, MIXED LIQUOR, WASTE SLUDGE

All process water, mixed liquor and sludge will be removed by an approved sludge hauler to the same location as the waste sludge. Process tankage will be cleaned and rinsed utilizing non-potable water to minimize vector attraction.

10.1.2 TANKS VESSELS AND MECHANICAL EQUIPMENT

All process tanks, vessels, mechanical equipment and piping will be removed from the site and transported to an appropriate storage area. Should the facility not be reclaimed or reused, the cleaned process tanks and vessels can be crushed for removal to an appropriate landfill facility.

10.2 POST CLOSURE MONITORING

All facility material will be removed from the site prior to final closure of the facility. The site will likely be graded, landscaped and reclaimed for appropriate usage. No post closure monitoring is required as a result of WWTP closure.

11 COST ESTIMATES

Line Item	Estimated Cost	Responsible Entity
Phase 1 Items		
Facility Equipment	$673,940.00	Utility Source L.L.C.
Facility Construction & Installation	$70,000.00	Utility Source L.L.C.
Operation & Maintenance	$49,472/ yr	Utility Source L.L.C.
Facility Decomissioning	$40,000.00	Utility Source L.L.C.
Post Closure Monitoring[1]	--------	Utility Source L.L.C.
Phase 2 Items		
Facility Equipment	$438,711.00	Utility Source L.L.C.
Facility Construction & Installation	$70,000.00	Utility Source L.L.C.
Operation & Maintenance Phase 1&2	$87,479/ yr	Utility Source L.L.C.
Facility Decomissioning	$40,000.00	Utility Source L.L.C.
Post Closure Monitoring[2]	--------	Utility Source L.L.C.

[1] Per closure plan all materials to be removed from site and site remediated
[2] Per closure plan all materials to be removed from site and site remediated

HydroSystems Inc.
1220 S. Park Lane, Suite 5 Tempe, AZ 85281
Telephone: 480-517-9050 Fax: 480-517-9049

Principals
Gary G. Small
Roxanne Small

Business Manager
Peggy Olsen

Team HSI
Kathy Dunham
Sheila Ehlers
Katherine Geiger
Tomas Goode
Nancy La Mascus
Miles McGinnis
Marla Mikaelian
Phil Paski
Steve Skotnicki
Blake Small
Chris Weyrauch

December 23, 2005

Mr. Doug Dunham
Manager
Office of Assured and Adequate Water Supply
Arizona Department of Water Resources
3550 North Central Avenue
Phoenix, Arizona 85012

Subject: Physical Availability Demonstration for Utility Source, LLC

Dear Doug:

HydroSystems Inc. (HSI) has been contracted by Utility Source, LLC who is applying to the Arizona Department of Water Resources (ADWR) to expand the demonstration of the physical availability of groundwater for their service area in the community of Bellemont, Arizona. This Physical Availability Demonstration (PAD) expands upon a previous PAD that was submitted in July and approved in October of 2004. The expansion is based upon locating, drilling, and testing of a new deep well (Deep Well 4) this year to serve the new development. This PAD demonstrates that groundwater supplies from the regional aquifer are physically available to serve the existing, committed, and projected demand of the subject properties. This PAD will be used to support an application for water adequacy and the Arizona Corporation Commission's (ACC) decision to issue an extension of the Certificate of Convenience and Necessity (CCN) for Utility Source, LLC. Utility Source, LLC is the water provider for Flagstaff Meadows and other proposed properties described herein and owns the necessary land, wells, and improvements to serve the new development. It is expected that the CCN extension will be conditional upon ADWR's determination that a 100-year adequate water supply exists for the new service area. An application for a water adequacy report will be submitted to ADWR once a PAD is issued from the ADWR.

Recent drilling, aquifer testing, and water chemistry results from Deep Well 4 have provided valuable information regarding groundwater development for the future water demands in the area. Based upon information collected from aquifer step testing and a seven day continuous rate aquifer test at 371 gallons per minute, groundwater production from Deep Well 4 is estimated at 600 acre-feet per year. Utility Source is respectfully requesting that ADWR review the supporting documentation contained in this PAD in support of an annual available groundwater resource of 771 acre-feet which includes all the wells owned by Utility Source, LLC.

We appreciate the Department's expedited review of this application, so that our process to obtain a Certificate of Convenience and Necessity (CCN) can proceed with the Arizona Corporation Commission. Please contact Sheila Ehlers or Phil Paski with any questions you have regarding our application at 480-517-9050.

Sincerely,

Phillip M. Paski, R.G., CGWP
Senior Hydrogeologist

Physical Availability Demonstration

For

Utility Source, LLC
Coconino County, Arizona

Prepared for:

Utility Source, LLC

721 East San Pedro
Gilbert, Arizona 85234

Prepared by:

HydroSystems, Inc.

1220 S. Park Lane, Suite 5
Tempe, Arizona 85281
P: 480.517.9050 F: 480.517.9049
e-mail: info@hydrosystems-inc.com
website: www.hydrosystems-inc.com

December, 2005

EXECUTIVE SUMMARY

Utility Source, LLC is applying to the Arizona Department of Water Resources (ADWR) for an expanded Physical Availability Demonstration (PAD) to prove that groundwater resources are available to serve the proposed extension of its Certificate of Convenience and Necessity (CCN). In 2004, ADWR approved a PAD of approximately 110 acre-feet per year. The CCN extension currently under review by the Arizona Corporation Commission is based on the successful outcome of the recent drilling and testing of a fourth deep well near the current CCN for Utility Source, LLC. The proposed demand to serve the new development identified in the CCN extension is 446 acre-feet per year. This demand is expected to increase based on the requests for water supplies from potential users.

This well, known as Deep Well 4, is located east of the current service area and was located using a surface geophysical survey method called controlled source audio-frequency magnetotellurics (CSAMT) to determine the subsurface geologic structure beneath the property. This same method was used to locate Deep Well 3 that serves Utility Source, LLC. This geophysical survey method has been an extremely useful tool to locate areas of high resistivity values deep beneath the land surface, such as faults and fractures, which may not be seen on the ground surface. Furthermore, since faults usually dip at an angle to the ground surface, this methodology allows the wells to be sited to intersect the fault beneath the water bearing zone.

The Utility Source CCN is located in an area where surface expressions of fault structures have been mapped by the United States Geologic Survey (USGS). Using these maps, nine separate survey lines were positioned to help locate the subsurface location of an unnamed fault on 20-acres of land, now owned by Greenfield Land Development. These nine lines are in addition to eight lines that were used to locate Deep Well 3, previously. Together, these seventeen lines provided the basis for a three dimensional view into the study area below the Utility Source service area.

Once the survey was complete and the data analyzed, the location for Deep Well 4 was determined along the unnamed fault. This fault, trending in a northwest direction, intersects the Bellemont Fault, where Deep Well 3 is drilled. The intersection of these two faults, north of Deep Well 3, provides a large groundwater collection zone for Deep Well 4 within the regional aquifer. Deep Well 4 was drilled successfully to a depth of 2,908 feet below the land surface and

was pumped continuously at 371 gallons per minute (or approximately 600 acre-feet per year) for seven days as part of the testing. This is in vast contrast to Deep Well 1 and Deep Well 2 also located in the regional aquifer but outside of a fault zone. These wells only produce approximately 11 and 23 gallons per minute, respectively.

Using data from the aquifer testing and other published information, a simple groundwater flow model was utilized to estimate the drawdown impacts of withdrawing groundwater from Deep Wells 1-4 for 100-years. Approximately 480 gallons per minute (or 771 acre-feet per year) was simulated for the 100-year timeframe. The resulting drawdown within the Utility Source, LLC CCN was conservatively estimated at 297 feet.

This estimated projected impact is more conservative (greater than) than the actual impacts seen from approximately 50 years of data from four of the Flagstaff Woody Mountain wells from within the same regional aquifer. These wells have experienced local water level declines within the regional aquifer ranging from 18 to 65 feet (0.36 to 1.38 feet per year) over a 50 year period. Their pumping rates ranged from 250 to 575 gallons per minute totaling 1,626 acre-feet for the year 2004. The estimated annual groundwater production of 771 acre-feet for the proposed extension of the CCN is approximately 46 percent of the four Woody Mountain well production rates for the year 2004. In consideration of the actual decline rate of a major city well field with 50 years of record near the Utility Source Service Area, the impact calculated by the theoretical model should be viewed as a very conservative estimate.

The Arizona Administrative Code, R12-15-717, specifies that in order to approve the Physical Availability determination at depths greater than 1200 feet below land surface, a waiver may be obtained if the groundwater is available at the lower depths and the applicant demonstrates the financial capability to obtain the groundwater. For this PAD, the static water level of Deep Well 4 is 1,675 feet below land surface and requires a waiver of the depth to water criteria. This hydrologic report demonstrates that groundwater is available at these lower depths to meet the 100-year demand. Furthermore, Utility Source, LLC meets the financial capability criteria by already funding and drilling the deep wells they propose to use.

Table of Contents

Executive Summary

Section No. **Page No.**

1.0 Introduction 1
- 1.1 Goal of the PAD 2
- 1.2 Communication and Site Visitation 2

2.0 Elements of Demand 4

3.0 Elements of Supply 6
- 3.1 Shallow Wells 6
- 3.2 Deep Wells 6
- 3.3 Effluent 7

4.0 Previous Investigations 8
- 4.1 Well Site Evaluation and Geophysical Survey 8
- 4.2 PAD Analysis Deep Well 3 9

5.0 Geology 12
- 5.1 Physiographic Setting 12
- 5.2 Regional Geology 13
- 5.3 Local Geology 13
- 5.4 Structural Interpretation 14

6.0 Hydrogeology 16
- 6.1 Wild Bill Hill Aquifer 16
- 6.2 Regional Coconino Aquifer 17

7.0 Surface Geophysical Survey 22
- 7.1 Method Overview 22
- 7.2 Survey Parameters 23
- 7.3 Field Instrumentation 24
- 7.4 Inversion Models 24
- 7.5 Data Quality 25
- 7.6 Survey Results 26
- 7.7 Conclusions 29

8.0 Drilling and Well Construction Deep Well 4 30
- 8.1 Borehole Drilling 30
- 8.2 Sample Collection and Logging 32
- 8.3 Slotted Casing Installation and Well Completion 34
- 8.4 Well Development 34

Table of Contents

Section No.		Page No.
9.0	**Aquifer Testing**	37
9.1	Testing Equipment	37
9.2	Aquifer Testing	41
9.3	Data Analysis	43
9.4	Deep Well 3 and Deep Well 4 Comparison	46
9.5	Woody Mountain Well Field	47
9.6	Water Chemistry	49
10.0	**Drawdown Analysis**	51
10.1	Model Description	51
10.2	Aquifer Parameters	51
10.3	Theoretical Drawdown Impact Analysis	53
10.4	Actual Versus Theoretical Impact Analysis	53
11.0	**Conclusions**	54
12.0	**References**	55

List of Figures

Figure No.	
1	Local Study Area
2	Proposed CCN Expansion
3	Regional Study Area
4	CSAMT Line Locations for Deep Well 3
5	Deep Well 3 Line 1 CSAMT Survey
6	Generalized Stratigraphic Section of Rock Units, Flagstaff, Arizona
7	Fault Locations in the Bellemont Area
8	Regional Aquifer Well Locations
9	Enlarged CSAMT Line Locations for Deep Well 4
10	Deep Well 4 Line 1 CSAMT Survey
11	Line 2 CSAMT Survey
12	Line 3 CSAMT Survey
13	Line 4 CSAMT Survey
14	Line 5 CSAMT Survey
15	Line 6 and Line 7 CSAMT Survey
16	Line 8 (Lot 31) CSAMT Survey
17	Line 9 CSAMT Survey
18	Fault Locations and All CSAMT Survey Lines
19	Deep Well 4 Conceptual Well Design
20	Lithologic and Geophysical Logs Deep Well 4

Table of Contents

21 Grand Canyon Sedimentary Units
22 Meteoric Water Line Plot of Stable Isotopes near Flagstaff Meadows Study Area
23 Groundwater Flow Model Grid and Boundary Conditions
24 Model Hydraulic Conductivity Values
25 Steady State Water Level Elevation
26 100 Year Impact Analysis Results

List of Tables

Table No.

1 Utility Source 100-Year Projected Supply and Demands
2 Flagstaff Meadows Units I and II Actual Meter Readings
3 Flagstaff Meadows Townhomes Actual Water Use
4 Well Summary
5 Well Development Summary Deep Well 4
6 Summary of Drinking Water New Source Results for Deep Wells 3 and 4

List of Photos

Photo No.

1 Aluminum foil, salt, and water in hand excavated transmitter dipole site
2 Appearance of "ready for use" transmitter dipole site
3 GDP-32II receiver and ceramic pot used for GLD CSAMT survey
4 Transmitter truck and portable generator
5 Drilling and placement of 16-inch steel casing
6 12-inch under reamer hammer bit with wing extended
7 Unexpected groundwater discharge from well when making a pipe connection
8 Groundwater discharge to cyclone
9 Additional air system supplied by the Weatherford Company
10 Tricone bit missing one cone in deep fracture at 2,908 feet
11 Samples collected in 5-foot intervals and placed in cloth bags
12 8-inch slotted casing
13 6-inch slotted casing
14 Air lift development from 2,100 feet, flow is estimated over 200 gpm
15 Rossum centrifugal sand sampler, graduated in milliliters
16 Setting Centrilift 400 horsepower pump in Deep Well 4
17 Centrilift variable frequency drive (VFD)
18 In-line propeller flow meter showing dial in gpm, and totalizer in gallons
19 Discharge pipe with 4-inch orifice plate and manometer
20 Transducers set in Deep Well 4 sounding tubes

Table of Contents

List of Graphs

Graph No.	
1	Pumping Rate Comparison at Deep Well 4
2	Specific Capacity Comparison Deep Well 4
3	Step 1 Drawdown and Recovery Deep Well 4
4	Step 2 Drawdown and Recovery Deep Well 4
5	Step 3 Drawdown and Recovery Deep Well 4
6	Constant Rate Aquifer Test Drawdown and Recovery Deep Well 4
7	Constant Rate Aquifer Test - Drawdown
8	Constant Rate Aquifer Test - Recovery
9	Water Level Hydrograph for Deep Well 3

List of Appendices

Appendix No.	
A	Ownership Details
B	Water Use Billing Records For Flagstaff Meadows Units I and II
C	Year 2000 Data from the U.S. Census Bureau for Coconino County
D	Bellemont Well Logs
E	GWSI and 55-Files
F	Lithologic Log Deep Well 4
G	Well Development
H	Step Test and Constant Rate Test Field Notes and Measurements
I	City of Flagstaff Water Level History
J	ADWR and USGS Water Quality Data
K	Digital Model Files

Corporation 220 Malibu Street Castle Rock, Colorado 80104 Phone (303) 660-9211 Fax (303) 660-2180

WASTEWATER TREATMENT PLANT DESIGN REPORT AND SUBMITTAL

for

Flagstaff Meadows Site 2 WWTP

Bellemont, Arizona

Coconino County

Prepared for:

Utility Source L.L.C.
721 E. San Pedro
Gilbert, Arizona 85234

Prepared by:

Santec Corporation
220 Malibu Street
Castle Rock, Colorado 80109

1

WASTEWATER TREATMENT PLANT DESIGN REPORT AND SUBMITTAL

for

Flagstaff Meadows Site 2 WWTP

Bellemont, Arizona

Coconino County

Prepared for:

Utility Source L.L.C.
721 E. San Pedro
Gilbert, Arizona 85234

Prepared by:

Santec Corporation
220 Malibu Street
Castle Rock, Colorado 80109

TABLE OF CONTENTS SECTION 1

FLAGSTAFF MEADOWS SITE 2 WWTP

WASTEWATER TREATMENT PLANT DESIGN REPORT AND SUBMITTAL

1 ADMINISTRATIVE INFORMATION 1
1.1 GENERAL DESCRIPTION 1
1.2 PURPOSE OF DESIGN REPORT AND SUBMITTAL 1
2 WASTEWATER CHARACTERIZATION 2
2.1 WASTEWATER FLOW PROJECTIONS 2
2.1.1 DESIGN WASTEWATER TREATMENT PLANT FLOW 2
2.2 PHYSICAL, CHEMICAL AND BIOLOGICAL CHARCTERISTICS 2
2.3 SEASONALITY 3
2.3.1 VARIATIONS IN FLOW 3
2.3.2 TEMPERATURE VARIATIONS 3
2.4 DAILY FLOWS APPROACHING DESIGN FLOW 4
2.4.1 HYDRAULIC IMPACT 4
2.4.2 IMPACT OF FLOW ON TREATMENT PERFORMANCE 4
2.4.3 DESIGN FEATURES 4
3 BADCT DEMONSTRATION 5
3.1 TREATMENT PROCESS DESCRIPTION 5
3.2 FLOW EQUALIZATION 5
3.2.1 VARIATION IN FLOW 5
3.2.2 BASIN LOCATION 5
3.2.3 IN-LINE EQUALIZATION 5
3.2.4 BASIN VOLUME 6
3.2.5 BASIN CONSTUCTION 6
3.2.6 PUMPS AND CONTROLS 6
3.3 AERATION PROCESS 7
3.3.1 RETURN SLUDGE 7
3.3.2 BASIN CONFIGURATION 7
3.3.3 AERATION EQUIPMENT 8
3.3.4 WASTE SLUDGE DISPOSAL 9
3.3.5 SAMPLING AND MEASURING DEVICES 9
3.4 NITRIFICATION PROCESS SUMMARY 10
3.4.1 WORKING VOLUME 10
3.4.2 OXYGEN REQUIREMENTS 10
3.4.3 ALKALINITY REQUIREMENTS 10
3.4.4 ALKALINITY CONTROL and pH MEASURMENTS 10
3.5 DENITRIFICATION PROCESS SUMMARY 11
3.5.1 BASIN CONFIGURATION 11
3.5.2 RETURN SLUDGE AND WASTING 12
3.6 REAERATION PROCESS SUMMARY 12
3.6.1 BASIN CONFIGURATION 12
3.6.2 MIXED LIQUOR RETURN AND WASTING 13
3.7 SECONDARY CLARIFIER SUMMARY 13

3.8 DISINFECTION AND DECHLORINATION 14
3.8.1 DISINFECTION CHEMICAL FEED EQUIPMENT 14
3.8.2 CONTACT BASIN DESIGN 14
3.8.3 DECHLORINATION CHEMICAL FEED EQUIPMENT 14
3.9 CONTAINMENT STRUCTURES 15
4 CONSTRUCTION MANAGEMENT 15
4.1 INTRODUCTION: 15
4.2 PROJECT TEAM: 15
4.3 COMMUNICATION AND CORRESPONDANCE: 15
4.4 SPECIAL MEETINGS: 15
4.5 SUBMITTAL PROCEDURES: 15
4.6 QUALITY CONTROL 16
4.6.1 INSTALLATION QUALITY CONTROL 16
4.7 SAFETY PLAN: 16
4.8 CONFLICT RESOLUTION: 16
4.9 CONTRACTOR'S ON-SITE WORK: 16
4.10 CONSTRUCTION CHECK POINTS: 17
4.11 START-UP: 17
4.12 FINAL CLEANUP: 17
5 SYSTEM START-UP 18
5.1 PRE-OPERATIONAL TESTING 18
5.1.1 TREATMENT PLANT CONTAINMENT VESSELS 18
5.1.2 TREATMENT FACILITY PIPING 18
5.1.3 MECHANICAL EQUIPMENT 18
5.1.4 ELECTRICAL EQUIPMENT 18
5.2 FACILITY START-UP FOR BATCH OPERATION 18
5.3 FACILITY START-UP FOR CONTINUOUS OPERATION 19
5.4 EFFLUENT CHARACTERISTICS DURING START-UP 19
5.4.1 BOD_5 19
5.4.2 TSS 19
5.4.3 pH 19
5.4.4 FECAL COLIFORM 19
5.4.5 TOTAL NITROGEN 19
5.5 TIME FRAME FOR MEETING PERFORMANCE REQUIREMENTS 20
6 PLANNED, NORMAL OPERATION 21
6.1 FLOW EQUALIZATION 21
6.1.1 FLOW EQUALIZATION 21
6.2 AERATION 21
6.2.1 ANOXIC 21
6.2.2 AERATION 21
6.3 DENITRIFICATION 22
6.4 REAERATION 22
6.5 SECONDARY CLARIFIER 22
7 OPERATION AND MAINTENANCE MANUAL OUTLINE 23
8 METHOD OF DISPOSAL 25
8.1 EFFLUENT DISPOSAL 25
8.2 SLUDGE MANAGEMENT 25
9 CONTINGENCY AND EMERGENCY OPERATION 26
VIOLATION OF A PERMIT CONDITION (MECHANICAL) 26
9.1 COMMINUTOR 26
9.2 PUMPING SYSTEMS 26

9.3 CONTROL SYSTEMS 26
9.4 FLOW METERING 26
9.5 MONITORING EQUIPMENT 27
VIOLATION OF A PERMIT CONDITION (GROUND WATER QUALITY) 28
VIOLATION OF DISCHARGE LIMITATION 28
IMMINENT AND SUBSTANTIAL DANGER TO PUBLIC HEALTH 29
24-HOUR EMERGENCY RESPONSE MEASURES 29
EMERGENCY RESPONSE COORDINATOR 29
10 CLOSURE PLAN 30
10.1 MATERIALS TO BE REMOVED FROM SITE 30
10.1.1 PROCESS WATER, MIXED LIQUOR, WASTE SLUDGE 30
10.1.2 TANKS VESSELS AND MECHANICAL EQUIPMENT 30
10.2 POST CLOSURE MONITORING 30
11 COST ESTIMATES 31

1 ADMINISTRATIVE INFORMATION

1.1 GENERAL DESCRIPTION

The proposed Flagstaff Meadows Site 2 wastewater treatment plant will serve both the new proposed Cabins at the Peaks sub-division located about a mile west of the site and some flow from a travel center located in the lot adjacent to the site. This plant will be located directly north of the Bellemont exit on I-40 and will be build in two phases to accommodate the increased flow as the Cabins at the Peaks sub-division is built. Both phases will treat 75,000 gpd each for a total of 150,000 gpd at full buildout. This sub-division is composed of 283 residential lots. The Santec wastewater treatment plant that will treat the domestic wastewater from the development and travel center is described in this document.

1.2 PURPOSE OF DESIGN REPORT AND SUBMITTAL

The purpose of the Design Report and Submittal is to provide the administrative information, facility design details and construction details in support of the Significant Amendment to Aquifer Protection Permit filed on behalf of Utility Source L.L.C. *This design report contains the details required by section R18-9-B202 of the Arizona Administrative Code.*

This Design Report and Submittal is to provide the design details of the proposed wastewater treatment facility from the outlet of the collection system at the wastewater treatment facility to the final treatment unit prior to effluent disposal.

2 WASTEWATER CHARACTERIZATION

2.1 WASTEWATER FLOW PROJECTIONS

2.1.1 DESIGN WASTEWATER TREATMENT PLANT FLOW

Each proposed phase of the WWTP will have an average flow design capacity of 75,000 gpd. This 75,000 gpd capacity will serve a population of at least 750 persons; calculating sewage flow at 100 gpd/capita per the ADEQ Engineering Bulletin No. 11. Because dwellings are often used as seasonal homes in the area, flows approaching the rated WWTP capacity are not anticipated; however, peak flows may be experienced on weekends and holidays. Included in the dwelling unit numbers is a calculated quantity of flow that will be generated from the travel center.

Table 2.1 WASTEWATER FLOWS

Contributing Development	Dwelling Units	Projected Unit Flow (gpd/ unit)	Nominal Plant Capacity (gpd)
Flagstaff Meadows Site 2 WWTP phase 1	**428**	**175**	**75,000**
Flagstaff Meadows Site 2 WWTP phase 2	**428**	**175**	**75,000**

2.2 PHYSICAL, CHEMICAL AND BIOLOGICAL CHARCTERISTICS

The wastewater treatment facility has been designed assuming medium-strong strength wastewater as shown in Table 2.2 from *Wastewater Engineering Treatment, Disposal and Reuse* (Metcalf and Eddy, Fourth Edition, page 186, Table 3-16).

The projected organic loading of 200 mg/l BOD_5 and 220 mg/l TSS is in conformance with the recommendation in Figure VI-2 on Page VI-6 of *Minimum Requirements for Design, Submission of Plans and Specifications of Sewage Works, Engineering Bulletin No. 11*, Arizona Department of Environmental Quality, July 1978.

Table 2.2 TYPICAL COMPOSITION OF DOMESTIC WASTEWATER
(All values except settable solids are expressed in mg/L)

CONSTITUENT	CONCENTRATION		
	Strong	**Medium**	**Low**
Solids, total	1,230	720	390
Dissolved, total	860	500	270
Fixed	520	300	160
Volatile	340	200	110
Suspended, total	400	210	120
Fixed	85	50	25
Volatile	315	160	95
Settleable solids, ml/L	20	10	5
Biochemical oxygen demand (20° C)	350	190	110
Total organic carbon (TOC)	260	140	80
Chemical oxygen demand (COD)	800	430	250
Nitrogen (total as N):	70	40	20
Organic	25	15	8
Nitrites	0	0	0
Nitrates	0	0	0
Phosphorous (total as P):	12	7	4
Organic	4	2	1
Inorganic	8	5	3
Chlorides	90	50	30
Alkalinity (as $CaCO_3$)		60-120	
Grease	100	90	50

Table contents from *Wastewater Engineering Treatment, Disposal and Reuse*, Metcalf and Eddy, Inc. Fourth Edition Table 3-15, 3-16.

2.3 SEASONALITY

2.3.1 VARIATIONS IN FLOW

Since the Flagstaff Meadows Site 2 WWTP will serve a proposed, new development, no data on existing flow variations is available.

The Santec WWTP design incorporates features that enable the facility to be operated flexibly and to effectively treat flow variations. The Santec WWTP is designed to treat average daily flows from 25% to 100% of the design flow. Detailed information regarding WWTP operation, including average daily flows below 25% of design, can be found in the start-up procedure.

2.3.2 TEMPERATURE VARIATIONS

A specific feature of the Santec design that results in consistent, high-quality sewage treatment is the use of horizontal cylindrical tanks that are installed completely below grade. The below grade, totally enclosed tanks retain the heat generated by the oxidation process and process air blowers for more rapid waste stabilization. The earth-insulated tank provides maximum protection from temperature variations in the surrounding air and establishes consistent microbe growth and wastewater stabilization. Effective treatment to the performance level specified can be maintained with mixed liquor temperatures in the range of 10 °C to 35 °C. This range is based on operational observation and data from Santec Corporation WWTP's located throughout the U.S.

2.4 *DAILY FLOWS APPROACHING DESIGN FLOW*

2.4.1 HYDRAULIC IMPACT

The Flagstaff Meadows Site 2 WWTP average design flow of 75,000 gpd was developed Paragraph 2.1.2. Treatment facility force mains, gravity piping, recycle piping and aeration systems have each been sized based on this design flow.

The proposed wastewater treatment plant incorporates flow equalization to dampen peak flows received by the wastewater treatment facility. During normal operation, peak flow to the aeration tank and other downstream treatment units is limited to 125% of the design flow. Process flow is controlled through selection of the design pumping rate, use of control valves and by use of variable speed drives. Any of these methods may be used ton control the flow rate through the process. A detailed summary of flow equalization unit operation can be found in Section 6.

2.4.2 IMPACT OF FLOW ON TREATMENT PERFORMANCE

The Santec WWTP will operate within compliance for all levels of flow up to the design capacity. Operating the Santec WWTP in accordance with the normal operating procedure will produce an effluent that meets the permitted discharge standards.

Operational experience with Santec Corporation treatment systems shows that heavy loading provides the operator with the maximum operational flexibility to maintain the design food to micro-organism (F: M) ratio in the aeration tanks.

2.4.3 DESIGN FEATURES

The proposed wastewater treatment plant for The Flagstaff Meadows Site 2 facility incorporates several design features to accommodate increasing and fluctuating wastewater flow rates:

Flow Equalization Tank - The equalization tank is provided to dampen peak flows to and throughout the facility.

Aeration Load Variation - Flexible process design and operating procedure controls the F:M ratio for flows between 25% and 125% of design rating by introducing raw sewage at one of several points in the aeration tank(s). This feature allows the operator to balance the oxygen demand in the aeration portion of the treatment process.

Aeration Detention Time - Sludge Recycle and Mixed Liquor return rates are variable and operated to optimize waste stabilization with variable detention times in treatment units.

Air Delivery System - A variable frequency drive on the blower motor control panel enables optimization of the oxygen supply to meet the microbe oxygen demand at various flow rates.

3 BADCT DEMONSTRATION

3.1 TREATMENT PROCESS DESCRIPTION

The Santec treatment plant design for the Flagstaff Meadows Site 2 WWTP is an extended aeration process which employs a single-stage system for combined carbon oxidation-nitrification and a modified denitrification sewage treatment processes[1]. The plant design utilizes multiple basins, as shown in Figure 1, to create sequential environments that promote the desired biological reactions within the treatment process.

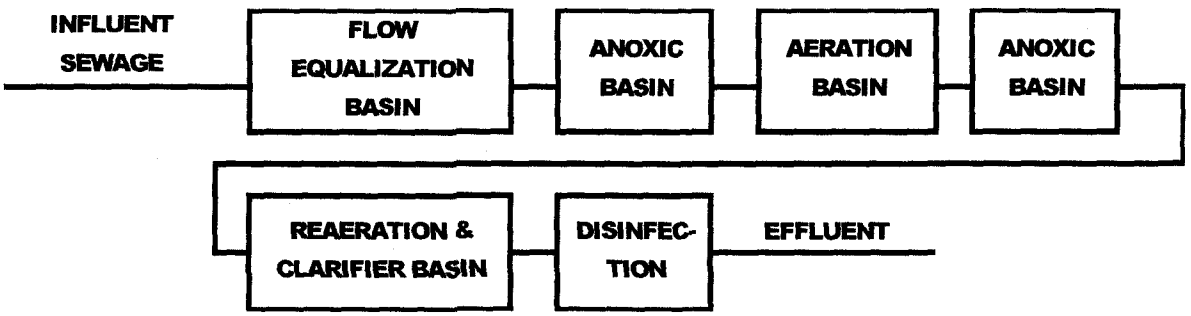

Figure 1. Sewage Treatment Process Flow Diagram.

3.2 FLOW EQUALIZATION

3.2.1 VARIATION IN FLOW

The flow equalization design incorporates automated flow control via variable pump speeds designed to provide continuous flow to the treatment process throughout the flow variability spectrum. During periods of low flow, the controls set a minimum flow to the treatment process (typically 25% of the design average flow), as the equalization basin fills, the speeds progressively increase to the maximum position. The maximum position is set to provide 125% of the design average flow to the treatment process units.

Estimates on peak flow are obtained from the 10-State Standards, "Recommended Standards for Wastewater Facilities" (Health Education Services, 1997 Edition). Detailed calculations for equalization basin design can be found in Section 2.

3.2.2 BASIN LOCATION

The flow equalization basin for the Flagstaff Meadows Site 2 facility receives the entire raw waste stream from the collection system. Headworks items such as comminution and bar screen are located ahead of the flow equalization basin for pump protection. All subsequent process units are located down stream of the flow equalization basin.

3.2.3 IN-LINE EQUALIZATION

The design of the flow equalization basin is for an in-line equalization unit. Due to the estimated variations in the influent flow rate, and in-line unit will provide better flow distribution over a 24-hour period than a side-line equalization unit.

[1] Denitrification process designation from "Process Design Manual for Nitrogen Control", U.S. EPA Technology Transfer, October 1975, Figure 5-1, pg. 5-2.

3.2.4 BASIN VOLUME

The required volume of the flow equalization basin is the peak hourly flow rate for a period of two hours minus the average pumping rate out of the basin. Detailed calculations for the basin volume can be found in Section 2.

3.2.5 BASIN CONSTUCTION

The flow equalization basin volume shall be provided in one vessel. The vessel shall be constructed as a prefabricated, cylindrical fiberglass tank, built to the standards set forth in the tank specifications.

3.2.5.1 BASIN ACCESS

Three-foot diameter access openings with four-foot diameter risers are provided for tank access, sampling and aeration piping. All internal mechanical equipment and diffusers shall be removable from the ground surface without entry into the vessel.

3.2.5.2 BASIN MIXING

The cylindrical design shall provide a smooth transitions from wall to floor to prevent the formation of "dead-zones" where little mixing occurs and prevent solids accumulation.

3.2.5.3 EMERGENCY OVERFLOW TO AERATION UNIT

A high-level, emergency, gravity overflow shall be installed to the aeration portion of the treatment process.

3.2.5.4 AIR AND MIXING

The flow equalization basin shall be capable of being mixed and aerated with course bubble diffusers to maintain aerobic conditions and prevent deposition of solids on the vessel floor. Aeration in the vessel will be controlled by a control valve located inside the access manway within easy reach of the operator to adjust aeration levels in the vessel. Diffusers shall be of coarse bubble design and provide a minimum rate of 20 cfm per 1,000 gallons of basin volume.

3.2.6 PUMPS AND CONTROLS

3.2.6.1 PUMPS

The duplex pumps will alternate duty as the lead pump and the lag pump in each sequential pumping cycle. For extended periods of operation, the lead and lag designation will alternate at 180-minute intervals.

The discharge line from each pump shall be connected in sequence to 1) a check valve, 2) a gate valve, and 3) a single pump discharge pipeline (force main) shared by both pumps. The pump discharge pipeline is routed to the influent anoxic and aeration tanks.

A magnetic flow meter displaying both gallons per minute and totalized flow is located on the pump discharge pipeline to monitor and control the flow to the treatment process.

3.2.6.2 PUMP CONTROLS

A switch for pump ON/AUTOMATIC/OFF operation shall be provided. Pump ON/OFF operation in the automatic mode shall be provided by a combination unit consisting of an ultra-sonic level transmitter and a pump control unit. Pump operation in the flow equalization basin feeds the treatment process.

The ultra-sonic level transmitter shall provide a signal for all levels of wastewater in the flow equalization basin. The pump control unit shall have a minimum of four (4) level controlled, adjustable relays. Relays shall be adjusted to the ultra-sonic level transmitter output signal to control the following functions:

1. Low Level Alarm ON

2. Lead Pump OFF level
3. Lead Pump ON level
4. Lag Pump OFF level
5. Lag Pump ON level
6. High Level Alarm ON

An alternator relay shall be provided in the control panel to alternate the operation of the pumps with each automatic ON signal and with each 180 minute ON cycle. Pump relays shall be capable of forced alternation at an adjustable time interval.

3.3 AERATION PROCESS

Detailed calculations for the aeration process design can be found in Section 2. Design values and their reference standards are given in Table 3.1.

Table 3.1 AERATION PROCESS DESIGN PARAMETER SUMMARY

PARAMETER	DESIGN VALUE	BULLETIN 11 STANDARD
AERATION PERIOD (hrs)	17.3	24.0
% RECYCLE	0%-150%	75%-150%
LBS BOD_5 / 1000 CF (ft^3)	18.9	10-20
LBS BOD_5 / LB MLSS (F/M)	0.099	0.05-0.15
LBS O_2 / LB BOD_5 REMOVED	3.3	NONE
FT^3 0_2 / LB BOD_5 REMOVED	2,100	2,100
MLSS (mg/l)	4000	2000-4000
SLUDGE AGE (days)	40	10 or more
LBS SOLIDS/ LB BOD_5 REMOVED	11.6	NONE

3.3.1 RETURN SLUDGE

The design of the Flagstaff Meadows Site 2 facility provides three pumping systems for the recycle of sludge to the process. The Return Activated Sludge (RAS) line is pumped from the secondary clarifier to multiple points in the treatment process. Flow metering is accomplished via regulation of the air flow to the airlifts. The Reaeration Mixed Liquor Return (MLR) recycle pipeline is pumped by multiple 3-inch PVC airlifts. The Nitrified Mixed Liquor Return (NMLR) line from the end of aeration to the influent anoxic tank is pumped by a single 3-inch PVC airlift. A control valve and rotameter in the Air Control Panel is available to adjust and monitor the airflow driving each airlift pump system. The airflow rate controls the sludge recycle flow rate in each recycle line.

Airlift calculations from "Centrifugal Compressor Engineering", (Hoffman Air & Filtration Division, December 1973, figure 11-6, page 257), show each 3-inch airlift capable of providing a minimum of 45 gpm of recycle flow at submergence above 40%.

The MLR airlift pumps are located in the reaeration tank. A single airflow control valve (throttling valve) is located on the MLR airline feeding the Air Control Panel. The recycled MLR flow passes to the anoxic denitrification tank.

The RAS airlift pumps are located in the clarifier. A single airflow control valve (throttling valve) is located on the RAS airline feeding the Air Control Panel. The recycled RAS flow passes to either the aeration tank or the sludge holding tank as controlled by slide gate valves for on/off control at the end of each discharge pipe.

3.3.2 BASIN CONFIGURATION

The Santec aeration tank is provided in a horizontal, cylindrical, fiberglass tank constructed to the standards set forth in the tank specifications. The cylindrical design of the vessel provides smooth

transitions from wall to floor, maintains good mixing throughout the tank, prevents solids deposition in the basin, and prevents the formation of "dead-zones" where little mixing occurs.

3.3.2.1 BASIN ACCESS

Three-foot diameter access openings with four-foot diameter risers are provided for tank access, sampling and aeration piping. All internal equipment and diffusers shall be removable from the ground surface without entry into the vessel.

3.3.2.2 DIFFUSED AERATION

Use of horizontal, cylindrical, fiberglass tanks with low length to width ratios is well documented in Arizona where Santec Corporation has installed approximately 50 similar facilities.

Design liquid depth in the aeration basin is 10 feet and 10 inches. A variation in liquid depth of 2 inches is designed due to the configuration of the inlets and outlets.

The tank design length to width ratio is 2.83:1 with a width to depth ratio of 1.1:1.0.

The diffusers in the aeration basin are positioned off the tank centerline to promote circular mixing around the circumference of the tank. The air uplift from the offset position induces a spiral roll in the mixed liquor. The spiral roll approximates plug flow through the tank, prevents short circuiting and provides excellent mixing.

3.3.2.3 INLETS AND OUTLETS

Sewage is pumped to the aeration tank(s) from the flow equalization tank or by gravity overflow from the anoxic tank. The multiple liquid flow inlets in the aeration tank(s) are equipped with multiple slide gate valves. These valves control fluid movement to various portions of the aeration tank.

The outlet from the aeration tank(s) is through a gravity overflow pipe to the denitrification chamber. This overflow pipe maintains a constant level in the aeration basin(s). The outlet from the denitrification tank passes flow to the reaeration tank.

Recycled mixed liquor return (MLR) flow from the reaeration tank passes to the anoxic denitrification tank following aeration

Return Activated Sludge (RAS) flow from the clarifier passes to either the influent anoxic tank, aeration tank or to the sludge holding tank as controlled by slide gate valves for on/off control at the end of each discharge pipe.

The design of the aeration tank incorporates a minimum 14-inch freeboard to the invert of the outlet overflow pipe. Additional freeboard shall be provided by the access manway risers at a minimum of 1-foot 6-inches. The total freeboard of the aeration tank shall be a minimum of 2-foot 6-inches.

3.3.3 AERATION EQUIPMENT

Aeration in the aeration tank shall be by fine bubble diffusers located along the length of the tank. Aeration shall be provided at a minimum of 20 SCFM per 1000 ft^3 of tank volume.

The air diffuser system piping system shall include gate valves for throttling airflow to each aeration header.

A pressure relief valve and pressure gauge port shall be installed on the main trunk line to the treatment plant.

Duplex, positive displacement blowers shall be used to provide an air supply. Duplex blower units shall be installed with chamber absorption silencers and intake filters capable of 98% efficiency on 10 micron particles. One, duplex (2 blowers total) blower systems shall be installed.

Configuration of blower controls shall provide for automatic alternation.

Blower capacity shall account for intake temperatures in excess of 120° F and compensated for pressure changes due to altitude.

Air supply shall be variable through use of a variable frequency drive (VFD) on blower motors. The VFD unit shall be equipped with a three-position switch for selecting a motor speed and easy adjustment of air supply volume.

3.3.4 WASTE SLUDGE DISPOSAL

The sludge holding tank shall provide a storage volume at a minimum of 20% of the design average daily flow.

Diffused aeration utilizing coarse diffusers shall be provided in the sludge holding tank at a minimum of 10 SCFM per 1000 ft^3.

Airlift type pump shall be provided for supernatant withdrawal. The supernatant intake level shall be adjustable. Supernatant shall be discharged into the aeration tank.

Waste sludge will be removed from the treatment plant in accordance with Section 8.

3.3.5 SAMPLING AND MEASURING DEVICES

3.3.5.1 SAMPLING LOCATIONS

Sampling of the aeration unit may be conducted at all access manways to the aeration basin. Sampling can also be accomplished from access manways in the denitrification and reaeration tanks.

All recycle streams, force main lines and waste sludge lines enter the manways at a minimum level of 12 inches above the liquid surface to provide for easy access and sampling.

3.3.5.2 FLOW MEASUREMENT

Flow measurement shall be provided at the following locations:

3.3.5.2.1 INFLUENT FLOW RATE

A magnetic flow meter shall be installed on the force main feed line between the flow equalization unit and the aeration basins. The meter shall be capable of recording totalized flow and display totalized flow and instantaneous flow rate.

3.3.5.2.2 RECYCLE AND WASTE SLUDGE LINES

Individual, area rotameters measuring the airflow shall be installed on all air lift air supply lines for measurement of recycle flow rates.

Waste sludge is removed from the treatment process on a batch basis. Waste sludge flow is equivalent to the recycle flow rate times the amount of wasting time.

Detailed instructions for waste flow measurement can be found in the normal operating procedures.

3.4 NITRIFICATION PROCESS SUMMARY

The Santec design incorporates a single-stage, suspended growth, combined carbon oxidation-nitrification process[2] for the conversion of ammonia-nitrogen to nitrate-nitrogen. The design of a single-stage, suspended growth, combined carbon oxidation nitrification process is well documented in "Process Design Manual for Nitrogen Control" and "Wastewater Engineering Treatment, Disposal and Reuse". Detailed calculations for nitrification design can be found in Section 2.

3.4.1 WORKING VOLUME

Design of the nitrification system considers that 75% of the aeration working volume is available for nitrification.

3.4.2 OXYGEN REQUIREMENTS

The process design shall provide a minimum of 4.6 lbs of O_2 per lb of ammonia-nitrogen. A minimum dissolved oxygen concentration of 2.0 mg/l shall be maintained in the aeration tank.

3.4.3 ALKALINITY REQUIREMENTS

Alkalinity is important in microbe processes because it is a measure of the buffering capacity of the water. Natural waters have three classes of materials associated with high pH levels 1) hydroxide, 2) carbonates, and 3) bicarbonates. Below pH 8.3 all alkalinity is bicarbonate alkalinity. Below pH 4.5 all bicarbonate has been converted to carbonic acid H_2CO_3 (Sawyer & McCarty 1967. *Chemistry for Sanitary Engineers*, Page 329).

Every mg/L of NH_4-N oxidized causes the destruction of 7.14 mg/L of Alkalinity expressed as $CaCO_3$ (Metcalf & Eddy 3rd Edition 1991. *Wastewater Engineering*, Page 698). As *Nitrosomonas* bacteria oxidize ammonia to nitrite large quantities of alkalinity are converted to cellular carbon and carbonic acid. *Nitrobacter* bacteria use more alkalinity to oxidize nitrites to nitrates (Ibid., Page 431). Thus, for example, the oxidation of 40 mg/L of NH_4-N to 10 mg/L means that (30 mg/L x 7.14) 214.2 mg/L of alkalinity will be consumed. As the alkalinity in the aeration tank is consumed, the pH will drop and can approach pH 4.5. Nitrification bacteria are sensitive organisms and have a narrow optimal growth range between pH 7.5 and 8.6; however some acclimation to lower pH conditions can occur. Because pH is a log scale, a pH below 6.5 means that only $1/10^{th}$ of the alkalinity is available as at pH 7.5, thus almost no buffering capacity remains. As the pH drops the microbe growth environment and nitrifying capacity becomes limited, then constrained and finally nonfunctional. Lime addition to bring pH levels above pH 7.5 may be required to maintain robust denitrification.

3.4.4 ALKALINITY CONTROL and pH MEASURMENTS

Alkalinity will be measured and monitored with an alkalinity test kit and alkalinity trends will be more frequently monitored with pH meter measurements. Alkalinity at levels of greater than 50 mg/L is normally required and the degree of nitrate formation will be a guide. Monitoring alkalinity in aeration tanks and in the sludge digester provides important plant operation guidance, particularly when the discharge permit requires nitrogen removal. The ease with which pH measurements can be made suggests that they need to be made frequently throughout the process to monitor process alkalinity. Frequent alkalinity testing will be needed to check the correlation of alkalinity with the pH measurements. Alkalinity measurements will be best made in samples of the clear liquid above settled sludge.

Lime as needed for nitrification will be added to the aeration tank and the sludge digester to bring pH levels above 7.5 to provide for enable robust denitrification. Lime addition is easiest made by making a lime slurry then pouring it into the tank. **Personnel Safety Caution**; the maximum lime slurry mixing ratio is: No more than 1.0 pound of Lime is to be added for each 2.5 gallons of water!

[2] Nitrification process designation from "Process Design Manual for Nitrogen Control", U.S. EPA Technology Transfer, October 1975, pg. 4-1.

3.5 DENITRIFICATION PROCESS SUMMARY

The Santec denitrification process uses a modified denitrification system that uses methanol as the carbon source for nitrate reduction. Table 3.2 lists the design parameters. Detailed calculations for denitrification process design can be found in Section 2. The denitrification process includes an anoxic zone prior to aeration for additional removal of nitrate. The design of system utilizes the denitrification tank following aeration as the principal nitrogen removal zone with a safety factor of 2.0 on this zone. The primary purpose of the influent anoxic zone is the reduction in operating cost associated with the addition of methanol in the denitrification zone following aeration. The configuration is identical to the denitrification tank following aeration.

Table 3.2 DENITRIFICATION PROCESS DESIGN PARAMETER SUMMARY

PARAMETER	DESIGN VALUE	BULLETIN 11 STANDARD
ANOXIC DETENTION PERIOD (hrs)	3.7	NONE
DENITRIFICATION DETENTION PERIOD (hrs)	3.7	NONE
MLVSS	3000	1000-3000
LBS NO_3-N / 1000 CF (ft^3)	15.84/10.20	200
pH	7.2	6.5-7.5
METHANOL/ NO_3-N RATIO	3.0	3-4

3.5.1 BASIN CONFIGURATION

The Santec denitrification tank is provided in a horizontal, cylindrical, fiberglass tank constructed to the standards set forth in the tank specifications. The cylindrical design of the vessel provides smooth transitions from wall to floor, maintains good mixing throughout the tank, prevents solids deposition in the basin, and prevents the formation of "dead-zones" where little mixing occurs.

3.5.1.1 MIXING

Design liquid depth in the denitrification basin is 10'-10".

Airlift type mixers shall be installed to minimize short-circuiting and promote mixed liquor contact with the carbon source.

The configuration of the mixer (s) in the denitrification basin (oriented to tank wall) promotes circular mixing (around the circumference of the tank). The resulting spiral roll of the mixed liquor approximates plug flow through the tank, prevents short circuiting and provides excellent mixing.

Use of horizontal, cylindrical, fiberglass tanks with low length to width ratios is well documented in Arizona where Santec Corporation has installed approximately 50 similar facilities.

3.5.1.2 INLETS AND OUTLETS

The inlet to the denitrification zone shall be through the crossover stub located in the FRP tank baffle.

The outlet from the denitrification zone is through a gravity overflow pipe. This overflow pipe maintains a constant level in the zone.

The design of the denitrification zone incorporates a minimum 16-inch freeboard to the invert of the outlet overflow pipe. Additional freeboard shall be provided by the access manways at a

minimum of 1 foot 6 inches. The total freeboard of the denitrification zone shall be a minimum of 2 feet 6 inches.

3.5.2 RETURN SLUDGE AND WASTING

The design of the Flagstaff Meadows Site 2 facility shall include two mixed liquor return lines. The MLR passes mixed liquor from the reaeration tank to the denitrification zone following aeration and the NMLR in the final aeration section passes mixed liquor to the anoxic basin at the head of the process..

The mixed liquor return line (MLR) shall be fed by 3-inch airlifts and equipped with a slide gate valve at the pipe exit point in the denitrification zone for recycle on/fraction/off control.

Airlift calculations from "Centrifugal Compressor Engineering", (Hoffman Air & Filtration Division, December 1973, figure 11-6, page 257), show each 3" airlift capable of providing a minimum of 45 gpm of recycle flow at submergence above 40%.

A control valve in the Airlift control panel controls the mixed liquor recycle line.

3.6 REAERATION PROCESS SUMMARY

The process design incorporates a reaeration zone immediately following the denitrification zone. The design of the reaeration zone incorporates vigorous counter-current diffused air mixing to promote the release of nitrogen gas prior to secondary clarification. Complete design calculations for the reaeration zone can be found in Section 3.

3.6.1 BASIN CONFIGURATION

The reaeration volume shall be provided in a horizontal, cylindrical, fiberglass tank constructed to the standards set forth in the tank specifications. The cylindrical design of the vessel provides smooth transitions from wall to floor to prevent the formation of "dead-zones" where little mixing occurs and prevents solids deposition in the basin.

The reaeration zone occupies the influent half of the tank in which the denitrification zone is constructed. Separation between reaeration and denitrification zone shall be maintained by Fiberglass Reinforce Plastic (FRP) baffles.

3.6.1.1 MIXING

Design liquid depth of mixed liquor in the reaeration zone is 10 feet and 0 inches.

Coarse bubble diffusers shall be utilized in the reaeration basin for mixing and degassing dissolved nitrogen from the mixed liquor passing from denitrification tank.

A minimum of 1 diffuser per 2.5 feet of tank length shall be installed. Each diffuser header shall contain a flow control valve for regulating the air supply to the diffusers.

3.6.1.2 INLETS AND OUTLETS

Reareation Inlet - The inlet to the reaeration zone shall be through the gravity overflow pipe from the denitrification zone.

Reareation Outlet - The reaeration zone outlet shall be underflow to the secondary clarifier which operates in an up flow mode.

The design of the reaeration zone incorporates a minimum 14-inch freeboard from the invert of the gravity outlet pipe to the top of the tank. Additional freeboard shall be provided by the access manways at a minimum of 1 foot 6 inches. The total freeboard of the reaeration zone shall be a minimum of 2 feet 6 inches.

3.6.2 MIXED LIQUOR RETURN AND WASTING

The design of the Flagstaff Meadows Site 2 facility shall include one mixed liquor return line outlet to the denitrification basin.
Each access manway of the reaeration zone shall contain one 3-inch airlift pump designated as a mixed liquor airlift pump.

3.7 SECONDARY CLARIFIER SUMMARY

The process design incorporates secondary clarification following the reaeration zone. Design parameters are listed in Table 3.3 and complete design calculations for the secondary clarifier can be found in Section 2.

Table 3.3 SECONDARY CLARIFIER DESIGN PARAMTER SUMMARY

PARAMETER	DESIGN VALUE	BULLETIN 11 STANDARD
DETENTION PERIOD (hours)	3.2	4.0
WEIR LOADING RATE (gpd/linear ft)	2,239	3,750
SURFACE LOADING RATE (gpd/ft^2)	476	493

The secondary clarifier shall be provided in a horizontal, cylindrical, fiberglass tank constructed to the standards set forth in the tank specifications. The cylindrical design of the vessel provides smooth transitions from wall to floor to prevent the formation of "dead-zones" where solids can accumulate in the basin.

The secondary clarifier occupies the outlet half of the tank in which the secondary clarifier is constructed. A longitudinal Fiberglass Reinforce Plastic (FRP) baffle shall maintain separation between reaeration and secondary clarification.

3.7.1.1 INLET STRUCTURE

The inlet to the secondary clarifier shall be underflow from the reaeration zone.

The complete mix design of the reaeration zone distributes solids uniformly along the length of the basin. The design of the underflow from the reaeration zone provides the entire length of the basin for inlet to the secondary clarifier minimizing inlet turbulence.

3.7.1.2 WIDTH TO LENGTH

The widths of the clarifier are the distances that define the water surface area in the clarifier. These are the longitudinal length of the tank, and the distance at the water surface level from the clarifier baffle to the tank wall.

The length of the clarifier is the distance the flow travels through it. Since flow occurs near the tank wall in a direction around the circumference of the tank, the length of the clarifier is approximately equal to ½ the circumference of the tank. This makes the clarifier much wider than long. Minimizing the clarifier length simplifies sludge collection by centralizing it in small zones across the width of the unit.

3.7.1.3 WEIR AND SCUM BAFFLES

The overflow weir in the secondary clarifier shall be of adjustable, V-notch design. The design of the weir shall incorporate a 12-inch scum baffle to minimize solids carry over in the effluent.

3.7.1.4 SLUDGE REMOVAL

The bottom of the clarifier is configured in a V-shape that extends the full width of the clarifier. Settling solids are carried to the center of the V-shape by gravity and by the continuous exit recycle flow of the airlift pump.

Multiple airlifts, designated return sludge airlift pumps, are placed in each access manway across the full width of the unit. Using multiple airlifts increases the efficiency of solids collection and removal.

3.7.1.5 SKIMMING REQUIREMENTS AND CONTROLS

The design of the facility shall include one skimmer waste line to the sludge holding tank.

Each access manway of the secondary clarifier shall contain one 3-inch airlift designated as a skimmer airlift. Each skimmer airlift will contain an individual airlift control valve for control of the skimming rate.

3.8 DISINFECTION AND DECHLORINATION

The design of the facility shall include chlorine disinfection for inactivation of *coliform* bacteria in the effluent. Disinfection design factors are provided in Table 3.4.

Table 3.4 DISINFECTION DESIGN PARAMTER SUMMARY

PARAMETER	DESIGN VALUE	BULLETIN 11 STANDARD
DETENTION PERIOD (hrs)	.25	.25
CHLORINE DOSAGE (mg/l)	8.0	8
FLOW PEAK FACTOR[1]	2.5	

[1] Maximum capacity of both flow equalization pumps.

3.8.1 DISINFECTION CHEMICAL FEED EQUIPMENT

A chlorine feed pump with liquid chlorine solution shall be used to accomplish effluent disinfection. The feed pump shall have a rated capacity of twice the anticipated chlorine dosage required.

3.8.2 CONTACT BASIN DESIGN

The basin design shall include over-under type baffling to prevent short-circuiting of the contact basin. Dewatering of the contact basin, when required, shall be accomplished by use of a portable, submersible dewatering pump.

3.8.3 DECHLORINATION CHEMICAL FEED EQUIPMENT

A dechlorination tablet feeder shall be installed on the gravity overflow outlet line from the chlorine contact basin to accomplish dechlorination of the effluent. The tablet feeder shall be a flow rated proportional feeder that allows for long-term unattended operation while providing a stable, adjustable chemical dose. Treatment of the wastewater effluent shall be accomplished by immersion of feed tubes containing vertically stacked chemical tablets. Chemical agents shall be released as the liquid erodes the tablets. The tablet feeder shall be equipped with a self-draining flow channel to allow

complete dry down of the chemical tablets during low and/or no flow conditions to ensure long-term tablet integrity.

3.9 CONTAINMENT STRUCTURES

All containment structures including tanks, vessels, connections and piping containing raw or treated wastewater or effluent shall be watertight during normal operation.

4 CONSTRUCTION MANAGEMENT

4.1 INTRODUCTION:

For most endeavors, project goals and objectives can only partially be defined by contract language. The key to success rests in good faith agreements between all parties to create an environment of mutual respect and trust, and to foster a teamwork approach. These Construction Administration Procedures have been developed to enhance communication among the project team. These procedures provide guidelines to be followed, but do not address all the requirements of the contract documents, nor take precedence over the contract documents.

4.2 PROJECT TEAM:

The project team consists of the following:

	OWNER	WWTP PROJECT ENGINEER	FACILITY SUPPLIER
NAME:	Utility Source L.L.C.	Santec Corporation	Santec Corporation
CONTACT:	Lonnie McCleve	Daniel Dow, P.E.	Dwight Zemp, V.P.
PHONE:	480.892.8756	303.660.9211 ext. 15	303.888.4977
FAX:	480.892.3387	303.660.2180	303.660.2180
EMAIL:		ddow@santeccorporation.com	dzemp@santeccorporation.com
MAILING ADDRESS:			
PHYSICAL ADDRESS:	721 E. San Pedro	220 Malibu Street	220 Malibu Street
CITY / STATE / ZIP:	Gilbert, AZ 85234	Castle Rock, CO 80109	Castle Rock, CO 80109

4.3 COMMUNICATION AND CORRESPONDANCE:

During the performance of daily activities, the contractor may find it necessary to have discussions and brief meetings with the construction teams. In the overall spirit of teamwork, the contractor will be expected to maintain appropriate records of the discussions and meetings.

4.4 SPECIAL MEETINGS:

As required by job conditions, special meetings may be called by the project manager, or may be requested by the contractor to discuss any particular problem or situation that may arise. The contractor will attend all meetings when requested.

4.5 SUBMITTAL PROCEDURES:

All shop drawings, qualifications, certifications, specifications, installation instructions, and other technical information required by the contract are to be submitted to the appropriate authorities.

4.6 QUALITY CONTROL

4.6.1 INSTALLATION QUALITY CONTROL

Installation contractor shall monitor and maintain quality control over suppliers, subcontractors, work force, site conditions, products and services to ensure work is of specified, consistent quality.

4.6.1.1 WORKMANSHIP

Specified requirements represent a minimum, acceptable quality for Work.

Perform work with suitable qualified personnel to produce work of specified quality

Secure products in place with positive anchorage devices designed and sized to withstand stresses, vibrations and distortion

4.6.1.2 MANUFACTURER'S INSTRUCTIONS

Comply fully with manufacturer's instructions. Perform steps in manufacturer's recommended sequence.

Should instructions conflict with contract documents, request clarification from manufacturer before proceeding.

4.7 SAFETY PLAN:

The responsibility of safety lies solely with the contractor. The contractor shall be required to comply with the safety program and all applicable federal, state, and local regulation codes, rules, laws and ordinances. The safety plan shall include, but is not limited to the following: safety and health orientation, enforcement policy, disciplinary action for non-compliance, job site safety pre-planning, emergency safety plan, accident reporting, basic safe practices, ladder safety, confined spaces, fire prevention and site security.

4.8 CONFLICT RESOLUTION:

If the contractor believes there is a conflict between elements of the contract documents, he should identify the conflict and request direction by the RFI process. After the owner has reviewed and responded to the request for information, he will transmit two copies to the contractor. If the contractor believes a written clarification or interpretation justifies an increase in the contract price, or contract time, he may make a request for change.

4.9 CONTRACTOR'S ON-SITE WORK:

The contractor will be responsible for the following work. Excavation for all tankage is shown on the plant layout drawings. All tank tie-down straps and dead men for tank anchoring. Supply and place pea gravel bed under tankage. Unload and place all tankage at elevations shown on the hydraulic profile. Supply and install all crossover piping located between tankage, including inlet and outfall lines. Backfill around tanks with pea gravel to a level just below the tank manway collars. Supply fuel storage tank and line to generator if needed. Construct concrete footers for site building as needed. Provide clean water fill for the tanks at the time of placement. Provide primary electrical power and installation of the power to the site building and each Santec control panel.

Owner furnished equipment and facilities:
Service entrance to building and any other electrical power required. Telephone service to the site building. Potable water to the site building. All required fencing and signage around the wastewater treatment plant. Landscaping around the facility. Access road to the plant site, operations and control building and sludge holding tank.

4.10 CONSTRUCTION CHECK POINTS:

At the following points checks will be made to insure installation of plant adheres to installation procedures and guidelines.
Elevations in excavation before tanks are set.
Depth of pea gravel bed
Elevations after tanks are set.
Tank tie-down and chocks
Back fill of tanks
Hydrostatic testing of tanks

4.11 START-UP:

The contractor shall initially start-up and place all equipment installed by him into successful operation according to manufacture's written instructions. A qualified manufacturer's representative, who shall certify same on the appropriate equipment start-up and training form, must verify proper checkout and start-up.

4.12 FINAL CLEANUP:

Prior to final inspection as provided for herein the contractor shall clean the entire work site.

5 SYSTEM START-UP

5.1 PRE-OPERATIONAL TESTING

5.1.1 TREATMENT PLANT CONTAINMENT VESSELS

All tanks and containment vessels shall be hydrostatic tested over a 24-hour period utilizing non-potable water.

Tanks shall be tested following installation and connection to ensure the integrity of the tanks and connections.

All connections and tanks shall be watertight during normal operation.

Tank and connection testing shall consist of two tank water level measurements taken at 24-hour intervals.

5.1.2 TREATMENT FACILITY PIPING

Gravity overflow connections shall be hydrostatic tested concurrently with hydrostatic testing of treatment plant containment vessels.

Pressurized piping shall be leak tested utilizing non-potable water.

All connections and piping shall be watertight during normal operation.

5.1.3 MECHANICAL EQUIPMENT

All mechanical equipment lubrication, connection and installation shall be verified prior to mechanical equipment start-up.

Nameplate data shall be recorded on forms provided by the equipment supplier.

5.1.4 ELECTRICAL EQUIPMENT

All electrical equipment including motors, control panels and distribution panels shall be inspected to ensure proper connection prior to start-up.

Controls panels shall be tested for proper operation by the panel manufacturer prior to installation.

All motors including pump and blower motors shall be monitored during pre-operational testing to ensure operation consistent with manufacturer's nameplate loads.

Back-up power start-up shall be conducted by an authorized representative of the equipment supplier.

5.2 FACILITY START-UP FOR BATCH OPERATION

Wastewater treatment facilities providing service to new developments typically experience large fluctuations in the incoming wastewater flow rate until the development is over 20% constructed. During the initial construction of the development, low flows typically less than 25% of the design average daily flows are anticipated. Treatment of the waste stream prior to full-start up of the facility is accomplished by operating the flow equalization basin in a batch operation mode. Operating the treatment facility in this fashion provides treatment of all sewer flows from the onset of the project while minimizing the cost of plant operations.

The following sequence illustrates operation of the basin in the batch operation mode:

1. Incoming flow is received from the collection system in the aerated flow equalization basin.

2. Incoming flows are stored in the equalization basin until a pre-set level is reached.
3. When the pre-set level is reached, the auto-dialer will notify the operator of the facility.
4. The operator will interrupt the aeration cycle and allow the solids to settle to the bottom of the basin.
5. Utilizing the flow equalization pumps, the operator will decant the supernatant into the head of the aeration basin.
6. Aeration to the equalization basin and treatment process is restarted.
7. As the flow goes through the plant, further treatment and clarification will occur with the alternating aeration and settling cycles prior to discharge from the secondary clarifier.

Treatment systems that require nitrogen removal can be operated in alternating aerobic and anoxic conditions in the equalization basin. This mode utilizes the incoming sewage flow as a carbon source during anoxic cycles.

5.3 FACILITY START-UP FOR CONTINUOUS OPERATION

Full-scale operation of the treatment facility is typically conducted when the average daily flow to the treatment facility is 25% of the design average daily flow. Batch treatment of the waste is discontinued and continuous flow operation commences.

The design of the facility incorporates several features for operation of the facility at average daily flows significantly less than design flow.

1. The flow equalization basin incorporates a flow control system to maintain continuous flow to the aeration process.
2. The pump discharge feed line from the flow equalization basin can be directed to one of several points in the aeration tank to process the wastewater at the best food to micro organism ratio. Typically start-up is conducted with the feed from the flow equalization basin discharging in the final 1/3 of the aeration basin.
3. When the hydraulic detention time in aeration is less than 18 hours, the feed line from the flow equalization basin is diverted to the next upstream feed point.

5.4 EFFLUENT CHARACTERISTICS DURING START-UP

5.4.1 BOD_5

During start-up, effluent BOD_5 is typically in compliance with permit limits. Continuous flow and high food to micro organism ratios facilitate rapid biomass growth and subsequent removal of the organic substrate.

5.4.2 TSS

During start-up, effluent TSS typically requires 5-10 days to be in compliance with permit limits. Sufficient biomass and sludge age must be developed to provide proper flocculation and settling the clarifier for removal of suspended solids.

5.4.3 pH

During start-up, effluent pH is typically in compliance with permit limits.

5.4.4 FECAL COLIFORM

During start-up, effluent Fecal Coliform levels are typically in compliance with permit limits.

5.4.5 TOTAL NITROGEN

During start-up, effluent Total Nitrogen levels typically require 30-60 days to develop the microbial populations to maintain discharge permit limits.

5.5 TIME FRAME FOR MEETING PERFORMANCE REQUIREMENTS

Continuous start-up of the facility typically requires *60 days* or less to develop the mixed liquor concentrations and microbial populations appropriate for the influent loading.

Effluent typically requires *60 days* or less to meet performance requirements.

6 PLANNED, NORMAL OPERATION

Please refer to the Flow Process Diagram (Plan sheet #3, Section 3) for references in this section.

6.1 FLOW EQUALIZATION

Raw wastewater is received from the collection system in Manway Number 1 (FEQ#1). This manway is located on the Flow Equalization Basin (FEQ).

6.1.1 FLOW EQUALIZATION

The FEQ is continuously aerated to maintain a complex mix of the basin contents and prevent septic conditions from creating odors. The completely mixed wastewater in the basin is pumped to aeration.

6.2 AERATION

The pump discharge pipe line discharges through one of four Process Feed Valves (PFV). The PFV are slide gate valves (PF-1 to PF-4) and are located in the manways of the aeration tank and on the ends of branches of the pump discharge pipeline. Raw sewage flow passes through the pump discharge pipeline to the aeration tank through one of three slide gate valves (PF-1 thru PF-2). The slide gate valves are set at OPEN/CLOSED to direct where in the aeration tank the feed is to enter. They are not be used to control the pump discharge rate to the aeration tank.

During normal operation at the design average daily flow rate, PF-1 (ANX#1) is open and PF-2 through PF-4 are closed. This directs the incoming waste stream to the anoxic tank ahead of the aeration tanks.

6.2.1 ANOXIC

The anoxic tank receives Nitrified Mixed Liquor (NMLR from the end of aeration). The anoxic basin is designed to remove the readily soluble portion of the waste stream, promote new biomass growth and operate as an aerobic selector. Utilizing the anoxic tank in this fashion helps balance the oxygen demand at the point of RAS(return activated sludge) return.

Dissolved Oxygen (D.O.) levels should be maintained less than .25 mg/l in the anoxic tanks.

6.2.2 AERATION

As flow passes through the anoxic tank and into the remainder of the aeration process, RAS is returned to AER #1 through slide gate valve RA-1; RA for Return Activated Sludge. RA-1 should be used for ON/OFF control of the recycle only and should not be used to control the recycle rate. Slide gate valve RA-3 opens in the sludge holding tank to enable wasting Return Activated Sludge when needed; RA-2 should be closed during normal operation. The Airlift Recycle Valve No. 1 (RET-2) is a gate valve and is available to adjust the air flow to the airlift pump to control the RAS recycle rate.

D.O. levels should be maintained at 1.5 to 2.0 mg/L. Excessive aeration and D.O. levels should be minimized to promote low D.O. in the denitrification process.

6.3 DENITRIFICATION

Flow passes from the aeration tank and into the anoxic Denitrification basin. MLR is returned to DEN#1 through slide gate valve ML-2; ML for Mixed Liquor Return. ML-2 should be used for ON/OFF control of the recycle only and should not be used to control the recycle rate. Valve ML-3 is available to waste Mixed Liquor Return to the sludge holding tank and should be closed during normal operation. The Airlift Recycle No. 2 (RET-1) is a gate valve and is available to adjust the air flow to the airlift pump to control the MLR recycle rate.

Airlift type mixers are located in the DEN manways to promote mixing in denitrification. The external carbon source (typically methanol) for denitrification is fed directly into the top of the mixer. The mixers should discharge 1 to 2 inches above the static level in the basin to minimize oxygen entrainment in the anoxic tank from the airlift mixer.

D.O. should not be present in the denitrification basin. If D.O. in excess of .25 mg/l is present, Air Control Valve, AG-5 should be closed to reduce the D.O. at the end of the aeration process.

The methanol feed rate can be adjusted with the methanol feed pump located at the methanol storage location (often near the blowers).

Flow exits the anoxic denitrification tank through the 6-inch gravity overflow line.

6.4 REAERATION

Flow enters reaeration through the 6-inch gravity overflow line from the denitrification anoxic basin. Sufficient aeration should be maintained in the reaeration basin to achieve complete mixing. Air Control Valve, AG-6 is available for use to control mixing in reaeration.

Airlifts located in reaeration basin, designated Mixed Liquor Recycle airlifts, pump MLR and discharge it into the denitrification basin.

6.5 SECONDARY CLARIFIER

Surface skimmers are located in each clarifier for the removal of scum from the surface of the clarifier.

The effluent weir is of an adjustable, V-notch design which allows for collection across the entire length of the clarifier.

Flow passes out of the effluent weir through a 6-inch gravity effluent line.

7 OPERATION AND MAINTENANCE MANUAL OUTLINE

TABLE OF CONTENTS OPERATIONS AND MAINTENANCE MANUAL

SECTION 1 - GENERAL INFORMATION

A. Contact Information
B. Treatment plant layout
   1. Flow Equalization Basin
   2. Aeration
   3. Denitrification
   4. Clarifier
   5. Disinfection
   6. Dechlorination
   7. Sludge Holding Tank
C. Design Criteria and System Efficiency
D. Safety Procedures
E. Recommended Operations Equipment
F. Spare Parts List
G. Process Troubleshooting FAQ
H. Emergency Operating Procedure

SECTION 2 - TREATMENT PROCESS DESCRIPTION

A. Definitions
B. Plant Equipment and Operation
   1. Comminutor
   2. Lift Station
   3. Sewage Screening
   4. Flow Equalization
   5. Flow Metering
   6. Anoxic Reactor
   7. Reactor #1
   8. Reactor #2
   9. Reactor #3
   10. Reactor #4
   11. Denitrification
   12. Reaeration
   13. Clarifier
   14. Sludge Holding Tank
   15. Sand Filter
   16. Chlorination
   17. UV Disinfection
   18. Diffusers
   19. Blowers/ Motors

SECTION 3 – DAILY OPERATIONS

A. Facility Walk-thru
B. Sampling
C. Settleometer
D. Skimming
E. Laboratory Process Control

SECTION 4 – RECORDS KEEPING

A. Daily Process Control Worksheet
B. Maintenance Schedule
   For Equipment Maintenance Procedures see Equipment Data Manual

SECTION 5 – FACILITY DRAWINGS

8 METHOD OF DISPOSAL

8.1 EFFLUENT DISPOSAL

The proposed method of effluent disposal is discharge to the existing reuse system combined with discharge under the existing NPDES permit. The existing facility is permitted for up to 150,000 gpd of reuse and up to 150,000 gpd of NPDES discharge. With expanded treatment facilities of 300,000 gpd in aggregate and existing discharge capability of 300,000 gpd of combined reuse and discharge no additional means of effluent disposal are required.

8.2 SLUDGE MANAGEMENT

Waste activated sludge will be transferred from the treatment process to the sludge holding tank for further treatment and concentration prior to on-site dewatering. Final disposal will be accomplished by hauling of liquid waste sludge to an approved disposal location.

Estimated solids production is summarized below for various average daily flow volumes from 25% to 100% of average daily design flow volume.

Table 8.1

ESTIMATED WASTE SLUDGE AT VARIOUS AVERAGE DAILY FLOWS

Average Daily Flow Volume (gpd)	Estimated Waste Sludge Volume (gallons)	Net Waste Activated Sludge (pounds/day)
40,000	712	23.8
75,000	1335	44.6
115,000	2046	68.3
150,000	2669	89.1

9 CONTINGENCY AND EMERGENCY OPERATION

VIOLATION OF A PERMIT CONDITION (MECHANICAL)

The permit conditions contained in this section are defined as facility operational and inspection items for which violation does not automatically result in exceedence of discharge limits, alert levels, violation of an Aquifer Water Quality Standard or an eminent or substantial endangerment to the public health or the environment. These items generally relate to maintenance of specific equipment items and/ or treatment process units.

Table 9.1 TREATMENT FACILITY MECHANICAL INTEGRITY

Pollution Control Structure/ Parameter	**Performance Level**	**Inspection Frequency**
Pump Integrity	Good working condition	Weekly
Treatment Plant Vessels	No visible cracks or leakage	Weekly
Blower Integrity	Good working condition	Weekly
Treatment Plant Flow Meters	Good working condition	Weekly
Telemetry/ Alarm Devices	Good working condition	Monthly

CORRECTIVE ACTION

For operational levels exceeded in Table 9-1 above for mechanical equipment with duplicity:

9.1 COMMINUTOR

Bypass comminutor unit utilizing bypass valves (CB#1, CB#2). Manually cleaned bar screen serves as back-up for screening of large solids. Operation in this fashion can be conducted indefinitely until comminutor unit can be repaired or replaced.

9.2 PUMPING SYSTEMS

Pump packages are of full duplex configuration. A failed pump should be immediately repaired or replaced. During the interim period, the remaining, working pump should be utilized. Should two pumps fail during a single repair period, the flow equalization pumps and filter equalization pumps can be interchanged with corresponding adjustments to rate control for emergency operation.

Air pumps (blower package) can be operated in the same fashion as the liquid pumps.

9.3 CONTROL SYSTEMS

Control panels are provided with Hand/ Off Auto switches for operation. Should control failure exist, the equipment can be operated in hand position, bypassing automatic control of the system. Control panel should be diagnosed and repaired immediately.

9.4 FLOW METERING

The WWTP is provided with one magnetic flow meter on the pumped line from the flow equalization basin (flow monitoring point). Failed meters should be diagnosed and repaired immediately.

As an extreme contingency should the flow meter fail, operators can measure the pumping rate from the flow equalization basin utilizing a bucket and stopwatch and utilize pump run times to calculate the average daily flow.

9.5 MONITORING EQUIPMENT

Monitoring equipment such as pH and D.O. probes are provided thru various means. Operators are provided with submersible probes for monitoring these parameters in the most time efficient manner. Should the submersible probes fail, operators are also provided with colorimetric means of evaluating these parameters.

1. Initiate equipment repair procedure by one of the following:
    a. Replacement Parts
    b. Off-site unit repair
    c. Unit replacement
2. For pump equipment, ensure emergency equipment is available for usage until repair/ replacement is completed.

For operational levels exceeded in Table 9-1 for mechanical equipment without duplicity:

1. Initiate emergency operational procedures including:
    a. Standby pumping
    b. High level overflow to aeration reactors
    c. Contact equipment supplier for immediate replacement
2. For treatment plant vessel integrity.
    a. Contain the spill.
    b. Repair the damaged area
    c. Clean-up of the affected area
3. Notify the ADEQ Water Quality Compliance Unit within 5 days of becoming aware of a violation of any permit condition having been exceeded.
4. Submit a written report within 30 days of becoming aware of the violation of a permit condition having been exceeded or of a spill.

VIOLATION OF A PERMIT CONDITION (GROUND WATER QUALITY)

The permit conditions contained in this section are, if exceeded, violations of the Aquifer Water Quality Standard or alert levels specified in the Ground Water monitoring plan required for this permit with samples taken from the point of compliance.

Table 9.2

VIOLATION OF PERMIT CONDITION AT GROUND WATER MONITORING LOCATION

Pollution Control Structure/ Parameter	**Performance Level**	**Sampling Frequency**
Total Nitrogen	10.0 mg/l	Monthly
Nitrate-Nitrate as N	10.0 mg/l	Monthly
TKN	Reserved	Monthly
Fecal Coliform	<200 CFU per 100 ml	Monthly

CORRECTIVE ACTION

For levels exceeded at the groundwater monitoring point of compliance:

1. Verification sampling at the point of compliance.
2. Discharge monitoring sampling to establish effluent standard. If discharge complies with permit standards, no additional action to be taken.
3. Further monitoring and institution of operational procedures to control effluent quality.

VIOLATION OF DISCHARGE LIMITATION

The permit conditions contained in this section are violations, if exceeded, of the discharge limitations as monitored at the effluent sampling location.

Table 9.3

VIOLATION OF PERMIT CONDITION AT EFFLUENT SAMPLING LOCATION

Pollution Control Structure/ Parameter	**Performance Level**	**Sampling Frequency**
Flow: Average Monthly	.150 MGD	Daily
BOD_5 (30 day average)	30 mg/l	Weekly
BOD_5 (7 day average)	45 mg/l	Weekly
TSS (30 day average)	30 mg/l	Weekly
TSS (7 day average)	45 mg/l	Weekly
pH	6-9	Weekly
Fecal Coliform (Max)	<800 CFU	Daily
Fecal Coliform (7 sample median)	<200 CFU	Daily
Total Nitrogen	10.0 mg/l	Weekly
Nitrate-Nitrite as N	10.0 mg/l	Monthly
TKN	10.0 mg/l	Monthly

CORRECTIVE ACTION

For levels exceeded at the discharge monitoring location/ effluent sampling location:

1. Verification Sampling
2. Further monitoring to include institution of operational procedures to control effluent quality.
3. Notify the ADEQ Water Quality Compliance Unit within 5 days of becoming aware of a violation of any permit condition having been exceeded.
4. Submit a written report within 30 days of becoming aware of the violation of a permit condition having been exceeded or notice of a spill.

IMMINENT AND SUBSTANTIAL DANGER TO PUBLIC HEALTH

If an imminent and substantial endangerment to the public health or environment exists, the following actions shall be taken:

CORRECTIVE ACTION

1. Immediate cessation of discharge by:
    a. Utilization of all available storage capacity including on-site storage ponds
    b. Emergency pumping
2. Mitigation measures to limit the impact of pollutants on existing uses of the aquifer.

24-HOUR EMERGENCY RESPONSE MEASURES

The primary emergency for a continuous flow wastewater treatment facility treating primarily domestic wastewater is interruption of service to mechanical equipment. Preventive Maintenance Procedures as summarized in Table 8-1 provide the protection to mechanical failure along with normal maintenance procedures.

CORRECTIVE ACTION

Should conditions exist for whatever reason at the WWTP which cause the effluent to be classified as an imminent and substantial danger to public health, the following sequence shall be utilized.

1. Immediate cessation of discharge
2. Utilization of existing storage capacity in flow equalization basin and sludge holding tank
3. Vault and Haul of raw sewage from flow equalization basin as possible.
4. Notify the ADEQ Water Quality Compliance Unit immediately regarding emergency response measures taken.
5. Submit a written report within 30 days of becoming aware of the violation of a permit condition having been exceeded or notice of a spill.

EMERGENCY RESPONSE COORDINATOR

Name of Operator: **Pat Carpenter**
Operator Mailing Address:

Phone: **928-606-0498**
Fax:
Operator:

10 CLOSURE PLAN

The design of the facility is for temporary operation; when the facility is decommissioned, the facility equipment is designed to be completely removable from the site, and the site re-mediated with no further monitoring required.

10.1 MATERIALS TO BE REMOVED FROM SITE

10.1.1 PROCESS WATER, MIXED LIQUOR, WASTE SLUDGE

All process water, mixed liquor and sludge will be removed by an approved sludge hauler to the same location as the waste sludge. Process tankage will be cleaned and rinsed utilizing non-potable water to minimize vector attraction.

10.1.2 TANKS VESSELS AND MECHANICAL EQUIPMENT

All process tanks, vessels, mechanical equipment and piping will be removed from the site and transported to an appropriate storage area. Should the facility not be reclaimed or reused, the cleaned process tanks and vessels can be crushed for removal to an appropriate landfill facility.

10.2 POST CLOSURE MONITORING

All facility material will be removed from the site prior to final closure of the facility. The site will likely be graded, landscaped and reclaimed for appropriate usage. No post closure monitoring is required as a result of WWTP closure.

11 COST ESTIMATES

Line Item	Estimated Cost	Responsible Entity
Phase 1 Items		
Facility Equipment	$673,940.00	Utility Source L.L.C.
Facility Construction & Installation	$70,000.00	Utility Source L.L.C.
Operation & Maintenance	$49,472/ yr	Utility Source L.L.C.
Facility Decomissioning	$40,000.00	Utility Source L.L.C.
Post Closure Monitoring[1]	--------	Utility Source L.L.C.
Phase 2 Items		
Facility Equipment	$438,711.00	Utility Source L.L.C.
Facility Construction & Installation	$70,000.00	Utility Source L.L.C.
Operation & Maintenance Phase 1&2	$87,479/ yr	Utility Source L.L.C.
Facility Decomissioning	$40,000.00	Utility Source L.L.C.
Post Closure Monitoring[2]	--------	Utility Source L.L.C.

[1] Per closure plan all materials to be removed from site and site remediated
[2] Per closure plan all materials to be removed from site and site remediated

2

TABLE OF CONTENTS SECTION 2

Flagstaff Meadows Site 2

TREATMENT PLANT DESIGN REPORT AND SUBMITTAL

PHASE 1 CALCULATIONS (75,000 GPD)

Design Summary	1
Flow EQ	4
BOD Removal	7
Clarification	8
Reaeration	9
Nitrification	10
Influent Denite	11
Denitrification	12
Sludge	14
Disinfection	16
Effluent Lift Station	17
Aeration	20
Blower Sizing Calculations	
Generator Sizing Calculations	

DESIGN SUMMARY
FOR SECONDARY TREATMENT PROCESS
INCLUDING NUTRIENT REMOVAL

PROJECT NAME:	Flagstaff Meadows Site 2		
PROJECT LOCATION:	BELLEMONT, ARIZONA		
DATE:	9/29/2005		
PREPARED BY:	NAW		
INFLUENT LOADING PARAMETERS:			
		English	
HYDRAULIC LOADING PARAMETERS		Units	
Design Average Daily Flow *gpd*		75,000	
Design Maximum Day Flow *gpd*		93,750	
Design Peak Hourly Flow *gph*		12,116	
ORGANIC AND MASS LOADING PARAMETERS			
Design influent BOD_5 *ppm*		220.0	
Design influent BOD_5 *lbs/day*		137.4	
Design influent TSS *ppm*		220.0	
Design influent TSS *lbs/day*		137.4	
Design influent NH_3 *ppm*		39.6	
Design influent NH_3 *lbs/day*		24.7	
EFFLUENT PARAMETERS:			
Design effluent BOD_5 *ppm*		30.0	
Design effluent BOD_5 *lbs/day*		18.7	
Design effluent TSS *ppm*		30.0	
Design effluent TSS *lbs/day*		18.7	
Design effluent Total Nitrogen *ppm*		10.0	
Design effluent Total Nitrogen *lbs/day*		6.2	
Fecal Coliform Concentration *cfu/100ml*		<2.2	
TREATMENT UNIT PROCESSES:			
FLOW EQUALIZATION			
Working Volume *gal*		19,532	
Minimum pumping rate *gpm*		13.0	
Maximum pumping rate *gpm*		65.1	
Average pumping rate *gpm*		52.1	

AERATION	
Design Aeration Detention Time *hrs*	17.4
Working Volume *gal*	54,264
Design MLSS concentration *ppm*	4,000
Aeration Tank Loading *lbs BOD_5/ 1000 ft^3*	18.9
Aeration Tank Loading *lbs BOD_5/ lb MLSS*	0.099
Aeration Tank Loading *lbs solids/ lb BOD_5 removed*	11.6
Aeration Oxygen Requirement *lbs O_2/ lb peak hourly BOD_5*	1.5
Aeration Oxygen Requirement *lbs O_2/ day*	258
NITRIFICATION	
Detention Time in Nitrification Zone *hrs*	17.4
Nitrification Zone Working Volume *gal*	54,264
Design Nitrification Temperature *F°*	68
Design MLVSS concentration *ppm*	3,000
Nitrification Oxygen Requirement *lbs O_2/ lb NH_3*	4.6
Nitrification Oxygen Requirement *lbs O_2/ day*	114
Nitrification Safety Factor	5.3
DENITRIFICATION (INFLUENT ANOXIC)	
Detention Time in Denitrification Zone *hrs*	1.9
Denitrification Zone Working Volume *gal*	11,680
Design Denitrification Temperature *F°*	68
Design MLVSS concentration *ppm*	3,000
Nitrate Removal Rate *lbs NO_3 removed/ lb VSS/day*	0.06
Effluent Nitrate concentration *ppm*	25.5
DENITRIFICATION (SECONDARY ANOXIC)	
Detention Time in Denitrification Zone *hrs*	3.7
Denitrification Zone Working Volume *gal*	11,680
Denitrification Temperature *F°*	68
Design MLVSS concentration *ppm*	3,000
Nitrate Removal Rate *lbs NO_3 removed/ lb VSS/day*	0.125
Design Solids Retention Time *days*	16.7
Methanol/ Nitrate Nitrogen Ratio	3.0
Effluent Nitrate concentration *ppm*	0.3
REAERATION	
Detention Time in Reaeration Zone *hrs*	2.4
Reaeration Zone Working Volume *gal*	7,403
Aeration and Mixing *scfm*	150

SECONDARY CLARIFICATION			
Detention Time in Clarifier ***hrs***		3.3	
Clarifier Working Volume ***gal***		10,419	
Clarifier Surface Loading ***gpd/ ft²***		481	
Clarifier Sidewater Depth ***ft***		8	
Weir Loading rate ***gpd/ ft***		2,239	
Sludge Removal Ratio		150%	
SOLIDS MANAGEMENT			
Sludge Holding Tank Working Volume ***gal***		22,736	
Holding Tank Solids Mean Cell Residence Time ***days***		40	
Net Waste Activated Sludge ***lbs/day***		89	
Net Waste Activated Sludge Volume ***gal/day***		2,669	

	A	B	C	D
1				
2	**SANTEC DESIGN CALCULATIONS**			
3	**FOR FLOW EQUALIZATION**			
4				
5				
6	**PROJECT NAME:**	**Flagstaff Meadows Site 2**		
7	**PROJECT LOCATION:**	**BELLEMONT, ARIZONA**		
8	**DATE:**	**9/29/2005**		
9	**PREPARED BY:**	**NAW**		
10				
11	**CALCULATION OF PEAK FACTOR:**			
12	**BASED ON POPULATION ESTIMATES**			
13	**AND RECOMMENDED STANDARDS FOR WASTEWATER FACILITIES**			
14			English	Metric
15			Units	Units
16	Q_{design} = Average Daily Sewage Flow *gpd (m^3/day)*		75,000	284
17	Projected wastewater Generation rate *gpd/capita (m^3/day/capita)*		100	0.38
18	Population served by Flow Equalization *(capita)*		750	
19	Peak factor = Q_{peak}/Q_{design} = [18 + SQRT(P)] / [4 + SQRT(P)]		3.877	
20	where P= Estimated population in thousands			
21	Q_{peak} = Maximum Rate of Sewage Flow (Peak Hourly Flow) *gph (m^3/hr)*		12,116	46
22				
23	**CALCULATION OF REQUIRED STORAGE VOLUME:**			
24	Peak factor chosen by Santec		3.88	
25	Average Daily Sewage Flow *gpd (m^3/day)*		75,000	284
26	Q_{design}= Average Daily Sewage Flow *gpm (m^3/min)*		52.1	0.197
27	T_{max} =Duration of maximum flow *hours*		2.00	
28	Q_{min} =Minimum pumping rate *gpm (m^3/min)*		13.02	0.049
29	Q_{max} =Maximum pumping rate *gpm (m^3/min)*		65.10	0.247
30	V_{req}= (Q_{peak}-Q_{avg}*60)*T_{max} *gal (m^3)*		17,982	68.1
31				
32	**BASIN SELECTION:**			
33	Freeboard *in (cm)*		12	30.5
34	Tank inside diameter *ft (m)*		10	3.05
35	Freeboard D-Factor		0.948	
36	Minimum Level *in (cm)*		18	45.72
37	Minimum Level D-Factor		0.906	
38	Reference Volume *gal (m^3)*		20,939	79.32
39	Reference tank length *ft (m)*		36.93	11.26
40	Chosen tank length *ft (m)*		40.00	12.20
41	Actual Full Volume *gal (m^3)*		22,744	86.2
42	Actual Working Volume *gal (m^3)*		19,532	74.0
43				
44	**AERATION:**			
45	Required aeration and mixing capacity *SCFM/1000 gal (m^3/min/ m^3)*		2	0.0567
46	Air Flow Rate per Diffuser *SCFM (m^3/min)*		10	0.2834
47	Diffusers required in Flow Equalization Basin		5	
48	Air required for flow equalization basin *SCFM (m^3/min)*		50	1.417

	A	B	C	D
49	**HEAD LOSS CALCULATIONS:**		English	Metric
50			Units	Units
51	Design Average Flow Rate *gpd (m^3/day)*		75,000	284
52	Design Average Flow Rate *gpm (m^3/s)*		52.1	0.197
53	Pump Peak Factor		1.25	
54	Pump Design Flow Rate (one pump) *gpm (m^3/s)*		65.1	0.2465
55	Nominal Diameter of Force Main Pipe *in (cm)*		2	5.1
56	Actual Diameter of Force Main Pipe *in (cm)*		2.067	5.3
57	Flow Velocity in Pipe *ft/s (m/s)*		**6.23**	1.898
58	Pumping Station Elevation *ft (m)*		274	84
59	Discharge Elevation *ft (m)*		288	88
60	Static Head Loss *ft (m)*		14	4
61				
62	**System Losses**			
63	**Force Main at Q_{max}**			
64	Pipe Roughness Factor (cannot exceed 120 for PVC)		120	
65	Diameter of Force Main Pipe *in (cm)*		2.067	5.3
66	Flow Velocity in Pipe *ft/s (m/s)*		**6.23**	1.898
67	Length of Force Main *ft (m)*		100	30
68	Minor Losses	# of	Equivalent	Equivalent
69		Fittings	Length (ft)	Length (ft)
70	22.5° Bends	0	1	0
71	45° Bends	0	3	0
72	90° Bends	2	5	10
73	Check Valves	0	9	0
74	Air Release Valves	0	1	0
75	Total Equivalent Pipe Length *ft (m)*		110	34
76	Frictional Head Loss *ft (m)*		10.80	3.3
77				
78	**Discharge Line at Q_{max}**			
79	Pipe Roughness Factor (cannot exceed 120 for PVC)		120	
80	Diameter of Pump Discharge Line *in (m)*		2.067	5.3
81	Pump Design Flow Rate (one pump) *gpm (m^3/s)*		65.1	0.0000
82	Flow Velocity in Pipe *ft/s (m/s)*		**6.23**	1.898
83	Length of Discharge Line *ft (m)*		17	5
84	Minor Losses	# of	Equivalent	Equivalent
85		Fittings	Length (ft)	Length (ft)
86	22.5° Bends	0	1	0
87	45° Bends	0	3	0
88	90° Bends	2	5	10
89	Check Valves	1	9	9
90	Air Release Valves	0	1	0
91	Total Equivalent Pipe Length *ft (m)*		36	11
92	Frictional Head Loss from above fittings *ft (m)*		3.53	1.08
93				
94	**DYANAMIC HEADLOSS at Q_{max}**		14.34	

	A	B	C	D
95			English	Metric
96			Units	Units
97	**Force Main at Q_{min}**			
98	Pipe Roughness Factor (cannot exceed 120 for PVC)		120	
99	Diameter of Force Main Pipe *in (cm)*		2.067	5.3
100	Flow Velocity in Pipe *ft/s (m/s)*		**1.25**	0.380
101	Length of Force Main *ft (m)*		100	30
102	Minor Losses	# of	Equivalent	Equivalent
103		Fittings	Length (ft)	Length (ft)
104	22.5° Bends	0	1	0
105	45° Bends	0	3	0
106	90° Bends	2	5	10
107	Check Valves	0	9	0
108	Air Release Valves	0	1	0
109	Total Equivalent Pipe Length *ft (m)*		110	34
110	Frictional Head Loss *ft (m)*		0.55	0.2
111				
112	**Discharge Line at Q_{min}**			
113	Pipe Roughness Factor (cannot exceed 120 for PVC)		120	
114	Diameter of Pump Discharge Line *in (m)*		2.067	5.3
115	Pump Design Flow Rate (one pump) *gpm (m^3/s)*		13.0	0.0000
116	Flow Velocity in Pipe *ft/s (m/s)*		**1.25**	0.380
117	Length of Discharge Line *ft (m)*		17	5
118	Minor Losses	# of	Equivalent	Equivalent
119		Fittings	Length (ft)	Length (ft)
120	22.5° Bends	0	1	0
121	45° Bends	0	3	0
122	90° Bends	2	5	10
123	Check Valves	1	9	9
124	Air Release Valves	0	1	0
125	Total Equivalent Pipe Length *ft (m)*		36	11
126	Frictional Head Loss from above fittings *ft (m)*		0.18	0.05
127				
128	**DYANAMIC HEADLOSS at Q_{min}**		0.73	
129				
130	**HEAD LOSS SUMMARY:**			
131	Static Head Loss *ft (m)*		14	4
132	Total Head Loss at Q_{min} *ft (m)*		14.73	4
133	Total Head Loss at Q_{max} *ft (m)*		28.34	
134				
135	**PUMP SELECTION:**			
136	**SE1044L 6.00" IMP**			
137	Head at Q_{min} *ft (m)*		59.00	18
138	Head at Q_{max} *ft (m)*		38.00	12
139				
140	**CONTROL VALVE SELECTION:**			
141	**MILLIKEN 2" MCV VALVE**			
142	Required throttling Head at Q_{min} *ft (m)*		44.27	13
143	Required throttling Head at Q_{max} *ft (m)*		9.66	3
144	Percent open at Q_{min}		15%	
145	Percent open at Q_{max}		75%	

	A	B	C	D
1	**SANTEC DESIGN CALCULATIONS**			
2	**FOR BOD REMOVAL**			
3				
4				
5	**PROJECT NAME:**	**Flagstaff Meadows Site 2**		
6	**PROJECT LOCATION:**	**BELLEMONT, ARIZONA**		
7	**DATE:**	**9/29/2005**		
8	**PREPARED BY:**	**NAW**		
9				
10	**DESIGN PARAMETERS:**			
11			English	Metric
12			Units	Units
13	Q_{design} = Design Average Flow *gpd (m^3/day)*		75,000	284
14	BOD_{inf}= Design Influent wastewater BOD_5 Concentration *ppm (mg/l)*		220	220
15	BOD_{inf} *LB/day (kg/day)*		137.4	62.3
16	T_{inf}= Temperature of Plant Influent *F° (C°)*		68	20
17	pH_{inf}= Design Influent wastewater pH		7.2	
18	BOD_{eff}= Design Effluent BOD_5 Concentration *ppm (mg/l)*		30	30
19	BOD_{eff} *LB/day (kg/day)*		18.7	8.5
20	**BOD_5 Removal Efficiency**		**86.4%**	
21				
22	**CALCULATION OF AERATION VOLUME:**			
23	Design Aeration Detention time *hours*		17.30	
24	Freeboard *in (cm)*		12	30.48
25	Tank inside diameter *ft (m)*		12	3.66
26	Freeboard D-Factor		0.960	
27	Reference Volume *gal (m^3)*		56,304	213.28
28	Chosen tank length *ft (m)*		34.00	10.37
29	Number of Aeration Tanks		2	
30	Actual Full Volume *gal (m^3)*		56,514	214.07
31	Actual Working Volume *gal (m^3)*		54,264	205.55
32				
33	**CALCULATION OF AERATION TANK LOADING:**			
34	Actual Working Volume *ft^3 (m^3)*		7,254	205.5
35	**Aeration Tank Loading *lbs BOD5/1000 ft^3 (kg BOD_5/m^3)***		**18.9**	**0.3**
36	**MLSS CALCULATIONS:**			
37	Design MLSS Concentration prior to recycle *ppm (mg/l)*		220	220
38	*~Assumes influent suspended solids concentration*			
39	Aeration Volume prior to recycle (25%) *gal (m^3)*		13,566	51.39
40	MLSS prior to recycle *lbs (kg)*		24.89	11.30
41	**Design MLSS Concentration after recycle *ppm (mg/l)***		**4,000**	**4,000**
42	Aeration Volume after recycle (75%) *gal (m^3)*		40,698	154.16
43	MLSS after recycle *lbs (kg)*		1358	616.39
44	**Aeration Tank Loading *lbs BOD_5/lb MLSS (kg BOD_5/kg MLSS)***		**0.099**	**0.099**
45				
46	**Loading *lbs solids/lb BOD_5 removed (kg solids/ kg BOD_5 removed)***		**11.6**	**11.7**
47				
48	**CALCULATION OF AERATION REQUIREMENTS:**			
49	Aeration Capacity *ft^3 air / lb BOD_5 removed (m^3 air /kg BOD_5 removed)*		**2,100**	**26.97**
50	Air Flow Rate per Diffuser *scfm (m^3/min)*		4	0.11
51	**Required Number of Diffusers**		**44**	

	A	B	C	D
1	**SANTEC DESIGN CALCULATIONS**			
2	**FOR CLARIFICATION**			
3				
4				
5	**PROJECT NAME:**	**Flagstaff Meadows Site 2**		
6	**PROJECT LOCATION:**	**BELLEMONT, ARIZONA**		
7	**DATE:**	**9/29/2005**		
8	**PREPARED BY:**	**NAW**		
9			English	Metric
10	**DESIGN PARAMETERS:**		Units	Units
11	**CLARIFIER DESIGN**			
12	Flow rate *gpd (m^3/day)*		75,000	284.10
13	Clarifier recommended loading *gal/ft^2/day (m^3/m^2/day)*		481	19.56
14	Maximum allowable clarifier loading rate *gal/ft^2/day (m^3/m^2/day)*		1,000	40.70
15	Clarifier loading safety factor		2.1	
16				
17	Required area of clarifier *ft^2 (m^2)*		156.1	14.51
18	Freeboard in clarifier *in (cm)*		22	55.88
19	Width of surface area including baffle offset *ft (m)*		4.54	1.38
20	Clarifier baffle offset *in (cm)*		8	20.32
21	Required diameter *ft (m)*		10.00	3.05
22	Required clarifier length *ft (m)*		34.41	10.49
23	D-Factor		0.8743	
24	Baffle offset multiplier		0.5846	
25	Selected clarifier length *ft (m)*		36.00	10.98
26	Selected clarifier working volume *gal (m^3)*		10,419	39.47
27	Full Volume *gal (m^3)*		11,917	45.14
28	Santec clarifier detention time *hr.*		3.3	
29				
30	**EFFLUENT WEIR DESIGN AND LOADING**			
31	Weir length *ft (m)*		33.5	10.21
32	*~Clarifier length - minus tank dome length*			
33	Weir type, 45 deg. V notch.			
34	Number of V-notches required		45	
35	Weir loading rate *gal/ft/day (m^3/m/day)*		2,239	27.76
36				
37	**SLUDGE REMOVAL**			
38	**RETURN SLUDGE FACILITIES(FROM CLARIFIER)**			
39	Operation range of return sludge system is 50-150% of plant design flow			
40	Number of 3" airlifts required		5	
41	Maximum return rate *gpm (m^3/min)*		78	0.2959
42	Total air required for return sludge system *SCFM (m^3/min)*		15.6	0.443
43	*~Return rate x 0.2 SCF per gallon moved*			
44	**SKIMMER FACILITIES(FROM CLARIFIER)**			
45	Operation range of skimmer system is 0-100% of plant design flow			
46	Number of 3" skimmers required		5	
47	Skimmer capacities *gpm (m^3/min)*		52	0.1973
48	Total air required for skimmer system *SCFM (m^3/min)*		10.4	0.295
49	*~Skimmer capacity x 0.2 SCF per gallon moved*			

	A	B	C	D
1	**SANTEC DESIGN CALCULATIONS**			
2	**FOR REAERATION**			
3				
4				
5	**PROJECT NAME:**	**Flagstaff Meadows Site 2**		
6	**PROJECT LOCATION:**	**BELLEMONT, ARIZONA**		
7	**DATE:**	**9/29/2005**		
8	**PREPARED BY:**	**NAW**		
9				
10	**DESIGN PARAMETERS:**			
11			English	Metric
12			Units	Units
13	**REAERATION DESIGN**			
14	Reaeration length *ft (m)*		36	10.98
15	Reaeration reactor working volume *gal (m^3)*		7,403	28.04
16	Full Volume *gal (m^3)*		8,467	32.07
17				
18	**RETURN SLUDGE FACILITIES(FROM REAERATION)**			
19	Operation range of return sludge system is 50-150% of plant design flow			
20	Number of 3" airlifts required		5	
21	Maximum return rate *gpm (m^3/min)*		78	0.2959
22	Total air required for return sludge system *SCFM (m^3/min)*		15.6	0.443
23	*~Return rate x 0.2 SCF per gallon moved*			
24				
25	**REAERATION MIXING REQUIREMENTS**			
26	~One diffuser per 2.5' of tank length			
27	Number of diffusers required		15	
28	Air Flow Rate per Diffuser *scfm (m^3/min)*		10	0.28
29	Total air required for reaeration diffusers *SCFM (m^3/min)*		150	

	A	B	C	D
1	**SANTEC DESIGN CALCULATIONS**			
2	**FOR NITRIFICATION**			
3				
4				
5	**PROJECT NAME:**	**Flagstaff Meadows Site 2**		
6	**PROJECT LOCATION:**	**BELLEMONT, ARIZONA**		
7	**DATE:**	**9/29/2005**		
8	**PREPARED BY:**	**NAW**		
9			English	Metric
10	**DESIGN PARAMETERS:**		Units	Units
11	**NITRIFICATION CALCULATIONS**			
12				
13	N_{inf} = Influent Nitrogen concentration *PPM (mg/l)*		39.6	39.6
14	~Assume 18% of Influent BOD			
15	N_{eff} = Desired Effluent Ammonia Nitrogen concentration *PPM (mg/l)*		1.0	
16	Nitrification Temperature *F° (C°)*		68	20.00
17	Mixed liquor suspended solids *PPM (mg/l)*		4,000	4,000
18	Mixed liquor volatile suspended solids *PPM (mg/l)*		3,000	3,000
19	Minimum Dissolved Oxygen *PPM (mg/l)*		2	2
20	BOD to TKN ratio (entering recycle zone)		5.6	
21	~Assume Influent BOD concentration			
22	Fraction of Nitrifiers (based on BOD/TKN ratio)		0.05	
23	X = Nitrifier concentration *PPM (mg/l)*		140	140
24	$\Theta_{recycle}$ = Detention Time in nitrification zone (aeration after recycle) *hrs*		17.4	
25				
26	**DESIGN CONSTANTS**			
27	K_{O2} = Half-Saturation constant for oxygen *PPM (mg/l)*		1.3	1.3
28	Y = Heterotrphic yield coefficient for ammonia oxidation		0.2	0.09
29	k_d = Decay coefficient *day^{-1}*		0.05	
30	μ_m = Maximum specific growth rate *day^{-1}*		0.5	
31	K_n = Half-Saturation constant for ammonia oxidation *PPM (mg/l)*		0.728	0.728
32	$K_n=10^{(0.051)T - 1.158}$			
33	μ'_m = Maximum Possible Nitrifier growth rate *day^{-1}*		0.407	
34	$\mu'_m = \mu_m e^{0.008(T-15)}[DO/(K_{O2} + DO)][1- 0.833(7.2 - pH)]$			
35	Θ_c^m = Minimum cell residence time *day*		2.46	
36	$\Theta_c^m = 1/\mu'_m$			
37	k' = Maximum rate of substrate utilization *day^{-1}*		2.03	
38	$k' = \mu'_m/Y$			
39	U = Substrate utilization factor *day^{-1}*		2.011	
40	$U = (k'*N_{eff})/(K_n + N_{eff})$			
41	$\Theta_{recyclereq}$ = Required Detention time in nitrification zone *hrs*		3.29	
42	$\Theta_{recyclereq} = (N_{inf} - N_{eff})/(U * X)$			
43	Nitrification Zone Working Volume *gal (m^3)*		56,514	
44	Nitrification Safety Factor		5.3	
45	$SF = \Theta_{recycle}/\Theta_{recyclereq}$			
46	Note: If the safety factor is less than one, the plant can not achieve this level of nitrification.			
47	**AERATION FOR NITRIFICATION**			
48	NH3-N available to be oxidized to NO3-N *LB (kg)*		24.74	11.2
49	Oxygen required to convert NH3-N to NO3-N			
50	*~Use 4.6 LB oxygen per LB NH-3.*			
51	Nitrification oxygen requirement *LB/day (kg/day)*		113.8	51.6

	A	B	C	D
1	**SANTEC DESIGN CALCULATIONS**			
2	**FOR INFLUENT ANOXIC DENITRIFICATION**			
3				
4				
5	**PROJECT NAME:**	**Flagstaff Meadows Site 2**		
6	**PROJECT LOCATION:**	**BELLEMONT, ARIZONA**		
7	**DATE:**	**9/29/2005**		
8	**PREPARED BY:**	**NAW**		
9			English	Metric
10	**DENITRIFICATION CALCULATIONS**		Units	Units
11				
12	**DETERMINATION OF HYDRAULIC DETENTION TIME AT AVERAGE DRY WEATHER FLOW**			
13	*(See USEPA Process Design Manual for Nitrogen Control)*			
14	HT = 24 * (Do - D1) / (X1 x Qd)			
15	*~Nitrogen Control, page 5-6 (5-2)*			
16	Qd = NO3 removal rate *lb NO3 removed/lb VSS/day (kg/day)*		0.06	0.027
17	Do = Influent Total Nitrogen concentration *PPM (mg/l)*		39.6	39.6
18	D1 = Effluent NO3 concentration *PPM (mg/l)*		25.5	25.5
19	X1 = MLVSS concentration *PPM (mg/l)*		3000	3000
20	HT = Minimum Hydraulic detention time *hrs*		1.88	
21				
22	**EQUATION FOR DETERMINING DENITRIFICATION REACTOR VOLUME**			
23	Vr = Q x HT / 24			
24	Vr = Required reactor volume gal (m^3)		5,875	22.3
25	Reactor freeboard *in (cm)*		12	30.5
26	Reactor diameter *ft (m)*		12.00	3.66
27	D-Factor		0.9602	
28	Reference Volume *gal (m^3)*		6,119	23.2
29	Chosen length *ft (m)*		15.00	
30	Actual working volume *gal (m^3)*		11,680	44.2
31	Full Volume *gal (m^3)*		12,164	46.1
32	**Tank Loading *lbs NO_3-N/day/ 1000 ft^3***		**15.84**	
33				
34				
35	**DENITRIFICATION MIXERS**			
36	Operation range of mixer system is 0-200% of plant design flow			
37	Number of 3" mixers required		4	
38	Maximum mixing rate *gpm (m^3/min)*		104.2	
39	Total air required for mixing system *SCFM (m^3/min)*		20.8	
40	*~Return rate x 0.2 SCF per gallon moved*			

	A	B	C	D
1	**SANTEC DESIGN CALCULATIONS**			
2	**FOR DENITRIFICATION**			
3				
4				
5	**PROJECT NAME:**	**Flagstaff Meadows Site 2**		
6	**PROJECT LOCATION:**	**BELLEMONT, ARIZONA**		
7	**DATE:**	**9/29/2005**		
8	**PREPARED BY:**	**NAW**		
9			English	Metric
10	**DENITRIFICATION CALCULATIONS**		Units	Units
11	**DETERMINATION OF THE MINIMUM SOLIDS RETENTION TIME FOR DENITRIFICATION**			
12	*(See USEPA Process Design Manual for Nitrogen Control)*			
13	Tm = 1 / ((YD x QD) - Kd)			
14	YD = denitrifier yield *lb VSS grown/lb NO3 removed (kg)*		0.80	0.36
15	QD = Peak NO3 removal rate *lb NO3/lb VSS/day (kg/day)*		0.20	0.09
16	Kd = Decay coefficient *day^{-1}*		0.04	
17	*~Constants from Metcalf and Eddy Third Edition Tables 11-19 and 11-20*			
18	Tm = minimum solids retention time *days*		8.3	
19				
20	**EQUATION FOR DETERMINING DESIGN SOLIDS RETENTION TIME**			
21	Td = SF x Tm			
22	SF = Safety factor		2.0	
23	*~To account for diurnal load variations*			
24	Td = Design solids retention time *day*		16.7	
25				
26	**DETERMINATION OF THE DESIGN NITRATE REMOVAL RATE**			
27	Qd = ((1/Td) + Kd) / YD			
28	*~Nitrogen Control page 5-5 (3-50)*			
29	Qd = NO3 removal rate *lb NO3 removed/lb VSS/day (kg/day)*		0.125	0.057
30				
31	**DETERMINATION OF STEADY STATE NO_3 CONTENT OF THE EFFLUENT**			
32	*(See USEPA Process Design Manual for Nitrogen Control)*			
33	D1 = (Qd x KD) / (QD - Qd)			
34	*~Nitrogen Control, page 5-6 (5-1)*			
35	KD = Half saturation constant *PPM (mg/l NO3)*		0.16	0.16
36	*~Wastewater Engineering, page 3-37 Section 3.3.5.4*			
37	D1 = Effluent NO3 concentration *PPM (mg/l)*		0.267	0.267
38				
39	**DETERMINATION OF HYDRAULIC DETENTION TIME AT AVERAGE DRY WEATHER FLOW**			
40	*(See USEPA Process Design Manual for Nitrogen Control)*			
41	HT = 24 * (Do - D1) / (X1 x Qd)			
42	*~Nitrogen Control, page 5-6 (5-2)*			
43	Do = Influent Total Nitrogen concentration *PPM (mg/l)*		25.5	25.5
44	D1 = Effluent NO3 concentration *PPM (mg/l)*		0.267	0.267
45	X1 = MLVSS concentration *PPM (mg/l)*		3000	3000
46	HT = Minimum Hydraulic detention time *hrs*		1.61	
47				

	A	B	C	D
48	**EQUATION FOR DETERMINING DENITRIFICATION REACTOR VOLUME**			
49	Vr = Q x HT / 24			
50	Vr = Required reactor volume gal (m^3)		5,047	19.1
51	Reactor freeboard *in (cm)*		12	30.5
52	Reactor diameter *ft (m)*		12.00	3.66
53	D-Factor		0.9602	
54	Reference Volume *gal (m^3)*		5,256	19.9
55	Chosen length *ft (m)*		15.00	
56	Actual working volume *gal (m^3)*		11,680	44.2
57	Full Volume *gal (m^3)*		12,164	46.1
58	**Tank Loading *lbs NO_3-N/day/ 1000 ft^3***		**10.20**	
59				
60	**EQUATION FOR DETERMINING METHANOL REQUIREMENT**			
61	*(See USEPA Process Design Manual for Nitrogen Control page 3-34)*			
62	Mr = 3.0 x Q x (Do - D1) x 8.33			
63	Mr = Methanol requirement *lb/day (kg/day)*		47.3	
64	Mr = Methanol requirement *gpd (m^3/day)*		7.2	
65				
66	**Methanol/ *NO_3-N Ratio***		**3.0**	
67				
68	**DENITRIFICATION MIXERS**			
69	Operation range of mixer system is 0-200% of plant design flow			
70	Number of 3" mixers required		3	
71	Maximum mixing rate *gpm (m^3/min)*		104.2	
72	Total air required for mixing system *SCFM (m^3/min)*		20.8	
73	*~Return rate x 0.2 SCF per gallon moved*			

	A	B	C	D
1	**SANTEC DESIGN CALCULATIONS**			
2	**FOR SLUDGE MANAGEMENT**			
3				
4				
5	**PROJECT NAME:**	**Flagstaff Meadows Site 2**		
6	**PROJECT LOCATION:**	**BELLEMONT, ARIZONA**		
7	**DATE:**	**9/29/2005**		
8	**PREPARED BY:**	**NAW**		
9				
10	**PROCESS DESIGN FROM:**			
11	**"Wastewater Engineering Treatment, Disposal, and Reuse"**			
12	**Metcalf and Eddy , Inc., Third Edition**			
13			English	Metric
14			Units	Units
15	PLANT FLOW *gpd(m^3/day)*		150,000	568.2
16	**INFLUENT**			
17	PLANT INFLUENT BOD_5 CONCENTRATION *PPM (mg/l)*		220	220
18	TSS % VOLATILE		75%	
19	PLANT INFLUENT SUS. SOLIDS CONCENTRATION *PPM (mg/l)*		220	220
20	**EFFLUENT**			
21	PLANT EFFLUENT BOD_5 CONCENTRATION *PPM (mg/l)*		30	30
22	PLANT EFFLUENT SUS. SOLIDS CONCENTRATION *PPM (mg/l)*		30	30
23	**DESIGN EQUATIONS**			
24	$P_x = Y_{obs} * Q * (S_o - S) * 8.34$ *lbs/day*			
25	$Y_{obs} = Y/(1+k_d * \theta_c)$			
26	$V_s = (Q_i * X_i)/[X * (k_d * P_v + 1/\theta s)]$ *gal (m^3)*			
27	$Q_i = P_x/X_i * 119{,}788$			
28	*Definition of Variables*			
29	P_x= Net waste activated sludge *lbs/day (kg/day)*		89.1	40.5
30	Y_{obs}= observed yield *lbs biomass/ lb* BOD_5		0.375	0.375
31	Q = process flow rate *Mgal/day (m^3/day)*		0.15000	56.8
32	S_o = Influent BOD_5 concentration *ppm (mg/l)*		220	220
33	S = Effluent BOD_5 concentration *ppm (mg/l)*		30	30
34	Y = theoretical yield coefficient *lbs biomass/ lb* BOD_5		0.60	0.60
35	k_d= endogenous decay coefficient *day^{-1}*		0.06	0.06
36	θ_c= Mean Cell Residence Time in process *days*		10	10
37	Q_i= net waste volume *gal/day (m^3/day)*		2669	10.1
38	X_i=waste activated sludge concentration *ppm (mg/l)*		4,000	4,000
39	X = digester suspended solids concentration ppm (mg/l)		4,000	4,000
40	P_v= volatile fraction of digester suspended solids		0.75	0.8
41	θ_s= Mean Cell Residence Time in digester *days*		40	40
42	V_s=required digester treatment volume gal (m^3)		31,403	119.0

	A	B	C	D
43			English	Metric
44	**CAPACITY OF SLUDGE HOLDING TANK**		Units	Units
45	Required digestion volume *gal (m^3)*		31,403	119.0
46	Required supernatant volume gal (m^3)		13,346	50.6
47	Required holding tank volume *gal (m^3)*		44,750	169.5
48	Sludge Holding tank diameter *ft (m^3)*		10.00	3.05
49	Chosen holding tank length *ft (m)*		40.00	12.20
50	Chosen holding tank volume *gal (m^3)*		22,736	86.1
51				
52	**AERATION:**			
53	Required aeration and mixing capacity *SCFM/1000 gal (m^3/min/ m^3)*		2	0.0567
54	Air Flow Rate per Diffuser *SCFM (m^3/min)*		10	0.2834
55	Diffusers required in Sludge Holding Tank		5	
56	Air required for Sludge Holding Tank *SCFM (m^3/min)*		50	1.417

	A	B	C	D
1	**SANTEC DESIGN CALCULATIONS**			
2	**FOR CHLORINE DISINFECTION**			
3				
4				
5	**PROJECT NAME:**	**Flagstaff Meadows Site 2**		
6	**PROJECT LOCATION:**	**BELLEMONT, ARIZONA**		
7	**DATE:**	**9/29/2005**		
8	**PREPARED BY:**	**NAW**		
9			English	Metric
10	**DISINFECTION CALCULATIONS**		Units	Units
11	Design flow of the treatment plant *gal (m^3)*		75,000	284.10
12	Peak factor(multiplier of design flow that reaches clorine chamber)		2.5	
13	~Maximum pumping capacity of equalization pumps			
14	Maximum flow reaching chlorine contact chamber *gal (m^3)*		187,500	710.25
15	Minimum required detention time *min*		15	
16	Required basin volume *gal (m^3)*		1,953	7.40
17				
18	**REQUIRED BASIN VOLUME CALCULATIONS**			
19	Required Working Volume *gal (m^3)*		1,953	7.40
20	Tank inside diameter *ft (m)*		8.00	2.44
21	Water Surface Area gal/ft		376	
22	Distance cylinder extends above grade *ft (m)*		1	0.30
23	Depth of Inlet Invert Below Grade *ft (m)*		5.8	1.77
24	Distance between inlet and outlet inverts *ft (m)*		0.5	0.15
25	Required cylinder length to achieve required contact time *ft (m)*		5.2	1.58
26	Required Cylinder Length *ft (m)*		12.5	3.82
27	Chosen Cylinder Length *ft (m)*		12.5	3.81
28	Actual Working Volume *gal (m^3)*		2,324	8.80
29	Actual Full Volume *gal (m^3)*		4,700	17.81
30				
31	**CHLORINE DOSAGE CALCULATIONS**			
32	Required Dosage *ppm (mg/l)*		8.0	8.0
33	Required Feed Rate *lbs/hr (kg/hr)*		0.209	0.095
34				
35	**DECHLORINATION DOSAGE CALCULATIONS**			
36	Total Chlorine Residual *ppm (mg/l)*		1.0	1.0
37	Required Na_2SO_3 Dosage *ppm (mg/l)*		2.0	2.0
38	Required Feed Rate at Peak flow *lbs/hr (kg/hr)*		0.128	0.058
39	35% 5 oz. Tablets per Day		1	

	A	B	C	D
1				
2	**SANTEC DESIGN CALCULATIONS**			
3	**FOR EFFLUENT LIFT STATION**			
4				
5				
6	**PROJECT NAME:**	**Flagstaff Meadows Site 2**		
7	**PROJECT LOCATION:**	**BELLEMONT, ARIZONA**		
8	**DATE:**	**9/29/2005**		
9	**PREPARED BY:**	**NAW**		
10				
11	**HEAD LOSS CALCULATIONS:**			
12	Design Average Flow Rate *gpd (m^3/day)*		150,000	568
13	Design Average Flow Rate *gpm (m^3/s)*		104.2	0.394
14	Flow Peak Factor		3.88	
15	Pump Design Flow Rate (one pump) *gpm (m^3/s)*		403.9	1.5290
16	Flow Velocity in Pipe *ft/s (m/s)*		**2.58**	0.786
17	Pumping Station Elevation *ft (m)*		7130	2174
18	Discharge Elevation *ft (m)*		7140	2177
19	Static Head Loss *ft (m)*		10	3
20	**Selected Pump: ABS AFP1042 M70/4-5**			
21				
22	**System Losses**			
23	**Force Main**			
24	Pipe Roughness Factor (cannot exceed 120 for PVC)		120	
25	Diameter of Force Main Pipe *in (cm)*		8	20.3
26	Flow Velocity in Pipe *ft/s (m/s)*		**2.58**	0.786
27	Length of Force Main *ft (m)*		6034	1840
28	Minor Losses	# of	Equivalent	Equivalent
29		Fittings	Length (ft)	Length (ft)
30	22.5° Bends		4	0
31	45° Bends	5	11	55
32	90° Bends	5	20	100
33	Check Valves		37	0
34	Air Release Valves		5	0
35	Total Equivalent Pipe Length *ft (m)*		6189	1887
36	Frictional Head Loss *ft (m)*		24.47	7.5
37	**Pump Discharge Line**			
38	Pipe Roughness Factor (cannot exceed 120 for PVC)		120	
39	Diameter of Pump Discharge Line *in (m)*		8	20.3
40	Flow Velocity in Pipe *ft/s (m/s)*		**2.58**	0.786
41	Length of Discharge Line *ft (m)*		20	6

	A	B	C	D
42	Minor Losses	# of	Equivalent	Equivalent
43		Fittings	Length (ft)	Length (ft)
44	22.5° Bends		4	0
45	45° Bends		11	0
46	90° Bends	2	20	40
47	Check Valves	1	37	37
48	Air Release Valves	1	5	5
49	Total Equivalent Pipe Length *ft (m)*		102	31
50	Frictional Head Loss from above fittings *ft (m)*		0.40	0.12
51	**HEAD LOSS SUMMARY**			
52	Static Head Loss *ft (m)*		10	3
53	Total Frictional Head Loss *ft (m)*		24.88	8
54	Total Head Loss ft (m)		**34.88**	11
55	**BASIN CALCULATIONS:**			
56	Design Average Flow Rate *gpd (m^3/day)*		150,000	568
57	Design Average Flow Rate *gpm (m^3/s)*		104.2	0.394
58	Required Fill Time *min*		45	
59	Required Wetwell Volume *gal (m^3)*		4,688	17.7
60	$V_{min} = T * Q_{avg}$			
61	T = Required Fill Time			
62	Q_{avg} = Average Flow Rate			
63				
64	**Tank Selection - Horizontal FRP Effluent EQ Tank**			
65				
66	High Water Level Float (ft)	8		
67	Lag pump On float (ft)	7		
68	Lead pump On float (ft)	5.5		
69	Minimum Water Level in Tank Off float (ft)	1.5		
70	Tank Inside Diameter *ft (m)*	10		3.049
71				
72	Required Working Volume *gal (m^3)*		4,688	18
73	Find area of wetted perimeter			
74		F *ft(m)*	4.5	1.4
75		M *ft(m)*	1.5	0.5
76		Radius *ft(m)*	5.0	1.5
77		A1 *ft(m)*	1.243734296	0.4
78		A2 *ft(m)*	10.94456147	3.3
79		A3 *ft(m)*	6.248749875	1.9
80		USABLE AREA *ft^2 (m^2)*	36.87409129	3.4
81		D factor	0.46950	
82				
83	Reference Volume *gal (m^3)*		9,984	38
84	Approximate tank length *ft (m)*		18.40	5.61
85	Chosen tank length *ft (m)*		18.50	5.64
86	Tank Volume Override *gal (m^3)*			0.00
87	Full volume *gal (m^3)*		10,094	38.24
88	Actual Working Volume *gal (m^3)*		4,739	17.95

	A	B	C	D
1	**SANTEC DESIGN CALCULATIONS**			
2	**FOR AERATION**			
3				
4				
5	**PROJECT NAME:**	**Flagstaff Meadows Site 2**		
6	**PROJECT LOCATION:**	**BELLEMONT, ARIZONA**		
7	**DATE:**	**9/29/2005**		
8	**PREPARED BY:**	**NAW**		
9			English	Metric
10	**AERATION DESIGN PARAMETERS**		Units	Units
11	Q_{design} = Design Average Flow *gpd (m^3/day)*		75,000	284.10
12	BOD_{inf}= Design Influent wastewater BOD_5 Concentration *ppm (mg/l)*		220	
13	BOD_{inf} *LB/day (kg/day)*		137.4	62.3
14	BOD_{eff}= Design Effluent BOD_5 Concentration *ppm (mg/l)*		30	30
15	BOD_{eff} *LB/day (kg/day)*		18.7	8.5
16				
17	Requirement for BOD Removal *lbs O_2/lb design peak hourly BOD*		1.5	1.5
18	*~Recommended Standards for Wastewater Facilities*			
19	Design peak hourly BOD *lbs/hour (kg/hour)*		7.2	3.2
20	**BOD oxygen requirement *lb/day (kg/day)***		**257.7**	**116.9**
21				
22	**Nitrification oxygen requirement *lb/day (kg/day)***		**113.8**	**51.6**
23				
24	**Total Aeration Oxygen Requirement *lb/day (kg/day)***		**371.5**	**168.5**
25				
26	**OXYGEN TRANSFER DESIGN PARAMETERS**			
27	Depth of diffusers *ft (m)*		10.5	3.20
28	Air Flow Rate per Diffuser *SCFM (m^3/min)*		4	0.11336
29	Treatment Plant Elevation *ft (m)*		7130	
30	Density of Oxygen at Elevation *lb/ft^3 (kg/m^3)*		0.07126	
31	Diffuser Transfer efficiency *%/ft of submergence*		1%	
32	~Assume 50% SOTE			
33	Oxygen transfer *lb/day/diffuser (kg/day/diffuser)*		9.1	4.10
34				
35	Required Number of Diffusers		44	
36	**Oxygen transfer *lb/day (kg/day)***		**398.2**	**180.59**
37				

	A	B	C	D
38	**REQUIRED BLOWER CAPACITY CALCULATIONS**			
39	**Number of Aeration Diffusers**		44	
40	Air Flow Rate per Diffuser *SCFM (m^3/min)*		4	0.113
41	Aeration Air Flow Rate SCFM (m3/min)		176	4.988
42	**Number of Flow Equalization Diffusers**		5	
43	Air Flow Rate per Diffuser *SCFM (m^3/min)*		10	0.283
44	Flow Equalization Air Flow Rate *SCFM (m^3/min)*		50	1.417
45	**Number of Reaeration Diffusers**		15	
46	Air Flow Rate per Diffuser *SCFM (m^3/min)*		10	0.283
47	Flow Equalization Air Flow Rate *SCFM (m^3/min)*		150	4.251
48	**Number of Sludge Holding Tank Diffusers**		5	
49	Air Flow Rate per Diffuser *SCFM (m^3/min)*		10	0.283
50	Sludge Holding Tank Air Flow Rate *SCFM (m^3/min)*		50	1.417
51				
52	**Airlift air flow rates**			
53	Return Activated Sludge (from clarifier) *SCFM (m^3/min)*		15.6	0.443
54	Return Mixed Liquor (from reaeration) *SCFM (m^3/min)*		15.6	0.443
55	Skimmer (from clarifier) *SCFM (m^3/min)*		10.4	0.295
56	Denitrification Mixers *SCFM (m^3/min)*		41.7	1.181
57				
58	**Total Required Airflow Rate *SCFM (m^3/min)***		**509**	**14.435**

Company: Dresser ROOTS
Address: 2135 Highway 6 South; Houston, TX 77077
281-966-4464/ Fax: 281-966-4711
Contact: Phil Gordon

ROOTS BLOWER PERFORMANCE SUMMARY: (11/29/2005)

AMBIENT CONDITIONS:

Gas	AIR	
Relative Humidity	36%	
Molecular Wt.	28.527	
k-Value	1.391	
Specific Gravity	.985	
Ambient Temp.	110	deg F
Ambient Pressure	11.27	PSIA
Elevation	7130	feet

INPUT CONDITIONS:

Actual Volume	764	ICFM +/-5 %
Std. Volume	509	SCFM
Mass/Wt. Flow	39	#/min +/-5 %
System Inlet Pressure	11.27	PSIA
Inlet Pr. Loss	0	PSI
System Disch Pressure	5.5	PSIG
Disch Pr. Loss	0	PSI
Inlet Temperature	120	deg F

STANDARD CONDITIONS:

Pressure	14.7	PSIA
Temperature	68	deg F
Relative Humidity	36	%

SELECTED UNIT DETAIL:

Model	615	URAI
Speed	1406	RPM 60%
Power at Blower Shaft	25.4	BHP +/- 4%
Blower Differential Pressure	5.50	PSI 92%
Temperature Rise	105	deg F 81%
Discharge Temperature	225	deg F
Discharge Volume	606	ACFM
Gear Tip Speed	2210	FPM
V-Belt: Est. B10 Brg Life:	62528	hours
Coupling: Est. B10 Brg Life:	62528	hours
Est. Free Field Noise @ 1 m.	84.3	dBa
CFR	0.74	
Weight	425	lbs.
Shaft Dia.	1.375	in.
Min. Sheave Dia.	8	in.
Inlet/Disch Conn.	6F	

615 URAI: Variable Speed Performance

Dresser ROOTS

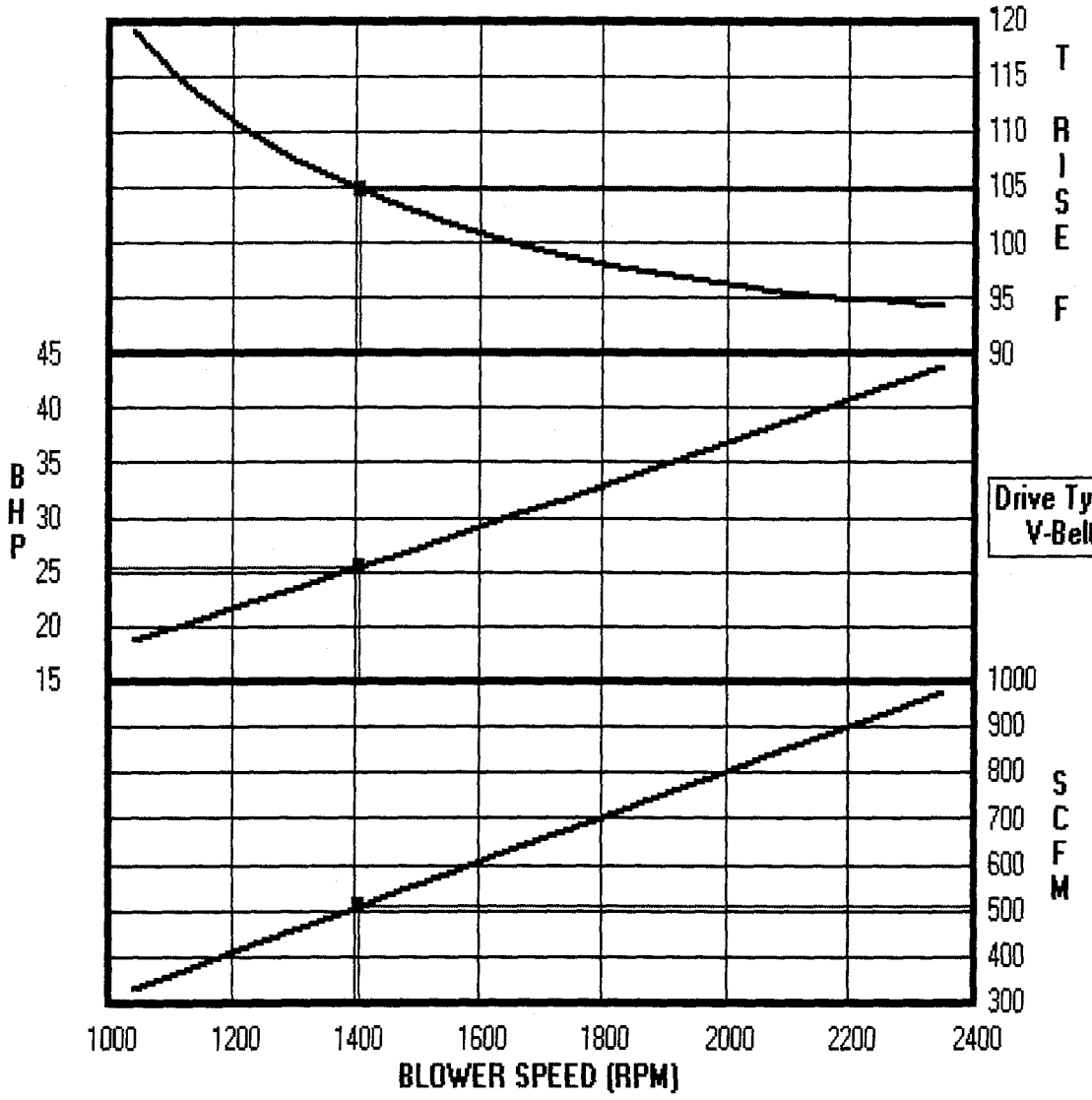

Drive Type: V-Belt

Enter a new Speed

Recalc

Close Form

Will not print if this button is used.

Print Curve

You must press the Print Screen keyboard button before the Print Curve Button.

INLET CONDITIONS: AIR
RH = 36.00%, MW = 28.527, k = 1.391, Tin = 120 deg F
DESIGN: Speed = 1406 RPM
System Inlet P = 11.27 PSIA
System Disch P = 5.5 PSIG
STD: RH = 36%, T = 68 deg F, P = 14.7 PSIA

CATERPILLAR

Project

Project Name	Flagstaff Meadows Site 2
Company Name	Santec Corporation
Contact Name	Utility Source LLC
Creation Date	12/02/2005
Last Saved Date	12/02/2005

Project Characteristics

Connection	3 Phase
Cycle	Standby
L-N/L-L Volts	277/480
Frequency	60 Hz
Engine Speed	1800 RPM
Max Allowable Voltage Dip	35%
Excitation	No Restriction

Site Requirements

Max Ambient Temperature	120 F
Altitude	7500 ft
Fuel Type	Diesel
UL 2200 Listed	No
CSA Certified	No
US EPA Non-Road Mobile Certified	No
Communication/Data Center	No

Load Analysis

Load Step 1

30.00 HP (Output) Variable Frequency Drive (NEMA Motor) - F (3 Phase) Blower
Inrush kVA: 57.81 Caterpillar Recommended Voltage Dip: 30%
Pulse: 6
Running Power Factor: 0.90 Allowing Intermittent Starting
Starting Power Factor: 0.42 Efficiency: 0.86
Loaded (Clutched during start)

Step Starting kVA (Vector Sum): 57.81 **Allowable Step Voltage Dip: 30%**

Load Step 2

10.00 HP (Output) Quantity: 2 Motor - NEMA - G Effluent Lift Pumps
Inrush kVA: 118.00 Caterpillar Recommended Voltage Dip: 30%
Starting Method: Across the Line
Running Power Factor: 0.82
Starting Power Factor: 0.51 Efficiency: 0.87
Loaded (Clutched during start)

Step Starting kVA (Vector Sum): 135.66 **Allowable Step Voltage Dip: 30%**

Load Step 3

5.00 HP (Output) Quantity: 1 Motor - NEMA - H Comminutor
Inrush kVA: 34.00 Caterpillar Recommended Voltage Dip: 30%
Starting Method: Across the Line
Running Power Factor: 0.79 Allowing Intermittent Starting
Starting Power Factor: 0.57 Efficiency: 0.84
Loaded (Clutched during start)

Step Starting kVA (Vector Sum): 43.93 **Allowable Step Voltage Dip: 30%**

Load Step 4

1.00 HP (Output) Variable Frequency Drive (NEMA Motor) - L (3 Phase) Flow Eq Pumps
Inrush kVA: 5.02 Caterpillar Recommended Voltage Dip: 30%
Pulse: 6
Running Power Factor: 0.90
Starting Power Factor: 0.70 Efficiency: 0.66
Loaded (Clutched during start)

Step Starting kVA (Vector Sum): 6.58 **Allowable Step Voltage Dip: 30%**

Summary

Runnning Load	49.85 kW
	57.73 kVA
Max Starting kVA	135.66 kVA
Allowable Voltage Dip	30%
Average Power Factor	0.86
Worst Case Load Step(Highest SkVA Requirement)	2

Performance of Selected Generator Set(s) at Site Conditions

Site Capability	92 ekW 125 kVA	**Required Running Load**	49.85 kW 57.73 kVA	

Step #	Step Maximum Allowable Voltage Dip	Maximum Allowable Voltage Dip up to the Step	Predicted Instantaneous Voltage Dip	Acceptable Transient Response
1	30%	30%	8%	Y
2	30%	30%	17%	Y
3	30%	30%	6%	Y
4	30%	30%	1%	Y
Intermittent Motor Starting	30%	30%	12%	Y

The load scenario contains a significant amount of nonlinear loads which may cause significant voltage distortion. Consult your Caterpillar Dealer for advice.

Generator Set

Generator Set Model	D100P1		
Factory Rating	110 ekW 138 kVA	**Frequency**	60 Hz
Voltage	480	**Duty Cycle**	Standby
Site Alternator Temp Rise	270 F	**Load Connection**	3 Phase
Phase	3 Phase		

Engine

Engine Model	1006TG2A	**Fuel**	Diesel
Aspiration	T	**Aftercooler**	None
Engine Speed	1800 RPM		
# of Cylinders	6	**Cylinder Arrangement**	INLINE

Alternator

Frame Size	3034B	**Insulation Class**	H
Excitation	PM		

Notes

1. All performance-related information is listed with respect to the genset running at factory rated power.
2. Standby duty cycle is defined as:

General Information
- Overview
- Specifications
- Performance Data
- Parts List
- Layout Dwg
- Connection Diag
- Product Literature

More Information
- Locate Distributor
- Baldor Sales Offices

Return to List

AC Motors | Premium Efficiency | Three Phase | 30.00 HP | 1400-1800 RPM | 230/460 Volt |

Specifications: EM2535T

Catalog Number:	EM2535T
Specification Number:	40G048W942
Horsepower:	30
Voltage:	230/460
Hertz:	60
Phase:	3
Full Load Amps:	70/35
Usable at 208 Volts:	74.1
RPM:	1770
Frame Size:	286T
Service Factor:	1.15
Rating:	40C AMB-CONT
Locked Rotor Code:	G
NEMA Design Code:	B
Insulation Class:	F
Full Load Efficiency:	94.1
Power Factor:	85
Enclosure:	OPSB
Baldor Type:	4052M
DE Bearing:	6311
ODE Bearing:	6309
Electrical Specification Number:	40WGW942
Mechanical Specification Number:	40G48
Base:	RG
Mounting:	F1

* For certified information, contact your local Baldor office.

Copyright © 2001-2005 Baldor Electric Company. All rights reserved.
This site works best with Internet Explorer and Netscape 4.x and above.

BALDOR
MOTORS • DRIVES • GENERATORS

Product Quick Search
EM2535T
GO

General Information

- Overview
- Specifications
- Performance Data
- Parts List
- Layout Dwg
- Connection Diag
- Product Literature

More Information

- Locate Distributor
- Baldor Sales Offices

Return to List

AC Motors | Premium Efficiency | Three Phase | 30.00 HP | 1400-1800 RPM | 230/460 Volt |

Performance Data: EM2535T

Product Nameplate Data :

Rated Output	30 HP	Hertz	60	NEMA Nom. Eff.	94.1
Volts	230/460	Phase	3	Power Factor	85
Full Load Amps	70/35	NEMA Design Code	B	Service Factor	1.15
Speed	1770	LR KVA Code	G	Rating - Duty	40C AMB-CONT

(Typical performance - Not guaranteed values)

General Characterstics at 460 V, 60 Hz, 30 HP

Full Load Torque	88.9 LB-FT	Starting Current	223.6 Amps
Start Configuration	DOL	No-Load Current	13.32 Amps
Break Down Torque	272 LB-FT	Line-line Resistance @ 25° C	0.237 Ohms
Pull-Up Torque	127 LB-FT	Temperature Rise, C @ FL (in deg)	31
Locked-Roter Torque	149 LB-FT	Temp. Rise @ S.F. Load (in deg)	40

Load Characteristics at 460 V, 60 Hz , 30 HP

% of Rated Load	25	50	75	100	125	150	S.F.
Power Factor	50	72	82	85	87	87	86
Efficiency	90.3	93.6	94.2	94.1	93.6	92.7	93.8
Speed (rpm)	1792	1785	1777	1769	1761	1752	1765
Line Amperes	15.5	20.75	27.37	34.9	43	52.1	39.7

* For certified information, contact your local Baldor office.

Copyright © 2001-2005 Baldor Electric Company. All rights reserved.
This site works best with Internet Explorer and Netscape 4.x and above.

3

FLAGSTAFF MEADOWS SITE 2 WWTP

PHYSICAL LOCATION

LOCATED 550' NORTHWEST OF THE INTERSECTION OF
HUGHES AVE AND SHADOW MOUNTAIN DR
BELLEMONT, ARIZONA
LATTITUDE: 35°14'21" NORTH
LONGITUDE: 111°49'23" WEST
T22N, R5E, SECTION 36
GILA AND SALT RIVER BASELINE AND MERIDIAN

PROJECT OWNER

Utility Source L.L.C.
721 East San Pedro
Gilbert, Arizona 85234
Phone: (480) 892-8756
Fax: (480) 892-3387

FACILITY DESIGNER

Santec Corporation
220 Malibu Street
Castle Rock, CO 80109
Phone: (303) 660.9211
Fax: (303) 660.2180

DRAWING INDEX

SHEET #	SHEET TITLE
1	PLAN INDEX
2	PHASING
3	WWTP WITH TOPO
4	PROCESS FLOW DIAGRAM
5	VESSEL AND MANWAY SCHEDULE
6	GRAVITY LINE DETAIL
7	PROCESS FEED DETAIL
8	RECYCLE LINE DETAIL
9	SKIMMER/SUPERNATANT DETAIL
10	AIRLINE DETAIL
11	CONDUIT DETAIL
12	BUILDING LAYOUT

APPROXIMATE SITE LOCATION

SYMBOL LEGEND	
	BELLSPIGOT 45 DEGREE ELBOW
	BELLSPIGOT 90 DEGREE ELBOW
	BELLSPIGOT TEE
	BELLSPIGOT BUSHING
	BELLSPIGOT CONCENTRIC BUSHING
	BELLSPIGOT CHECK VALVE
	BELLSPIGOT GLOBE VALVE
	BELLSPIGOT GATE VALVE
	FLANGED FLOW METER
	FLANGED CHECK VALVE
	FLANGED GATE VALVE
	ACTUATED GATE VALVE
	DIRECTION OF FLOW SYMBOL
AIR — AIR	CPVC SCH 40 OR EQUAL
FM — FM PF — PF	PVC SCH 40 OR EQUAL
GRAVITY — GRAVITY	PVC SDR35 OR EQUAL
REJ SUPER	PVC DWV OR EQUAL
3"RAS 3"MLR	PVC DWV OR EQUAL
4"RAS 4"MLR	PVC SDR35 OR EQUAL
SKIM	PVC SDR35 OR EQUAL
METH CHLOR	3/8" x 1/4" LDPE TUBING

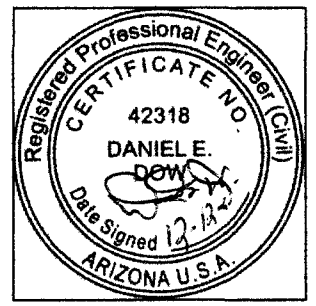

FLAGSTAFF MEADOWS SITE 2
BELLEMONT, ARIZONA
PLAN INDEX

SANTEC CORPORATION
CASTLE ROCK, COLORADO
PHONE: 303.660.9211 FAX: 303.660.2180

DATE: 11-25-05
DRAWN BY: NAW
REV: REV 1.0
SHEET #: 1

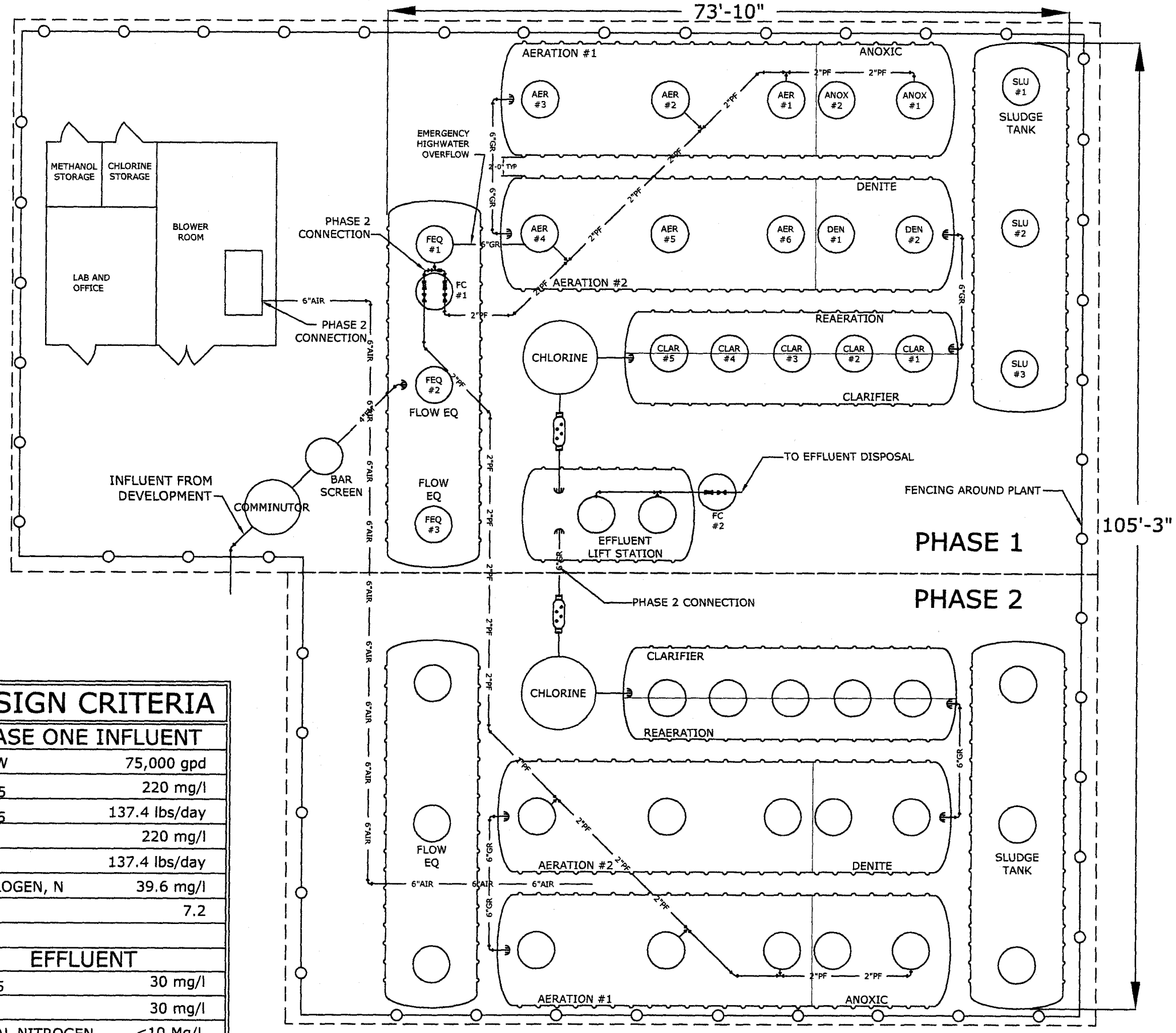

DESIGN CRITERIA	
PHASE TWO INFLUENT	
FLOW	75,000 gpd
BOD_5	220 mg/l
BOD_5	137.4 lbs/day
TSS	220 mg/l
TSS	137.4 lbs/day
NITROGEN, N	39.6 mg/l
pH	7.2
EFFLUENT	
BOD_5	30 mg/l
TSS	30 mg/l
TOTAL NITROGEN	<10 Mg/L
FECAL COLIFORM	<200 CFU

DESIGN CRITERIA	
BUILDOUT INFLUENT	
FLOW	150,000 gpd
BOD_5	220 mg/l
BOD_5	274.9 lbs/day
TSS	220 mg/l
TSS	274.9 lbs/day
NITROGEN, N	39.6 mg/l
pH	7.2
EFFLUENT	
BOD_5	30 mg/l
TSS	30 mg/l
TOTAL NITROGEN	<10 Mg/L
FECAL COLIFORM	<200 CFU

DESIGN CRITERIA	
PHASE ONE INFLUENT	
FLOW	75,000 gpd
BOD_5	220 mg/l
BOD_5	137.4 lbs/day
TSS	220 mg/l
TSS	137.4 lbs/day
NITROGEN, N	39.6 mg/l
pH	7.2
EFFLUENT	
BOD_5	30 mg/l
TSS	30 mg/l
TOTAL NITROGEN	<10 Mg/L
FECAL COLIFORM	<200 CFU

PHASING DETAIL

0 144 288 332

SCALE: 1 in = 144'

Registered Professional Engineer (Civil) CERTIFICATE NO. 42318 DANIEL E. DOIN Date Signed ARIZONA U.S.A.

NOTES:
EMERGENCY CONTACT SIGN TO BE POSTED ON BUILDING,FLOW EQ, AND LIFT STATION

IN CASE OF EMERGENCY CALL:

(928) 606-0498

FLAGSTAFF MEADOWS SITE 2
BELLEMONT, ARIZONA
PHASING DETAIL

Santec
SANTEC CORPORATION
CASTLE ROCK, COLORADO
PHONE: 303.660.9211 FAX: 303.660.2180

DATE: 11-30-05
DRAWN BY: NAW
REV: REV 1.0
SHEET #: 2

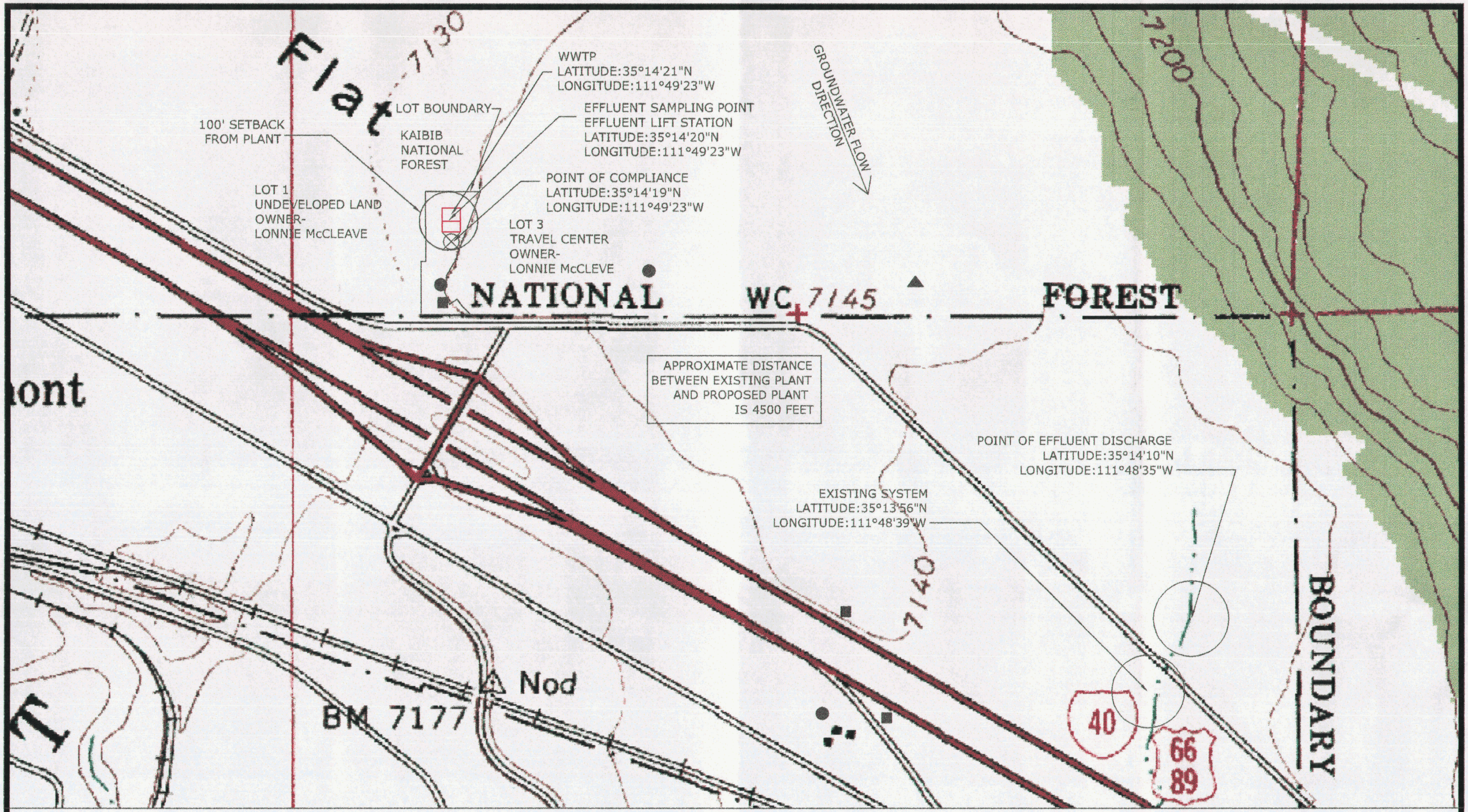

UNITED STATES
DEPARTMENT OF THE INTERIOR
GEOLOGICAL SURVEY

BELLEMONT QUADRANGLE
ARIZONA–COCONINO CO.
7.5 MINUTE SERIES (TOPOGRAPHIC)

ADWR REGESTERED WELLS
- ■ NON EXEMPT WELL
- ● EXEMPT WELL
- ▲ MONITOR WELL

0 500 1000 1500
SCALE: 1 in = 500'

N

FLAGSTAFF MEADOWS SITE 2
BELLEMONT, ARIZONA
WWTP WITH TOPO

SANTEC CORPORATION
CASTLE ROCK, COLORADO
PHONE: 303.660.9211 FAX: 303.660.2180

DATE: 12-5-05
DRAWN BY: NAW
REV: REV 1.0
SHEET #: 3

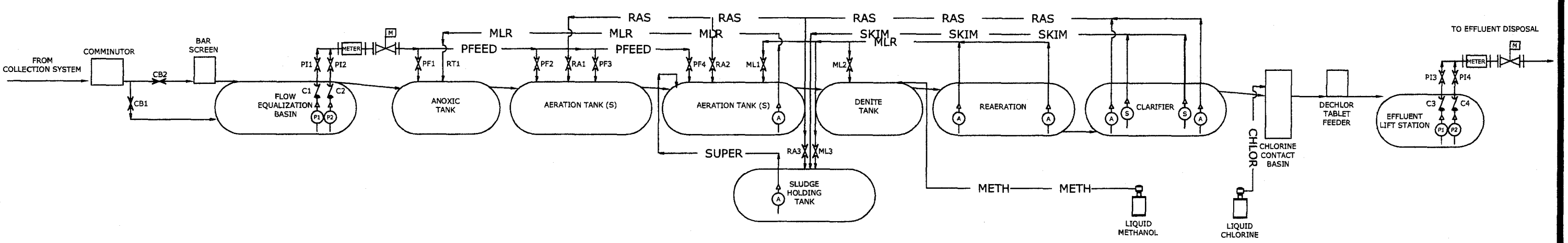

HYDRAULIC LINES AND VALVES, N.T.S.

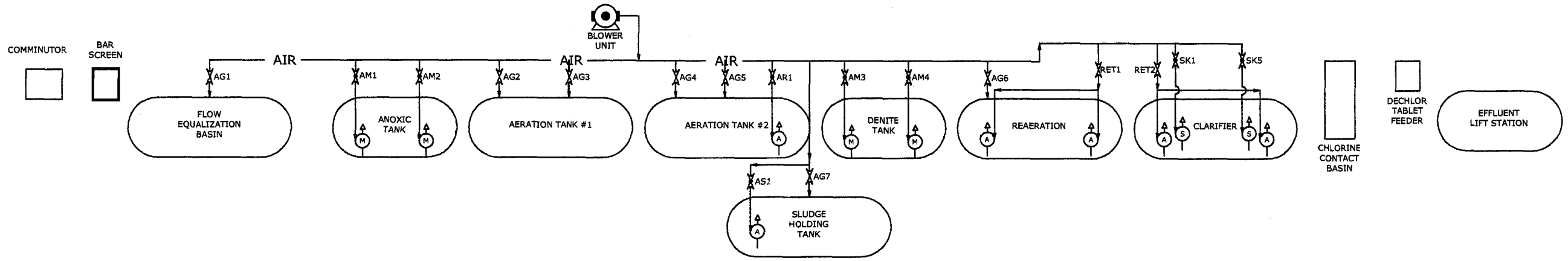

AIR LINES AND VALVES, N.T.S.

AIR AIR AIR	PROCESS AIR LINE
CHLOR CHLOR	CHLORINE FEED LINE
GR GR GR	GRAVITY OVERFLOW LINE
METH METH	METHANOL FEED LINE
MLR MLR	MIXED LIQUOR RETURN LINE
PFEED PFEED	PROCESS FEED LINE
RAS RAS	RETURN ACTIVATED SLUDGE LINE
SKIM SKIM	SKIMMER WASTE LINE
SUPER SUPER	SUPERNATANT RETURN LINE

	BALL VALVE
	GATE VALVE
	CHECK VALVE
A	AIRLIFT PUMP, RECYCLE TYPE
M	AIRLIFT PUMP, MIXER TYPE
S	AIRLIFT PUMP, SKIMMER TYPE
P#	PUMP, CENTRIFUGAL
M	ECCENTRIC PLUG VALVE, MOTORIZED
METER	FLOW METER, MAGNETIC

SYMBOL LEGEND

NOTES:
1) VESSELS SHOWN ARE SCHEMATIC ONLY.

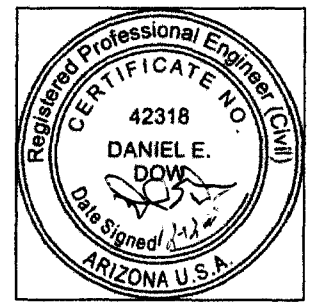

FLAGSTAFF MEADOWS SITE 2
BELLEMONT, ARIZONA
PROCESS FLOW DIAGRAM

Santec
SANTEC CORPORATION
CASTLE ROCK, COLORADO
PHONE: 303.660.9211 FAX: 303.660.2180

DATE: 12-5-05
DRAWN BY: NAW
REV:
SHEET #: 4

TANK SCHEDULE			
VESSEL	LENGTH	DIA.	VOLUME
FLOW EQ	40'-0"	10'-0"	19,532 GAL
ANOXIC	15'-0"	12'-0"	11,680GAL
AERATION #1	34'-0"	12'-0"	27,132 GAL
AERATION #2	34'-0"	12'-0"	27,132 GAL
DENITE	15'-0"	12'-0"	11,680 GAL
REAERATION	36'-0"	10'-0"	7,778 GAL
CLARIFIER	36'-0"	10'-0"	10,044 GAL
SLUDGE	40'-0"	10'-0"	22,736GAL
CHLORINE	12'-6"	8'-0"	2,324 GAL
EFFLUENT LIFT	16'-5"	12'-0"	7,733 GAL

MANWAY SCHEDULE			
MANWAY #	LENGTH	DIA.	QUANTITY
FLOW EQ	3'-0"	4'-0"	3
ANOXIC	2'-0"	4'-0"	2
AERATION #1	2'-0"	4'-0"	3
AERATION #2	2'-6"	4'-0"	3
DENITE	2'-6"	4'-0"	2
CLARIFIER	3'-0"	4'-0"	5
SLUDGE	3'-0"	4'-0"	3
FLOW CONTROL	2'-0"	4'-0"	2

NOTES: FOR TANK CROSS-SECTION DETAILS, SEE SANTEC STANDARDS SECTION

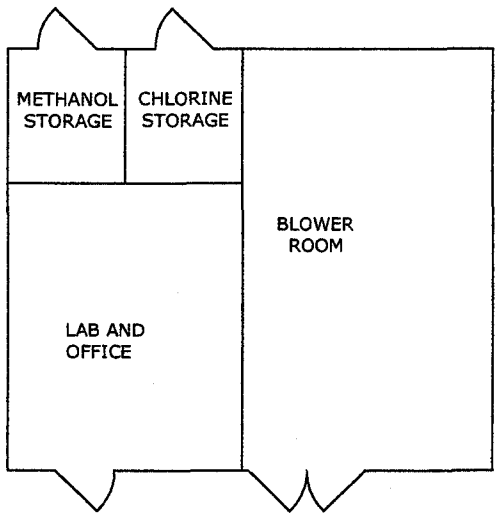

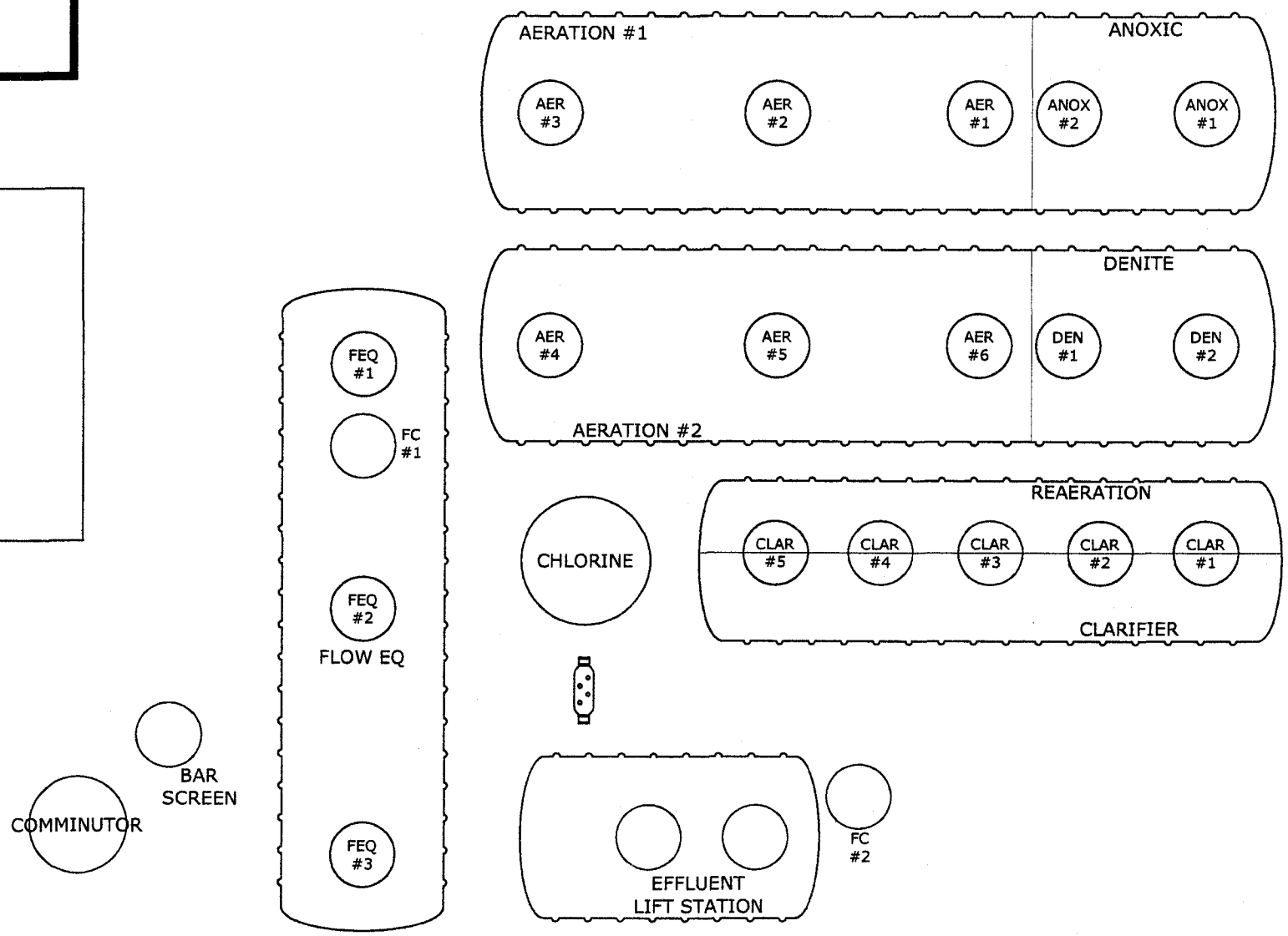

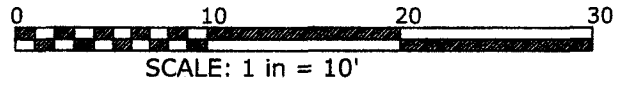

FLAGSTAFF MEADOWS SITE 2
BELLEMONT, ARIZONA
VESSEL AND MANWAY SCHEDULE

SANTEC CORPORATION
CASTLE ROCK, COLORADO
PHONE: 303.660.9211 FAX: 303.660.2180

DATE: 11-30-05
DRAWN BY: NAW
REV: REV 1.0
SHEET #: 5

VESSEL AND MANWAY SCHEDULE

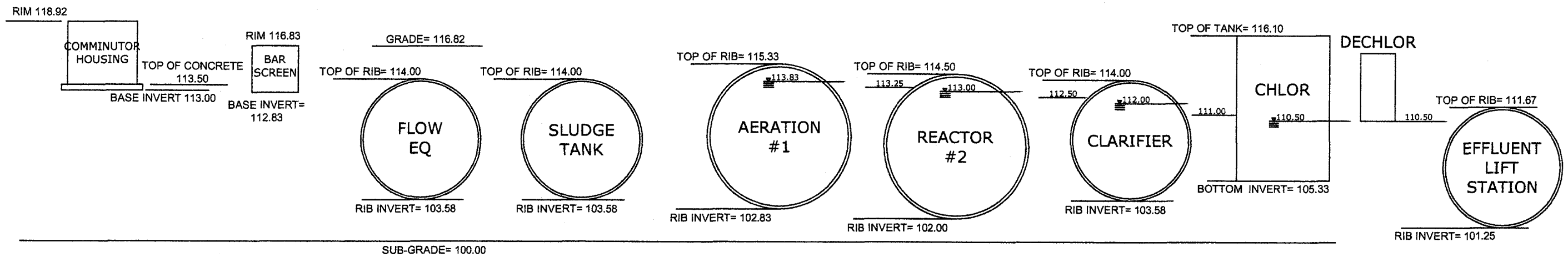

GRAVITY ELEVATION N.T.S.

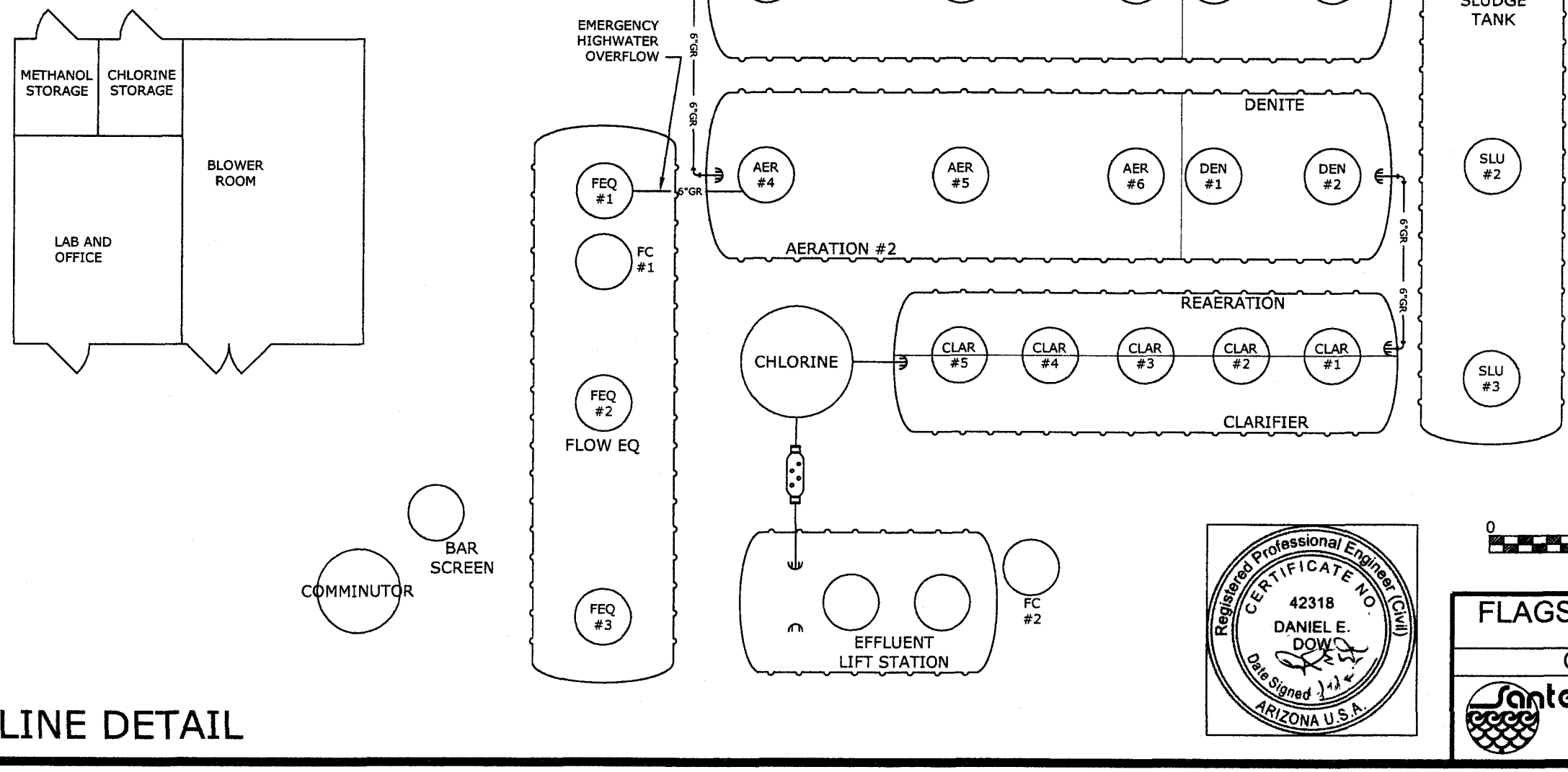

Registered Professional Engineer (Civil)
CERTIFICATE NO
42318
DANIEL E. DOW
Date Signed
ARIZONA U.S.A.

GRAVITY LINE DETAIL

FLAGSTAFF MEADOWS SITE 2
BELLEMONT, ARIZONA
GRAVITY LINE DETAIL

Santec
SANTEC CORPORATION
CASTLE ROCK, COLORADO
PHONE: 303.660.9211 FAX: 303.660.2180

DATE:	11-30-05
DRAWN BY:	NAW
REV:	REV 1.0
SHEET #:	6

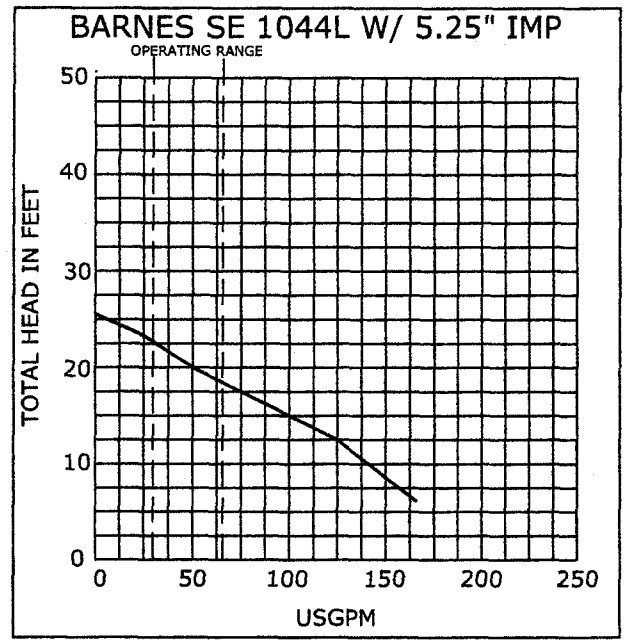

PUMP SCHEDULE

PUMP MODEL	BARNES SE1044L
DISCHARGE	2"
FLOW	65 GPM
TDH	21'
SPEED	1,750 RPM
HORSEPOWER	1
ELECTRICAL	460 VAC, 3 PH, 60 HZ
FLA/LRA	2.4/7.7
SOLID SIZE	2"

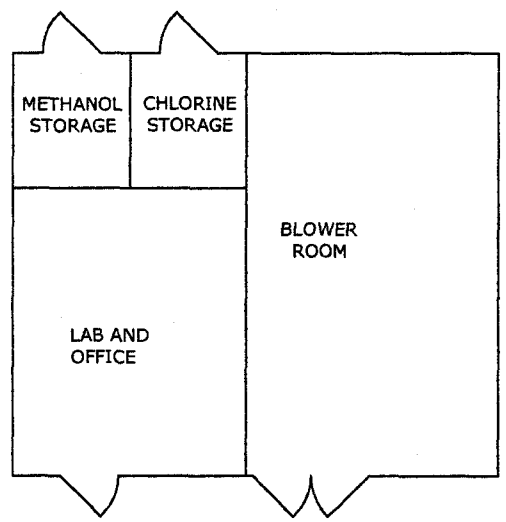

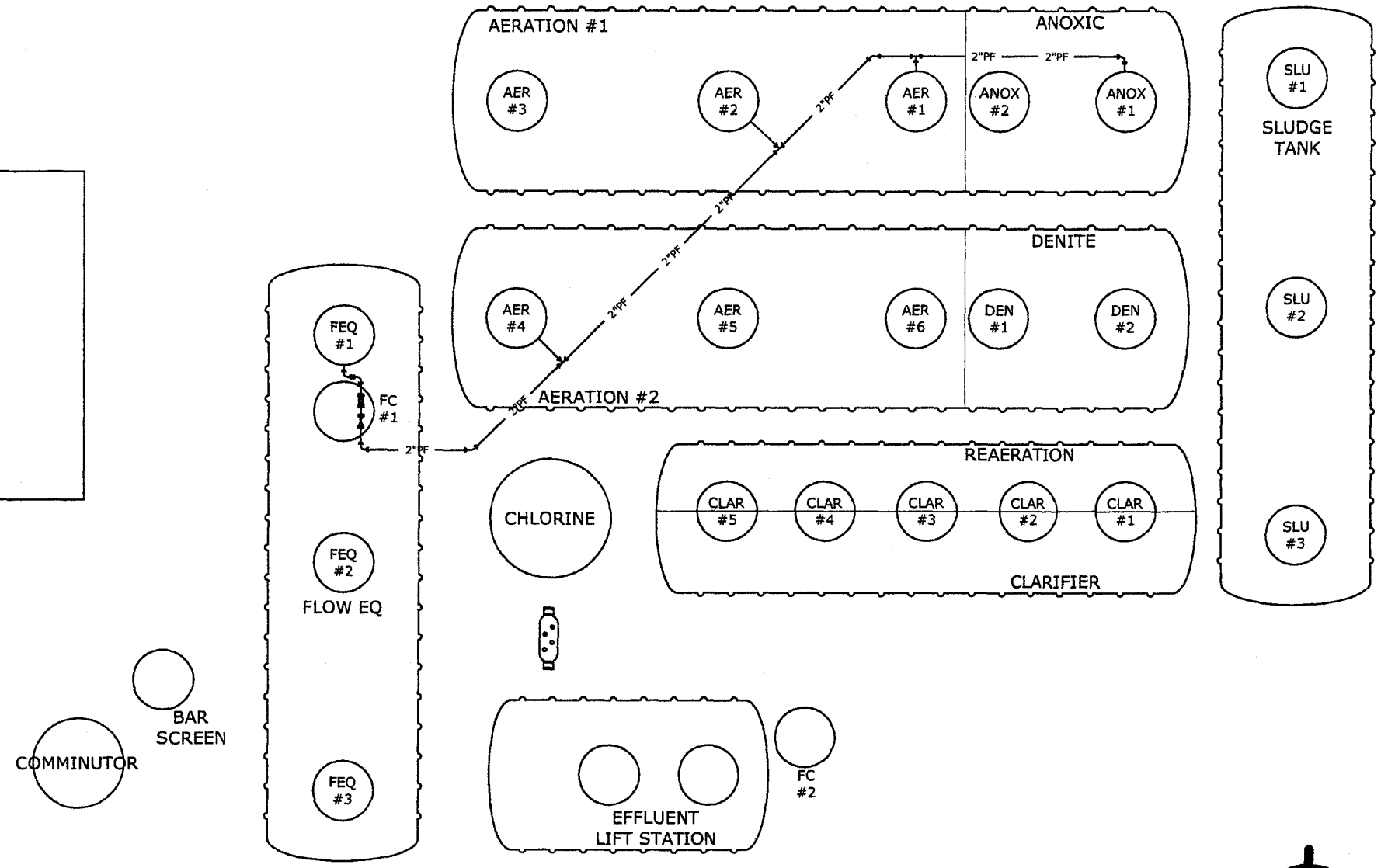

0 10 20 30

SCALE: 1 in = 10'

FLAGSTAFF MEADOWS

BELLEMONT, ARIZONA

PROCESS FEED DETAIL

SANTEC CORPORATION
CASTLE ROCK, COLORADO
PHONE: 303.660.9211 FAX: 303.660.2180

DATE: 11-30-05
DRAWN BY: NAW
REV: REV 1.0
SHEET #: 7

PROCESS FEED DETAIL

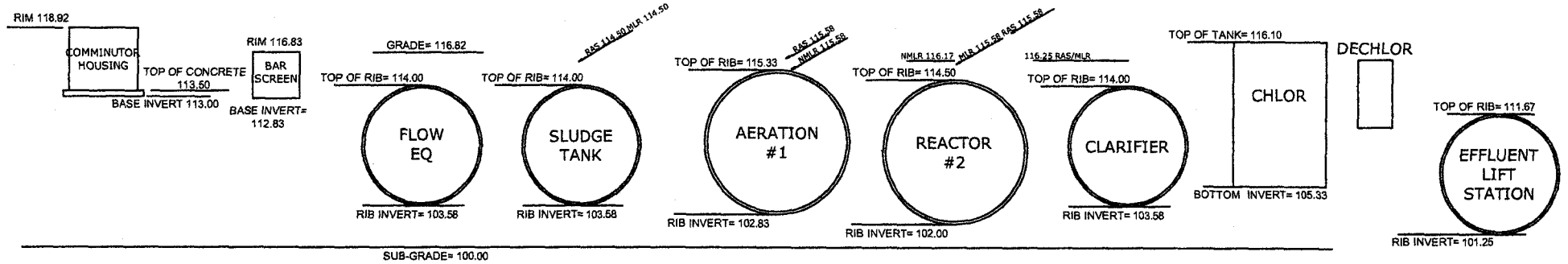

RECYCLE ELEVATION N.T.S.

AIRLIFT SCHEDULE		
VESSEL	TYPE	QUANTITY
FLOW EQ	NONE	0
ANOXIC	MIXER	4
AERATION #1	NONE	0
AERATION #2	NMLR	2
DENITE	MIXER	4
REAERATION	MLR	5
CLARIFIER	SLUDGE/SKIMMER	5/5
SLUDGE	SUPERNATANT	1

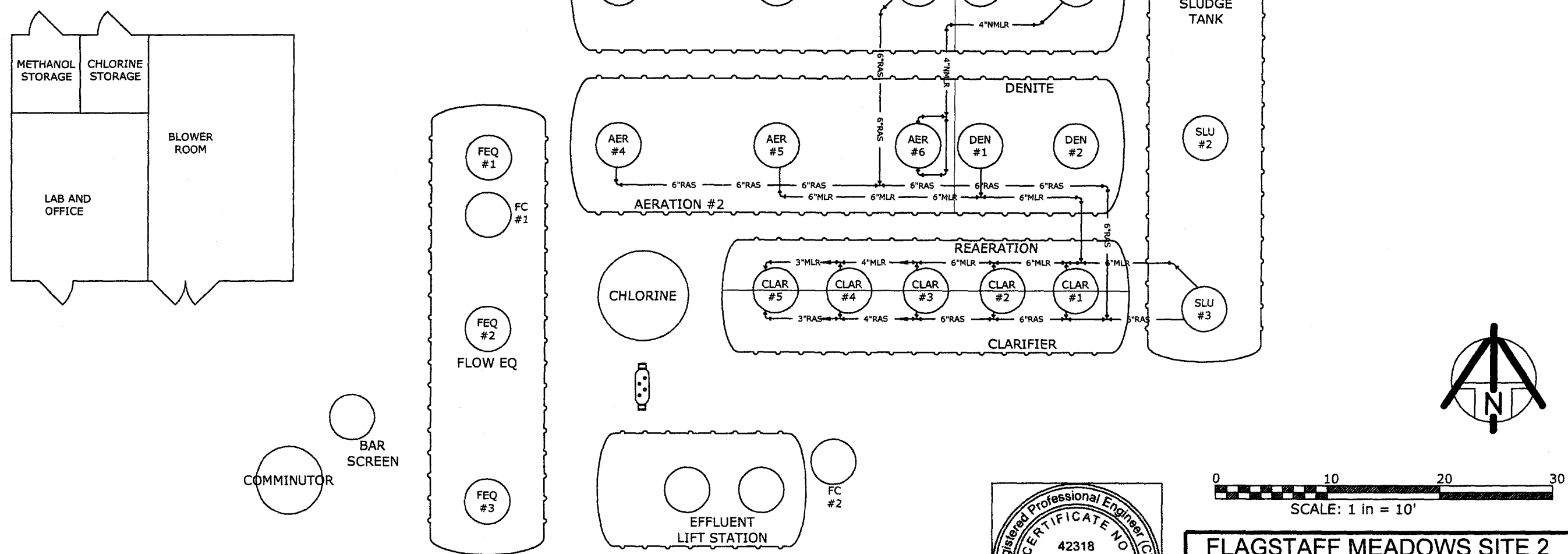

RECYCLE LINE DETAIL

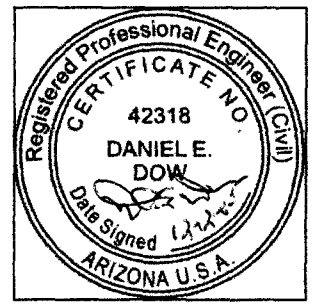

FLAGSTAFF MEADOWS SITE 2
BELLEMONT, ARIZONA
RECYCLE LINE DETAIL

Santec
SANTEC CORPORATION
CASTLE ROCK, COLORADO
PHONE: 303.660.9211 FAX: 303.660.2180

DATE: 11-30-05
DRAWN BY: NAW
REV: REV 1.0
SHEET #: 8

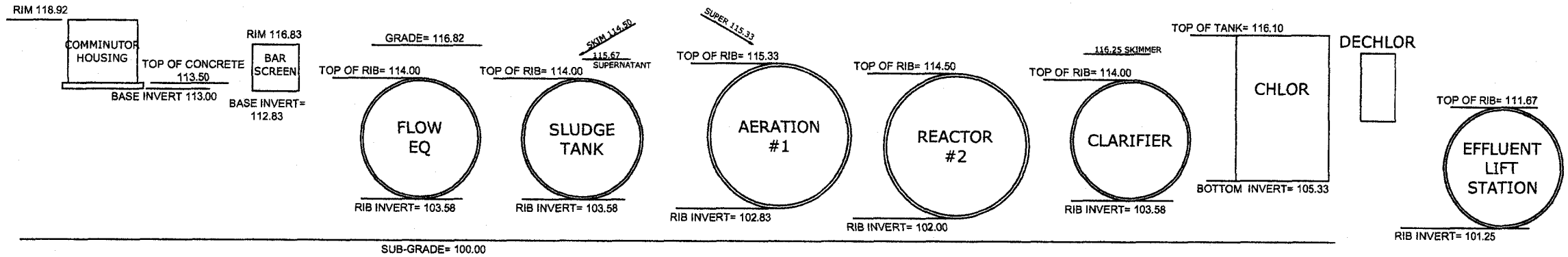

SKIMMER AND SUPERNATANT ELEVATION

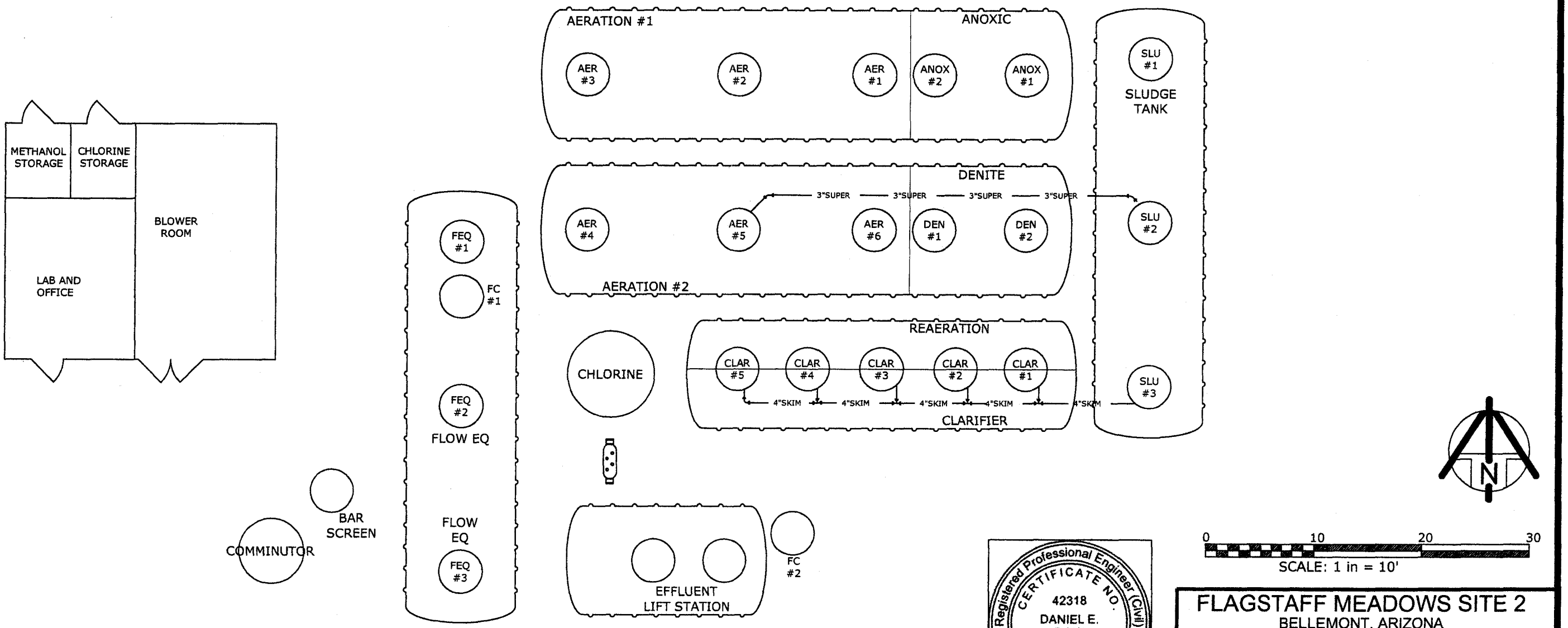

Registered Professional Engineer (Civil)
CERTIFICATE NO.
42318
DANIEL E. DOW
Date Signed 12-1-05
ARIZONA U.S.A.

SKIMMER AND SUPERNATANT DETAIL

FLAGSTAFF MEADOWS SITE 2
BELLEMONT, ARIZONA

SKIMMER/SUPERNATANT DETAIL

Santec
SANTEC CORPORATION
CASTLE ROCK, COLORADO
PHONE: 303.660.9211 FAX: 303.660.2180

DATE: 11-30-05
DRAWN BY: NAW
REV: REV 1.0
SHEET #: 9

DIFFUSER SCHEDULE		
VESSEL	TYPE	QUANTITY
FLOW EQ	SNAP CAP	5
ANOXIC	NONE	0
AERATION #1	FLEX-DISC	22
AERATION #2	FLEX-DISC	22
DENITE	NONE	0
REAERATION	SNAP CAP	15
CLARIFIER	NONE	0
SLUDGE	SNAP CAP	5
CHLORINE	SNAP CAP	2

PROCESS BLOWER DATA	
MAKE/MODEL	ROOTS/DRESSER 615 -U-RAI
FLOW - SCFM/ACFM	509/764
DISCHARGE PRESSURE	5.5 PSIG
BLOWER RPM	1406
BRAKE HORSEPOWER	25 HP
ELECTRICAL SERVICE	460 , 3 PH, 60 HZ
MOTOR	30 HP
FLA/LRA	35/223.6

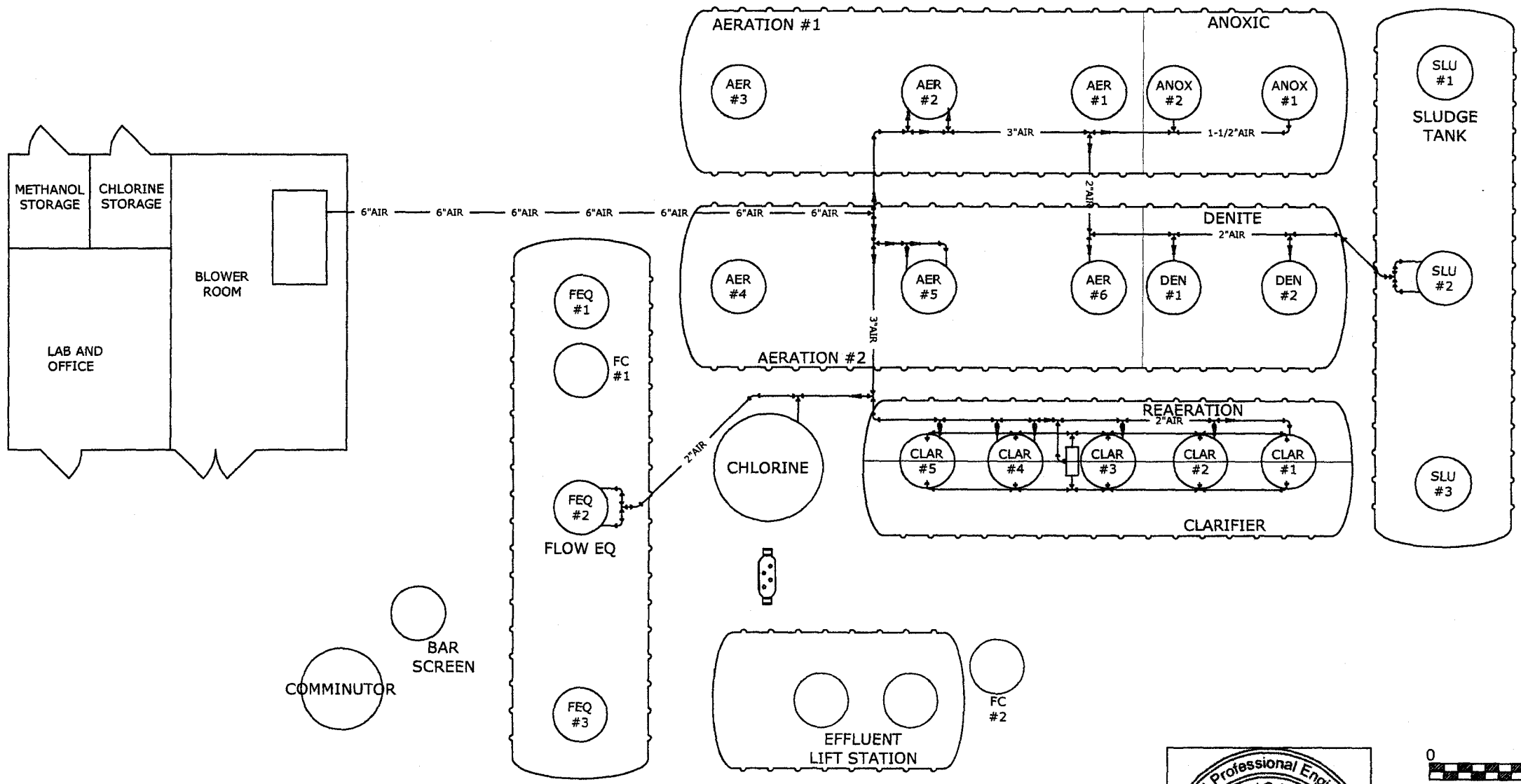

0 10 20 30

SCALE: 1 in = 10'

Registered Professional Engineer (Civil) CERTIFICATE NO. 42318 DANIEL E. DOW Date Signed 11-22-05 ARIZONA U.S.A.

FLAGSTAFF MEADOWS SITE 2

BELLEMONT, ARIZONA

AIRLINE DETAIL

Santec
SANTEC CORPORATION
CASTLE ROCK, COLORADO
PHONE: 303.660.9211 FAX: 303.660.2180

DATE: 11-30-05
DRAWN BY: NAW
REV: REV 1.0
SHEET #: 10

AIRLINE DETAIL

WIRE IN CONDUIT		
CONDUIT #	SIZE	CONTENTS
①	1"	8-#12 AND 4-#14 POWER
②	3/4"	LEVEL CONTROL PROBE WIRE
③	3/4"	1-SHEILD #18
④	3/4"	METHANOL LDPE TUBING
⑤	3/4"	CHLORINE LDPE TUBING
⑥	1"	8-#12 AND 4-#14 POWER
⑦	3/4"	LEVEL CONTROL PROBE WIRE
⑧	3/4"	4-#12 THHN POWER WIRE

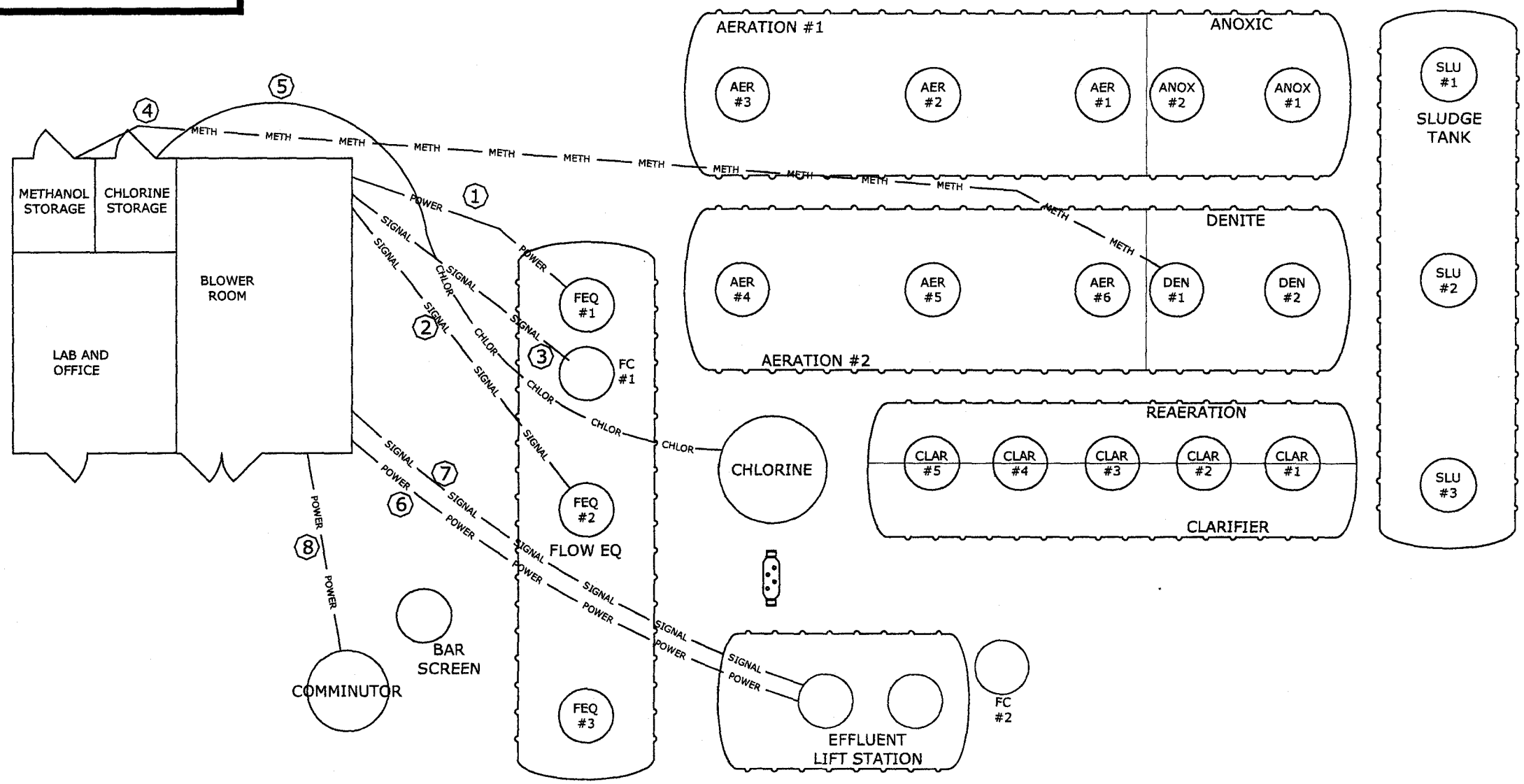

Registered Professional Engineer (Civil)
CERTIFICATE NO.
42318
DANIEL E. DOW
Date Signed 11-30-05
ARIZONA U.S.A.

FLAGSTAFF MEADOWS SITE 2
BELLEMONT, ARIZONA
CONDUIT AND CHEMICAL DETAIL

Santec
SANTEC CORPORATION
CASTLE ROCK, COLORADO
PHONE: 303.660.9211 FAX: 303.660.2180

DATE: 11-30-05
DRAWN BY: NAW
REV: REV 1.0
SHEET #: 11

CONDUIT AND CHEMICAL DETAIL

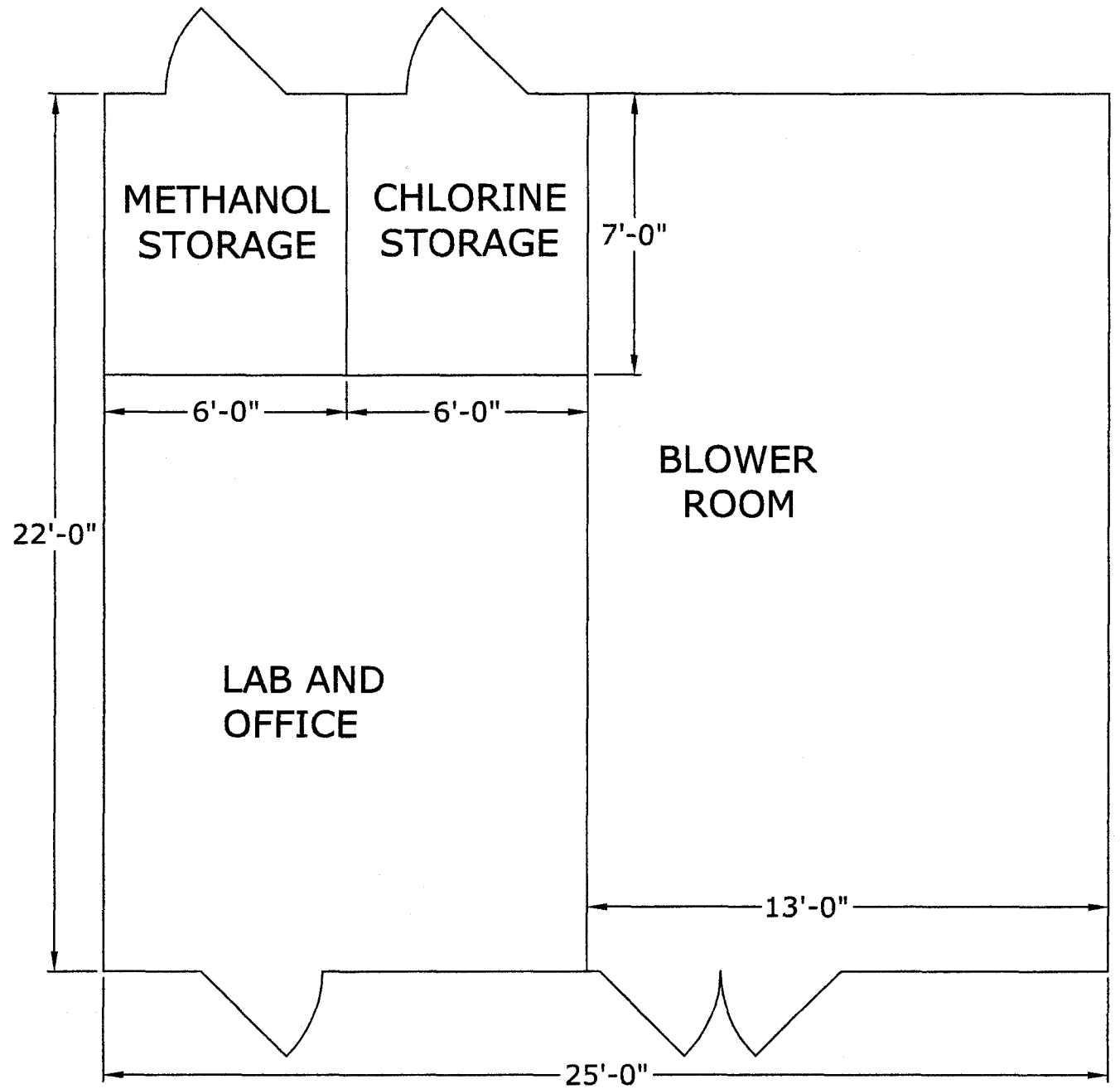

0 4 8 12

SCALE: 1/4 in = 1'

FLAGSTAFF MEADOWS SITE 2

BELLEMONT, ARIZONA

BUILDING LAYOUT

SANTEC CORPORATION
CASTLE ROCK, COLORADO
PHONE: 303.660.9211 FAX: 303.660.2180

DATE: 11-30-05
DRAWN BY: NAW
REV: REV 1.0
SHEET #: 12

BUILDING LAYOUT

4

TABLE OF CONTENTS SECTION 4

FLAGSTAFF MEADOWS SITE 2 WWTP

WASTEWATER TREATMENT PLANT DESIGN REPORT AND SUBMITTAL

4.1 SANTEC STANDARDS

- SS-11 COMMINUTOR
- SS-12 BAR SCREEN
- SS-20 FLOW EQ
- SS-21 FLOW CONTROL MANWAY
- SS-40 ANOXIC/AERATION
- SS-40 AERATION/DENITE
- SS-50 CLARIFIER
- SS-60 DISINFECTION
- SS-70 SLUDGE TANK
- SS-80 EFFLUENT LIFT STATION

4.2 CONSTRUCTION DETAILS

- CD1 DIFFUSER MEASUREMENT
- CD2 DIFFUSER INSTALLATION
- CD3 AIRLIFT CONSTRUCTION
- CD4 AIRLIFT MOUNTING
- CD5 MOUNTING WIER
- CD6 CONSTRUCTION DETAILS
- CD7 INSTALLING MANWAYS
- CD8 FLOW EQ CONSTRUCTION
- CD9 AIRLINE / FORCED MAIN DETAIL
- CD10 TANK INSTALLATION 1
- CD11 TANK INSTALLATION 2

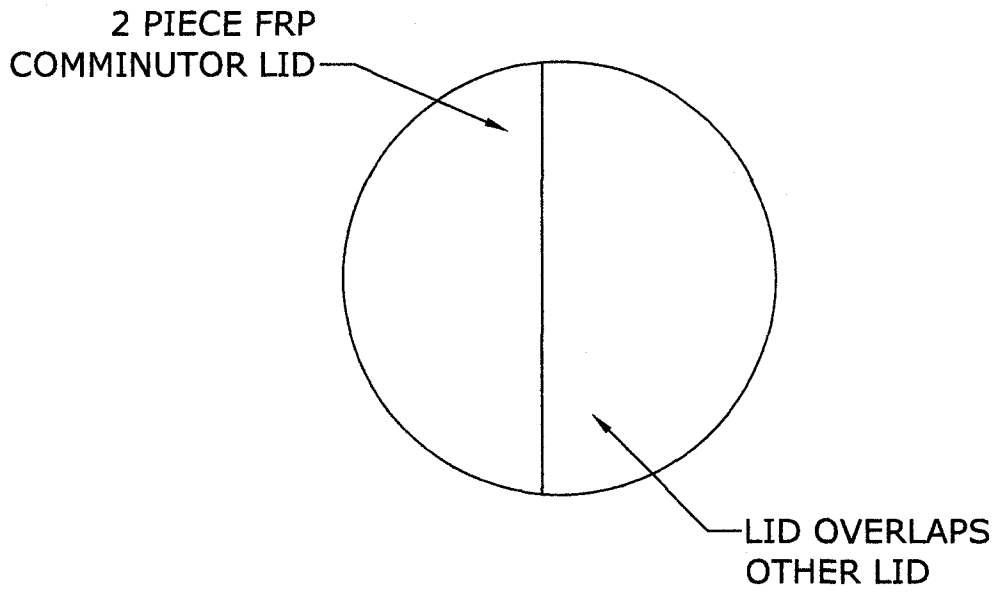

COMMINUTOR 2 PIECE LID DETAIL

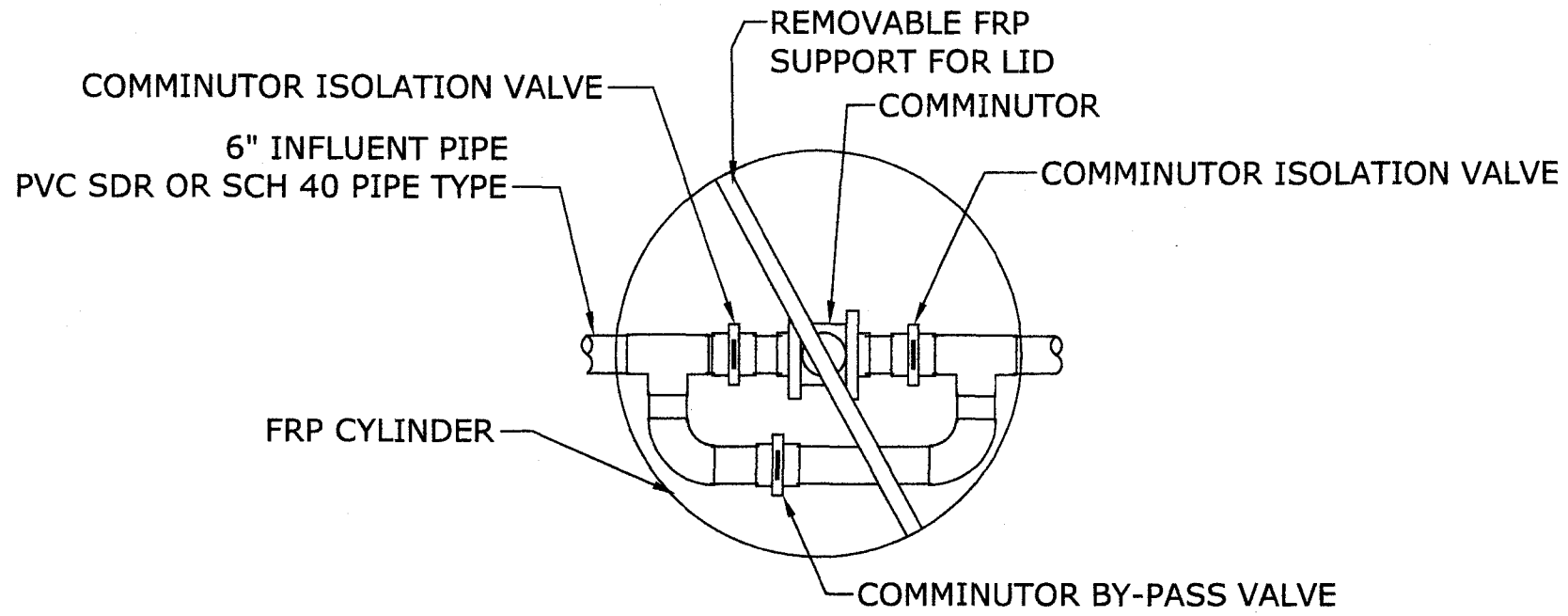

COMMINUTOR PLAN VIEW

FRANKLIN MILLER COMMINUTOR	
ITEM	DESCRIPTION
SIZE	8" FLANGED
MODEL NUMBER	SUPER SHREDDER 8000
MOTOR HP	5
POWER	230/460V
WEIGHT	500 LBS
CUTTER MATERIAL	T316 STAINLESS STEEL

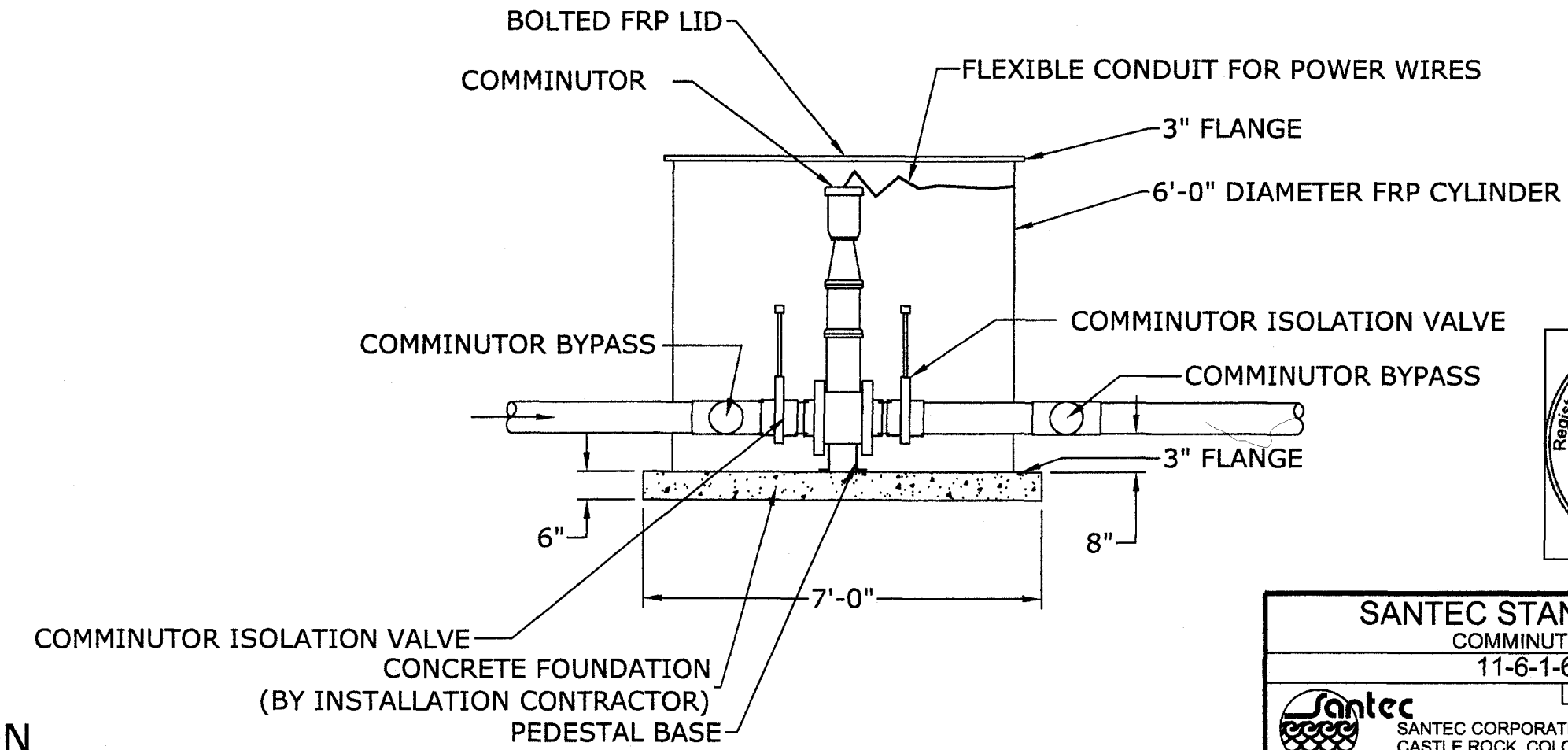

COMMINUTOR ELEVATION

Registered Professional Engineer (Civil)
CERTIFICATE NO.
42318
DANIEL E.
DOM
Date Signed 12-7-05
ARIZONA U.S.A.

SANTEC STANDARDS
COMMINUTOR
11-6-1-6

Santec
SANTEC CORPORATION
CASTLE ROCK, COLORADO
PHONE: 303.660.9211 FAX: 303.660.2180

DATE: 8-3-05
DRAWN BY: NAW
REV: REV 1.0
SHEET #: SS-11

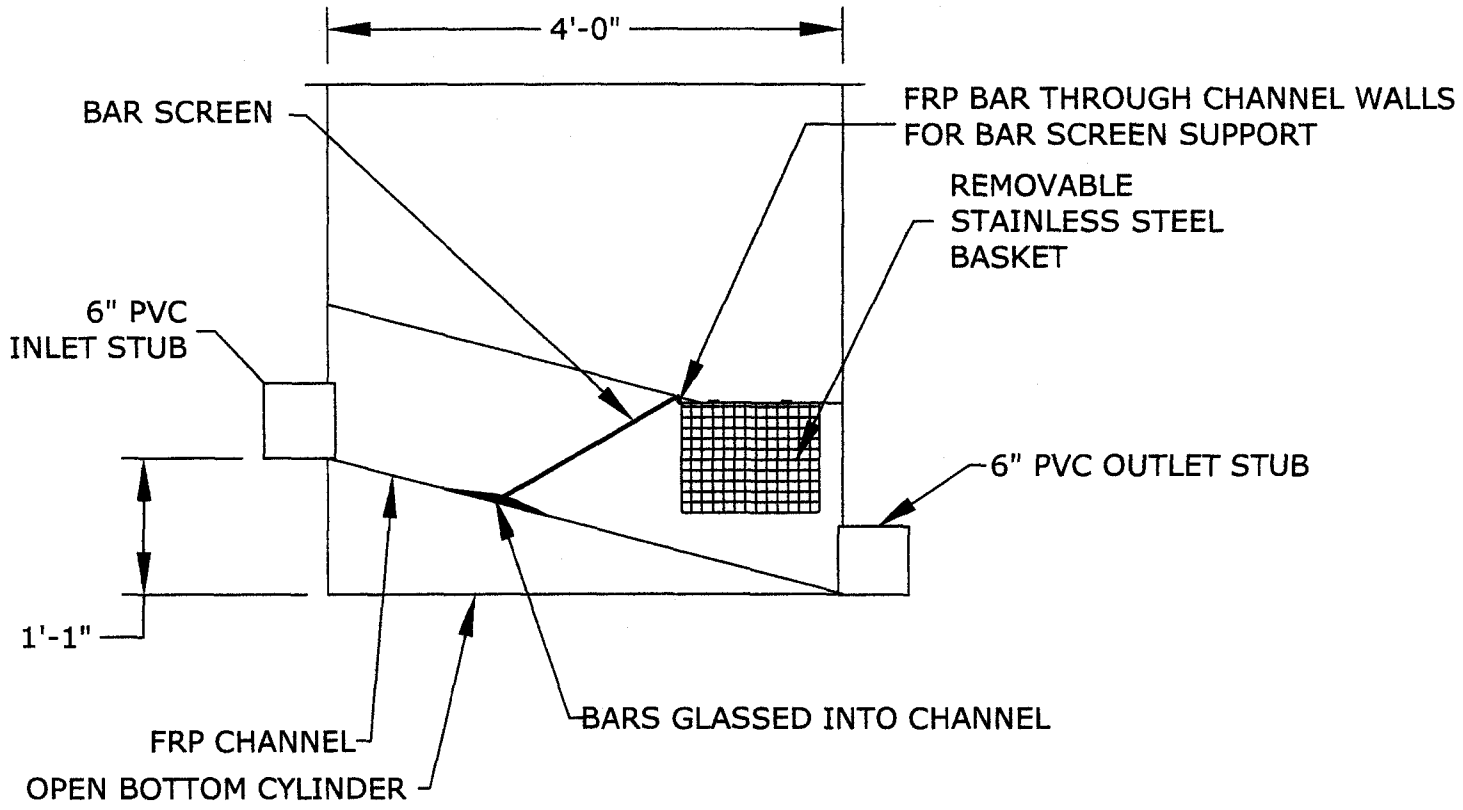

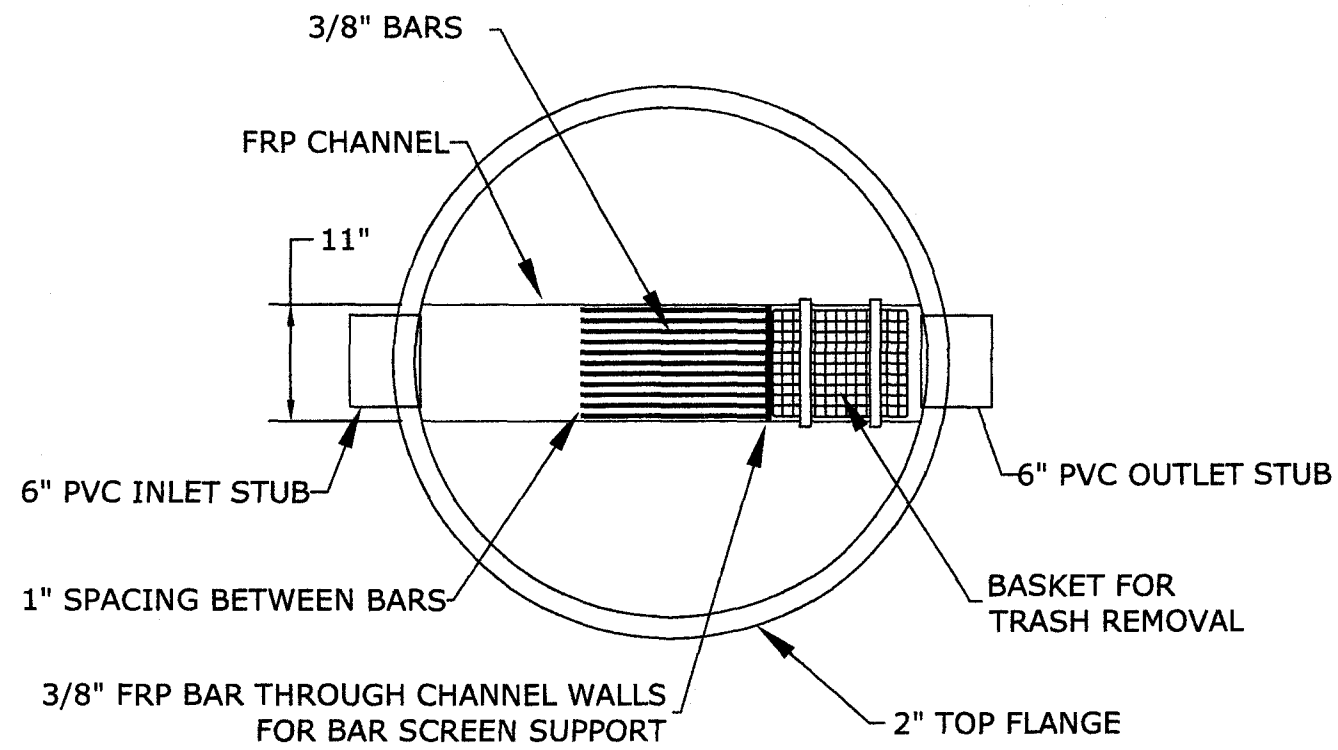

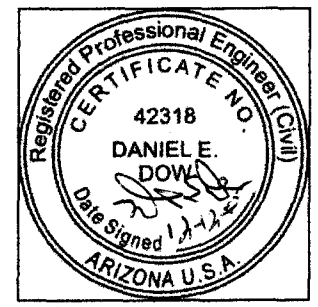

BAR SCREEN DETAIL

SANTEC STANDARDS
BAR SCREEN
12-4-1-6

SANTEC CORPORATION
CASTLE ROCK, COLORADO
PHONE: 303.660.9211 FAX: 303.660.2180

DATE: 8-3-05
DRAWN BY: NAW
REV: REV 1.0
SHEET #: SS-12

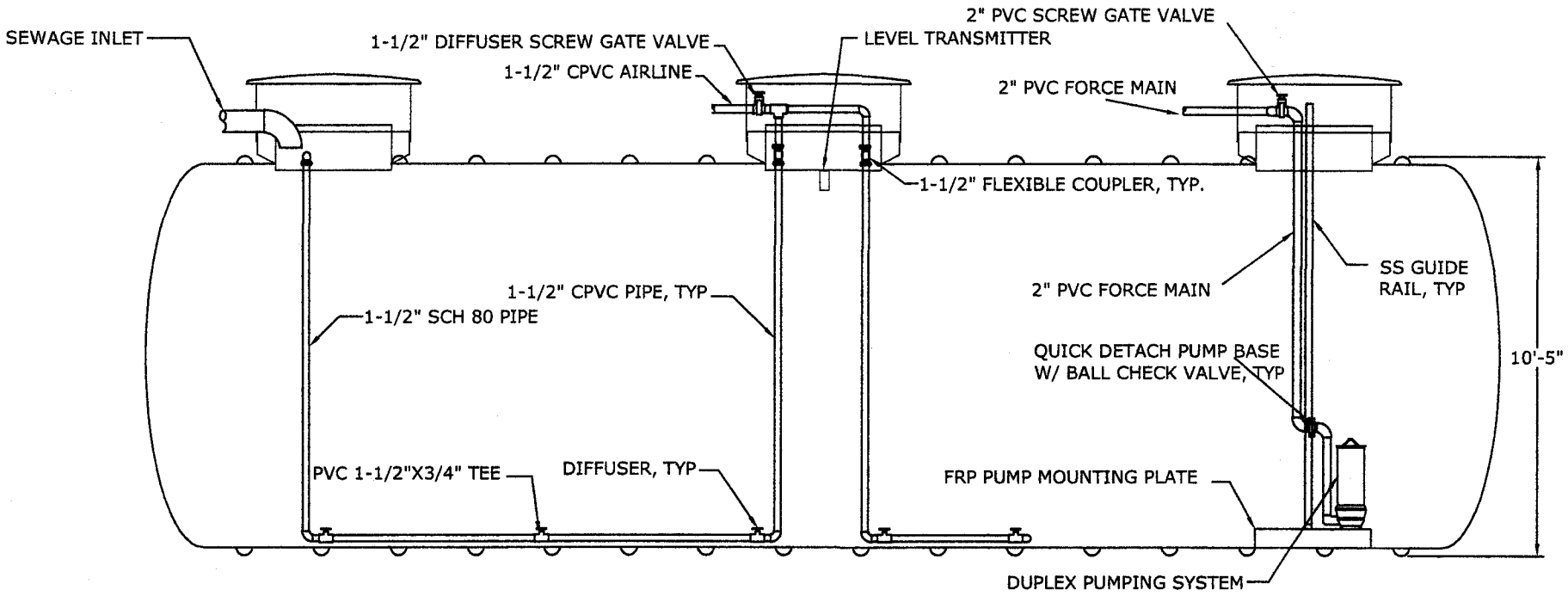

FLOW EQ ELEVATION

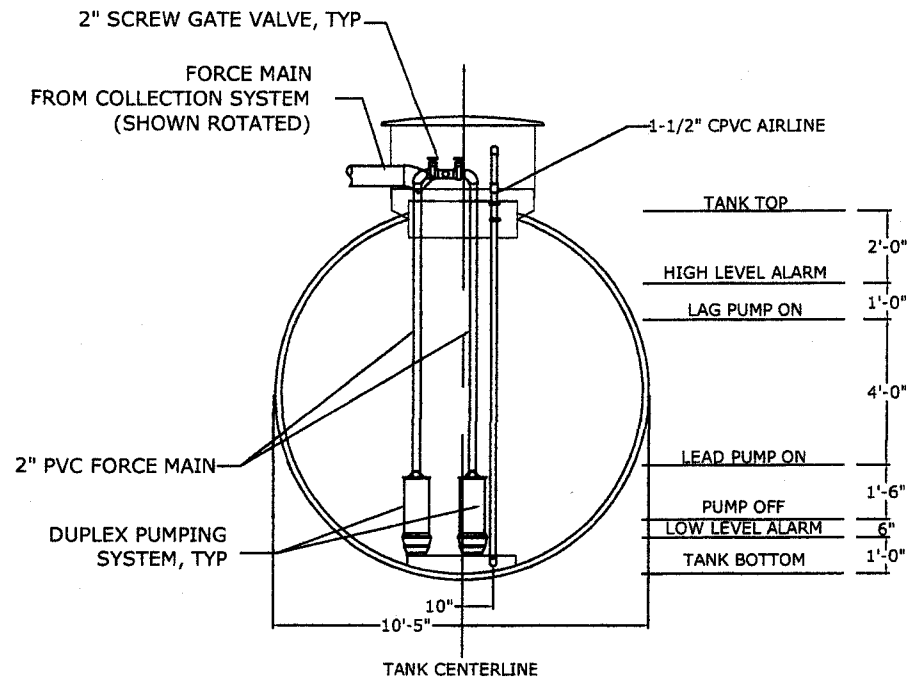

FLOW EQ CROSS SECTION

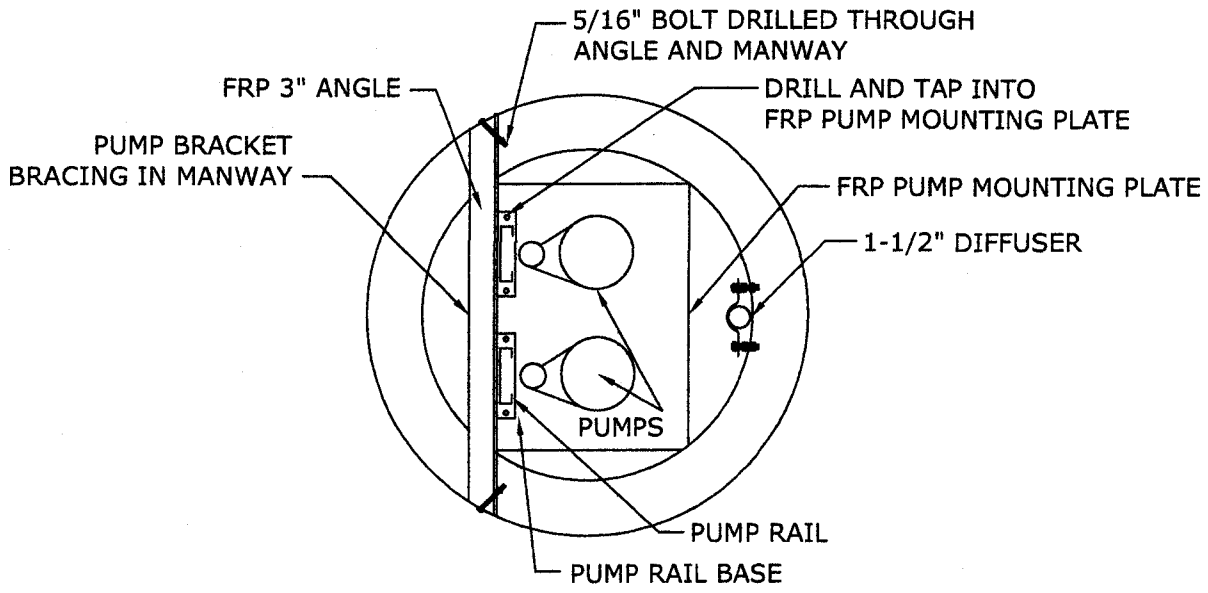

FLOW EQ MANWAY DETAIL

GREYLINE LEVEL CONTROLLER	
ITEM	DESCRIPTION
MODEL	PSL
MAX RANGE	32 FT
ACCURACY	+-0.25% OF RANGE
OUTPUT	ISOLATED 4-20 mA
# CONTROL RELAYS	6
OPERATING TEMP	-5°F - 140°F
SURGE PROTECTION	SENSOR, 4-20 mA, AC POWER
POWER SUPPLY	120v 60Hz 7.5 W MAX
ENCLOSURE	NEMA 4X

SANTEC STANDARDS
FLOW EQ
20-10-3-LC

Santec
SANTEC CORPORATION
CASTLE ROCK, COLORADO
PHONE: 303.660.9211 FAX: 303.660.2180

DATE:	8-3-05
DRAWN BY:	NAW
REV:	REV 1.0
SHEET #:	SS-20

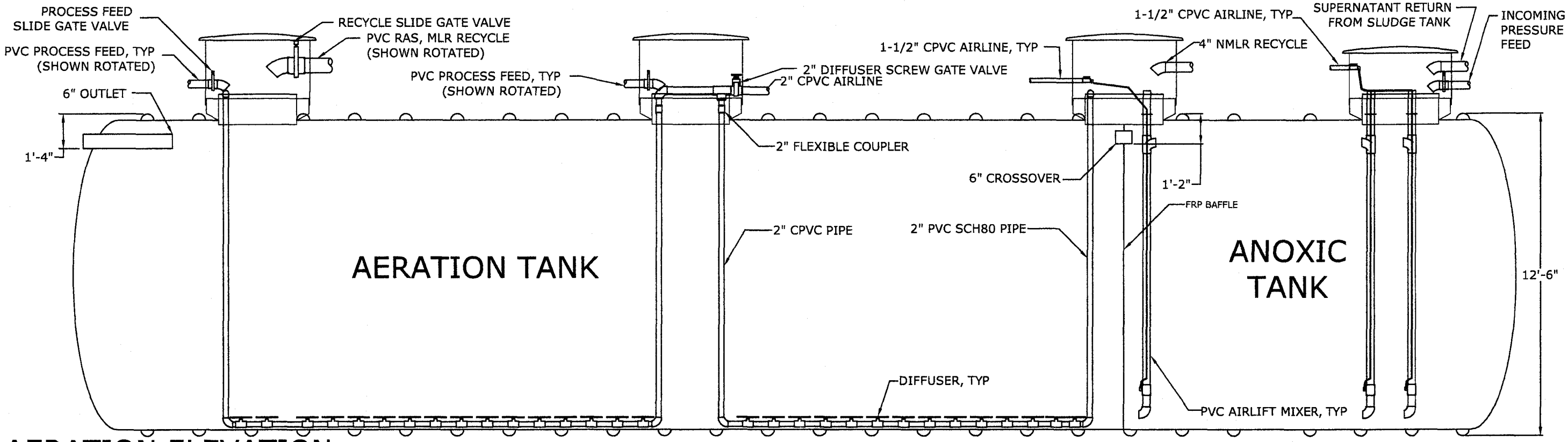

AERATION ELEVATION

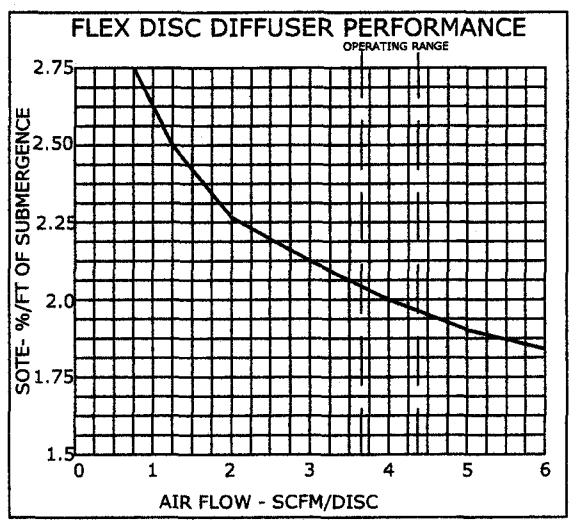

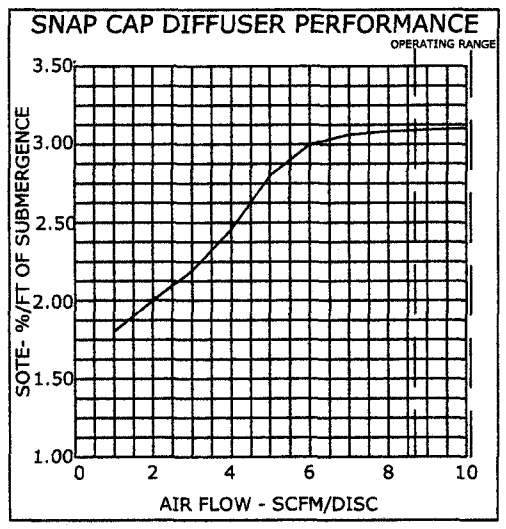

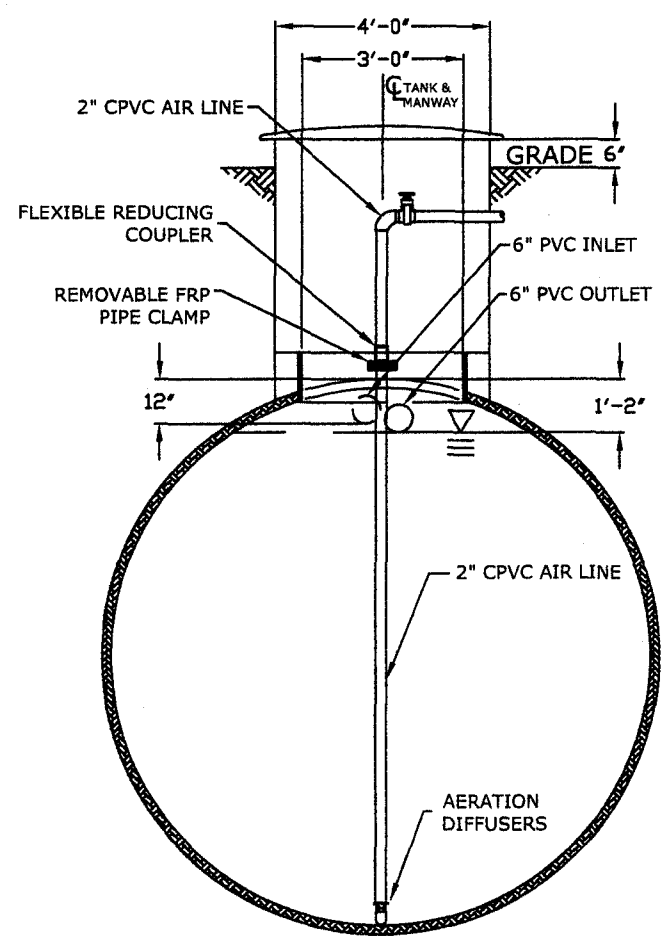

AERATION CROSS SECTION

PIPE LOCATION IN MANWAY

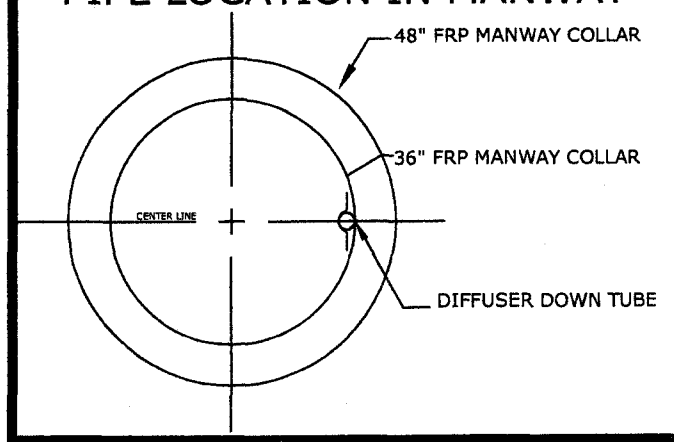

SANTEC STANDARDS

ANOXIC / AERATION TANK

40-12-3-6NCA

SANTEC CORPORATION
CASTLE ROCK, COLORADO
PHONE: 303.660.9211 FAX: 303.660.2180

DATE: 8-3-05
DRAWN BY: NAW
REV: REV 1.0
SHEET #: SS-40

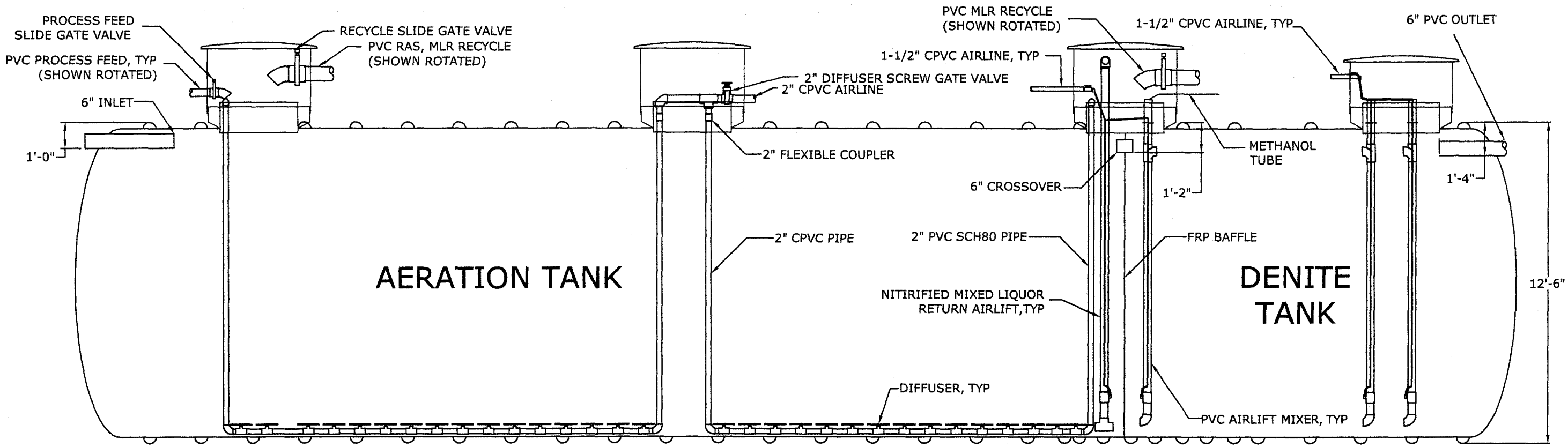

AERATION ELEVATION

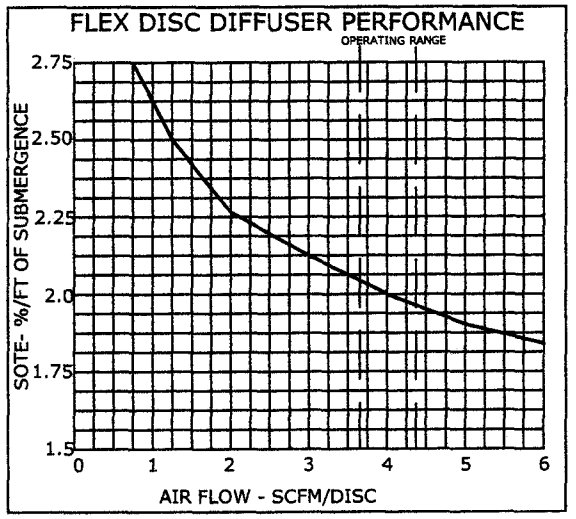

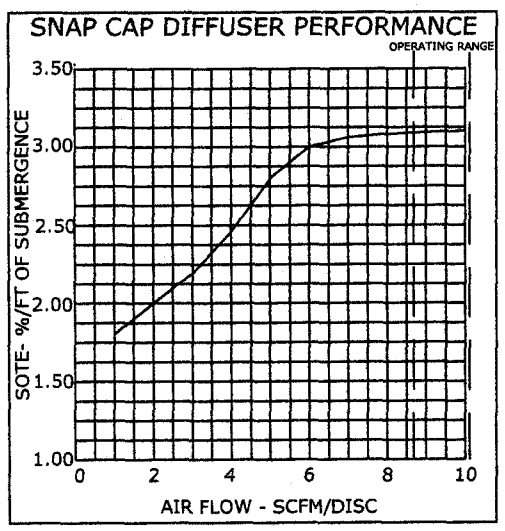

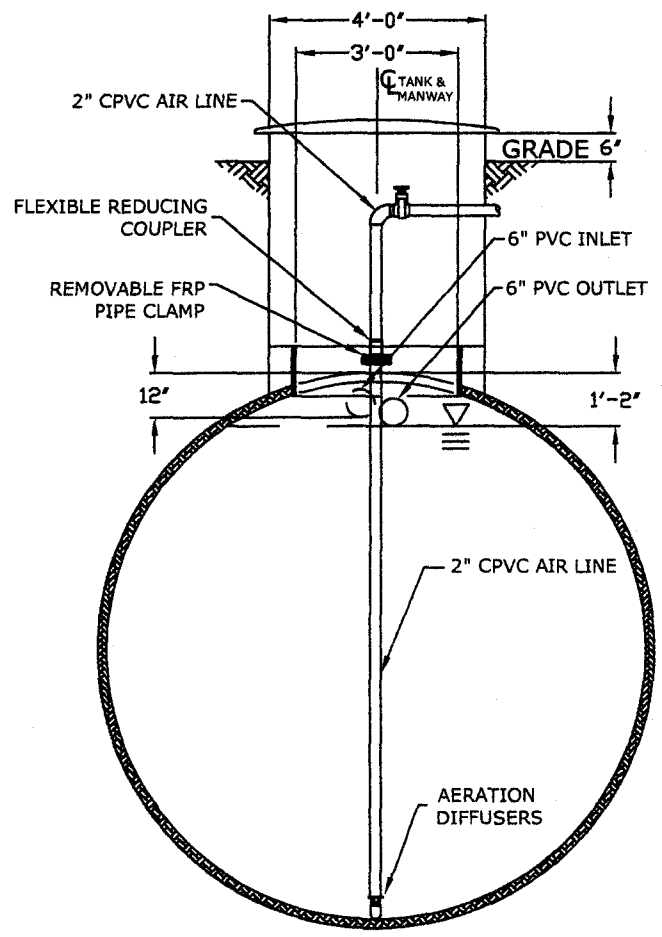

AERATION CROSS SECTION

PIPE LOCATION IN MANWAY

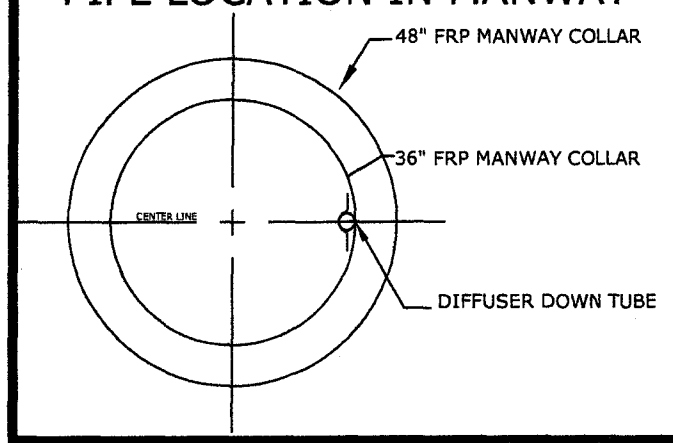

SANTEC STANDARDS

AERATION / DENITE TANK

40-12-3-6NCD

SANTEC CORPORATION
CASTLE ROCK, COLORADO
PHONE: 303.660.9211 FAX: 303.660.2180

DATE: 8-3-05
DRAWN BY: NAW
REV: REV 1.0
SHEET #: SS-40

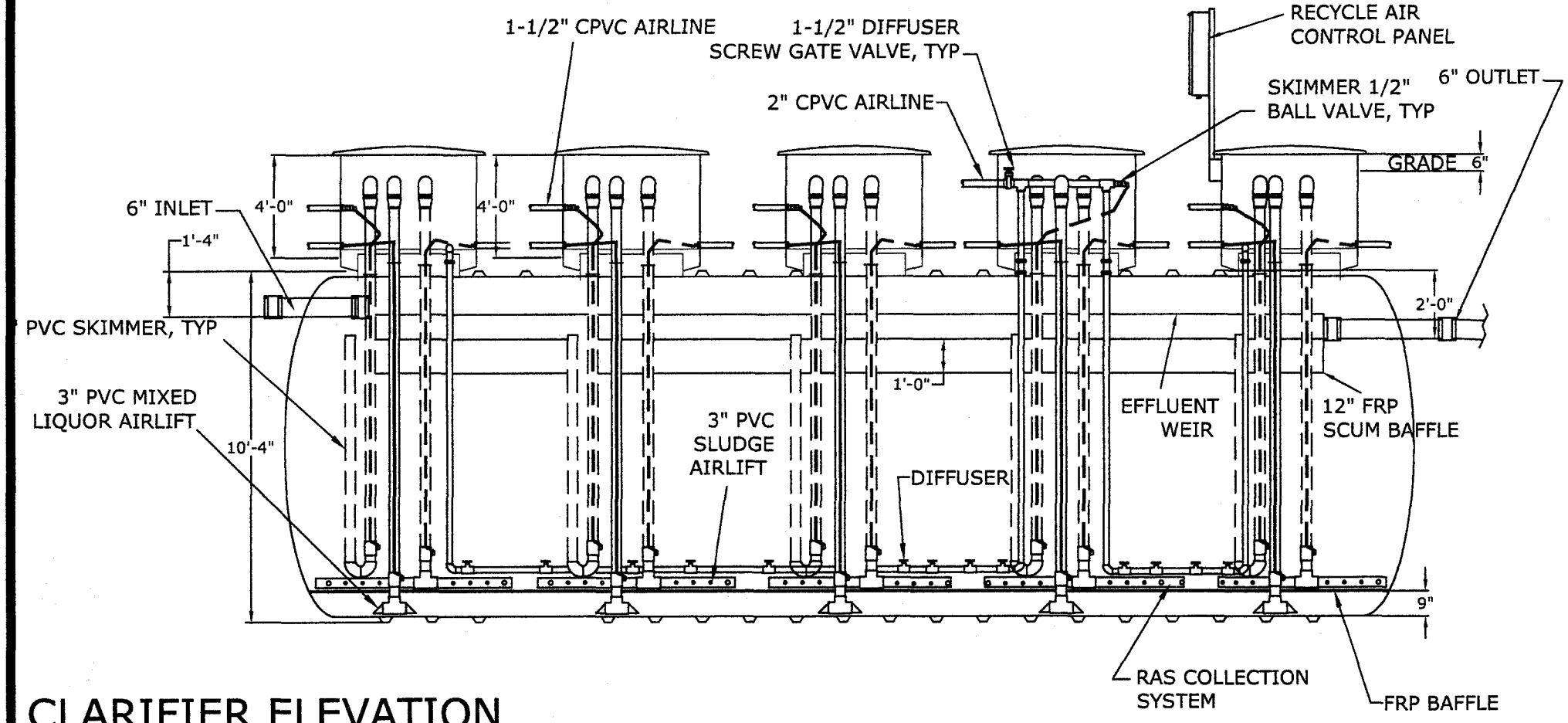

CLARIFIER ELEVATION

CLARIFIER CROSS SECTION

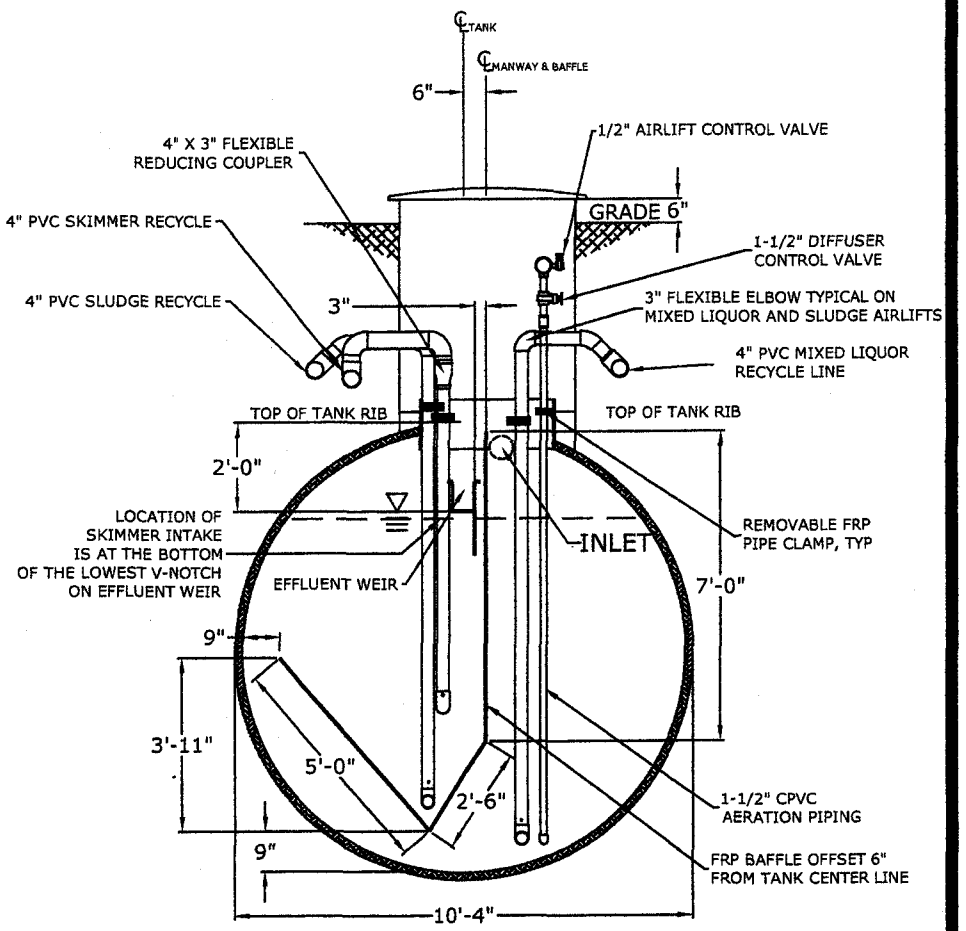

RECYCLE AIR PANEL DETAIL

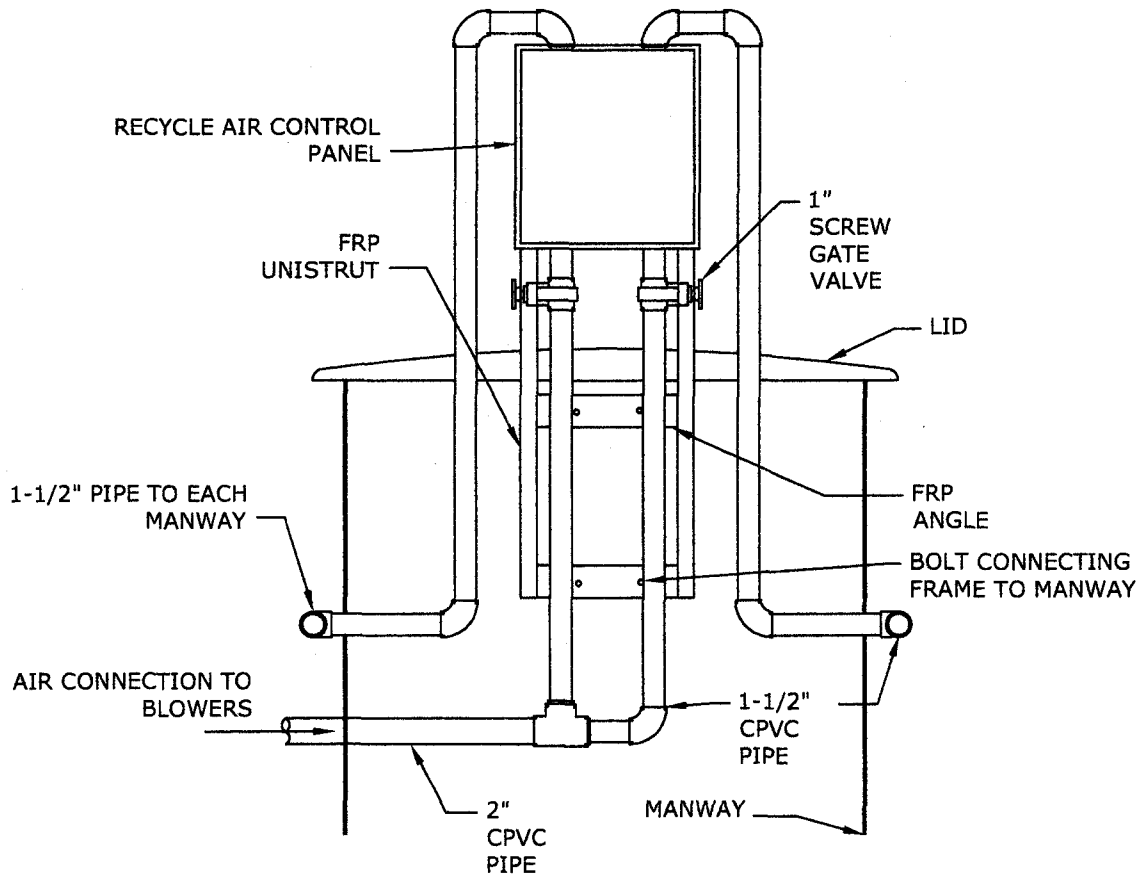

Registered Professional Engineer (Civil)
CERTIFICATE NO. 42318
DANIEL E. DOW
Date Signed
ARIZONA U.S.A.

SANTEC STANDARDS

CLARIFIER

50-10-5-6

Santec
SANTEC CORPORATION
CASTLE ROCK, COLORADO
PHONE: 303.660.9211 FAX: 303.660.2180

DATE: 8-11-05
DRAWN BY: NAW
REV: REV 1.0
SHEET #: SS-50

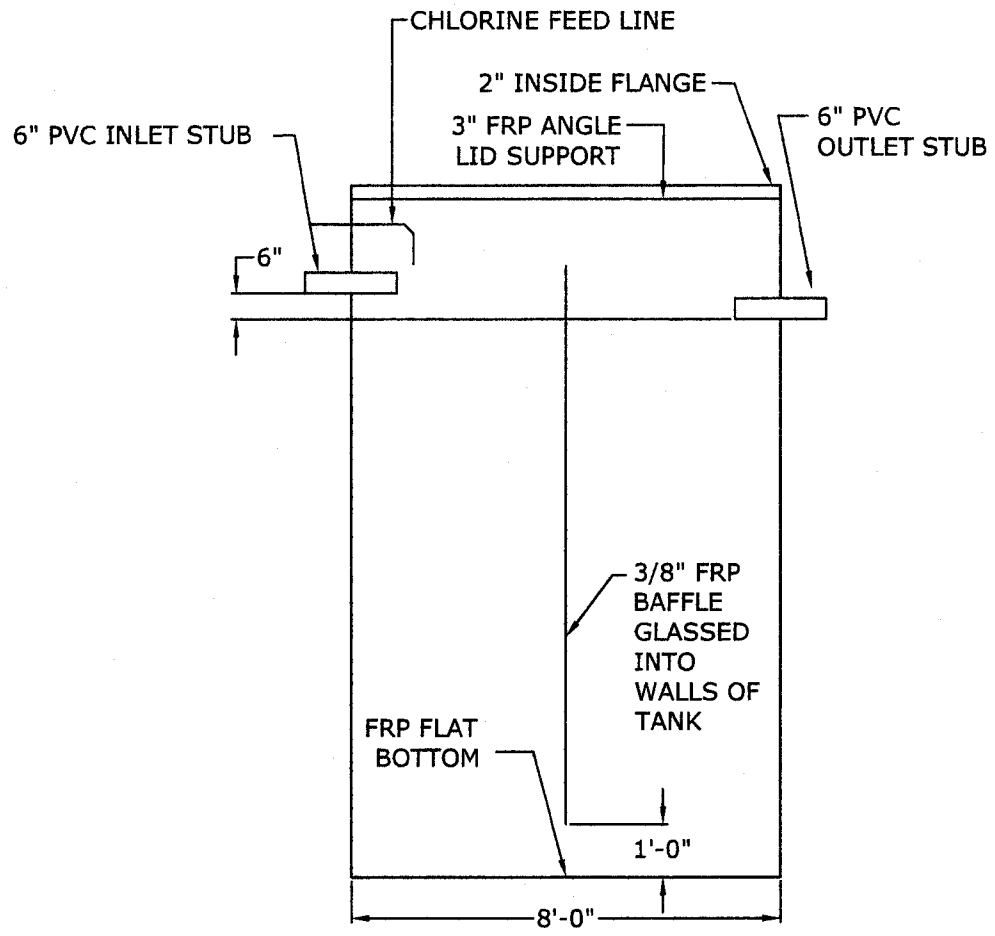

CHLORINE CONTACT TANK DETAIL

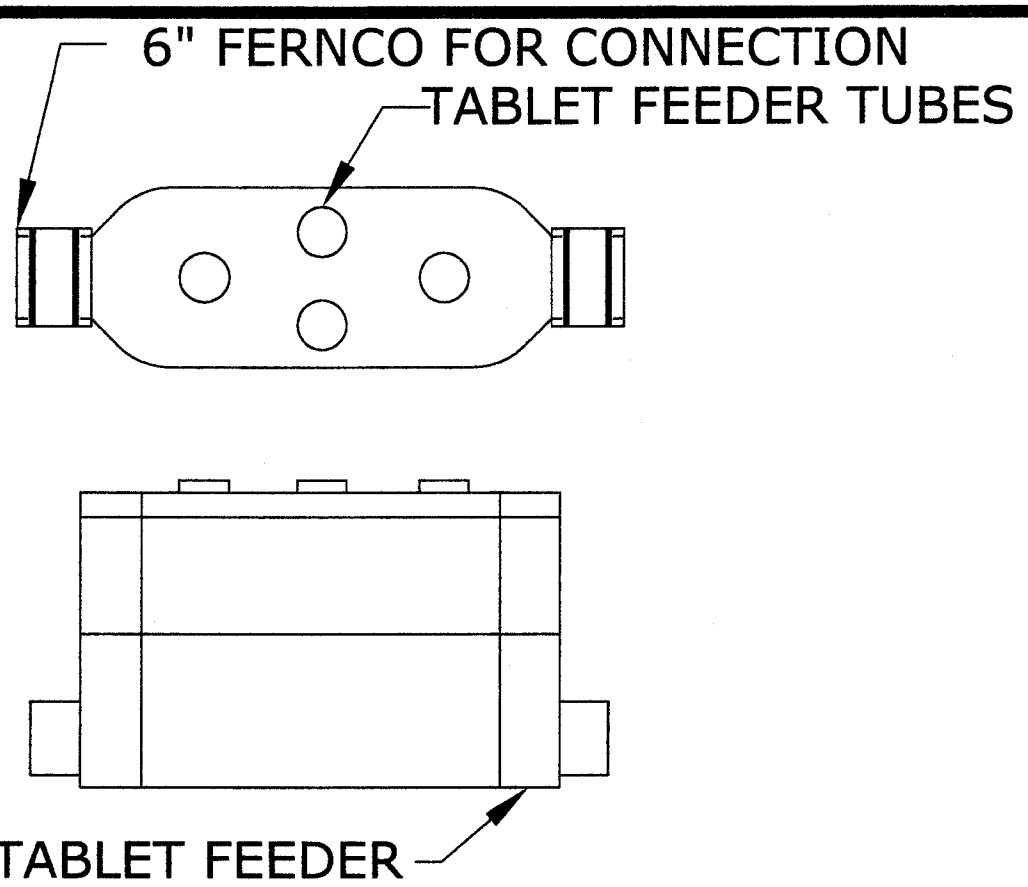

TABLET FEEDER DETAIL

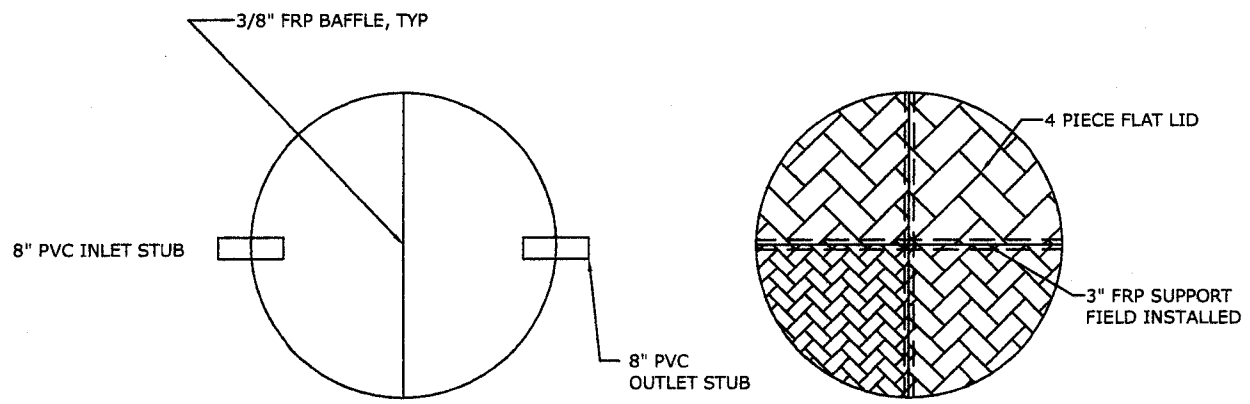

LID AND BAFFLE DETAIL

LMI CHEMICAL PUMP	
ITEM	DESCRIPTION
MODEL NUMBER	P161-362SI
GPH	2
INJECTION PRESS	50 PSI MAX
POWER SUPPLY	120v ac
HEAD AND FITTING	PVDF
BALL MATERIAL	CERAMIC
LIQUIFRAM	FLUOROFILM

NORWECO TABLET FEEDER	
ITEM	DESCRIPTION
MODEL NUMBER	ITR-4000-S
MAX FLOW	20,000-200,000 GPD
CHEMICAL TUBES	4

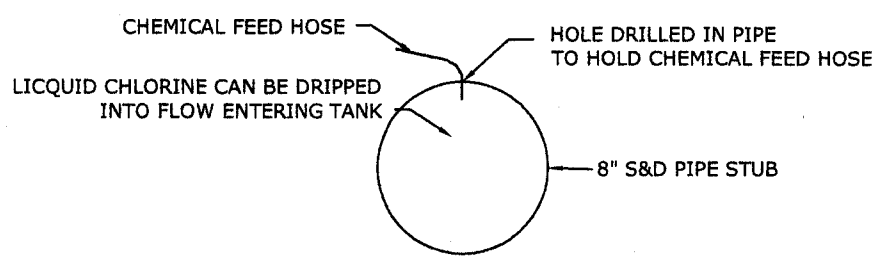

CHEMICAL FEED DETAIL

SANTEC STANDARDS

DISINFECTION

60-8-V-6LD

SANTEC CORPORATION
CASTLE ROCK, COLORADO
PHONE: 303.660.9211 FAX: 303.660.2180

DATE: 8-12-05
DRAWN BY: NAW
REV: REV 1.0
SHEET #: SS-60

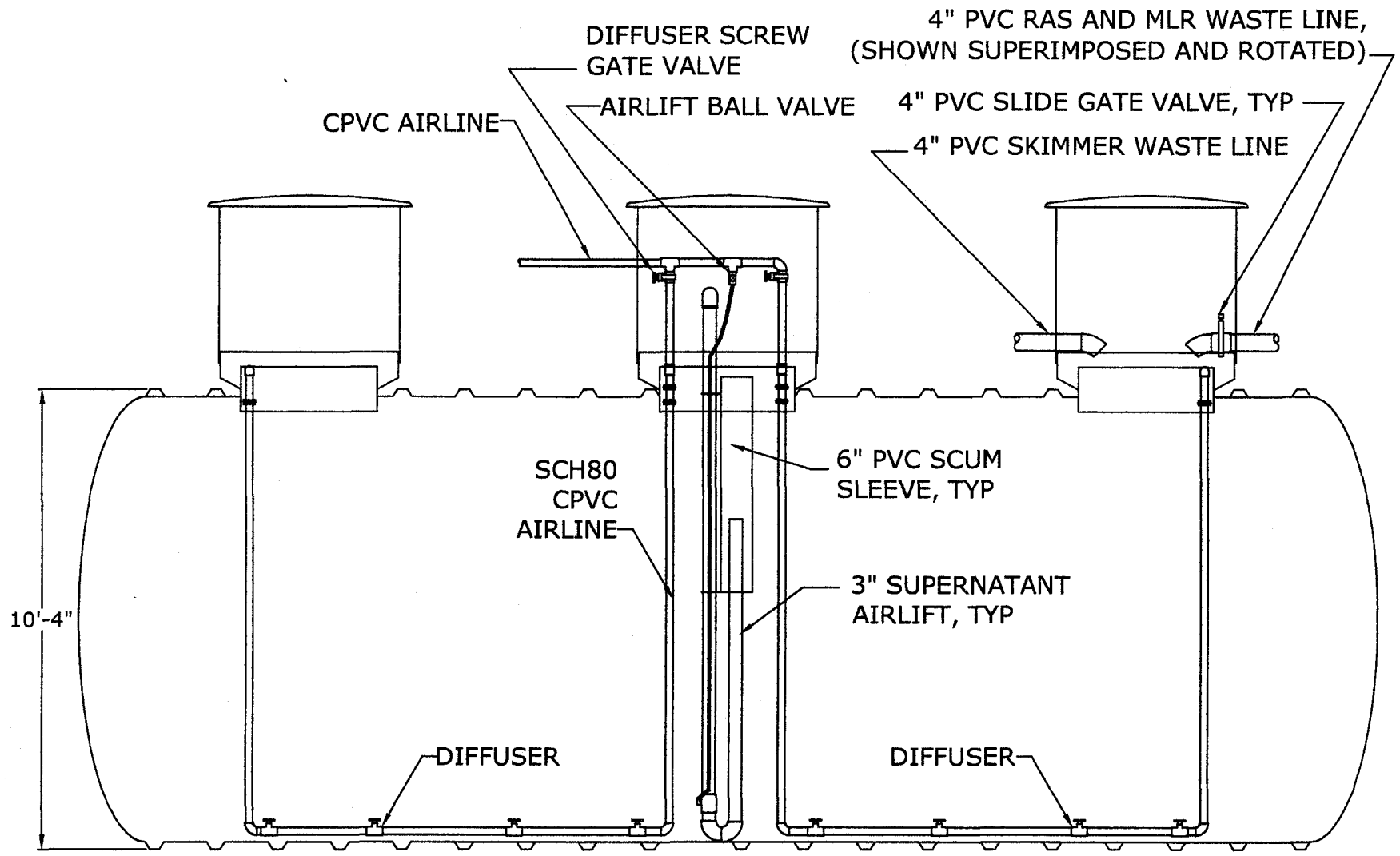

SLUDGE TANK ELEVATION

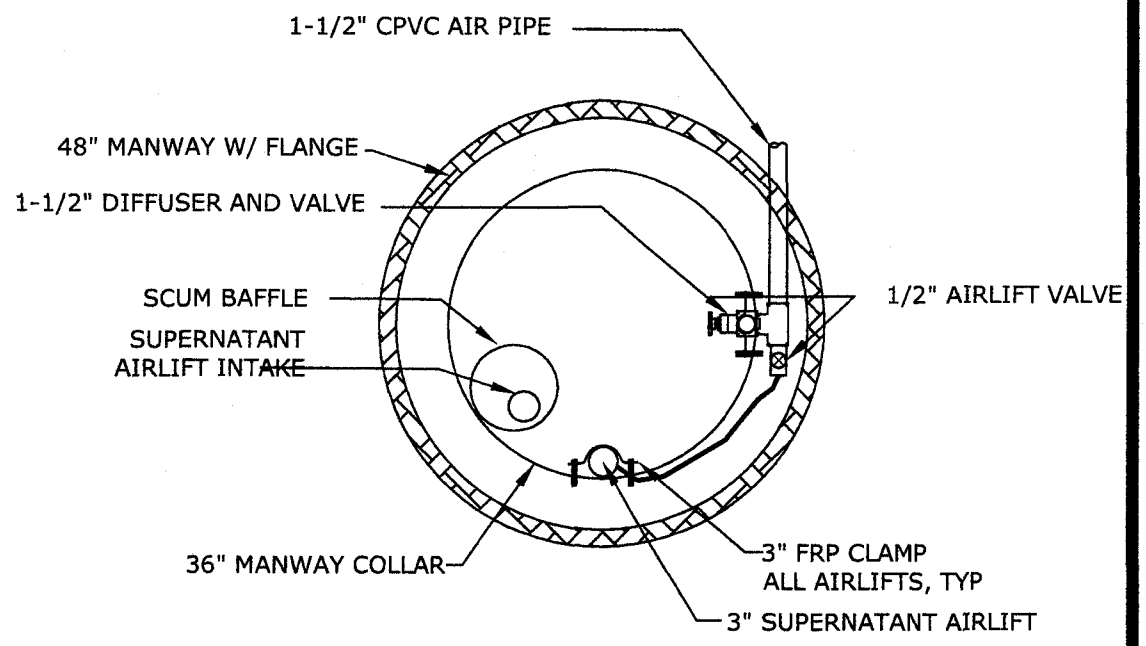

SLUDGE MANWAY VIEW

Registered Professional Engineer (Civil)
CERTIFICATE NO.
42318
DANIEL E.
DOW
Date Signed 1-12-06
ARIZONA U.S.A.

SANTEC STANDARDS
SLUDGE TANK
70-10-3-6

SANTEC CORPORATION
CASTLE ROCK, COLORADO
PHONE: 303.660.9211 FAX: 303.660.2180

DATE: 8-5-05
DRAWN BY: NAW
REV: REV 1.0
SHEET #: SS-70

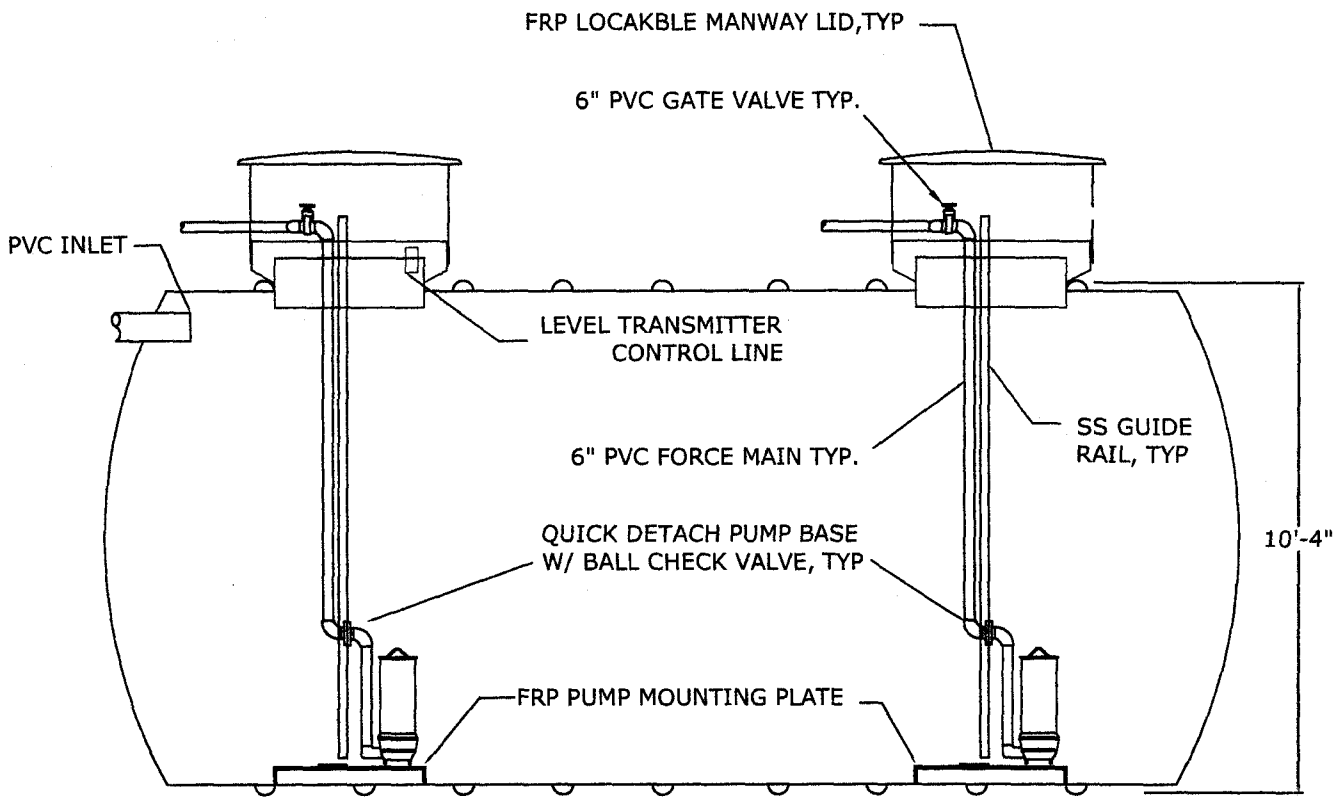

FLOW EQ ELEVATION

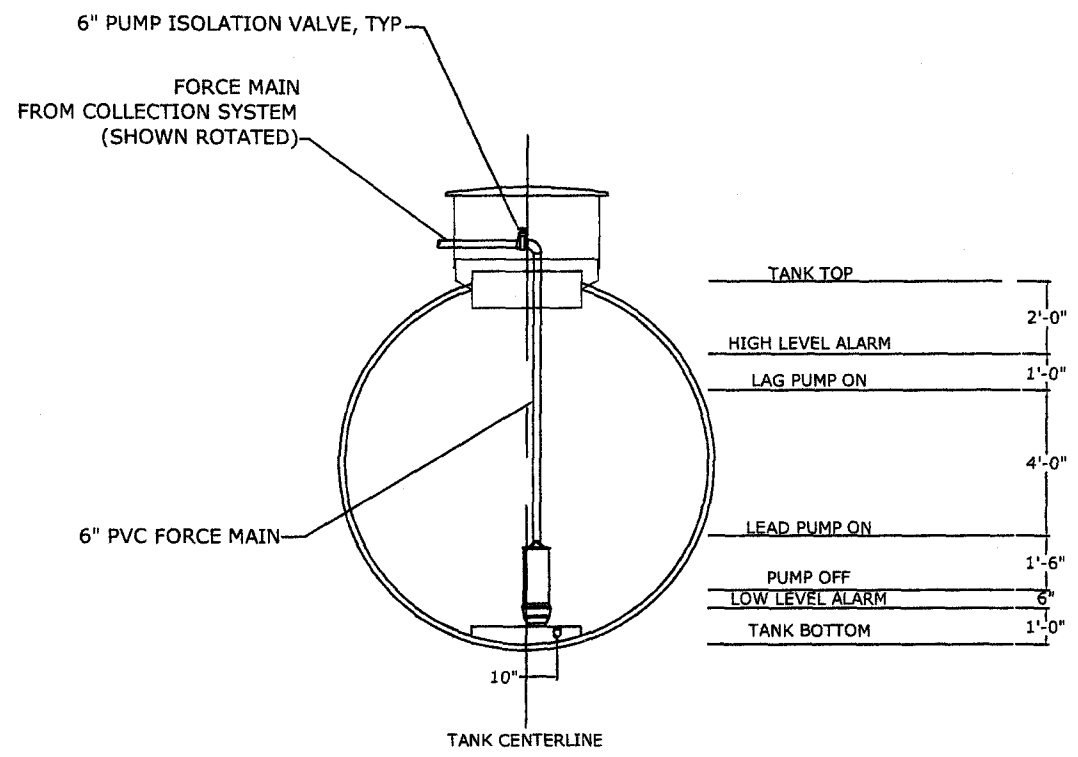

FLOW EQ CROSS SECTION

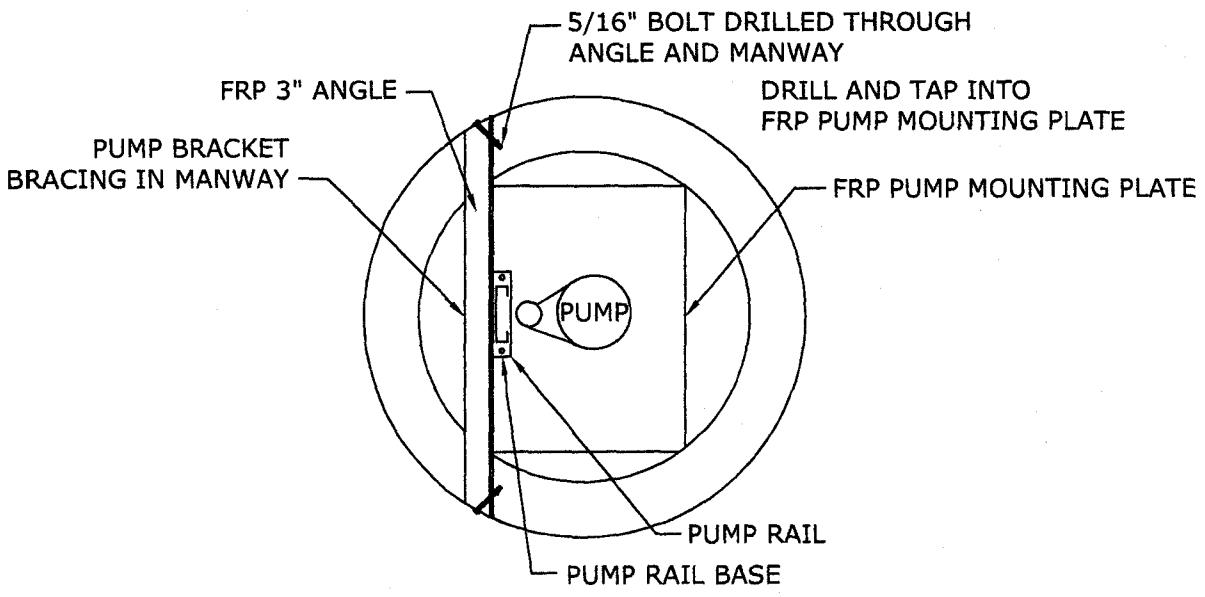

FLOW EQ MANWAY DETAIL

GREYLINE LEVEL CONTROLLER	
ITEM	DESCRIPTION
MODEL	PSL
MAX RANGE	32 FT
ACCURACY	+-0.25% OF RANGE
OUTPUT	ISOLATED 4-20 mA
# CONTROL RELAYS	6
OPERATING TEMP	-5°F - 140°F
SURGE PROTECTION	SENSOR, 4-20 mA, AC POWER
POWER SUPPLY	120v 60Hz 7.5 W MAX
ENCLOSURE	NEMA 4X

SANTEC STANDARDS
EFFLUENT LIFT STATION
80-10-2-LC

Santec
SANTEC CORPORATION
CASTLE ROCK, COLORADO
PHONE: 303.660.9211 FAX: 303.660.2180

DATE: 8-3-05
DRAWN BY: NAW
REV: REV 1.0
SHEET #: SS-80

STEP 1: MEASURE DISTANCE BETWEEN OUTER EDGE OF 36" COLLARS

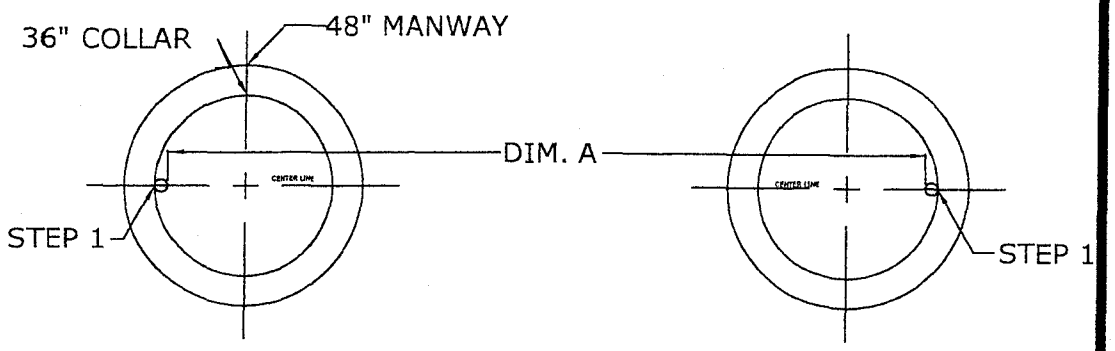

STEP 2: BUILD CPVC DROP PIPE

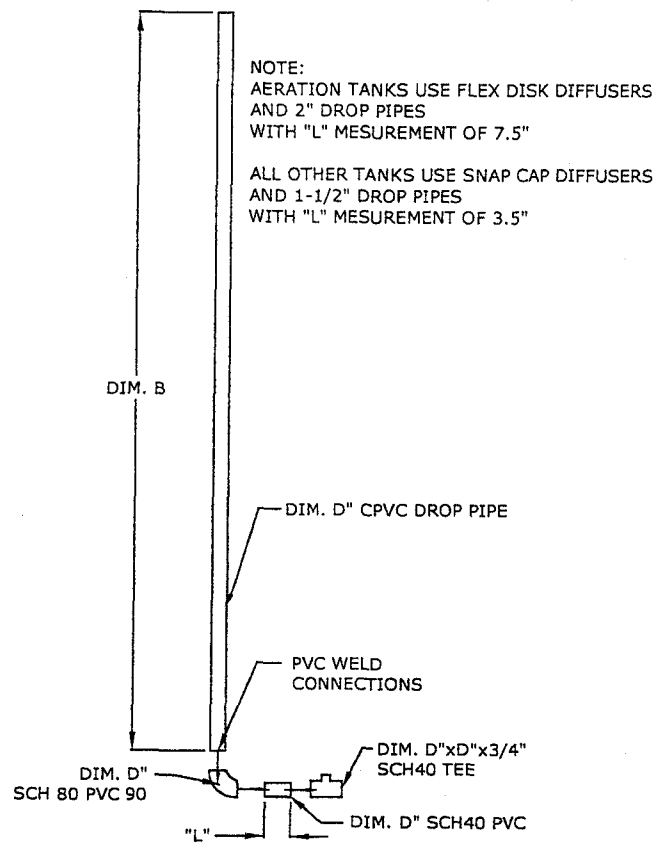

STEP 3: BUILD PVC SCH 80 RISER PIPE

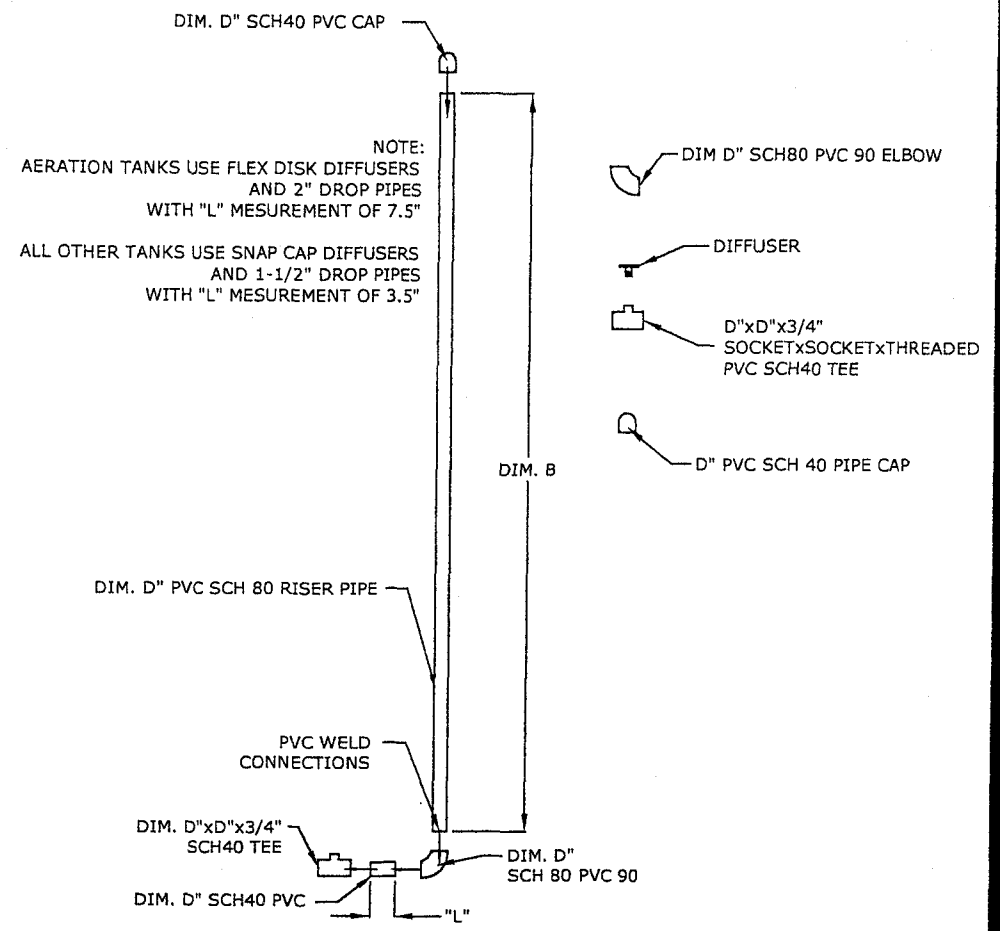

STEP 4: EQUALLY SPACE REMAINING DIFFUSERS ON DIFFUSER MANIFOLD MAINTANING DIM "A"

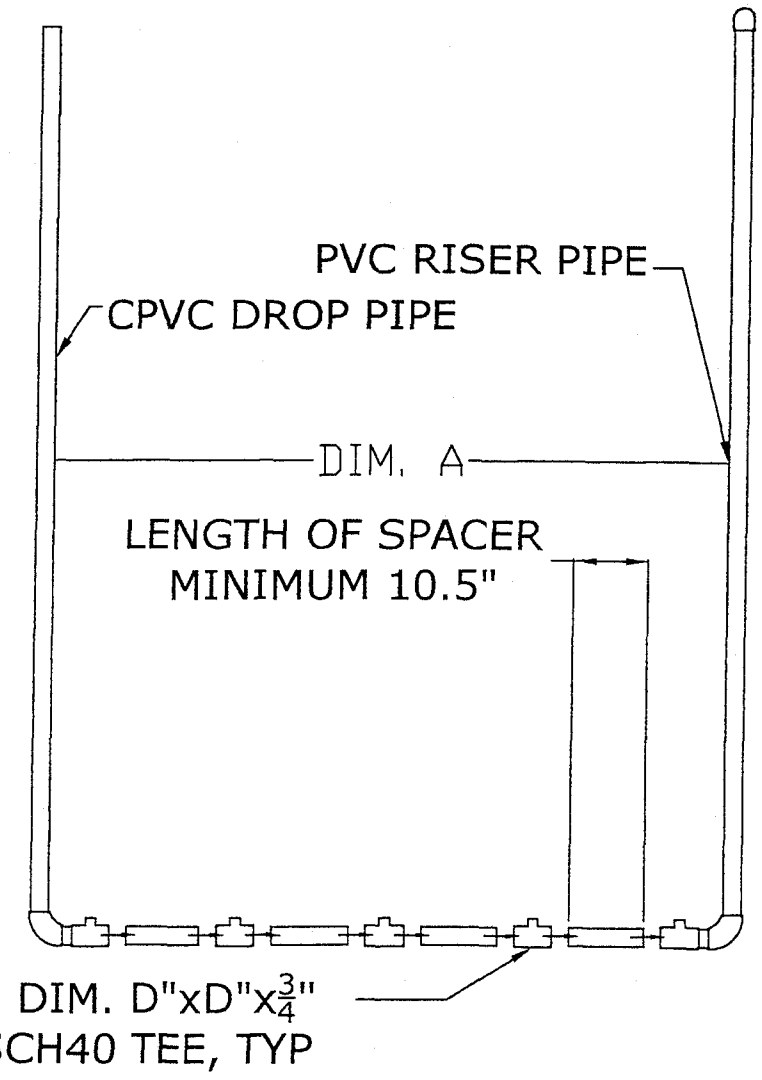

STEP 5: SCREW DIFFUSERS INTO MANIFOLD

NOTE: ALLOW DRYING TIME BEFORE INSTALLING

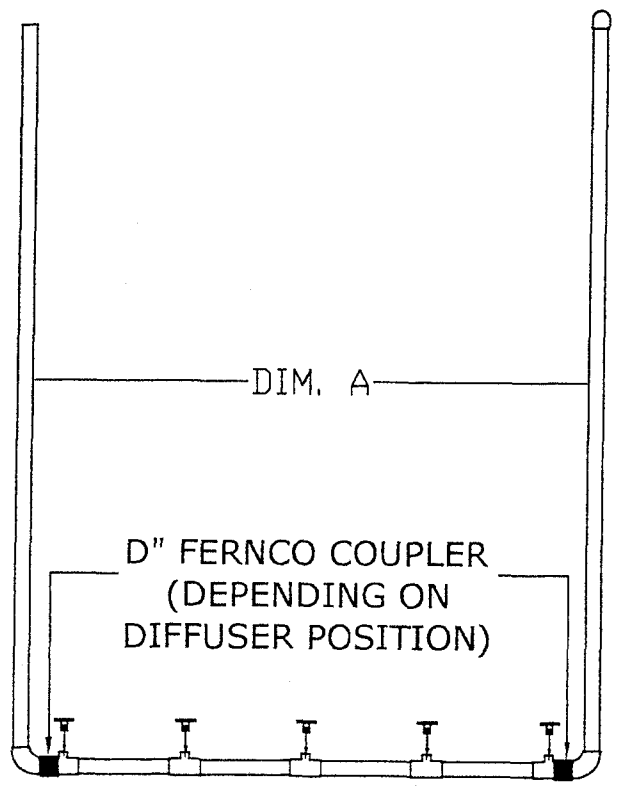

NOTE: IF DIFFUSER BANK WILL BE PLACED ON BOTTOM OF TANK, ADD 1 FOOT TO LENGTH OF DIFFUSER DOWN AND RISER AND PLACE FERNCOS ON BOTTOM OF BANK

TANK DIAMETER	PIPE DIA. DIM. D	PIPE LENGTH DIM. B
8' DIA.	1-½"	8'
8' DIA.	2"	8'
10' DIA.	1-½"	10'
10' DIA.	2"	10'
12' DIA.	1-½"	12'
12' DIA.	2"	12'
14' DIA.	1-½"	14'
14' DIA.	2"	14'

DIFFUSER MEASUREMENT

CONSTRUCTION DETAILS

Santec
SANTEC CORPORATION
CASTLE ROCK, COLORADO
PHONE: 303.660.9211 FAX: 303.660.2180

DATE: 8-16-05
DRAWN BY: NAW
REV:
SHEET #: CD1

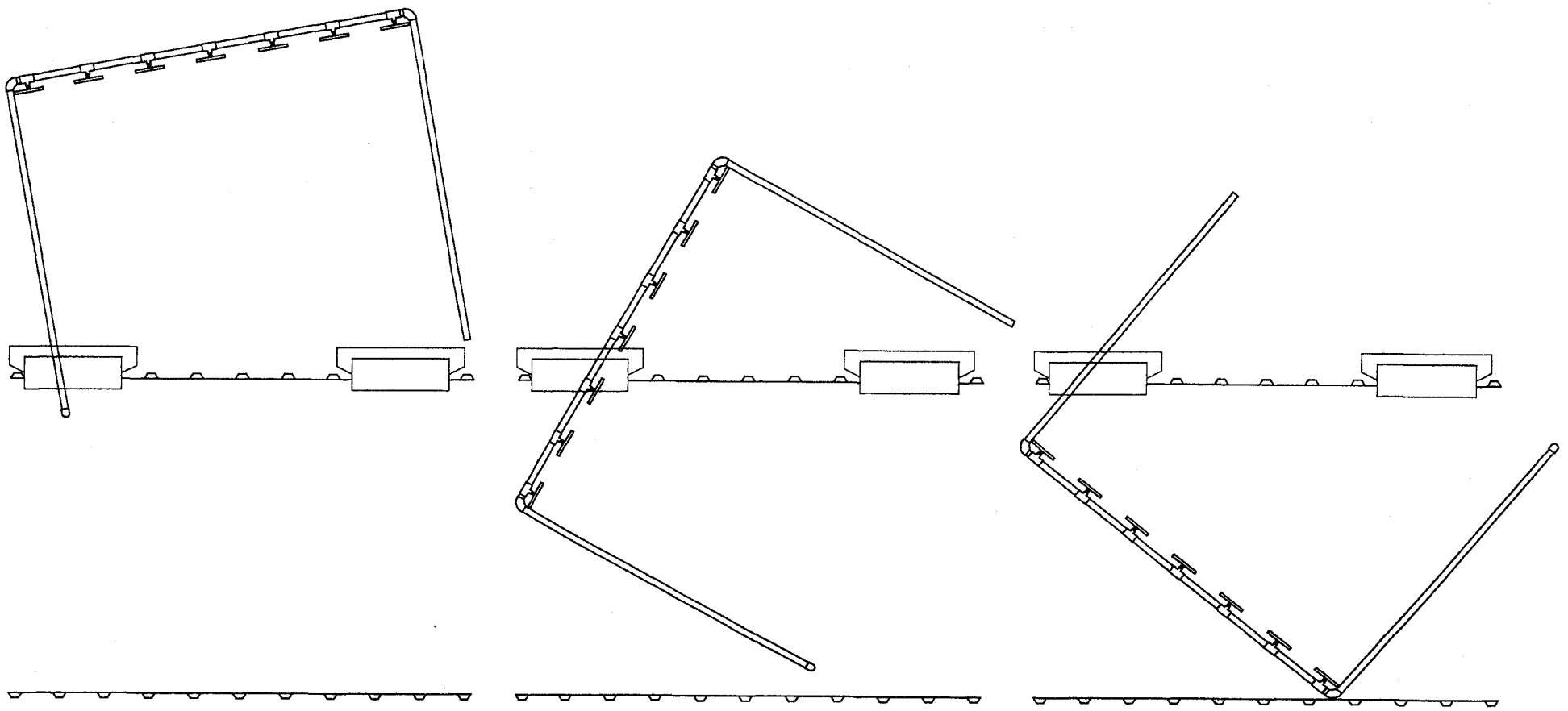

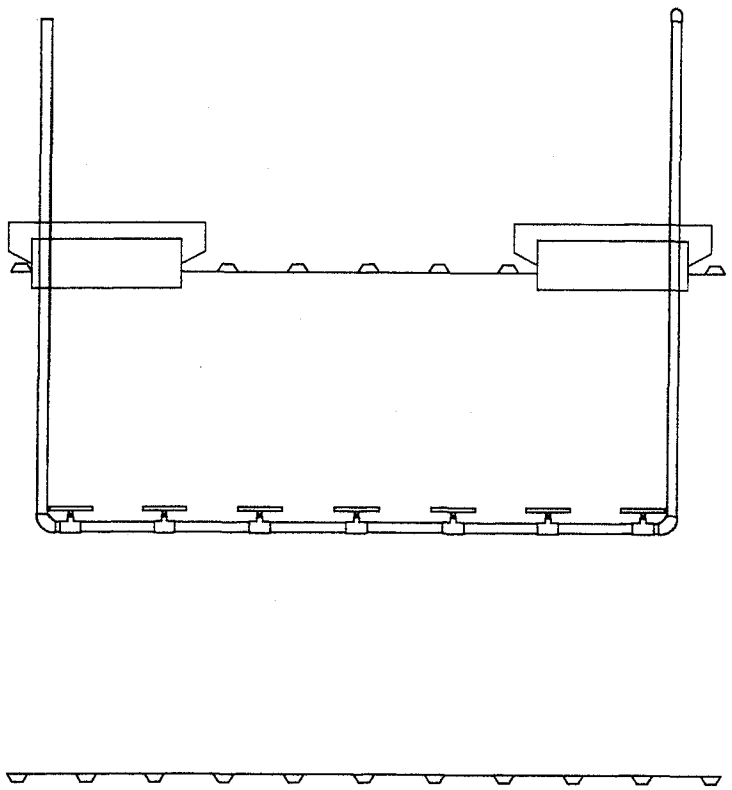

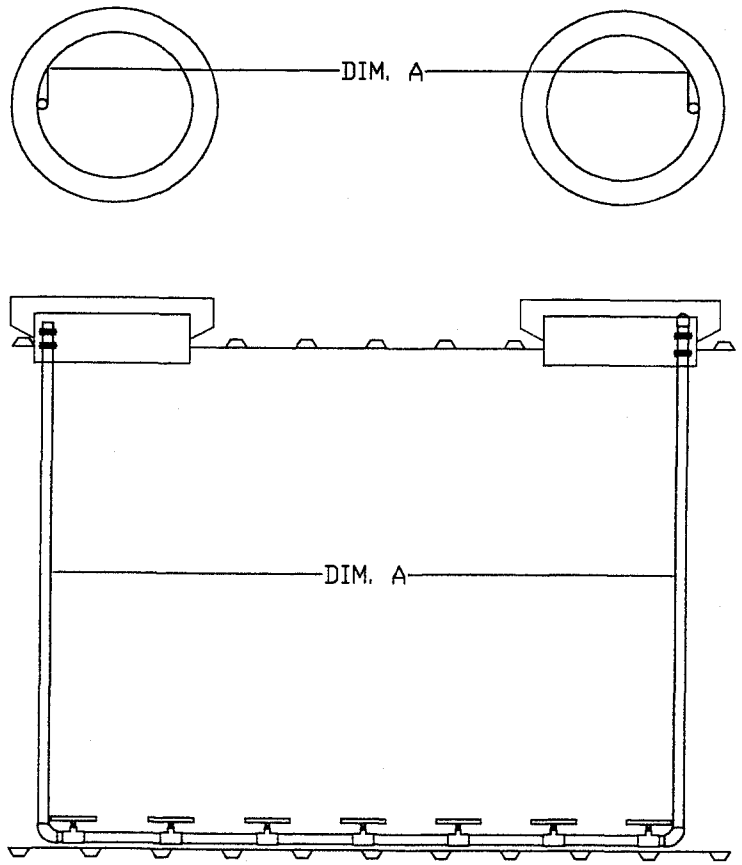

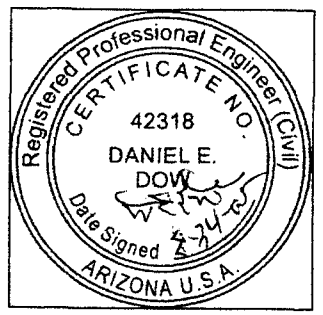

NOTE: DRILL 1/2" HOLE
IN FIBERGLASS COLLAR
FOR THREADED ROD

FOR PIPE IN AERATION
TANKS, USE TWO (2) PIPE CLAMPS
FOR EACH DOWN TUBE

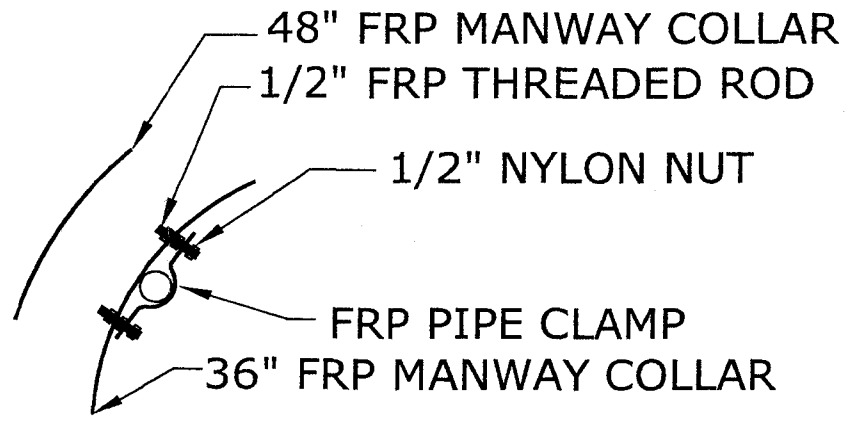

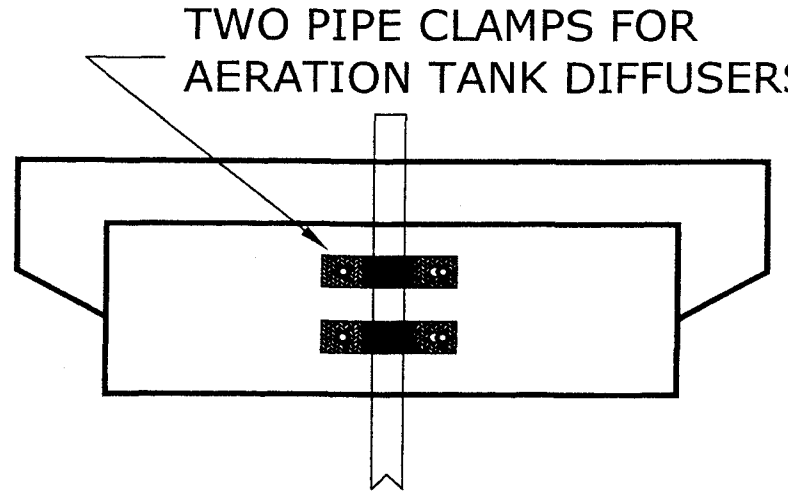

DIFFUSER INSTALLATION

CONSTRUCTION DETAILS

Santec
SANTEC CORPORATION
CASTLE ROCK, COLORADO
PHONE: 303.660.9211 FAX: 303.660.2180

DATE:	8-16-05
DRAWN BY:	NAW
REV:	
SHEET #:	CD2

TANK DIA	DIM A
8' DIA	5'-0"
10' DIA	6'-6"
12' DIA	9'-0"

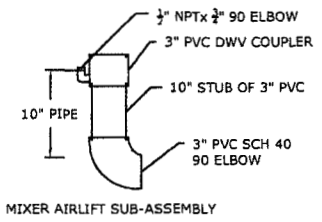

MIXER AIRLIFT SUB-ASSEMBLY

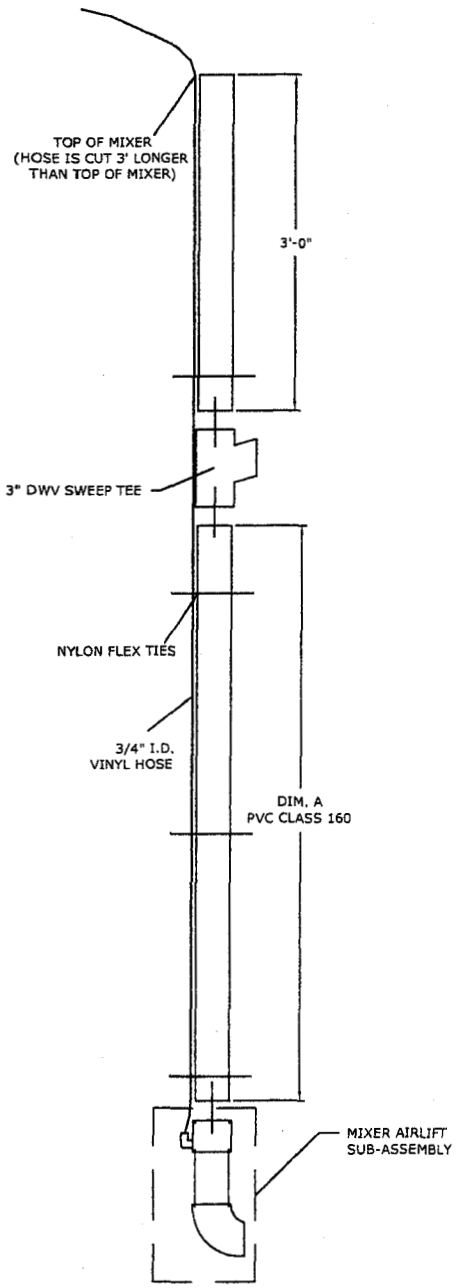

MIXER AIRLIFT ASSEMBLY

TANK DIA	DIM A
8' DIA	8'-0"
10' DIA	10'-0"
12' DIA	12'-0"

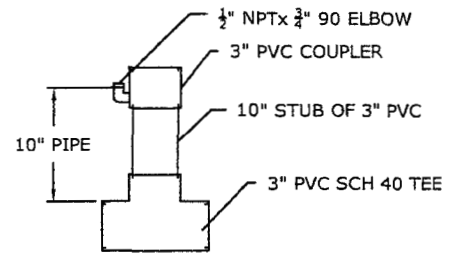

SLUDGE AIRLIFT SUB-ASSEMBLY

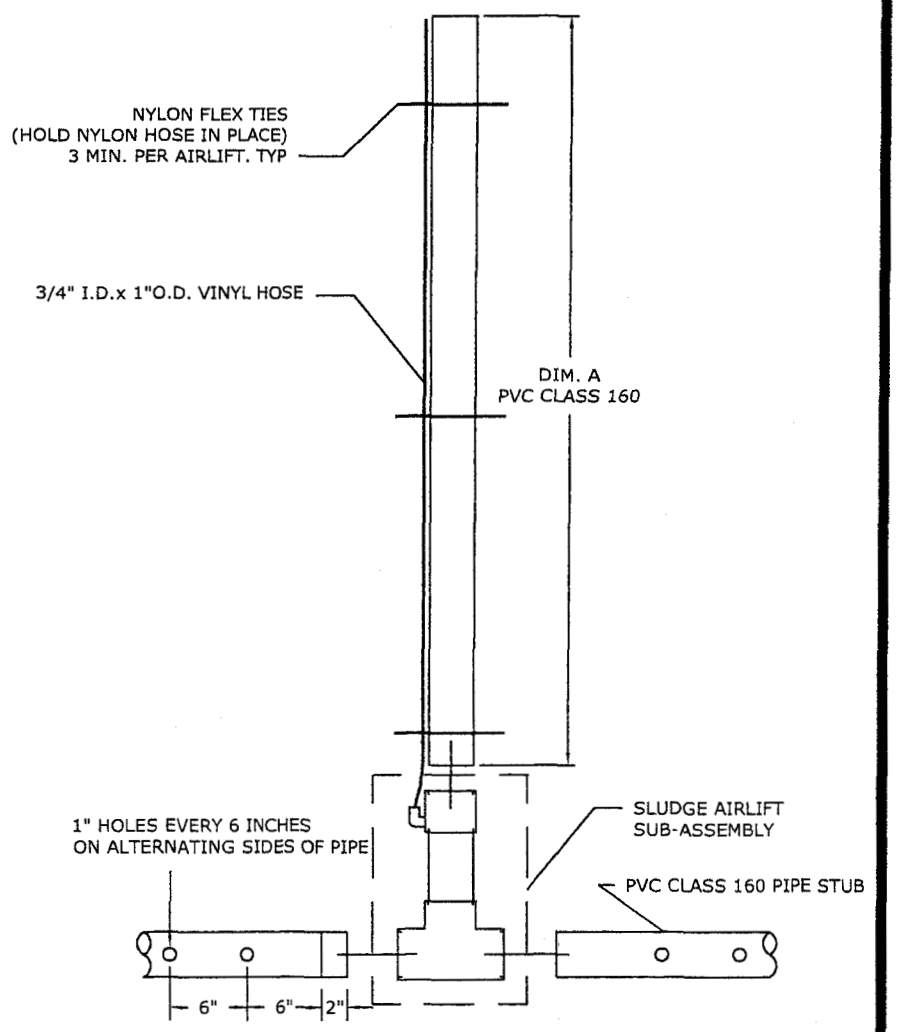

SLUDGE AIRLIFT ASSEMBLY

TANK DIA	DIM A
8' DIA	7'-2"
10' DIA	9'-2"
12' DIA	11'-2"

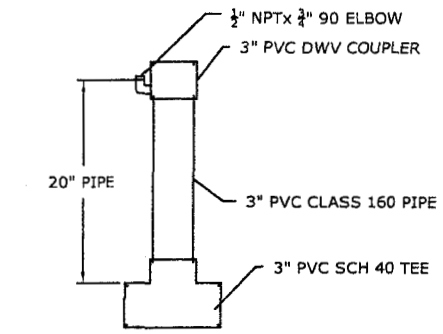

MIXED LIQUOR AIRLIFT SUB-ASSEMBLY

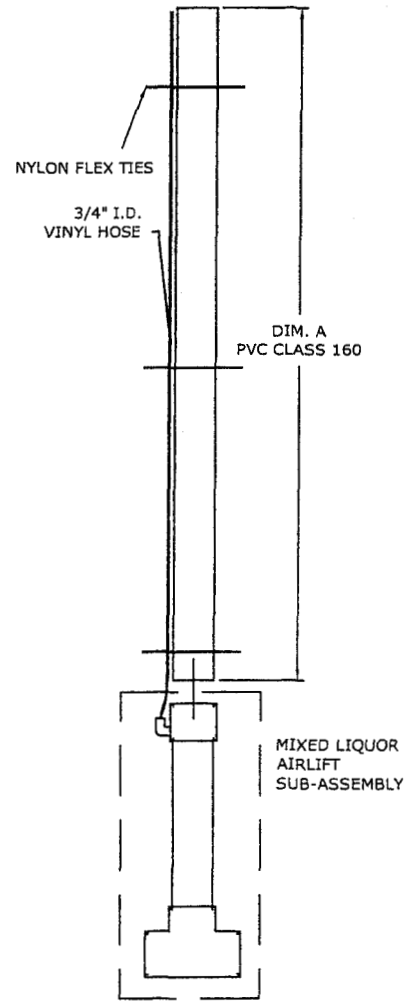

MIXED LIQUOR AIRLIFT ASSEMBLY

TANK DIA	DIM A
8' DIA	8'-0"
10' DIA	10'-0"
12' DIA	12'-0"

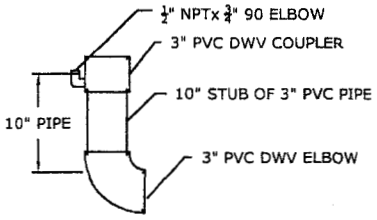

SKIMMER AIRLIFT SUB-ASSEMBLY

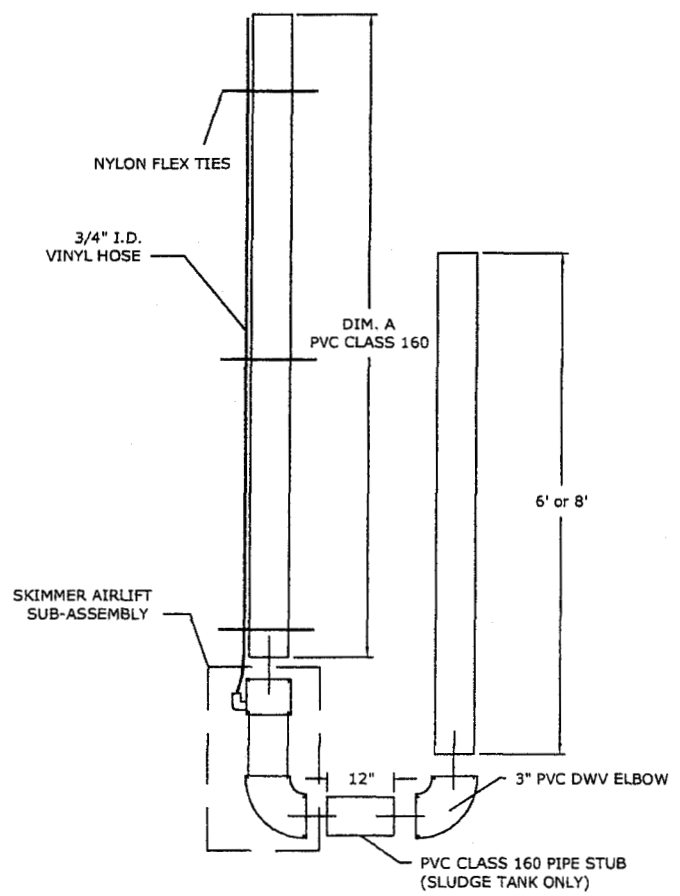

SKIMMER AIRLIFT ASSEMBLY

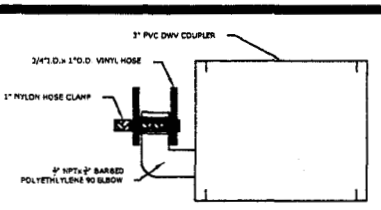

AIR INLET DETAIL

Registered Professional Engineer (Civil)
CERTIFICATE NO.
42318
DANIEL E.
DOW
Date Signed 3-24-06
ARIZONA U.S.A.

AIRLIFT CONSTRUCTION

CONSTRUCTION DETAILS

Santec
SANTEC CORPORATION
CASTLE ROCK, COLORADO
PHONE: 303.660.9211 FAX: 303.660.2180

DATE: 8-16-05
DRAWN BY: NAW
REV:
SHEET #: CD3

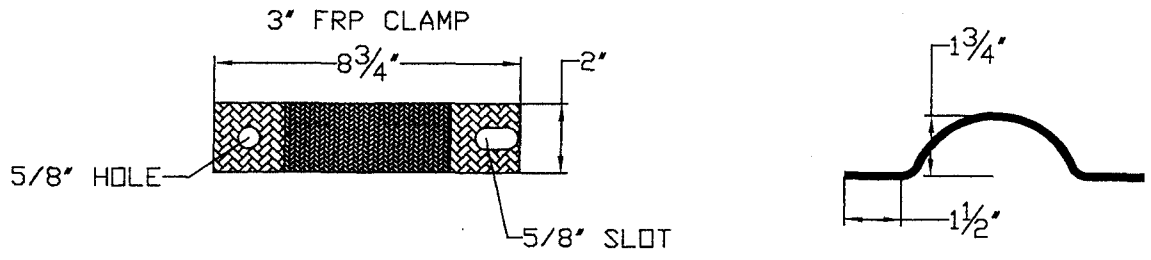

MOUNTING AIRLIFTS IN CLARIFIER

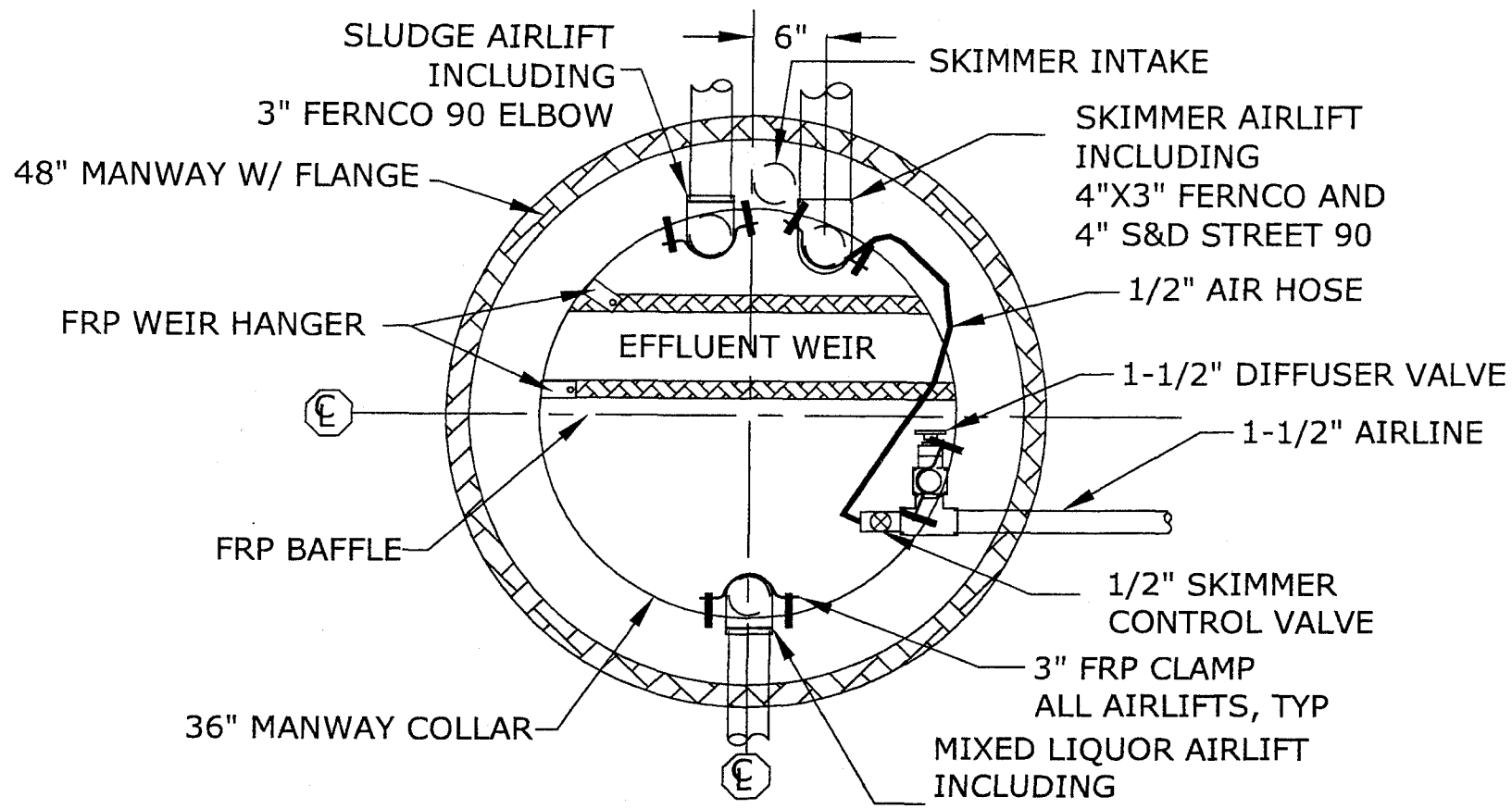

NOTE: DRILL 1/2" HOLE
IN FIBERGLASS COLLAR
FOR THREADED ROD

FOR 3" CLAMPS, USE ONLY
ONE CLAMP

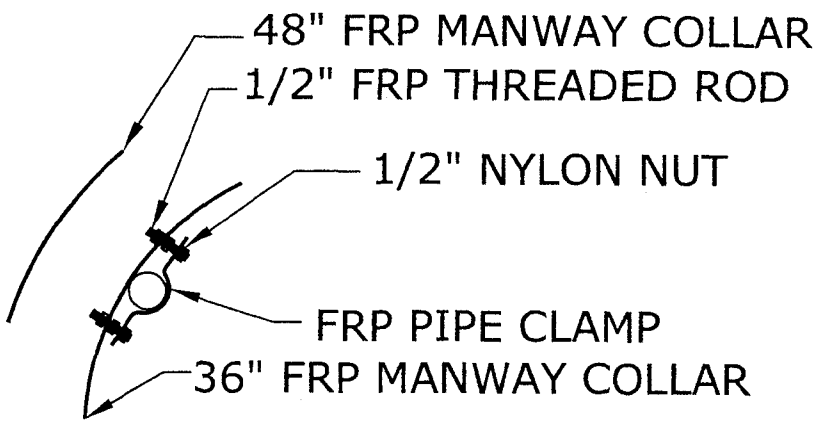

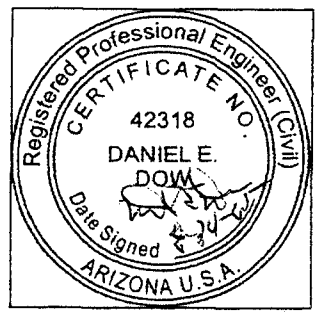

AIRLIFT MOUNTING
THE CLARIFIER
CONSTRUCTION DETAILS

Santec
SANTEC CORPORATION
CASTLE ROCK, COLORADO
PHONE: 303.660.9211 FAX: 303.660.2180

DATE: 8-16-05
DRAWN BY: NAW
REV:
SHEET #: CD4

STEP 1: ATTACH/ TIGHTEN FERNCO ON OUTLET END

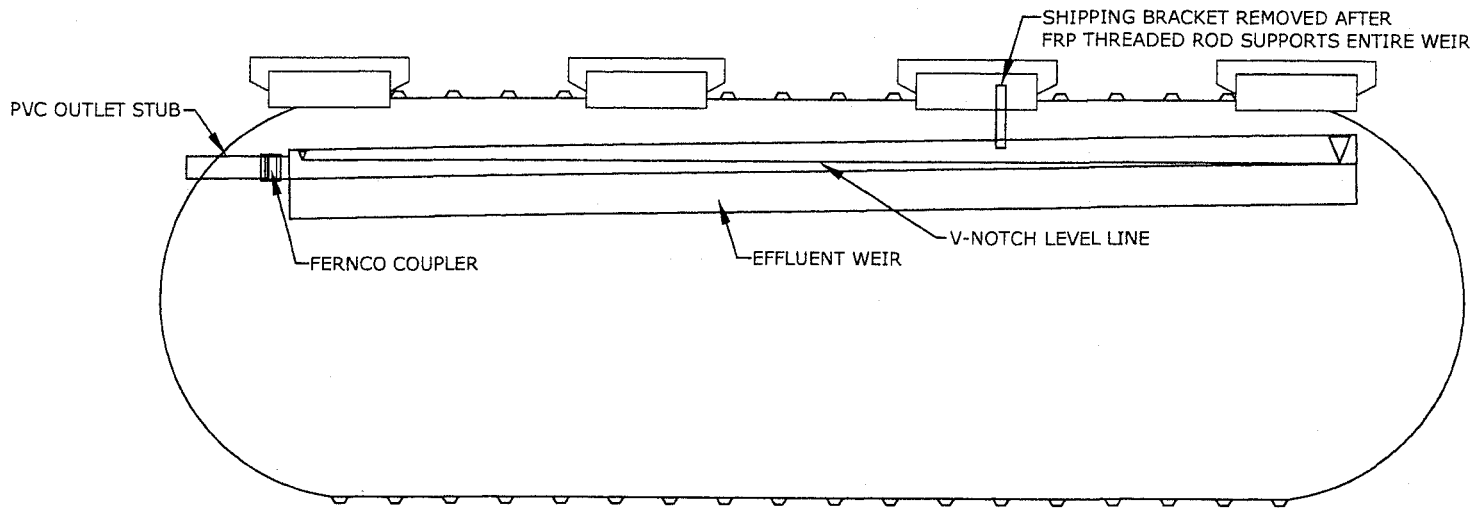

STEP 2: DRILL MOUNTING HOLES IN WEIR
STEP 3: MOUNT AND DRILL SUPPORT BRACKET FLUSH W/ 36" COLLAR TOP

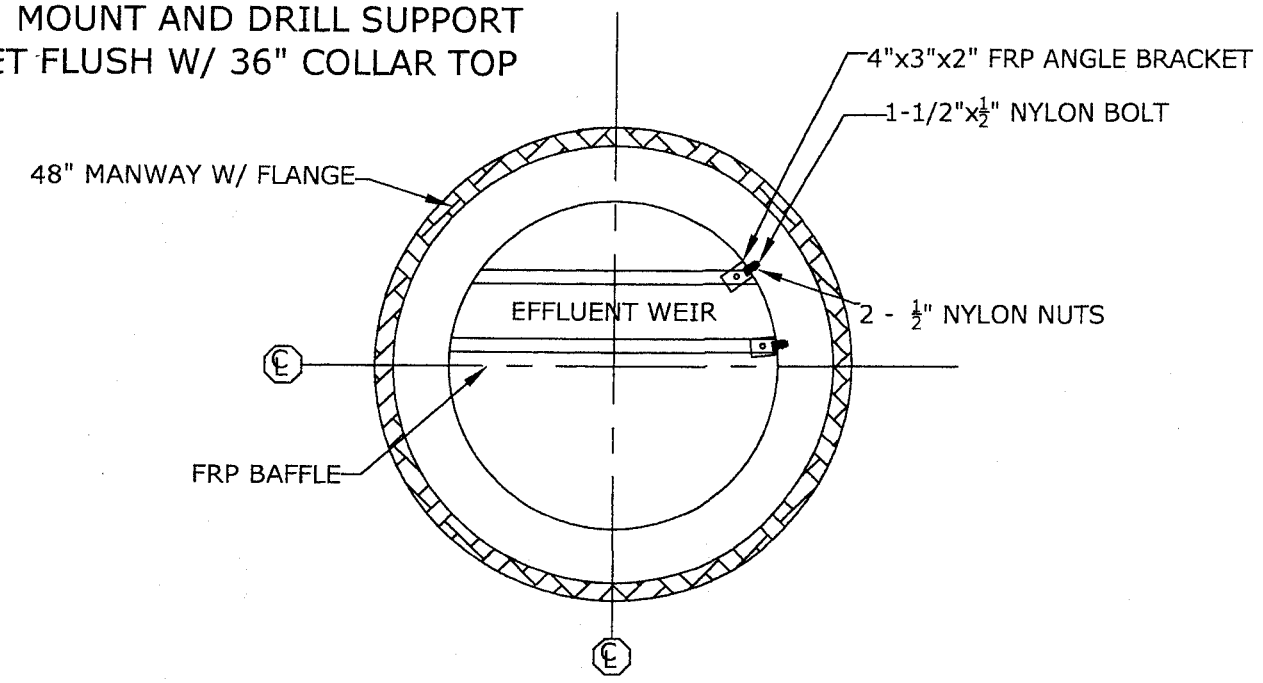

STEP 4: MOUNT WEIR SUPPORT AND TIGHTEN

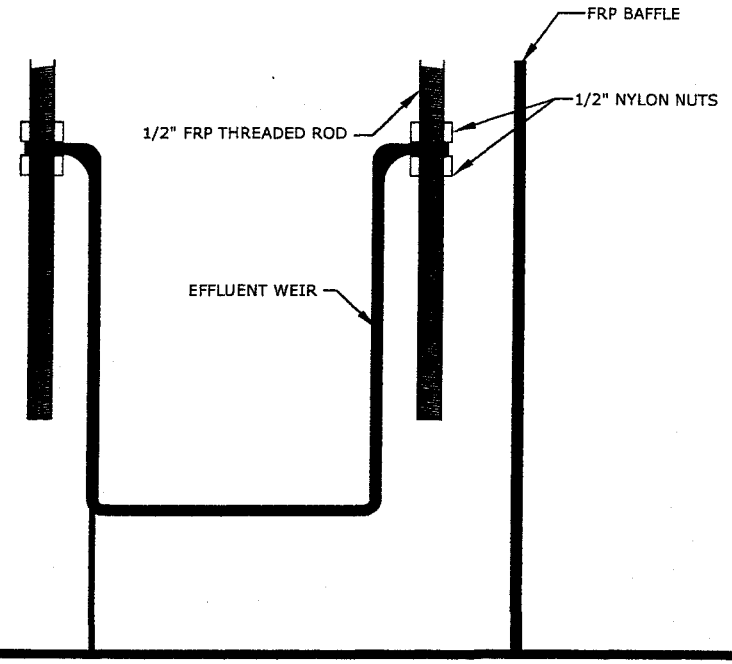

STEP 5: MOUNT WEIR BRACKETS AND TIGHTEN

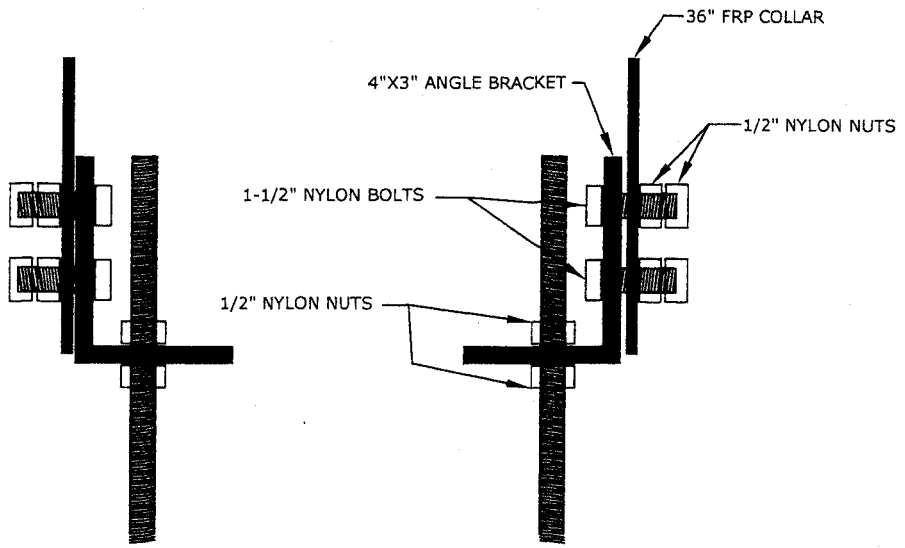

STEP 6:
LEVEL WEIR FROM SIDE TO SIDE

STEP 7:
REPEAT FOR ALL MANWAYS EXCEPT OUTLET STUB MANWAY

STEP 8:
LEVEL V-NOTCHES FROM END TO END
(SHOULD BE 5-½" BOTTOM OF WEIR DIFFERENCE)

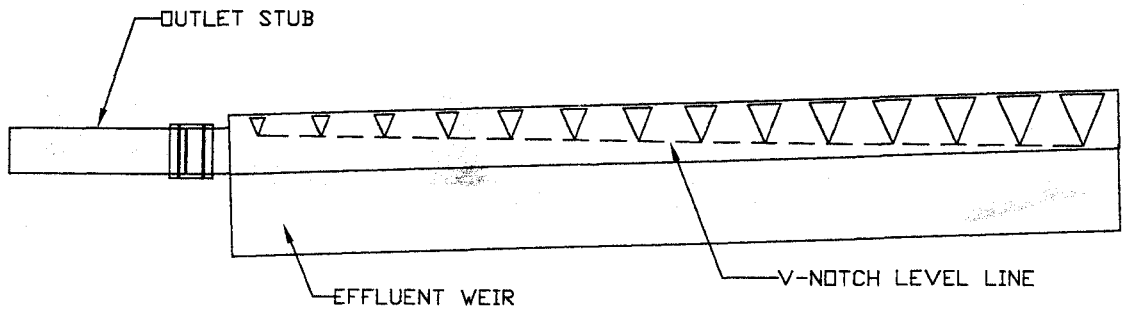

4"x3"x2"x⅜" ANGLE BRACKET

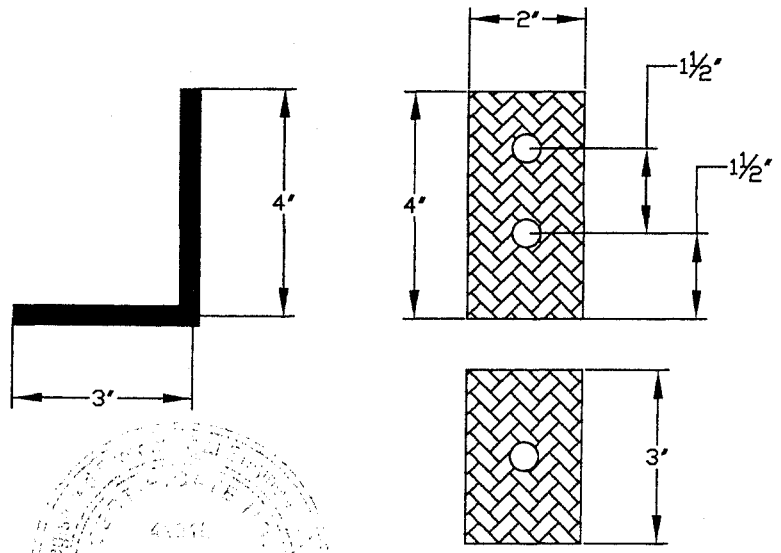

MOUNTING WEIR
THE CLARIFIER
CONSTRUCTION DETAILS

SANTEC CORPORATION
CASTLE ROCK, COLORADO
PHONE: 303.660.9211 FAX: 303.660.2180

DATE: 8-16-05
DRAWN BY: NAW
REV:
SHEET #: CD5

STEP 1: MEASURE DISTANCE BETWEEN CENTER POINTS OF AIRLIFTS. SUBTRACT DISTANCE FROM CENTER OF TEE TO START OF SOCKET TO FIND LENGTH OF MANIFOLD

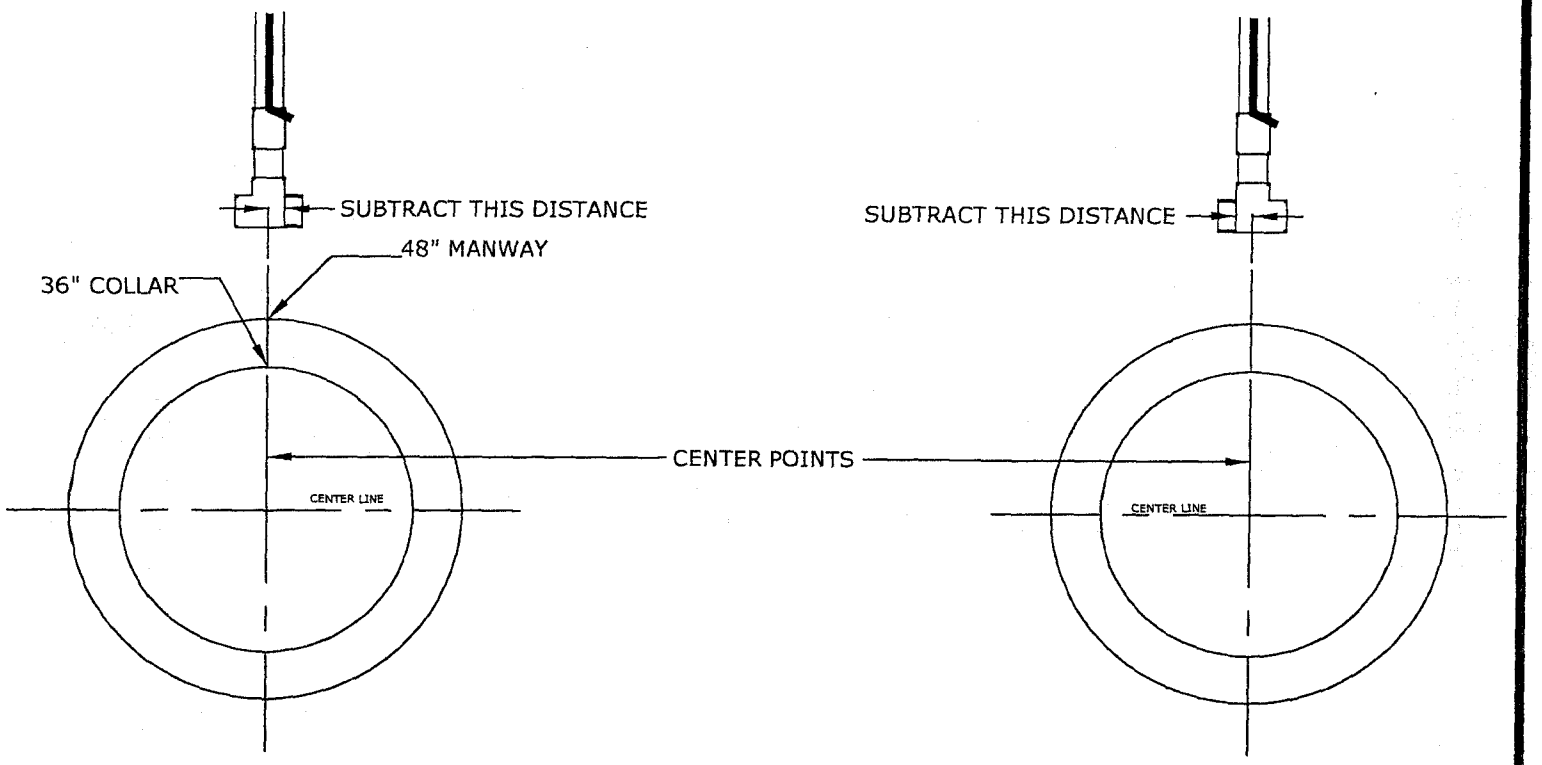

STEP 2: CUT MANIFOLD AND DRILL HOLES ON ALTERNATING SIDES EVERY 6" AS SHOWN BELOW
CAP THE END MANIFOLDS AND DRILL A 1" HOLE IN THE END

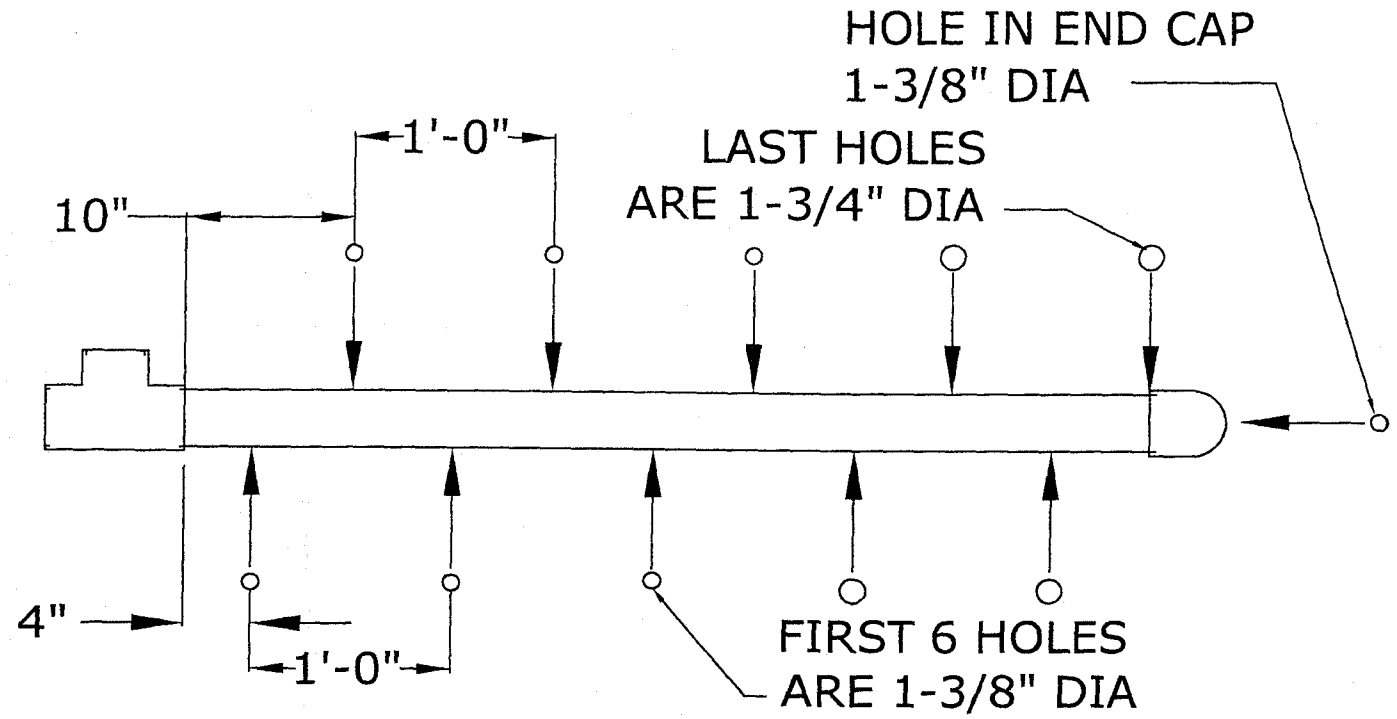

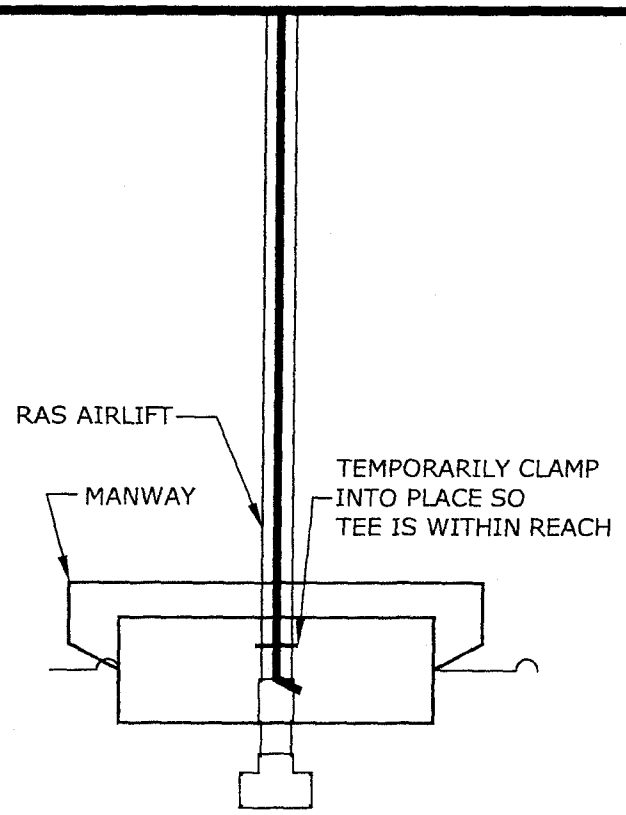

STEP 3: CLAMP AIRLIFTS INTO PLACE SO TEE'S ARE WITHIN REACH

STEP 4: GLUE MANIFOLDS INTO TEE'S WITH HOLES ON THE SIDES.

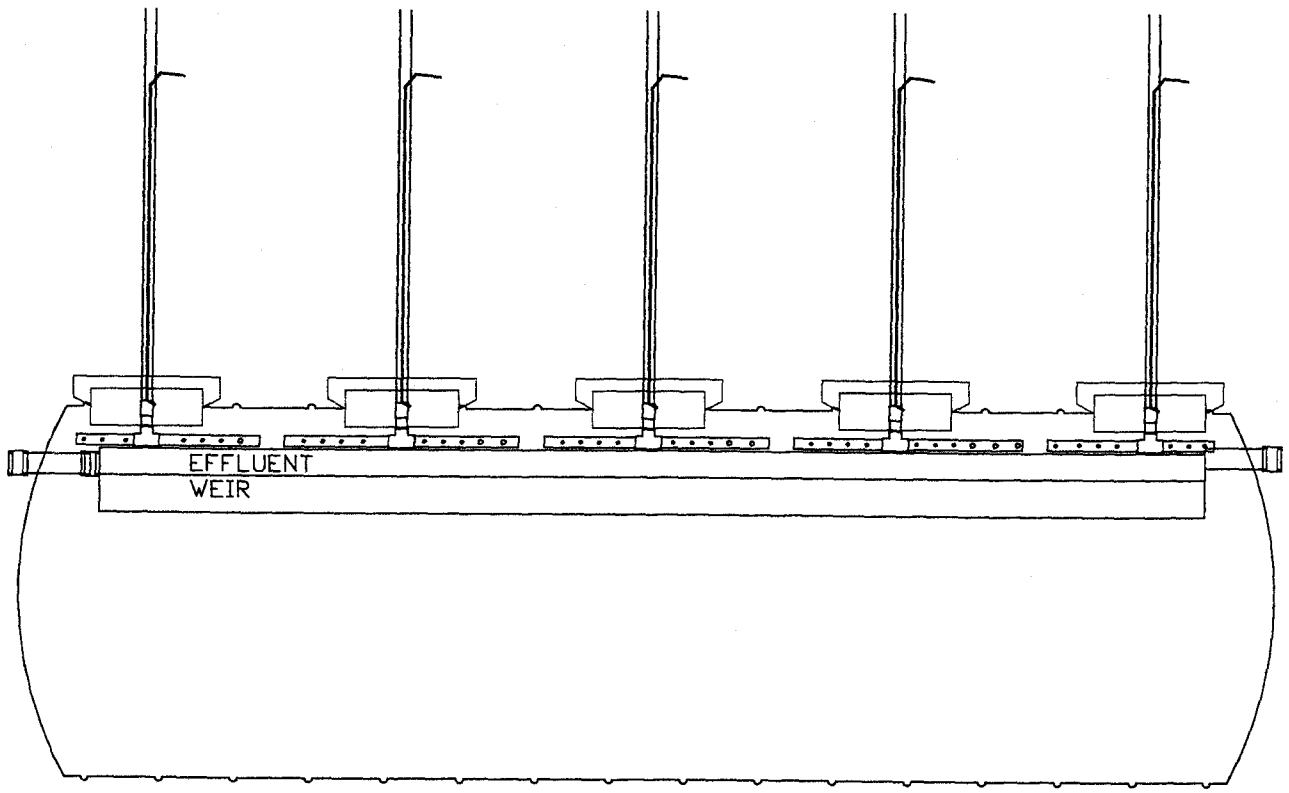

STEP 5: ALLOW DRY TIME AND THEN LOOSEN CLAMPS AND LOWER INTO BOTTOM OF V IN THE TANK

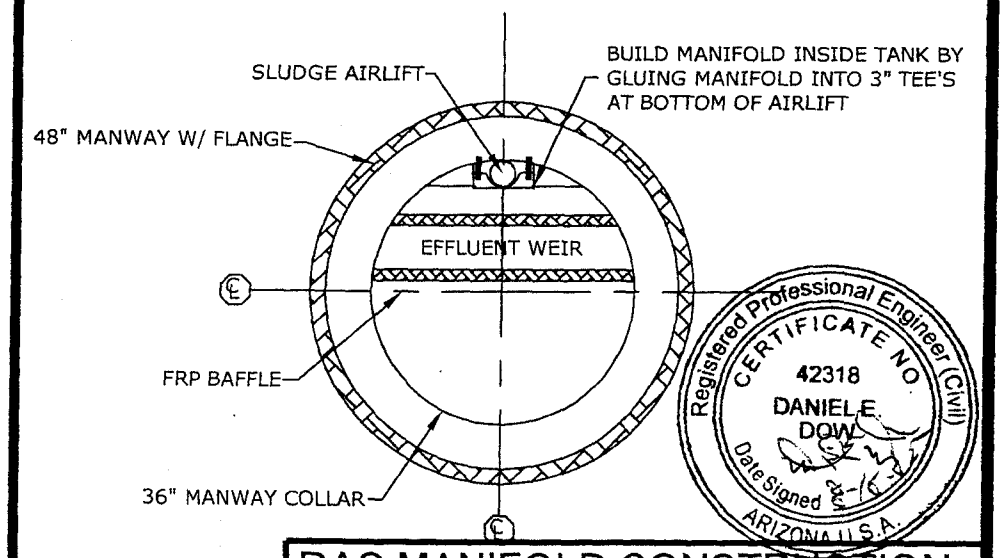

RAS MANIFOLD CONSTRUCTION

THE CLARIFIER

CONSTRUCTION DETAILS

SANTEC CORPORATION
CASTLE ROCK, COLORADO
PHONE: 303.660.9211 FAX: 303.660.2180

DATE	8-16-05
DRAWN BY:	NAW
REV	
SHEET #:	CD6

STEP 1: DRILL AND RIVIT THE MANWAY IN 4 PLACES TO THE COLLAR

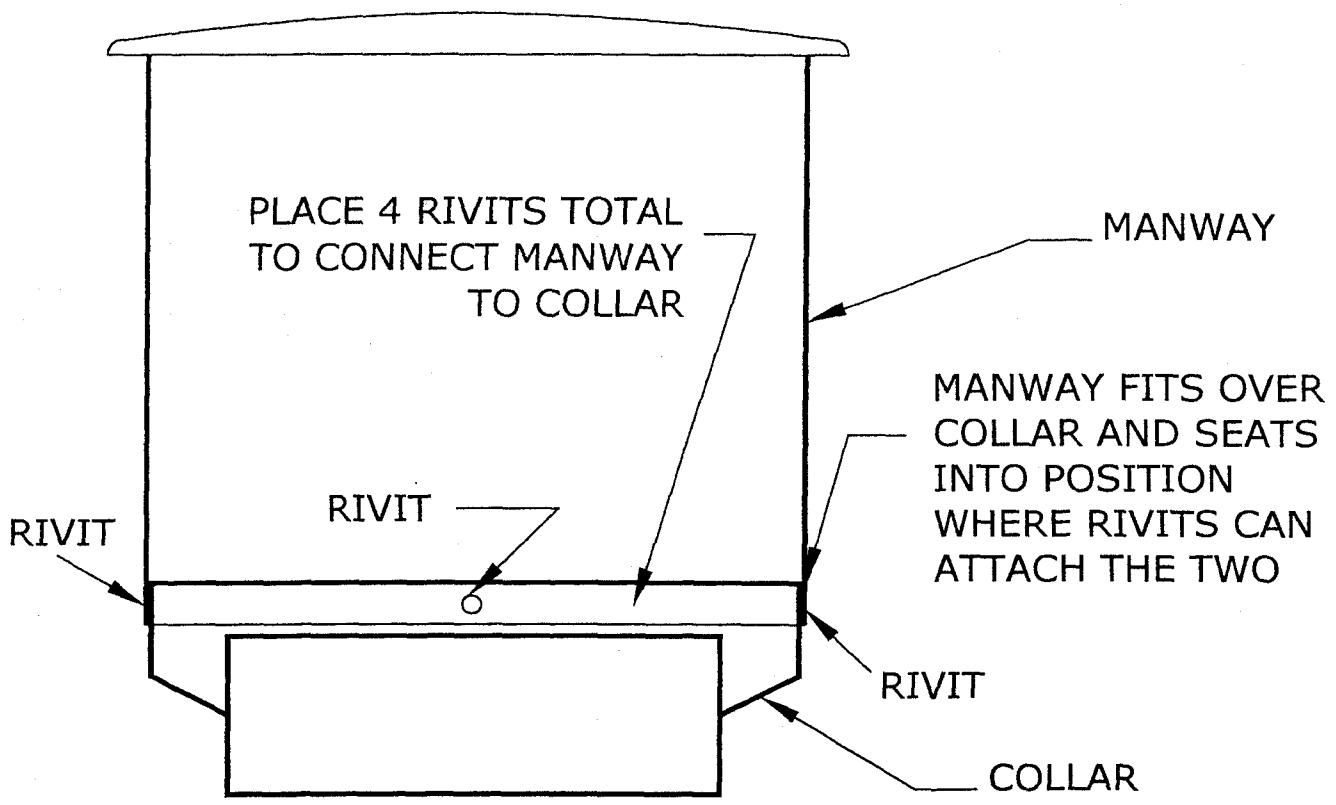

STEP 2: DRILL HOLES IN MANWAY 14" DOWN FROM FLANGE. LINE HOLES UP WITH AIRLIFTS INSIDE AND PERPENDICULAR TO THE TANK

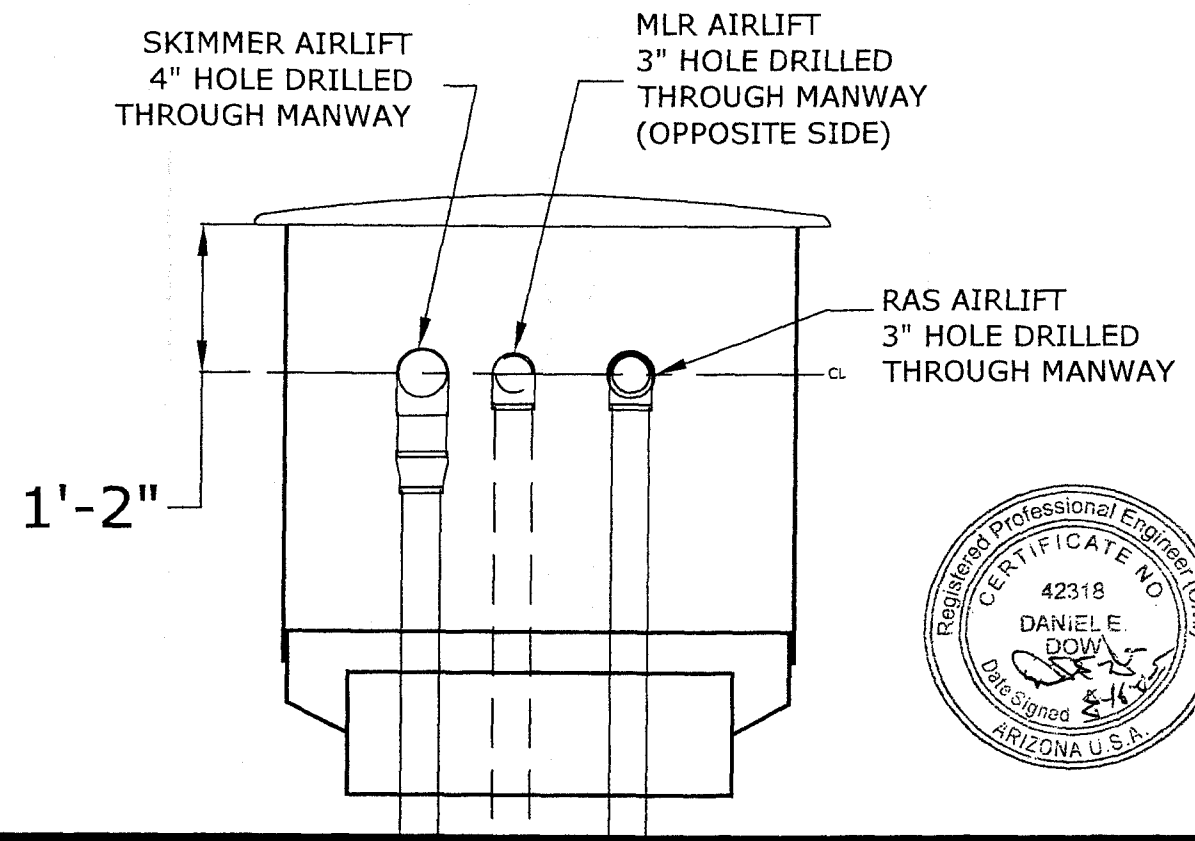

STEP 3: EXTEND AIRLIFTS IF NEEDED AND USE FLEXIBLE 90 ELBOW'S TO CONNECT TO PIPE RUNNING OUT OF MANWAY

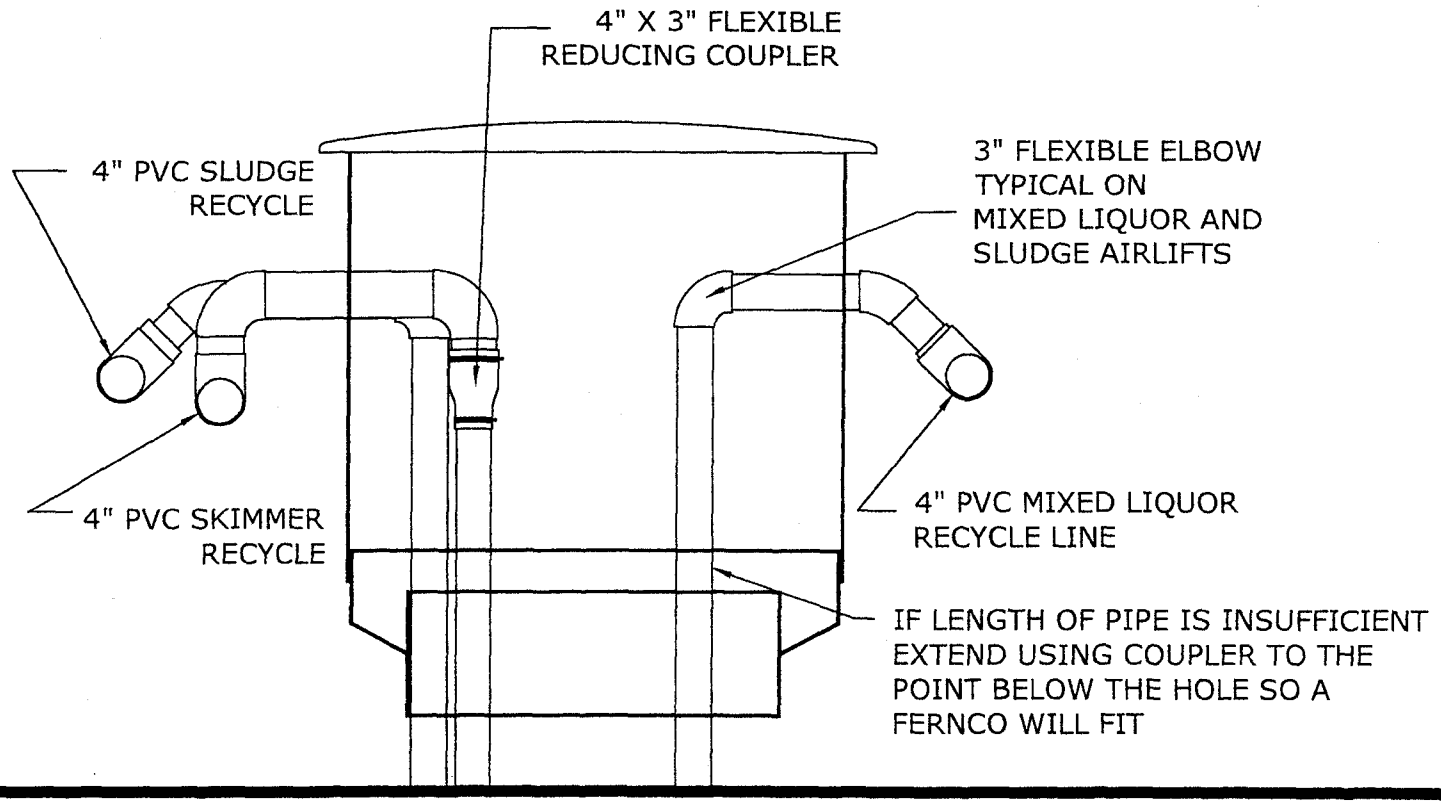

STEP 4: PLACE SLIDE GATE VALVES ON END OF RECYCLE LINES WITH PVC 90 ELBOWS TO DIRECT THE FLOW DOWN INTO THE TANK

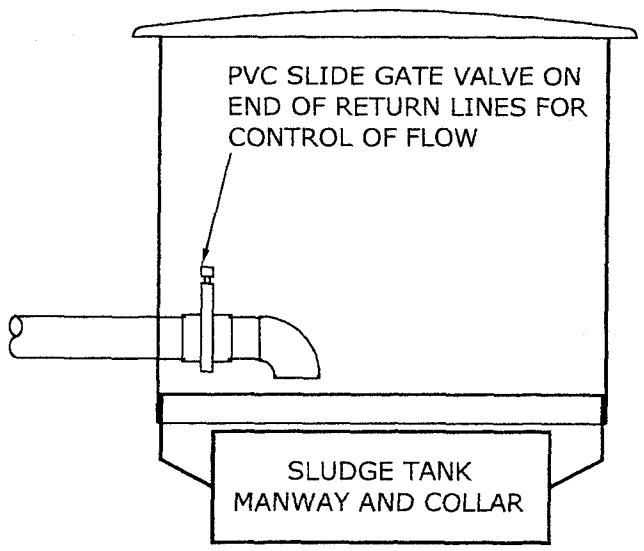

STEP 5: ATTACH BUNGEES TO LID AND MANWAY FOR SECURING LID. ATTACH BUNGEE ON OPPOSITE SIDE OF MANWAY LIP

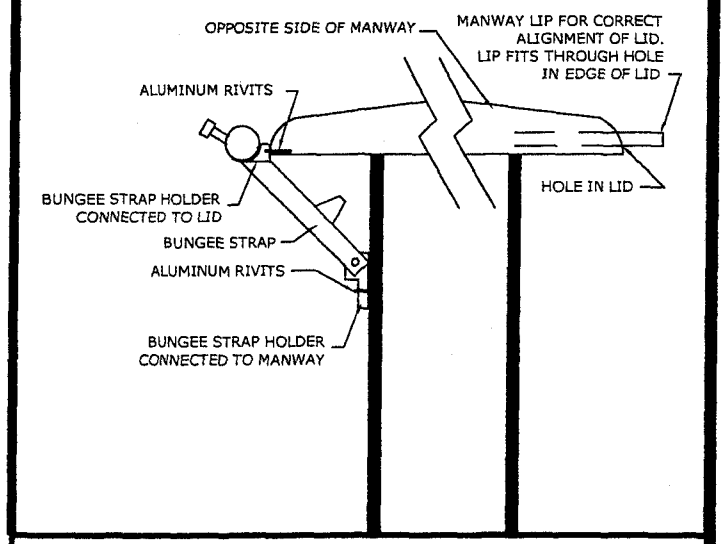

INSTALLING MANWAYS

CONSTRUCTION DETAILS

Santec
SANTEC CORPORATION
CASTLE ROCK, COLORADO
PHONE: 303.660.9211 FAX: 303.660.2180

DATE: 8-16-05
DRAWN BY: NAW
REV:
SHEET #: CD7

EXAMPLE FLOW EQ TANK WITH BREAK AWAY RAILS FOR PUMPS. ALSO SHOWING ELECTRICAL PANEL AND DIFFUSERS

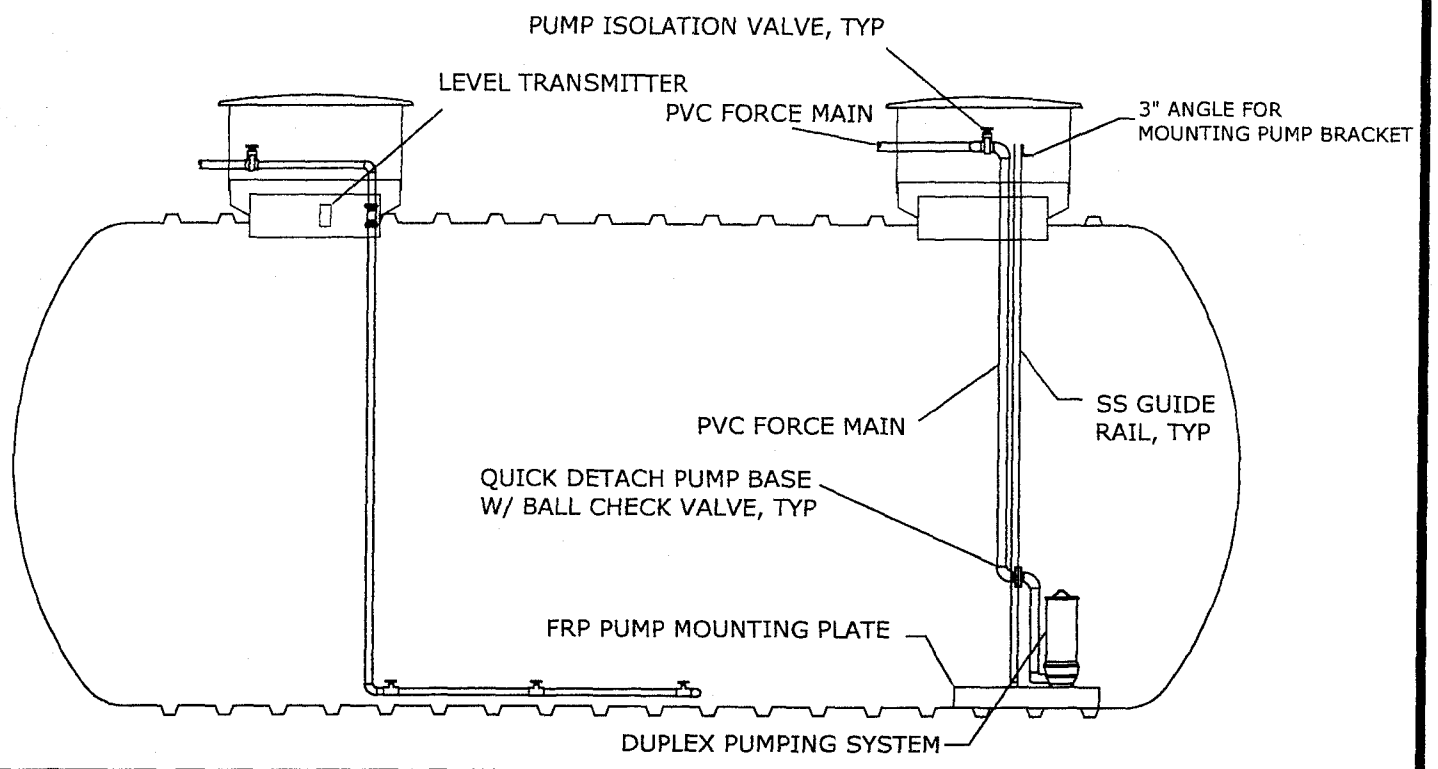

TYPICAL CROSS SECTION OF FLOW EQ TANK SHOWING WATER LEVEL PUMP SETTINGS

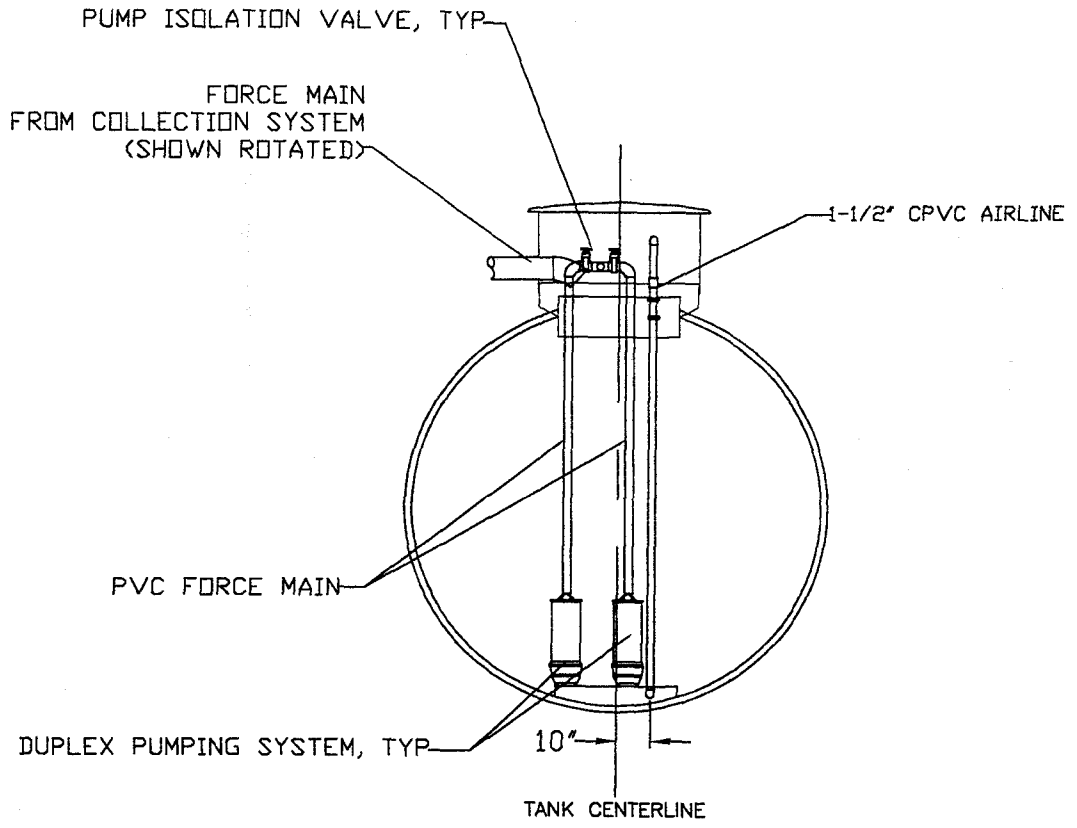

MOUNTING BREAK AWAY PUMP BRACKETS

STEP 1: MOUNT FRP BRACING INSIDE MANWAY SO THAT PUMPS WILL BE CENTERED
STEP 2: MOUNT BREAK AWAY RAILS TO BRACE
STEP 3: PLUMP RAILS AND DRILL AND TAP BOTTOM OF RAIL INTO PUMP MOUNTING PLATE

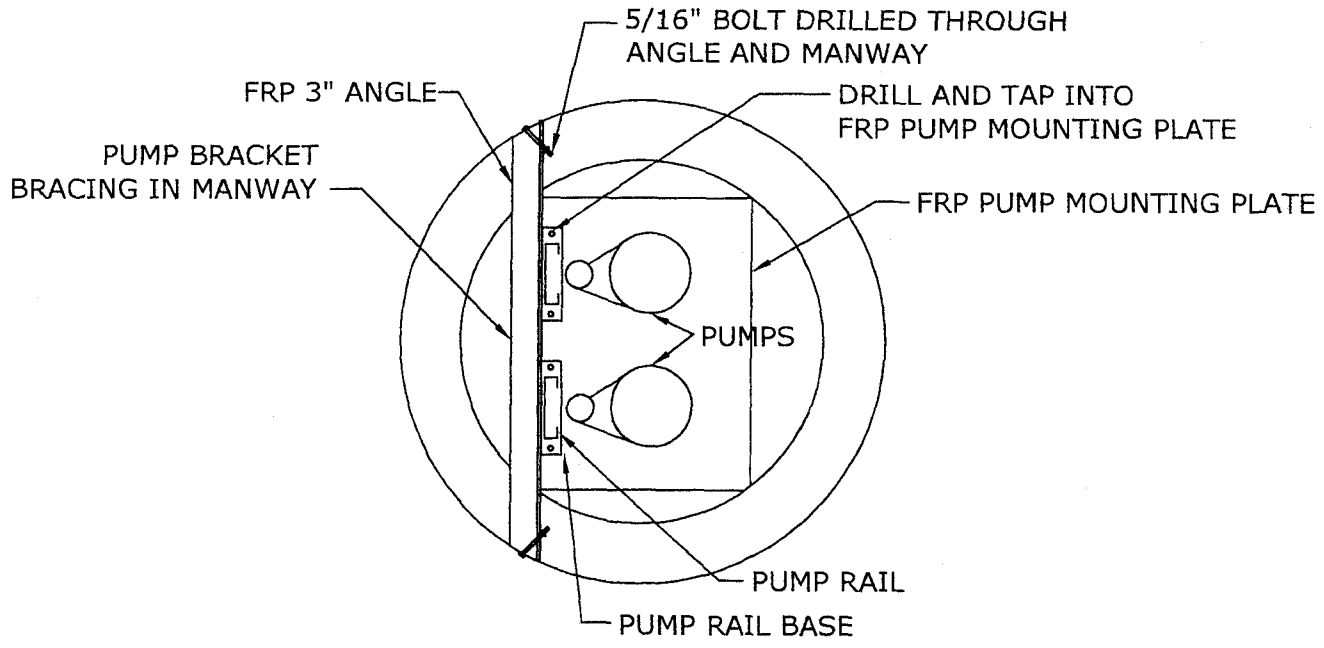

TYPICAL PUMP CORD BOX MOUNTED TO SIDE OF MANWAY

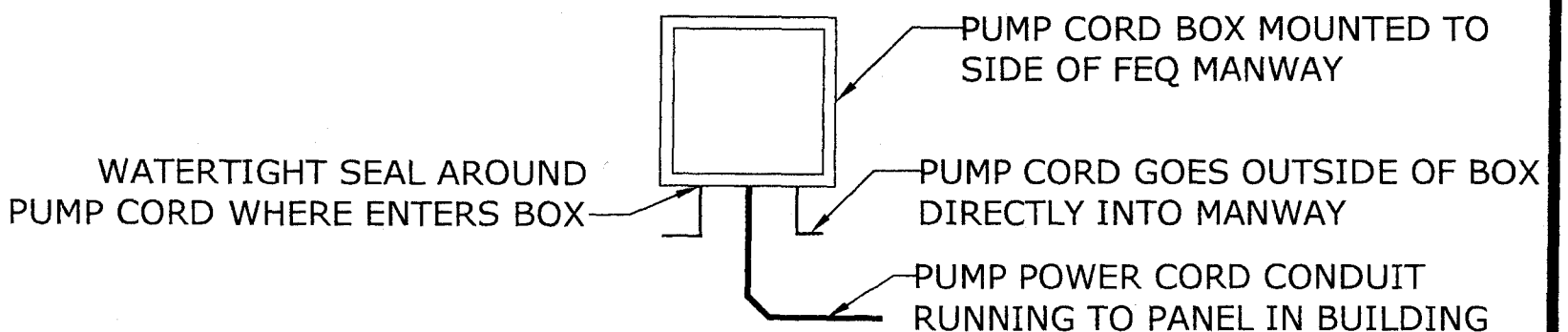

Registered Professional Engineer (Civil)
CERTIFICATE NO.
42318
DANIEL E. DOW
Date Signed
ARIZONA U.S.A.

FLOW EQ CONSTRUCTION

FLOW EQ TANK

CONSTRUCTION DETAILS

Santec
SANTEC CORPORATION
CASTLE ROCK, COLORADO
PHONE: 303.660.9211 FAX: 303.660.2180

DATE: 8-16-05
DRAWN BY: NAW
REV:
SHEET #: CD8

DIFFUSER AIRLINE DETAIL N.T.S.

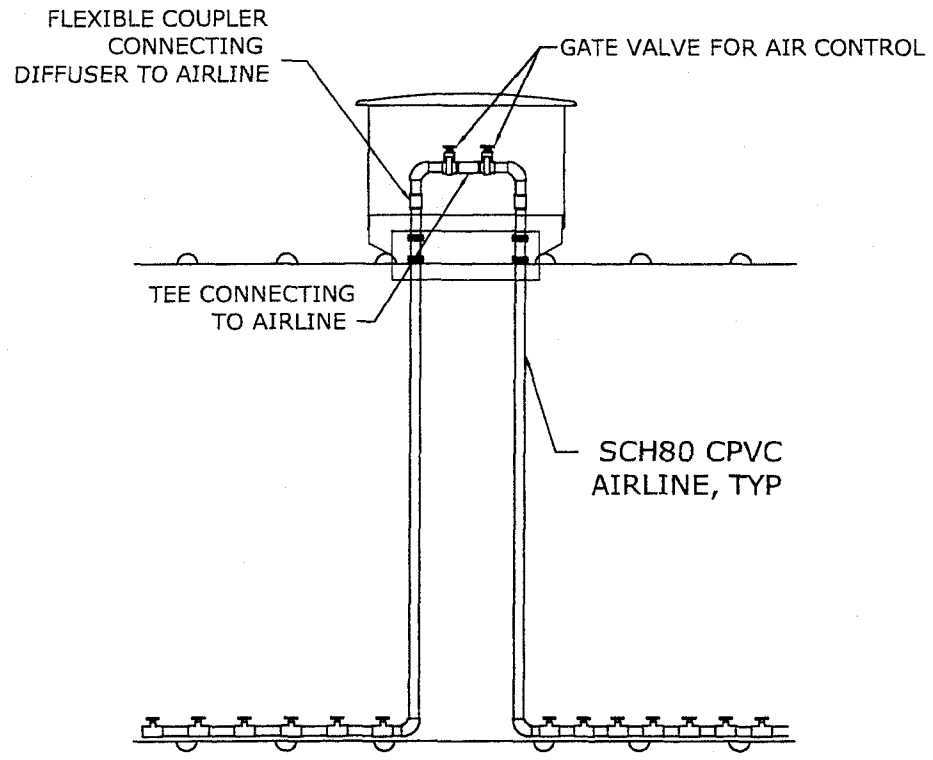

CLARIFIER AIRLINE DETAIL N.T.S.

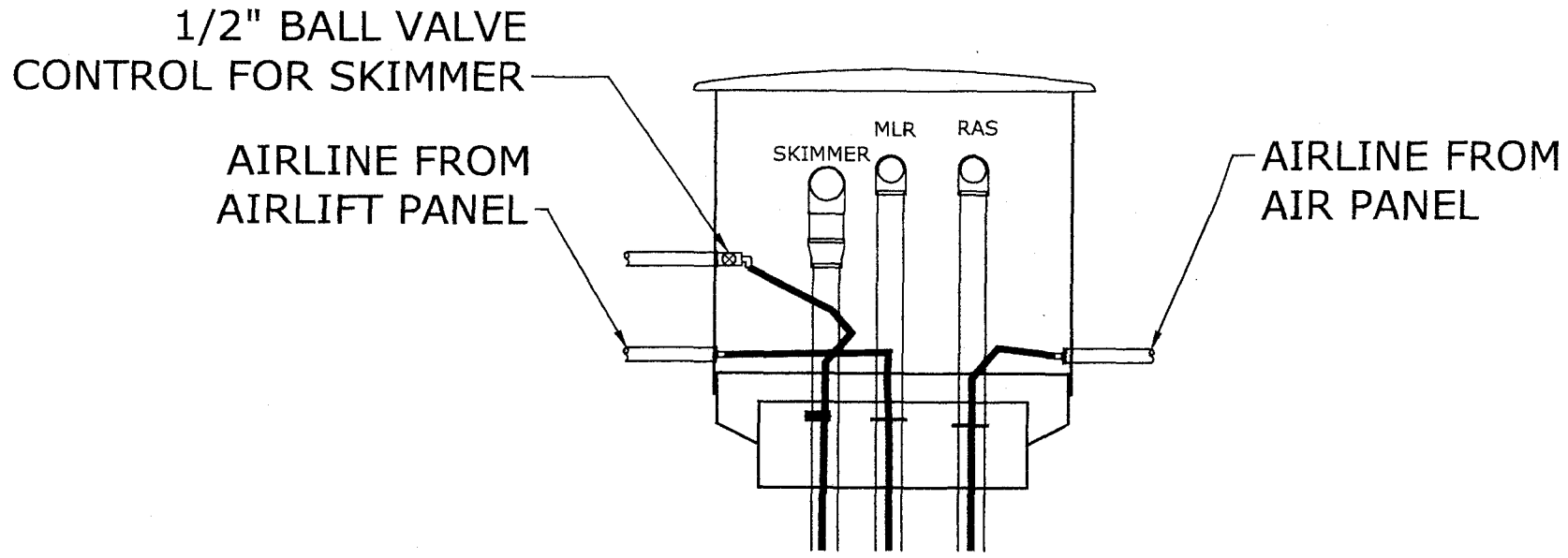

MOUNTING AIR PANEL

STEP 1: DRILL HOLES FOR 5/16" BOLTS THROUGH ANGLE AND INTO MANWAY

STEP 2: PLACE BOLTS THROUGH HOLES AND PUT NUTS ON INSIDE OF MANWAY

STEP 3: LEVEL PANEL AND TIGHTEN BOLTS

AIR PANEL DETAIL

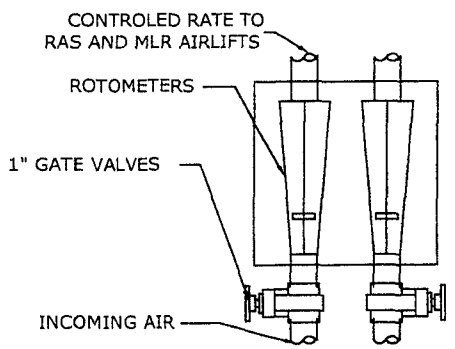

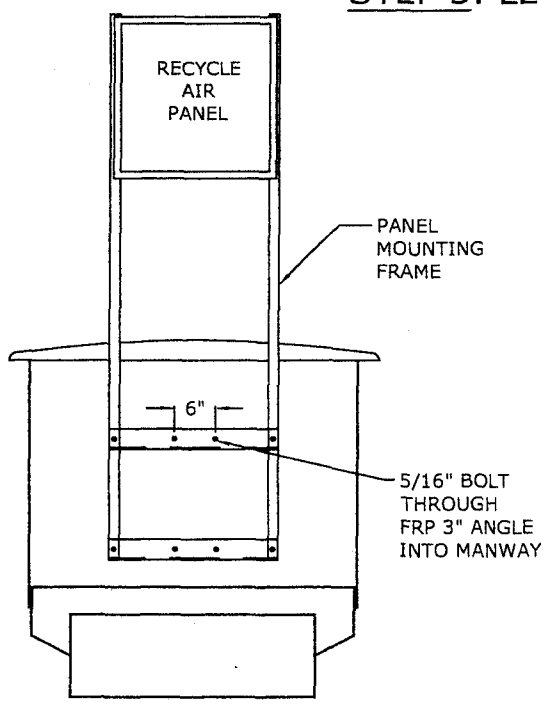

FRONT VIEW

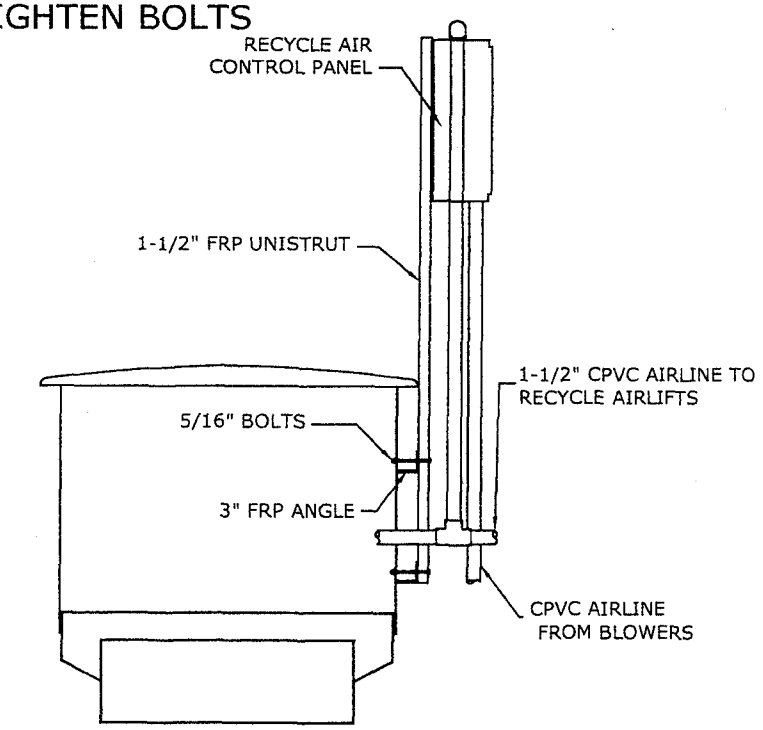

SIDE VIEW

FORCE MAIN DETAIL N.T.S.

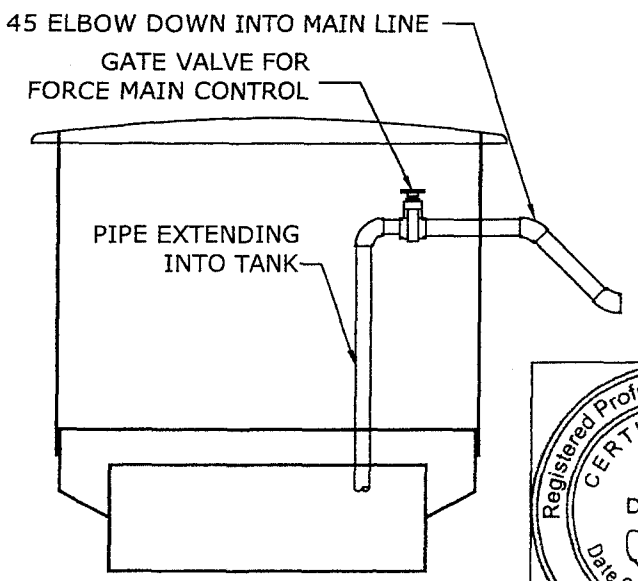

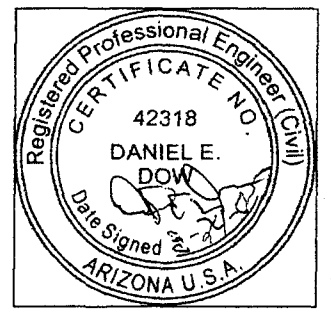

AIRLINE/FORCE MAIN DETAIL

CONSTRUCTION DETAILS

Santec
SANTEC CORPORATION
CASTLE ROCK, COLORADO
PHONE: 303.660.9211 FAX: 303.660.2180

DATE: 8-16-05
DRAWN BY: NAW
REV:
SHEET #: CD9

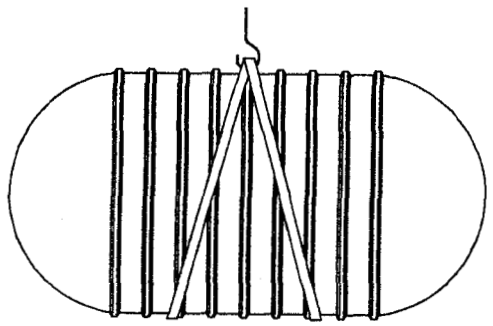

LIFTING:

Use a crane or other appropriate lifting equipment to move or lift the treatment tank(s). Always use nylon straps that reach completely around each tank or ALL lifting lugs if applicable. Guide the tank(s) with guidelines. Do NOT use chains or cables around the tank(s). Tank(s) should NOT be dropped, rolled or impacted.

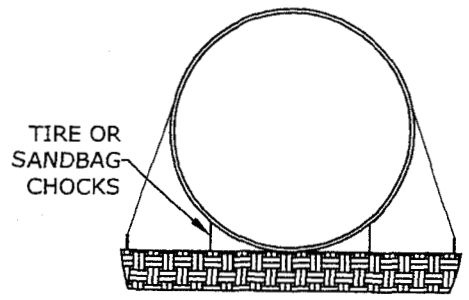

CHOCK TANKS:

Tank(s) must be set on smooth ground, free of rocks and foreign objects. Chock the tank(s) until ready for installation, and tie them down if winds are expected. Use minimum 1/2" diameter nylon or hemp rope over each tank end and tie to wooden stakes of adequate size.

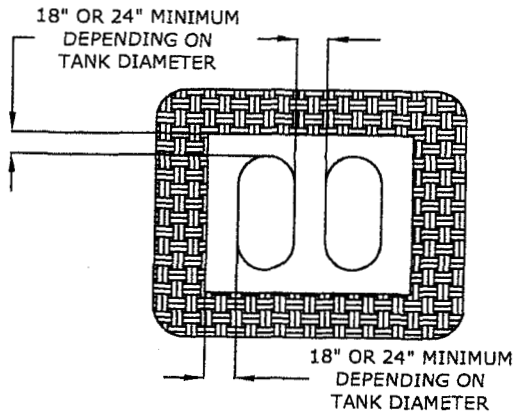

STABLE WALLS:

Stable walls are those which normally can be made vertical from bed to grade without use of shoring or sheet piling.

8' Diameter tanks - Hole must be large enough to allow a minimum of 18" from ends and sides of tanks to hole walls and a minimum of 18" between tanks at the ribs.

10' and 12' Diameter tanks - Hole must be large enough to allow a minimum of 24" from ends and sides of tanks to hole walls and a minimum of 24" between tanks at the ribs.

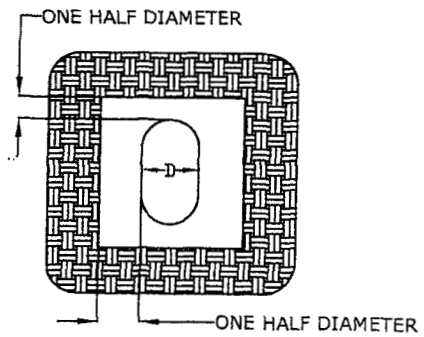

UNSTABLE WALLS:

Unstable walls are those with soils having less than 750 psf cohesion as calculated from an unconfined compression test, or soils with an ultimate bearing capacity of less than 3,500 psf. A qualified soil testing laboratory can provide data and recommendations. Hole must be large enough to allow a minimum of one half the tank diameter from ends and sides of tank(s) to hole walls. Spacing between tanks is the same as for stable walls.

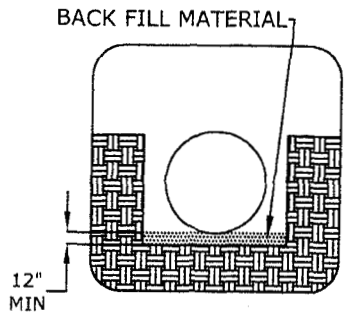

BURIAL DEPTH AND COVER:

Hole must be deep enough to (1) provide for a minimum bed of 12" of back fill material at the hole bottom and (2) place the tank(s) at the elevation specified on the Santec drawing "Hydraulic Profile".

Cover depth *should be a minimum* of 24" over the crest of the tank(s). Finished grade over the tank(s) should not be less than the surrounding grade level. Manway riser extensions are available from Santec. Do NOT allow equipment or traffic to drive over treatment tank(s).

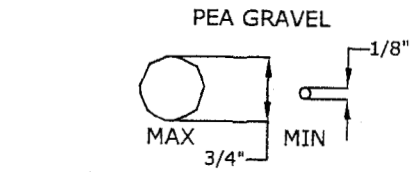

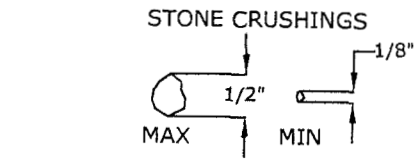

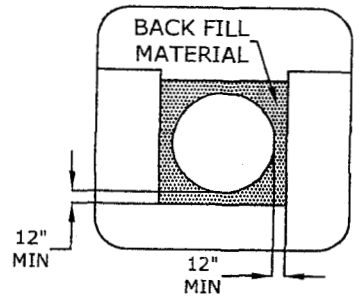

BED AND BACK FILL MATERIAL

The backfill material surrounding a tank *is a critical part of a fiberglass tank* installation.

The tank(s) should be surrounded by a 12" minimum layer of washed, dry and free flowing back fill material conforming to ASTM C-33 para. 9.1, sizes 6 through 8. No more than 5% (by weight) of the material may pass through a #8 Sieve.

Pea gravel(recomended) - A mix of rounded aggregate with particle sizes not less than 1/8" nor more than 3/4" in diameter.

Stone or gravel crushings(alternative) - A mix of angular aggregate with particle size not less than 1/8" nor more than 1/2" in diameter.

Do NOT use other materials. The tank warranty is voided if other than aproved(above) bed and back fill materials are employed without written approval from Santec Corporation.

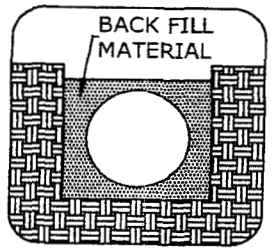

FILLING OF TANKS:

Do NOT fill tank(s) until back fill material has been brought to the tops of the tank(s). Never add water for hold down in dry hole conditions until the back filling is complete.

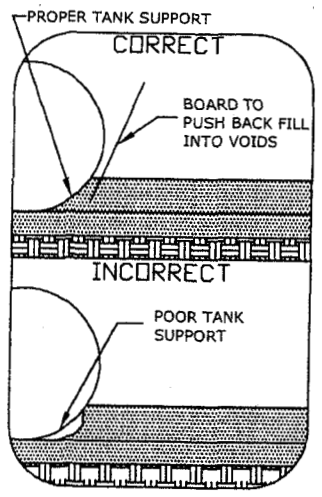

DRY HOLE INSTALLATION

Once tank has been placed at the proper elevation on the minimum 12" of correct bedding material, tank can be back filled to the top of the tank. Back fill should be free of large rocks, debris or foreign materials. As tank is back filled care must be taken to ensure that back fill is pushed completely around the tank, especially under the tank bottom, between ribs and under the end caps. There should be no voids between the tank and back fill. A board or similar device should be used to push back fill under the tank.

CAUTION - Do NOT place tank(s) directly on concrete slab or grout tank(s) in wet concrete. Do NOT place tank(s) on timbers, beams or cradles.

Unanchored tank(s) installed with back fill to the top of the tank(s), should be filled with water as ballast. Do NOT put water in tank(s) before back fill material is even with the top of the tank(s).

INSTALLATION INSTRUCTIONS

Fiberglass underground tanks must be installed according to these instructions and NFPA 30 and 31. Local codes may apply and should be consulted. Failure to follow these installation instructions will void the warranty and may result in tank failure. Proper installation of fiberglass underground tanks helps to prevent tank damage and insures long term corrosion proof service. It is imperative to read, understand and follow these instructions. Fiberglass underground tanks require the back fill material to provide as much as 90% of the tank support under certain stress conditions. The installing contractor must use the correct bed and back fill material and follow these instructions. For questions contact:

SANTEC CORPORATION
220 MALIBU STREET
CASTLE ROCK, CO 80109
(303) 660-9211

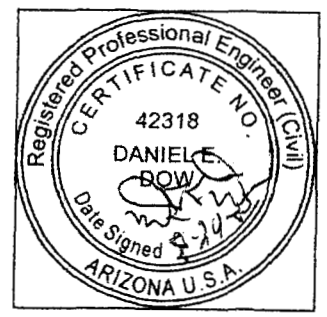

TANK INSTALLATION 1

CONSTRUCTION DETAILS

Santec
SANTEC CORPORATION
CASTLE ROCK, COLORADO
PHONE: 303.660.9211 FAX: 303.660.2180

DATE:	8-16-05
DRAWN BY:	NAW
REV	
SHEET #:	CD10

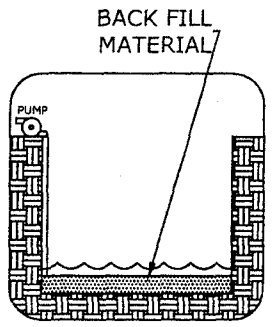

WET HOLE INSTALLATION

Anchoring is recommended in clay, if high water table exists or if high water conditions could develop after tank installation.
Water level in the hole should be maintained at the lowest practical level during installation. A system of well points and pumps is the recommended method to minimize water level in the hole. The number of well points required will depend on the water flow rate into the hole. The hole bottom should be level, free of rocks and debris, and covered with at least on foot of recommended back fill material.

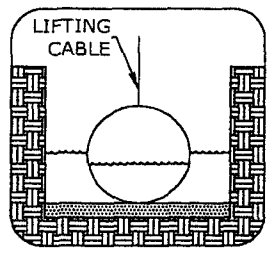

BALLAST:

Clean water only should be used to ballast tank(s). Place tank(s) in the hole, adding only enough ballast to sink it. Ballast level in tank(s) must NEVER exceed water level in hole during installation. While adding ballast, use only lifting cable to keep tank in position. The lifting cable must be carefully tended. Do NOT place tank(s) on timbers, beams or cradles.

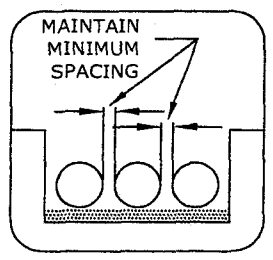

LEVEL TANKS:

While leveling tank(s), insure that minimum distances between tanks are maintained, and that piping is properly aligned.

FINAL GRADE:

Back fill procedure should be the same as described for dry hole. Care should be taken to ensure there are no voids between the tank(s) and the back fill. Excavation should be brought to grade with approved back fill material. Provide drainage of surface water away from the system. The site can be landscaped as desired.

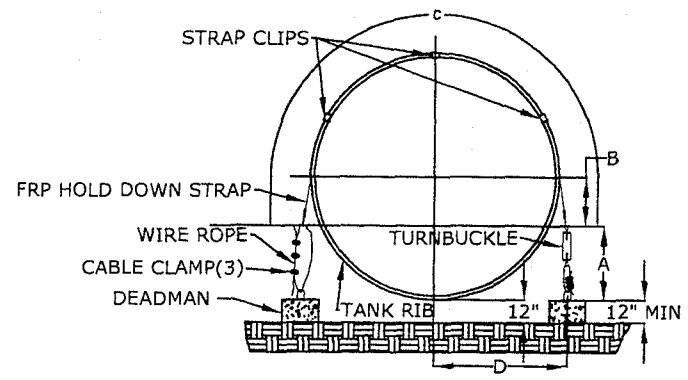

TANK DIA	DIM A	DIM B	DIM C MIN	DIM C MAX	DIM D
8'	31"	15"	52"	58"	15'-1"
10'	45"	15"	69"	75"	18'-8 3/4"
12'	50"	23"	87"	93"	22'-6 3/4"

ANCHORING:

Use fiberglass hold down straps on top of all designated tank ribs(see Santec tank drawings or contact Santec Corporation for proper ribs). Anchor points at bottom of hole must be aligned with designated rib to within + or - one inch. Do not use straps or cables between ribs of tank(s). All straps should be tightened to give "snug" fit of strap to tank.

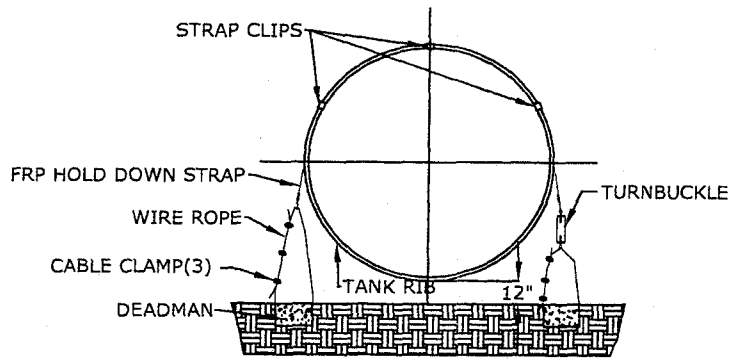

DEADMEN:

Deadmen should be designed so that the weight of the deadmen combined by the weight of the back fill over the deadmen and the tank, is more than enough to counteract the buoyant force on the tank should the tank be empty at the time of a high water condition. The deadmen should contain anchor bolts for tank strap attachment in the locations described above. Consult the project engineer for the deadmen design.

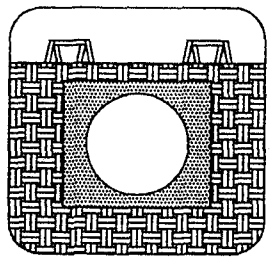

BARRICADE:

If future work is to be performed in the vicinity of the plant, mark the location of the treatment tank(s) well so that equipment is not run over the tank(s) or piping.

INSTALLATION INSTRUCTIONS

Fiberglass underground tanks must be installed according to these instructions and NFPA 30 and 31. Local codes may apply and should be consulted. Failure to follow these installation instructions will void the warranty and may result in tank failure. Proper installation of fiberglass underground tanks helps to prevent tank damage and insures long term corrosion proof service. It is imperative to read, understand and follow these instructions. Fiberglass underground tanks require the back fill material to provide as much as 90% of the tank support under certain stress conditions. The installing contractor must use the correct bed and back fill material and follow these instructions. For questions contact:

SANTEC CORPORATION
220 MALIBU STREET
CASTLE ROCK, CO 80109
(303) 660-9211

TANK INSTALLATION 2

CONSTRUCTION DETAILS

SANTEC CORPORATION
CASTLE ROCK, COLORADO
PHONE: 303.660.9211 FAX: 303.660.2180

DATE: 8-16-05
DRAWN BY: NAW
REV:
SHEET #: CD11

5

TABLE OF CONTENTS SECTION 5

FLAGSTAFF MEADOWS SITE 2 WWTP

WASTEWATER TREATMENT PLANT DESIGN REPORT AND SUBMITTAL

1. Norweco Bio-Neutralizer tablets (Dechlor) MSDS
2. Methanol MSDS
3. Liquid Chlorine MSDS

NORWECO®
NORWALK WASTEWATER EQUIPMENT COMPANY

BIO-NEUTRALIZER®

DECHLORINATION TABLETS

GENERAL SPECIFICATIONS

Bio-Neutralizer dechlorination tablets shall be formulated and produced to chemically neutralize both free and combined chlorine in water, wastewater and process water treatment systems. Bio-Neutralizer tablets shall be engineered to dissolve slowly and evenly, maintaining effluent quality without any loss of dissolved oxygen or increase in BOD_5. The tablets shall be 2 5/8" diameter, compressed to 13/16" thickness with an approximate weight of 5 oz. and incorporate beveled edges to stabilize chemical release and to minimize maintenance requirements. Sulfur dioxide gas or liquid sodium metabisulfite systems create serious health hazards and handling concerns and therefore shall not be considered for this application.

TABLET PROPERTIES AND USAGE

When used as directed, Bio-Neutralizer dechlorination tablets shall provide an environmentally safe dose of sodium sulfite capable of neutralizing free and combined chlorine present in treated water, wastewater or process water. Research shows that high concentrations of sodium sulfite will degrade beneficial dissolved oxygen in receiving environments, producing harmful effects on the ecosystem. Bio-Neutralizer tablets shall provide consistent reduction or elimination of residual chlorine without affecting water quality, dissolved oxygen or other discharge parameters. A unique combination of sustained release agents and sodium sulfite shall maintain a consistently uniform application rate regardless of flow, temperature or humidity. Bio-Neutralizer dechlorination tablets shall generally lower chemical consumption and provide reliable reduction of chlorine residual in a more thorough, safe and economical manner than simple compressed sodium sulfite. Therefore, the use of other tablets of similar composition shall not be considered for this application.

PRODUCT APPLICATION

The 2 5/8" diameter by 13/16" thick Bio-Neutralizer tablets shall be effective in the reduction or elimination of residual chlorine without releasing excess quantities of sodium sulfite into the receiving environment. Bio-Neutralizer tablets shall maintain a consistent application rate at intermittent peak flow factors as high as four and shall provide reliable reduction of residual chlorine even when the significant runoff period is six hours. Bio-Neutralizer tablets shall be considered non-hazardous under U.S. Department of Transportation (DOT), U.S. Environmental Protection Agency (USEPA), RCRA, CERCLA and Sara Title III listings and consist solely of commercial grade or technical grade ingredients. The following is a list of some common applications where Bio-Neutralizer dechlorination tablets may be utilized: home wastewater treatment plants, municipal wastewater plants, septic tanks – sand filters, extended aeration plants, wastewater treatment lagoons, package wastewater treatment systems, spray irrigation systems, potable water filtration backwash, municipal water plants and water towers.

DESIGN DATA

Tablet Size	2 5/8" diameter, 13/16" thick	Inert Ingredient Content	65%
Approximate Tablet Weight	5 oz. (140 grams)	U.S. DOT Hazard Class	Non-hazardous
Active Ingredient	Sodium Sulfite – Na_2SO_3	Appearance Characteristics	Green Tablet with Herbal Odor
Active Ingredient Content	35%	Special Design Features	Beveled edges

SPECIAL INSTRUCTIONS

Read the entire product container label, the Material Safety Data Sheet and the Bio-Neutralizer Safety and Tablet Properties and Usage instructions before handling or use. Always wear rubber gloves and either safety goggles or a face shield when handling Bio-Neutralizer tablets or working with a tablet feeder or chemical feed tube. Refer to tablet feeder manufacturer's instructions to determine the correct number of tubes to fill with Bio-Neutralizer tablets. Store Bio-Neutralizer dechlorination tablets only in their tightly sealed original container. Do not store in direct sunlight or areas where temperature may exceed 140° F. Bio-Neutralizer dechlorination tablets are a strong reducing agent containing sodium sulfite. Contact with oil, petroleum products or oxidizing agents, such as Bio-Sanitizer disinfecting tablets or any tablet used for chlorination, is extremely dangerous. Do not mix with swimming pool chemicals. Bio-Neutralizer dechlorination tablets should be stored in a cool, dry, well ventilated area for maximum shelf life. To prevent moisture contamination, exercise care when removing tablets from the container or filling feed tubes. Avoid contact with skin, eyes, mouth, respiratory system or clothing.

PRODUCT STORAGE

Bio-Neutralizer dechlorination tablets are a strong reducing agent. Tablets should be stored in a cool, dry, well ventilated area, away from heat or flame. Avoid storage in areas subject to direct sunlight or temperature in excess of 140° F. Stock should be rotated on a first-in, first-out basis. Bio-Neutralizer dechlorination tablets must be stored in their original container with lid tightly closed. Do not allow moisture to enter the pail during storage or while removing tablets for use. Moisture contamination may affect tablet integrity and performance. Do not reuse the empty container.

SAFETY INSTRUCTIONS

Before handling Bio-Neutralizer tablets, carefully read the container label and the Product Storage, Tablet Handling, Caution and First Aid sections of these instructions. Do not add Bio-Neutralizer tablets to a feed tube containing any other product, particularly oil and petroleum products or swimming pool chlorine. Such action may cause a violent reaction leading to fire or explosion. Do not contaminate food or feed during the use, storage or disposal of Bio-Neutralizer tablets or the cleaning of chemical feed equipment. Always wear rubber gloves and either safety goggles or a face shield when handling Bio-Neutralizer tablets or working with any tablet feeder or feed tube. Avoid contact with skin, eyes, mouth, respiratory system or clothing. Keep this product only in its tightly closed original container. Store only in a cool, dry, well ventilated area.

TABLET HANDLING

Use only clean, dry utensils. Do not add Bio-Neutralizer dechlorination tablets to any device containing remnants of any other product – contact with oxidizers, such as Bio-Sanitizer disinfecting tablets or any other tablets used for chlorination can cause fire and the release of toxic gas. Read the entire Bio-Neutralizer tablet container label and these instructions carefully before handling this product. Use only in well ventilated areas. Bio-Neutralizer tablets are not rated a hazardous substance by the U.S. DOT or USEPA, but necessary care should be taken in the use and handling of the tablets. Collected material can be dissolved in water, exercising caution as the solution can get hot. Dispose of dissolved material in any appropriate industrial waste collection system. Consult local, state and federal regulatory agencies before disposing of any material.

FEED TUBE LOADING INSTRUCTIONS

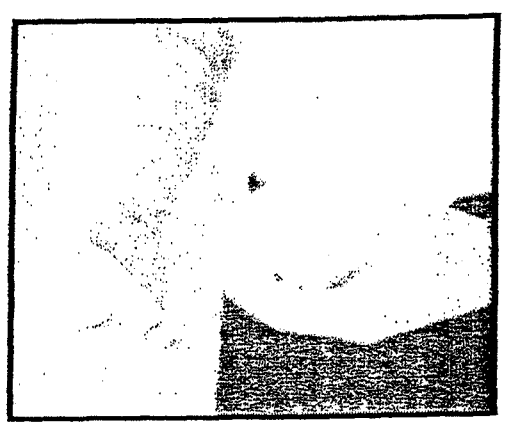

1. Remove feed tube from dispenser housing.
2. Remove protective cap from feed tube; place cap in a clean, dry area.
3. Remove any tablet residue by gently tapping feed tube on concrete or stone surface. If tablets other than Bio-Neutralizer have been used, rinse tube and cap with fresh water until clean and allow to dry before proceeding.
4. Hold tube, slotted end up, at a 45° angle and slide Bio-Neutralizer dechlorination tablets into the tube, one tablet at a time.
5. Ensure that all tablets lie flat, on top of one another, in the feed tube.
6. Use your gloved hand to retain tablets inside the open end of the inverted tube while filling.
7. Carefully return tube to upright position.
8. Replace the cap securely.
9. Place tube back into housing, slotted end down.
10. Be sure feed tube is fully engaged and rests evenly on the floor of the housing.
11. If the tablet feeder incorporates multiple feed tubes, consult the manufacturer's instructions to determine the correct number of tubes to be filled and their placement.

CAUTION

Do not mix Bio-Neutralizer dechlorination tablets with acids or oxidizing agents such as Bio-Sanitizer disinfecting tablets or other tablets used for chlorination – fire or explosion could result. Keep out of the reach of children. Avoid contact with skin, eyes, mouth, respiratory system or clothing – failure to do so may cause irritation on contact. Wear rubber gloves and either safety goggles or a face shield when handling this product. Product will form sodium sulfide at 600° C. At 900° C sulfur dioxide is formed. Inert ingredients could support combustion. Use self contained breathing apparatus for fire fighting.

FIRST AID INSTRUCTIONS

If contact with skin occurs, wash with water for 15 minutes. If irritation persists, seek medical attention.
If eye contact occurs, flush with water for at least 15 minutes. Get immediate medical treatment.
If swallowed, promptly drink large quantities of water or milk. Induce vomiting. Avoid alcohol. Call physician immediately.
If inhaled, move victim to fresh air. If difficulty in breathing persists, get immediate medical attention.
In case of fire, immediately evacuate the area and notify the fire department.

MATERIAL SAFETY DATA SHEET
BIO-NEUTRALIZER® DECHLORINATION TABLETS

EMERGENCY TELEPHONE: (800) 424-9300

DATE PREPARED: JANUARY 1999

NOTE: THIS PRODUCT IS NOT RATED A HAZARDOUS MATERIAL BY THE U.S. DEPARTMENT OF TRANSPORTATION OR THE U.S. ENVIRONMENTAL PROTECTION AGENCY. THE FOLLOWING DATA IS FOR INFORMATIONAL PURPOSES ONLY.

I. PRODUCT IDENTIFICATION

TRADE NAME	Bio-Neutralizer®
CHEMICAL	Sodium Sulfite
CHEMICAL ABSTRACT SERVICE NO.	CAS #7757-83-7
CHEMICAL DESCRIPTION	Reducer
FORMULA	Na_2SO_3
U.S. DOT SHIPPING NAME	Non-hazardous tablets, Item NM462202
U.S. DOT HAZARD CLASS	Non-hazardous

II. INGREDIENTS

HAZARDOUS INGREDIENTS	None	
NON-HAZARDOUS INGREDIENTS	Sodium Sulfite	35%
	Inert Ingredients	65% (Includes sustained release agents)

III. PHYSICAL DATA

BOILING POINT AT 760 mm Hg	Decomposes at 900° C
FREEZING/MELTING POINT	Not Applicable
SOLUBILITY IN H_2O; % BY WEIGHT	25% at 80° C
SPECIFIC GRAVITY OF TABLET	2.63 (H_2O = 1)
APPROXIMATE TABLET DENSITY	125 lbs./ft³
pH OF SOLUTION	Alkaline
VOLUME % VOLATILE	Not Applicable
APPEARANCE AND ODOR	Green Tablets with Herbal Odor

IV. FIRE AND EXPLOSION DATA

FLASH POINT	Not Applicable
FLAMMABLE LIMITS IN AIR	Not Applicable
EXTINGUISHING MEDIA	Use extinguishing media appropriate for burning material. Compatible with water fog or spray foam CO_2.
SPECIAL FIRE FIGHTING PROCEDURES	NIOSH/MSHA-Approved, positive pressure, self-contained breathing apparatus with full face piece.
UNUSUAL FIRE & EXPLOSION HAZARD	At 600° C, Sodium Sulfide is formed. At 900° C, Sulfur Dioxide is formed. Inert ingredients could support combustion by burning, yielding carbon dioxide and water. Use self-contained breathing apparatus for fire fighting.

V. HEALTH HAZARD DATA

ACUTE TOXICITY DATA (ANIMAL)	
LC 50 INHALATION	See effects of overexposure.
LD 50 ORAL	2825 MG/KG (Rabbit)
LD 50 DERMAL	See effects of overexposure.
LC 50 AQUATIC	Very high concentrations will chemically deplete dissolved oxygen necessary for aquatic life.
CHRONIC TOXICITY	Sodium Sulfite may cause allergic reactions in sensitive individuals. Contact with strong acids or high temperatures may generate Sulfur Dioxide, which is toxic, corrosive, and hazardous.

VI. EFFECTS OF OVEREXPOSURE

PERMISSIBLE	No permissible exposure limits have been established by OSHA.
ACUTE	
INHALATION	Inhalation of product dust or solution may cause respiratory tract irritation.
EYE	Dust or solution may burn eyes on contact.
SKIN	Product dust or solution may result in skin irritation upon prolonged contact.
INGESTION	Ingestion may irritate gastrointestinal tract. Toxic if taken in large doses.

VII. EMERGENCY AND FIRST AID PROCEDURES

INHALATION	Remove to fresh air. If not breathing, resuscitate and administer oxygen if readily available. Seek medical attention immediately.
EYE CONTACT	Immediately flush with large amounts of water for fifteen (15) minutes, rinsing eye thoroughly. Get medical attention.
SKIN CONTACT	Wash with plenty of soap and water for fifteen (15) minutes. Remove contaminated clothing. If skin irritation occurs, get medical attention. Wash clothing before reuse.
INGESTION	If conscious, drink large quantities of water or milk and induce vomiting. Call a physician immediately. Avoid alcohol. If unconscious, or in convulsions, seek medical attention immediately. Do not give anything by mouth to an unconscious person.

VIII. STEPS FOR MATERIAL SPILL

Spills exceeding 100 pounds should be reported to the local authorities.

1. Contain all spilled material, wearing appropriate protective equipment.
2. Place spilled material in clean, dry containers for disposal. Do not flush to surface water.

WASTE DISPOSAL METHOD

Not rated a hazardous substance by USEPA. Collected material can be dissolved in water, exercising caution. Dissolved material may be discharged into an appropriate industrial waste collection system but consult local, state, and federal regulating agencies before disposing of any material.

IX. SPECIAL PROTECTION INFORMATION

RESPIRATORY PROTECTION	If dusty conditions are encountered, use NIOSH/MSHA respirator with acid gas cartridge and dust pre-filter.
VENTILATION	Store and use in a well ventilated area.
EYE PROTECTION	Chemical safety goggles.
GLOVES	Natural or synthetic rubber.
OTHER PROTECTIVE EQUIPMENT	Boots, aprons, or chemical suits as required to prevent skin contact.

THIS MATERIAL SAFETY DATA SHEET IS OFFERED SOLELY FOR YOUR INFORMATION, CONSIDERATION AND INVESTIGATION. NORWALK WASTEWATER EQUIPMENT COMPANY PROVIDES NO REPRESENTATIONS OR WARRANTIES, EITHER EXPRESSED OR IMPLIED, AND ASSUMES NO RESPONSIBILITY FOR THE ACCURACY OR COMPLETENESS OF THE DATA CONTAINED HEREIN.

ADDITIONAL CHEMICAL PRODUCTS FROM NORWECO

BIO-DYNAMIC® TABLET FEEDERS

Bio-Dynamic tablet feeders are a technological advancement in self-contained dry chemical dosing systems for the treatment of water or wastewater. A low cost, low maintenance and extremely effective method of chemical treatment, Bio-Dynamic feeders have no mechanical components and require no electricity. The safety, accuracy and reliability provided by Bio-Dynamic feeders outperform gas, liquid and ultraviolet systems. With six different models, Bio-Dynamic feeders have multiple installation options that provide maximum flexibility, including direct burial, in-line and contact chamber mounting. Riser assemblies are available to eliminate the need for a manhole or separate enclosure during direct burial installations. Fully serviceable from finished grade, riser assemblies eliminate the need for confined space entry equipment required by OSHA regulations. Direct burial models include trim lines that allow height adjustment on site for each installation. Molded inlet and outlet hubs allow the Bio-Dynamic feeder to be directly connected to treatment system piping without the need for a separate drop box. The tiered flow deck of the Bio-Dynamic feeder accommodates variable, intermittent and surge hydraulic flows into the system. The flow deck directs liquid to the feed tubes during low flows and disperses liquid velocity throughout the feeder during peak flows, resulting in consistent chemical application. Chemical dosage is further controlled by interchangeable weir plates or an optional sluice that can be completely adjusted from a 1" to 3" outlet width. The sluice can be adjusted during tablet feeder operation using only a standard socket wrench with extension.

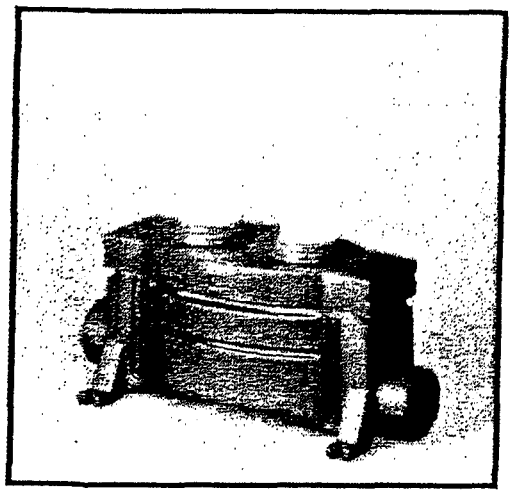

All models are backed by a ten year limited warranty. Standard components include one-piece feed tubes with twist-lock caps, adjustable inlet baffle, molded inlet and outlet hubs, molded mounting feet and interchangeable outlet weir plates.

BIO-SANITIZER® DISINFECTING TABLETS

Bio-Sanitizer disinfecting tablets are uniquely formulated to provide efficient and reliable disinfection of water or wastewater treatment system flows. Bio-Sanitizer tablets provide treatment plant operators a consistent means to meet disinfection standards without exceeding new and stringent limits for total residual chlorine. Produced from a proprietary grade of calcium hypochlorite and containing a minimum of 70% available chlorine, Bio-Sanitizer tablets are registered by the U.S. Environmental Protection Agency and the Ministry of the Environment. With a unique beveled edge, Bio-Sanitizer tablets dissolve slowly and evenly, providing effective, economical bacteria killing power. Bio-Sanitizer disinfecting tablets are packaged in easy to open, resealable 4 lb., 25 lb., 45 lb. and 100 lb. Department of Transportation approved containers.

BIO-GEM® ORGANIC DIGESTER

A blend of bacteria, enzymes and natural growth accelerators, Bio-Gem organic digester effectively digests grease, fats and oils in wastewater treatment systems, lift stations, septic tanks, sand filters, drain lines and commercial grease traps. When used as directed, Bio-Gem liquid will quickly and effectively convert common grease, fats and oils into carbon dioxide and water. This organic digestion process is much more effective and reliable than compounds that merely emulsify the grease, fats and oils, sending the problem to downstream treatment processes. Regular use of Bio-Gem liquid will reduce odors, stabilize effluent quality, reduce system maintenance and minimize tank pump-out frequency. Packaged in one or five gallon containers and 55 gallon drums, Bio-Gem organic digester is environmentally safe and works in aerobic or anaerobic conditions.

DISTRIBUTED LOCALLY BY:

NORWECO®
NORWALK WASTEWATER EQUIPMENT COMPANY

220 REPUBLIC STREET
NORWALK, OHIO, USA 44857-1196
TELEPHONE (419)668-4471
FAX (419)663-5440

Bio-Dynamic®, Bio-Sanitizer®, Bio-Neutralizer®, Bio-Kinetic®, Bio-Static®, Bio-Gem®, Grease Buster®, "BUSTER" logo®, Lift Rail®, Microsonic®, Singulair®, Modulair®, Travalair® and Norweco® are registered trademarks of Norwalk Wastewater Equipment Company, Incorporated.
©MCMXCVIII NORWECO, INC.

MSDS Number: **M2015** * * * * * *Effective Date: **08/10/04** * * * * * *Supercedes: **11/12/01***

MSDS Material Safety Data Sheet

From: Mallinckrodt Baker, Inc.
222 Red School Lane
Phillipsburg, NJ 08865

Mallinckrodt CHEMICALS J.T.Baker

24 Hour Emergency Telephone: 908-859-2151
CHEMTREC: 1-800-424-9300

National Response in Canada
CANUTEC: 613-996-6666

Outside U.S. and Canada
Chemtrec: 703-527-3887

NOTE: CHEMTREC, CANUTEC and National Response Center emergency numbers to be used only in the event of chemical emergencies involving a spill, leak, fire, exposure or accident involving chemicals.

All non-emergency questions should be directed to Customer Service (1-800-582-2537) for assistance.

METHYL ALCOHOL

1. Product Identification

Synonyms: Wood alcohol; methanol; carbinol
CAS No.: 67-56-1
Molecular Weight: 32.04
Chemical Formula: CH3OH
Product Codes:
J.T. Baker: 5217, 5370, 5595, 5794, 5811, 5842, 5869, 9049, 9063, 9065, 9066, 9067, 9069, 9070, 9071, 9073, 9075, 9076, 9077, 9091, 9093, 9096, 9097, 9098, 9263, 9822, 9830, V654
Mallinckrodt: 3004, 3006, 3016, 3017, 3018, 3024, 3041, 3701, 4295, 5160, 8814, H080, H488, H603, H985, V079, V571

2. Composition/Information on Ingredients

Ingredient	CAS No	Percent	Hazardous
Methyl Alcohol	67-56-1	100%	Yes

3. Hazards Identification

Emergency Overview

POISON! DANGER! VAPOR HARMFUL. MAY BE FATAL OR CAUSE BLINDNESS IF SWALLOWED. HARMFUL IF INHALED OR ABSORBED THROUGH SKIN. CANNOT BE MADE NONPOISONOUS. FLAMMABLE LIQUID AND VAPOR. CAUSES IRRITATION TO SKIN, EYES AND RESPIRATORY TRACT. AFFECTS CENTRAL NERVOUS SYSTEM AND LIVER.

SAF-T-DATA(tm) Ratings (Provided here for your convenience)

Health Rating: 3 - Severe (Poison)
Flammability Rating: 3 - Severe (Flammable)
Reactivity Rating: 1 - Slight
Contact Rating: 3 - Severe (Life)
Lab Protective Equip: GOGGLES & SHIELD; LAB COAT & APRON; VENT HOOD; PROPER GLOVES; CLASS B EXTINGUISHER
Storage Color Code: Red (Flammable)

Potential Health Effects

Inhalation:
A slight irritant to the mucous membranes. Toxic effects exerted upon nervous system, particularly the optic nerve. Once absorbed into the body, it is very slowly eliminated. Symptoms of overexposure may include headache, drowsiness, nausea, vomiting, blurred vision, blindness, coma, and death. A person may get better but then worse again up to 30 hours later.

Ingestion:
Toxic. Symptoms parallel inhalation. Can intoxicate and cause blindness. Usual fatal dose: 100-125 milliliters.

Skin Contact:
Methyl alcohol is a defatting agent and may cause skin to become dry and cracked. Skin absorption can occur; symptoms may parallel inhalation exposure.

Eye Contact:
Irritant. Continued exposure may cause eye lesions.

Chronic Exposure:
Marked impairment of vision has been reported. Repeated or prolonged exposure may cause skin irritation.

Aggravation of Pre-existing Conditions:
Persons with pre-existing skin disorders or eye problems or impaired liver or kidney function may be more susceptible to the effects of the substance.

First Aid Measures

Inhalation:
Remove to fresh air. If not breathing, give artificial respiration. If breathing is difficult, give oxygen. Get medical attention immediately.

Ingestion:
Induce vomiting immediately as directed by medical personnel. Never give anything by mouth to an

unconscious person. Get medical attention immediately.

Skin Contact:

Immediately flush skin with plenty of water for at least 15 minutes while removing contaminated clothing and shoes. Get medical attention. Wash clothing before reuse. Thoroughly clean shoes before reuse.

Eye Contact:

Immediately flush eyes with plenty of water for at least 15 minutes, lifting lower and upper eyelids occasionally. Get medical attention immediately.

5. Fire Fighting Measures

Fire:

Flash point: 12C (54F) CC

Autoignition temperature: 464C (867F)

Flammable limits in air % by volume:

lel: 6.0; uel: 36

Flammable Liquid and Vapor!

Explosion:

Above flash point, vapor-air mixtures are explosive within flammable limits noted above. Moderate explosion hazard and dangerous fire hazard when exposed to heat, sparks or flames. Sensitive to static discharge.

Fire Extinguishing Media:

Use alcohol foam, dry chemical or carbon dioxide. (Water may be ineffective.)

Special Information:

In the event of a fire, wear full protective clothing and NIOSH-approved self-contained breathing apparatus with full facepiece operated in the pressure demand or other positive pressure mode. Use water spray to blanket fire, cool fire exposed containers, and to flush non-ignited spills or vapors away from fire. Vapors can flow along surfaces to distant ignition source and flash back.

Accidental Release Measures

Ventilate area of leak or spill. Remove all sources of ignition. Wear appropriate personal protective equipment as specified in Section 8. Isolate hazard area. Keep unnecessary and unprotected personnel from entering. Contain and recover liquid when possible. Use non-sparking tools and equipment. Collect liquid in an appropriate container or absorb with an inert material (e. g., vermiculite, dry sand, earth), and place in a chemical waste container. Do not use combustible materials, such as saw dust. Do not flush to sewer! If a leak or spill has not ignited, use water spray to disperse the vapors, to protect personnel attempting to stop leak, and to flush spills away from exposures. US Regulations (CERCLA) require reporting spills and releases to soil, water and air in excess of reportable quantities. The toll free number for the US Coast Guard National Response Center is (800) 424-8802.

J. T. Baker SOLUSORB® solvent adsorbent is recommended for spills of this product.

Handling and Storage

Protect against physical damage. Store in a cool, dry well-ventilated location, away from any area where the fire hazard may be acute. Outside or detached storage is preferred. Separate from incompatibles. Containers should be bonded and grounded for transfers to avoid static sparks. Storage and use areas should be No Smoking areas. Use non-sparking type tools and equipment, including explosion proof ventilation. Containers of this material may be hazardous when empty since they retain product residues (vapors, liquid); observe all warnings and precautions listed for the product. Do Not attempt to clean empty containers since residue is difficult to remove. Do not pressurize, cut, weld, braze, solder, drill, grind or expose such containers to heat, sparks, flame, static electricity or other sources of ignition: they may explode and cause injury or death.

8. Exposure Controls/Personal Protection

Airborne Exposure Limits:
For Methyl Alcohol:
- OSHA Permissible Exposure Limit (PEL):
200 ppm (TWA)
- ACGIH Threshold Limit Value (TLV):
200 ppm (TWA), 250 ppm (STEL) skin

Ventilation System:
A system of local and/or general exhaust is recommended to keep employee exposures below the Airborne Exposure Limits. Local exhaust ventilation is generally preferred because it can control the emissions of the contaminant at its source, preventing dispersion of it into the general work area. Please refer to the ACGIH document, *Industrial Ventilation, A Manual of Recommended Practices*, most recent edition, for details. Use explosion-proof equipment.

Personal Respirators (NIOSH Approved):
If the exposure limit is exceeded and engineering controls are not feasible, wear a supplied air, full-facepiece respirator, airlined hood, or full-facepiece self-contained breathing apparatus. Breathing air quality must meet the requirements of the OSHA respiratory protection standard (29CFR1910.134). This substance has poor warning properties.

Skin Protection:
Rubber or neoprene gloves and additional protection including impervious boots, apron, or coveralls, as needed in areas of unusual exposure.

Eye Protection:
Use chemical safety goggles. Maintain eye wash fountain and quick-drench facilities in work area.

9. Physical and Chemical Properties

Appearance:
Clear, colorless liquid.

Odor:
Characteristic odor.

Solubility:
Miscible in water.

Specific Gravity:
0.8

pH:
No information found.

% Volatiles by volume @ 21C (70F):
100
Boiling Point:
64.5C (147F)
Melting Point:
-98C (-144F)
Vapor Density (Air=1):
1.1
Vapor Pressure (mm Hg):
97 @ 20C (68F)
Evaporation Rate (BuAc=1):
5.9

---

10. Stability and Reactivity

Stability:
Stable under ordinary conditions of use and storage.
Hazardous Decomposition Products:
May form carbon dioxide, carbon monoxide, and formaldehyde when heated to decomposition.
Hazardous Polymerization:
Will not occur.
Incompatibilities:
Strong oxidizing agents such as nitrates, perchlorates or sulfuric acid. Will attack some forms of plastics, rubber, and coatings. May react with metallic aluminum and generate hydrogen gas.
Conditions to Avoid:
Heat, flames, ignition sources and incompatibles.

---

11. Toxicological Information

Methyl Alcohol (Methanol) Oral rat LD50: 5628 mg/kg; inhalation rat LC50: 64000 ppm/4H; skin rabbit LD50: 15800 mg/kg; Irritation data-standard Draize test: skin, rabbit: 20mg/24 hr. Moderate; eye, rabbit: 100 mg/24 hr. Moderate. Investigated as a mutagen, reproductive effector.

--------\Cancer Lists\----------

Ingredient	---NTP Carcinogen--- Known	Anticipated	IARC Category
Methyl Alcohol (67-56-1)	No	No	None

---

12. Ecological Information

Environmental Fate:
When released into the soil, this material is expected to readily biodegrade. When released into the soil, this

material is expected to leach into groundwater. When released into the soil, this material is expected to quickly evaporate. When released into the water, this material is expected to have a half-life between 1 and 10 days. When released into water, this material is expected to readily biodegrade. When released into the air, this material is expected to exist in the aerosol phase with a short half-life. When released into the air, this material is expected to be readily degraded by reaction with photochemically produced hydroxyl radicals. When released into air, this material is expected to have a half-life between 10 and 30 days. When released into the air, this material is expected to be readily removed from the atmosphere by wet deposition.

Environmental Toxicity:

This material is expected to be slightly toxic to aquatic life.

13. Disposal Considerations

Whatever cannot be saved for recovery or recycling should be handled as hazardous waste and sent to a RCRA approved incinerator or disposed in a RCRA approved waste facility. Processing, use or contamination of this product may change the waste management options. State and local disposal regulations may differ from federal disposal regulations. Dispose of container and unused contents in accordance with federal, state and local requirements.

14. Transport Information

Domestic (Land, D.O.T.)

Proper Shipping Name: METHANOL
Hazard Class: 3
UN/NA: UN1230
Packing Group: II
Information reported for product/size: 358LB

International (Water, I.M.O.)

Proper Shipping Name: METHANOL
Hazard Class: 3, 6.1
UN/NA: UN1230
Packing Group: II
Information reported for product/size: 358LB

15. Regulatory Information

--------\Chemical Inventory Status - Part 1\--------

Ingredient	TSCA	EC	Japan	Australia
Methyl Alcohol (67-56-1)	Yes	Yes	Yes	

s

--------\Chemical Inventory Status - Part 2\----------

Ingredient	Korea	--Canada-- DSL	NDSL	Phil.
Methyl Alcohol (67-56-1)	Yes	Yes	No	Yes

--------\Federal, State & International Regulations - Part 1\----------

Ingredient	-SARA 302- RQ	TPQ	------SARA 313------ List	Chemical Catg.
Methyl Alcohol (67-56-1)	No	No	Yes	No

--------\Federal, State & International Regulations - Part 2\----------

Ingredient	CERCLA	-RCRA- 261.33	-TSCA- 8(d)
Methyl Alcohol (67-56-1)	5000	U154	No

Chemical Weapons Convention: No TSCA 12(b): No CDTA: No
SARA 311/312: Acute: Yes Chronic: Yes Fire: Yes Pressure: No
Reactivity: No (Pure / Liquid)

Australian Hazchem Code: 2PE
Poison Schedule: S6
WHMIS:
This MSDS has been prepared according to the hazard criteria of the Controlled Products Regulations (CPR) and the MSDS contains all of the information required by the CPR.

---

16. Other Information

NFPA Ratings: Health: **1** Flammability: **3** Reactivity: **0**
Label Hazard Warning:
POISON! DANGER! VAPOR HARMFUL. MAY BE FATAL OR CAUSE BLINDNESS IF SWALLOWED. HARMFUL IF INHALED OR ABSORBED THROUGH SKIN. CANNOT BE MADE NONPOISONOUS. FLAMMABLE LIQUID AND VAPOR. CAUSES IRRITATION TO SKIN, EYES AND RESPIRATORY TRACT. AFFECTS CENTRAL NERVOUS SYSTEM AND LIVER.
Label Precautions:
Avoid breathing vapor.
Avoid contact with eyes, skin and clothing.
Wash thoroughly after handling.
Keep container closed.
Use only with adequate ventilation.
Keep away from heat, sparks and flame.
Label First Aid:
If inhaled, remove to fresh air. If not breathing, give artificial respiration. If breathing is difficult, give oxygen. If swallowed, induce vomiting immediately as directed by medical personnel. Never give anything by mouth to

an unconscious person. In case of contact, immediately flush eyes or skin with plenty of water for at least 15 minutes while removing contaminated clothing and shoes. Wash clothing before reuse. In all cases get medical attention immediately.

Product Use:

Laboratory Reagent.

Revision Information:

No Changes.

Disclaimer:

****

Mallinckrodt Baker, Inc. provides the information contained herein in good faith but makes no representation as to its comprehensiveness or accuracy. This document is intended only as a guide to the appropriate precautionary handling of the material by a properly trained person using this product. Individuals receiving the information must exercise their independent judgment in determining its appropriateness for a particular purpose. MALLINCKRODT BAKER, INC. MAKES NO REPRESENTATIONS OR WARRANTIES, EITHER EXPRESS OR IMPLIED, INCLUDING WITHOUT LIMITATION ANY WARRANTIES OF MERCHANTABILITY, FITNESS FOR A PARTICULAR PURPOSE WITH RESPECT TO THE INFORMATION SET FORTH HEREIN OR THE PRODUCT TO WHICH THE INFORMATION REFERS. ACCORDINGLY, MALLINCKRODT BAKER, INC. WILL NOT BE RESPONSIBLE FOR DAMAGES RESULTING FROM USE OF OR RELIANCE UPON THIS INFORMATION.

****

Prepared by: Environmental Health & Safety
Phone Number: (314) 654-1600 (U.S.A.)

OxyChem®

Responsible Care® Good Chemistry at Work

MATERIAL SAFETY DATA SHEET

1. CHEMICAL PRODUCT AND COMPANY IDENTIFICATION

Occidental Chemical Corporation
5005 LBJ Freeway
P.O. Box 809050
Dallas, Texas 75380-9050

24 HOUR EMERGENCY TELEPHONE: **1-800-733-3665 or 1-972-404-3228 (U.S.);**
32.3.575.55.55 (Europe);
1800-033-111 (Australia)

TO REQUEST AN MSDS: **1-866-295-5278 or 1-615-399-5148**
CUSTOMER SERVICE: **1-800-752-5151 or 1-972-404-3800**

MSDS NUMBER: M35410

SUBSTANCE: CHLORINE, LIQUEFIED GAS

SYNONYMS:
Chlorine

PRODUCT USE: process chemical, water treatment chemical, plastic manufacture

REVISION DATE: Jun 10 2004

2. COMPOSITION, INFORMATION ON INGREDIENTS

COMPONENT: CHLORINE
CAS NUMBER: 7782-50-5
PERCENTAGE: 99.5-100

3. HAZARDS IDENTIFICATION

NFPA RATINGS (SCALE 0-4): HEALTH=3 FIRE=0 REACTIVITY=1

HMIS RATINGS (SCALE 0-4): HEALTH=3 FLAMMABILITY=0 REACTIVITY=1

EMERGENCY OVERVIEW:
COLOR: amber
PHYSICAL FORM: liquefied gas
ODOR: irritating odor, pungent odor
MAJOR HEALTH HAZARDS: MAY CAUSE BURNS TO THE RESPIRATORY TRACT, SKIN AND EYES. MAY CAUSE CHEMICAL PNEUMONIA. MAY CAUSE PERMANENT EYE DAMAGE. MAY BE LETHAL IN HIGH CONCENTRATIONS.
PHYSICAL HAZARDS: Strong oxidizer. Hazardous gas under pressure. May react explosively with organic materials.

POTENTIAL HEALTH EFFECTS:
INHALATION:
SHORT TERM EXPOSURE: irritation (possibly severe), chemical burns, pulmonary edema
LONG TERM EXPOSURE: to our knowledge, no effects are known
SKIN CONTACT:
SHORT TERM EXPOSURE: chemical burns, thermal burns
LONG TERM EXPOSURE: dermatitis
EYE CONTACT:
SHORT TERM EXPOSURE: chemical burns
LONG TERM EXPOSURE: visual disturbances
INGESTION:
SHORT TERM EXPOSURE: ingestion of harmful amounts is unlikely
LONG TERM EXPOSURE: ingestion of harmful amounts is unlikely

CARCINOGEN STATUS:
OSHA: No
NTP: No
IARC: No

4. FIRST AID MEASURES

INHALATION: If adverse effects occur, remove to uncontaminated area. Give artificial respiration if not breathing. If breathing is difficult, oxygen should be administered by qualified personnel. If respiration or pulse has stopped, have a trained person administer Basic Life Support (Cardio-Pulmonary Resuscitation/Automatic External Defibrillator) and CALL FOR EMERGENCY SERVICES IMMEDIATELY.

SKIN CONTACT: Immediately flush contaminated areas with water. Remove contaminated clothing, jewelry, and shoes immediately. Wash contaminated areas with soap and water. Thoroughly clean and dry contaminated clothing and shoes before reuse. GET MEDICAL ATTENTION IMMEDIATELY.

EYE CONTACT: Immediately flush eyes with a directed stream of water for at least 15 minutes, forcibly holding eyelids apart to ensure complete irrigation of all eye and lid tissues. Washing eyes within several seconds is essential to achieve maximum effectiveness. GET MEDICAL ATTENTION IMMEDIATELY.

INGESTION: Not a likely route of exposure.

NOTE TO PHYSICIAN: Steriod therapy, if given early, has been reported effective in preventing pulmonary edema.

5. FIRE FIGHTING MEASURES

FIRE AND EXPLOSION HAZARDS: Negligible fire hazard. Oxidizer. May ignite or explode on contact

with combustible materials. May react explosively with organic materials.

EXTINGUISHING MEDIA: Use extinguishing agents appropriate for surrounding fire.

FIRE FIGHTING: Keep unnecessary people away, isolate hazard area and deny entry. Move container from fire area if it can be done without risk. Cool non-leaking containers with water. Avoid inhalation of material or combustion by-products. Stay upwind and keep out of low areas. Wear NIOSH approved positive-pressure self-contained breathing apparatus.

SENSITIVITY TO MECHANICAL IMPACT: Not sensitive

SENSITIVITY TO STATIC DISCHARGE: Not sensitive

FLASH POINT: not flammable

6. ACCIDENTAL RELEASE MEASURES

OCCUPATIONAL RELEASE:
Remove sources of ignition. Stop leak if possible without personal risk. Consider evacuation of personnel located downwind if material is leaking. Do not apply water directly to the leak. Reacts with water to form corrosive, acidic solution (hydrochloric acid). Keep out of water supplies and sewers. Releases should be reported, if required, to appropriate agencies.

7. HANDLING AND STORAGE

STORAGE: Store and handle in accordance with all current regulations and standards. Keep container tightly closed. Store in a well-ventilated area. Keep away from heat, sparks and flame. Keep separated from incompatible substances. Protect from physical damage.

HANDLING: Avoid breathing vapor or mist. Do not get in eyes, on skin, or on clothing. Wash thoroughly after handling.

8. EXPOSURE CONTROLS, PERSONAL PROTECTION

EXPOSURE LIMITS:
CHLORINE:
1 ppm (3 mg/m3) OSHA ceiling
0.5 ppm (1.5 mg/m3) OSHA TWA (vacated by 58 FR 35338, June 30, 1993)
1 ppm (3 mg/m3) OSHA STEL (vacated by 58 FR 35338, June 30, 1993)
0.5 ppm ACGIH TWA
1 ppm ACGIH STEL
1 ppm (3 mg/m3) MEXICO TWA
3 ppm (9 mg/m3) MEXICO STEL

VENTILATION: Use closed systems when possible. Provide local exhaust ventilation where vapor may be generated. Ensure compliance with applicable exposure limits.

EYE PROTECTION: Wear chemical safety goggles with a faceshield to protect against skin contact when appropriate. Provide an emergency eye wash fountain and quick drench shower in the immediate work area.

CLOTHING: Wear appropriate chemical resistant clothing.

GLOVES: Wear chemical resistant, insulated gloves such as Perfect Fit NL-56(TM) or Best 6781R(TM).

PROTECTIVE MATERIAL TYPES: Perfect Fit NL-56(TM), Best 6781R(TM), Best Nitri Solve 727(TM), Tychem 10000 (TM)

RESPIRATOR: A NIOSH approved respirator with acid gas cartridge(s) may be permissible under certain circumstances where airborne concentrations are expected to exceed exposure limits or when symptoms have been observed that are indicative of overexposure.
A full facepiece air-purifying respirator may be used in concentrations up to 50X the acceptable exposure level. Supplied air should be used when the level is expected to be above 50X the acceptable level, or when there is a potential for uncontrolled release.
A respiratory protection program that meets 29 CFR 1910.134 must be followed whenever workplace conditions warrant use of a respirator.

9. PHYSICAL AND CHEMICAL PROPERTIES

PHYSICAL STATE: liquid
COLOR: amber
PHYSICAL FORM: liquefied gas
ODOR: irritating odor, pungent odor
MOLECULAR WEIGHT: 70.91
MOLECULAR FORMULA: Cl2
BOILING POINT: -29.27 F (-34.04 C)
FREEZING POINT: -150 F (-101 C)
VAPOR PRESSURE: 5830 mmHg @ 25 C
VAPOR DENSITY (air=1): 2.4
SPECIFIC GRAVITY (water=1): 1.4 @ 15.6 C
DENSITY: 11.7 lbs/gal @ 15.6 C
WATER SOLUBILITY: 0.7% @ 20 C
PH: Not applicable
VOLATILITY: 100%
ODOR THRESHOLD: 0.31 ppm approximate
EVAPORATION RATE: Not available
COEFFICIENT OF WATER/OIL DISTRIBUTION: Not available

10. STABILITY AND REACTIVITY

REACTIVITY: Stable at normal temperatures and pressure.

CONDITIONS TO AVOID: Avoid contact with water. Reacts with water to form corrosive, acidic solution (hydrochloric acid). May react explosively with organic materials.

INCOMPATIBILITIES: ammonia, combustible materials, metals, reducing agents, reacts in contact with aluminum to form hydrogen gas

HAZARDOUS DECOMPOSITION:
Thermal decomposition products: None known.

POLYMERIZATION: Will not polymerize.

11. TOXICOLOGICAL INFORMATION

CHLORINE, LIQUEFIED GAS:
TOXICITY DATA: Chlorine is a primary irritant on contact and may be corrosive to the eyes, skin, throat and mucous membranes. Exposure may result in severe or permanent eye injury. Overexposure may be fatal. Long term overexposure may produce upper airway changes leading to an increased prevalence of colds, shortness of breath and reactive airways dysfunction syndrome. The hazard at different concentrations is reported to be as follows: 0.2 - 0.5 ppm (No immediate toxic effects); 1-3 ppm (Definite odor with irritation of eye and nose); 5-8 ppm (Throat, eye and mucous membrane irritation); 30 ppm (Intense coughing fits); 34-51 ppm (Lethal in 1 to 1.5 hours exposure); 40-60 ppm(Exposure for 30-60 minutes may cause upper respiratory irritation, pulmonary edema, or bronchopneumonia); 100 ppm (May be lethal after 50 minutes exposure (estimated)); 430 ppm (Lowest concentration known to cause lethality after 30 minutes of exposure); 1000 ppm (May be fatal within a few deep breaths)

12. ECOLOGICAL INFORMATION

ECOTOXICITY DATA:
FISH TOXICITY: This material has exhibited moderate toxicity to aquatic organisms.

FATE AND TRANSPORT:
BIODEGRADATION: This material is an element and not subject to biodegradation.

PERSISTENCE: This material will exist in the disassociated state.

BIOCONCENTRATION: This material is believed not to bioaccumulate.

OTHER ECOLOGICAL INFORMATION: This material has exhibited toxicity to terrestrial organisms.

13. DISPOSAL CONSIDERATIONS

Use or process if possible. Chlorine may be absorbed into an alkaline solution such as caustic soda, soda ash or hydrated lime. Dispose in accordance with all applicable regulations.

14. TRANSPORT INFORMATION

U.S. DOT 49 CFR 172.101:
PROPER SHIPPING NAME: Chlorine
ID NUMBER: UN1017
HAZARD CLASS OR DIVISION: 2.3
LABELING REQUIREMENTS: 2.3; 8
ADDITIONAL SHIPPING DESCRIPTION: Toxic-Inhalation Hazard Zone B
MARINE POLLUTANT: CHLORINE
DOT HAZARDOUS SUBSTANCE(S):
Chlorine 10 lb(s) (4.54 kg(s))

CANADIAN TRANSPORTATION OF DANGEROUS GOODS:
SHIPPING NAME: Chlorine
UN NUMBER: UN1017
CLASS: 2.3; 8
OTHER INFORMATION: Emergency Response Assistance Plan (ERAP) may be required.

15. REGULATORY INFORMATION

U.S. REGULATIONS:

CERCLA SECTIONS 102a/103 HAZARDOUS SUBSTANCES (40 CFR 302.4):
CHLORINE: 10 LBS RQ

SARA TITLE III SECTION 302 EXTREMELY HAZARDOUS SUBSTANCES (40 CFR 355.30):
CHLORINE: 100 LBS TPQ

SARA TITLE III SARA SECTIONS 311/312 HAZARDOUS CATEGORIES (40 CFR 370.21):
ACUTE: Yes
CHRONIC: No
FIRE: Yes
REACTIVE: No
SUDDEN RELEASE: Yes

SARA TITLE III SECTION 313 (40 CFR 372.65):
This product contains a toxic chemical or chemicals subject to the reporting requirements of Section 313 of Title III of the Superfund Amendments and Reauthorization Act of 1986 and 40 CFR 372. Refer to Section 2.

CHLORINE

OSHA PROCESS SAFETY (29CFR1910.119):
CHLORINE: 1500 LBS TQ

STATE REGULATIONS:

California Proposition 65: This product may contain contaminants known to the State of California to cause cancer or reproductive toxicity as listed under Proposition 65 State Drinking Water and Toxic Enforcement Act. For additional information, contact Customer Service.

NEW JERSEY WORKER AND COMMUNITY RIGHT TO KNOW:
REPORTING REQUIREMENT:
CHLORINE 7782-50-5 99.5-100%

RIGHT TO KNOW HAZARDOUS SUBSTANCE LIST:
CHLORINE 7782-50-5 99.5-100%

SPECIAL HEALTH HAZARD SUBSTANCE LIST:
Not regulated.

PENNSYLVANIA RIGHT TO KNOW:
REPORTING REQUIREMENT:
CHLORINE 7782-50-5 99.5-100%

HAZARDOUS SUBSTANCE LIST:
CHLORINE 7782-50-5 99.5-100%

ENVIRONMENTAL HAZARDOUS SUBSTANCE LIST:
CHLORINE 7782-50-5 99.5-100%

SPECIAL HAZARDOUS SUBSTANCE LIST:
Not regulated.

CANADIAN REGULATIONS:

CONTROLLED PRODUCTS REGULATIONS (CPR): This product has been classified in accordance with the criteria of the Controlled Products Regulations (CPR) and the MSDS contains all of the information required by the CPR.

WHMIS CLASSIFICATION: A, C, D1A, E.

NATIONAL INVENTORY STATUS:

U.S. INVENTORY (TSCA): All the components of this substance are listed on or are exempt from the inventory.

TSCA 12(b) EXPORT NOTIFICATION: Not listed.

CANADA INVENTORY (DSL/NDSL): All components of this product are listed on the DSL.

16. OTHER INFORMATION

MSDS SUMMARY OF CHANGES

15. REGULATORY INFORMATION

IMPORTANT: The information presented herein, while not guaranteed, was prepared by competent technical personnel and is true and accurate to the best of our knowledge. NO WARRANTY OF MERCHANTABILITY OR OF FITNESS FOR A PARTICULAR PURPOSE, OR WARRANTY OR GUARANTY OF ANY OTHER KIND, EXPRESS OR IMPLIED, IS MADE REGARDING PERFORMANCE, SUITABILITY, STABILITY OR OTHERWISE. The information included herein is not intended to be all-inclusive as to the appropriate manner and/or conditions of use, handling and/or storage. Factors pertaining to certain conditions of storage, handling, or use of this product may involve other or additional safety or performance considerations. While our technical personnel will be happy to respond to questions regarding safe handling and use procedures, safe handling and use remains the responsibility of the customer. No suggestions for use are intended to, and nothing herein shall be construed as a recommendation to, infringe any existing patents or violate any laws, rules, regulations or ordinances of any governmental entity.

6

TABLE OF CONTENTS SECTION 6

FLAGSTAFF MEADOWS SITE 2 WWTP

WASTEWATER TREATMENT PLANT DESIGN REPORT AND SUBMITTAL

1. Fema Map
2. Site Map

Coconino County, AZ - Interactive GIS

Parcel and Prop. Info | Contact

Analysis Tools

- Parcel Locator
- Property Data Search
- Delinquent Parcel Mapper
- Flood Zone Locator

Refresh Map

Auto Refresh

LAYERS

visible active

- Roads
- Contours
- Flood Plain
- Road Districts
- Parcels
- Township-Section
- County Zoning
- Rail Lines
- Schools, Sch. Districts
- Congressional Districts
- Legislative Districts
- Supervisor Districts
- Polling Places

Zoom To Scale

1:

Current Scale - 1:2500

View Full Extent

Disclaimer

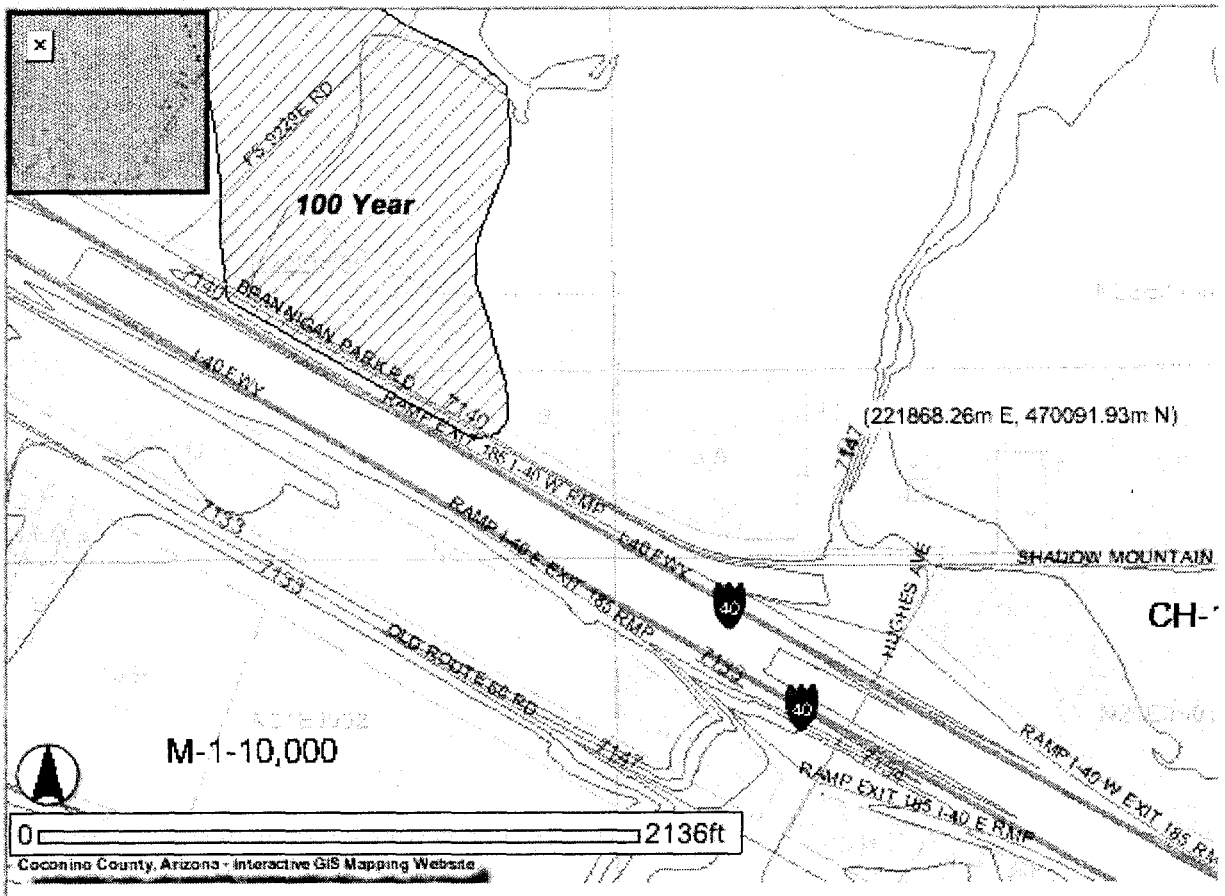

Coordinates: E, N *(meters)* State Plane

Locate Coordinate

Note: This tool is for general area location only. Functions accuracy limited by programming restraints.

State Plane: Transverse Mercator, Arizona Central Zone, NAD83, Units Meters

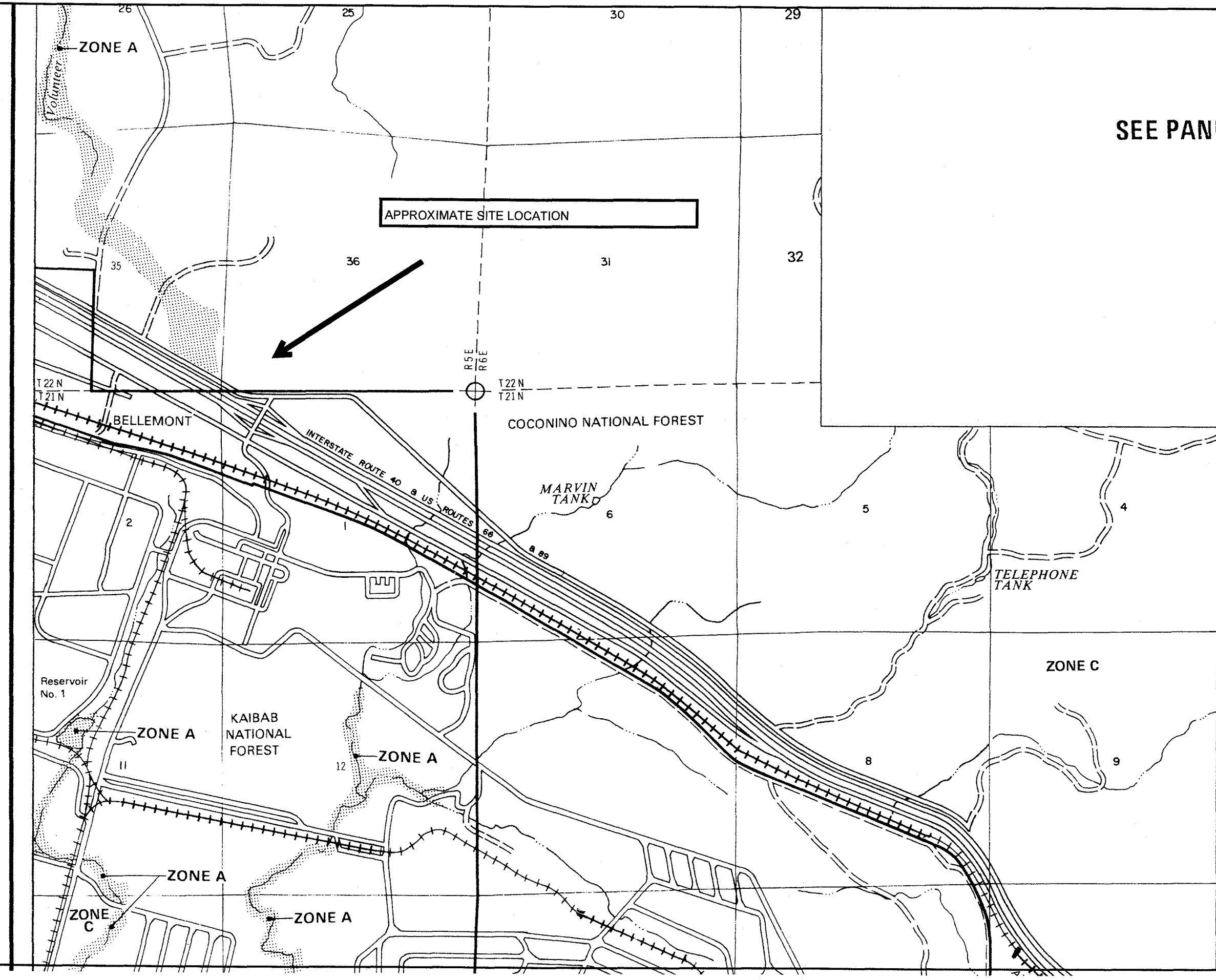

APPROXIMATE SCALE

2000 0 2000 FEET

NATIONAL FLOOD INSURANCE PROGRAM

FIRM

FLOOD INSURANCE RATE MAP

COCONINO COUNTY, ARIZONA

(UNINCORPORATED AREAS)

PANEL 3575 OF 4525

(SEE MAP INDEX FOR PANELS NOT PRINTED)

COMMUNITY-PANEL NUMBER
040019 3575 B

EFFECTIVE DATE:
NOVEMBER 16, 1983

Federal Emergency Management Agency

This is an official copy of a portion of the above referenced flood map. It was extracted using F-MIT On-Line. This map does not reflect changes or amendments which may have been made subsequent to the date on the title block. For the latest product information about National Flood Insurance Program flood maps check the FEMA Flood Map Store at www.msc.fema.gov

HydroSystems Inc.
1220 S. Park Lane, Suite 5 Tempe, AZ 85281
Telephone: 480-517-9050 Fax: 480-517-9049

Principals
Gary G. Small
Roxanne Small

Business Manager
Peggy Olsen

Team HSI
Kathy Dunham
Sheila Ehlers
Katherine Geiger
Tomas Goode
Nancy La Mascus
Miles McGinnis
Marla Mikaelian
Phil Paski
Steve Skotnicki
Blake Small
Chris Weyrauch

December 23, 2005

Mr. Doug Dunham
Manager
Office of Assured and Adequate Water Supply
Arizona Department of Water Resources
3550 North Central Avenue
Phoenix, Arizona 85012

Subject: Physical Availability Demonstration for Utility Source, LLC

Dear Doug:

HydroSystems Inc. (HSI) has been contracted by Utility Source, LLC who is applying to the Arizona Department of Water Resources (ADWR) to expand the demonstration of the physical availability of groundwater for their service area in the community of Bellemont, Arizona. This Physical Availability Demonstration (PAD) expands upon a previous PAD that was submitted in July and approved in October of 2004. The expansion is based upon locating, drilling, and testing of a new deep well (Deep Well 4) this year to serve the new development. This PAD demonstrates that groundwater supplies from the regional aquifer are physically available to serve the existing, committed, and projected demand of the subject properties. This PAD will be used to support an application for water adequacy and the Arizona Corporation Commission's (ACC) decision to issue an extension of the Certificate of Convenience and Necessity (CCN) for Utility Source, LLC. Utility Source, LLC is the water provider for Flagstaff Meadows and other proposed properties described herein and owns the necessary land, wells, and improvements to serve the new development. It is expected that the CCN extension will be conditional upon ADWR's determination that a 100-year adequate water supply exists for the new service area. An application for a water adequacy report will be submitted to ADWR once a PAD is issued from the ADWR.

Recent drilling, aquifer testing, and water chemistry results from Deep Well 4 have provided valuable information regarding groundwater development for the future water demands in the area. Based upon information collected from aquifer step testing and a seven day continuous rate aquifer test at 371 gallons per minute, groundwater production from Deep Well 4 is estimated at 600 acre-feet per year. Utility Source is respectfully requesting that ADWR review the supporting documentation contained in this PAD in support of an annual available groundwater resource of 771 acre-feet which includes all the wells owned by Utility Source, LLC.

We appreciate the Department's expedited review of this application, so that our process to obtain a Certificate of Convenience and Necessity (CCN) can proceed with the Arizona Corporation Commission. Please contact Sheila Ehlers or Phil Paski with any questions you have regarding our application at 480-517-9050.

Sincerely,

Phillip M. Paski, R.G., CGWP
Senior Hydrogeologist

Physical Availability Demonstration

For

Utility Source, LLC
Coconino County, Arizona

Prepared for:

Utility Source, LLC

721 East San Pedro
Gilbert, Arizona 85234

Prepared by:

HydroSystems, Inc.

1220 S. Park Lane, Suite 5
Tempe, Arizona 85281
P: 480.517.9050 F: 480.517.9049
e-mail: info@hydrosystems-inc.com
website: www.hydrosystems-inc.com

December, 2005

12/22/05

EXECUTIVE SUMMARY

Utility Source, LLC is applying to the Arizona Department of Water Resources (ADWR) for an expanded Physical Availability Demonstration (PAD) to prove that groundwater resources are available to serve the proposed extension of its Certificate of Convenience and Necessity (CCN). In 2004, ADWR approved a PAD of approximately 110 acre-feet per year. The CCN extension currently under review by the Arizona Corporation Commission is based on the successful outcome of the recent drilling and testing of a fourth deep well near the current CCN for Utility Source, LLC. The proposed demand to serve the new development identified in the CCN extension is 446 acre-feet per year. This demand is expected to increase based on the requests for water supplies from potential users.

This well, known as Deep Well 4, is located east of the current service area and was located using a surface geophysical survey method called controlled source audio-frequency magnetotellurics (CSAMT) to determine the subsurface geologic structure beneath the property. This same method was used to locate Deep Well 3 that serves Utility Source, LLC. This geophysical survey method has been an extremely useful tool to locate areas of high resistivity values deep beneath the land surface, such as faults and fractures, which may not be seen on the ground surface. Furthermore, since faults usually dip at an angle to the ground surface, this methodology allows the wells to be sited to intersect the fault beneath the water bearing zone.

The Utility Source CCN is located in an area where surface expressions of fault structures have been mapped by the United States Geologic Survey (USGS). Using these maps, nine separate survey lines were positioned to help locate the subsurface location of an unnamed fault on 20-acres of land, now owned by Greenfield Land Development. These nine lines are in addition to eight lines that were used to locate Deep Well 3, previously. Together, these seventeen lines provided the basis for a three dimensional view into the study area below the Utility Source service area.

Once the survey was complete and the data analyzed, the location for Deep Well 4 was determined along the unnamed fault. This fault, trending in a northwest direction, intersects the Bellemont Fault, where Deep Well 3 is drilled. The intersection of these two faults, north of Deep Well 3, provides a large groundwater collection zone for Deep Well 4 within the regional aquifer. Deep Well 4 was drilled successfully to a depth of 2,908 feet below the land surface and

was pumped continuously at 371 gallons per minute (or approximately 600 acre-feet per year) for seven days as part of the testing. This is in vast contrast to Deep Well 1 and Deep Well 2 also located in the regional aquifer but outside of a fault zone. These wells only produce approximately 11 and 23 gallons per minute, respectively.

Using data from the aquifer testing and other published information, a simple groundwater flow model was utilized to estimate the drawdown impacts of withdrawing groundwater from Deep Wells 1-4 for 100-years. Approximately 480 gallons per minute (or 771 acre-feet per year) was simulated for the 100-year timeframe. The resulting drawdown within the Utility Source, LLC CCN was conservatively estimated at 297 feet.

This estimated projected impact is more conservative (greater than) than the actual impacts seen from approximately 50 years of data from four of the Flagstaff Woody Mountain wells from within the same regional aquifer. These wells have experienced local water level declines within the regional aquifer ranging from 18 to 65 feet (0.36 to 1.38 feet per year) over a 50 year period. Their pumping rates ranged from 250 to 575 gallons per minute totaling 1,626 acre-feet for the year 2004. The estimated annual groundwater production of 771 acre-feet for the proposed extension of the CCN is approximately 46 percent of the four Woody Mountain well production rates for the year 2004. In consideration of the actual decline rate of a major city well field with 50 years of record near the Utility Source Service Area, the impact calculated by the theoretical model should be viewed as a very conservative estimate.

The Arizona Administrative Code, R12-15-717, specifies that in order to approve the Physical Availability determination at depths greater than 1200 feet below land surface, a waiver may be obtained if the groundwater is available at the lower depths and the applicant demonstrates the financial capability to obtain the groundwater. For this PAD, the static water level of Deep Well 4 is 1,675 feet below land surface and requires a waiver of the depth to water criteria. This hydrologic report demonstrates that groundwater is available at these lower depths to meet the 100-year demand. Furthermore, Utility Source, LLC meets the financial capability criteria by already funding and drilling the deep wells they propose to use.

Table of Contents

Executive Summary

Section No.		Page No.
1.0	**Introduction**	1
1.1	Goal of the PAD	2
1.2	Communication and Site Visitation	2
2.0	**Elements of Demand**	4
3.0	**Elements of Supply**	6
3.1	Shallow Wells	6
3.2	Deep Wells	6
3.3	Effluent	7
4.0	**Previous Investigations**	8
4.1	Well Site Evaluation and Geophysical Survey	8
4.2	PAD Analysis Deep Well 3	9
5.0	**Geology**	12
5.1	Physiographic Setting	12
5.2	Regional Geology	13
5.3	Local Geology	13
5.4	Structural Interpretation	14
6.0	**Hydrogeology**	16
6.1	Wild Bill Hill Aquifer	16
6.2	Regional Coconino Aquifer	17
7.0	**Surface Geophysical Survey**	22
7.1	Method Overview	22
7.2	Survey Parameters	23
7.3	Field Instrumentation	24
7.4	Inversion Models	24
7.5	Data Quality	25
7.6	Survey Results	26
7.7	Conclusions	29
8.0	**Drilling and Well Construction Deep Well 4**	30
8.1	Borehole Drilling	30
8.2	Sample Collection and Logging	32
8.3	Slotted Casing Installation and Well Completion	34
8.4	Well Development	34

Table of Contents

Section No.		Page No.
9.0	**Aquifer Testing**	37
9.1	Testing Equipment	37
9.2	Aquifer Testing	41
9.3	Data Analysis	43
9.4	Deep Well 3 and Deep Well 4 Comparison	46
9.5	Woody Mountain Well Field	47
9.6	Water Chemistry	49
10.0	**Drawdown Analysis**	51
10.1	Model Description	51
10.2	Aquifer Parameters	51
10.3	Theoretical Drawdown Impact Analysis	53
10.4	Actual Versus Theoretical Impact Analysis	53
11.0	**Conclusions**	54
12.0	**References**	55

List of Figures

Figure No.	
1	Local Study Area
2	Proposed CCN Expansion
3	Regional Study Area
4	CSAMT Line Locations for Deep Well 3
5	Deep Well 3 Line 1 CSAMT Survey
6	Generalized Stratigraphic Section of Rock Units, Flagstaff, Arizona
7	Fault Locations in the Bellemont Area
8	Regional Aquifer Well Locations
9	Enlarged CSAMT Line Locations for Deep Well 4
10	Deep Well 4 Line 1 CSAMT Survey
11	Line 2 CSAMT Survey
12	Line 3 CSAMT Survey
13	Line 4 CSAMT Survey
14	Line 5 CSAMT Survey
15	Line 6 and Line 7 CSAMT Survey
16	Line 8 (Lot 31) CSAMT Survey
17	Line 9 CSAMT Survey
18	Fault Locations and All CSAMT Survey Lines
19	Deep Well 4 Conceptual Well Design
20	Lithologic and Geophysical Logs Deep Well 4

Table of Contents

21 Grand Canyon Sedimentary Units
22 Meteoric Water Line Plot of Stable Isotopes near Flagstaff Meadows Study Area
23 Groundwater Flow Model Grid and Boundary Conditions
24 Model Hydraulic Conductivity Values
25 Steady State Water Level Elevation
26 100 Year Impact Analysis Results

List of Tables

Table No.

1 Utility Source 100-Year Projected Supply and Demands
2 Flagstaff Meadows Units I and II Actual Meter Readings
3 Flagstaff Meadows Townhomes Actual Water Use
4 Well Summary
5 Well Development Summary Deep Well 4
6 Summary of Drinking Water New Source Results for Deep Wells 3 and 4

List of Photos

Photo No.

1 Aluminum foil, salt, and water in hand excavated transmitter dipole site
2 Appearance of "ready for use" transmitter dipole site
3 GDP-32II receiver and ceramic pot used for GLD CSAMT survey
4 Transmitter truck and portable generator
5 Drilling and placement of 16-inch steel casing
6 12-inch under reamer hammer bit with wing extended
7 Unexpected groundwater discharge from well when making a pipe connection
8 Groundwater discharge to cyclone
9 Additional air system supplied by the Weatherford Company
10 Tricone bit missing one cone in deep fracture at 2,908 feet
11 Samples collected in 5-foot intervals and placed in cloth bags
12 8-inch slotted casing
13 6-inch slotted casing
14 Air lift development from 2,100 feet, flow is estimated over 200 gpm
15 Rossum centrifugal sand sampler, graduated in milliliters
16 Setting Centrilift 400 horsepower pump in Deep Well 4
17 Centrilift variable frequency drive (VFD)
18 In-line propeller flow meter showing dial in gpm, and totalizer in gallons
19 Discharge pipe with 4-inch orifice plate and manometer
20 Transducers set in Deep Well 4 sounding tubes

Table of Contents

List of Graphs

Graph No.	
1	Pumping Rate Comparison at Deep Well 4
2	Specific Capacity Comparison Deep Well 4
3	Step 1 Drawdown and Recovery Deep Well 4
4	Step 2 Drawdown and Recovery Deep Well 4
5	Step 3 Drawdown and Recovery Deep Well 4
6	Constant Rate Aquifer Test Drawdown and Recovery Deep Well 4
7	Constant Rate Aquifer Test - Drawdown
8	Constant Rate Aquifer Test - Recovery
9	Water Level Hydrograph for Deep Well 3

List of Appendices

Appendix No.	
A	Ownership Details
B	Water Use Billing Records For Flagstaff Meadows Units I and II
C	Year 2000 Data from the U.S. Census Bureau for Coconino County
D	Bellemont Well Logs
E	GWSI and 55-Files
F	Lithologic Log Deep Well 4
G	Well Development
H	Step Test and Constant Rate Test Field Notes and Measurements
I	City of Flagstaff Water Level History
J	ADWR and USGS Water Quality Data
K	Digital Model Files

1.0 INTRODUCTION

Utility Source, LLC is applying to the Arizona Department of Water Resources (ADWR) to expand the demonstration of the physical availability of groundwater for the Utility Source, LLC service area (USSA), in the community of Bellemont, located near Flagstaff, Arizona. This Physical Availability Demonstration (PAD) expands upon a previous PAD that was submitted in July and approved in October of 2004. The expansion is based upon locating, drilling, and testing of a new deep well (Deep Well 4) this year to serve the new development. This PAD demonstrates that groundwater supplies from the regional aquifer are physically available to serve the existing, committed, and projected demand of the subject properties. This PAD will be used to support an application for water adequacy and the Arizona Corporation Commission's (ACC) decision to issue an extension of the Certificate of Convenience and Necessity (CCN) for Utility Source, LLC. Utility Source, LLC is the water provider for Flagstaff Meadows and other proposed properties described herein and owns the necessary land, wells, and improvements to serve the new development. It is expected that the CCN extension will be conditional upon ADWR's determination that a 100-year adequate water supply exists for the new service area. An application for a water adequacy report will be submitted to ADWR once a PAD is issued from the ADWR.

Greenfield Land Development (GLD) is the developer/original property owner for the Flagstaff Meadows subdivision. The ownership of Flagstaff Meadows and Utility Source, LLC is explained in a previously submitted letter dated December 9, 2004 which is and included as *Appendix A*.

ADWR has previously approved the water adequacy for Flagstaff Meadows Units I and II and Flagstaff Meadows Townhomes Unit I. This PAD is expanded to include land and uses within the proposed CCN expansion for USSA, as described in *Section 2.0* The USSA (and proposed expansion) is located in Coconino County approximately 10 miles west of Flagstaff in the portions of Section 35 and 36, Township 22 North, Range 5 East; portions of Section 1, Township 21 North, Range 5 East; and portions of Section 6, Township 21 North, Range 6 East as shown in *Figure 1*. The Flagstaff Meadows subdivision is shown in addition to the proposed service area for extension of the CCN. *Figure 2* shows the current land ownership within the proposed CCN expansion. *Figure 3* is the Regional study area referenced later in the PAD. It

should be noted that due to the size of the regional study area, a different map scale needed to be used. The regional study area includes Townships 21 and 22 North, Ranges 5 and 6 East.

Groundwater from the regional aquifer is the proposed source of groundwater for the USSA. Recently completed Deep Well 4 (55-206887, A(21-6)01cba), drilled to a depth of 2,908 feet with groundwater measured at 1,675 feet below land surface, provides new data to support this PAD. Pursuant to Arizona Administrative Code R12-15-717B.1.e., a waiver of the Department's depth-to-static water level criteria is being sought for the physical availability to serve the subject properties, since the static water level currently exceeds the 1,200-foot depth to water criteria. Groundwater will be used for new residential development within the USSA. Deep Well 4 is owned by Utility Source, LLC and will serve the USSA and expanded CCN area when issued by the ACC. Available water quality data indicates that groundwater in the regional aquifer meets all drinking water standards.

1.1 Goal of the PAD

Recent drilling, aquifer testing, and water chemistry results from Deep Well 4 have provided valuable information regarding groundwater development for the future water demands in the area. Based upon information collected from aquifer step testing and a seven day continuous rate aquifer test at 371 gallons per minute, groundwater production from Deep Well 4 is estimated at 600 acre-feet per year. Utility Source is respectfully requesting that ADWR review the supporting documentation contained in this PAD in support of an annual available groundwater resource of 771 acre-feet which includes all the wells owned by Utility Source, LLC.

1.2 Communication and Site Visitation

Beginning with submittal of the Notice of Intent form to drill Deep Well 4, HSI has continued to communicate with the ADWR Office of Assured and Adequate Water Supply Division relative to drilling and aquifer testing. Mr. Alan Dulaney (ADWR) conducted a site visit during drilling operations in May 2005. The following visitors who came to observe activities associated with Deep Well 4 included individuals residing in northern Arizona who are familiar with the challenges inherent in drilling and aquifer testing of wells accessing groundwater from the regional aquifer. The U.S. Geological Survey (USGS) Flagstaff office has conducted surface geophysical surveys, aquifer testing, water chemistry sampling, data analysis,

and performed many hydrogeologic investigations pertaining to the regional aquifer. Throughout the Deep Well 4 project, contact has been maintained with the USGS through Mr. Don Bills who is a noted expert of the hydrogeologic conditions found in northern Arizona. Mr. Bills came to observe drilling and aquifer testing of Deep Well 4. A complete set of the drill cutting samples have been supplied to the USGS. All data collected from the surface geophysical survey, drilling notes, aquifer testing and water chemistry results will be provided to the USGS to be included with their regional database. Mr. Randy Pellatz, P.E. who is Assistant Utilities Director for the City of Flagstaff came to the site several times to observe drilling, well development, and aquifer testing. Mr. Pellatz provided valuable information relative to well construction options and pump selection for aquifer testing in addition to sampling groundwater from Deep Well 4 for preliminary water chemistry screening. Mr. Bill Linville who is the General Manager of Doney Park Water came to the site to observe drilling operations. Mr. Mike Plouge, P.G. who is a Water Resources Hydrologist for the Town of Payson Water Department visited the site to observe well development activities.

2.0 ELEMENTS OF DEMAND

The 100-year demand projection for the USSA water supply is presented in *Table 1*. This table includes the current and committed demand for the first phase of Flagstaff Meadows (325 lots), the committed demand for the second phase of Flagstaff Meadows (350 lots), and proposed phase three demands for properties currently owned by Empire Properties, Win-Peters, Inc., Northwinds Commerce Park, LLC.; Flagstaff Meadows R.V. Park, LLC., and Greenfield Land Development Profit Sharing Plan. The first phase of Flagstaff Meadows, as it is referenced here, includes Flagstaff Meadows Units I and II and Flagstaff Meadows Townhomes Unit I. The second phase includes Flagstaff Meadows Unit III and Flagstaff Meadows Townhomes Unit II. The third phase includes Empire Properties, Win-Peters, Inc., Northwinds Commerce Park, LLC.; Flagstaff Meadows R.V. Park, LLC., and Greenfield Land Development Profit Sharing Plan developments. The projected water demand of 446 acre-feet per year, includes both residential and non-residential water use for the USSA for 100-years. The demand projection includes an increase in the residential use for Flagstaff Meadows Units I and II based on actual water billing records. As described more fully in *Section 3.0*, the supplies to meet this demand include groundwater from the regional aquifer and treated effluent generated from the development.

The development includes non-residential demands that are currently being served with groundwater from the shallow aquifer (not included in this PAD) and treated effluent. Specifically, the truck stop and hotel have been served solely from the shallow wells to date and that is likely to continue. However, the demands for groundwater from the regional aquifer include the truck stop and hotel for planning purposes since ADWR will not recognize the shallow aquifer as a long-term water supply. *Appendix B* includes the water use data for the truck stop and hotel. Utility Source, LLC is dedicating the future use of the shallow wells to the non-residential demand. Treated effluent is used for other non-residential demand such as the lakes and parks.

The treated effluent is stored in two lined on-site lakes, totaling 1.75 surface acres. Currently the average number of gallons of treated effluent is approximately 43,000 gallons per day (gpd). Utility Source, LLC holds a 150,000 gpd Aquifer Protection Permit (APP) (#104083) for the treatment facility. A National Pollutant Discharge Elimination System

(NPDES) permit has been obtained in the event that additional effluent is available in excess of the demand and capacity of the storage ponds. This allows effluent to be discharged to a nearby wash, if necessary. The NPDES permit will be renewed as necessary.

The projected water use demand for Flagstaff Meadows Units I, II, and III was based upon the actual billing records for Flagstaff Meadows Units I and II from the last year, and as requested by ADWR, modified to reflect the highest reported monthly demand, or 255 gallons per housing unit per day GPHUD (MParry, 2005). These data are attached as *Appendix B* and summarized in *Table 2*. The remaining single family demand for Empire Properties, Win-Peters, and Greenfield Land Development Profit Sharing Plan was projected for consistency at 255 GPHUD.

The demands for the mobile homes and R.V. Park were based on recommendations from ADWR (Dulaney, 2005, telephone communication). The mobile home park was estimated to have the same demand as a single family residence, and the R.V. park demand is calculated as a commercial property, or 2.25 acre-feet per acre per year.

Population densities from the U.S. Census may be extrapolated for the USSA. Year 2000 Data from the U.S. Census Bureau for Coconino County indicated a total population of 116,320 (*Appendix C*). The data identified 53,443 housing units and 40,448 occupied housing units for Coconino County. This equates to 2.18 persons per housing unit or 2.88 persons per occupied housing units. The demands for Flagstaff Meadows Townhomes Units I and II were estimated using a standard interior demand of 57 gallons per capita per day (GPCD) multiplied by 2.88 persons per housing unit (PPHU), resulting in 164 GPCD/PPHU. The actual highest average monthly use demand for Flagstaff Meadows Townhomes, averaged 149 gallons per housing unit per day in January 2005, as shown in *Table 3*. Therefore, the demand for this PAD is much more conservative.

3.0 ELEMENTS OF SUPPLY

Available water resources for the USSA include shallow wells, deep wells, and treated effluent. Water needs for the development will be met predominantly from groundwater. This section of the USSA PAD provides an overview of the three listed resources. Because of additional drilling, testing, and sampling activities that have been conducted within the proposed USSA, more detailed information regarding water resource components as related to the geology and hydrogeology are detailed in subsequent sections of this PAD.

3.1 Shallow Wells

Groundwater pumped from the shallow aquifer has served the water demands in this area for as long as 40 years. The shallow aquifer has been referenced as the Wild Bill Hill aquifer. Utility Source, LLC pumps groundwater from five shallow wells to serve residential and non-residential uses in the area. Information pertaining to the five shallow wells is summarized on *Table 4*. Groundwater from the shallow aquifer is not included in the PAD analysis. It should be recognized, however, the shallow aquifer could be utilized as a backup resource, or serve additional non-residential needs.

3.2 Deep Wells

Groundwater for USSA is available from the regional aquifer from four deep wells, referenced in this PAD as Deep Well 1, Deep Well 2, Deep Well 3, and Deep Well 4. Details for each well are summarized on *Table 4*. Groundwater produced from the Deep Well 4 will be used in all subsequent water demand and supply estimates. Data collected from recent drilling and testing of Deep Well 4 is included in this report and supports the 100-year physical availability of groundwater for the development. Reference to drilling and aquifer testing data for the other Utility Source, LLC deep wells is included in this PAD as a comparison to support the physical availability of groundwater supplies for the USSA.

3.3 Effluent

Treated effluent from the Flagstaff Meadows Wastewater Treatment Plant (WWTP) is used to serve the non-residential demands of the development, including the lakes and park areas. The current volume of effluent permitted under the APP is 150,000 gallons per day (gpd). The current volume of treated effluent produced at the WWTP averages 43,000 gpd.

4.0 PREVIOUS INVESTIGATIONS

Before presenting new information gained from recent production well drilling, aquifer testing, and sampling, it will be helpful to understand some of the activities that have already taken place relative to developing groundwater resources for the Flagstaff Meadows development. In the following paragraphs, reference is made to two documents submitted to ADWR in July 2004 as part of the Flagstaff Meadows PAD. *Sections 4.1 and 4.2* summarize important components of the previous work. Reference to this work is intended to provide the background and basis for continued groundwater resource investigations within the USSA. The result of these activities for the Flagstaff Meadows PAD has significantly increased the knowledge and understanding of the regional aquifer in this part of northern Arizona.

4.1 Well Site Evaluation and Geophysical Survey

Prior to January 2003, only limited development occurred on the property owned by GLD in Bellemont, Arizona. Three small diameter shallow wells met the water needs of predominantly commercial activities with no apparent indication of reduced water production from the shallow Wild Bill Hill aquifer. In April and September 2003, GLD hired a local contractor to drill and equip two deep wells accessing groundwater from the deeper regional aquifer in the vicinity of the Bellemont fault. Completion of the two deep wells (Deep Well 1 and Deep Well 2), however, did not meet the expected water needs of the development due to their low groundwater yield. Although surface fracture trace methods were used to locate the two deep wells within the USSA, apparently the wells did not gain access to the fracture system at depth. For this reason, GLD contracted HydroSystems, Inc (HSI) and Zonge Engineering & Research Organization (Zonge) to perform a surface geophysical survey and well site evaluation.

The surface geophysical survey and well site evaluation included using the controlled source audio-frequency magnetotelluric (CSAMT) geophysical survey method to determine the subsurface geologic structure beneath the Bellemont property. Available surface geologic mapping indicated that a structure identified as the Bellemont fault is concealed at the surface, but extends in a northeasterly direction under the GLD property (Thorestenson and Beard, 1997; Wilkinson, 2000). It has been reported that a well drilled for Camp Navajo has produced groundwater from the Bellemont fault in excess of 125 gallons per minute (gpm).

CSAMT data acquisition within the USSA occurred as two separate field mobilization activities. The first survey conducted in January 2004 consisted of five lines (Lines 1, 2, 3, 4, and 5) of data covering approximately 4,200 line-feet with a station spacing of 100 feet. In March 2004, the second CSAMT survey consisted of three lines (Lines 6, 7, and 8) which provided an additional 2,100 line-feet of data. The locations of the lines for the survey are shown on *Figure 4*.

Results from the CSAMT survey indicated the presence of the Bellemont fault on Lines 1, 3, 6, 7, and 8. The estimated position of the fault is shown on *Figure 4* where it intersects data stations on the listed survey lines. The fault trends in a northeasterly direction, in agreement with studies conducted in the area by other researchers. Based upon the individual cross-sections developed for each survey line, HSI and Zonge recommended drilling Deep Well 3 in close proximity to Line 1 station 350. The CSAMT cross-section for Line 1 is shown on *Figure 5*. When comparing the data with the two deep wells already drilled on the Bellemont property, it appears that both Deep Well 1 and Deep Well 2 encountered higher resistive material at depth with commensurate low groundwater production capabilities. *Figure 5* shows the position relative to Deep Well 2 and Deep Well 3. Deep Well 2 apparently does not intersect the Bellemont fault and penetrates higher resistive material than Deep Well 3. The low resistivity values, with rapid changes in resistivity, at depth, indicate a structural feature interpreted as the Bellemont fault. It is postulated that the penetrated sedimentary units in the fault allow increased secondary permeability with a noticeable increase in water production capabilities. Deep Well 2 produces 23 gpm and Deep Well 3 produces 72 gpm.

Completion of the geophysical survey and well site selection evaluation led to drilling of Deep Well 3. Once completed, HSI prepared the necessary documentation to submit the Flagstaff Meadows PAD to ADWR on behalf of GLD.

4.2 PAD Analysis Deep Well 3

Since submittal of the Flagstaff Meadows PAD in July 2004, many meetings resulting in requests for additional information and revision of water supply and demand estimates have taken place. Perhaps the most opportune way of summarizing the events and decisions that have been made is to reference select paragraphs from a letter prepared by ADWR relative findings of their review of the Flagstaff Meadows PAD. These excerpts can be found in their entirety in the

letter prepared by ADWR to Mr. Lonnie McCleve, entitled: *Flagstaff Meadows, Coconino County, Arizona Application for a Physical Availability Demonstration (ADWR #20-401341), October 19, 2004.*

> "The Department has completed its review of your application for a Physical Availability Demonstration (ADWR No. 20-401341), as well as additional available hydrologic information on file with the Department. The study area consists of approximately 150 acres in Section 1, Township 21 North, Range 5 East, and Section 36, Township 22 North, Range 5 East, Gila and Salt River base line and meridian, in Coconino County within the Verde Valley sub-basin of the Verde River Groundwater Basin in north-central Arizona."
>
> "In accordance with A.A.C. R12-15-716(C), the Department determined that approximately 110 acre-feet per year of groundwater are physically available for 100-years, pursuant to A.A.C. R12-15-717(B). Although the water level at this location currently exceeds the standard depth-to-water limit of 1200 feet below ground surface (BGS), pursuant to A.A.C. R12-15-717(B)(1)(e), the Department may allow a lower depth-to-water level if groundwater is available at a lower depth *and* the applicant has demonstrated the financial capability to access the groundwater at the lower depth. With the completion of the deep wells, the Department has determined that the applicant has demonstrated the financial capability to access sufficient groundwater supplies from within the regional aquifer system at a depth greater than 1200 feet BGS. As such, the Department has determined that 110 acre-feet of water per year will be physically and continuously available for 100 years at this greater depth."
>
> "The Department has also calculated the current and committed demands associated with Flagstaff Meadows to be 109.46 acre-feet per year. In order to establish the current and committed demands, the Department examined the lots associated with Flagstaff Meadows Unit I (133 lots), Flagstaff Meadows Unit II (87 lots), and Town homes at Flagstaff Meadows Unit I (105 units), for a total of 325 dwelling units. The Department also reviewed the potable non-residential demands associated with the provider that included the Bellemont Truck Center and its associated hotel and restaurant. Please note that if future demands are anticipated, additional hydrologic analysis and well drilling/deepening will be needed to demonstrate the continuous availability of an additional supply."

ADWR's review of the July 2004 Flagstaff Meadows PAD did not include Flagstaff Meadows Unit III (120 lots) and Flagstaff Meadows Townhouses Unit II (230 lots). These elements of the planned community are addressed in this current separate PAD. It should also be noted that ADWR made reference to the position of Flagstaff Meadows with the known Navajo Army Depot Department of Defense (DOD) superfund site. GLD, ADWR, and the Arizona Department of Environmental Quality (ADEQ) are aware of ongoing testing and monitoring

activities being performed in the area. ADWR indicated the following text in their referenced letter:

> "Due to the ongoing oversight of ADEQ, testing and monitoring of the potable system under the SWDA, and additional testing and monitoring activities by the Navajo site of the deep supply wells, the Department finds that the requirements for adequate water quality under A.A.C. R12-15-718 have been met."

5.0 GEOLOGY

The geology in the Flagstaff area has a history of published work dating back as early as the year 1910. Much of the early and most recent work includes a variety of maps, water resources investigations reports and bulletins prepared by the USGS. Throughout many phases of the work performed within the USSA, HSI has maintained contact with Don Bills of the USGS Water Resources Division located in Flagstaff, Arizona. In subsequent sections of this PAD reference has been made to one of the later USGS publications entitled *Hydrogeology of the Regional Aquifer near Flagstaff, Arizona, 1994-97* (Bills, et al., 2000). When applicable to this PAD, an attempt has been made to remain consistent with geologic and hydrogeologic terminology found in the Bills (2000) report.

5.1 Physiographic Setting

Three distinct geographic landforms are recognized in Arizona from north to south including: the Colorado Plateau, Transition Zone, and Basin and Range physiographic provinces. The Colorado Plateau has been subcategorized as the Coconino Plateau south of the Colorado River. The Coconino Plateau covers an area of approximately 5,000 square miles consisting of a thick sequence of Paleozoic and younger consolidated sedimentary rocks (Bills and Flynn, 2002). Humphreys Peak of the San Francisco Mountain represents the highest point in the area, attaining an elevation of 12,633 feet above Mean Sea Level (msl). Several topographic features and place references in the Bellemont and Flagstaff area are shown on *Figure 3*. When viewing this figure, the contours are in meters above msl (elevations and distances are given in feet unless otherwise noted in the PAD). The community of Bellemont lies at an elevation of approximately 7,130 feet msl.

No major surface water features are present in the study area. Surface water is received primarily from localized storm systems and is conveyed from the area by ephemeral streams and washes. Climatologically, this part of northern Arizona is classified as semiarid with extremes of precipitation and temperature during the year (Bills, et al., 2000). Precipitation data from the Flagstaff Airport indicates approximately 21.5 inches per year (DRI, 2005). Vegetation in the vicinity of Bellemont consists of a Ponderosa pine forest with a mix of juniper and aspen trees, and low profile drought-tolerant grasses.

5.2 Regional Geology

The Town of Bellemont and its adjacent larger neighbor Flagstaff rest near the southern edge of the Colorado Plateau. In northern Arizona the Colorado Plateau is composed of Cambrian through Mesozoic sedimentary rocks overlain by Tertiary and Quaternary volcanic and sedimentary rocks. Unlike areas to the south and west in the Basin and Range Province, where Late Cretaceous through Tertiary tectonism have greatly modified the geology, the Colorado Plateau has for the most part retained its layer-cake stratigraphy. A thick sequence of predominantly Paleozoic sedimentary rocks underlays this area with a relatively thin cover of Cenozoic volcanic rocks and alluvium on the ground surface (Thorstenson and Beard, 1997). The stratigraphic units typically found in the area, from top to bottom, include: alluvium, volcanic rock, Kaibab Formation, Toroweap Formation, Coconino Sandstone, Schnebly Hill Formation, Supai Group, Redwall Limestone, Temple Butte Formation, followed by crystalline bedrock consisting of granite and schist. *Figure 6* is a generalized stratigraphic section of rock units found in the area as prepared from regional hydrogeologic information by the USGS (Bills, et al., 2000). The Paleozoic and Mesozoic formations on the Plateau are only slightly faulted and overall dip gently to the northeast. The regional groundwater table roughly follows the same trend, decreasing in elevation to the northeast (McGavock et al., 1986; and Bills, et al., 2000).

The Paleozoic and Mesozoic sedimentary rocks of the Plateau are overlain by at least two distinct sequences of volcanic rocks. An older sequence of mostly basalts erupted between about 9 to 4 million years ago (abbreviated Ma) and is exposed mostly south of Flagstaff overlapping the southern escarpment of the Colorado Plateau (Ulrich, 1984). The younger volcanic sequence includes the San Francisco volcanic field and includes flows of basalt, dacite, and rhyolite erupted from about 4 Ma up to only about 500 years ago (Ulrich, 1984). Remnants of the Triassic Moenkopi Formation underlying volcanic rocks in Flagstaff and to the north show that most of the Mesozoic and any younger rocks were stripped away prior to eruption of the San Francisco volcanic field.

5.3 Local Geology

The community of Bellemont rests about 2 miles north of the boundary between the younger volcanic sequence to the north and the older volcanic sequence to the south, described above (Ulrich and others, 1984; Pearthree et al., 1996). In this area, both sequences are

composed almost entirely of basalt flows, locally interbedded with alluvium. The basalt flows and interbedded alluvium range from approximately 100 to 300 feet thick, and rest directly on Kaibab Formation according to information contained in the well logs within the USSA. It is not clear from the well cuttings just how much of the basalt belongs to the older sequence and which belong to the younger sequence, though they probably both exist in this area. Many volcanic vents (cinder cones) are visible in the area surrounding Bellemont. The sides of these vents are characteristically composed of loose cinders, locally held together by pedogenic carbonate and/or soil.

5.4 Structural Interpretation

As shown on the structural contour map created by Ulrich and others (1984) the Paleozoic sedimentary rocks in the Flagstaff area (and indeed in most of the Colorado Plateau of northern Arizona) dip very gently to the northeast. Ulrich and others (1984) have drawn the contours at the top of the Kaibab Formation and at the base of the Moenkopi Formation. Structural contour maps are very useful for visualizing regional trends and identifying structural controls of rock units because they eliminate or "see through" the complexities of the modern topography.

The structural contours define a northwest-striking anticline forming an elongated ridge whose axis is about 5 miles south and southwest of Bellemont. Bellemont itself rests on the northeast side of this anticline where the structural contours make a bend to the southwest then bend back to the northeast (Ulrich and others, 1984). Since the contours decrease in elevation to the northeast, this bend may represent either a local sag due to folding in the Kaibab Formation, or a possible erosion channel in the top of the same formation.

Small grabens are abundant on the Kaibab Plateau all around the San Francisco volcanic field. Many graben cut Plio-Quaternary volcanic rocks have subsequently been filled with Quaternary alluvium. South of Bellemont abundant grabens strike mostly northwest-southeast (Ulrich and others, 1984), and most appear to be older than the younger sequence of basalts. It is possible that there are one or more grabens underneath Bellemont that are buried by younger basalts.

The northeast-striking Bellemont fault cuts across the Navajo Army Depot (Camp Navajo) and northward across Interstate 40 (I-40) for a total distance of about 7 miles. The position of the Bellemont fault is shown on *Figure 7*. This fault was the focus of a detailed seismological study by Pearthree and others (1996). The Bellemont fault is considered an active fault, although there is no evidence of surface rupture within the last 10,000 years. The time between surface ruptures on the fault is probably between 40,000 and 130,000 years, and the magnitude of the youngest surface-rupturing earthquake on the fault was probably 6.6 to 6.9 (Pearthree et al., 1996).

Movement on the Bellemont fault down-dropped basalt on the west side with respect to the east side, and has produced a west-facing scarp 15 to 30 feet high. In the past, the scarp blocked drainage from escaping to the east across the scarp and likely created a small lake filled with fine-grained lake sediments at Bellemont Flat. These sediments are quite identifiable in the cuttings from the Bellemont Deep Well 3 as fine-grained silts and clays between depths of about 20 and 140 feet. Pearthree and others (1996) reported that basalt flows also formed dams to external drainage in the Bellemont area. Wolfe and others (1987) called the fine-grained sediments the Camp Navajo clay, which they said were up to 65 to 100 feet thick on the west side of the Bellemont fault. Pearthree and others (1996) stated that the sediments are overlain by the ~0.5 Ma "Headquarters" basalt flow.

Thorstenson and Beard (1997) mapped an unnamed northwest-striking fault north of the Navajo Army Depot *(Figure 7)*. The fault was inferred from remote sensing imagery. Since the type of imagery was not specified, the lineament (and the existence of the fault) is difficult to evaluate. The lineament roughly parallels the southwest contact between a basalt flow on the east and Quaternary alluvium on the west. The dramatic increase in slope immediately to the east suggests a possible fault-related scarp. CSAMT data acquired during this study has proven the existence of this fault. For further information on this fault and its effects on the CSAMT data see *Section 7.0*.

6.0 HYDROGEOLOGY

The Bellemont study area is situated in the Coconino Plateau where groundwater is found in isolated shallow aquifers of limited aerial extent and/or deep regional aquifers. The study area is included within the Verde River Watershed of central Arizona. The groundwater system of this watershed is identified as the Middle Verde Subwatershed with the study area included in the Verde Valley Sub-Basin (ADWR, 2000). Groundwater is used to meet the water needs within the USSA from wells accessing both the shallow and regional aquifers. The regional aquifer represents a more dependable water resource which is the focus of this PAD to meet the future water demands of the growing community. A brief discussion is provided regarding the shallow aquifer, followed by a more lengthy description of the regional aquifer.

6.1 Wild Bill Hill Aquifer

The shallow aquifer in the study area is known as the Wild Bill Hill aquifer (Wilkinson, 2000). Groundwater in this aquifer is found predominantly in the alluvial unconsolidated sediments and volcanic units. This shallow aquifer has been one source of groundwater for municipal and domestic water needs of the USSA. Five wells drilled within the USSA receive groundwater from the Wild Bill Hill aquifer. Information regarding the USSA shallow wells are summarized in *Table 4*. The Wild Bill Hill aquifer is a perched system of limited aerial extent where the Camp Navajo clay acts as the lower confining layer (Wilkinson, 2000). Groundwater is estimated to recharge the Wild Bill Hill basalt from Bellemont Flat (north of the property) and to the west from the Eastern Plateau. Precipitation received from regional and localized storm events consisting of rain and snow melt recharge the shallow aquifer.

Five of the USSA wells are shallow, accessing groundwater from the Wild Bill Hill aquifer. Water production from wells A, B, C, D, and E are estimated at 7 gpm, 12, gpm, 10 gpm, 5 gpm, and 10 gpm, respectively. Driller's logs for these wells indicate penetration of clay, gravel, boulders, and volcanic rocks (*Appendix D*). The depths of the wells range from 65 to 300 feet. The Wild Bill Hill aquifer represents a very limited water resource. Increased development in the area will only exacerbate impacts to the Wild Bill Hill aquifer. Although Utility Source has and will continue to utilize groundwater from this shallow aquifer to meet some current and

future water demands within the service area, it is not considered in this PAD for water resource estimates.

6.2 Regional Coconino Aquifer

In previous published reports on the Coconino Plateau by the USGS, ADWR, and other researchers, groundwater found in the deeper Permian and Paleozoic sedimentary units has been referenced as the Coconino aquifer (McGavock, et al., 1986), regional aquifer (Bills, et al., 2000), and more recently the C aquifer (Bills, et al., 2005). The "regional aquifer" terminology is referenced in most places in this PAD. The regional aquifer is found primarily in the eastern and southern parts of the Coconino Plateau. Groundwater is found under unconfined conditions in most of the regional aquifer, but in the Bellemont area, groundwater is appears as confined based on dramatic water level increases experienced during drilling. The appearance of confined conditions, however, may be related to fracturing of the host system. Below the regional aquifer is the Redwall-Muav aquifer (Redwall aquifer) which is generally encountered at depths of 3,000 feet or greater below the land surface covering an estimated 5,000 square mile area (Bills, et al., 2005). It is possible that the regional aquifer is in hydraulic connection with the underlying Redwall-Muav aquifer in the Bellemont area.

6.2.1 Hydrogeologic Units

Utility Source, LLC has four deep wells that access groundwater from the regional aquifer. Based on the static water levels recorded on the well completion logs, the saturated hydrogeologic sedimentary units, in descending order, include the Coconino Sandstone, Schnebly Hill Formation, and Supai Group which rests on top of the Redwall Limestone. The relative positions of these units are shown on *Figure 6*. Each of these units is summarized below from drilling and logging of the four deep wells in the USSA with unit descriptions taken from the USGS report of the Flagstaff area (Bills, et al., 2005). Well logs for the deep wells are provided, following the shallow well logs, in *Appendix D*.

Coconino Sandstone: The Coconino Sandstone is Permian in age, tan to white to light brown in color, cross-stratified, nearly pure, eolian, fine-grained quartz sandstone. The depth to the top of this unit ranges from 410 to 920 feet with the bottom of the unit ranging from 1,230 to

1,450 feet below land surface. The Coconino Sandstone is not saturated in the USSA but it is saturated south of I-40 according to well logs for Camp Navajo.

Schnebly Hill Formation: The Schnebly Hill Formation is Permian in age, consisting of reddish-brown to reddish-orange very fine to silty sandstone, mudstone, limestone, and dolomite. This unit classification has been developed within the last 15 years, where the Schnebly Hill Formation was previously included as part of the lower Coconino Sandstone or upper portion of the underlying Supai Group units or as a transition zone between the Coconino Sandstone and Supai Group. The presence of the Schnebly Hill Formation could not be distinguished from three of the well logs within the USSA. Drill cuttings and geophysical logging of Deep Well 3 on the downthrown side of the Bellemont fault indicated the Schnebly Hill Formation from 1,315 to 1,870 feet deep where this unit is partially saturated by groundwater.

Supai Group: The Supai Group is Permian in age divided into upper, middle, and lower formations. The Upper Supai Formation is reddish-brown to tan, fine-grained sandstone, red-brown siltstone, occasional thin-bedded mudstone and limestone, hard white to pale-red fine to medium-grained sandstone, and a complex series of red beds that are mostly fine-grained sandstone, siltstone, and mudstone. Drilling encountered the top of the Upper Suapi Formation in the USSA at depths ranging from 1,230 to 1,450 feet. The Middle Supai Formation is orange, rounded, very fine-grained calcareous sandstone with the top of the formation estimated at 2,320 feet at two well sites. The Lower Supai Formation is mainly red and purple sandstone and siltstone and gray limestone and dolomite. In some places, the bottom of the formation contains conglomerate or breccia-type material composed of cherty limestone, chert clasts, and mudstone or claystone. It is possible that Deep Well 4 penetrated the upper part of this formation. The Lower Supai Formation is the confining layer for groundwater in the underlying Redwall Limestone.

Redwall Limestone: The Redwall Limestone is Mississippian in age, fine-grained light-gray to gray limestone or dolomite that is thin bedded and occasionally oolithic. The Redwall Limestone is a separate aquifer and can be in hydraulic connection with the overlaying regional aquifer. According to drill cutting samples, none of the Utility Source, LLC wells penetrated the Redwall Limestone aquifer.

6.2.2 Hydrogeology and Structure

Tectonic activity on and adjacent to the Colorado Plateau in the form of compressional and tensional stresses have created faults and folds resulting in varying changes to the sedimentary units of the regional aquifer. Wells drilled and logged in the Bellemont area show evidence of this tectonic activity from apparent offsets in the sedimentary units at depth between well sites. Faults formed from tensional and compressive stresses can act as conduits or barriers to groundwater movement. Shattered rocks in fault zones are normally permeable, whereas gouge zones consist of fine-grained to clay-sized material that can be impermeable.

Bills and others (2000) report from their investigations in the Flagstaff area that the regional aquifer is characteristically heterogeneous and anisotropic with a complex groundwater flow system. The most productive water-bearing sediments are the fine- to medium-grained sandstones. A major factor controlling groundwater flow is geologic structure (Bills, et al., 2000). For example, the City of Flagstaff has several water production wells that pump groundwater from the regional aquifer. Water production from these wells ranges from a low of 4 gpm to a high of over 1,700 gpm. The average well yield is estimated at 175 gpm. According to the USGS, the range in well yield is related to several factors including: formation lithology, degree of fracturing, degree of secondary mineralization of the aquifer (cements), penetrated saturated thickness, well efficiency, pump design, and pumping lift. The greatest effect, however, is related to the type and degree of fracturing. It has been noted that wells typically completed in, or in close proximity to, fractures yield more than 100 gpm (Bills, et al., 2000).

Figure 7 shows the two known structures that influence groundwater production in the Bellemont area. The northeast trending structure is the Bellemont fault. Two wells drilled in close proximity to this fault include the Camp Navajo Well (CN1) and Deep Well 3 shown on *Figure 8*. The other northwest trending structure is referenced as the unnamed fault where Deep Well 4 is located. *Section 9.4* contains a discussion from drilling and aquifer testing along the Bellemont and unnamed faults indicating contrasting differences between these two structures related to groundwater production.

6.2.3 Well Locations and Water Levels

The ADWR maintains the most comprehensive database of well information in Arizona. For this study, HSI accessed information contained in the groundwater site inventory (GWSI) and well registry 55-files. Copies of the well data are provided in an expanded area including Townships 21 and 22 and Ranges 5 and 6 in *Appendix E*. The 55-file lists 636 wells in the area where it is estimated that only 23 wells are drilled to the regional aquifer. *Figure 8* shows seven wells drilled in the regional aquifer on and in close proximity to the USSA.

The GWSI contained water level data for two of the deep wells shown on *Figure 8*, referenced as El Paso NG and Camp Navajo 1. Data for Camp Navajo 2 came from the well completion report. Before conducting aquifer testing for Utility Source, LLC, obstructions in the airline hindered updated groundwater measurements from Deep Well 1 and Deep Well 2. Water levels for these two sites came from the well completion reports. Water levels for Deep Well 3 and Deep Well 4 were measured prior to aquifer testing in August 2005.

As noticed from the GWSI and 55-files, groundwater information for the regional aquifer in the Bellemont area is extremely limited. When viewing the water level data presented on *Figure 7*, it is difficult to estimate the groundwater flow direction. It is interesting to note, however, that water level measurements for the three wells west of the Bellemont fault indicate that groundwater is flowing north in agreement with regional aquifer studies (Bills, et al., 2000 and McGavock, et al., 1986). The three wells in close proximity to the east side of the Bellemont fault show groundwater flowing towards the south. The water level measurement from Deep Well 4 appears anomalous when compared with the other water level data. Based on this limited information, it is difficult to explain the apparent differences. The differences could be related to geologic structure influences or errors in water level measurement. The data does indicate that the groundwater flow system is complex as noted in regional studies by the USGS (Bills, et al., 2000 and McGavock, et al., 1986). In consideration of the regional studies, the general groundwater flow direction is from south to north.

6.2.4 Aquifer Characteristics

The USGS has reviewed previous aquifer testing data in addition to conducting aquifer testing in the Flagstaff area to estimate transmissive, storage properties, and the specific capacity

characteristics of the regional aquifer (Bills, et al., 2000). According to the USGS, transmissivity ranges from 100 to 35,000 gallons per day per foot from drawdown and recovery testing information. Storage estimates range from 0.00023 to 0.05. Specific capacity ranges from 0.014 to 13.0 gallons per minute per foot of drawdown. These regional aquifer characteristics will be compared with comprehensive aquifer testing of the Utility Source, LLC wells in *Section 9.0.*

6.2.5 Recharge

Recharge in the Flagstaff area occurs from precipitation in the form of rain and snowmelt. Recharge to the regional aquifer is estimated to occur above an elevation of 7,000 feet where greater amounts of precipitation are received. According to data collected over a 55-year period, the Flagstaff airport receives approximately 21.5 inches of precipitation annually (DRI, 2005). Prior research in the Lake Mary area referenced by the USGS indicated that of the average annual precipitation received approximately 4 to 17 percent is estimated as recharge to the regional aquifer (Bills, et al., 2000). With this information as a base, the USGS estimated recharge to the regional aquifer at 290,000 acre-feet per year over the 1,600 square mile (1,024,000 acres) Flagstaff study area. This is equivalent to a one acre parcel receiving approximately 0.283 feet per year of recharge. Land in the Bellemont regional study area (*Figure 3*) lays above 7,000 feet msl except for portions of three sections on the southwest side of the area near Volunteer Canyon. Elevations in these sections are just above 6,800 feet. Using the recharge value of 0.283 feet per year and considering approximately 92,160 acres of land in the Bellemont regional study area, possible recharge to the regional aquifer is estimated at 26,081 acre-feet per year.

7.0 SURFACE GEOPHYSICAL SURVEY

As summarized in *Section 4.1*, HSI and Zonge performed a geophysical survey and well site evaluation to locate Deep Well 3 within the USSA. Shortly after completion and aquifer testing of Deep Well 3, a 20-acre parcel of land became available for purchase approximately one mile to the east of Deep Well 3. Before purchasing the property, as part of the due diligence process, Utility Source, LLC requested HSI to perform a preliminary hydrogeologic feasibility evaluation. During this activity, available surface geologic mapping indicated an unnamed northwest trending fault traversing a portion of the property (Pearthree, et al., 1996 and Thorsten and Beard, 1997). In order to confirm the presence and location of the fault and potential for developing groundwater resources, Zonge performed a CSAMT survey on the 20-acre parcel in addition to extending the survey to other property in the Flagstaff Meadows subdivision and on U.S. Forest Service (USFS) land.

This section of the PAD provides details as to how the survey was performed with accompanying cross-sections. This section also presents the type of investigative effort that is necessary to locate water production wells in this area; accessing groundwater from fractured rock units in the regional aquifer.

7.1 Method Overview

The CSAMT method is a frequency-based, electromagnetic sounding technique that uses a remote synchronous signal source. The electromagnetic signal is generated by a large, grounded dipole using frequencies in the range of less than 1 hertz (Hz) up to about 8,000 Hz. (A dipole is a pair of electrodes connected by insulated conducting wire, which is used to either generate or detect an electrical voltage.) Measurements of the components of the electric and magnetic field (E and H, respectively), made along linear arrays of stations, are used to calculate the resistivity structure of the earth. The ratio of orthogonal, horizontal electric and magnetic field magnitudes (e.g. Ex and Hy) yields the apparent resistivity of the earth (sometimes called Cagniard resistivity). The difference between the phase of the electric and magnetic fields yields the impedance phase, which is often just called phase or phase difference.

The depth of investigation for CSAMT depends on frequency and on subsurface resistivity. In general, lower frequencies and higher ground resistivities allow a greater depth of

investigation. The CSAMT method has proven useful for mapping the earth's crust in the 60 to 6,500 foot depth range. Lateral resolution is controlled primarily by the receiving stations' electric field dipole lengths, usually 30 to 660 feet in length. Vertical resolution is generally 5 to 20% of the depth.

Calculated resistivity values from CSAMT data relate to electrical/magnetic properties of the geology. Primary factors affecting resistivities include rock or sediment porosity, pore fluids, and the presence of certain mineral assemblages. For hydrological investigations, CSAMT data has provided critical information about geologic structure, lithology, water table depth and trends, and pore fluid salinity trends. CSAMT has been successfully applied to many well site evaluations in northern Arizona.

7.2 Survey Parameters

Land to the north and east of the CSAMT survey is under the jurisdiction of the U.S. Forest Service (USFS). Since the CSAMT utilizes remote temporary transmitter sites, the USFS required a special use permit. Mr. Ken Jacobs is the local contact for Coconino National Forest and assisted with permitting of the transmitter sites. Because some of the survey lines did not have the same directional orientation, various arrangements for the transmitter dipoles were necessary. Generally, the transmitter site is positioned perpendicular to the lines of the survey. For this survey, seven separate survey lines were positioned. Lines 1, 2, 4, 5, 8, and 9 had a west to east orientation and Line 3 extended from northwest to southeast. The transmitter sites for these orientations were positioned approximately 4 miles north of the survey lines. Lines 6 and 7 had a south to north orientation with the transmitter positioned approximately 3.5 miles east of the survey lines. Preparation and appearance of the typical transmitter and diploes used for the survey are shown on *Photos 1 and 2*.

The survey consisted of nine lines of data covering a total of approximately 15,850 line feet with a station spacing (electric-field dipole length) of 100 feet for lines 1 through 6 and 75 feet for lines 7, 8, and 9. *Figure 9* shows the survey lines and individual station locations. The data were gathered in sets (or 'spreads') of four stations each (four receiver dipoles). For each spread, the measured data included electric-field dipoles approximately parallel to the transmitting dipole plus the horizontal magnetic field perpendicular to the electric-field dipoles. At each spread, the transmitter generated a square-wave signal at discrete frequencies from 4 Hz

to 8,192 Hz in binary increments (i.e., 4, 8, 16, 32 Hz, etc.). At all frequencies, the receiver recorded the received electric field and magnetic field magnitude and phase components, as well as the data at the odd harmonics (3rd, 5th, 7th) of the transmitted frequencies, providing a very large data set for modeling purposes. Passive radio-frequency (RF) filters were used to minimize possible problems in the data due to RF transmissions from the Flagstaff area.

The field crew recorded all ground locations for each receiver electrode with a hand-held Garmin GPS. Generally errors in these positions may range from 10 to 16 feet depending on the position and availability of satellites and local obstructions to the GPS unit.

7.3 Field Instrumentation

The receiver used for the CSAMT survey was a Zonge GDP-32II multi-purpose receiver. This receiver is a backpack-portable, 16-bit, microprocessor-controlled receiver capable of gathering data on as many as 16 channels simultaneously. The electric-field signal was sensed at the receiver site using porous, copper-sulfate filled, ceramic "pots", connected to insulated wires which connect directly to the centrally positioned GDP-32II receiver. *Photo 3* shows the GDP-32II receiver and one of the ceramic pots used for the survey. The magnetic-field signal was sensed with an ANT/3 ferrite-core magnetic field antenna, also manufactured by Zonge Engineering. The signal source for the survey was a Zonge GGT-30 transmitter, which is a current-controlled transmitter capable of 30 kilowatts (kW) output. The transmitter was controlled with an XMT-32 transmitter controller, which contains a quartz oscillator identical to one in the receiver. The transmitter truck and generator used for the survey are shown on *Photo 4*. Each morning prior to data acquisition, the two oscillators were timed and synchronized in order to allow the crew to acquire phase data of the individual electric and magnetic field components. Synchronization was then re-checked and recorded at the end of each field day.

7.4 Inversion Models

Zonge's 1-D smooth-model inversion program, SCSINV, is a robust method for converting the raw CSAMT data (measured resistivity and phase as a function of frequency) to profiles of resistivity versus depth. Cagniard apparent resistivities and impedance-phase data for each station are used to determine the parameters of a layered earth model. Layer thicknesses are fixed by calculating source-field penetration depths for each frequency. Layer resistivities are then adjusted iteratively until the model CSAMT response is as close as possible to the

observed data. The algorithm for calculating the CSAMT response of a layered model includes the effects of finite transmitter-receiver separation and a three-dimensional source field.

The 2-D inversion program SCS2D was also used in the examination and interpretation process. The 2-D modeling program differs from the 1-D in that the mathematical model in 1-D for any given station is based on the data at that station only, and there is no influence from data acquired at surrounding stations. In the 2-D program, the mathematical model at each station is influenced by surrounding stations. This tends to generate smoother models, but also can propagate noise from one station to surrounding stations. An additional difference between the two types of models is that the 2-D model is valid only for "far-field" data (frequencies at which the electromagnetic field is a plane wave at the receiver site), thus some low frequencies that are used in the 1-D model may not be used in the 2-D model. As a result, the 2-D model results usually do not extend as deep as the 1-D models. Although the interpretation of the data includes examination of both 1-D and 2-D results, only the 1-D model cross-section results are included in this report.

7.5 Data Quality

The geophysical data quality is evaluated in several ways. First, at the level of individual measurements, a standard error of the mean (SEM) value can be calculated, since each individual measurement is comprised of tens, hundreds, or thousands (depending on the frequency) of stacked and averaged waveform cycles. The SEM value is displayed for the operator and stored in memory with the data. Stacking and averaging removes random electrical noise from the measurement, and small SEM values indicate that random noise has been averaged out of the measurement.

At the next level, all measurements are repeated multiple times, so that stacked-and-averaged measurements can be compared for repeatability. This helps identify measurements that may be influenced by strong, sudden spikes of noise, such as from distant lightning strikes. Multiple measurements are displayed on the operator's screen as resistivity curves with error bars, so that the operator can identify noisy frequencies or periods. Multiple measurements are also stored individually in memory, for later evaluation.

Final processed and modeled data are also evaluated for line-to-line correlation and consistency with the known or suspected geology. In a layered environment, for example,

multiple closely spaced lines should produce relatively similar results. Similarly, background resistivity can often be estimated in advance based on geologic information, and data can be evaluated with respect to general expectations (dry crystalline rock versus saturated sediments, for example).

At all three levels, the USSA data quality is considered good to very good. Data at the fundamental frequencies (the frequencies that are actually transmitted) were very repeatable, with resistivities typically repeating within 4%, and on most lines, even the 3rd and 5th harmonics of the fundamental frequencies were repeatable enough to be used in final modeling (signal strength drops rapidly on the increasing harmonics). Individual frequencies were occasionally noisy near cultural features, but overall repeatability was good and resistivity curve shapes were realistic. Final results showed good line-to-line consistency, and good correlation with the expected geology, such as high resistivities east of the unnamed fault, for example.

7.6 Survey Results

The model data are presented as a series of cross-sections collected along all nine survey lines. *Figures 10 through 17* show the 1-D model survey results in numerical order. In all the figures, resistivity values are shown in units of ohm-meters, with warm colors (oranges, reds) indicating low resistivity (conductive materials) and cool colors (greens, blues) indicating high resistivity (resistive materials). The survey line stations are shown at the top of the cross-sections with the depth (elevation amsl) of the survey indicated on the sides of the cross-sections. The location of the survey lines are shown on *Figure 9*. Details for each line are discussed below.

Line 1: This line extends 1,600 feet from west to east with the CSAMT survey taking place on November 6 and 7, 2004. *Figure 10* is the cross-section having a dipole spacing of 100 feet and depth of survey at approximately 3,000 feet. At Station 1,000 a vertical anomaly is apparent which corresponds with the surface geologic mapping that indicated a northwest trending unnamed fault on the 20-acre parcel of land (Pearthree, et al., 1996 and Thorsten and Beard, 1997). The anomaly at Station 1,000 has a similar appearance to the Bellemont fault when compared with the CSAMT cross-sections for locating Deep Well 3 (*Figure 5*). The unnamed fault at Station 1,000 is estimated to extend beyond a depth of 3,000 feet. Drilling of a water production well is recommended in close proximity to Station 1,000. It should also be

noted that the power line referenced on *Figure 10* supplies electric service for a mobile home and did not affect the data collected for the survey on Line 1.

Line 2: This line is south and parallel to Line 1 and extends 1,400 feet from west to east with the CSAMT survey taking place on November 6 and 7, 2004. *Figure 11* is the cross-section having a dipole spacing of 100 feet and depth of survey at approximately 3,000 feet. When comparing this data with surface geologic mapping (Pearthree, et al., 1996 and Thorsten and Beard, 1997), the position of the unnamed fault is estimated near Station 900 on the 20-acre parcel of land. This is based on the rapid increase in resistivity values on the east end of the cross-section at depth. Although some vertical anomalies are noticed on *Figure 11*, Line 2 does not appear to offer a favorable location for a water production well when compared with the cross-section for Line 1.

Line 3: This line extends 3,600 feet from northwest to southeast with the CSAMT survey taking place on January 7 through 17, 2005. *Figure 12* is the cross-section having a dipole spacing of 100 feet and depth of survey over 3,000 feet. At Station 1,700 the survey line crossed over a gas pipeline. The low resistivity values at Station 1,400 may be affected by the pipeline. According to *Figure 12*, Line 3 does not indicate a promising location for drilling a water production well.

Line 4: This line extends 4,600 feet from west to east with the CSAMT survey taking place on January 7 through 17, 2005. *Figure 13* is the cross-section having a dipole spacing of 100 feet and depth of survey over 3,000 feet. The anomaly shown on *Figure 13* at Station 1,400 corresponds with the surface geologic mapping of the unnamed fault (Pearthree, et al., 1996 and Thorsten and Beard, 1997). A water production well could be located in close proximity to Station 1,400, however, at this time the land is under the jurisdiction of the USFS.

Line 5: This line extends 500 feet from west to east with the CSAMT survey taking place on January 7 through 17, 2005. *Figure 14* is the cross-section having a dipole spacing of 100 feet and depth of survey at over 3,000 feet. The location of the unnamed fault is east of Station 1,400, which agrees with the expected location of the fault shown on the surface geologic mapping (Pearthree, et al., 1996 and Thorsten and Beard, 1997). Line 5 was performed as a short test segment, checking the survey results collected from Line 4.

Line 6: This line extends 2,000 feet from south to north with the CSAMT survey taking place on February 16 through 23, 2005. *Figure 15* is the cross-section having a dipole spacing of 100 feet and depth of survey at approximately 3,700 feet. The purpose of this line was to check the expected location of the unnamed fault to the northeast of property owned by GLD. The survey took place on USFS land. The anomaly shown at Station 800 is the estimated location of the unnamed fault, which agrees with the surface geologic mapping (Pearthree, et al., 1996 and Thorsten and Beard, 1997). No well sites are planned in this area.

Line 7: This line extends 750 feet from south to north with the CSAMT survey taking place on February 16 through 23, 2005. *Figure 15* is the cross-section having a dipole spacing of 75 feet and depth of survey at approximately 3,700 feet. This line crossed over one of the vacant lots of the Flagstaff Meadows subdivision. The unnamed fault is estimated at Station 388 which agrees with the surface geologic mapping (Pearthree, et al., 1996 and Thorsten and Beard, 1997). This property is now developed and is not considered for drilling a water production well.

Line 8: This line extends 750 feet from west to east with the CSAMT survey taking place on February 16 through 23, 2005. *Figure 16* is the cross-section having a dipole spacing of 75 feet and depth of survey at approximately 3,700 feet. On the west end of *Figure 16*, this line crossed a vacant lot in the Flagstaff Meadows subdivision and extended east to USFS land. The location of the unnamed fault is near Station 203 which agrees with the surface geologic mapping (Pearthree, et al., 1996 and Thorsten and Beard, 1997). Because of the contrasting vertical resistivity changes west of Station 203, the location of a water production well was recommended near Station 38. The advantage of this location included having a well readily accessible to infrastructure, topographic elevation, and on land available to Utility Source, LLC within the Flagstaff Meadows subdivision.

Line 9: This line extends 750 feet from west to east with the CSAMT survey taking place on February 16 through 23, 2005. *Figure 17* is the cross-section having a dipole spacing of 75 feet and depth of survey at approximately 3,700 feet. As with Line 8, Line 9 traversed a vacant lot in the Flagstaff Meadows subdivision extending east to USFS land. A well site location is estimated near Station 488 but was given a lower priority because the position of the line does not indicate the unnamed fault. The surface geologic mapping shows the fault farther east of the line (Pearthree, et al., 1996 and Thorsten and Beard, 1997).

7.7 Conclusions

The goal of the CSAMT geophysical survey and well site evaluation included confirming the presence of an unnamed fault identified from previous surface geologic mapping and potential for drilling another deep well into the regional aquifer on the 20-acre parcel of land within the USSA and owned by GLD. According to the data collected from the nine CSAMT survey lines, the location of the northwest trending unnamed fault was successfully and consistently identified as indicated on many of the cross-sections. Although the surface geologic mapping identified the structure, the CSAMT survey helped to refine and confirm the actual location of the fault at depth. Based on this data it is recommended that the first priority for locating a water production well should be on Line 1 at Station 1,000. A second location is recommended on Line 8 at Station 38. There are other potential water production well sites on USFS land that are not offered for consideration at this time.

Figure 18 is a map showing all of the CSAMT survey lines performed within the USSA with the positions of the Bellemont and unnamed faults indicated. This figure summarizes the amount of detailed surface geophysical work used to locate well sites to access groundwater from the regional aquifer in fractured sedimentary rocks on the Coconino Plateau. Each small dot on the individual survey lines indicates one data collection point used to model the CSAMT survey results.

8.0 DRILLING AND WELL CONSTRUCTION DEEP WELL 4

The CSAMT geophysical survey provided identification of the northwest trending unnamed fault that crosses the 20-acre parcel of land owned by GLD on Line 1 near Station 1,000 as shown on *Figures 9 and 10*, respectively. The CSAMT survey indicated low resistive material extending in a near vertical direction to a depth in excess of 3,000 feet. On April 21, 2005 Utility Source, LLC, HSI, and the owner of Advance Drilling Technology, LLC (ADT) of Scottsdale, Arizona conducted a site visit to locate and mark Station 1,000 for later placement of the drilling rig. The new well at this location is referenced as Deep Well 4, which was planned to access groundwater from the regional aquifer.

In May 2005, Utility Source, LLC negotiated a contract with ADT to provide well drilling services for drilling and casing installation of Deep Well 4. ADT performed their services according to technical specifications, and applicable addendums prepared by HSI. Because the well is situated within a location identified by ADEQ as a Water Quality Assurance Revolving Fund (WQARF) area, certain well completion permitting requirements had to be met. HSI worked closely with ADEQ and ADWR to prepare a well design to conform to the regulatory requirements. *Figure 19* is the conceptual well design for Deep Well 4 based on well construction notes observed between HSI and ADT. The well design will be finalized once the slotted casing has been installed. The cadastral location for Deep Well 4 is A(21-6)6cba and the ADWR registration number is 55-206887.

8.1 Borehole Drilling

On May 7, 2005 ADT drilled and set 20-inch steel casing to a depth of 20 feet as part of the ADWR surface seal requirement. On May 8 drilling of the 17-inch pilot borehole began followed with installation of 16-inch steel casing. ADT drilled a majority of the borehole by the dual rotary method, which allows drilling of the borehole with immediate advancement of the well casing. This method proved advantageous in an area of northern Arizona noted for difficult drilling due to caving of the borehole (above the water table) and lost circulation (below the water table). Neither of these conditions hindered the drilling process to the entire depth of the borehole. ADT advanced the 16-inch casing to a depth of 400 feet (*Photo 5*). At this depth the bit size was reduced to a 15 ¾ inch tricone to keep the 16-inch casing from slipping deeper into

the borehole. At 430 feet ADT removed the downhole tooling and switched over to a 12-inch under reamer hammer bit (*Photo 6*), to accommodate and advance 10-inch steel casing to a depth of 2,260 feet.

In compliance with the ADEQ WQARF requirements, ADT placed a neat cement seal from 430 up to 380 feet between the 10-inch casing and open borehole. As indicated on *Figure 19*, 20 feet of the 16-inch casing had to be pulled back and cut off to allow for a proper seal. During the drilling operation, rotation of the 10-inch casing indicated that the deviation requirements of the technical specifications had been met.

At 2,260 feet the 10-inch casing could no longer be advanced. At this depth the hammer bit could no longer be used due to hydraulic resistance from significant groundwater entering the well through fractures in the unit formation. ADT continued to advance the borehole with a 9 7/8-inch tricone bit to a total depth of 2,908 feet on August 18, 2005.

During the drilling process many items took place that are worthy of mentioning. At a depth of 2,030 feet, ADT estimated the groundwater discharge at 15 to 20 gallons per minute (gpm). HSI recorded the water temperature at 65° Fahrenheit (F). After encountering many fractures between 1,840 and 2,100 feet, ADT air lifted the well at 2,100 feet estimating the flow at 200 gpm. This was based on 150 gpm being pumped from the mud pit, and significant water overflowing from the mud pit even during pumping. At 2,220 feet this same observation was noticed even with advancement of the 10-inch casing. *Photo 7* shows groundwater unexpectedly unloading from the well when trying to make a pipe connection to continue drilling. This groundwater unloading event continued for five minutes. At 2,260 feet the downhole hammer became inoperable because of increased hydraulic resistance as groundwater was released from fractures into the well. At this depth ADT added another compressor, but the downhole hammer could still not be used and was replaced with a tricone bit. At 2,430 feet HSI recorded the groundwater temperature at 59° F possibly indicating an additional source of groundwater entering the well. It should be noted that the water temperature measured at Deep Well 3 is 65° F. As drilling continued, groundwater from the well became increasingly forceful at the cyclone discharge point (*Photo 8*). At 2,820 feet ADT did not have enough compressor air to bring the drill cuttings to the surface. For this reason ADT contracted with the Weatherford Company to supply an additional air compressor and booster system. *Photo 9* shows the additional air system

used to finish drilling Deep Well 4. Drilling continued to 2,908 where the tricone bit stuck in a fracture. At this depth it was decided to terminate drilling of the borehole. ADT positioned the drill pipe at 2,880 feet to air lift groundwater from the bottom of the well with flow estimated at 300 gpm at the surface discharge pipe. The drill pipe was then raised inside the 10-inch casing to 2,100 feet below the ground surface and air lifted for three hours with groundwater flow estimated in excess of 200 gpm. It is significant to note that ADT did not use foam or polymers to air lift groundwater from 2,880 and 2,100 feet. Flow during the air lift was constant with no surging. HSI measured the groundwater temperature at 55° F, possibly alluding to groundwater from yet another source. After eventual removal of the drill pipe, one of the cones on the tricone bit had been pulled from the bit most likely from the fracture encountered at 2,908 feet (*Photo 10*).

8.2 Sample Collection and Logging

ADT collected cutting samples at 5-foot intervals from the land surface to 2,908 feet. ADT arranged the samples in 100-foot groupings on the ground and HSI placed one set of samples in plastic trays, and another set in cloth sample bags for later analysis by the USGS (*Photo 11*). Difficult drilling conditions limited the number and type of geophysical tools that could be used in the borehole. Southwest Exploration Services, LLC collected gamma and neutron logs from the land surface to 2,450 feet in both cased and uncased sections of the borehole. The resistivity logging tool could only be used from 2,260 to 2,450 feet in the saturated and uncased portion of the borehole. Because of offsets in the open borehole, the logging tools could not safely be lowered beyond 2,450 feet.

8.2.1 Lithologic and Geophysical Logging

HSI used the cutting samples and geophysical logs (at available logging intervals) to identify the stratigraphic sequence penetrated by Deep Well 4. The sedimentary units, from top to bottom, are provided according to depth below ground surface. The basalt flows and interbedded alluvium are encountered from the land surface to a depth of 270 feet and rest directly on the Kaibab Formation. The Kaibab Formation is found from 270 to 580 feet. The cuttings show mostly light yellow sandy carbonate and gray chert from 270 to 715 feet. There is a slight change in the wavelength of the deflections on the gamma log beginning at about 580 feet. This corresponds to a very subtle character change in the cuttings visible only on site

during drilling. It is possible that the interval from 580 to 715 feet represents the Toroweap Formation, but the data are not conclusive. Fine- to coarse-grained moderately well sorted quartz sandstone between 715 and 1,450 represents the Coconino Sandstone. Some zones within this unit react moderately to strongly in dilute hydrochloric acid (HCL) and indicate that some of the cement is calcite. The lower contact is somewhat gradation, and is represented by a color change from light tan to reddish brown downward over an interval of at least 10 feet. From about 1,450 feet to the bottom of the borehole at 2,908 feet the cutting samples are rather homogeneous fine- to medium-grained reddish brown sand. Although other logs in the area record the Schnebly Hill Formation between the Coconino Sandstone and underlying Supai Group, the Schnebly Hill Formation could not be distinguished from the samples collected from Deep Well 4. The interval from 1,450 to 2,908 feet is interpreted to be the upper and middle parts of the Supai Formation. No clay is represented in the samples collected in this interval. Since the lower part of the Supai Formation exposed not far to the south along the Mogollon Rim commonly contains clay, it is probably safe to assume that this borehole has not penetrated the lower part of the Supai Formation. The samples collected at 2,908 feet did not indicate penetration of the underlying Redwall Limestone. The lithologic and geophysical logs are shown on *Figure 20*. A detailed copy of the lithologic log is supplied in *Appendix F*.

As a visual aide to understand the total depth and sedimentary units penetrated by Deep Well 4, *Figure 21* is a photograph taken from Grand Canyon National Park. The drill rig would be positioned approximately 270 feet above the Kaibab Formation with the borehole terminating just above the Redwall Limestone. As noted on *Figure 21*, the Hermit Shale is absent from the sedimentary sequence in the Bellemont area.

8.2.2 CSAMT Comparison with Lithologic Changes

The CSAMT data shown on *Figure 10* could not be used in of itself to identify the sedimentary rock sequence penetrated by Deep Well 4. Changes observed from the CSAMT ohm-meter contour values at depth, however, did indicate some changes in the sedimentary sequence, which correlated closely with the drill cutting sample interpretations for Deep Well 4. The CSAMT plot indicated the change between the overlaying predominantly fine-grained material and underlying basalt at 145 feet. Changes in the data contours at 580 feet and 725 feet correlate with the contacts between the Kaibab Formation and Toroweap Formation and

underlying Coconino Sandstone, respectively. The contour change between the Coconino Sandstone and underlaying Supai Group is estimated at 1,395 feet on the CSAMT plot which differs from the lithologic log by over 50 feet. Lithologic changes could not be distinguished from the CSAMT data to identify the Upper, Middle, and Lower Formations within the Supai Group. The CSAMT did show closely spaced and near vertical contour lines beginning at approximately 1,800 feet to the entire depth of the well at 2,908 feet. This close line spacing is attributed to fracture conditions within the sedimentary sequence as encountered during drilling after a depth of 1,800 feet.

8.3 Slotted Casing Installation and Well Completion

The conceptual well design for Deep Well 4 is shown on *Figure 19*. As mentioned earlier, the 10-inch steel casing terminated at 2,260 feet. ADT perforated the 10-inch casing from 2,080 to 2,150 feet. For the completion of the well, ADT will set 8-inch slotted casing from 2,270 to 2,450 feet, followed by 6-inch casing from 2,450 to 2,900 feet. The slot size for the 8-inch and 6-inch casing strings is 2 1/2 X 1/16-inch. The 8-inch casing has 4 rows of slots with 9 cuts per round totaling 36 slots per foot (*Photo 12*). The 6-inch casing has 4 rows of slots with 8 slots per round totaling 32 cuts per foot (*Photo 13*). Deep Well 4 is not equipped with a gravel pack.

8.4 Well Development

Well development at Deep Well 4 consisted of airlifting groundwater to the surface with air supplied from the drilling equipment and later with a submersible test pump. The development process allows loose sediment to be removed from the well. Hydraulic energy created during development helps to remove fine sediments from the penetrated units and fractured portions of the well. Observations from the well development process also helped HSI to estimate the size of the test pump for subsequent aquifer testing.

8.4.1 Air Lift Development

It is estimated that ADT first encountered groundwater in Deep Well 4 at 1,840 feet. Continued noticeable flow, however occurred at 2,000 feet with groundwater flow estimated at 20 gpm. As borehole drilling and the 10-inch casing advanced, ADT used foam and polymers to air lift groundwater from the well. During open hole drilling from 2,260 to 2,908 feet, air lifted

groundwater from the well remained relatively constant at the cyclone discharge. Diminished flows were experienced deeper in the well as more of the borehole was exposed where groundwater was being pushed back into the formation by increased use of air.

At 2,908 feet ADT terminated drilling due to increased fracture conditions and limitations of the drilling equipment. At this point the drill bit was raised and held at 2,880 feet to air lift groundwater from the well, commencing drill rig development. Groundwater was discharged at the surface for four hours. ADT discontinued the use of foam and polymers for well development. Discharge at the surface lasted four hours showing a continuous flow with no surging or reduction in groundwater flow. The flow was estimated at over 300 gpm. The drill pipe was then raised and held at 2,100 feet simulating pumping from the target area for setting of the test pump. Air lifting at this setting lasted for three hours with continuous flow and no surging of the well. Groundwater flow was estimated conservatively at over 200 gpm. *Photo 14* shows the air lifting discharge of groundwater from 2,100 feet. It should be noted, that due to the drill pipe in the well, a sounder could not be used to check water levels during air lifting activities.

Airlifting at Deep Well 4 differed significantly when compared with Deep Well 3. At Deep Well 3 foam and polymers were required to air lift groundwater to the surface. During that development process, it would take from 15 to 20 minutes to lift groundwater to the surface. The discharge at the surface only lasted from 5 to 10 minutes and then the well would need to recover. In contrast, groundwater from Deep Well 4 did not require the use of foam and polymers and the discharge was continuous without interruption or surging.

8.4.2 Pump Development

Utility Source, LLC contracted Laveen Pump Company (Laveen) of Goodyear, Arizona to perform pump development and aquifer testing of Deep Well 4. Initial pump development started on September 21, 2005 for two days. Development had to be temporarily discontinued, however, due to very fine sand damaging the pump bearings at an unexpectedly accelerated rate. Laveen removed the pump from the well and sent it back to Colorado to be rebuilt by the manufacturer and equipped with high corrosion sand resistant bearings. On October 10 Laveen reinstalled the test pump in Deep Well 4 where development occurred as a series of progressively increasing steps beginning on October 11 and lasting until October 14 for a total of

35.4 hours. Pump development started at the low rate of 150 gpm increasing to over 350 gpm. HSI collected measurements at 30-minute intervals each day of development which included: flow in gpm, total gallons, drawdown, sand content, and hertz. Development consisted of pumping the well at a constant rate until the water became clear. HSI recorded the sand content with a Rossum centrifugal sand sampler over 30-minute intervals with the results converted from milliliters sand per milliliters water to parts per million (ppm). The graduated cylinder from the Rossum sand sampler is shown on *Photo 15*. As sand levels decreased, Laveen increased the flow rate from the well. This method of development appeared more suitable than surging to remove fine material from the well. *Table 5* provides a summary of well development, with additional daily details provided on the development data sheets in *Appendix G*. HSI used information collected from well development to plan the pumping rate increases for subsequent step testing of the well.

9.0 AQUIFER TESTING

Since January 2004, various field programs conducted in Bellemont have gradually provided information leading to a better understanding of the regional aquifer and particularly groundwater flow under fractured rock conditions. Aquifer testing of Deep Well 3 in June 2004 provided information relative to groundwater production from the northeast trending Bellemont fault. In October 2005, HSI conducted a 7-day aquifer test at Deep Well 4 which is located on a northwest trending unnamed fault. The aquifer test at Deep Well 4 had a two-fold purpose of providing data for estimating the hydraulic properties of the site and possible impacts resulting from increased pumping of the regional aquifer to meet the future groundwater demands of the developing community.

Over the course of several months Utility Source, LLC and HSI discussed various time frames for the actual length of the aquifer test to be conducted at Deep Well 4. It was necessary to stress the aquifer over a sufficient time period to develop an understanding of the flow system from which water resources could adequately be evaluated and later developed. After review and consideration given to the area geology and water production estimates for Deep Well 4, HSI recommended that a 7-day aquifer test would best meet the needs of the project and assist ADWR with their technical review as part of the PAD process.

The subsequent sections provide details of how HSI conducted aquifer testing including: testing equipment, aquifer testing procedures, and data analysis. At the end of this section, a comparison will be presented between aquifer testing results obtained from Deep Well 3 and Deep Well 4 in addition to a discussion on the nearby City of Flagstaff Woody Mountain well field. Graphs illustrating drawdown and recovery data are provided in addition to photo documentation, and supporting data appendices.

9.1 Testing Equipment

Before discussing details of aquifer testing at Deep Well 4 it will be helpful to understand the types of equipment and measuring devices used to conduct testing and collect data. Equipment referenced in the following paragraphs remained the same during well development and aquifer testing activities. Laveen operated and maintained all pumping equipment and HSI verified and collected all data from the various measuring devices.

9.1.1 Pumping Equipment

Pumping equipment for aquifer testing at Deep Well 4 consisted of a diesel generator supplying power to a Centrilift variable frequency drive (VFD) which controlled a 400 horsepower submersible pump. The Centrilift pump is shown on *Photo 16* prior to installation in Deep Well 4. Laveen set the pump intake at a depth of 1,963 feet approximately 117 feet above the perforations in the 10-inch well casing. The VFD (*Photo 17*) is an integral part of the pumping equipment where the speed of the pump is controlled by increasing or decreasing the operating frequency of the pump motor. In this manner, the VFD allows adjustments to be made in frequency, expressed in hertz (Hz), which controls the speed of the pump and the resulting flow in gallons per minute. An adjustment in Hz, relates to changes in groundwater flow from the well at the surface. Laveen attached the pump motor to 4-inch column piping which transitioned to 6-inch discharge piping at the ground surface. Flow from the well was directed to a nearby wash approximately 100 feet from Deep Well 4. The Laveen pump crew provided bank protection to the side of the wash as an erosion preventative measure during all discharge testing. A representative from Centrilift assisted Laveen with setup and calibration of the installed equipment.

9.1.2 Flow Measurement

An in-line propeller flow meter equipped with a dial gage, and totalizer meter provided discharge measurements at Deep Well 4 (*Photo 18*). Operation of the flow meter required maintaining a full and constant flow of water through the discharge pipe. To maintain a full pipe, the gate valve on the downstream end of the discharge line was adjusted to provide back pressure on the system ranging between 18 and 20 pounds per square inch (psi). The totalizer meter recorded the total volume of water passing through the meter in thousands of gallons. HSI recorded the totalizer numbers at 30-minute intervals throughout all well development and aquifer testing activities. This information allowed calculation of an average flow rate passing the totalizer (i.e. the number of gallons per time interval) which could be compared with the dial gage recording instantaneous flow in gpm and later readings obtained from the orifice plate and manometer installed at the end of the discharge pipe.

Laveen selected the in-line flow meter based on its ability to be connected directly to the VFD control panel. This arrangement allowed all flow to be controlled from the VFD without

having to adjust flow from the discharge gate valve. In essence, with the line pressure set between 18 and 20 psi, flow adjustments could be made from the menu based operation on the VFD control panel. The Centrilift representative calibrated flow between the flow meter and VFD during well development. As well development continued, however, a slight discrepancy between the VFD and flow meter totalizer existed. The VFD recorded a lower gpm value when compared with the flow meter totalizer. Contact with the Centrilift representative verified that the flow meter totalizer contained the more accurate flow measurement. HSI used the totalizer numbers to estimate the discharge rate for all subsequent aquifer testing.

Another flow measurement device for aquifer testing included an orifice plate and attendant manometer installed at the end of the discharge pipe (*Photo 19*). This is a fairly simple arrangement where a 4-inch orifice plate is attached to the end of the 6-inch discharge pipe. A manometer is then positioned and attached to a small port opening approximately 12-inches from the end of the 6-inch diameter discharge pipe. The manometer measures the energy or "head" at a discrete location along the length of the discharge pipe. The head measurement is a unit of length, noted as the rise of water level above the manometer intake, as seen in a transparent plastic tube. If the diameter of the discharge pipe and the area of the opening of the orifice plate placed on the end of the discharge pipe are known, the head measurement made at the manometer can be converted into a measurement of discharge (flow) from the open area of the orifice plate. Given the size of the discharge pipe, orifice plate, and the pressure head in inches from the manometer, the flow is then estimated from a reference chart for circular orifices in gpm. The manometer measurements recorded during the 7-day aquifer test ranged from 369 to 374 gpm.

It should be noted, however, that during well development, step testing, and part of the constant rate testing, air in the discharge hindered readings from the manometer. During parts of the constant rate test, less air was noticed in the discharge and the manometer readings correlated directly with calculations from the flow meter totalizer. The totalizer indicated flow during the constant rate test at 371 gpm and the manometer showed flow from 369 to 374 gpm.

9.1.3 Water Level Measurement

Water level measurements collected from Deep Well 4 included use of electric sounders, geophysical logging tools, and pressure transducers. Application of these measurement devices are discussed below pertaining to water level data collected and aquifer testing.

Electric Sounder and Geophysical Logging Tools: HSI used an electric sounder to measure the depth to groundwater in Deep Well 4 on August 3, 2005 at 1,683 feet before the completion of well drilling. On August 19, Southwest Exploration Services measured the depth to groundwater with their resistivity tool at 1,675 feet after completion of drilling. HSI measured the depth to groundwater using an electric sounder, prior to the first attempt at well development, on September 21 at 1,697 feet. Another measurement taken on October 11, prior to additional well development, indicated the depth to groundwater using an electric sounder at 1,692 feet. Because of the slight differences in the depth to water measurements, HSI has used the depth measurement of 1,675 feet collected from geophysical logging on the figures and tables referenced in this PAD. This corresponds to a groundwater elevation of 5,485 feet above msl.

Pressure Transducers: Two sounding tubes provided a means to measure the change in groundwater level at Deep Well 4 (*Photo 20*). Laveen installed a Dynotek Slimline 500 psi water level transducer in one of the sounding tubes at a depth of 1,943 feet. This transducer proved advantageous being connected directly to the VFD, providing instantaneous water level measurements on the control panel digital display. This arrangement also worked as a fail safe device to protect the pump by automatically shutting down the equipment in the case of excessive water level drawdown. Information retrieved from the VFD prior to initiating well development showed submergence of the transducer below groundwater at 242.8 feet. This corresponds to a depth to water of approximately 1,700 feet below ground surface. This transducer logged water level change at 2.5-foot intervals and 1-minute time increments during all testing. Recording of water levels at 2.5 feet is due to the limited sensitivity of the 500 psi transducer. Instead of using the electric sounder to record water levels during testing, HSI recorded the water levels shown of the VFD digital display. These measurements are included as *Appendix H*. This information was later verified by data recorded as part of the data logging capabilities of the Slimline transducer.

In the second sounding tube of Deep Well 4, HSI set an In-Situ Mini-Troll 300 psi transducer at a depth of 1,943 feet. This Mini-Troll transducer is a self contained data logger which cannot be downloaded until the device is physically removed from the well at the completion of testing. Programming of this transducer, allowed the water level change to be measured to less than one foot increments when compared with the Slimline transducer set in the other sounding tube measuring at 2.5-foot increments. All data included in the text of this PAD reflect measurements recorded with the Mini-Troll transducer and data logger. An additional Mini-Troll transducer was also set in Deep Well 3 to record possible pumping impacts created by well development and testing at Deep Well 4.

9.2 Aquifer Testing

All aquifer testing and data collection was performed under the direction of HSI personnel. Data collected during aquifer testing of Deep Well 4 are summarized on *Graph 1* and *Graph 2* indicating drawdown and specific capacity, respectively. This information was retrieved from the Mini-Troll data logger. Data collected from the VFD control panel, at 30-minute intervals, are supplied in *Appendix H.* When viewing the data plots for the first two steps (lower pumping rates), the data appears to be somewhat scattered. This can be attributed to the influence of air in the groundwater most likely resulting from the drilling operation. The last two steps show a diminished affect from air in the groundwater. At the end of each step test, full recovery of the water levels took place. This was determined from the water level recorded on the VFD control panel digital display at 242.8 feet (column of water above the transducer). This water level agrees with the water level recorded on the VFD prior to well development and aquifer testing as noted in *Section 9.1.3.*

9.2.1 Step Testing

After well development HSI conducted a series of step drawdown and recovery tests at Deep Well 4 prior to initiating the 7-day aquifer test. The first two steps lasted 8-hours each having a different discharge rate, with water level recovery taking place overnight. A third step was added in the process of changing a generator at the site. Information gained from step testing allowed HSI to determine the optimum pumping rate for the 7-day aquifer test.

Step 1: The first step test started at 0730 and finished at 1530 in the afternoon on October 19, 2005 lasting 8-hours (480 minutes). Step 1 sustained a pumping rate of 186 gpm having a total drawdown of 44.7 feet and ending specific capacity of 4.16 gpm/ft of drawdown. The total groundwater pumped from the well during Step 1 amounted to 89,200 gallons. The water temperature was recorded at 59° F with the sand content at less than 1 ppm. Full recovery of the groundwater level took place when checked in the morning on the VFD control panel prior to starting the next step. Drawdown and recovery transducer measurements for Step 1 are shown on *Graph 3*.

Step 2: The second step test started at 0700 and finished at 1500 in the afternoon on October 20, 2005 lasting 8-hours (480 minutes). Step 2 sustained a pumping rate of 260 gpm having a total drawdown of 77.2 feet and ending specific capacity of 3.37 gpm/ft of drawdown. The total groundwater pumped from the well during Step 2 amounted to 127,600 gallons. The sand content was less than 1 ppm. Approximately 10-minutes after shutting the pump down, HSI needed to remove the Mini-Troll transducer from Deep Well 4 to download the data to extend the life of the memory for additional data collection. The transducer was reset and continued to record water level measurements at 1630 hours. Full recovery of the groundwater level took place when checked in the morning on the VFD digital display prior to starting the next step. Drawdown and recovery transducer measurements for Step 2 are shown on *Graph 4*.

Step 3: The third step first started out as a constant rate test at 346 gpm. Approximately 27.5 hours into the test, however, a problem occurred with the generator indicating low voltage on the VFD control panel. After six hours of down time, the test was restarted until 12 hours later another problem developed with the generator. At this point HSI decided to terminate the test and use the first 27.5 hours (1,650 minutes) of data as a third step test. The well sustained a pumping rate of 346 gpm having a total drawdown of 123.1 feet and ending specific capacity of 2.81 gpm/ft of drawdown. The total groundwater pumped from the well During Step 3 amounted to 570,000 gallons. The sand content was less than 1 ppm. Full recovery of the groundwater level took place when checked in the morning on the VFD digital display prior to starting the constant rate test. Information from this Step 3 helped to determine the optimum pumping rate for the constant rate test. Drawdown and recovery transducer measurements for Step 3 are shown on *Graph 5*.

9.2.2 Constant Rate Testing

The constant rate aquifer test at Deep Well 4 started at 0700 on October 27, 2005 and ended at 0700 on November 1 consisting of seven days (10,080 minutes) of uninterrupted groundwater discharge. In addition to data collected from the two transducers and data loggers installed in the well, HSI monitored and recorded water level change, flow measurements, and sand content every 30-minutes on the daily field sheets (*Appendix H*). The well sustained a pumping rate of 371 gpm with 145.2 total feet of drawdown and an ending specific capacity of 2.56 gpm/ft of drawdown. Groundwater pumped during the 7-day test amounted to 3,740,400 gallons or 11.48 acre-feet. Prior to terminating the test, HSI collected groundwater samples on October 31 for new source analysis processed by Del Mar Analytical in Phoenix, Arizona. The University of Arizona performed the stable isotope and tritium analysis on the groundwater samples. On November 4, approximately 3.25 days after ending the aquifer test, the Mini-Troll data logging equipment was removed from the well. At this time, full recovery had not taken place. Data from the VFD digital display indicated that the well had recovered to within 94.8 percent of the original static water level. Before removal of the Slimline data logger on November 7, data from the VFD digital display showed that the groundwater level in Deep Well 4 had recovered to within 96.5 percent of the original static water level prior to well development and aquifer testing. *Graph 6* is the data plot of groundwater level measurements recorded by the Mini-Troll data logger illustrating drawdown and recovery at Deep Well 4. This graph shows how rapidly water levels in Deep Well 4 responded and stabilized to the aquifer testing activities.

9.3 Data Analysis

In order to estimate the aquifer parameters of an area it is necessary to perform some type of empirical testing, where flow rates and water levels from a well are closely monitored over an adequate period of time to have effectively stressed the aquifer. Two primary aquifer parameters that are estimated from aquifer testing results include the transmissivity and storage coefficient. Transmissivity is normally represented in terms of gallons per day per foot (gpd/ft) and refers to the rate at which water is transmitted through a unit width of the entire thickness of an aquifer, under a unit hydraulic gradient. The storage coefficient represents the amount of water released from storage within one cubic foot of porous material due to a one-foot decline in overall head.

Normally represented as a percent by volume, the storage coefficient is a numerical demonstration of how much water can be retrieved from a known volume of the aquifer.

When estimating the transmissive and storage parameters from aquifer testing, there are certain limitations of the analytical equations requiring data from a pumping well and observation well(s). Transmissivity can be estimated using data collected from the pumping well. Estimating a storage value, however, requires data collected from an appropriately distanced observation well. Testing conducted at Deep Well 4 did not have the advantage of data collected from a nearby observation well. Consequently, only values for transmissivity could be estimated and storage could not be determined from the aquifer testing data.

Drawdown experienced in Deep Well 4 is shown on *Graph 7* which is a semi-logarithmic plot of the transducer data. As illustrated, drawdown maintains a downward trend for approximately 1,000 minutes, then stabilizes at a noticeable incremental rate for the remainder of the test at 10,080 minutes. Considering the single well availability and drawdown characteristics of the data shown on *Graph 7*, HSI analyzed the time-drawdown data according to the Jacob-Cooper approximation solution method. Based on 11 feet of drawdown, over one logarithmic cycle, the transmissivity is estimated at 8,904 gpd/ft. *Graph 8* is the recovery semi-logarithmic data plot for 3.25 days of transducer measurements. The Theis recovery analysis was used to estimate the transmissivity from the recovery (residual drawdown) data measured in Deep Well 4. Residual drawdown from *Graph 8* is estimated at 11 feet, over one logarithmic cycle, where the transmissivity is estimated at 8,904 gpd/ft. The drawdown and recovery data are complementary to each appearing as mirror images.

As a means to assess the pumping impact of each of the existing deep wells on each other, HSI installed a Mini-Troll transducer and data logger in Deep Well 3 on June 10, 2005. The intent was to observe the groundwater fluctuations associated with pumping the deep wells in the general area and to determine if pumping of Deep Well 4 had any observable impact on Deep Well 3.

Since Deep Well 3 acted as the common measuring point, the locations of all the other wells are in reference to its location. Deep Well 4 is located approximately 6,600 feet southeast of Deep Well 3. Deep Well 2 and Deep Well 1 are located approximately 300 feet southeast and 1,000 feet east of Deep Well 3, respectively (*Figure 8*).

The normal deep well operational scheme used by Utility Source, LLC personnel is to operate Deep Well 1 as much as possible followed by the operation of Deep Well 2. Presently, the only time that Deep Well 3 is operated is when large volumes of water are needed in a short amount of time. Utility Source, LLC provided operational records from June 10 through November 4, 2005 to allow a better understand of the observed groundwater fluctuations for this same period of time which included drilling, development, and aquifer testing activities at Deep Well 4.

Graph 9 is a water level hydrograph from Deep Well 3 collected over the five month period, from June 10 through November 4, 2005. The Utility Source, LLC records indicated that Deep Well 1 operated continually over this five month period where any possible impacts to Deep Well 3 are consistent over the entire five months of record.

Graph 9 more readily displays the visual impacts of the starting and stopping of Deep Well 2 and Deep Well 3. The most apparent groundwater fluctuation occurs during the operation of Deep Well 3 on June 14, July 15, and August 26 where the water level drops several feet during pumping and then quickly recovers when the pump is shut off.

Less apparent are the water level fluctuations that occur when Deep Well 2 was stopped as shown on June 10, August 12, and October 13. This well was generally operated for long periods of time like Deep Well 1. The short periods of time when Deep Well 2 was not operating reflects the water level rise of approximately 3 to 4 feet. Therefore, it appears that over periods of long term pumping, Deep Well 2 has only a slight drawdown effect on Deep Well 3. Note again that Deep Well 2 is the well closest to Deep Well 3, where only 300 feet separates the two wells.

Graph 9 also shows the time frame where step testing and aquifer testing were performed at Deep 4. No impact was observed in Deep Well 3 from this testing.

When evaluating the aquifer test data from Deep Well 4 it is also worth discussing the specific capacity data observed at the close of aquifer testing. The specific capacity is simply a ratio of the rate of production, in gpm, that can be produced from a well for every foot of drawdown, in feet. This ratio is not an absolute number but an estimate of a wells' performance to assist with sizing permanent pumping equipment. The 7-day aquifer test indicated that Deep Well 4 could sustain a pumping rate of 371 gpm with only 145.2 feet of drawdown. In

consideration of the specific capacity of 2.56 gpm/ft of drawdown estimated from aquifer testing, Deep Well 4 could have produced additional groundwater but was limited by the size of the test pumping equipment. The pump manufacturer indicated to HSI that the pump was operating on the edge of its designed performance curve for the aquifer test. Higher pumping rates could be achieved from Deep Well 4 by increasing the horsepower of the pump and lowering its setting in the well. For example, in theory, if a higher capacity pump was set in Deep Well 4 at depth of 2,200 feet with the static water level at 1,700 feet, there would be a 500 foot groundwater column above the pump. Using a specific capacity of 2.00 and pumping rate of 600 gpm, it is estimated that 300 feet of drawdown would result. This would leave approximately 200 feet of submergence for the pumping equipment. This is a theoretical yet conservative estimate of well yield which only additional aquifer testing could validate.

9.4 Deep Well 3 and Deep Well 4 Comparison

At this place in the PAD it would be helpful to compare results from aquifer testing of Deep Well 3 and Deep Well 4 with other information in the Flagstaff area. Some of the basic data from testing of the two deep wells is summarized below:

Parameter	Deep Well 3	Deep Well 4
Discharge	72 gpm	371 gpm
Drawdown	542.8 feet	145.2 feet
Specific Capacity	0.13 gpm/ft of drawdown	2.56 gpm/ft of drawdown
Transmissivity	400 gpd/ft	8,904 gpd/ft
Static Water	1,606 feet	1,675 feet
Fault	Bellemont	Unnamed
Strike	N 30° E (30°)	N 30° W (330°)
Water Temperature	65° F	59° F and 55° F

In consideration of the apparent differences between Deep Well 3 and Deep Well 4, when compared with water production capabilities of Deep Well 1 (11 gpm) and Deep Well 2 (23 gpm), it can be postulated that groundwater production in the area can be directly related to faulting and characteristics of the underlying sedimentary units. According to the initial CSAMT survey within the USSA, both Deep Well 1 and Deep Well 2 did not penetrate extensively fractured material but instead relatively low conductive sedimentary units. As shown on *Figure 7*, there are two major subsurface structural features in the area. One structure is the Bellemont fault (northeast trending) from which Deep Well 3 produces groundwater. The other structure is

the unnamed fault (northwest trending) where Deep Well 4 accesses groundwater. Bills, and others (2000) observed in the Flagstaff area (Bellemont is included at the western edge of the study area) that northeast trending structures characteristically produce less groundwater when compared with the generally higher-producing wells located on northwest trending structures. Their interpretation is based on the USGS review of information from lithologic descriptions, downhole geophysical logging, and aquifer testing of wells in the greater Flagstaff area. The USGS and other researchers offered an explanation relative to the tectonic origin of the faults. Northeast-and north-trending faults in Paleozoic and Tertiary deposits may be extensional reactivations of deep-seated older (Precambrian) faults that are thought to have formed mostly by thrusting and compression. Typically, faults originating from compressional stress are fairly tight and closed allowing relatively reduced groundwater flow. The northeast trending Bellemont fault may be a reactivation of an older Precambrian fault but without more information about the nature of the underlying basement materials this interpretation is uncertain.

The lithologic logs from Deep Well 2 and Deep Well 3 indicate vertical displacement of the Kaibab Limestone by almost 500 feet at the base of this unit. The base of the basalt is offset between the two wells by almost 200 feet. This indicates 300 feet of offset occurred on the Bellemont fault prior to eruption of the basalts, and 200 feet of offset has occurred since the first basalt flow was deposited. This shows that the Bellemont fault was active prior to volcanism, at least in the immediate Bellemont area. The linear distance separating Deep Well 2 (up-thrown side of fault) and Deep Well 3 (down-thrown side of fault) is only 300 feet.

Most northwest trending faults in Arizona have a tensional origin. Under this tectonic regime, the underlying rock units generally allow greater groundwater production due to the more open nature of the tensional stress on the fault (Bills, et al., 2000). Data from lithologic and downhole geophysical logging data collected from Deep Well 4 could not be used to estimate the tectonic origin of the unnamed fault. No other known wells in the area have been drilled in close proximity to this fault to use as a basis for comparison.

9.5 Woody Mountain Well Field

The City of Flagstaff is the largest city in northern Arizona located approximately ten miles east of Bellemont. The population of Flagstaff is estimated at close to 65,000 based on projections from a private consulting firm, Arizona Department of Economic Security, and City

Planning (City of Flagstaff, 2005). Water provided for the needs of the Flagstaff community for the year 2004 amounted to 8,249 acre-feet from a variety of water resources available to the City including: Lake Mary (surface), Inner Basin Spring, Inner Basin Wells, Woody Mountain Wells, Lake Mary Wells, and Local Wells. Based on the total water served in 2004 it is estimated from the Flagstaff Utility Department records that approximately 3,626 acre-feet of the demand was met by groundwater pumped from 10 operational wells in the Woody Mountain well field approximately 8 miles southeast of Bellemont. In consideration of the total Flagstaff demand for 2004, it is estimated that groundwater from the Woody Mountain wells accounted for almost 44 percent of the water resource supply. The demand on the Woody Mountain wells is dependant, however, on "wet years" and "dry years" where a wet year is considered when Lake Mary has 65 percent or more of its full capacity. The year 2004-05 are considered as wet years (City of Flagstaff, 2005). With this in mind, the demand on the Woody Mountain wells could be significantly greater than the 44 percent experienced in the year 2004 during dry years.

The Woody Mountain wells access groundwater from the productive north end of the Oak Creek Canyon Fault (Bills, et al., 2000). Some of these wells have a water production history dating back to the mid 1950's. Pumping rates for the Woody Mountain wells range from 200 to 581 gpm, averaging 371 gpm. The specific capacity ranges from 0.85 to 6.03 gpm/ft of drawdown, averaging 2.64 gpm/ft of drawdown (City of Flagstaff, 2005). When comparing the Woody Mountain wells with aquifer testing data from Deep Well 4, based on the tested pumping rate at 371 gpm, Deep Well 4 would rank number 5 (of 11 total operational wells) as one of the higher producing wells. Applying this same comparison with the specific capacity of 2.56 gpm/ft of drawdown, Deep Well 4 would rank as number 4 of the better performing wells.

The USGS has reviewed water level data from the Woody Mountain wells, with some records dating back to the mid 1950's. Their report notes that several tens of feet of water level decline have been experienced in the last 20 to 40 years (Bills et al., 2000). The City of Flagstaff has maintained a database of the Woody Mountain wells. These records indicate that four of the wells were drilled with the initial static water level recorded from 1954 to 1957. Data supplied in *Appendix I* shows that water level change ranges from 18 to 65 feet from the first recorded water levels to measurements collected in 2004 for WM #1, WM #2, WM #3, and WM #4. This represents water level change for almost 50 years in a major well field with decline rates ranging from 0.36 to 1.38 feet per year. These wells are in close proximity to each other (within 3,000

feet) with pumping rates from 250 to 575 gpm. The wells drilled from 1963 to 1997 show water level changes from 10 to 85 feet (COF, 2005).

9.6 Water Chemistry

The water chemistry for the study area has been evaluated using historic data from the ADWR GWSI and USGS NWIS databases in addition to groundwater samples collected from Deep Well 3 and Deep Well 4 at the completion of aquifer testing. HSI also reviewd stable isotope data from the USGS (Bills et al., 2000). Data collected from ADWR and USGS databases are provided in *Appendix J.* A summary of the water chemistry from Deep Well 3 and Deep Well 4 is provided in *Table 6.*

All of the wells in the study area, penetrating both shallow and deep aquifers, have a very high quality of groundwater with low dissolved solids less than 300 milligrams per liter (mg/L) or specific conductance of less than 480 mg/L. They also have the same general chemistry, characterized as calcium bicarbonate. This is common in waters that are close to the source of recharge and/or are derived from fractured hard-rock aquifers with fewer weathered surfaces than encountered in alluvial basins, where there typically occurs a greater geochemical evolution of the water through water-rock interactions. Also, most of the water samples have had temperatures that range from 48° to 63° F (9° to 17° Celsius), which excludes geothermal activity that can significantly alter the water chemistry.

A general chemical comparison of the groundwater samples collected from Deep Well 3 and Deep Well 4 indicates they are very similar, even though they are receiving groundwater from different fracture systems. Both have a total dissolved solids (TDS) concentration of 100 to 120 mg/L with similar major ionic chemistry and no maximum contaminant level (MCL) exceedances for inorganic, organic, microbiological, or radiological parameters (*Table 6*).

Stable isotope testing for oxygen-18/oxygen-16 and deuterium/protium ratios indicate both Deep Well 3 and Deep Well 4 are similar in isotopic character to the other nearby wells that are accessing groundwater from the regional aquifer system, having a slightly more enriched deuterium ratio (*Figure 22*). Bills et al. (2000) stated that the small isotopic variability from both the regional and perched aquifer systems indicated a common recharge source for the study area. NAD-1(A-21-05 11ABC), as illustrated in *Figure 22* is the only sample in the area that was

discharged from perched groundwater in the volcanic rocks. Although still having an isotopic composition that indicates a similar recharge source to the wells in the regional aquifer, it also indicates some evaporation of the source water.

10.0 DRAWDOWN ANALYSIS

10.1 Model Description

A simple groundwater flow model was developed using USGS MODFLOW 2000 and Groundwater Modeling System (GMS) software. The model was developed in order to simulate the groundwater flow of the regional aquifer and subsequently superimpose the effects of groundwater pumping on water levels for a 100-year time frame. It is assumed that the current time is representative of a steady state condition, and a transient model was developed for the 100-year pumping impact analysis. The model assumes unconfined conditions. The model uses metric units, but for convenience of the reader, more traditional values follow in parentheses.

The area modeled is 40,000 hectares (154.44 square miles), encompassing just slightly more than the 4 township study area. For modeling purposes, this area was divided into a grid of 100 by 100 cells, each cell measuring 200 meters (609.6 feet) on each side. The large area was selected in order to avoid boundary effects on water levels near the Bellemont wells. *Figure 23* displays the aerial extent of the model, the grid cells, and the location of the hydrologic boundaries. The digital model files are contained in *Appendix K.*

10.2 Aquifer Parameters

Initial water level contours were developed using water level information from the Hydrogeology of the Regional Aquifer near Flagstaff, Arizona (Bills et al., 2000), and water level measurements made at the Bellemont wells. It should be noted that water levels developed over most of the model domain have no measurements with which to correlate, and are representative of an extrapolation from those water level measurements in the central and eastern portions of the model domain.

Along each of the four sides of the model, constant heads were selected as a boundary condition. The constant heads at each of the cells along the edges of the model were the same as those discussed above. The constant heads produce a constant flux into or out of the cell in order to maintain the constant water level in the cell. As part of the steady state analysis, the constant heads were replaced by constant fluxes calculated along the edges of the model. A single constant head cell remained in the northeast corner of the model for the steady state analysis.

The groundwater flux into and out of the model domain was calculated to be 17,286 cubic meters per day (5,115 acre-feet per year - afy).

No recharge or evapotranspiration was simulated as part of the model. The model is representative of the regional aquifer system. Topographic elevations represent the top of each model cell. The bottom of the model is a no flow boundary at an elevation of 900 meters amsl (2,953 feet amsl). The bottom of the model is approximately 1,300 feet below the bottom of Deep Well 4.

Hydraulic conductivity over most of the model domain is 0.031 meters per day (0.1 feet per day - ft/day). However, because faulting and fracturing in the area controls much of the groundwater flow, hydraulic conductivities along mapped faults in the area were varied. The variations of the hydraulic conductivities are proportional to calculated hydraulic conductivities for wells in the vicinity of the fault. The measured transmissivities were divided by the screened interval of the wells to determine the hydraulic conductivity at the well locations. The faulted areas act as both a conduit and impediment to groundwater flow. Values of hydraulic conductivity were varied as part of the water level calibration for the model. *Figure 24* indicates the location of the significant faults used as part of the analysis, as well as the hydraulic conductivities in their vicinity. Hydraulic conductivities range in value from 0.003 to 2.60 meters per day (0.0098 to 8.53 ft/day).

Storage coefficient values have not been collected as part of the aquifer testing at the Bellemont wells. In order to distribute a storage coefficient over the model domain, it was assumed that storage coefficients were proportional to hydraulic conductivity and that the highest storage coefficients are near the faults and decrease dramatically moving away from the faults. In order to calculate the storage coefficients, the hydraulic conductivity values in meters per day were multiplied by 0.05. The resulting storage coefficient values range from 0.00015 to 0.13.

Based on the well testing conducted by HSI and the USGS research published for the area, it is believed that the aquifer parameters placed in the MODFLOW model are representative of aquifer conditions in the region. The resulting water level elevations from the steady state analysis are presented in *Figure 25*. Note that the water levels are generally flowing from south to north. However, the presence of the varied hydraulic conductivities along the

faults in the model creates an equally varied flow regime near Bellemont. The steady state water level elevations were used as baseline conditions for the transient 100 year impact analysis.

10.3 Theoretical Drawdown Impact Analysis

Pumping wells were placed into the model at two locations. The first location is near the Deep Well 1, Deep Well 2, and Deep Well 3. This location pumps at a rate of 583 cubic meters per day (172.5 afy). The second pumping location is at Deep Well 4 and pumps at a rate of 2,022 cubic meters per day (600 afy). The model uses a single stress period broken into 10 time steps and simulates continuous pumping for 100 years. At the conclusion of the 100 year time frame, a maximum drawdown of 297 feet is calculated by the model. *Figure 26* displays the drawdown resulting from 100 years of pumping. The greatest amount of the drawdown occurs near the pumping centers and down gradient; however the entire region exhibits a response to the sustained pumping.

10.4 Actual Versus Theoretical Impact Analysis

The 100-year maximum drawdown impact of 297 feet calculated by the model represents a very conservative value of increased groundwater development estimated for the USSA based on a total production rate of 772.5 acre-feet per year. This impact estimate should be considered as a worst case scenario with no accounting for groundwater recharge. As referenced in *Section 9.5*, data from four of the Flagstaff Woody Mountain wells indicates water level declines in the regional aquifer ranging from 18 to 65 feet (0.36 to 1.38 ft/year) over a 50 year period. The production rate for these four wells for the year 2004 amounted to 1,626 acre-feet. The Woody Mountain pumping rates range from 250 to 575 gpm (COF, 2005). The estimated annual groundwater production of 772.5 acre-feet for the USSA is approximately 46 percent of the four Woody Mountain well production rates for the year 2004. In consideration of the actual decline rate of a major city well field with 50 years of record near the USSA, the impact calculated by the theoretical model should be viewed as a very conservative estimate.

11.0 CONCLUSIONS

This expanded PAD provides evidence that groundwater resources from the regional aquifer are more than adequate and available to meet the 100-year demand of the USSA. This expanded PAD is intended to support a 100-year water adequacy report to be filed with ADWR. Pursuant to Arizona Administrative Code R12-15-717B.1.e., a waiver of the Department's depth-to-static water level criteria is being sought for the physical availability to serve the subject properties, since the static water level currently exceeds the 1,200-foot depth to water criteria.

As indicated in the Elements of Supply (*Section 3.0*), and reported by the USGS (Bills, et al., 2000), structural features, that extend into the regional aquifer, were shown to have a significant effect on the occurrence and flow of groundwater in the regional aquifer. The four deep wells in the USSA drilled in the regional aquifer have sufficient capacities, totaling 478 gpm, to serve the current and committed demand for the next 100 years. Data from drilling Deep Well 4, into the unnamed fault deep within the regional aquifer, plus the data from Deep Well 1, Deep Well 2, and Deep Well 3, supports the expanded 100-year supply for the USSA. Pumping data from Deep Well 3 and Deep Well 4 and the Camp Navajo well indicate that the area faults allow significant volumes of groundwater to be accessed from the regional aquifer.

12.0 REFERENCES

Arizona Department of Water Resources (ADWR), 2004. Rural Water Resources Study Rural Water Resources 2003 Questionnaire Report: Arizona Department of Water Resources (ADWR), Phoenix, Arizona.

Arizona Department of Water Resources (ADWR), 2004a. GWSI search for T21, 22, 23N – R8 and 9E.

Arizona Department of Water Resources (ADWR), 2004b. Wells 55 Database for T21, 22, 23N – R8 and 9E.

Arizona Department of Water Resources (ADWR), 2000. Verde River Watershed Study: Arizona Department of Water Resources, Phoenix, Arizona.

Bills, D.J. and Flynn, M.E., Monroe, S.A., 2005. Preliminary Hydrogeologic Assessment of the Coconino Plateau and Adjacent Areas, Coconino and Yavapai Counties, Arizona: *in* Arizona Hydrological Society 2005 Annual Symposium.

Bills, D.J. and Flynn, M.E., 2002. Hydrogeologic Data for the Coconino Plateau and Adjacent Areas, Coconino Counties, Arizona: U.S. Geological Survey Open-File Report 02-265, Tucson, Arizona, 29 pp.

Bills, D.J., Truini, M., Flynn, M.E., Pierce, H.A., Catchings, R.D., and Rymer, M.J., 2000. Hydrogeology of the Regional Aquifer Near Flagstaff, Arizona: U.S. Geological Survey Water-Resources Investigations Report 00-4122, Tucson, Arizona, 143 pp.

Cagniard, L. 1953. Basic Theory of the Magnetotelluric Method of Geophysical Prospecting, Geophysics, 18, pp. 605-635.

City of Flagstaff, (COF) May 2005. Report to the Water Commission Year 2005 Water and Wastewater Plan: Prepared by City of Flagstaff Utilities Department, Flagstaff, Arizona, 50 pp.

Desert Research Institute (DRI), 2005. Flagstaff WSO AP, Arizona (023010) Climate Summary: Desert Research Institute, http://www.wrcc.dri.edu/cgi-bin/cliRECtM.pl?azflag.

HydroSystems, Inc. (HSI), July 2004. Physical Availability Demonstration for Flagstaff Meadows in Coconino County, Arizona: Prepared for Greenfield Land Development (consultant report).

HydroSystems, Inc. (HSI), April 2004. Property Well Site Evaluation and Surface Geophysical Survey: Prepared for Greenfield Land Development (consultant report).

McGavock, E.H., Anderson, T.W., Mooseburner, O., and Mann, L.J., 1986. Water Resources of Southern Coconino County, Arizona: Arizona Department of Water Resources Bulletin 4, Prepared by the U.S. Geological Survey, Tucson, Arizona, 53pp.

Pearthree, P.A., Vincent ,R.B., Brazier, R., and Hendricks, D.M., 1996. Plio-Quaternary Faulting and Seismic Hazard in the Flagstaff Area, Northern Arizona: Arizona Geological Survey Bulletin 200, Tucson, Arizona, 31 pp., 2 sheets, scales 1:50,000 and 100,000.

Thorestenson, D.J. and Beard, L.S., 1997. Lineament Map of Camp Navajo and Surrounding Area, North-Central Arizona: U.S. Geological Survey Open File Report 97- (unpublished, provisional), Plate 1 and Plate 2, scale 1:50,000.

Ulrich, G.E., Billingsley, G.H., Hereford, R., Wolfe, E.W., Nealey, L.D., and Sutton, R.L., 1984. Map Showing Geology, Structure, and Uranium Deposits of the Flagstaff 1 x 2 Quadrangle, Arizona: U.S Geological Survey in cooperation with the U.S. Department of Energy, Miscellaneous Investigations Series Map I-1446 (Sheet 2 of 2), scale 1:250,000.

Wilkinson, R.W., August 2000. Water Resources of Bellemont Park, Coconino County, Arizona: Master of Science Thesis Northern Arizona University, Flagstaff, Arizona.

Wolfe, E.W., Ulrich, G.E., and Newhall, C.G., 1987, Geologic Map of the Northwest Part of the San Francisco Volcanic Field, North-central Arizona: U.S. Geological Survey Miscellaneous Field Studies Map MF-1959, 86 p., 2 sheets, scale 1:50,000.

FIGURES

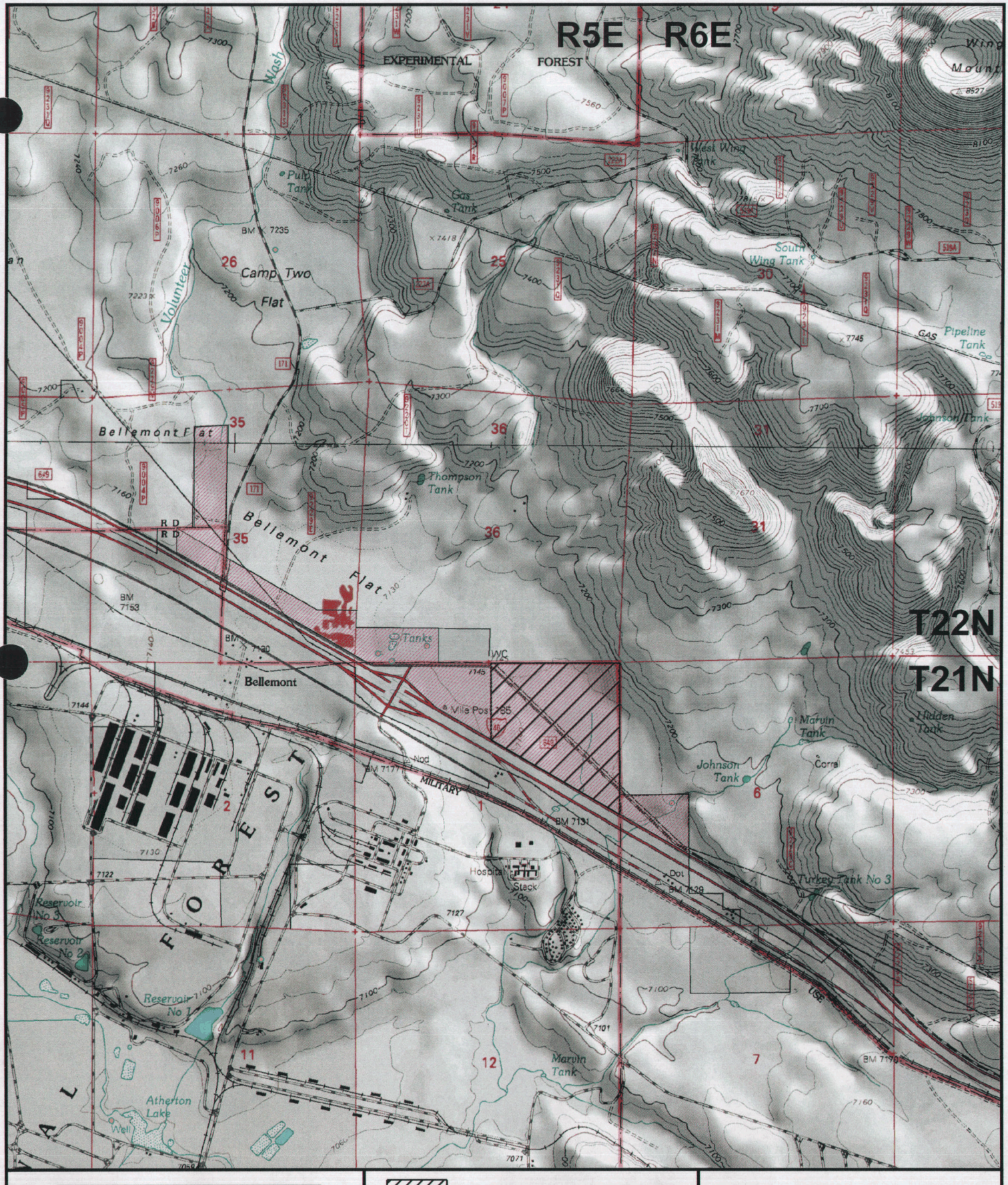

Figure 1
Local Study Area

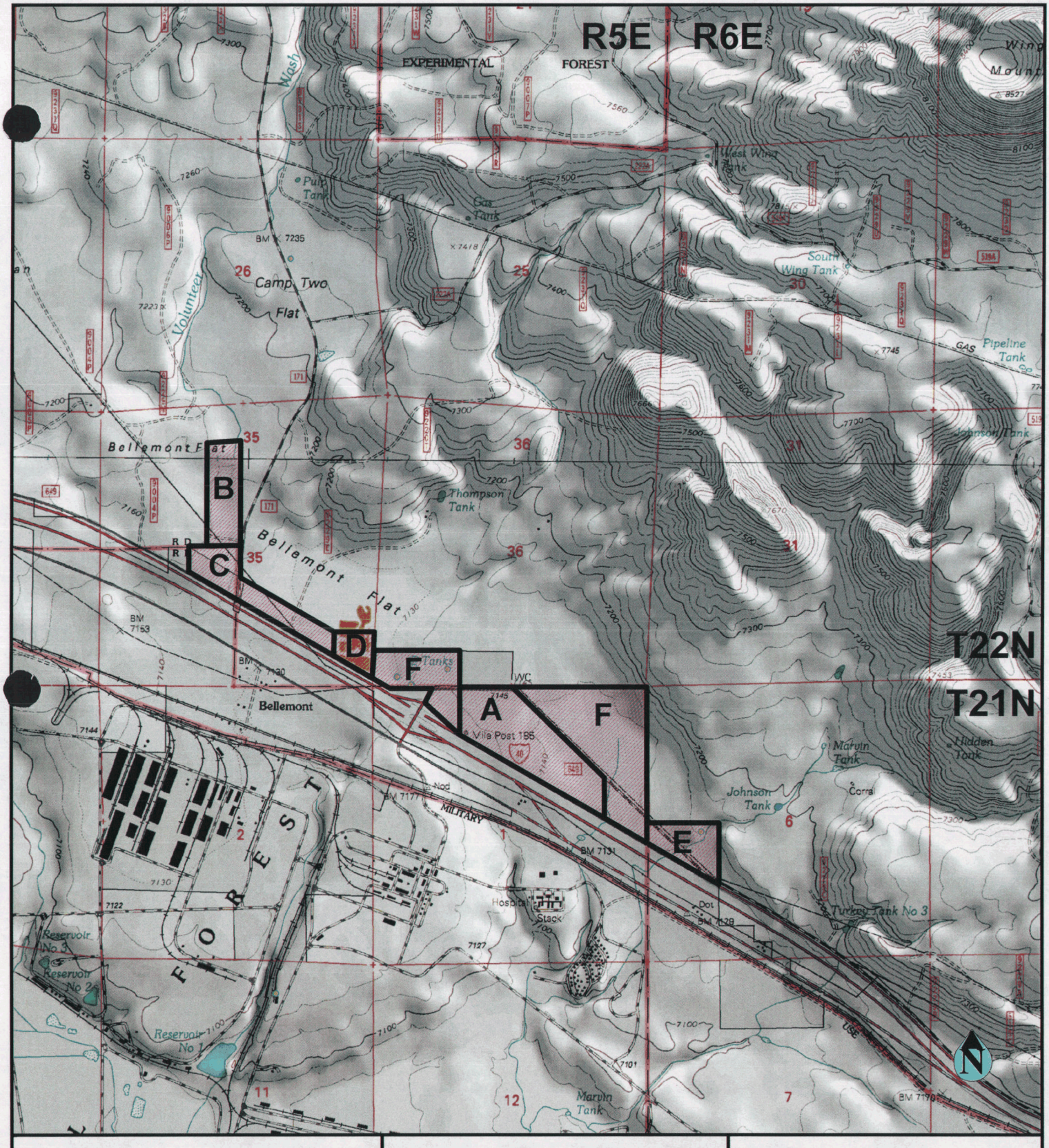

1 mile

HydroSystems Inc.
GARY G. SMALL M.S., P.G., C.E.I
1220 S. PARK LANE. SUITE 5 TEMPE, AZ. 85281
TELEPHONE: 480-517-9050 FAX: 480-517-9049

Legend

A- Empire Properties, LLC
B- Win-Peters, Inc.
C- Northwinds Commerce Park, LLC
D- Flagstaff Meadows R.V. Park, LLC
E- Greenfield Land Development Profit Sharing Plan
F- Original CCN

Figure 2
Proposed CCN Expansion

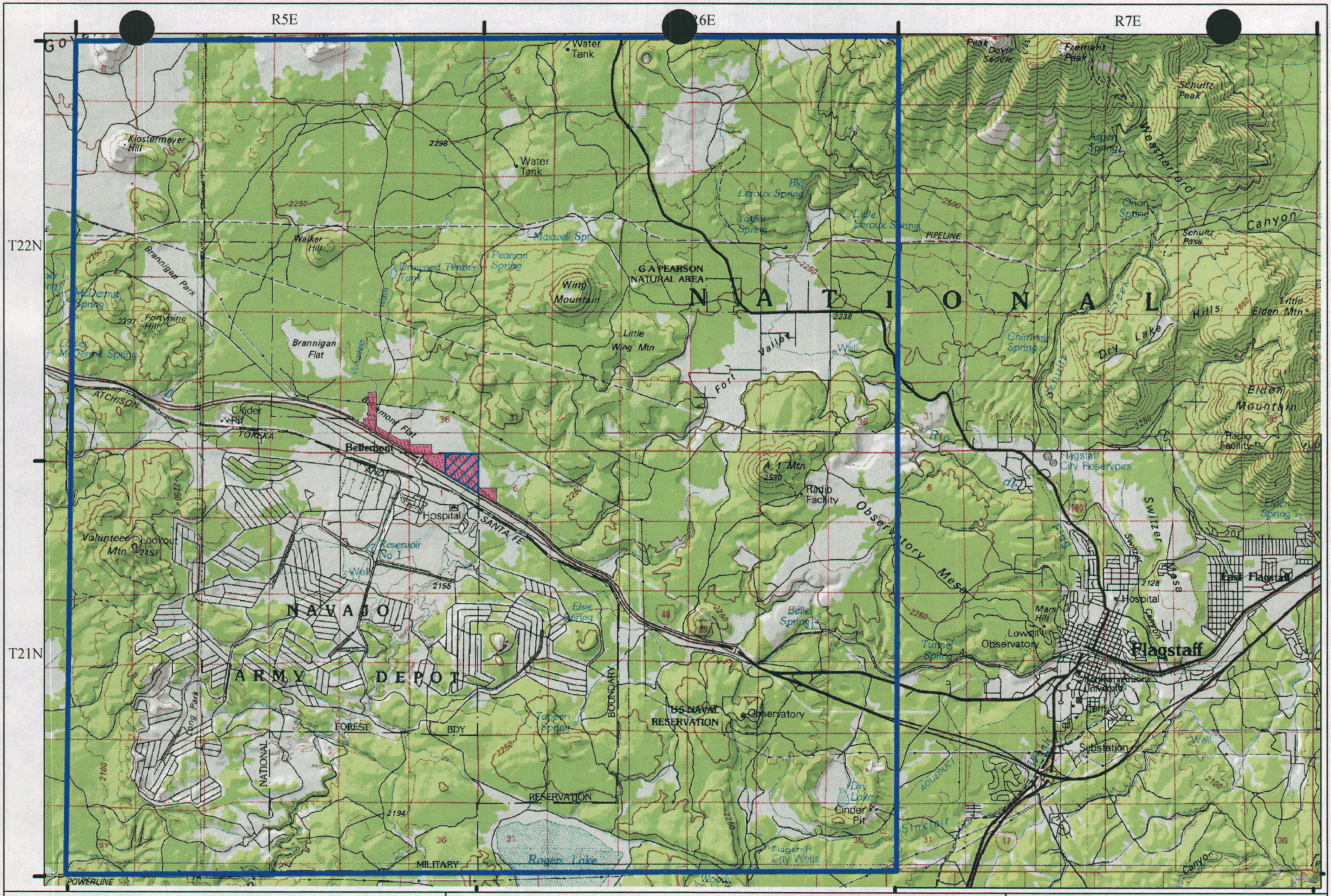

HydroSystems Inc.
GARY G. SMALL M.S., P.G., C.E.I
1220 S. PARK LANE. SUITE 5 TEMPE, AZ. 85281
TELEPHONE: 480-517-9050 FAX: 480-517-9049

Study Area Boundary

Expanded CCN Utility Source, LLC.

0 1 2 3 4 miles

N

Figure 3

Regional Study Area

Figure 4 CSAMT Line Locations For Deep Well 3

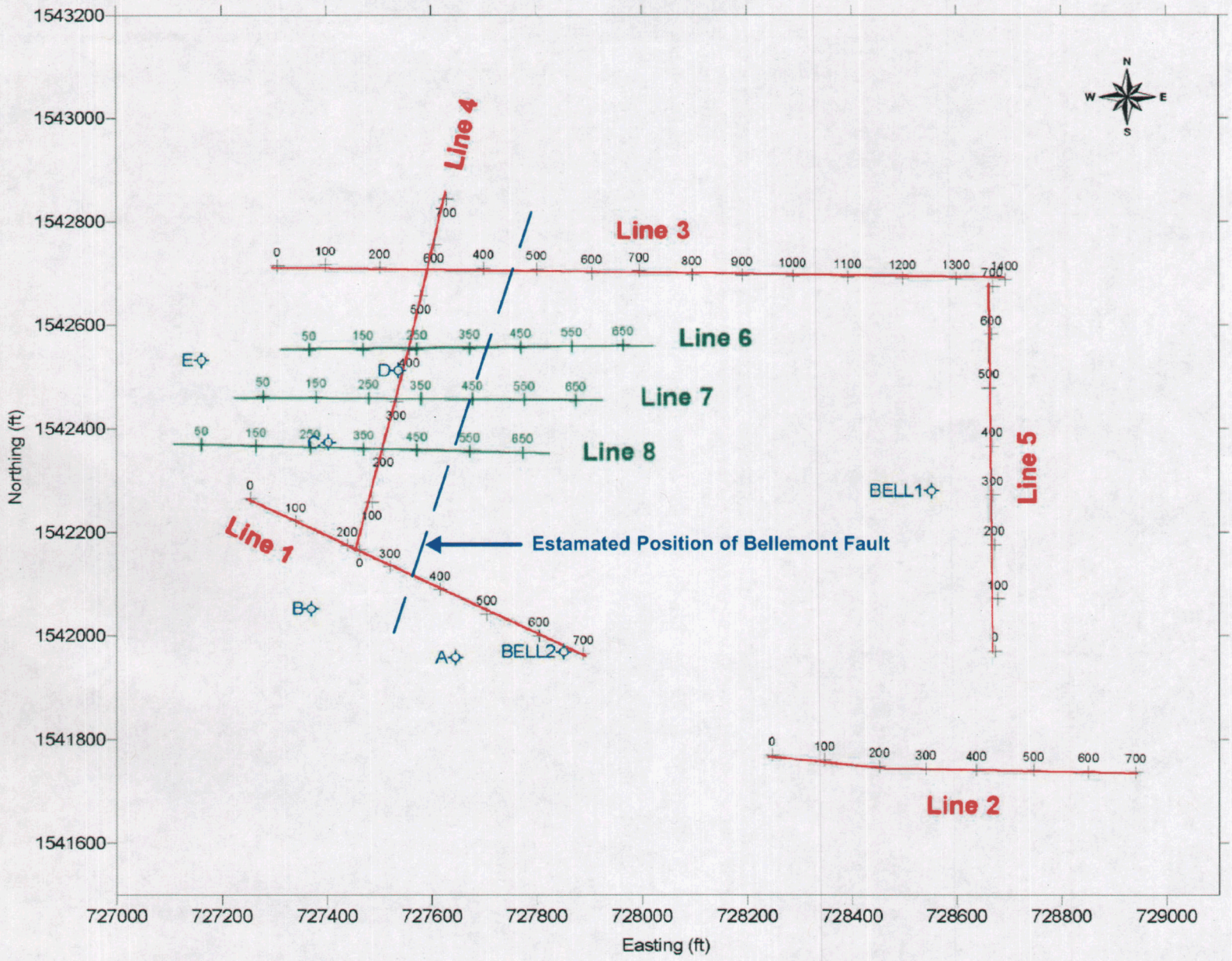

Zonge Job0404
for HydroSystems, Inc.

0 ft 100 ft 200 ft 300 ft 400 ft 500 ft

AZ State Plane Central, NAD83

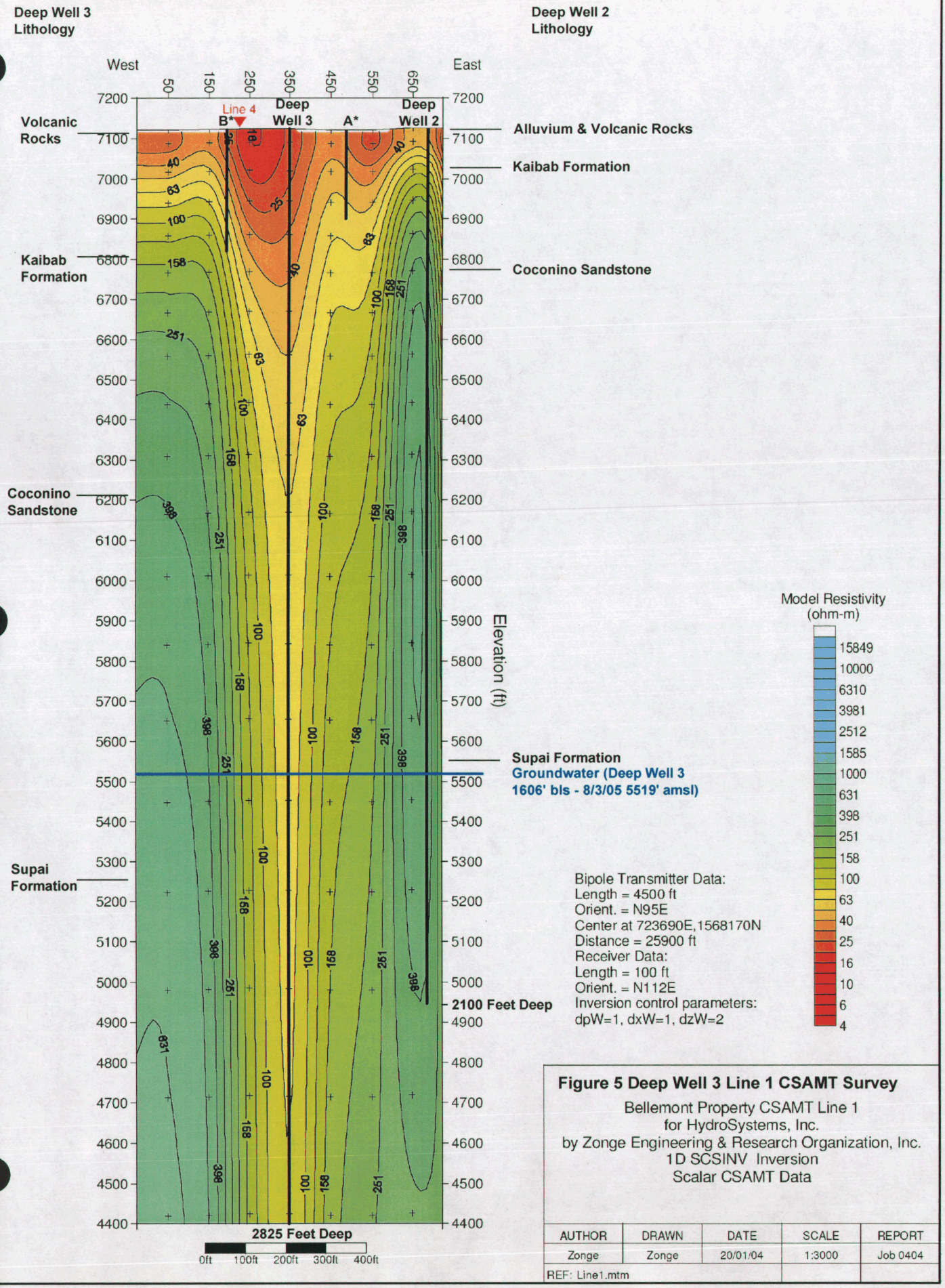

Figure 5 Deep Well 3 Line 1 CSAMT Survey

Bellemont Property CSAMT Line 1
for HydroSystems, Inc.
by Zonge Engineering & Research Organization, Inc.
1D SCSINV Inversion
Scalar CSAMT Data

AUTHOR	DRAWN	DATE	SCALE	REPORT
Zonge	Zonge	20/01/04	1:3000	Job 0404
REF: Line1.mtm				

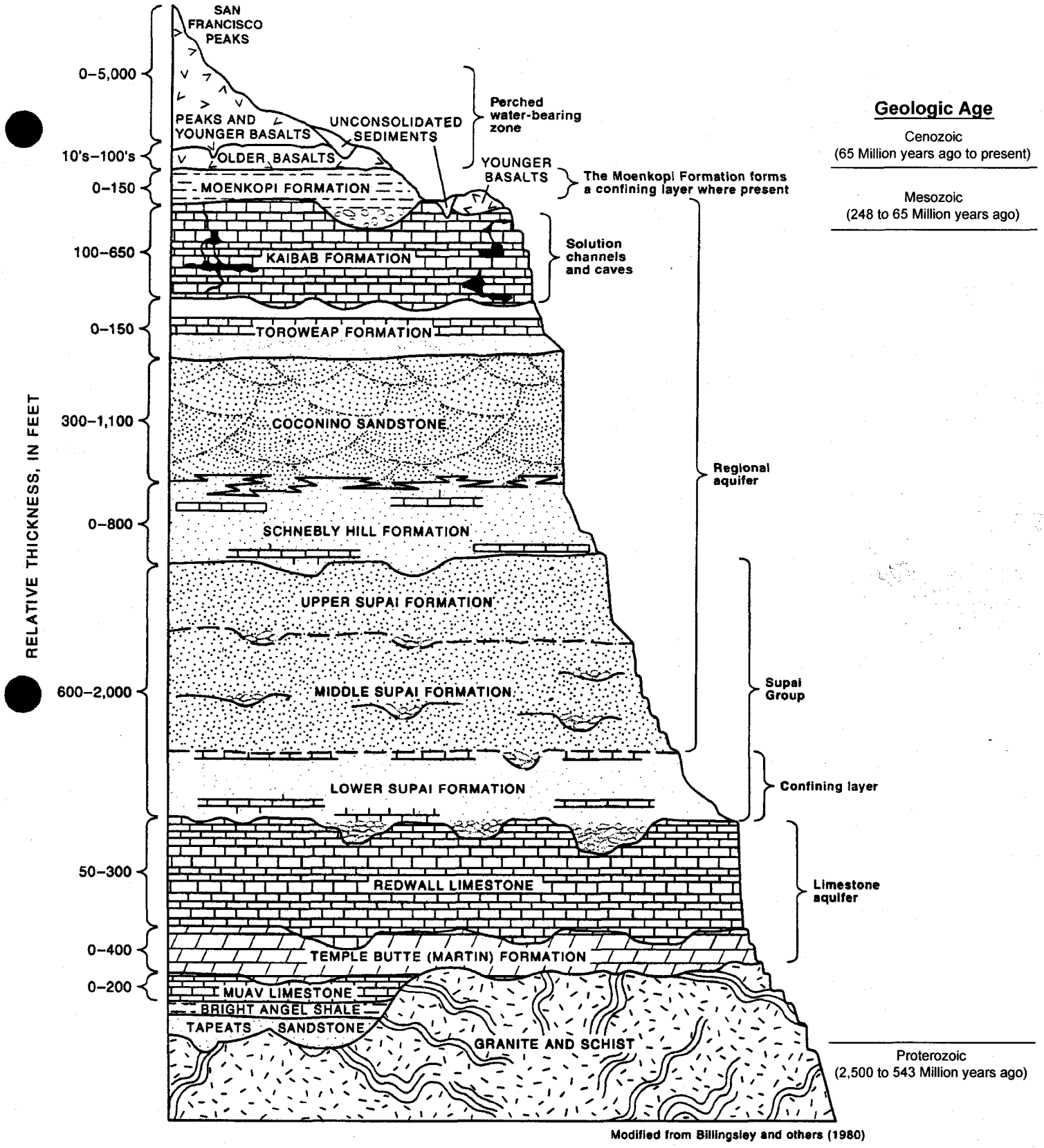

Figure 6 Generalized Stratigraphic Section of Rock Units, Flagstaff, Arizona.

HydroSystems Inc.
GARY G. SMALL M.S., P.G., C.E.I
1220 S. PARK LANE. SUITE 5 TEMPE, AZ. 85281
TELEPHONE: 480-517-9050 FAX: 480-517-9049

(Modified From Bills et al., 2000)

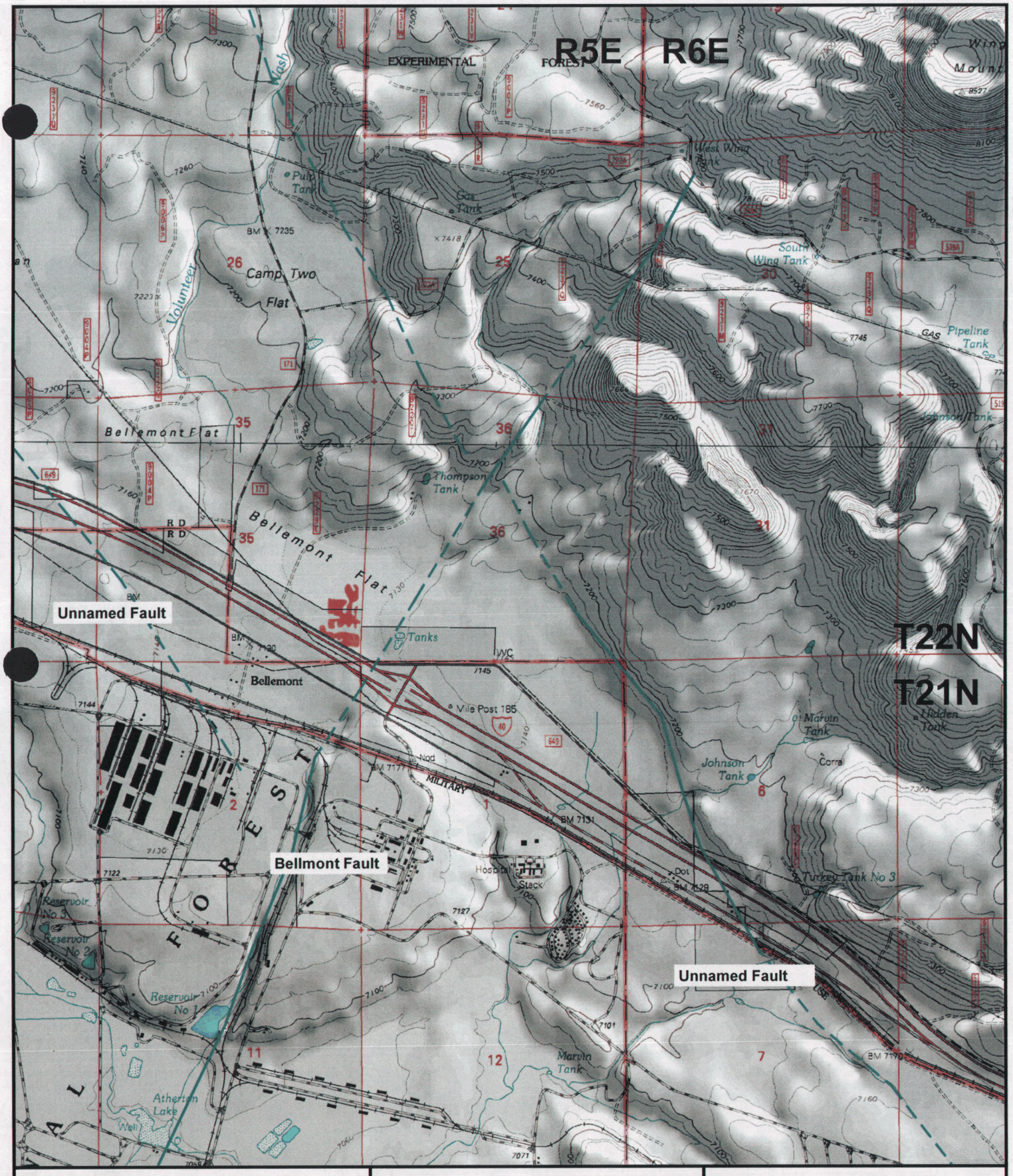

1 mile

HydroSystems Inc.
GARY G. SMALL M.S., P.G., C.E.I
1220 S. PARK LANE. SUITE 5 TEMPE, AZ. 85281
TELEPHONE: 480-517-9050 FAX: 480-517-9049

Explanation

Fault Position

Fault Position Uncertain

N

Figure 7

Fault Locations in the Bellmont Area

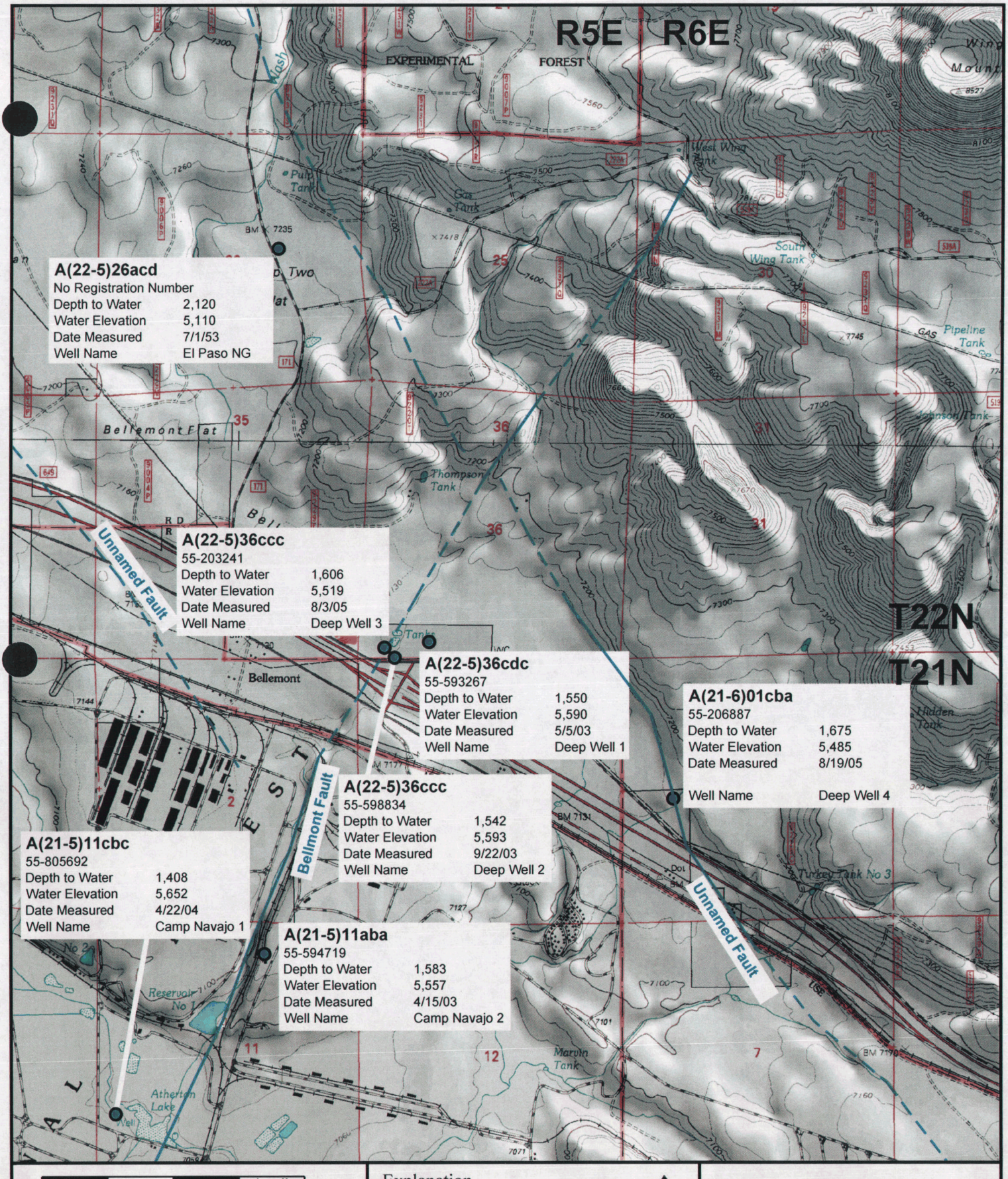

HydroSystems Inc.
GARY G. SMALL M.S., P.G., C.E.I
1220 S. PARK LANE. SUITE 5 TEMPE, AZ. 85281
TELEPHONE: 480-517-9050 FAX: 480-517-9049

Explanation

- Fault Position
- Fault Position Uncertain
- Regional Aquifer Well Locations

Figure 8

Regional Aquifer Well Locations

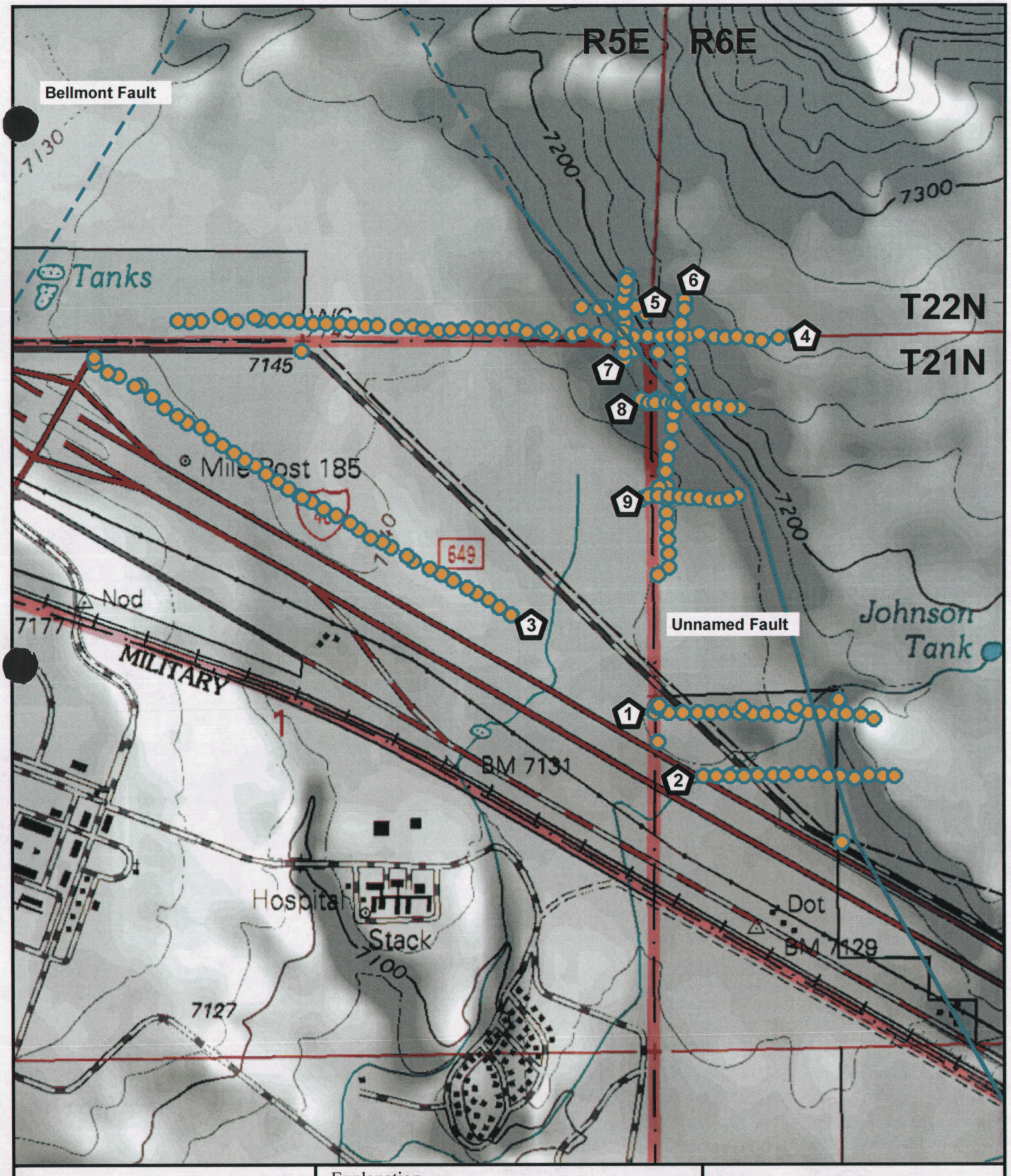

HydroSystems Inc.
GARY G. SMALL M.S., P.G., C.E.I
1220 S. PARK LANE. SUITE 5 TEMPE, AZ. 85281
TELEPHONE: 480-517-9050 FAX: 480-517-9049

Explanation

- Survey Name and Origin
- Fault Position
- Fault Position Uncertain
- CSAMT Survey Lines

Figure 9

Enlarged CSAMT Line Locations for Deep Well 4

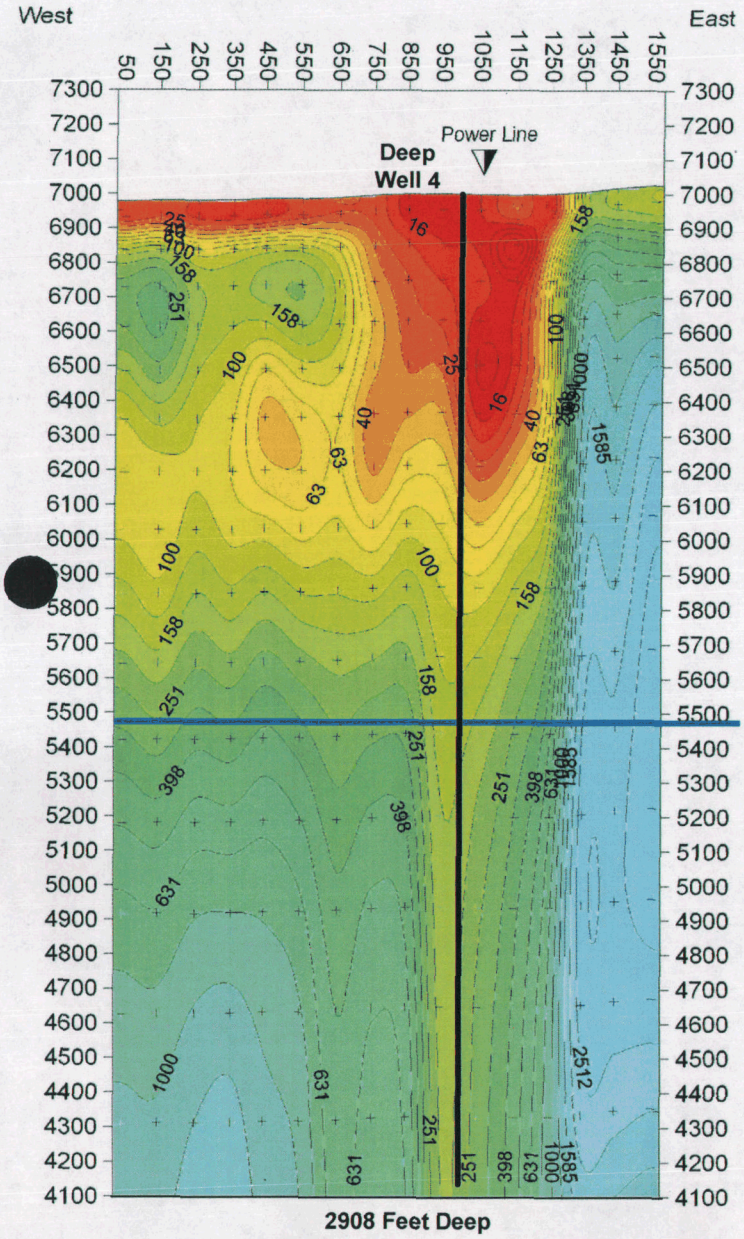

Bipole Transmitter Data:
Length = 4500 ft
Orient. = N90E
Center at 1396962E,12813858N
Distance = 22300 ft
Receiver Data:
Length = 100 ft
Orient. = N90E
Inversion control parameters:
dpW=1, dxW=1, dzW=2

Groundwater (Deep Well 4 1675' bls - 8/19/05 5485' amsl)

Model Resistivity (ohm-m)

15849
6310
2512
1000
398
158
63
25
10
4

Figure 10 Deep Well 4 Line 1
CSAMT Survey

1D Smooth-Model Inversion
Scalar CSAMT Data

AUTHOR	DRAWN	DATE	SCALE	REPORT
Zonge Engine	Zonge Engine	08/02/05	1:10000	Job 0488
REFL1HAfeet.m1d				

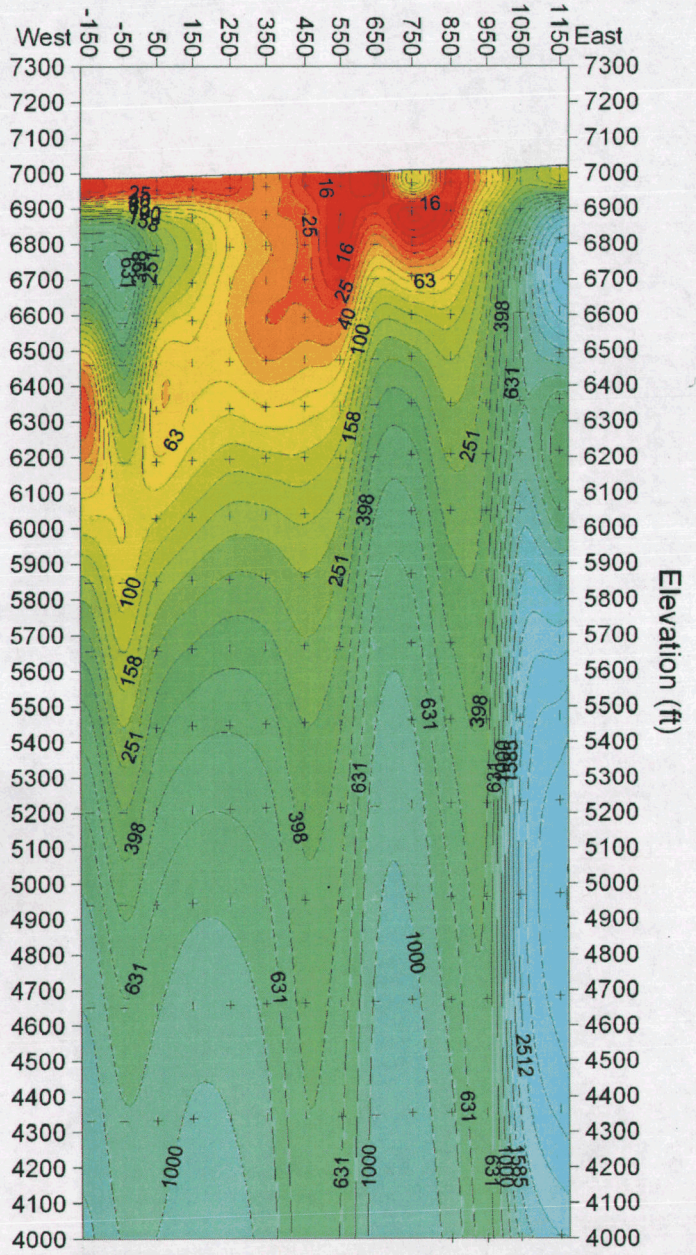

Model Resistivity (ohm-m)

15849
10000
6310
3981
2512
1585
1000
631
398
251
158
100
63
40
25
16
10
6
4

Bipole Transmitter Data:
Length = 4500 ft
Orient. = N90E
Center at 1396962E,12813858N
Distance = 22800 ft
Receiver Data:
Length = 100 ft
Orient. = N90E
Inversion control parameters:
dpW=1, dxW=1, dzW=2

Figure 11
Line 2 CSAMT Survey
1D Smooth-Model Inversion
Scalar CSAMT Data

AUTHOR	DRAWN	DATE	SCALE	REPORT
Zonge Engine	Zonge Engine	07/02/05	1:10000	Job 0488
REFL21dfeet.m1d				

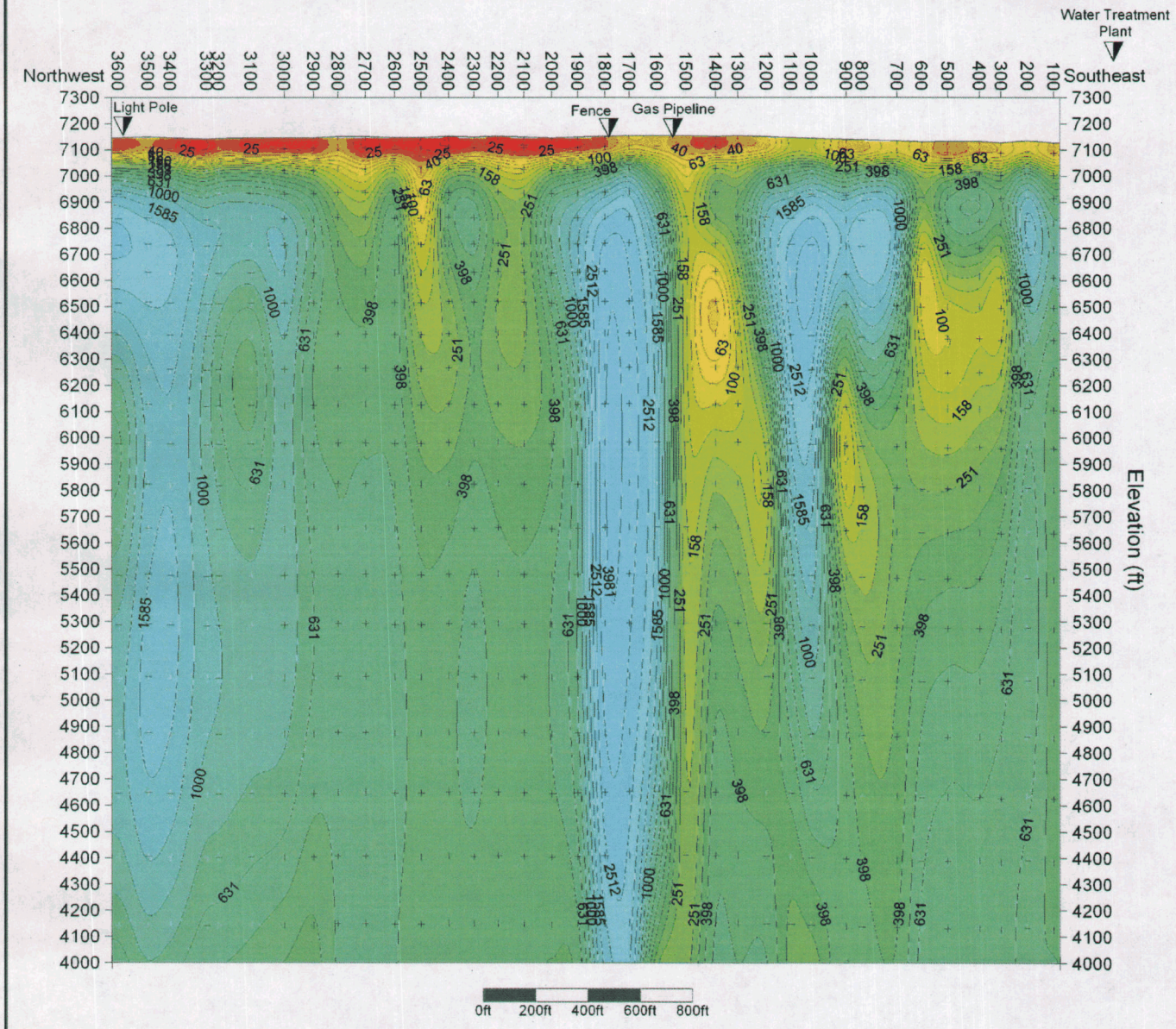

Model Resistivity (ohm-m)

15849
10000
6310
3981
2512
1585
1000
631
398
251
158
100
63
40
25
16
10
6
4

Bipole Transmitter Data:
Length = 4500 ft
Orient. = N90E
Center at 1396962E,12813858N
Distance = 19700 ft
Receiver Data:
Length = 100 ft
Orient. = SE
Inversion control parameters:
dpW=1, dxW=1, dzW=2

Figure 12
Line 3 CSAMT Survey

1D Smooth-Model Inversion
Scalar CSAMT Data

AUTHOR	DRAWN	DATE	SCALE	REPORT
Zonge Engine	Zonge Engine	07/02/05	1:10000	Job 0488
REF: 1dprelimft.m1d				

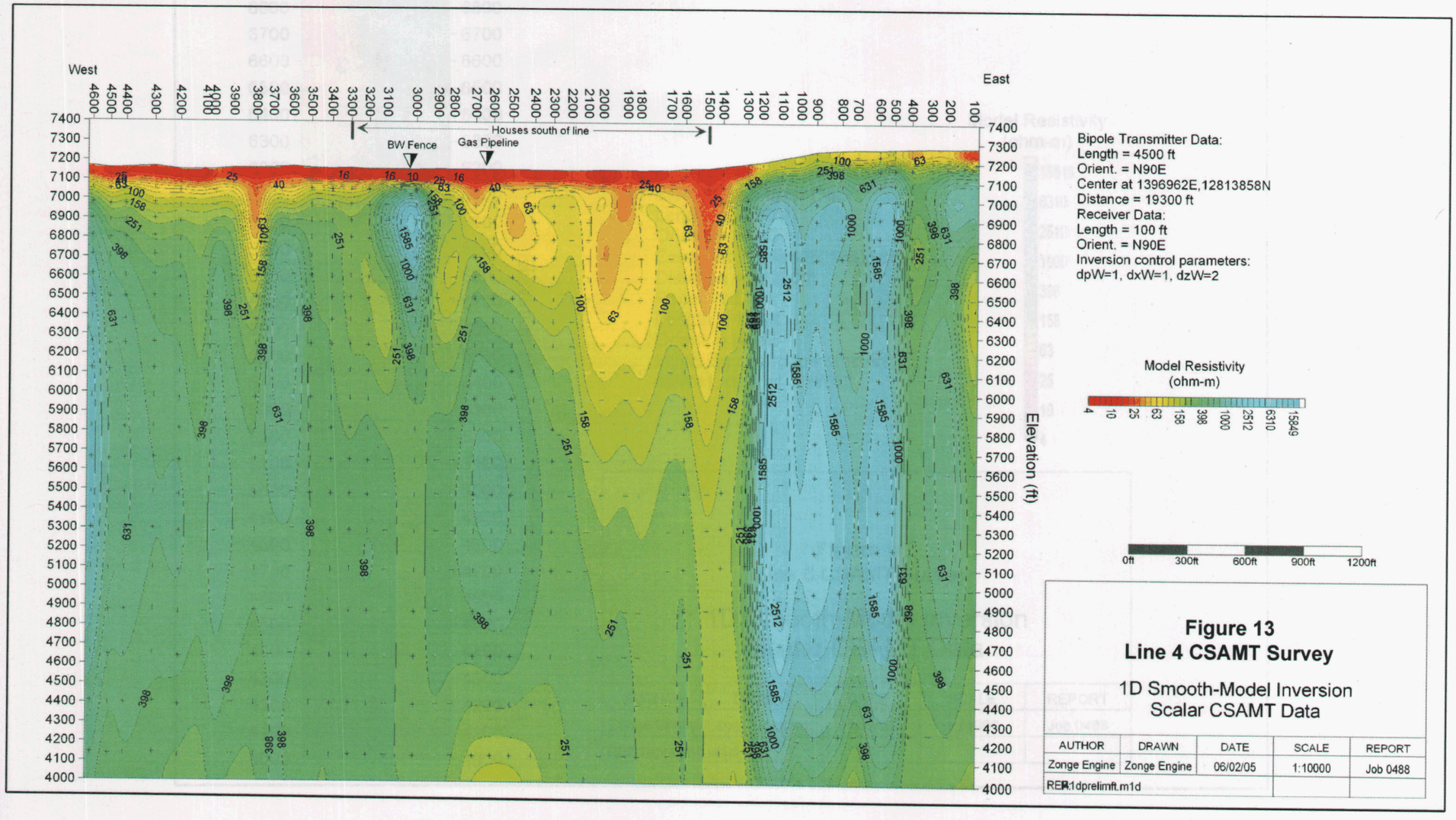

Figure 13
Line 4 CSAMT Survey

1D Smooth-Model Inversion
Scalar CSAMT Data

AUTHOR	DRAWN	DATE	SCALE	REPORT
Zonge Engine	Zonge Engine	06/02/05	1:10000	Job 0488
REF: 1dprelimft.m1d				

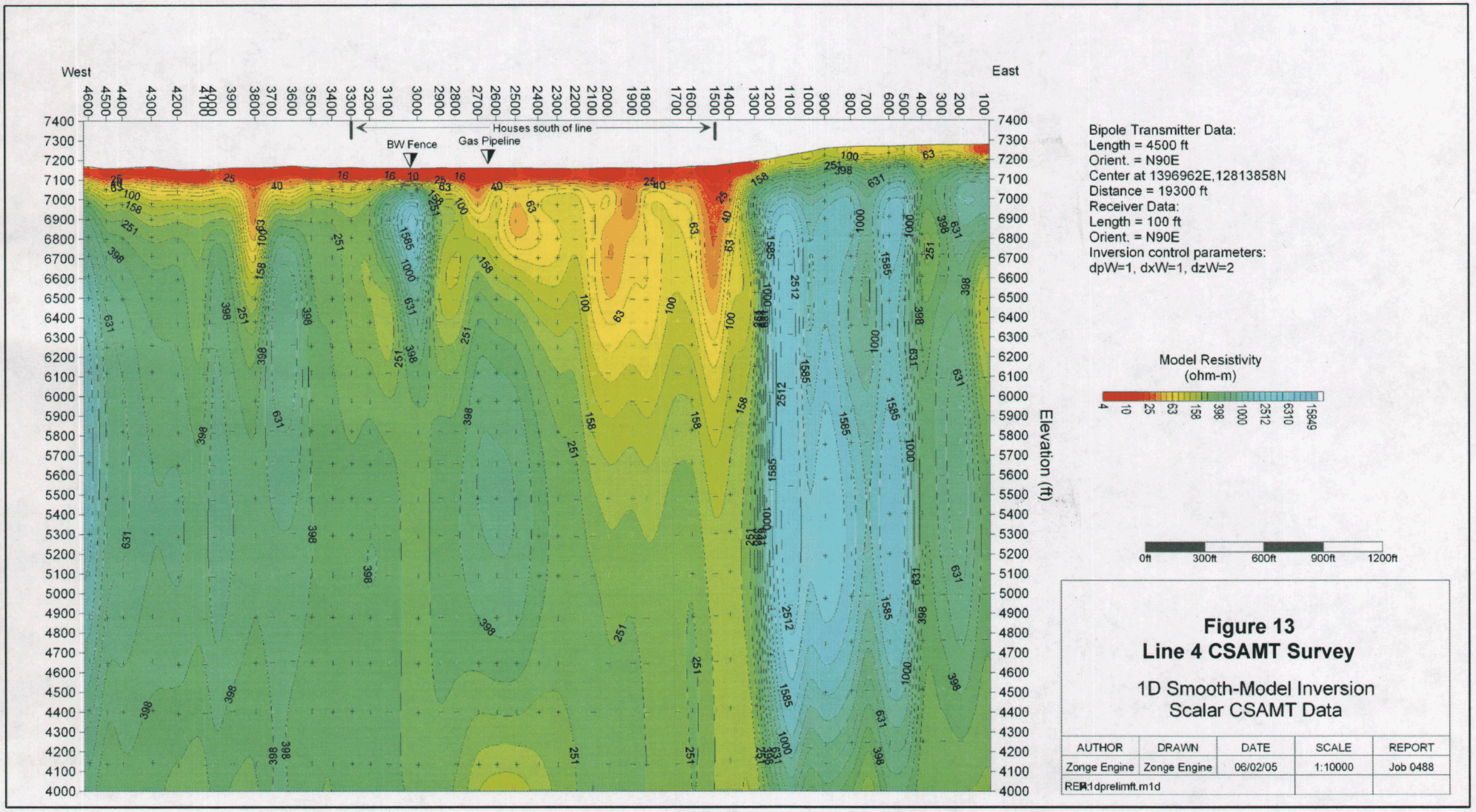

Figure 13
Line 4 CSAMT Survey

1D Smooth-Model Inversion
Scalar CSAMT Data

AUTHOR	DRAWN	DATE	SCALE	REPORT
Zonge Engine	Zonge Engine	06/02/05	1:10000	Job 0488
REF: 1dprelimft.m1d				

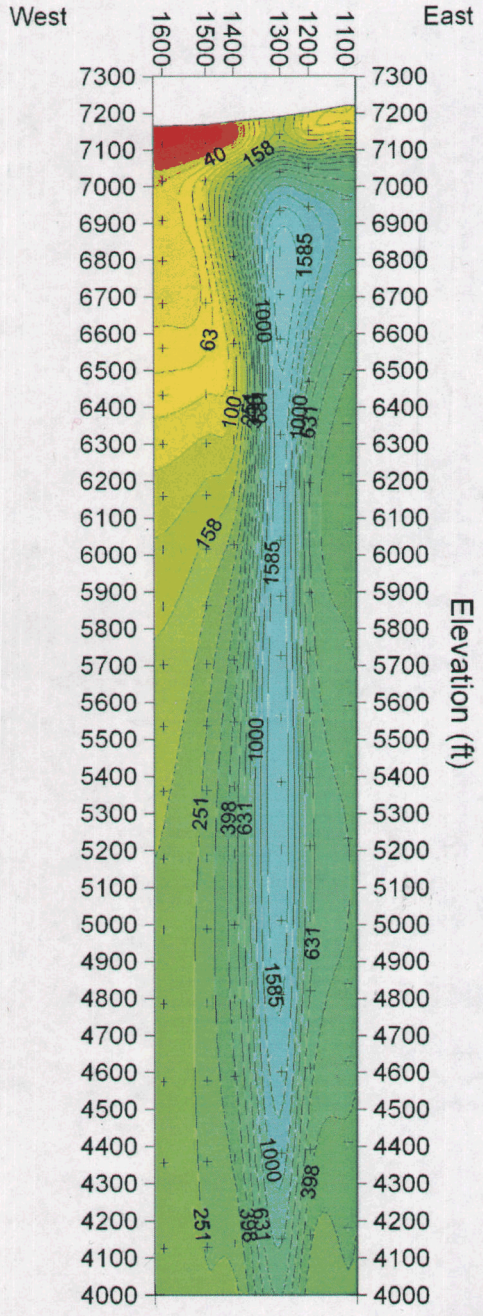

Bipole Transmitter Data:
Length = 4500 ft
Orient. = N90E
Center at 1396962E,12813858N
Distance = 19200 ft
Receiver Data:
Length = 100 ft
Orient. = N90E
Inversion control parameters:
dpW=1, dxW=1, dzW=2

Model Resistivity
(ohm-m)

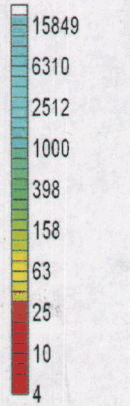

Figure 14
Line 5 CSAMT Survey

1D Smooth-Model Inversion
Scalar CSAMT Data

AUTHOR	DRAWN	DATE	SCALE	REPORT
Zonge Engine	Zonge Engine	08/02/05	1:10000	Job 0488
REF: 1dprelimft.m1d				

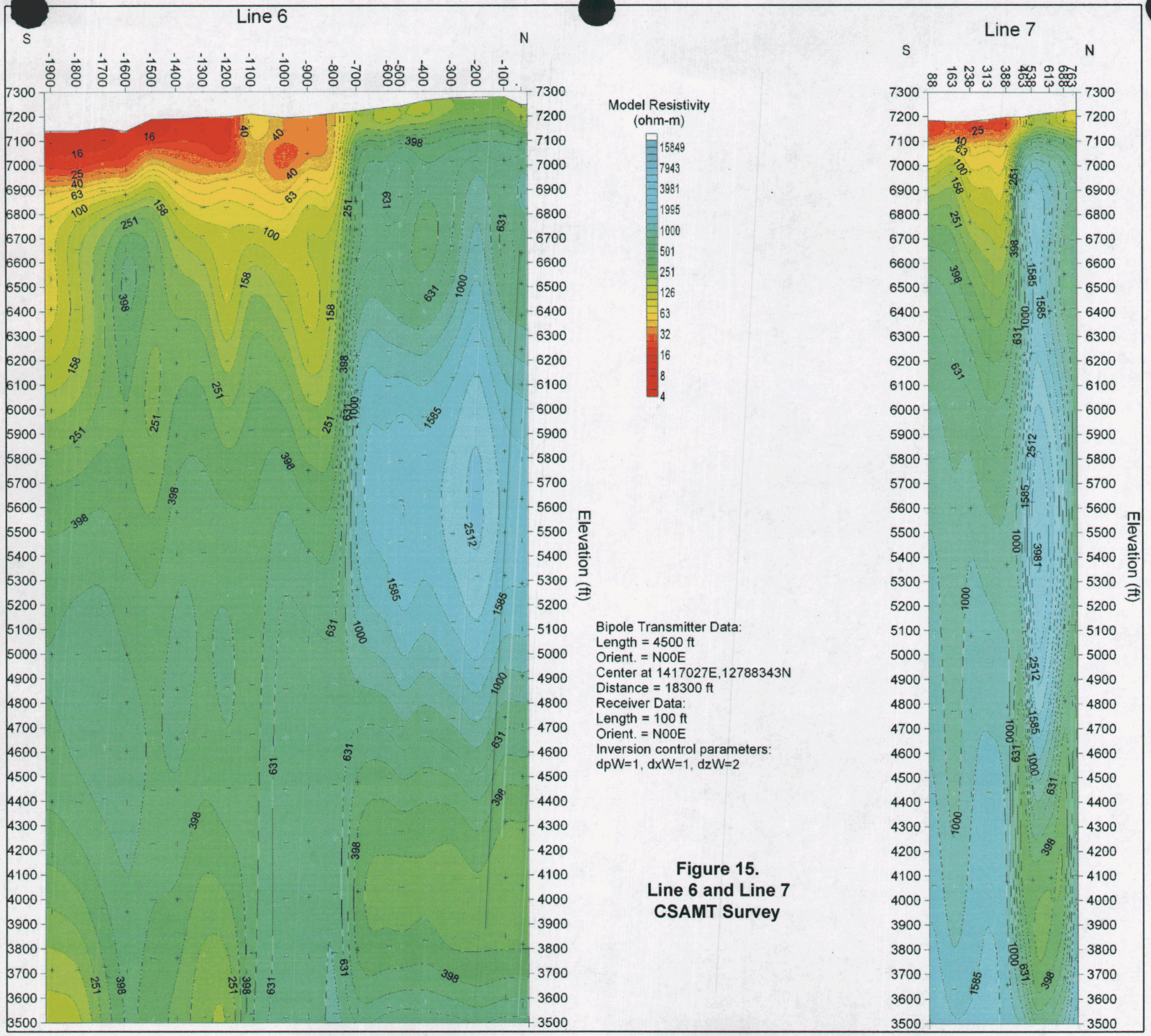

Figure 15.
Line 6 and Line 7
CSAMT Survey

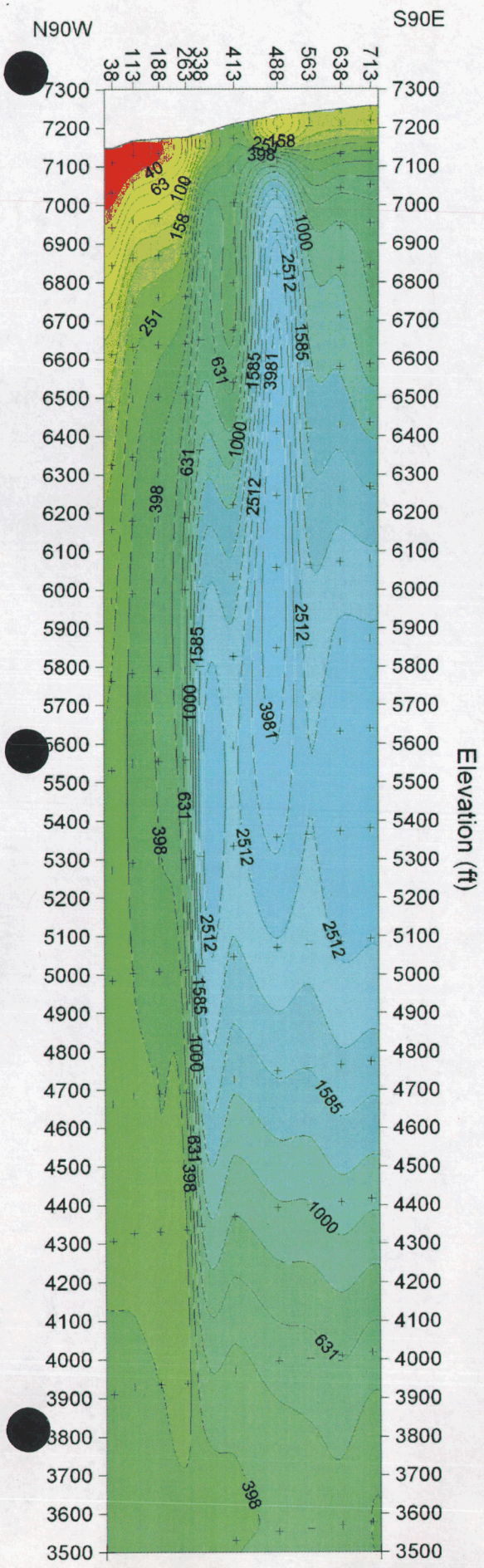

Line 8

Model Resistivity
(ohm-m)

15849
7943
3981
1995
1000
501
251
126
63
32
16
8
4

Bipole Transmitter Data:
Length = 4500 ft
Orient. = N90E
Center at 1396962E,12813858N
Distance = 20000 ft
Receiver Data:
Length = 75 ft
Orient. = N90E
Inversion control parameters:
dpW=1, dxW=1, dzW=2

Figure 16 Line 8 (Lot 31)
CSAMT Survey

1D Smooth-Model Inversion
Scalar CSAMT Data

AUTHOR	DRAWN	DATE	SCALE	REPORT
Zonge Engine	Zonge Engine	24/02/05	1:10000	Job 0488
REFL81dfeet.m1d				

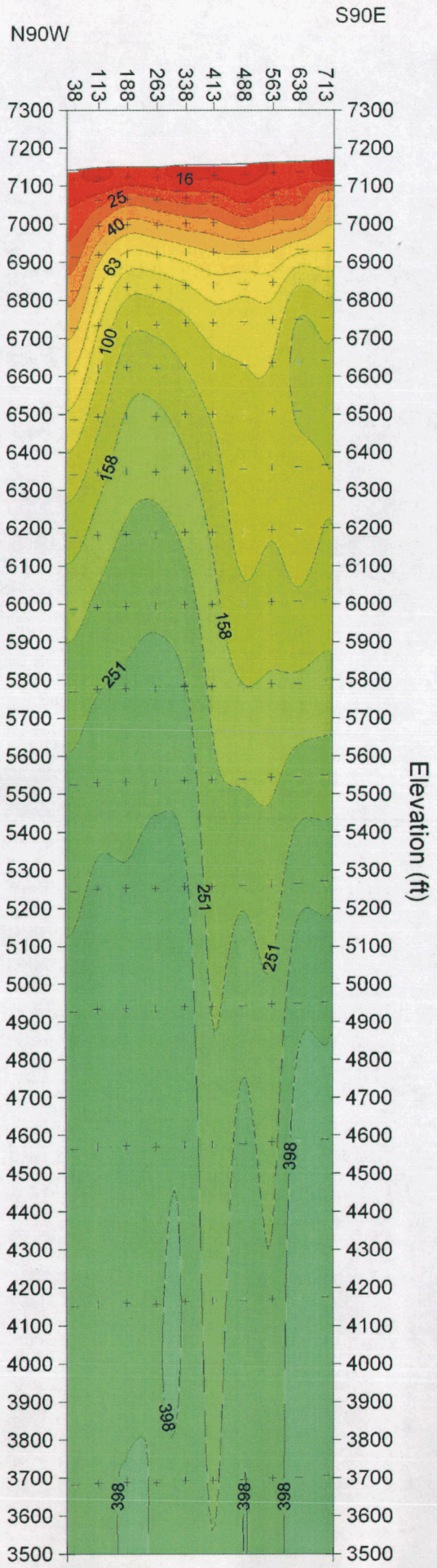

Bipole Transmitter Data:
Length = 4500 ft
Orient. = N90E
Center at 1396962E,12813858N
Distance = 20700 ft
Receiver Data:
Length = 75 ft
Orient. = N90E
Inversion control parameters:
dpW=1, dxW=1, dzW=2

Model Resistivity
(ohm-m)

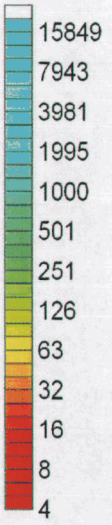

Figure 17 Line 9 CSAMT Survey

1D Smooth-Model Inversion
Scalar CSAMT Data

AUTHOR	DRAWN	DATE	SCALE	REPORT
Zonge Engine	Zonge Engine	24/02/05	1:10000	Job 0488
REFL91dfeet.m1d				

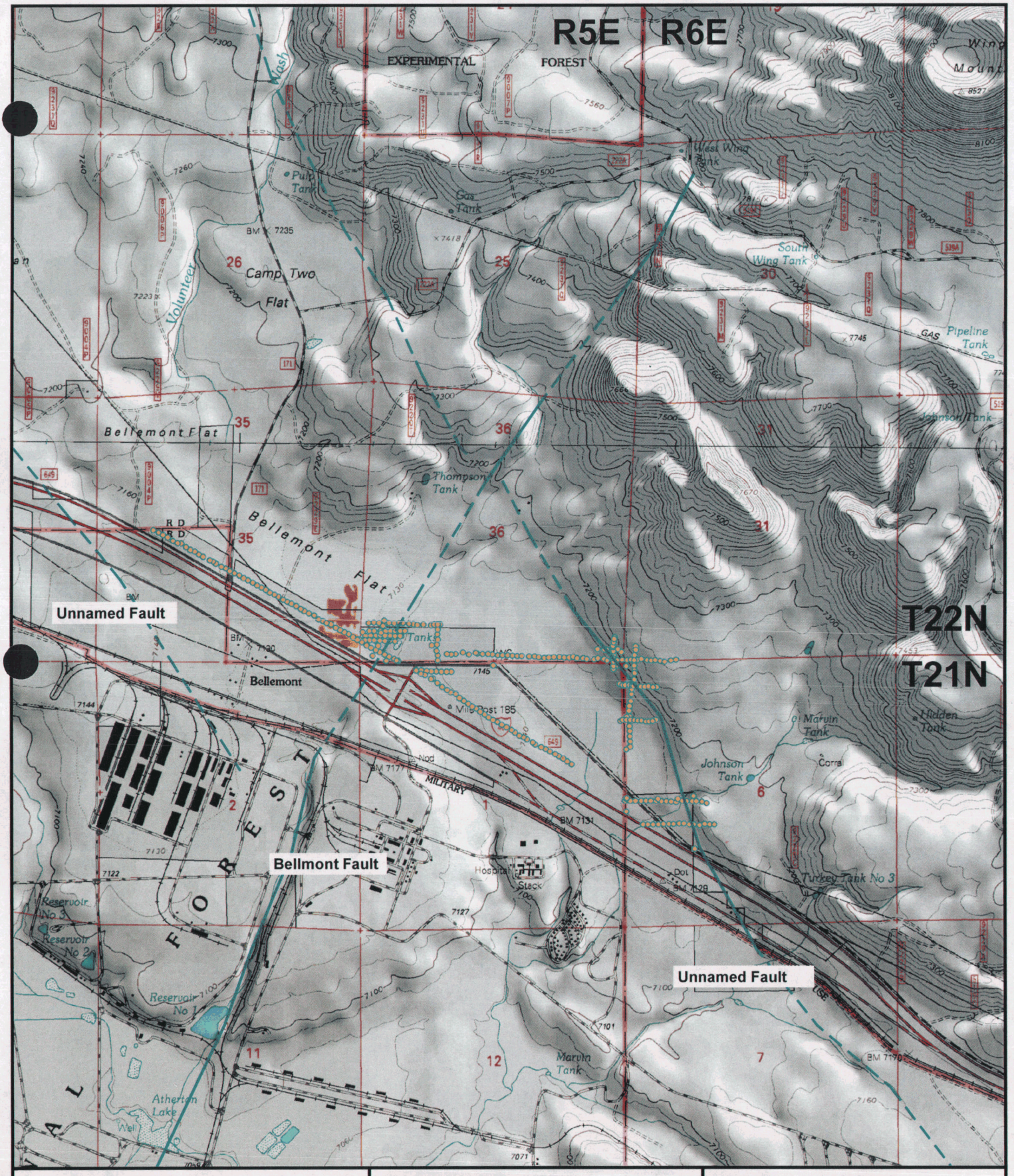

Explanation

Fault Position

Fault Position Uncertain

CSAMT Survey Lines

HydroSystems Inc.
GARY G. SMALL M.S., P.G., C.E.I
1220 S. PARK LANE. SUITE 5 TEMPE, AZ. 85281
TELEPHONE: 480-517-9050 FAX: 480-517-9049

Figure 18

Fault Locations and All CSAMT Survey Lines

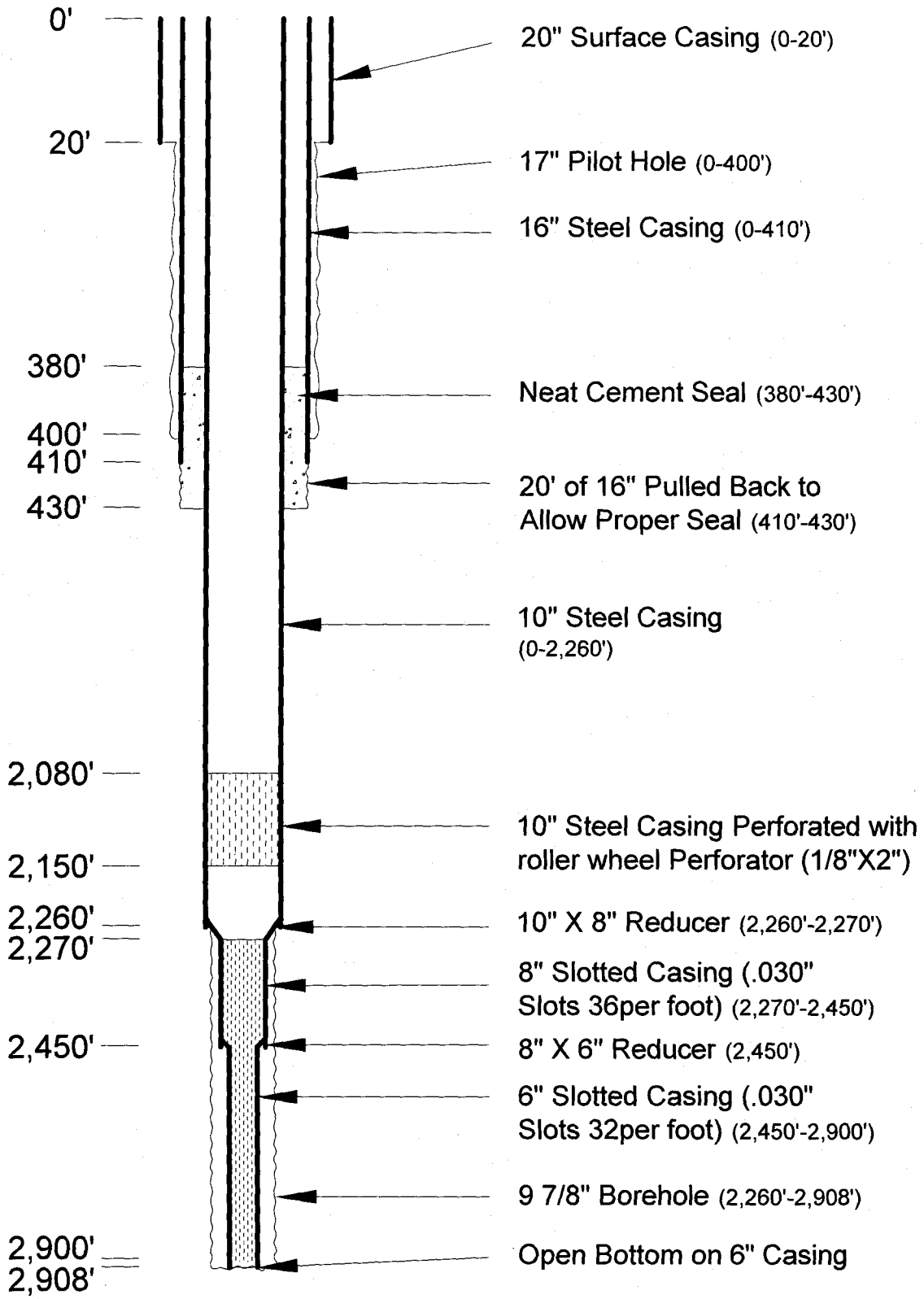

NOT TO SCALE

Dual Rotary Completion

HydroSystems Inc.
GARY G. SMALL M.S., P.G., C.E.I
1220 S. PARK LANE. SUITE 5 TEMPE, AZ. 85281
TELEPHONE: 480-517-9050 FAX: 480-517-9049

Bellmont Deep Well 4
Conceptual Design

Figure 19

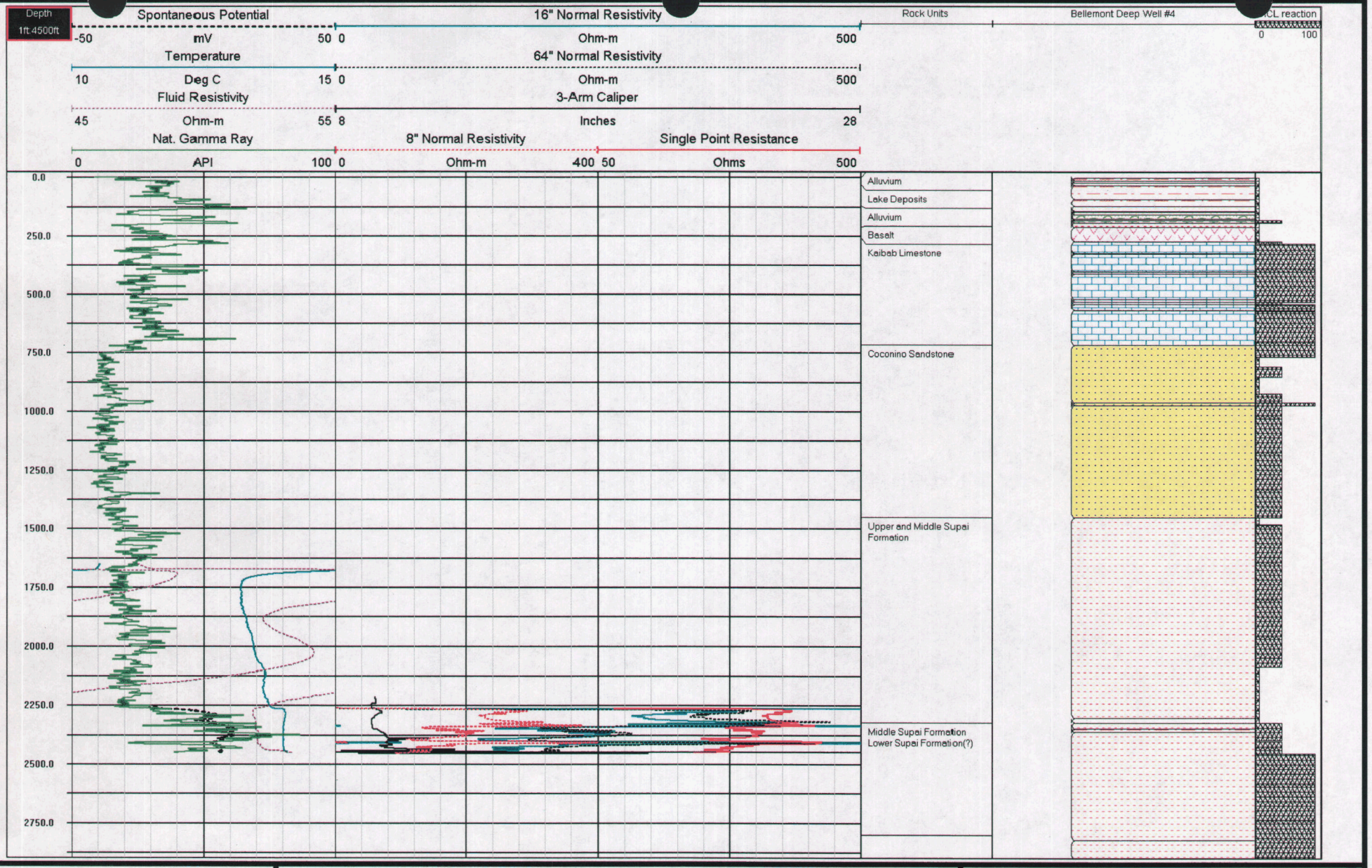

HydroSystems Inc.
GARY G. SMALL M.S., P.G., C.E.I
1220 S. PARK LANE. SUITE 5 TEMPE, AZ. 85281
TELEPHONE: 480-517-9050 FAX: 480-517-9049

Lithologic and Geophysical Logs
Deep Well 4

Figure 20

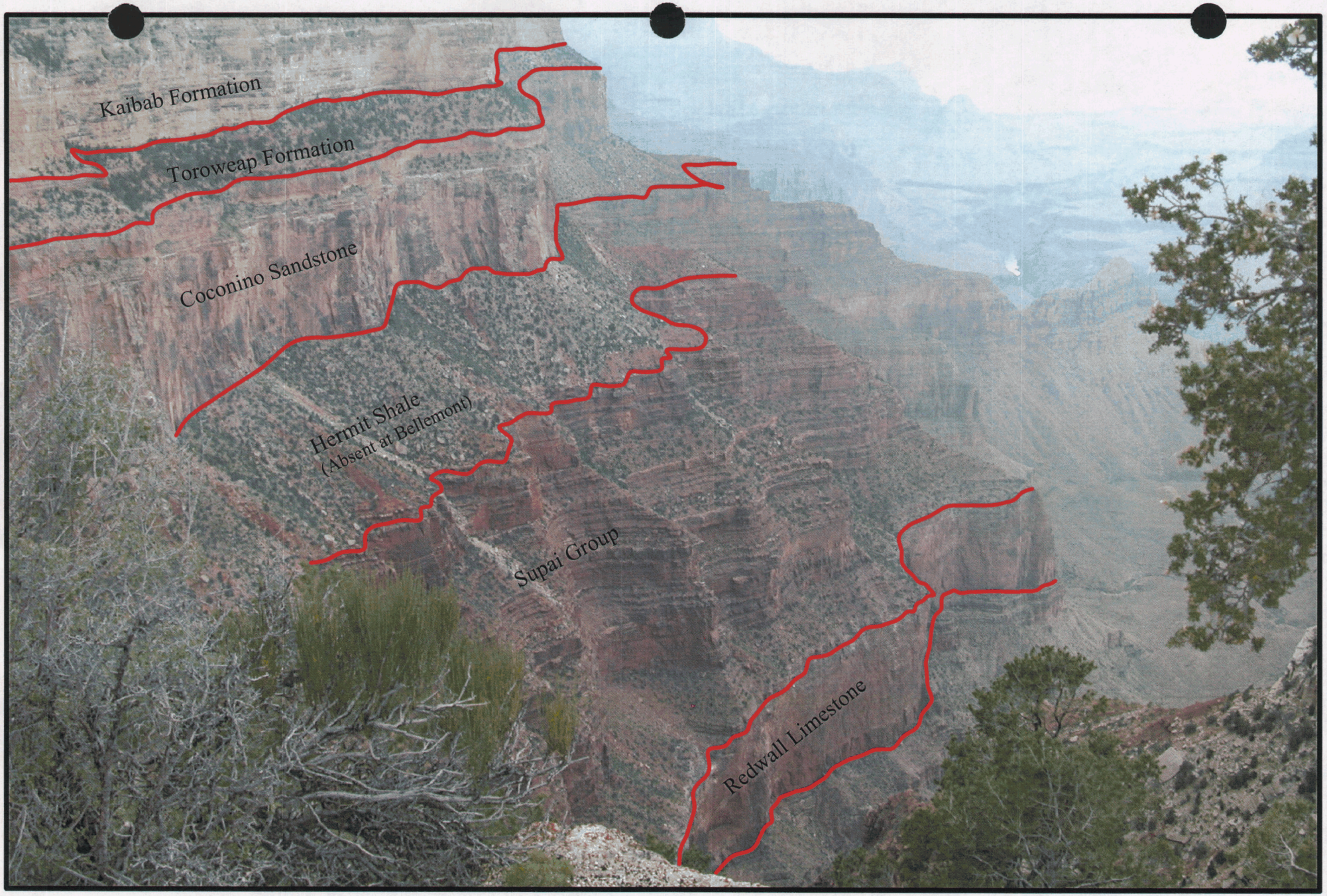

HydroSystems Inc.
GARY G. SMALL M.S., P.G., C.E.I
1220 S. PARK LANE. SUITE 5 TEMPE, AZ. 85281
TELEPHONE: 480-517-9050 FAX: 480-517-9049

Figure 21
Grand Canyon Sedimentary Units

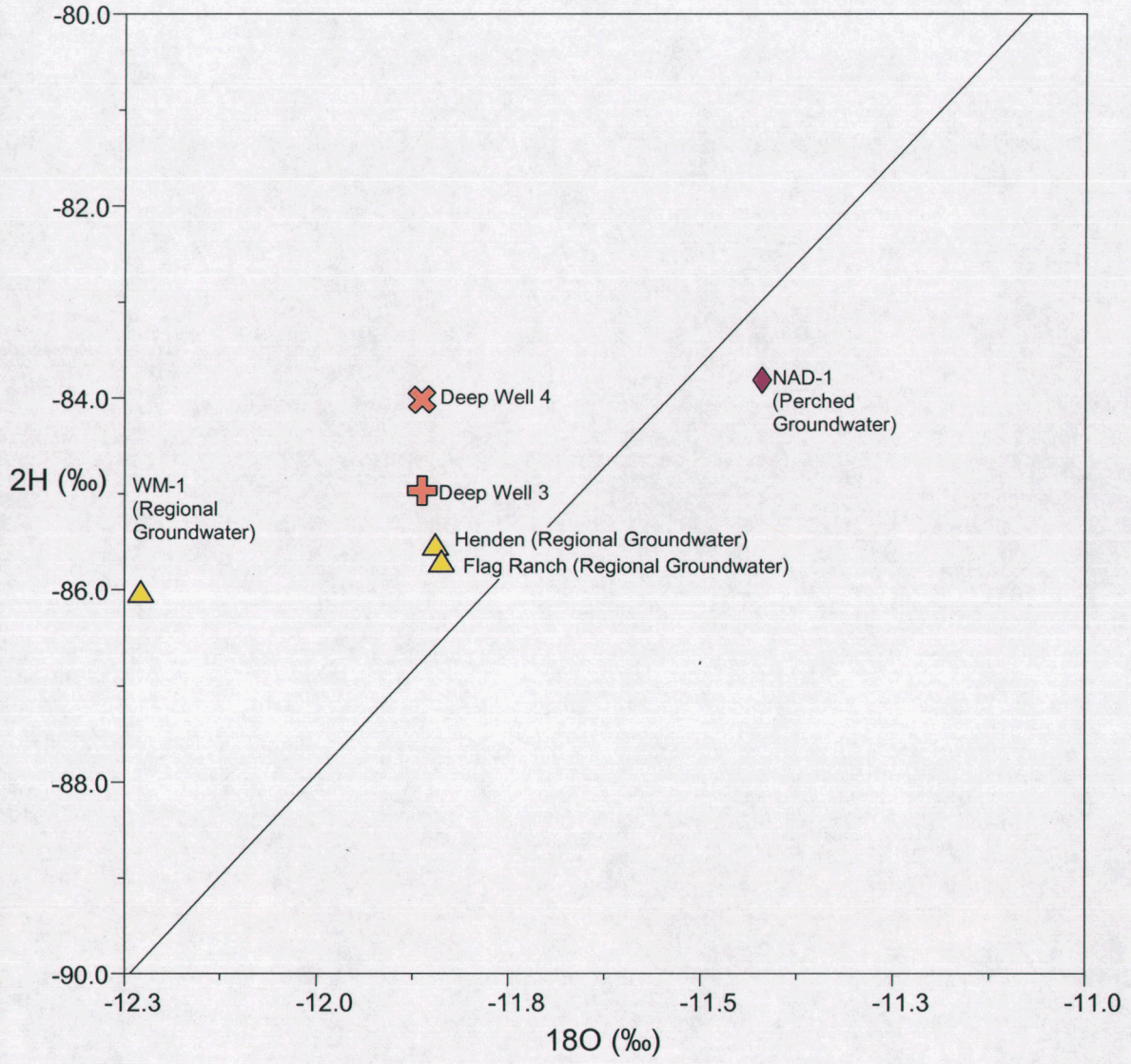

Data Sources: HSI and the University of Arizona Laboratory of Isotope Geochemistry, USGS NWIS Database, and Bills et al., 2000.

FIGURE 22: Meteoric Water Line Plot of Stable Isotopes near Flagstaff Meadows Study Area

HSI HydroSystems Inc.	PROJECT: Utility Source, LLC	PROJECT NO: 05-400
		DATE: 12/14/2005

Figure 23. Groundwater Flow Model Grid and Boundary Conditions

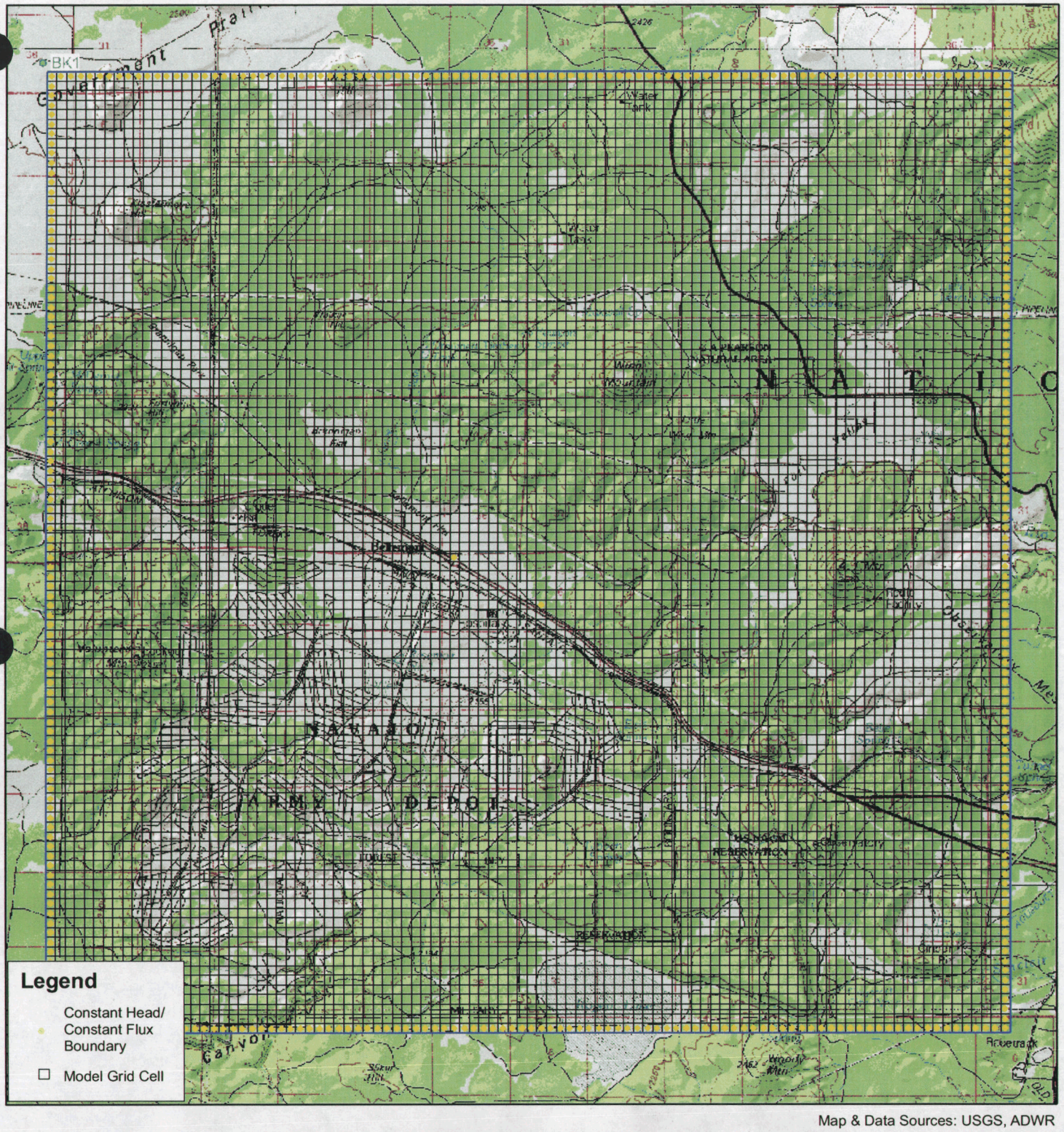

S:\05-400\PAD Report\Figures\Figure 23.pdf

Figure 24. Model Hydraulic Conductivity Values

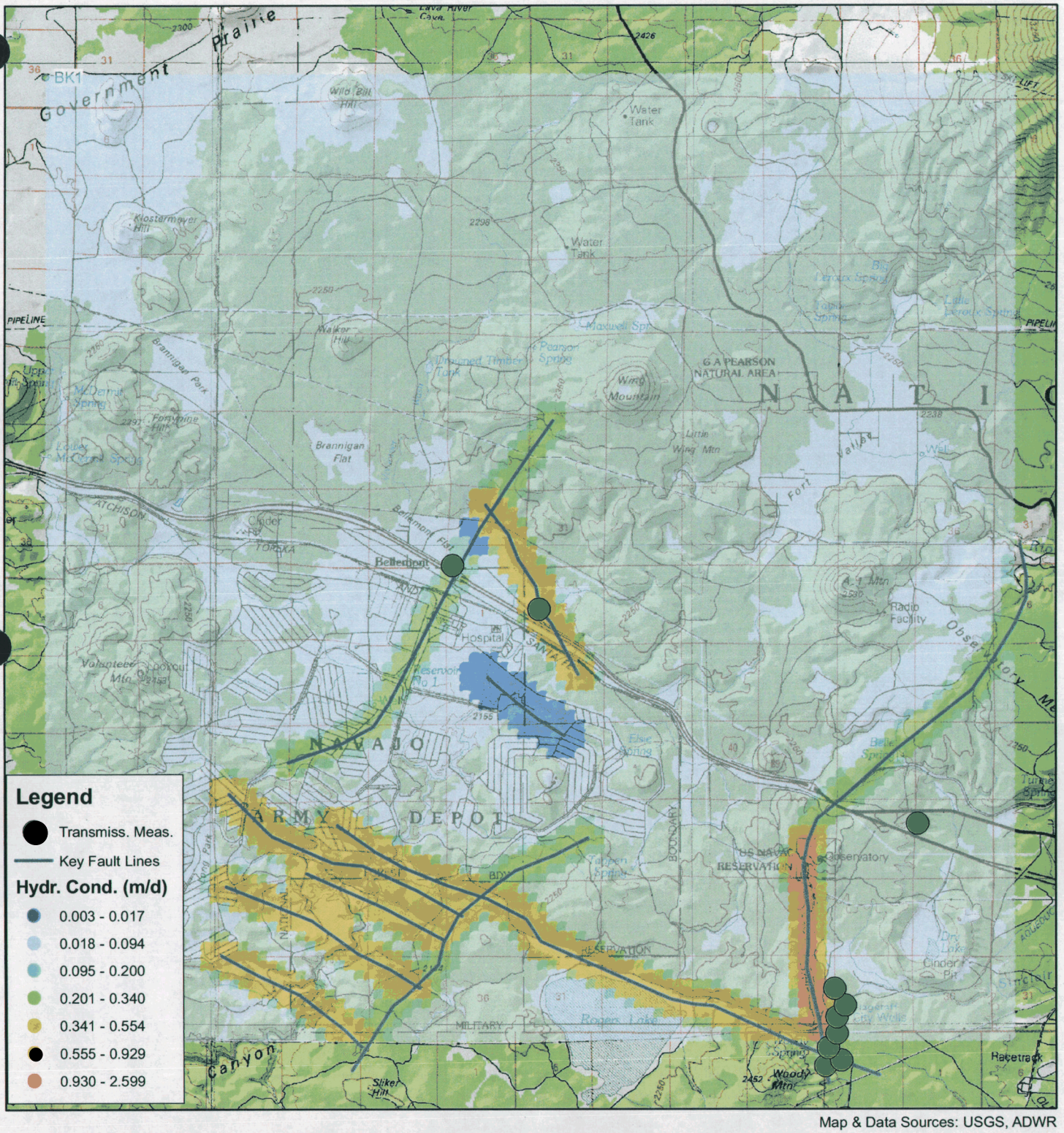

Map & Data Sources: USGS, ADWR

0 950 1,900 3,800 5,700 7,600 Meters

1:107,448

N W E S

HSI HydroSystems Inc.

S:\05-400\PAD Report\Figures\Figure 24.pdf

Figure 25. Steady State Water Level Elevation

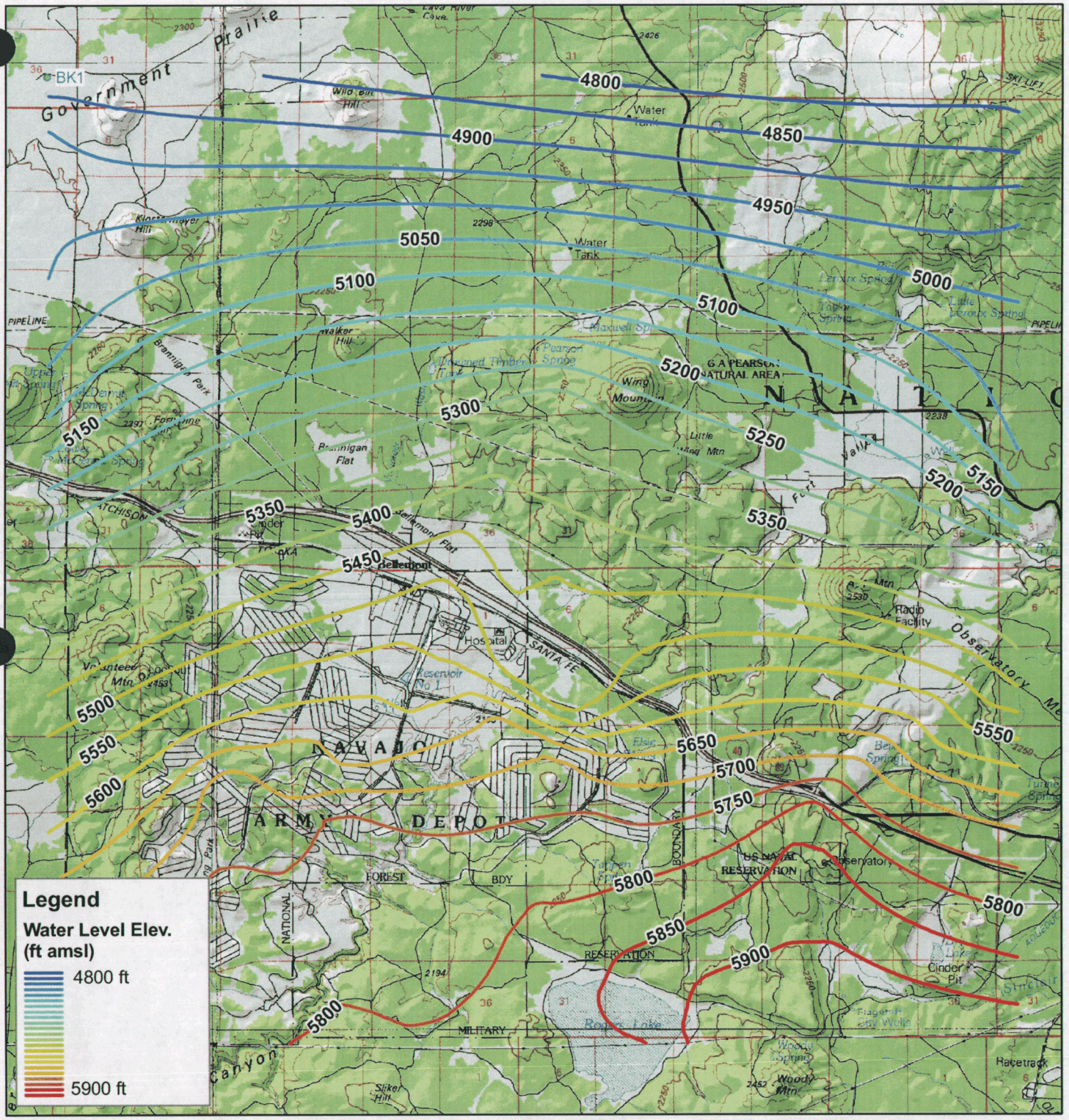

Map & Data Sources: USGS, ADWR

0 950 1,900 3,800 5,700 7,600 Meters

1:107,448

N W E S

HSI HydroSystems Inc.

S:\05-400\PAD Report\Figures\Figure 25.pdf

Figure 26. 100 Year Impact Analysis Results

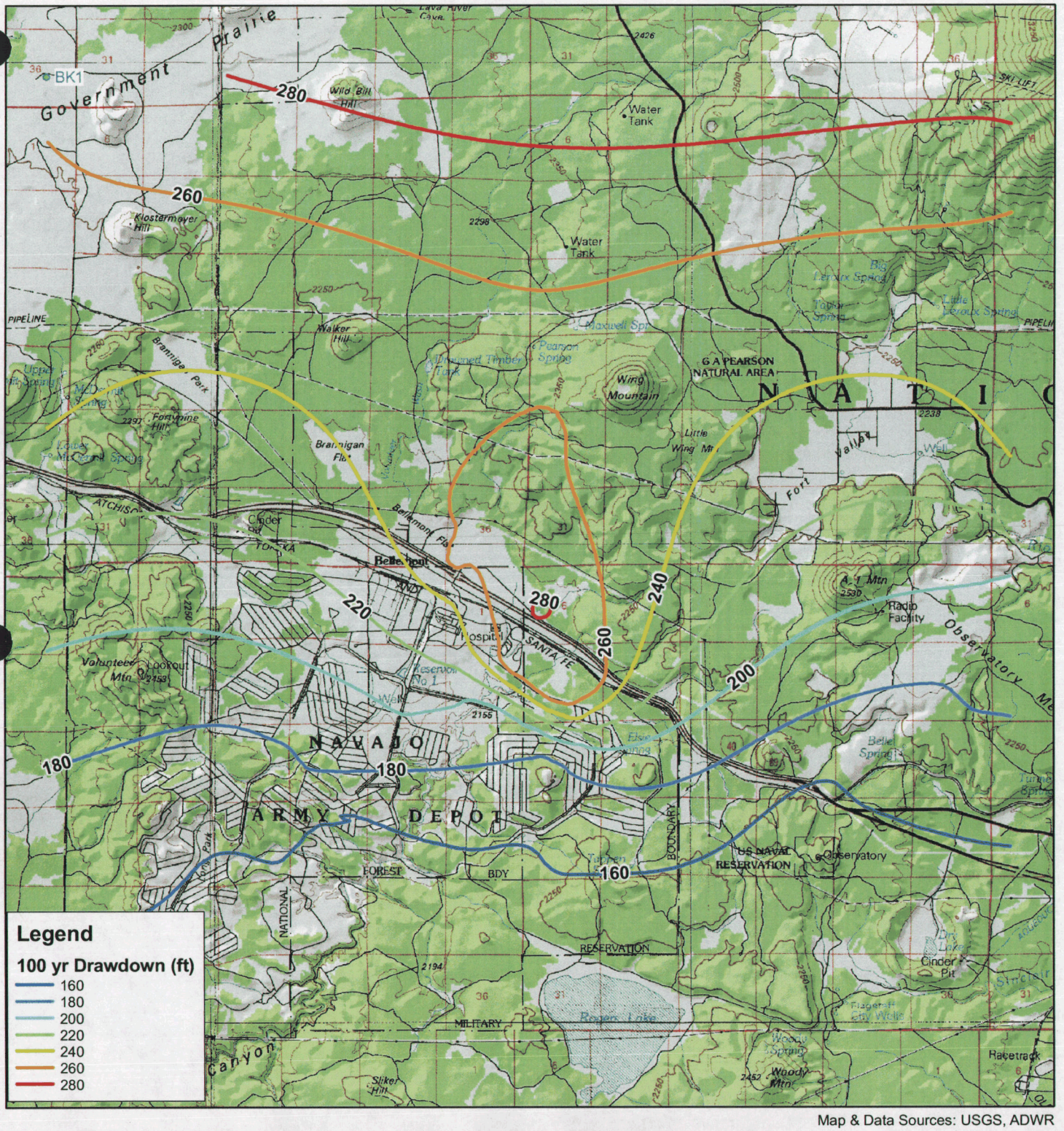

Map & Data Sources: USGS, ADWR

0 950 1,900 3,800 5,700 7,600 Meters

1:107,448

N W E S

HSI HydroSystems Inc.

S:\05-400\PAD Report\Figures\Figure 26.pdf

TABLES

Table 1 - Utility Source
100-Year Projected
Supply Demands

Supply

Supply Sources	Quantity (gpm)	Annual Supply (AF/yr)	100-Year Supply (AF)
Well 1 and 2 (Deep Wells)	35	56	5,646
Well 3 (Deep Well)	72	116	11,614
Well 4 (Deep Well)	371	598	59,800
Sub-Total Deep Well Supply	478	771	77,102
Treated Effluent[1]	185	299	29,858
Total Supplies	663	**1070**	**106,960**

[1]Equates to .9 of residential demand per lot

Demand

Subdivision Name	No. of Lots	Approx Size of lots (sq.ft)	Total Acreage	Projected Water Demand Per Residential Lot (gpd)	Projected Water Demand Per Subdivision (gpm)	Projected Water Demand Per Subdivision (gpd)	Residential Demand	Non-Residential Demands					Annual Demand for the Proposed Subdivision (af/yr)	100-Year Demand for the Proposed Subdivision (af)
							Projected Deep Well Water Demand Per Subdivision (af/yr)	Parks and Lakes served exclusively with Effluent (af/yr)	Commercial[1] (af/yr)	Fire-station[2] (af/yr)	Truck Stop (af/yr)	Hotel (af/yr)		
Phase 1														
Flagstaff Meadows Unit I (current)	91	7500	47	255	16.1	23,205.00	38	27			6	3	74	7,399
Flagstaff Meadows Unit I (committed)	42	7500		255	7.4	10,710.0								
Flagstaff Meadows Unit II (committed)	87	7000	23	255	15.4	22,185.0	25						25	2,485
Flagstaff Meadows Townhomes Unit I (current)	105	3500	11	164	12.0	17,220.0	19						19	1,929
Subtotal	325		81		50.9	73,320.0							118	
Phase 2														
Flagstaff Meadows Unit III (committed)	120	6500	71	255	21.3	30,600.0	34	18	23	1			76	7,578
Flagstaff Meadows Townhomes Unit II (committed)	230	3500		164	26.2	37,720.0	42						42	4,225
Phase 3														
Win-Peters, Inc. (Mobile Home Park)	306		30	255	54.2	78,030.0	87						87	8,740
Northwinds Commerce Park, LLC	30		20		0.0	0.0	0		45				45	4,500
Flagstaff Meadows R.V. Park (commercial demand only)	250		20		0.0	0.0	0		45				45	4,500
Greenfield Land Development Profit Sharing Plan (Townhomes)	100		20	164	11.4	16,400.0	18						18	1,837
Greenfield Land Development Profit Sharing Plan (SF Homes)	50			255	8.9	12,750.0	14						14	1,428
Subtotal	1086		161		121.9	175,500.0								
Total[3]	1411		242		172.8	248,820	279	45		123			**446**	**44,621**

[1]Commercial property in Phase 3 has 10 acres. Commercial property demand is assumed to be 2.25 AF/per acre/yr

[2]Assumes 57 gpcd (10 occupants)
[3]Total values may have rounding errors

Table 2. Flagstaff Meadows
Units I and II
Actual Meter Readings

DATE:	MONTH	NO. OF WATER USERS:	GALLONS USED PER MONTH	AVERAGE DAILY USAGE:
5/1/2004	April	117	457457	135
6/1/2005	May	127	708325	185.9
7/1/2004	June	155	988589	219.9
8/1/2004	July	166	1006224	202.1
9/1/2004	August	183	924981	168.5
10/1/2004	September	190	1078294	195.7
11/1/2004	October	198	918710	149
12/1/2004	November	204	849140	138
1/1/2005	December	204	842630	132
2/1/2005	January	207	905871	140
3/1/2005	February	208	802389	137
4/1/2005	March	208	819920	126
5/1/2005	April	213	965580	150
6/1/2005	May	214	1162670	174
7/1/2005	June	214	1532230	238
8/1/2005	July	214	1695120	255
9/1/2005	August	215	1380990	206
10/1/2005	September	216	1555820	239
11/1/2005	October	216	1203820	179
12/1/2005	November	217	1083560	166

Table 3 - Townhomes
Actual Water Use

DATE:	MONTH	NO. OF WATER USERS:	GALLONS USED PER MONTH	AVERAGE DAILY USAGE:
11/1/2004	October	25	50250	66
12/1/2004	November	47	123386	87
1/1/2005	December	48	109434	73
2/1/2005	January	63	291880	149
3/1/2005	February	77	249340	114
4/1/2005	March	77	310790	129
5/1/2005	April	81	325420	133
6/1/2005	May	81	312270	123
7/1/2005	June	84	327120	129
8/1/2005	July	90	376100	134
9/1/2005	August	105	417440	127
10/1/2005	September	105	346020	109
11/1/2005	October	105	369150	112
12/1/2005	November	105	382410	121

Table 4
Well Summary

Bellemont Shallow Wells Wild Bill Hill Aquifer								
Cadastral Location	Registration Number	Name	Surface Elevation	Depth	Depth to Water	Water Elevation	Date of Measurement	Rate gpm
A(22-5)36ccc	55-598623	E	7135	300	246	6889	01/05/04	10
A(22-5)36ccd	55-559096	A	7135	240	42	7093	02/20/97	7
A(22-5)36ccd	55-564258	B	7135	300	16	7119	07/29/98	12
A(22-5)36ccd	55-515324	D	7135	105	22	7113	07/10/87	5
A(22-5)36cdc	55-503545	C	7135	215	111	7024	09/01/82	10
Bellemont Deep Wells Regional Aquifer								
Cadastral Location	Registration Number	Name	Surface Elevation	Depth	Depth to Water	Water Elevation	Date of Measurement	Rate gpm
A(21-5)11aba	55-594719	CN2	7140	2084	1583	5557	04/15/03	125
A(21-5)11cbc	55-805692	CN1	7043	1647	1408	5635	04/22/04	
A(22-5)26acd			7230	2350	2120	5110	07/01/53	
A(22-5)36ccc	55-598834	Bell-2	7135	2100	1542	5593	09/22/03	23
A(22-5)36cdc	55-593267	Bell-1	7140	2440	1550	5590	05/05/03	11
A(22-5)36ccc	55-203241	Bell-3	7125	2825	1606	5519	08/03/05	72
A(21-6)1cba	55-206887	Bell-4	7160	2908	1675	5485	08/19/05	371

Table 5
Well Development Summary Deep Well 4

Day	Date	Hours (total)	Drawdown (feet)	Average Rate (gallons)	Gallons Pumped (total)	High Sand (ppm)	Low Sand (ppm)	Specific Capacity	Temperature (Fahrenheit)
1	10/11/2005	4.7	50.9	192	53,800	96.86	8.81	3.77	59°
2	10/12/2005	10.8	55.9	192	123,900	91.57	10.57	3.44	
3	10/13/2005	11.0	101.7	268	177,000	33.46	7.04	2.64	59°
4	10/14/2005	9.0	119.4	345	186,100	28.18	0.35	2.89	59°

Table 6. Summary of Drinking Water New Source Results for Deep Wells 3 and 4

Test Group	Parameter		Method	MCL	Well 3 6/30/2004	Well 4 10/31/2005
Field	Water Temperature (°C)		EPA 150.1		18.3	15.5
	pH		EPA 150.1		8.16	7.5
	pH (lab value)		EPA 150.1		8.08	8.08
	Conductivity		SM2510B		207	170
	Specific Conductance (lab value)		SM 2510B		--	180
Metals (mg/L)	Antimony	Sb	EPA 200.9	0.006	<0.0040	<0.0040
	Arsenic	As	EPA 200.9	0.010 as of 1/23/06	0.0060	0.0057
	Barium	Ba	EPA 200.7	2.0	0.47	0.17
	Beryllium	Be	EPA 200.7	0.004	<0.0040	<0.0040
	Cadmium	Cd	EPA 200.7	0.005	<0.0050	<0.0050
	Calcium	Ca	EPA 200.7		21	25
	Chromium	Cr	EPA 200.9	0.1	0.0046	0.004
	Copper	Cu	EPA 200.7	1.3 action level	<0.02	<0.02
	Iron	Fe	EPA 200.7		--	0.22
	Lead	Pb	EPA 200.9	0.015 action level	<0.0020	<0.0020
	Magnesium	Mg	EPA 200.7		13	12
	Manganese	Mn	EPA 200.7		--	<0.020
	Mercury	Hg	EPA 245.1	0.002	<0.00020*	<0.00020
	Nickel	Ni	EPA 200.7		<0.050	<0.050
	Potassium	K	EPA 258.1		--	2.4
	Selenium	Se	EPA 200.9	0.05	<0.0040	<0.0040
	Silica	SiO2	EPA 200.7		--	14
	Sodium	Na	EPA 273.1		--	<5.0
	Sodium	Na	EPA 200.7		4.4	4.9
	Thallium	Tl	EPA 200.9	0.002	<0.0020	<0.0020
	Zinc	Zn	EPA 200.7		--	<0.050
Inorganics (mg/L)	Alkalinity (Total)		SM 2320B		110	84
	Calcium Hardness (CaCO3)		SM 2340B		100	62
	Chloride	Cl	EPA 300		2.3	2.4
	Amenable Cyanide	CN	SM 4500-CN G	0.2	<0.025	<0.020
	Fluoride	F	EPA 300	4.0	0.13	<0.10
	Turbidity		EPA 180.1		--	22
	Langelier Index	LSI	Calculation		--	-0.60
	Nitrate-N	NO3	EPA 300	10	0.22	0.17
	Nitrite-N	NO2	EPA 300	1.0	<0.10	<0.10
	Sulfate	SO4	EPA 300		2.4	1.4
	Total Dissolved Solids	TDS	SM 2540C		120	100
Organics (mg/L)	Volatile Organic Compounds	VOCs	EPA 524.2	multiple	see Chloroform	ND
	Chloroform/Total Trihalomethanes	TTHM	EPA 524.2	0.1	0.0021	ND
	EDB/DBCP		EPA 504.1	multiple	ND	ND
	Other organics by GC/MS		EPA 525.2	multiple	ND*	ND
	Chlorinated Acids		EPA 515	multiple	ND	ND
	Carbamates/Carbamoxyloxime		EPA 531.1	multiple	ND	ND
	Endothall		EPA 548.1	0.1	ND	ND
	Glyphosate		EPA 547	0.7	ND	ND
	Diquat		EPA 549.1	0.02	ND	ND
	Pesticides/PCBs		EPA 508.1	multiple	ND*	ND
	Dioxin (2,3,7,8 - TCDD)		EPA 1613B	0.00000003	ND	ND
Other	Total Coliform		SM 9223B	5% per month	Absent	Absent
	E. Coli		SM 9223B	zero	Absent	Absent
	Asbestos (MFL)		EPA 100.1	7	<0.2	<2.6**
	Gross Alpha Activity (pCi/L)		EPA 600/ 00-02	15	1.9 +/- 0.6	2.4 +/- 0.8
	Gross Beta Activity (pCi/L)		EPA 900.0	4 mrems/yr	--	2.0 +/- 0.4
	Oxygen-18/16 ratio (per mil)				-11.9 +/- 0.08	-11.9 +/- 0.08
	Deuterium/Protium ratio (per mil)				-85 +/- 0.9	-84 +/- 0.9

*Resampled for these parameters on 9/26/04

**High particulate matter prevented lower detection

ND = not detected above reporting limit

PHOTOS

Photo 1: Aluminum foil, salt, and water in hand excavated transmitter dipole site.

Photo 2: Appearance of "ready for use" transmitter dipole site.

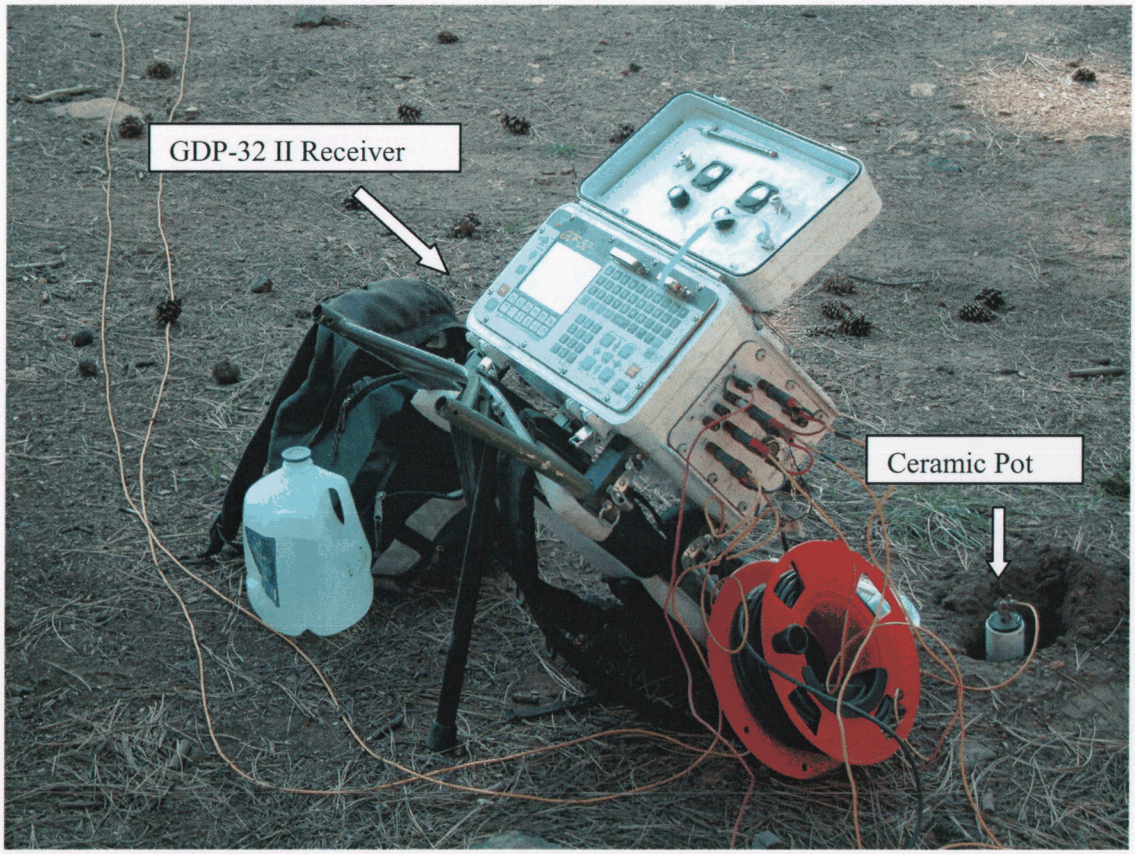

Photo 3: GDP-32II receiver and ceramic pot used for GLD CSAMT survey.

Photo 4: Transmitter truck and portable generator.

Photo 5: Drilling and placement of 16-inch steel casing.

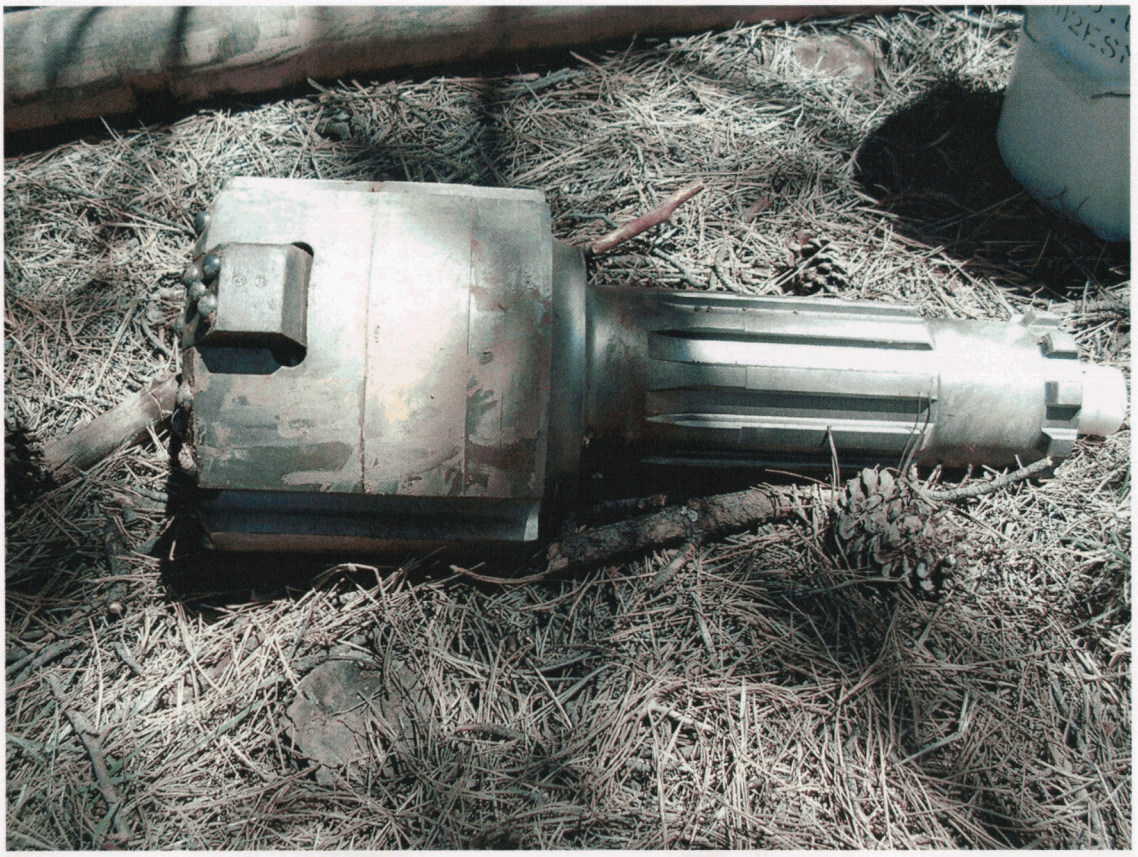

Photo 6: 12-inch under reamer hammer bit with wing extended.

Photo 7: Unexpected groundwater discharge from the well when making a pipe connection.

Photo 8: Groundwater discharge to cyclone.

Photo 9: Additional air system supplied by the Weatherford Company.

Photo 10: Tricone bit missing one cone in deep fracture at 2,908 feet.

Photo 11: Samples collected in 5-foot intervals and placed in cloth bags.

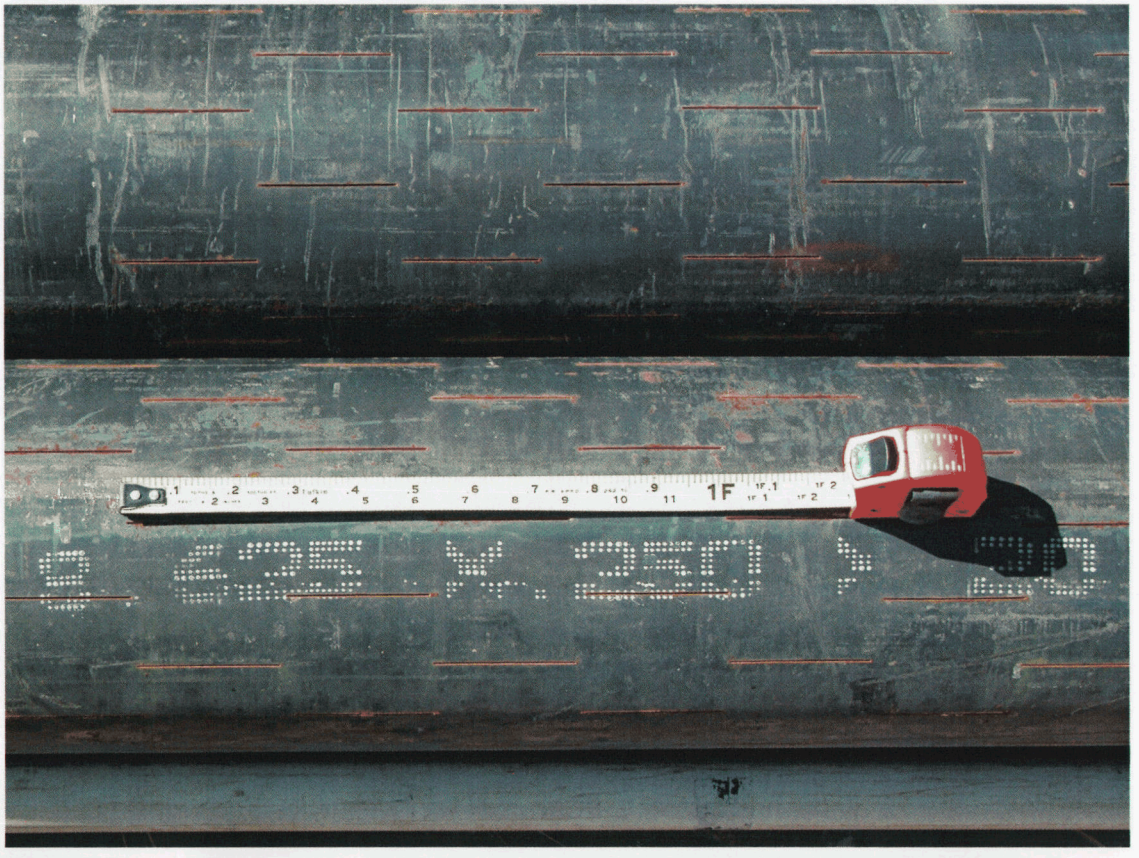

Photo 12: 8-inch slotted casing (4 rows, 9 cuts per foot, 36 slots per foot).

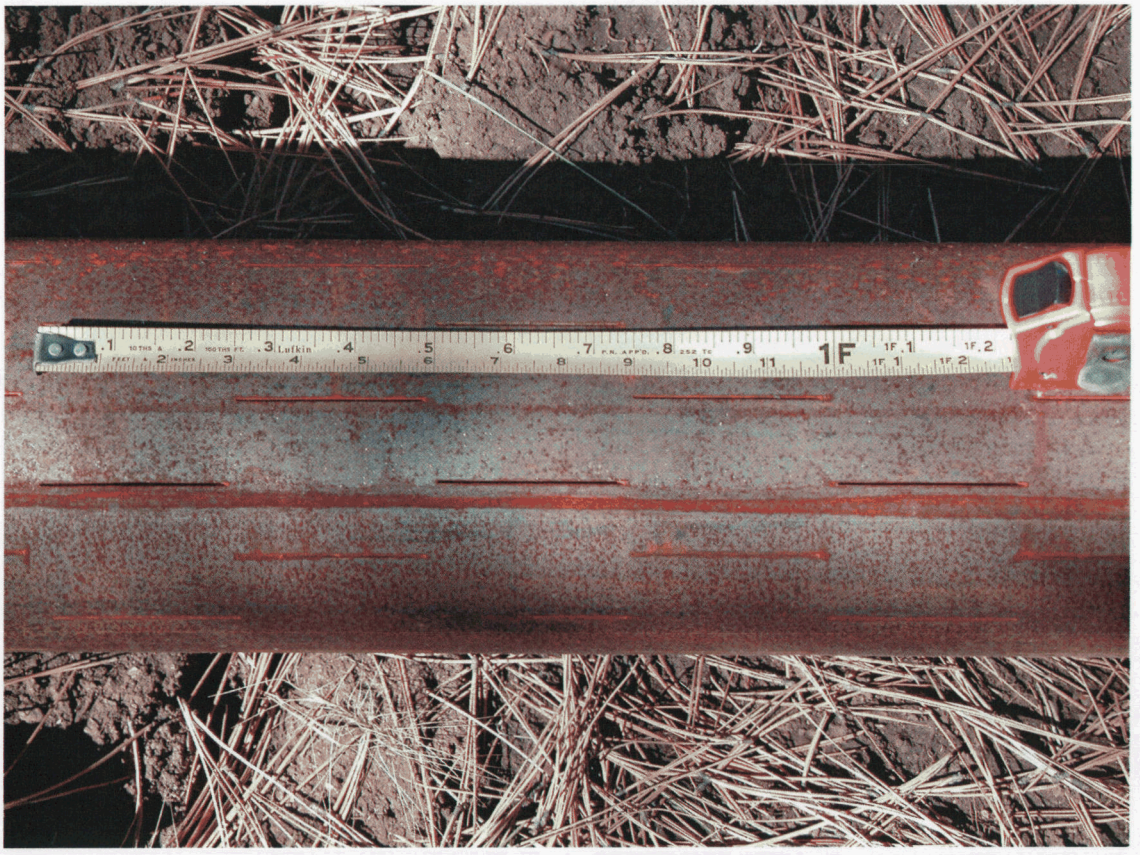

Photo 13: 6-inch slotted casing (4 rows, 8 cuts per foot, 32 slots per foot).

Photo 14: Air lift development from 2,100 feet, flow is estimated over 200 gpm.

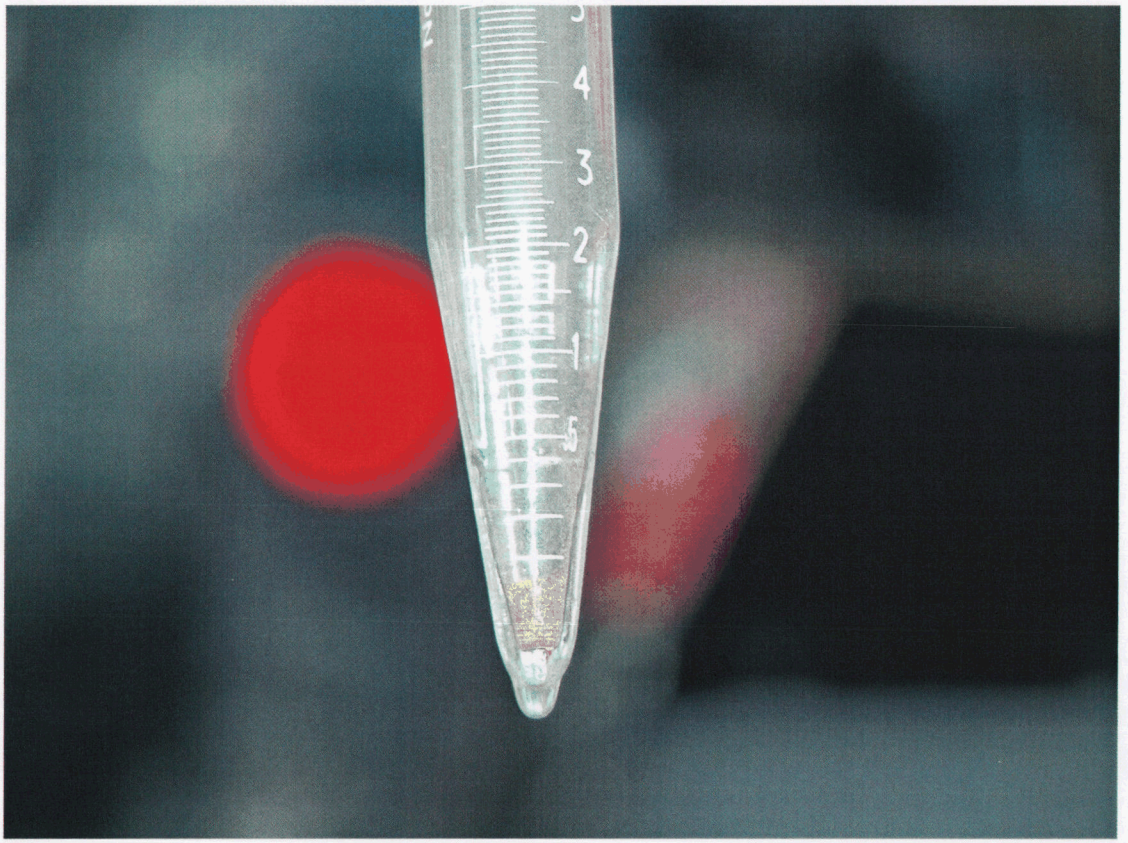

Photo 15: Rossum centrifugal sand sampler, graduated in milliliters.

Photo 16: Setting Centrilift 400 horsepower pump in Deep Well 4.

Photo 17: Centrilift variable frequency drive (VFD).

Photo 18: In-line propeller flow meter showing dial in gpm, and totalizer in gallons.

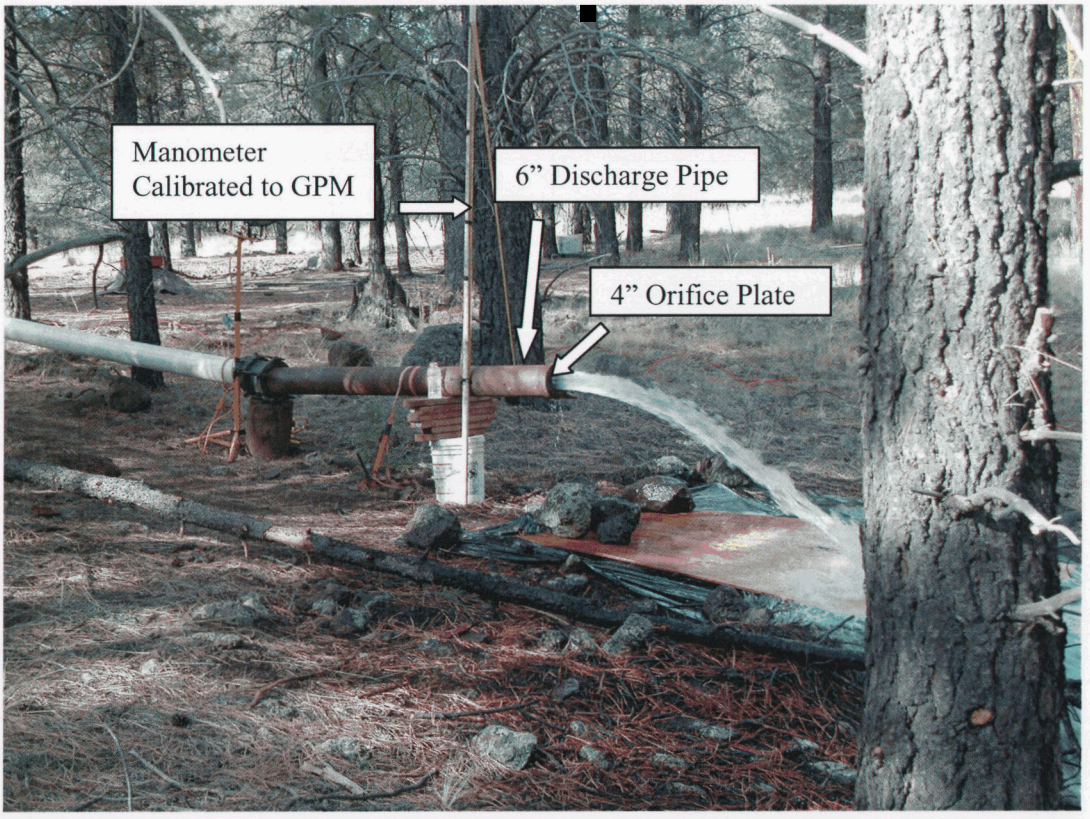

Photo 19: Discharge pipe with 4-inch orifice plate and manometer.

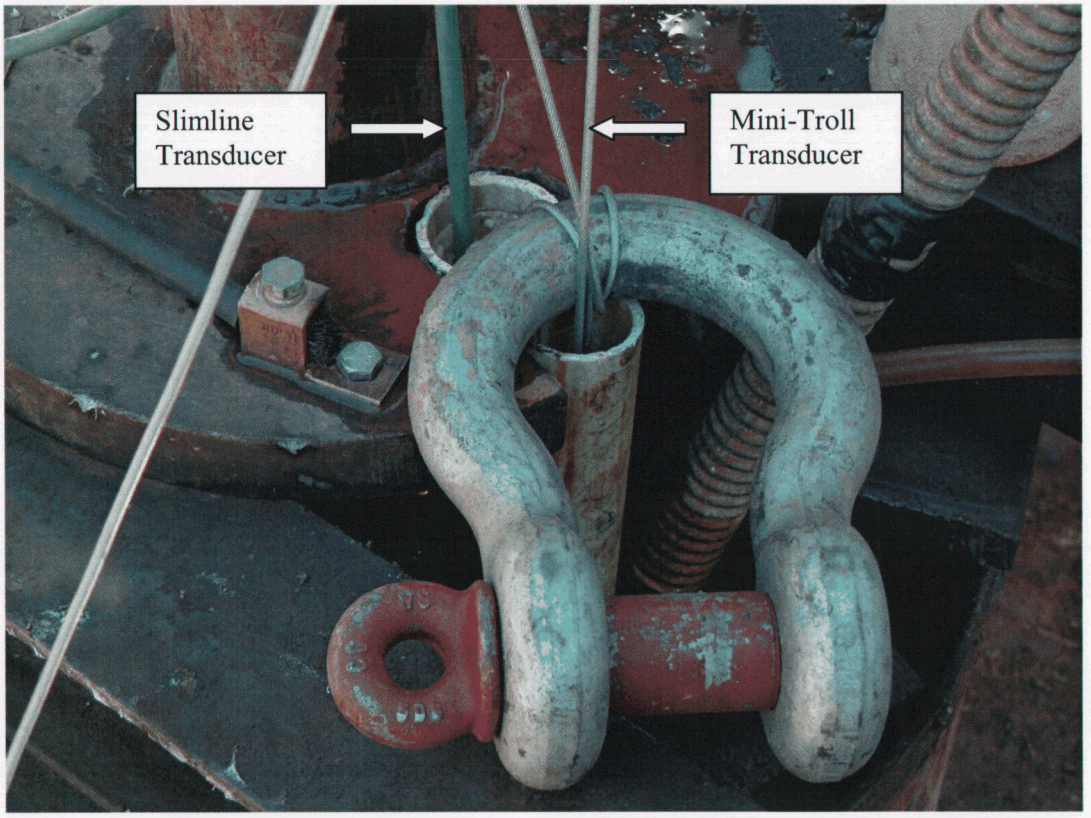

Photo 20: Transducers set in Deep Well 4 sounding tubes.

GRAPHS

Graph 1
Pumping Rate Comparison at Deep Well 4

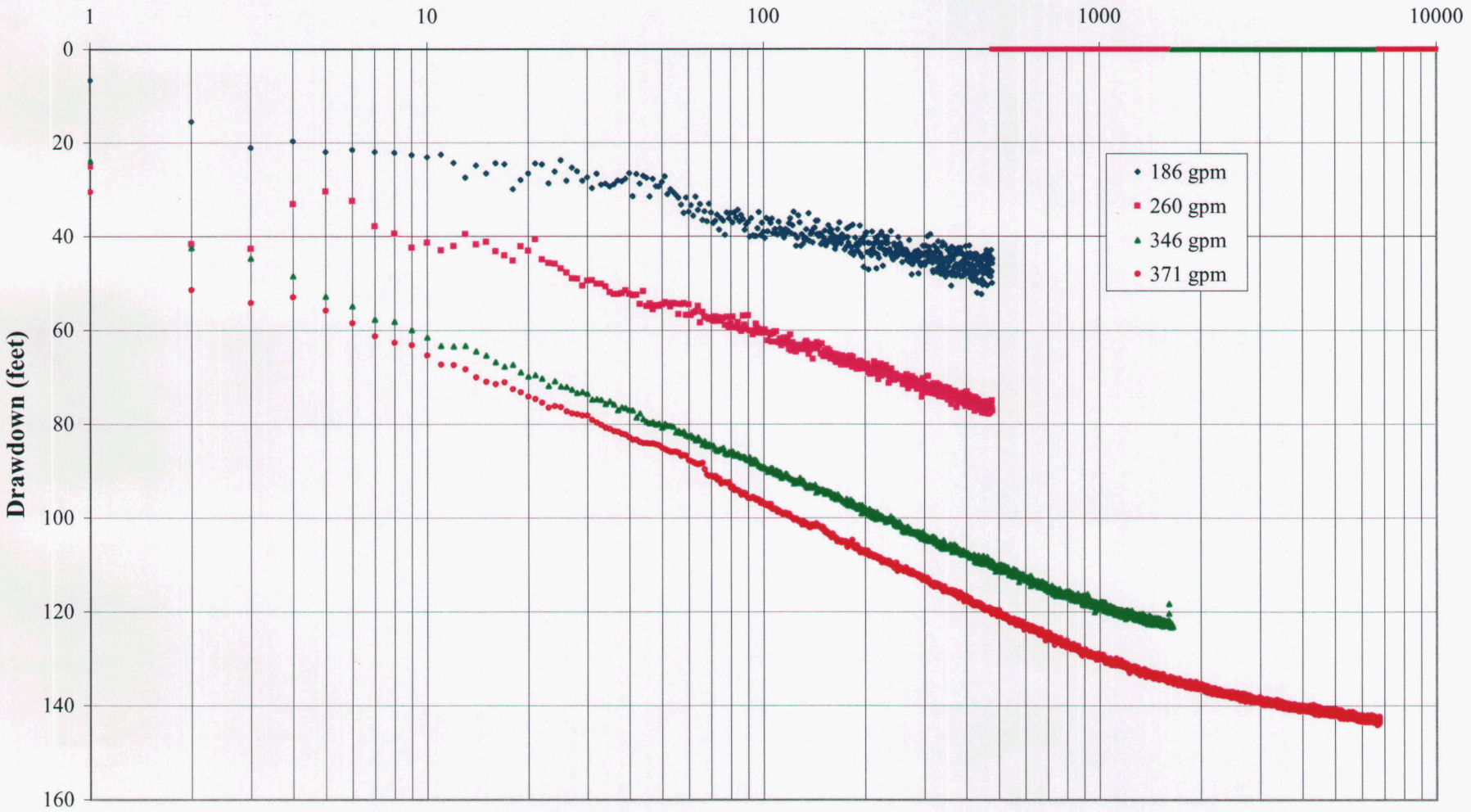

HydroSystems, Inc.
Tempe, Arizona

Utility Source, LLC
Physical Availability Demonstration

Graph 2
Specific Capacity Comparison Deep Well 4

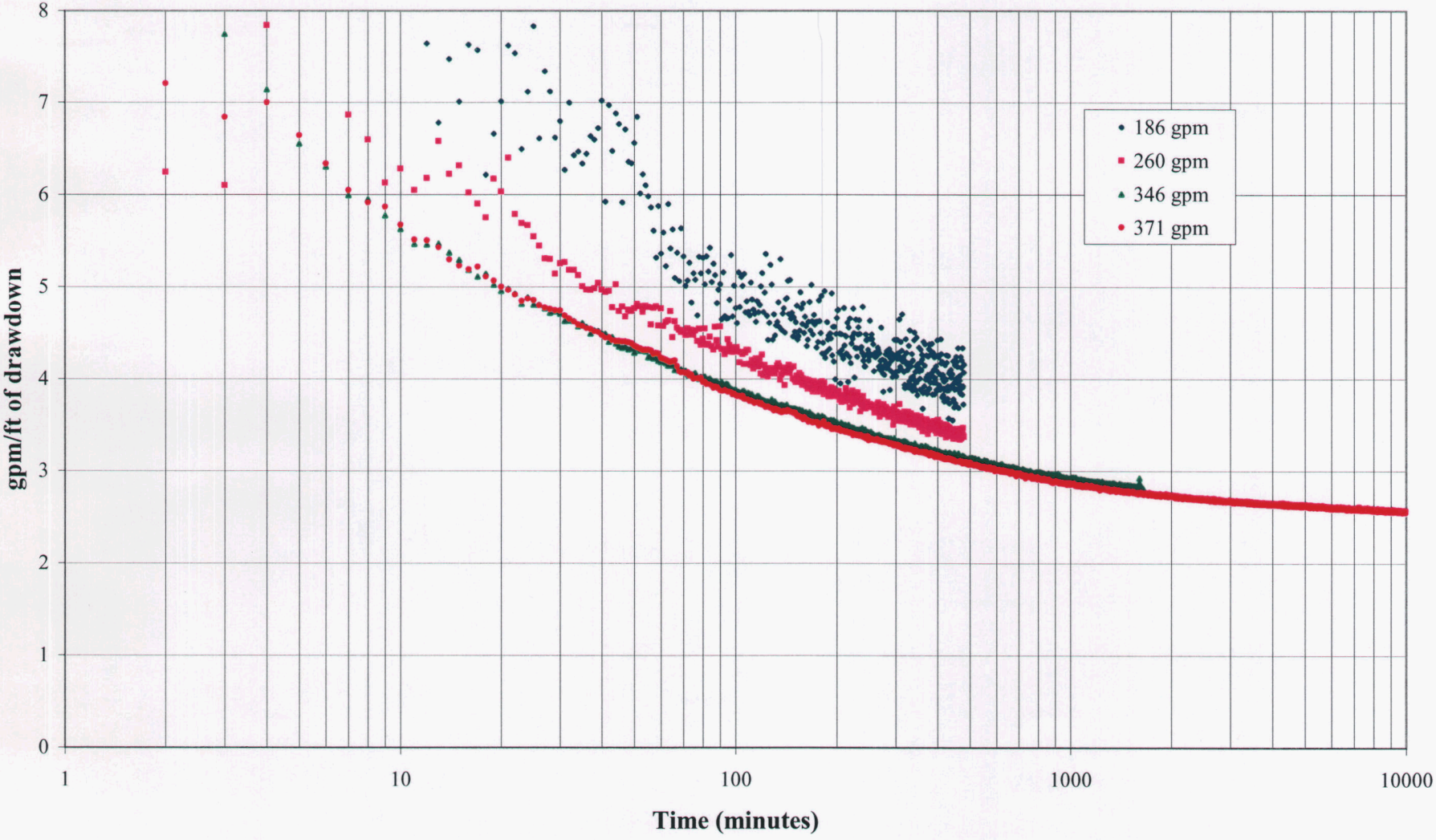

Graph 3
Step 1 Drawdown and Recovery Deep Well 4

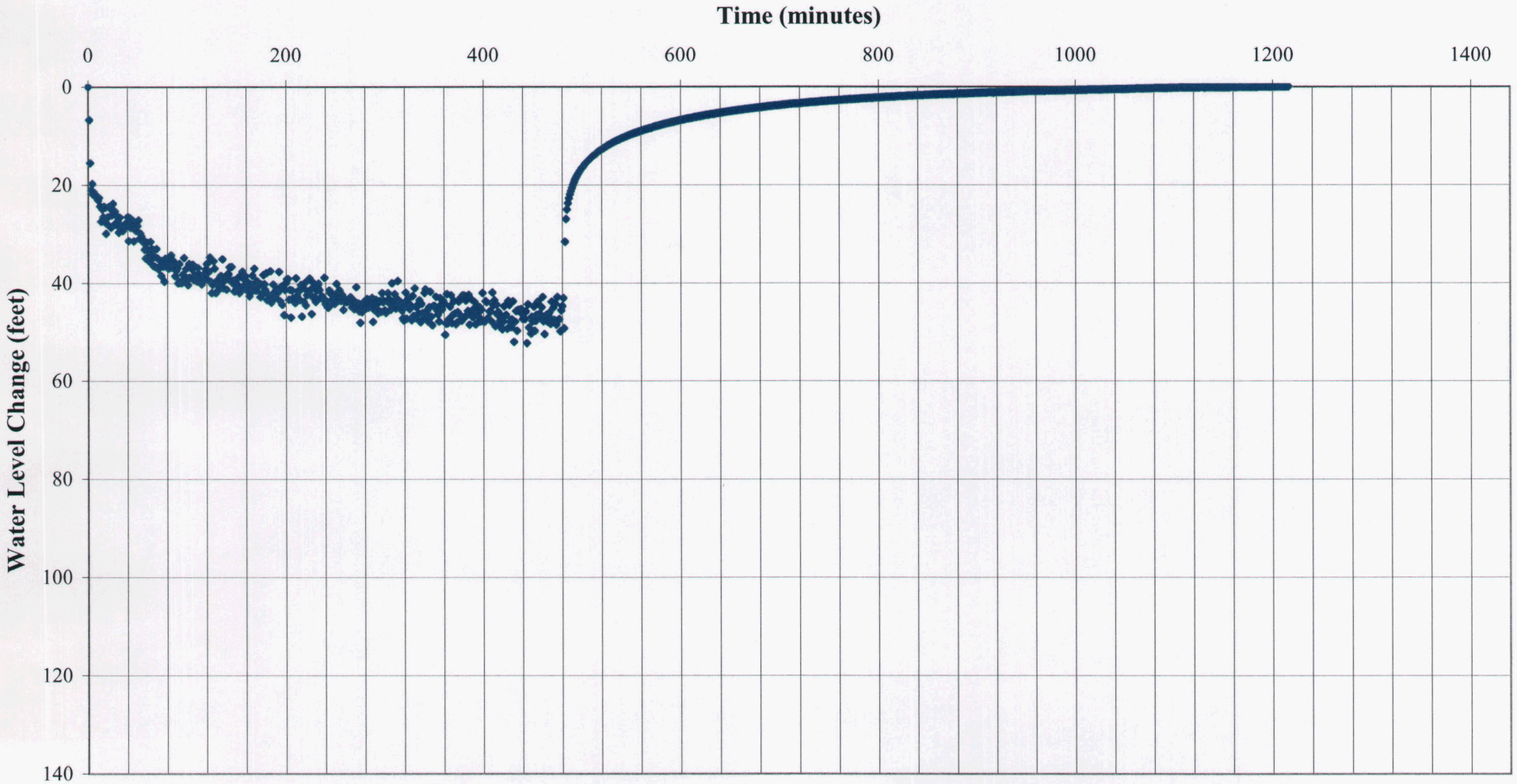

Graph 4
Step 2 Drawdown and Recovery Deep Well 4

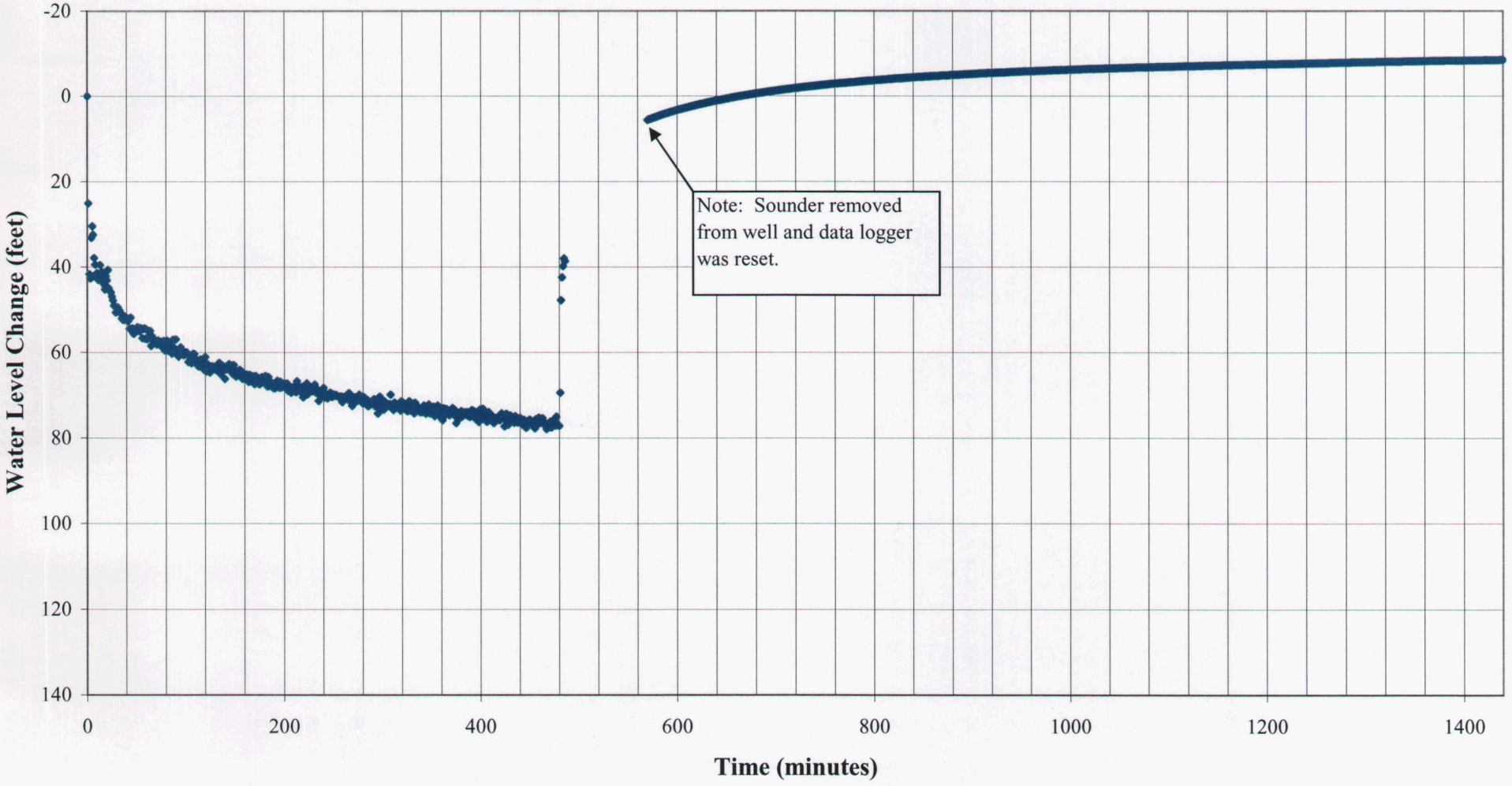

Graph 5
Step 3 Drawdown and Recovery Deep Well 4

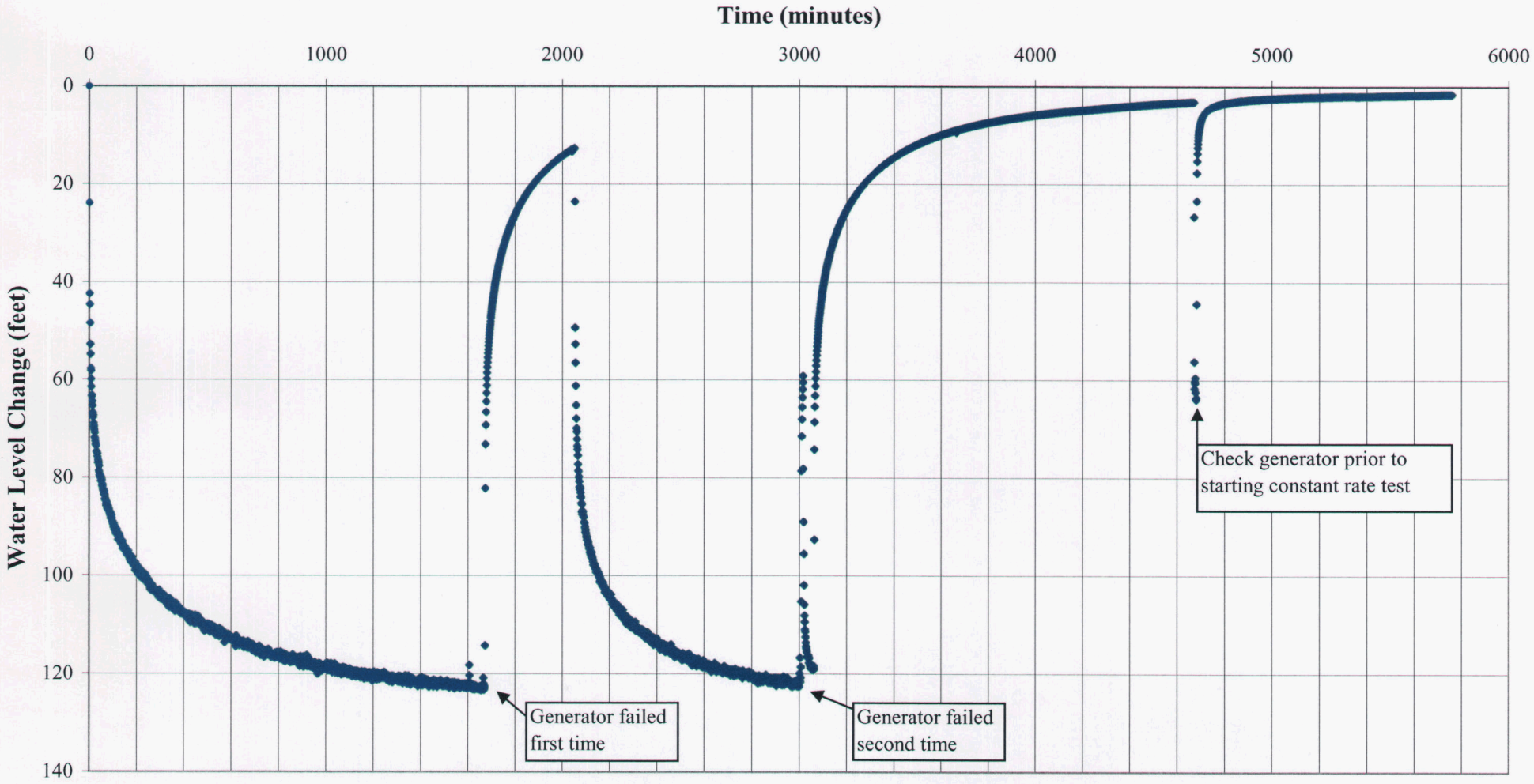

Graph 6
Constant Rate Aquifer Test Drawdown and Recovery Deep Well 4

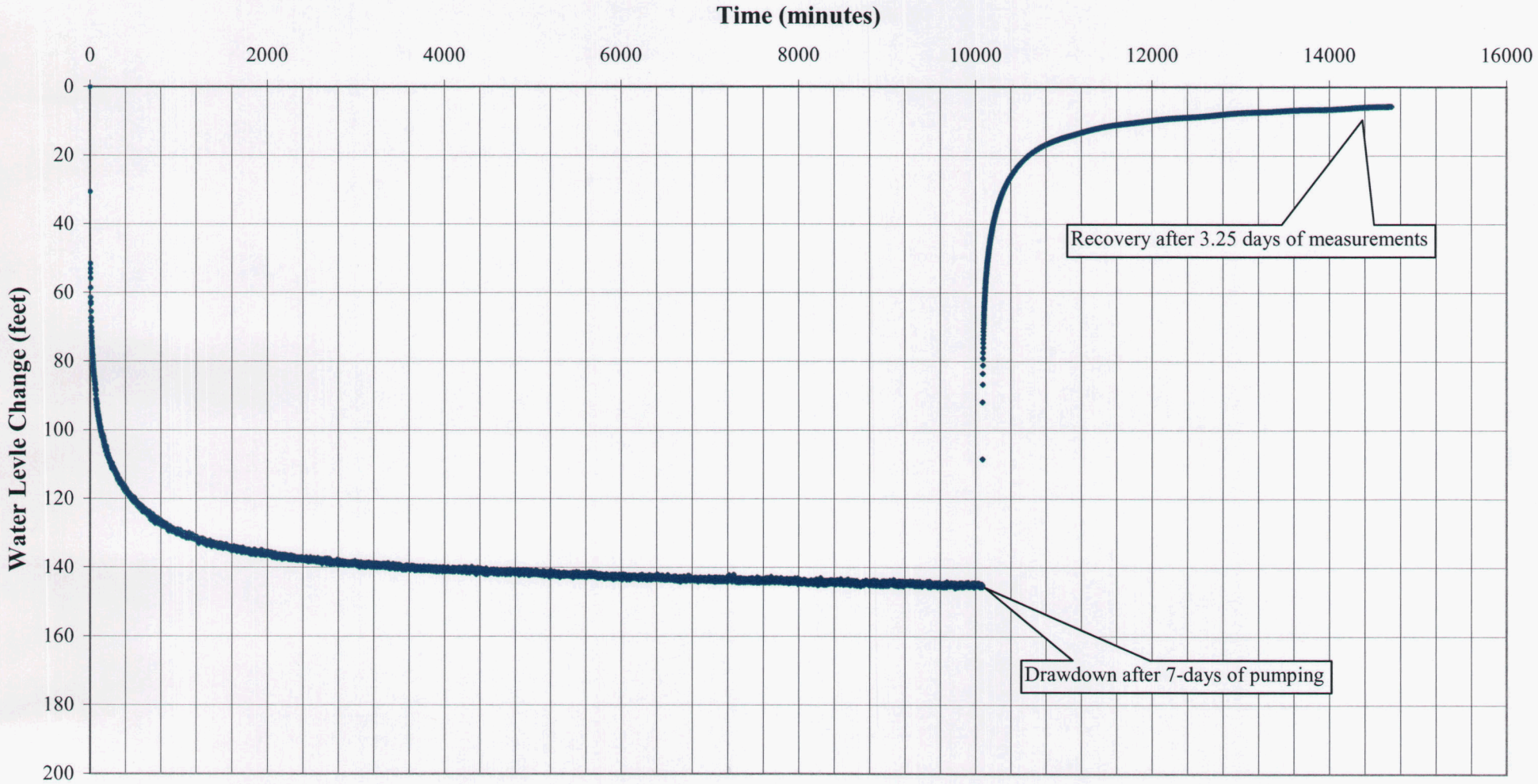

Graph 7
Constant Rate Aquifer Test - Drawdown

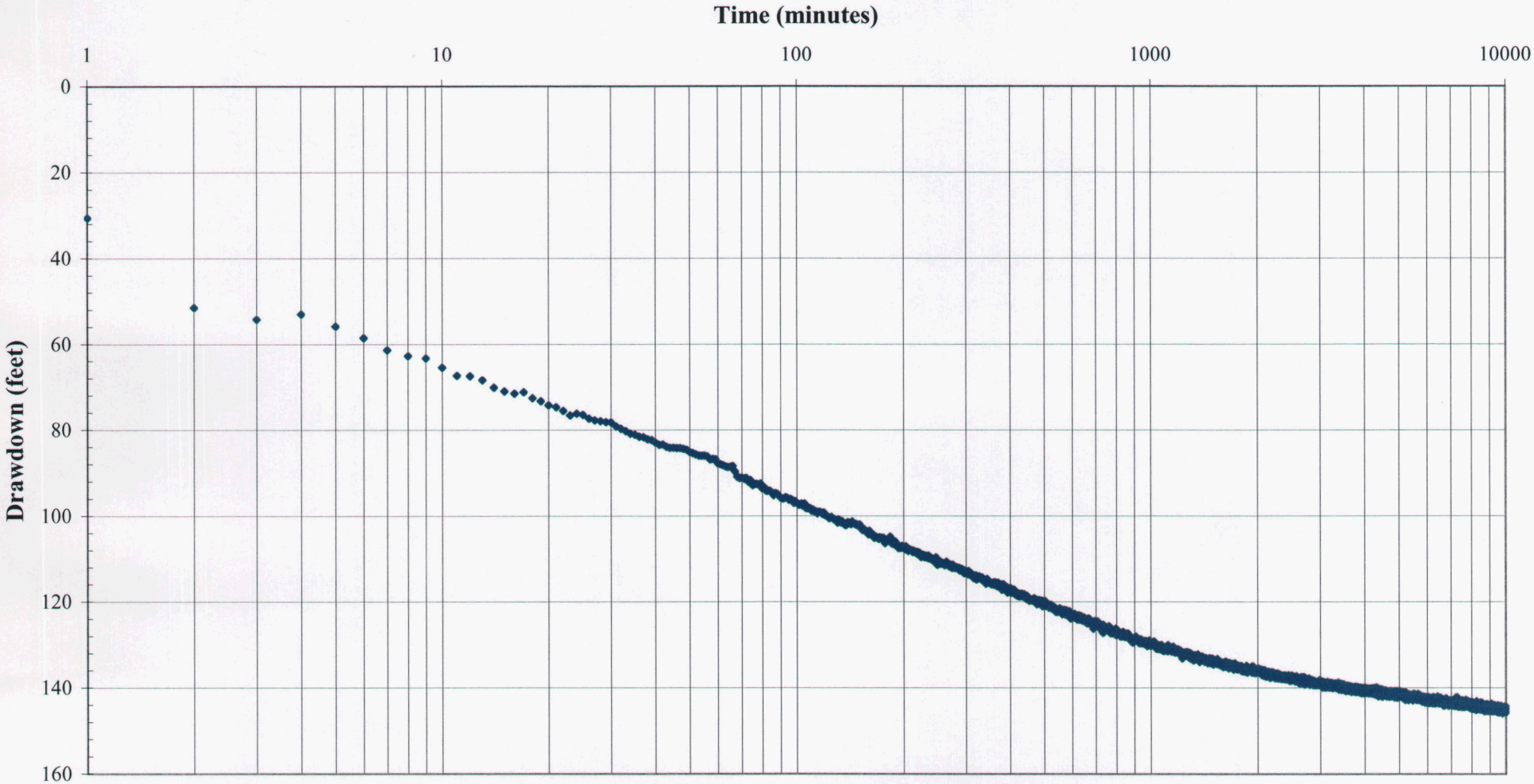

HydroSystems, Inc.
Tempe, Arizona

Utility Source, LLC
Physical Availability Demonstration

Graph 8
Constant Rate Aquifer Test - Recovery

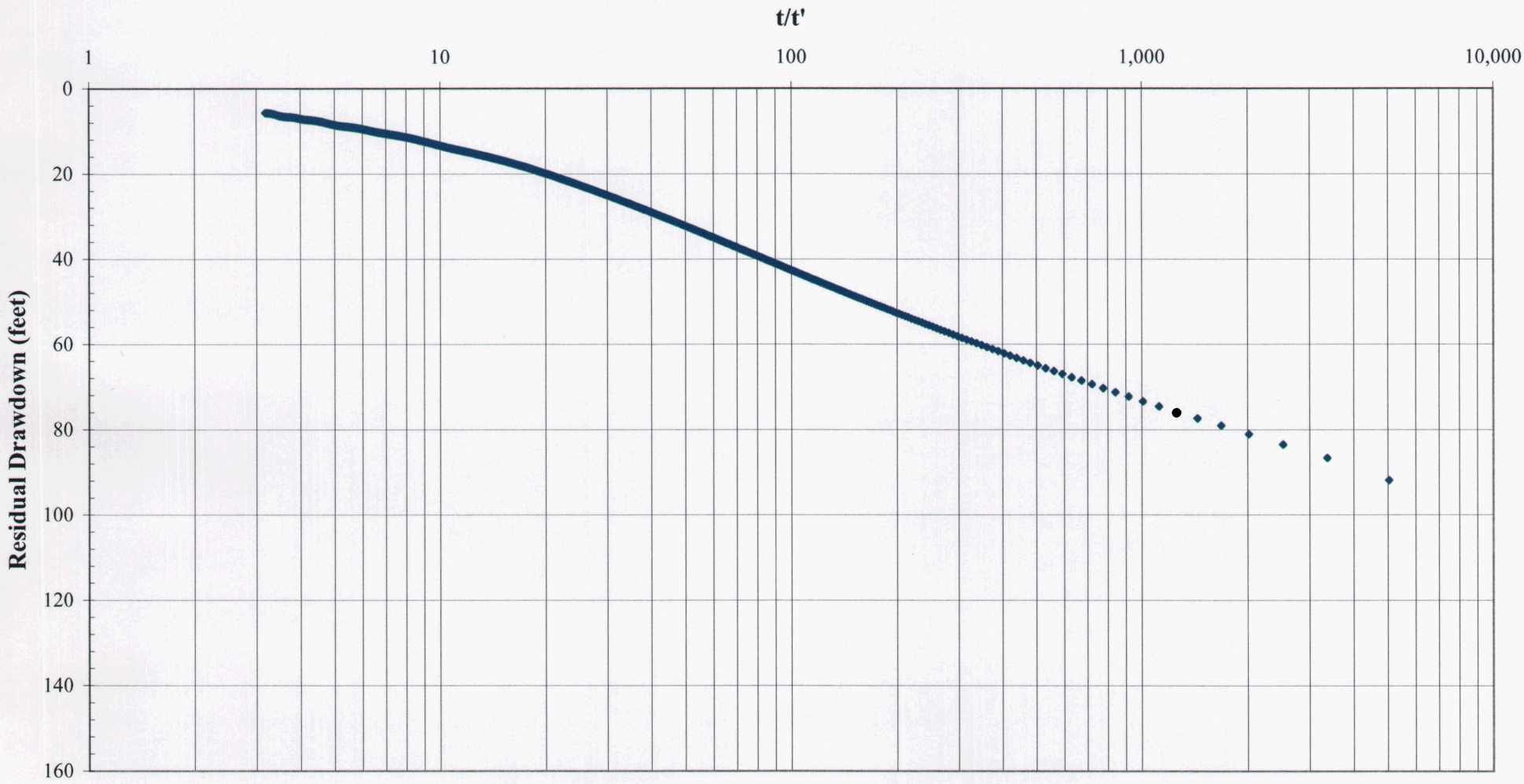

HydroSystems, Inc.
Tempe, Arizona

Utility Source, LLC
Physical Availability Demonstration

Graph 9
Water Level Hydrograph for Deep Well 3

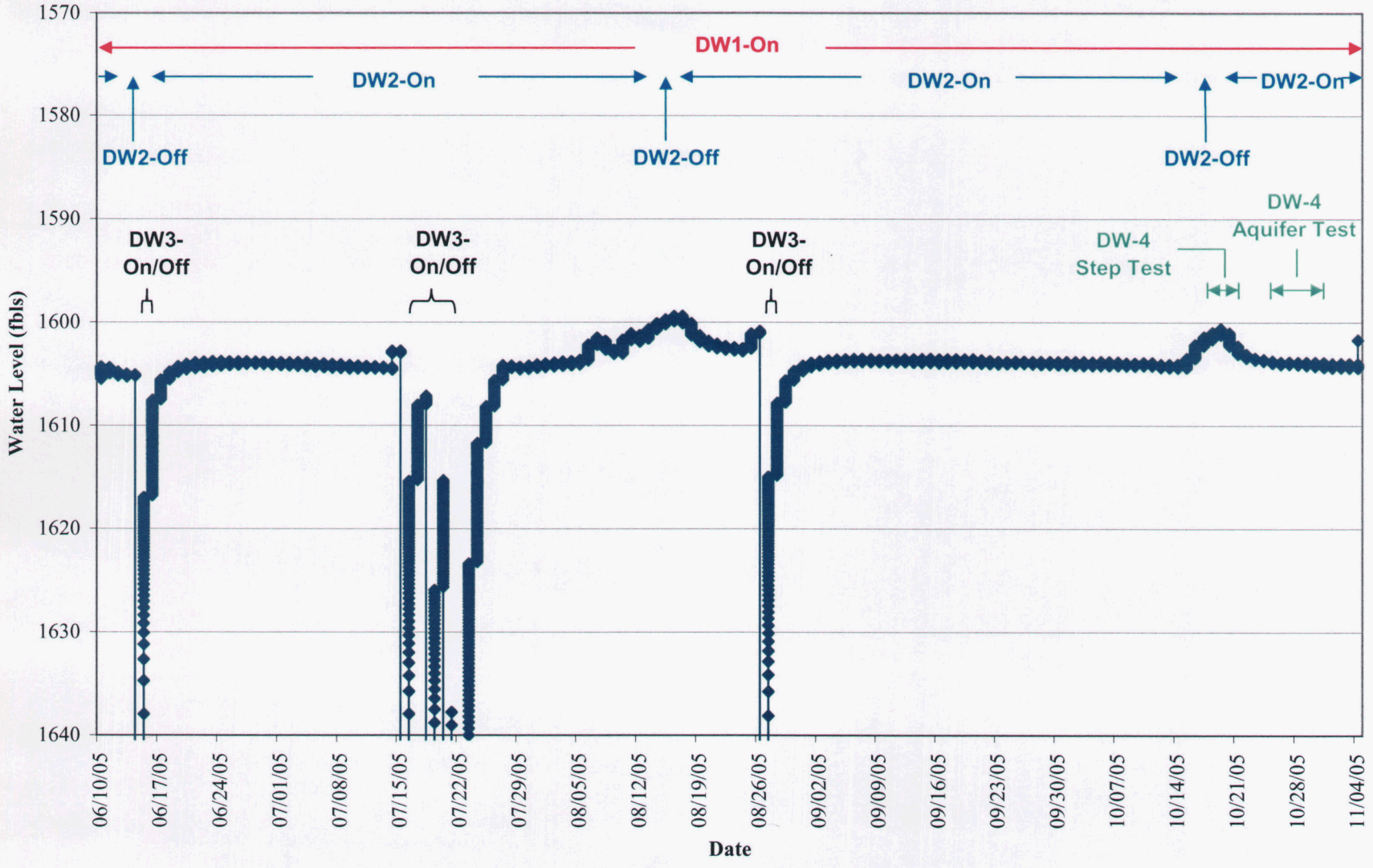

APPENDICES

A

Appendix A

Ownership Details

Greenfield Land Development
721 E. San Pedro
Gilbert, Arizona 85234
Work: 480-892-8756
Fax: 480-892-3387
Toll Free: 866-768-3500

December 9, 2004

Alan Dulaney
Arizona Department of Water Resources
500 N. Third Street
Phoenix, Arizona, 85004

Re: Flagstaff Meadows Units I and II, and Flagstaff Meadows Townhomes Unit I

Dear Alan,

The following information is provided to satisfy the requirements of the Water Adequacy Report Application.

Property Owner: Greenfield Land Development L.L.C.
721 E. San Pedro
Gilbert, Arizona 85234

Greenfield Land Development is a Limited Liability Corporation
Membership: Lonnie McCleve, Member - 80% interest
Gary Bulachek, Member -20% interest

Signatory Authority is granted to both Lonnie McCleve and Gary Bulachek

Water Provider: Utility Source, L.L.C
721 E. San Pedro
Gilbert, Arizona 85234

Utility Source, L.L.C. is a Limited Liability Corporation
Membership: Lonnie McCleve, Member- 80% interest
Gary Bulachek, Member -20% interest

Signatory Authority is granted to both Lonnie McCleve and Gary Bulachek

If you have any other questions or require further clarification, please contact me or Sheila Ehlers at 480-517-9050.

Sincerely,

Lonnie McCleve
Member
Greenfield Land Development LLC

B

Appendix B

Water Use Billing Records for Flagstaff Meadows Units I and II

Mary Ann Parry

From: "Mary Ann Parry" <mparry@cox.net>
To: <shiela@hydrosystems-inc.com>
Sent: Thursday, December 15, 2005 9:07 AM
Subject: averages

Shiela,
The average water usage for Flagstaff Meadows I & II for the month of July 2005 was 255 gallons per day and for August 2005 it was 205 gallons per day. The Townhomes average for July 2005 was 127 and for the month of August 2005 it was 134 gallons per day. I have a funeral to go to and will be tied up most of the afternoon but let me know if you have any questions.
I did speak with Lonnie and 11:00 tomorrow morning would be fine. I already told the receptionist at your office. Mary Ann

To be replaced with hand drawn for final.

Base:	615.60
Water (0-5000):	938.37
Water (5000-15000):	233.23
Water (15000+):	0.00
Water (total):	1171.6
Taxable:	1787.2
Sewer:	1129.56
Tax:	116.69
Homeowners:	4560.00
Payments received:	9944.64
Number of meter readings:	117
Average water usage/lot/day:	135
Number of meter readings (No Builders):	116
Average water usage/lot/day (No Builders):	136
Total new charges:	7593.45
Total old charges:	1217.61
Total water used:	457457

April 2004

Bill totals from 2004-05-01 to 2004-05-31 for plan Flagstaff Meadows:

Base:	758.16
Water (0-5000):	1114.27
Water (5000-15000):	198.29
Water (15000+):	0.00
Water (total):	1312.56
Taxable:	2070.72
Sewer:	1237.37
Tax:	135.36
Homeowners:	4710.00
Payments received:	7021.90
Number of meter readings:	127
Average water usage/lot/day:	185.9
Number of meter readings (No Builders):	126
Average water usage/lot/day (No Builders):	187.4
Total new charges:	8153.45
Total old charges:	1741.11
Total water used:	708325

May 2004

Bill totals from 2004-06-01 to 2004-06-30 for plan Flagstaff Meadows:

Base:	822.96
Water (0-5000):	1330.69
Water (5000-15000):	650.29
Water (15000+):	184.49
Water (total):	2165.47
Taxable:	2988.43
Sewer:	1916.56
Tax:	194.96

June 2004

Utility Statistics

Homeowners:	4590.00
Payments received:	8308.19
Number of meter readings:	155
Average water usage/lot/day:	219.9
Number of meter readings (No Builders):	154
Average water usage/lot/day (No Builders):	221.4
Total new charges:	9689.95
Total old charges:	1324.79
Total water used:	988589

Bill totals from 2004-07-01 to 2004-07-31 for plan Flagstaff Meadows:

Base:	978.48
Water (0-5000):	1577.94
Water (5000-15000):	1012.02
Water (15000+):	480.26
Water (total):	3070.22
Taxable:	4048.7
Sewer:	2632.75
Tax:	264.10
Homeowners:	4620.00
Payments received:	6689.44
Number of meter readings:	166
Average water usage/lot/day:	202.1
Number of meter readings (No Builders):	165
Average water usage/lot/day (No Builders):	203.3
Total new charges:	11565.55
Total old charges:	2915.16
Total water used:	1006224

July 2004

Bill totals from 2004-08-01 to 2004-08-31 for plan Flagstaff Meadows:

Base:	1069.20
Water (0-5000):	1749.73
Water (5000-15000):	1174.17
Water (15000+):	307.84
Water (total):	3231.74
Taxable:	4300.94
Sewer:	2006.16
Tax:	280.54
Homeowners:	4680.00
Payments received:	12166.41
Number of meter readings:	186
Average water usage/lot/day:	165.8

Aug 2004

Number of meter readings (No Builders):	183
Average water usage/lot/day (No Builders):	168.5
Total new charges:	11267.64
Total old charges:	2407.61
Total water used:	924981

Bill totals from 2004-09-01 to 2004-09-30 for plan Flagstaff Meadows:

Base:	1192.32
Water (0-5000):	1713.19
Water (5000-15000):	831.62
Water (15000+):	417.92
Water (total):	2962.73
Taxable:	4155.05
Sewer:	2038.41
Tax:	270.99
Homeowners:	4800.00
Payments received:	4509.42
Number of meter readings:	190
Average water usage/lot/day:	195.7
Number of meter readings (No Builders):	187
Average water usage/lot/day (No Builders):	198.8
Total new charges:	11264.45
Total old charges:	8899.10
Total water used:	1078294

Sept 2004

Usage from 10/2/2004 - 11/2/2004 for pricing plans: Flagstaff Meadows	
Total used:	918710
Number of readings:	198
ater usage per lot per day:	149

Usage from 10/2/2004 - 11/2/2004 for pricing plans: commercial	
Total used:	226200
Number of readings:	2
Water usage per lot per day:	3648

Usage from 10/3/2004 - 11/2/2004 for pricing plans: Town Homes	
Total used:	50250
Number of readings:	25
Water usage per lot per day:	66

Oct 2004

Usage from 11/2/2004 - 12/2/2004 for pricing plans: Flagstaff Meadows	
Total used:	849140
Number of readings:	204
ater usage per lot per day:	138

Usage from 11/2/2004 - 12/2/2004 for pricing plans: commercial	
Total used:	162800
Number of readings:	2
Water usage per lot per day:	2713

Usage from 11/2/2004 - 12/2/2004 for pricing plans: Town Homes	
Total used:	123386
Number of readings:	47
Water usage per lot per day:	87

Nov 2004

Usage from 12/2/2004 - 1/2/2005 for pricing plans: Flagstaff Meadows	
Total used:	842630
Number of readings:	204
Water usage per lot per day:	132

Usage from 12/2/2004 - 1/2/2005 for pricing plans: commercial	
Total used:	208600
Number of readings:	2
Water usage per lot per day:	3364

Usage from 12/2/2004 - 1/2/2005 for pricing plans: Town Homes	
Total used:	109434
Number of readings:	48
Water usage per lot per day:	73

Dec 2004

Usage from 1/2/2005 - 2/2/2005 for pricing plans: Flagstaff Meadows	
Total used:	905871
Number of readings:	207
Water usage per lot per day:	140

Usage from 1/2/2005 - 2/2/2005 for pricing plans: commercial	
Total used:	151600
Number of readings:	2
Water usage per lot per day:	2444

Usage from 1/2/2005 - 2/2/2005 for pricing plans: Town Homes	
Total used:	291880
Number of readings:	63
Water usage per lot per day:	149

Usage from 1/31/2005 - 3/2/2005 for pricing plans: Flagstaff Meadows	
Total used:	802389
Number of readings:	208
ater usage per lot per day:	137

Usage from 2/2/2005 - 3/2/2005 for pricing plans: commercial	
Total used:	227000
Number of readings:	2
Water usage per lot per day:	4053

Feb 2005

Usage from 1/31/2005 - 3/2/2005 for pricing plans: Town Homes	
Total used:	249340
Number of readings:	77
Water usage per lot per day:	114

Usage from 3/2/2005 - 4/2/2005 for pricing plans: Flagstaff Meadows	
Total used:	819920
Number of readings:	208
ater usage per lot per day:	126

Usage from 3/2/2005 - 4/2/2005 for pricing plans: commercial	
Total used:	230700
Number of readings:	2
Water usage per lot per day:	3720

Usage from 3/2/2005 - 4/2/2005 for pricing plans: Town Homes	
Total used:	310790
Number of readings:	77
Water usage per lot per day:	129

March 2005

Usage from 4/2/2005 - 5/2/2005 for pricing plans: Flagstaff Meadows	
Total used:	965580
Number of readings:	213
ater usage per lot per day:	150

Usage from 4/2/2005 - 5/2/2005 for pricing plans: commercial	
Total used:	207300
Number of readings:	2
Water usage per lot per day:	3455

Usage from 4/2/2005 - 5/2/2005 for pricing plans: Town Homes	
Total used:	325420
Number of readings:	81
Water usage per lot per day:	133

Apr. 1 2005

Usage from 5/2/2005 - 6/2/2005 for pricing plans: Flagstaff Meadows	
Total used:	1162670
Number of readings:	214
ater usage per lot per day:	174

Usage from 5/2/2005 - 6/2/2005 for pricing plans: commercial	
Total used:	240200
Number of readings:	2
Water usage per lot per day:	3873

May 2005

Usage from 5/2/2005 - 6/2/2005 for pricing plans: Town Homes	
Total used:	312270
Number of readings:	81
Water usage per lot per day:	123

Usage from 6/2/2005 - 7/2/2005 for pricing plans: Flagstaff Meadows	
Total used:	1532230
Number of readings:	214
ater usage per lot per day:	238

Usage from 6/2/2005 - 7/2/2005 for pricing plans: commercial	
Total used:	332750
Number of readings:	2
Water usage per lot per day:	5545

June 2005

Usage from 6/2/2005 - 7/2/2005 for pricing plans: Town Homes	
Total used:	327120
Number of readings:	84
Water usage per lot per day:	129

Usage from 7/2/2005 - 8/2/2005 for pricing plans: Flagstaff Meadows	
Total used:	1695120
Number of readings:	214
ater usage per lot per day:	255

Usage from 7/2/2005 - 8/2/2005 for pricing plans: commercial	
Total used:	374050
Number of readings:	2
Water usage per lot per day:	6032

July 2005

Usage from 7/2/2005 - 8/2/2005 for pricing plans: Town Homes	
Total used:	376100
Number of readings:	90
Water usage per lot per day:	134

Usage from 8/2/2005 - 9/2/2005 for pricing plans: Flagstaff Meadows	
Total used:	1380990
Number of readings:	215
ater usage per lot per day:	206

Usage from 8/2/2005 - 9/2/2005 for pricing plans: commercial	
Total used:	368300
Number of readings:	2
Water usage per lot per day:	5939

Aug 2005

Usage from 8/2/2005 - 9/2/2005 for pricing plans: Town Homes	
Total used:	417440
Number of readings:	105
Water usage per lot per day:	127

Usage from 9/2/2005 - 10/2/2005 for pricing plans: Flagstaff Meadows	
Total used:	1555820
Number of readings:	216
ater usage per lot per day:	239

Usage from 9/2/2005 - 10/2/2005 for pricing plans: commercial	
Total used:	209200
Number of readings:	2
Water usage per lot per day:	3486

Sept 2005

Usage from 9/2/2005 - 10/2/2005 for pricing plans: Town Homes	
Total used:	346020
Number of readings:	105
Water usage per lot per day:	109

Usage from 10/2/2005 - 11/2/2005 for pricing plans: Flagstaff Meadows	
Total used:	1203820
Number of readings:	216
Water usage per lot per day:	179

Usage from 10/2/2005 - 11/2/2005 for pricing plans: commercial	
Total used:	242400
Number of readings:	2
Water usage per lot per day:	3909

Oct 2005

Usage from 10/2/2005 - 11/2/2005 for pricing plans: Town Homes	
Total used:	369150
Number of readings:	105
Water usage per lot per day:	112

Usage from 11/2/2005 - 12/2/2005 for pricing plans: Flagstaff Meadows	
Total used:	1083560
Number of readings:	217
ater usage per lot per day:	166

Usage from 11/2/2005 - 12/2/2005 for pricing plans: commercial	
Total used:	68400
Number of readings:	2
Water usage per lot per day:	1140

Nov 2005

Usage from 11/2/2005 - 12/2/2005 for pricing plans: Town Homes	
Total used:	382410
Number of readings:	105
Water usage per lot per day:	121

Base:	
Water (0-5000):	29.70
Water (5000-15000):	59.40
Water (15000+):	524.50
Water (total):	613.6
Taxable:	626.56
Sewer:	564.02
Tax:	40.88
Homeowners:	0.00
Payments received:	3322.66
Number of meter readings:	2
Average water usage/lot/day:	3976.4
Number of meter readings (No Builders):	2
Average water usage/lot/day (No Builders):	3976.4
Total new charges:	1231.46
Total old charges:	2963.90
Total water used:	230300

Commercial Data (1 of 3)

Bill totals from 2004-05-01 to 2004-05-31 for plan commercial:

Base:	12.96
Water (0-5000):	29.70
Water (5000-15000):	59.40
Water (15000+):	594.89
Water (total):	683.99
Taxable:	696.95
Sewer:	628.72
Tax:	45.48
Homeowners:	0.00
Payments received:	4195.36
Number of meter readings:	2
Average water usage/lot/day:	4853.3
Number of meter readings (No Builders):	2
Average water usage/lot/day (No Builders):	4853.3
Total new charges:	1371.15
Total old charges:	3705.17
Total water used:	291200

Bill totals from 2004-06-01 to 2004-06-30 for plan commercial:

Base:	20.48
Water (0-5000):	29.70
Water (5000-15000):	59.40
Water (15000+):	722.30
Water (total):	811.4
Taxable:	831.88
Sewer:	779.92
Tax:	54.28

Utility Statistics

2 of 3

Homeowners:	0.00
Payments received:	1371.15
Number of meter readings:	2
Average water usage/lot/day:	4282.8
Number of meter readings (No Builders):	2
Average water usage/lot/day (No Builders):	4282.8
Total new charges:	1666.08
Total old charges:	949.91
Total water used:	248400

Bill totals from 2004-07-01 to 2004-07-31 for plan commercial:

Base:	28.00
Water (0-5000):	29.70
Water (5000-15000):	59.40
Water (15000+):	648.65
Water (total):	737.75
Taxable:	765.75
Sewer:	678.13
Tax:	49.96
Homeowners:	0.00
Payments received:	
Number of meter readings:	2
Average water usage/lot/day:	5516.7
Number of meter readings (No Builders):	2
Average water usage/lot/day (No Builders):	5516.7
Total new charges:	1493.84
Total old charges:	1730.08
Total water used:	331000

Bill totals from 2004-08-01 to 2004-08-31 for plan commercial:

Base:	28.00
Water (0-5000):	29.70
Water (5000-15000):	59.40
Water (15000+):	893.97
Water (total):	983.07
Taxable:	1011.07
Sewer:	551.87
Tax:	65.97
Homeowners:	0.00
Payments received:	3190.57
Number of meter readings:	2
Average water usage/lot/day:	4565

Utility Statistics

Number of meter readings (No Builders):	2
Average water usage/lot/day (No Builders):	4565
Total new charges:	1628.91
Total old charges:	33.35
Total water used:	273900

Bill totals from 2004-09-01 to 2004-09-30 for plan commercial:

Base:	28.00
Water (0-5000):	29.70
Water (5000-15000):	59.40
Water (15000+):	724.39
Water (total):	813.49
Taxable:	841.49
Sewer:	551.87
Tax:	54.91
Homeowners:	0.00
Payments received:	
Number of meter readings:	2
Average water usage/lot/day:	5100
Number of meter readings (No Builders):	2
Average water usage/lot/day (No Builders):	5100
Total new charges:	1448.27
Total old charges:	1662.26
Total water used:	295800

C

Appendix C

Year 2000 Data from the U.S. Census Bureau for Coconino County

FACT SHEET

Coconino County, Arizona

Highlights from the Census 2000 Demographic Profiles:

General Characteristics - show more >>	Number	Percent	U.S.		
Total population	116,320	100.0	100%	map	brief
Male	58,061	49.9	49.1%	map	brief
Female	58,259	50.1	50.9%	map	brief
Median Age (years)	29.6	(X)	35.3	map	brief
Under 5 years	8,444	7.3	6.8%	map	
18 years and over	82,895	71.3	74.3%		
65 years and over	8,143	7.0	12.4%	map	brief
One race - Total	113,576	97.6	97.6%		
White	73,381	63.1	75.1%	map	brief
Black or African American	1,215	1.0	12.3%	map	brief
American Indian and Alaska Native	33,161	28.5	0.9%	map	brief
Asian	910	0.8	3.6%	map	brief
Native Hawaiian and Other Pacific Islander	108	0.1	0.1%	map	brief
Some other race	4,801	4.1	5.5%	map	
Two or more races	2,744	2.4	2.4%	map	brief
Hispanic or Latino (of any race)	12,727	10.9	12.5%	map	brief
Average household size	2.80	(X)	2.59	map	brief
Average family size	3.36	(X)	3.14	map	
Total housing units	53,443	100.0	100.0%	map	
Occupied housing units	40,448	75.7	91.0%		brief
Owner-occupied housing units	24,835	61.4	66.2%	map	
Renter-occupied housing units	15,613	38.6	33.8%	map	brief
Vacant housing units	12,995	24.3	9.0%	map	

Social Characteristics - show more >>	Number	Percent	U.S.		
Population 25 years and over	65,976	100.0			
High school graduate or higher	55,272	83.8	80.4%	map	brief
Bachelor's degree or higher	12,316	29.9	24.4%	map	
Civilian veterans (civilian population 25 years and older)	9,712	11.7	12.7%	map	brief
Disability Status (population 21 to 64 years)	11,668	17.2	19.2%	map	brief
Foreign Born	5,051	4.3	11.1%	map	brief
Now Married (population 15 years and over)	44,165	49.7	54.4%		brief
Speak a language other than English at home (5 years and older)	30,401	28.2	17.9%	map	brief

Economic Characteristics - show more >>	Number	Percent	U.S.		
In Labor Force (16 years and older)	59,688	68.6	63.9%		brief
Mean travel time to work in minutes (16 years and older)	19.0	(X)	25.5	map	
Median household income (dollars)	38,256	(X)	41,994	map	
Median family income (dollars)	45,873	(X)	50,046	map	
Per capita income (dollars)	17,139	(X)	21,857	map	
Families below poverty level	3,549	13.1	9.2%	map	brief
Individuals below poverty level	20,609	18.2	12.4%	map	

Housing Characteristics - show more >>	Number	Percent	U.S.		
Single-family owner-occupied homes	18,195	100.0			
Median value (dollars)	142,500	(X)	119,600	map	brief
Median of selected monthly owner costs	(X)	(X)			
With a mortgage	1,125	(X)	1,088	map	
Not mortgaged	225	(X)	295		

D

Appendix D

Bellemont Well Logs

ARIZONA DEPARTMENT OF WATER RESOURCES
Records Management Section
500 N. 3rd Street * Phoenix, Arizona 85004
(602) 417-2405 * (800) 352-8488
www.water.az.gov

Well Driller Report and Well Log

RECEIVED
JAN 2 9 2004
Information Management

- Review instructions prior to completing form
- This report should be prepared by the driller in detail and filed with the Department within 30 days following completion of the well.

** PLEASE PRINT CLEARLY **

FILE NUMBER: A(22-5) 36 CCC
WELL REGISTRATION NUMBER: 55- 598623
PERMIT NUMBER (IF ISSUED):

SECTION 1: REGISTRY INFORMATION

Well Owner

FULL NAME OF COMPANY, ORGANIZATION OR INDIVIDUAL: FUELCO
MAILING ADDRESS: 721 E SAN PEDRO
CITY / STATE / ZIP: GILBERT, AZ 85234
CONTACT PERSON NAME AND TITLE:
TELEPHONE NUMBER: 480-892-8756
FAX:

Location of Well

WELL LOCATION ADDRESS (IF KNOWN): I-40 Exit 185

TOWNSHIP (N/S)	RANGE (E/W)	SECTION	160 ACRE	40 ACRE	10 ACRE
22N	5E	36	SW 1/4	SW 1/4	SW 1/4

LATITUDE: 35° | 14 | 23 "N
LONGITUDE: 111° | 49 | 33 "W
LAND SURFACE ELEVATION AT WELL: 7093 Feet Above Sea Level
METHOD OF LATITUDE / LONGITUDE (CHECK ONE): ☒ Hand-Held ☐ USGS Quad Map ☐ Conventional Survey ☒ GPS: ☐ Survey-Grade
COUNTY ASSESSOR'S PARCEL ID NUMBER: BOOK 203 | MAP 47 | PARCEL 003A
COUNTY WHERE WELL IS LOCATED: Coconino

SECTION 2: DRILLING AUTHORIZATION

Drilling Firm

NAME: FLAGSTAFF WELL AND SUPPLY COMPANY, INC.
WR LICENSE NUMBER:
TELEPHONE NUMBER: 928-774-8243
FAX:

SECTION 3: WELL CONSTRUCTION DETAILS

DATE WELL CONSTRUCTION STARTED: 11-5-03
DATE WELL CONSTRUCTION COMPLETED: 1-5-04
IF FLOWING WELL, METHOD OF FLOW REGULATION: ☐ Valve ☐ Other

Drill Method

CHECK ONE
- ☒ Air Rotary
- ☐ Bored or Augered
- ☐ Cable Tool
- ☐ Dual Rotary
- ☐ Mud Rotary
- ☐ Reverse Circulation
- ☐ Driven
- ☐ Jetted
- ☐ Air Percussion / Odex Tubing
- ☐ Other (please specify)

Method of Well Development

CHECK ONE
- ☒ Airlift
- ☐ Bail
- ☐ Surge Back
- ☐ Surge Pump
- ☐ Other (please specify)

Method of Sealing at Reduction Points

CHECK ONE
- ☐ None
- ☐ Packed
- ☐ Swedged
- ☒ Welded
- ☐ Other (please specify)

Water Level Information

STATIC WATER LEVEL: 246 Feet Below Land Surface
DATE MEASURED: 1-5-04

ANSWERED FEB - 2 2004

55-55-10/01 (Rev.)

SHALLOW AQUIFER
A(22-5)36 CCC
WELL E

Well Driller Report and Well Log

WELL REGISTRATION NUMBER
55- 598623

SECTION 4. WELL CONSTRUCTION DESIGN (AS BUILT) (attach additional page if needed)

Borehole

DEPTH FROM SURFACE FROM (feet)	DEPTH FROM SURFACE TO (feet)	BOREHOLE DIAMETER (inches)
0	20	16"
20	70	12"
70	300	8"

Installed Casing

DEPTH FROM SURFACE FROM (feet)	DEPTH FROM SURFACE TO (feet)	OUTER DIAMETER (inches)	MATERIAL TYPE (X) STEEL	PVC	ABS	IF OTHER TYPE, DESCRIBE	PERFORATION TYPE (X) BLANK OR NONE	WIRE WRAP	SHUTTER SCREEN	MILLS KNIFE	SLOTTED	IF OTHER TYPE, DESCRIBE	SLOT SIZE IF ANY (inches)
0	70	6"	X				X						
70	300	6"	X								X		1/8"

Installed Annular Material

DEPTH FROM SURFACE FROM (feet)	DEPTH FROM SURFACE TO (feet)	ANNULAR MATERIAL TYPE (X) NONE	CONCRETE	NEAT CEMENT OR CEMENT GROUT	CEMENT-BENTONITE GROUT	BENTONITE GROUT	BENTONITE CHIPS	BENTONITE PELLETS	IF OTHER TYPE OF ANNULAR MATERIAL, DESCRIBE	FILTER PACK SAND	FILTER PACK GRAVEL	FILTER PACK SIZE
0	76			X								

ANSWERED FEB - 2 2004

DEPTH OF BORING 300 Feet Below Land Surface

DEPTH OF COMPLETED WELL 300 Feet Below Land Surface

DWR 55-55B-10/01 (Rev.)

SHALLOW AQUIFER
A(22-5)36 CCC
WELL E

Well Driller Report and Well Log

WELL REGISTRATION NUMBER
55- 598623

SECTION 5. GEOLOGIC LOG OF WELL

DEPTH FROM SURFACE FROM (feet)	TO (feet)	DESCRIPTION Describe material, grain size, color, etc.	Check (X) every interval where water was encountered
0	7	Fill & Clay	
7	11	Malipai & Cinders	
11	70	Malipai	
70	160	Clay & Gravel	
160	240	Cinders	
240	300	Cinders & Clay	

SHALLOW AQUIFER

A(22-5)36 CCC

WELL E

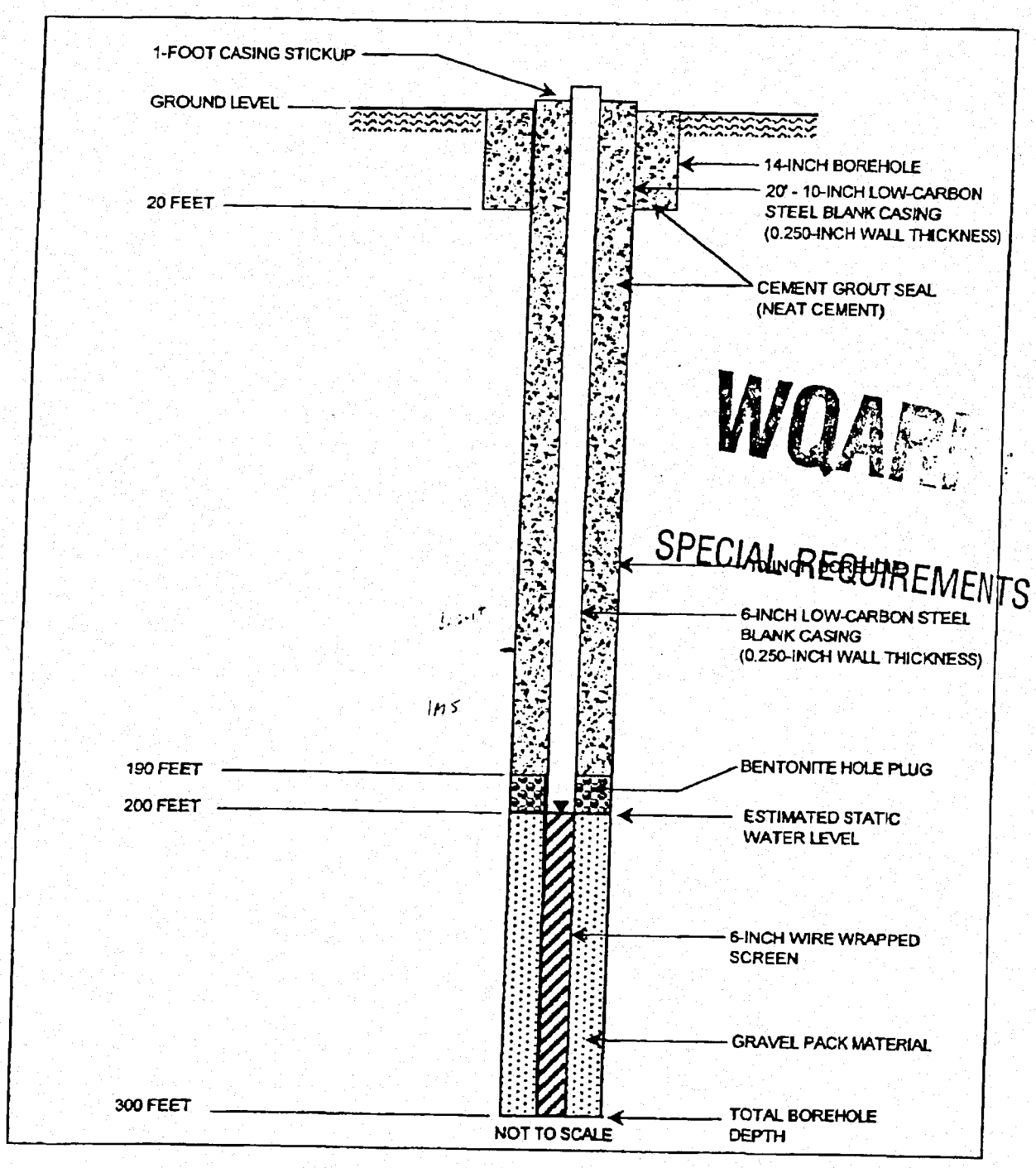

PROPOSED WELL CONSTRUCTION
DIAGRAM FOR McCLEVE WELL (FUELCO)

PREPARED BY: FLAGSTAFF WELL & SUPPLY CO., INC.

SHALLOW AQUIFER

A(22-5)36 CCC

WELL E

RECEIVED
MAR 20 1997
RECORDS MGT

STATE OF ARIZONA
DEPARTMENT OF WATER RESOURCES
GROUNDWATER MANAGEMENT SUPPORT SECTION

500 North Third Street - Phoenix, Arizona 85004-3903
Phone (602) 417-2470

WELL DRILLER REPORT

This report should be prepared by the Driller in all detail and filed with the Department within 30 days following completion of the well.

1. Owner's Name: Bellemont Travel center
   Address: PO Box 110087 (Street) Bellemont (City) AZ (State) 86015 (Zip) (Telephone Number)
2. Drilling Firm: Flagstaff Well & Supply Co. Inc.
   Address: PO Box 22280 (Street) Flagstaff (City) AZ (State) 86002 (Zip) 520-774-8243 (Telephone Number)
3. Location: SE ¼ (10 Acre) SW ¼ (40 Acre) SW ¼ (160 Acre) of Section 36 Township 22N Range 5E
4. Well Registration No. 55-559096 (Required)
5. Permit No. _____ (If issued)

ENTERED MAR 2 1 1997

DESCRIPTION OF WELL

6. Total Depth of Hole 240 ft.
7. Type of Casing Steel
8. Diameter and length of casing 8 inches from 0 to 42, 6 inches from 0 to 240
9. Method of sealing at reduction points grout
10. Perforated from 40 to 240 from _____ to _____ from _____ to _____
11. Size of cuts 1/8" Number of cuts per foot 12
12. If screen was installed: Length N/A feet. Diameter _____ inches. Type _____
13. Method of construction drilled (drilled, dug, driven, bored, jetted, etc.)
14. Date started Dec (Month) 30 (Day) 1996 (Year)
15. Date completed Feb (Month) 20 (Day) 1997 (Year)
16. Depth to water 42 ft. (If flowing well, so state).
17. Describe point from which depth measurements were made, and give sea-level elevation if available wellhead
18. If flowing well, state method of flow regulation:
19. Remarks: _____

FOR DEPARTMENT USE ONLY
Registration No. 55-559096
File No. A(22-5)36 ccd
Received _____ By ____
Entered _____ By ____

DWR-55-55 (Rev 5/96)

SHALLOW AQUIFER
A(22-5) 36 ccd
WELL A

LOG OF WELL

Indicate depth at which water was first encountered, and the depth and thickness of water bearing beds. If water is artesian, indicate depth at which encountered, and depth to which it rose in well.

From (feet)	To (feet)	
0	42	Fill
42	68	Malipai - (HARD)
68	87	Brown Clay
87	95	Red Clay & Cinders
95	100	Black Cinders & Clay
100	240	Clay & Cinders - Some river gravel

I hereby certify that this well was drilled by me (or under my supervision), and that each and all statements herein contained are true to the best of my knowledge and belief.

Driller's Name (Qualifying Party): John W Myers

PO Box 22280
Street

Flagstaff AZ 86002
City State Zip

520-774-8243
Phone Number

3/13/97
Date

DWR 55-55 (Rev 5/96)

SHALLOW AQUIFER
A(22-5)36 ccd -
WELL A

ARIZONA DEPARTMENT OF WATER RESOURCES
500 North Third Street
Phoenix, Arizona 85004

WELL DRILLER REPORT

This report should be prepared by the driller in all detail and filed with the Department within 30 days following completion of the well.

RECEIVED
AUG 14 1998
RECORDS MGT

1. DRILL TECH INC
   6515 N HWY 89
   CHINO VALLEY AZ 86323

2. Owner Name: Bellemont TravelCenter
   Address: P.I. Box 16087 Belmont Az. 86015
   City State Zip

3. Location: 22N N/S 5E E/W 36 ¼ Se ¼ Sw ¼ Sw
   Township Range Section 10-acre 40-acre 160-acre

4. Well Registration No. 55- 564258 (Required)
5. Permit No. _____ (If issued)

DESCRIPTION OF WELL

6. Total depth of hole 300 ft.
7. Type of casing Steel/ PVC
8. Diameter and length of casing 7 in. from 0 to 20, 4.5 in from 0 to 300
9. Method of sealing at reduction points _____
10. Perforated from 200 to 300, from _____ to _____ from _____ to _____
11. Size of cuts Fac Perf Number of cuts per foot _____
12. If screen was installed: Length _____ ft. Diam _____ in. Type _____
13. Method of construction Drilled
    (drilled, dug, driven, bored, jetted, etc)
14. Date started July 28 1998
    Month Day Year
15. Date completed July 29, 1998
    Month Day Year
16. Depth to water 16 ft. (If flowing well, so state)
17. Describe point from which depth measurements were made, and give sea-level elevation if available
18. If flowing well, state method of flow regulation: _____
19. Remarks: _____

DWR-55-55-7/95 (Rev.)

DO NOT WRITE IN THIS SPACE
OFFICE RECORD

Registration No. 55-564258
File No. A(22-5)36CCD
Received _____ By _____
Entered _____ By _____
ANSWERED AUG 20 1998

SHALLOW AQUIFER
A(22-5)36 CCd
WELL B

LOG OF WELL

Indicate depth at which water was first encountered, and the depth and thickness of water bearing beds. If water is artesian, indicate depth at which encountered, and depth to which it rose in well.

From (feet)	To (feet)	Description of formation material
0	2	Top Soil
2	43	Colg
43	132	Malapai
132	204	Clay
204	242	Malapai
242	270	Clay
270	300	Malapai
		GPM: 10+

I hereby certify that this well was drilled by me(or under my supervision), and that each and all statements herein contained are true to the best of my knowledge and belief.

Driller Name:_____

Street

City South Rio State Zip 6368006 Phone No.

Signature of Driller 8/12/96 Date

SHALLOW AQUIFER
A(22-5)36 ccd
WELL B

JUL 1987
DEPARTMENT OF WATER RESOURCES

STATE OF ARIZONA
DEPARTMENT OF WATER RESOURCES
99 EAST VIRGINIA AVENUE
PHOENIX, ARIZONA 85004

WELL DRILLER REPORT

This report shall be prepared by the driller in all detail and filed with the Department within 30 days following completion of the well.

1. Owner Leonard Martinson
   Name
   P.O Box 111, Bellemont Az. 86015
   Mailing Address
2. Driller Flagstaff Well & Supply
   Name
   P.O Box 22280, Flagstaff Az. 86002
   Mailing Address
3. Location of well: 22N, 5E, sec 36 SE SW SW
4. Permit No. 55-515324
   (if issued)

DESCRIPTION OF WELL

5. Total depth of hole 105 ft.
6. Type of casing steel
7. Diameter and length of casing 6" in. from 0 to 105, 8" in from 0 to 20.
8. Method of sealing at reduction points grout
9. Perforated from 40 to 100, from ____ to ____, from ____ to ____.
10. Size of cuts 1/4 Number of cuts per foot 6
11. If screen was installed: Length ____ ft. Diam ____ in. Type ____
12. Method of construction drilled
    drilled, dug, driven, bored, jetted, etc.
13. Date started 6 (Month) 8 (Day) 87 (Year)
14. Date completed 7 (Month) 10 (Day) 87 (Year)
15. Depth to water 22 ft. (If flowing well, so state.)
16. Describe point from which depth measurements were made, and give sea-level elevation if available ground level
17. If flowing well, state method of flow regulation: ____
18. Remarks: ____

DO NOT WRITE IN THIS SPACE
OFFICE RECORD
Registration No. 55-515324
Received ____ By ____
Entered ENTERED AUG 07 1987
File No. A(22-5)36 ccd

DWR-55-6-Rev. 8/85

SHALLOW AQUIFER
A(22-5)36 ccd
WELL D

LOG OF WELL

Indicate depth at which water was first encountered, and the depth and thickness of water bearing beds. If water is artesian, indicate depth at which encountered, and depth to which it rose in well.

From (feet)	To (feet)	Description of formation material
0	15	CLAY
15	35	HARD LAVA
35	90	LAVA with CINDER LAYERS
90	105	LAVA

I hereby certify that t is well was drilled by me (or under my supervision), and that each and all of the statements herein contained are true to the best of my knowledge and belief.

Driller Flagstaff Well & Supply
Name

P.O Box 22280
Address

Flagstaff AZ 86002
City State Zip

Date 7/21/87

SHALLOW AQUIFER
A(22-5)36 ccd
WELL D

STATE OF ARIZONA

DEPARTMENT OF WATER RESOURCES

WELL DRILLER REPORT

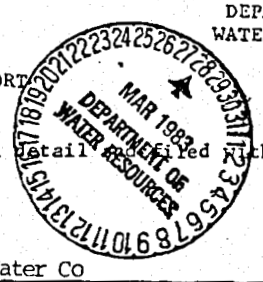

This report should be prepared by the driller in all detail and filed with the Department within 30 days following completion of the well.

1. Owner Fred Bomkamp Water Co
Name
P O Box 11177 Phoenix AZ 85061
Address

2. Lessee or Operator
Name
Address

3. Driller Charles A. Bulfer
Name
P. O. Box 704 Parks, AZ 86018
Address

4. Location of well: T-22N R-5E S-36

5. Permit No. (if issued)

DESCRIPTION OF WELL

6. Total depth of hole 215 ft.

7. Type of Casing Machine Perforated Liner

8. Diameter and length of casing 6 5/8 in. from -1 to 120', in from to .

9. Method of sealing at reduction points

10. Perforated from 120' to 215', from to , from to

Size of cuts 1/8" X 3" Number of cuts per foot 18

12. If screen was installed: Length ft. Diam in. Type

13. Method of construction Drilled
drilled, dug, driven, bored, jetted, etc.

14. Date started September 1982
Month day year

15. Date completed September 1982
Month day year

16. Depth to water 111 ft. (If flowing well, so state.)

17. Describe point from which depth measurements were made, and give sea-level elevation if available.
ground

18. If flowing well, state method of flow regulation

19. REMARKS:

DO NOT WRITE IN THIS SPACE
OFFICE RECORD
Registration No. 55-503545
Received By
Entered 3-30-83 By
File No. A(22-5)36cdc

(Well log to appear on Reverse side)

SHALLOW AQUIFER
A(22-5)36 cdc
WELL C

LOG OF WELL

Indicate depth at which water was first encountered, and the depth and thickness of water bearing beds. If water is artesian, indicate depth at which encountered, and depth to which it rose in well.

FROM (FEET)	TO (FEET)	DESCRIPTION OF FORMATION MATERIAL
0	4 '	Clay
4	15 '	Clay & Gravel & Boulder
15	27 '	Scoria
27	36 '	Cinders & Clay
36	38 '	Scoria
38	47 '	Cinder
47	47½ '	Malapai
47½	63 '	Cinder
63	81 '	Malapai
81	215 '	Clay & Cinder & Valcanic Ash

I hereby certify that this well was drilled by me (or under my supervision), and that each and all of the statements herein contained are true to the best of my knowledge and belief.

Driller Charles A. Brown
Name

P. O. Box 704 Parks, Az 86018
Address

Date

2-73

SHALLOW AQUIFER
A(22-5)36 cdc
WELL C

ARIZONA DEPARTMENT OF WATER RESOURCES
Records Management Section
500 N. 3rd Street • Phoenix, Arizona 85004
(602) 417-2405 • (800) 352-8488
www.water.az.gov

Well Driller Report and Well Log

MAY 22 2003

FILE NUMBER: A(22-5)36 BDC
WELL REGISTRATION NUMBER: 55- 593267
PERMIT NUMBER (IF ISSUED)

- Review instructions prior to completing form
- This report should be prepared by the driller in detail and filed with the Department within 30 days following completion of the well.

** PLEASE PRINT CLEARLY **

SECTION 1. REGISTRY INFORMATION

Well Owner

FULL NAME OF COMPANY, ORGANIZATION OR INDIVIDUAL: LONNIE MCCLEVE
MAILING ADDRESS: 721 E SAN PEDRO
CITY / STATE / ZIP: GILBERT, AZ 85234
CONTACT PERSON NAME AND TITLE:
TELEPHONE NUMBER: 480-540-5656
FAX:

Location of Well

WELL LOCATION ADDRESS (IF KNOWN): Bellemont Travel Center - I-40 Exit 185

TOWNSHIP (N/S)	RANGE (E/W)	SECTION	160 ACRE	40 ACRE	10 ACRE
22 N	5E	36	NW 1/4	SE 1/4	SW 1/4

LATITUDE: 35° | 14 . | 21 " N
LONGITUDE: 111° | 49 . | 16 " W
LAND SURFACE ELEVATION AT WELL: 7,136 Feet Above Sea Level
METHOD OF LATITUDE / LONGITUDE (CHECK ONE): ☒ Hand-Held
☐ USGS Quad Map ☐ Conventional Survey ☒ GPS: ☐ Survey-Grade
COUNTY ASSESSOR'S PARCEL ID NUMBER: BOOK 203 | MAP 47 | PARCEL 001H
COUNTY WHERE WELL IS LOCATED: Coconino

SECTION 2. DRILLING AUTHORIZATION

Drilling Firm

NAME: FLAGSTAFF WELL AND SUPPLY COMPANY, INC.
DWR LICENSE NUMBER: 336
TELEPHONE NUMBER: 928-774-8243
FAX: 928-774-4269

SECTION 3. WELL CONSTRUCTION DETAILS

DATE WELL CONSTRUCTION STARTED: September 4, 2003
DATE WELL CONSTRUCTION COMPLETED: April 25, 2003
IF FLOWING WELL, METHOD OF FLOW REGULATION: ☐ Valve ☐ Other

Drill Method

CHECK ONE
- ☒ Air Rotary
- ☐ Bored or Augered
- ☐ Cable Tool
- ☐ Dual Rotary
- ☐ Mud Rotary
- ☐ Reverse Circulation
- ☐ Driven
- ☐ Jetted
- ☐ Air Percussion / Odex Tubing
- ☐ Other (please specify)

Method of Well Development

CHECK ONE
- ☒ Airlift
- ☐ Bail
- ☐ Surge Back
- ☐ Surge Pump
- ☐ Other (please specify)

Method of Sealing at Reduction Points

CHECK ONE
- ☐ None
- ☐ Packed
- ☐ Swedged
- ☒ Welded
- ☐ Other (please specify)

Water Level Information

STATIC WATER LEVEL: 1,550 Feet Below Land Surface
DATE MEASURED: May 5, 2003

DWR-55-55-10/01 (Rev.)

ANSWERED MAY 23 2003
REGIONAL AQUIFER
A(22-5)36 bdc = cdc
DEEP WELL

Well Driller Report and Well Log

WELL REGISTRATION NUMBER: 55- 593267

SECTION 4. WELL CONSTRUCTION DESIGN (AS BUILT) (attach additional page if needed)

Borehole			Installed Casing														
DEPTH FROM SURFACE			DEPTH FROM SURFACE			MATERIAL TYPE (X)				PERFORATION TYPE (X)						
FROM (feet)	TO (feet)	BOREHOLE DIAMETER (inches)	FROM (feet)	TO (feet)	OUTER DIAMETER (inches)	STEEL	PVC	ABS	IF OTHER TYPE, DESCRIBE	BLANK OR NONE	WIRE WRAP	SHUTTER SCREEN	MILLS KNIFE	SLOTTED	IF OTHER TYPE, DESCRIBE	SLOT SIZE IF ANY (inches)
0	500	14"	0	500	10"	X										
500	2400	10"	0	1947	8"	X										
			1530	1947	8"	X								X		1/8"

Installed Annular Material												
DEPTH FROM SURFACE		ANNULAR MATERIAL TYPE (X)								FILTER PACK		
FROM (feet)	TO (feet)	NONE	CONCRETE	NEAT CEMENT OR CEMENT GROUT	CEMENT-BENTONITE GROUT	BENTONITE GROUT	BENTONITE CHIPS	BENTONITE PELLETS	IF OTHER TYPE OF ANNULAR MATERIAL, DESCRIBE	SAND	GRAVEL	SIZE
0	500			X								

DEPTH OF BORING: 2,440 Feet Below Land Surface

DEPTH OF COMPLETED WELL: 2,400 Feet Below Land Surface

DWR-55-55B-10/01 (Rev.)

ANSWERED MAY 2 3 2003

REGIONAL AQUIFER
A(22-5)36 ddc-cdc
DEEP WELL 1

Well Driller Report and Well Log

WELL REGISTRATION NUMBER
55- 593267

SECTION 5. GEOLOGIC LOG OF WELL

DEPTH FROM SURFACE FROM (feet)	TO (feet)	DESCRIPTION Describe material, grain size, color, etc.	Check (X) every interval where water was encountered
0	28	hard basalt	
28	75	clay + cinders - black cinders, brown clay	
75	90	limestone - dark brown	
90	125	limestone - light brown	
125	300	limestone - brown with red streaks	
300	410	limestone - tan color with red + blue sandstone layers	
410	600	hard limestone - brown with red sandstone + quartz	
600	680	sandstone with malipai + quartz layers	
680	840	brown sandstone + clay	
840	920	yellow sandstone + clay	
920	1230	brown sandstone - fine	
1230	1370	red sandstone - course	
1370	1910	brown + yellow sandstone	X 1550
1910	1990	brown sandstone - hard	
1990	2010	red sandstone - yellow layers imbedded	
2010	2380	red sandstone - hard	
2380	2440	red + brown sandstone	

REGIONAL AQUIFER
A(22-5)36 bdc = cdc
DEEP WELL !

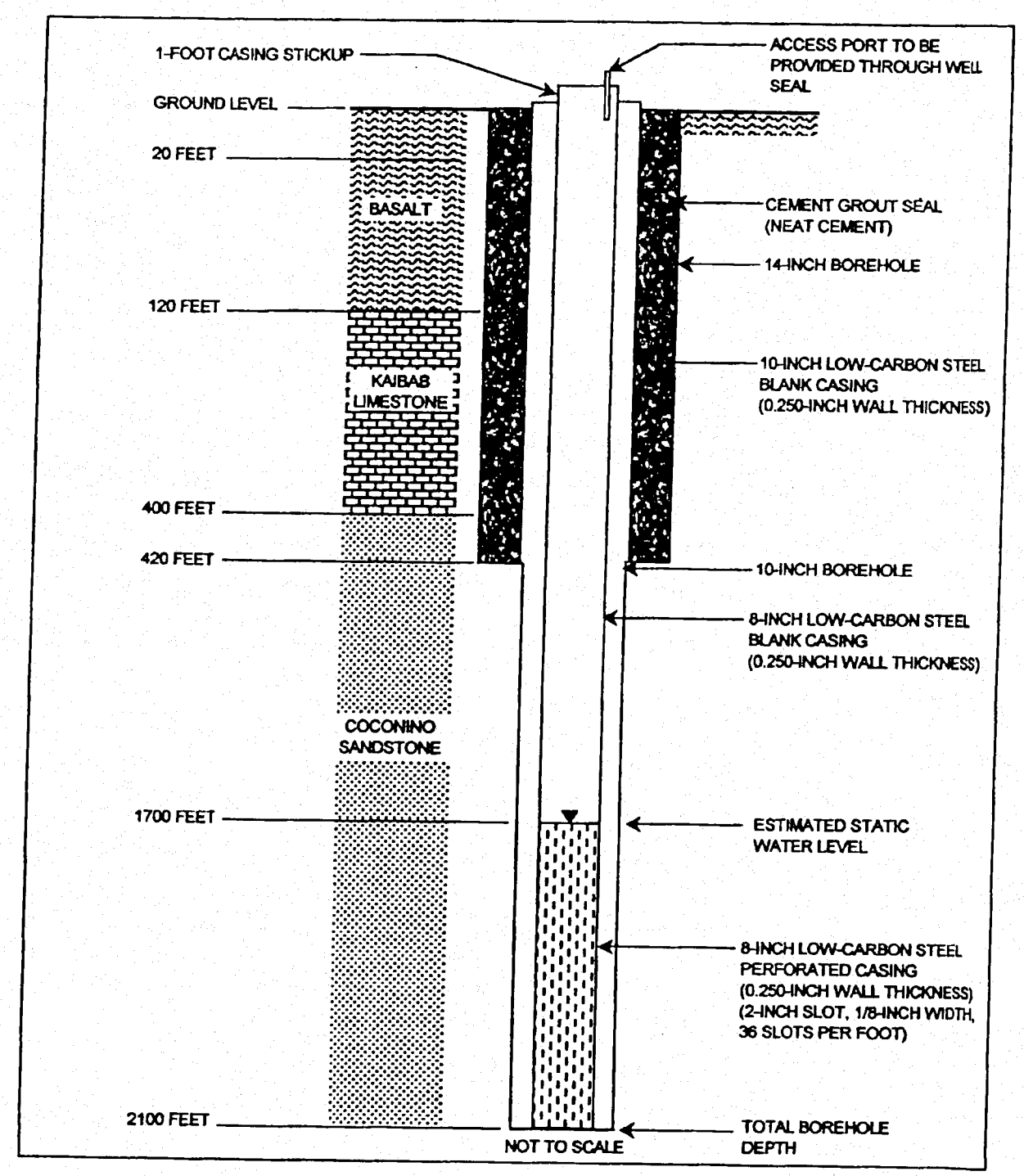

PROPOSED WELL CONSTRUCTION
DIAGRAM FOR McCLEVE WELL
WELL REGISTRY #55-593267
T22N, R5E, SECTION 36 BDC

PREPARED BY: FLAGSTAFF WELL & SUPPLY CO., INC.

REGIONAL AQUIFER
A(22-5)36 ~~bdc~~ cdc
DEEP WELL 1

ARIZONA DEPARTMENT OF WATER RESOURCES
Records Management Section
500 N. 3rd Street • Phoenix, Arizona 85004
(602) 417-2405 • (800) 352-8488
www.water.az.gov

Well Driller Report and Well Log

RECEIVED
NOV 18 2003
Information Management

- Review instructions prior to completing form
- This report should be prepared by the driller in detail and filed with the Department within 30 days following completion of the well.

** PLEASE PRINT CLEARLY **

FILE NUMBER: A(22-5) 36 CCC
WELL REGISTRATION NUMBER: 55- 598834
PERMIT NUMBER (IF ISSUED):

SECTION 1. REGISTRY INFORMATION

Well Owner

FULL NAME OF COMPANY, ORGANIZATION OR INDIVIDUAL: FUELCO
MAILING ADDRESS: 721 E SAN PEDRO
CITY / STATE / ZIP: GILBERT, AZ 85234
CONTACT PERSON NAME AND TITLE:
TELEPHONE NUMBER: 480-892-8756
FAX:

Location of Well

WELL LOCATION ADDRESS (IF KNOWN): I-40 Exit 185

TOWNSHIP (N/S)	RANGE (E/W)	SECTION	160 ACRE	40 ACRE	10 ACRE
22N	5E	36	SW 1/4	SW 1/4	SW 1/4

LATITUDE: 35° | 14 . | 18 " N
LONGITUDE: 111° | 49 . | 24 " W
LAND SURFACE ELEVATION AT WELL: 7155 Feet Above Sea Level
METHOD OF LATITUDE / LONGITUDE (CHECK ONE): ☒ Hand-Held ☐ USGS Quad Map ☐ Conventional Survey ☒ GPS: ☐ Survey-Grade
COUNTY ASSESSOR'S PARCEL ID NUMBER: BOOK 203 | MAP 47 | PARCEL 003A
COUNTY WHERE WELL IS LOCATED: Coconino

SECTION 2. DRILLING AUTHORIZATION

Drilling Firm

NAME: FLAGSTAFF WELL AND SUPPLY COMPANY, INC.
DWR LICENSE NUMBER: 336
TELEPHONE NUMBER: 928-774-8243
FAX:

SECTION 3. WELL CONSTRUCTION DETAILS

DATE WELL CONSTRUCTION STARTED: 7-7-03
DATE WELL CONSTRUCTION COMPLETED: 9-22-03
IF FLOWING WELL, METHOD OF FLOW REGULATION: ☐ Valve ☐ Other

Drill Method

CHECK ONE
- ☒ Air Rotary
- ☐ Bored or Augered
- ☐ Cable Tool
- ☐ Dual Rotary
- ☐ Mud Rotary
- ☐ Reverse Circulation
- ☐ Driven
- ☐ Jetted
- ☐ Air Percussion / Odex Tubing
- ☐ Other (please specify)

Method of Well Development

CHECK ONE
- ☒ Airlift
- ☐ Bail
- ☐ Surge Back
- ☐ Surge Pump
- ☐ Other (please specify)

Method of Sealing at Reduction Points

CHECK ONE
- ☐ None
- ☐ Packed
- ☐ Swedged
- ☒ Welded
- ☐ Other (please specify)

Water Level Information

STATIC WATER LEVEL: 1342 Feet Below Land Surface
DATE MEASURED: 9-22-03

ANSWERED DEC 2 5 2003

REGIONAL AQUIFER
A(22-5)36 CCC
DEEP WELL 2

DWR-55-55-10/01 (Rev.)

Well Driller Report and Well Log

WELL REGISTRATION NUMBER
55- 598834

SECTION 4. WELL CONSTRUCTION DESIGN (AS BUILT) (attach additional page if needed)

Borehole			Installed Casing													
DEPTH FROM SURFACE			DEPTH FROM SURFACE			MATERIAL TYPE (X)				PERFORATION TYPE (X)						
FROM (feet)	TO (feet)	BOREHOLE DIAMETER (inches)	FROM (feet)	TO (feet)	OUTER DIAMETER (inches)	STEEL	PVC	ABS	IF OTHER TYPE, DESCRIBE	BLANK OR NONE	WIRE WRAP	SHUTTER SCREEN	MILLS KNIFE	SLOTTED	IF OTHER TYPE, DESCRIBE	SLOT SIZE IF ANY (inches)
0	400	14"	0	400	10"	X				X						
400	2100	10"	0	1540	8"	X				X						
			1540	2100	8"	X								X		1/8"

Installed Annular Material													
DEPTH FROM SURFACE		ANNULAR MATERIAL TYPE (X)								FILTER PACK			
FROM (feet)	TO (feet)	NONE	CONCRETE	NEAT CEMENT OR CEMENT GROUT	CEMENT-BENTONITE GROUT	BENTONITE GROUT	BENTONITE CHIPS	BENTONITE PELLETS	IF OTHER TYPE OF ANNULAR MATERIAL, DESCRIBE	SAND	GRAVEL	SIZE
0	400			X								

DEPTH OF BORING 2100 Feet Below Land Surface

DEPTH OF COMPLETED WELL 2100 Feet Below Land Surface

DWR-55-55B-10/01 (Rev.)

REGIONAL AQUIFER
A(22-5)36CCC
DEEP WELL 2

Well Driller Report and Well Log

WELL REGISTRATION NUMBER
55-598834

SECTION 5. GEOLOGIC LOG OF WELL

DEPTH FROM SURFACE FROM (feet)	TO (feet)	DESCRIPTION Describe material, grain size, color, etc.	Check (X) every interval where water was encountered
0	16	BROWN CLAY	
16	26	MALIPAI	
26	35	RED CLAY	
35	42	MALIPAI	
42	60	BLACK CINDERS	
60	90	MALIPAI	
90	110	CLAY & CINDERS	
110	125	CLAY	
125	375	LIMESTONE	
375	505	COCONINO SANDSTONE LT. YELLOW	
505	615	" " BROWN	
615	700	" " DK. BROWN	
700	852	" " " " -COARSE	
852	853	FRACTURED	
853	900	COCONINO SANDSTONE - LT. TAN	
900	1265	" " - DK. BROWN -	FRACTURE AT 1265
1265	1320	" " " " -COARSE	
1320	1565	RED SANDSTONE -FRACTURE AT 1565	
1565	1820	DARK RED SANDSTONE	
1820	1860	BROWN & LT. TAN SANDSTONE	1840-1902 HEAVILY FRACTURED
1860	1925	DK. RED SANDSTONE	
1925	2100	LT. RED SANDSTONE	

REGIONAL AQUIFER
A(22-5)36 CCC
DEEP WELL 2

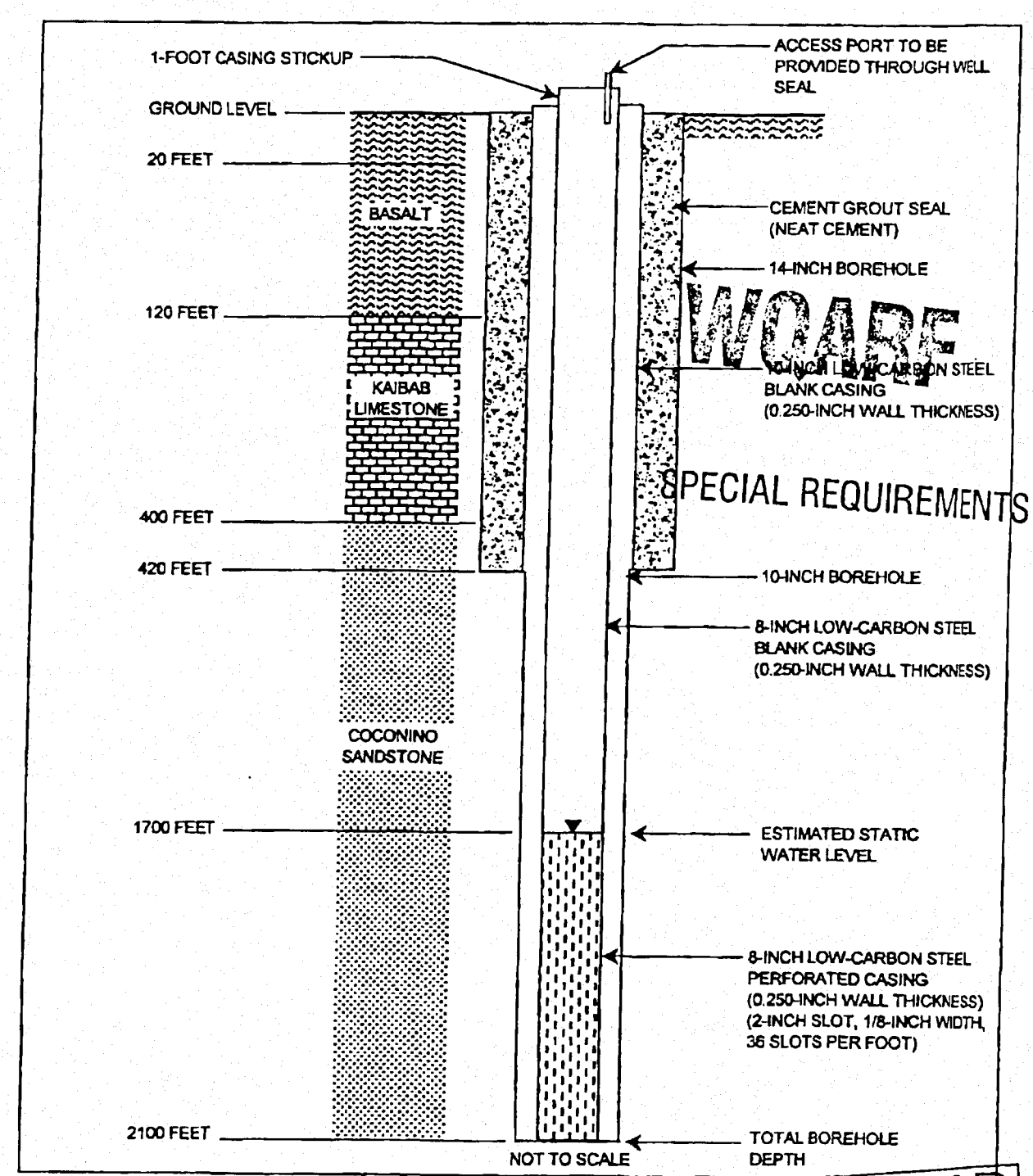

WCARF
SPECIAL REQUIREMENTS

PROPOSED WELL CONSTRUCTION DIAGRAM FOR McCLEVE WELL

PREPARED BY: FLAGSTAFF WELL & SUPPLY CO., INC.

RECEIVED
MAY 15 2003
GROUNDWATER MGT

REGIONAL AQUIFER
A(22-5)36 CCC
DEEP WELL 2

ARIZONA DEPARTMENT OF WATER RESOURCES
Records Management Section
500 N. 3rd Street • Phoenix, Arizona 85004
(602) 417-2405 • (800) 352-8488
www.water.az.gov

RECEIVED
JUL 27 2004
Information Management

Well Driller Report and Well Log

- Review instructions prior to completing form
- This report should be prepared by the driller in detail and filed with the Department within 30 days following completion of the well.

** PLEASE PRINT CLEARLY **

FILE NUMBER: A(22-5) 36 CCC
WELL REGISTRATION NUMBER: 55- 203241
PERMIT NUMBER (IF ISSUED):

SECTION 1. REGISTRY INFORMATION

Well Owner

FULL NAME OF COMPANY, ORGANIZATION OR INDIVIDUAL: GREENFIELD LAND DEVELOPMENT
MAILING ADDRESS: 721 E SAN PEDRO
CITY / STATE / ZIP: GILBERT, AZ 85234
CONTACT PERSON NAME AND TITLE: Lonnie McCleve
TELEPHONE NUMBER: 480-892-8756
FAX:

Location of Well

WELL LOCATION ADDRESS (IF KNOWN): I-40 exit 185 Bellemont, AZ

TOWNSHIP (N/S)	RANGE (E/W)	SECTION	160 ACRE	40 ACRE	10 ACRE
22 N	5 E	36	5 W 1/4	5 W 1/4	5 W 1/4

LATITUDE: N 35° 14' 18.539" N
LONGITUDE: W 111° 49' 24.892" W
LAND SURFACE ELEVATION AT WELL: 7145 Feet Above Sea Level
METHOD OF LATITUDE / LONGITUDE (CHECK ONE): ☐ USGS Quad Map ☐ Conventional Survey ☑ GPS: ☑ Hand-Held ☐ Survey-Grade
COUNTY ASSESSOR'S PARCEL ID NUMBER: BOOK 203 | MAP 47 | PARCEL 003A
COUNTY WHERE WELL IS LOCATED: Coconino

SECTION 2. DRILLING AUTHORIZATION

Drilling Firm

NAME: BOB BEEMAN DRILLING COMPANY
DWR LICENSE NUMBER: 571
TELEPHONE NUMBER: 435-259-7281
FAX: 435-259-6491

ANSWERED JUL 27 2004

SECTION 3. WELL CONSTRUCTION DETAILS

DATE WELL CONSTRUCTION STARTED: 5/31/04
DATE WELL CONSTRUCTION COMPLETED: 6/30/04
IF FLOWING WELL, METHOD OF FLOW REGULATION: ☐ Valve ☐ Other

Drill Method

CHECK ONE
- ☑ Air Rotary
- ☐ Bored or Augered
- ☐ Cable Tool
- ☐ Dual Rotary
- ☐ Mud Rotary
- ☐ Reverse Circulation
- ☐ Driven
- ☐ Jetted
- ☐ Air Percussion / Odex Tubing
- ☐ Other (please specify)

Method of Well Development

CHECK ONE
- ☑ Airlift
- ☐ Bail
- ☐ Surge Back
- ☐ Surge Pump
- ☐ Other (please specify)

Method of Sealing at Reduction Points

CHECK ONE
- ☐ None
- ☐ Packed
- ☑ Swedged
- ☑ Welded
- ☐ Other (please specify)

Water Level Information

STATIC WATER LEVEL: 1590 Feet Below Land Surface
DATE MEASURED: 6/8/04

DWR-55-55-10/01 (Rev.)

REGIONAL AQUIFER
A(22-5) 36 CCC
DEEP WELL 3

Well Driller Report and Well Log

WELL REGISTRATION NUMBER
55- 203241

SECTION 4. WELL CONSTRUCTION DESIGN (AS BUILT) (attach additional page if needed)

Borehole

Installed Casing

Borehole: DEPTH FROM SURFACE FROM (feet)	Borehole: DEPTH FROM SURFACE TO (feet)	Borehole: BOREHOLE DIAMETER (inches)	Installed Casing: DEPTH FROM SURFACE FROM (feet)	Installed Casing: DEPTH FROM SURFACE TO (feet)	Installed Casing: OUTER DIAMETER (inches)	MATERIAL TYPE (X): STEEL	MATERIAL TYPE (X): PVC	MATERIAL TYPE (X): ABS	MATERIAL TYPE (X): IF OTHER TYPE, DESCRIBE	PERFORATION TYPE (X): BLANK OR NONE	PERFORATION TYPE (X): WIRE WRAP	PERFORATION TYPE (X): SHUTTER SCREEN	PERFORATION TYPE (X): MILLS KNIFE	PERFORATION TYPE (X): SLOTTED	PERFORATION TYPE (X): IF OTHER TYPE, DESCRIBE	SLOT SIZE IF ANY (inches)
0	145	24"	0	134	18"	X			.375 wall	X						
145	418	17"	0	340	14"	X			.375 wall	X						
418	1871	15"	0	1150	10 3/4"	X			.279 wall	X						
1871	2490	12 1/4	1150	2310	10 3/4"	X			.365 wall	X						
2490	2825	9 7/8	2275	2801	8 5/8"	X			.322 wall					X	6 slots per foot	1/16"

Installed Annular Material

DEPTH FROM SURFACE FROM (feet)	DEPTH FROM SURFACE TO (feet)	ANNULAR MATERIAL TYPE (X): NONE	CONCRETE	NEAT CEMENT OR CEMENT GROUT	CEMENT-BENTONITE GROUT	BENTONITE: GROUT	BENTONITE: CHIPS	BENTONITE: PELLETS	IF OTHER TYPE OF ANNULAR MATERIAL, DESCRIBE	FILTER PACK: SAND	FILTER PACK: GRAVEL	FILTER PACK: SIZE
0	2310			X								
2310	2801								Open area in anvlas			

DEPTH OF BORING: 2825 Feet Below Land Surface

DEPTH OF COMPLETED WELL: 2801 Feet Below Land Surface

DWR-55-55B-10/01 (Rev.)

REGIONAL AQUIFER
A(225) 36CCC
DEEP WELL 3

Well Driller Report and Well Log

WELL REGISTRATION NUMBER
55- 203241

SECTION 5. GEOLOGIC LOG OF WELL

DEPTH FROM SURFACE FROM (feet)	DEPTH FROM SURFACE TO (feet)	DESCRIPTION Describe material, grain size, color, etc.	Check (X) every interval where water was encountered
0	55	alluvium	
55	330	Basalt & Volcanics	X
330	810	Kaibab Formation	
810	920	Toroweap Formation	
920	1315	Coconino Sandstone	
1315	1870	Schnebly Hill Formation	
1870	2330	Upper Supai Formation	X
2330	2825	Middle Supai Formation	X

REGIONAL AQUIFER
A(22-5) 36CCC
DEEP WELL 3

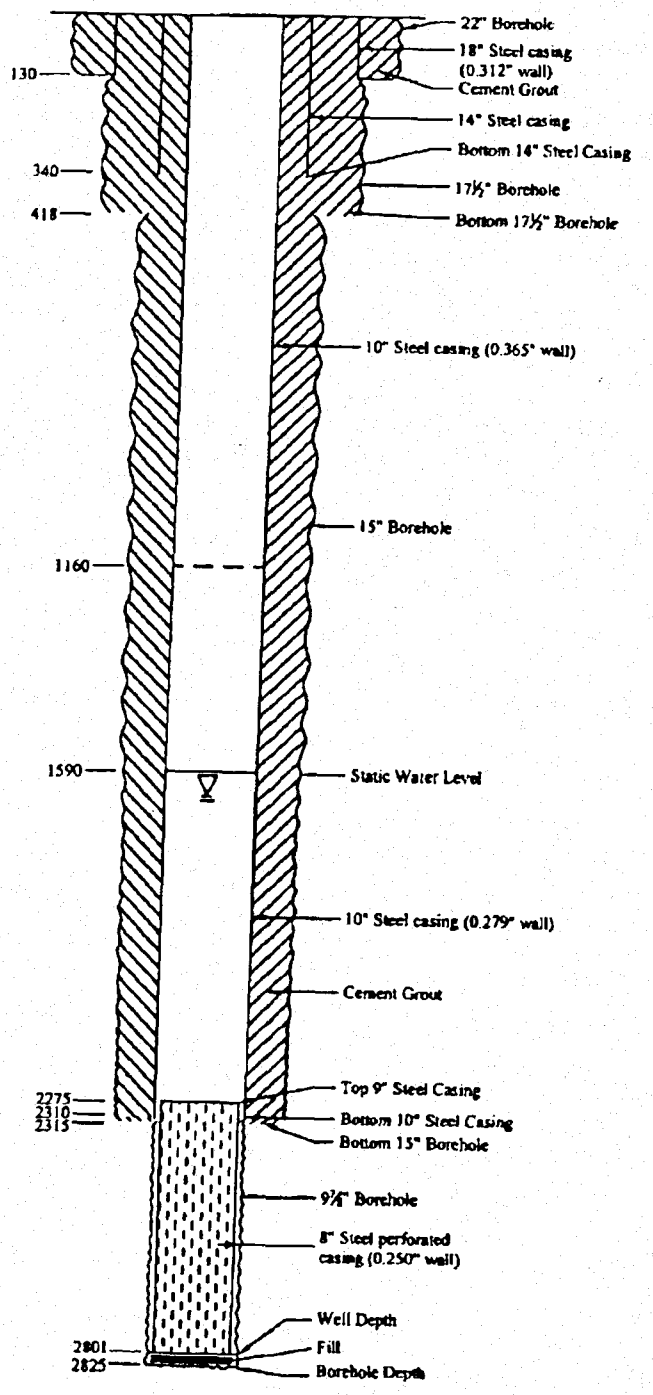

Not To Scale

HydroSystems Inc. GARY G. SMALL M.S., P.G., C.E.I 1238 S. PARK LANE, SUITE B TEMPE, AZ. 85281 TELEPHONE: 480-517-0830 FAX: 480-517-0840	As Built for Deep Well Bell-3	Figure

File Path: s:\04-369\Figures\Well design well 3.dwg

TOTAL P.02

REGIONAL AQUIFER
A(22-5)36 CCC
DEEP WELL 3

ARIZONA DEPARTMENT OF WATER RESOURCES
Records Management Section
500 N. 3rd Street * Phoenix, Arizona 85004
(602) 417-2405 * (800) 352-8488
www.water.az.gov

Well Driller Report and Well Log

RECEIVED
MAY 19 2003
Information Management

FILE NUMBER: A(21-5)11 ABA
WELL REGISTRATION NUMBER: 55-594719
PERMIT NUMBER (IF ISSUED):

- Review instructions prior to completing form
- This report should be prepared by the driller in detail and filed with the Department within 30 days following completion of the well.

** PLEASE PRINT CLEARLY **

SECTION 1. REGISTRY INFORMATION

Well Owner

FULL NAME OF COMPANY, ORGANIZATION OR INDIVIDUAL: ARIZONA ARMY NATIONAL GUARD
MAILING ADDRESS: 5636 E MCDOWELL RD M5330
CITY / STATE / ZIP: PHOENIX, AZ 85008
CONTACT PERSON NAME AND TITLE:
TELEPHONE NUMBER: 602-267-2742
FAX:

Location of Well

WELL LOCATION ADDRESS (IF KNOWN):
TOWNSHIP (N/S): 21 | RANGE (E/W): 5 | SECTION: 11 | 160 ACRE: NE 1/4 | 40 ACRE: NW 1/4 | 10 ACRE: NE 1/4
LATITUDE: ° . "N | LONGITUDE: ° . "W
LAND SURFACE ELEVATION AT WELL: Feet Above Sea Level
METHOD OF LATITUDE / LONGITUDE (CHECK ONE): ☐ Hand-Held ☐ USGS Quad Map ☐ Conventional Survey ☐ GPS: ☐ Survey-Grade
COUNTY ASSESSOR'S PARCEL ID NUMBER: BOOK 0 | MAP 0 | PARCEL
COUNTY WHERE WELL IS LOCATED: Coconino

SECTION 2. DRILLING AUTHORIZATION

Drilling Firm

NAME: BOB BEEMAN DRILLING COMPANY
DWR LICENSE NUMBER: 571
TELEPHONE NUMBER: 435-259-7281
FAX: 435-259-6491

SECTION 3. WELL CONSTRUCTION DETAILS

DATE WELL CONSTRUCTION STARTED: 10/15/02
DATE WELL CONSTRUCTION COMPLETED: 4/15/03
IF FLOWING WELL, METHOD OF FLOW REGULATION: ☐ Valve ☐ Other

Drill Method

CHECK ONE
- ☑ Air Rotary
- ☐ Bored or Augered
- ☐ Cable Tool
- ☐ Dual Rotary
- ☐ Mud Rotary
- ☐ Reverse Circulation
- ☐ Driven
- ☐ Jetted
- ☐ Air Percussion / Odex Tubing
- ☐ Other (please specify)

Method of Well Development

CHECK ONE
- ☑ Airlift
- ☐ Bail
- ☐ Surge Back
- ☑ Surge Pump
- ☐ Other (please specify)

Water Level Information

STATIC WATER LEVEL: 1583' Feet Below Land Surface
DATE MEASURED:

Method of Sealing at Reduction Points

CHECK ONE
- ☐ None
- ☐ Packed
- ☒ Swedged 10x12
- ☐ Welded
- ☐ Other (please specify)

REGIONAL AQUIFER
A(21-5)11 aba
CAMP NAVAJO

COMPLETED MAY 20 2003

Well Driller Report and Well Log

WELL REGISTRATION NUMBER
55- 594719

SECTION 4. WELL CONSTRUCTION DESIGN (AS BUILT) (attach additional page if needed)

Borehole

DEPTH FROM SURFACE FROM (feet)	DEPTH FROM SURFACE TO (feet)	BOREHOLE DIAMETER (inches)
0	120	22"
0	1648	15"
1648	2085	14 1/2"

Installed Casing

DEPTH FROM SURFACE FROM (feet)	DEPTH FROM SURFACE TO (feet)	OUTER DIAMETER (inches)	MATERIAL TYPE (X) STEEL	PVC	ABS	IF OTHER TYPE, DESCRIBE	PERFORATION TYPE (X) BLANK OR NONE	WIRE WRAP	SHUTTER SCREEN	MILLS KNIFE	SLOTTED	IF OTHER TYPE, DESCRIBE	SLOT SIZE IF ANY (inches)
0	120	20"	X			Surface Casing						.375 wall	
0	1646	12"	X			GradeB	X					.375 wall	
1563	1646	10"	X			HSLA Gd	X					5/16 wall	
1646	2046	10"	X						X			Roscoe Moss	.060 slot
2046	2084	10"	X				X						

Installed Annular Material

DEPTH FROM SURFACE FROM (feet)	DEPTH FROM SURFACE TO (feet)	ANNULAR MATERIAL TYPE (X) NONE	CONCRETE	NEAT CEMENT OR CEMENT GROUT	CEMENT-BENTONITE GROUT	BENTONITE GROUT	BENTONITE CHIPS	BENTONITE PELLETS	IF OTHER TYPE OF ANNULAR MATERIAL, DESCRIBE	FILTER PACK SAND	FILTER PACK GRAVEL	FILTER PACK SIZE
0	1640			X								
1565	2084								Colorado Silica		X	8X12

DEPTH OF BORING _____ Feet Below Land Surface

DEPTH OF COMPLETED WELL _____ Feet Below Land Surface

DWR-55-55B-10/01 (Rev.)

REGIONAL AQUIFER
A(21-5)11 aba
CAMP NAVAJO

Southwest Ground-water Consultants, Inc.

Log of Boring: Camp Navajo

Drilling Agency: Bob Beeman	**Location:** A(21-5)11baa	**Project #:** B.649	**Samples:** Every 10'
Forman: Bob Beeman	**Elevation:** 7145 ft amsl	**Start Date:**	**Water Level:** 1,583
Drilling Equipment:	**Bedrock :** N/A	**End Date:** 10/23/02	**First Water:** 1957' bgs
Casing: 0-1646 ft bgs	**Comp Depth:** 2084' bgs	**Reg.#:**	**SGC Reps.:** WGW, CRC
Screen: 1,646-2,084 ft bgs	**Boring Angle:** Vertical		

Description of Cuttings	Depth (feet bgs)	Well Design	Drill Rate	Remarks
BASALT – Dark gray. Weathered, slightly vesicular. Trace of fines.	0-10			
Same as above.	10-20			
BASALT – Dark gray. Little to no vesicles. Slightly fractured.	20-30			
Same as above.	30-40			
Same as above.	40-50			
Same as above.	50-60			
Lean CLAY with sand (CL) – 75% Reddish brown clay with med toughness and med to high dry strength. 25% fine to coarse sand of basaltic origin. Sand is angular and dark gray.	60-70			- Possible burnt soil horizon.
BASALT – Dark gray. Little to no vesicles. Massive.	70-80			
LIMESTONE – yellowish pale white, dense, slightly crystalline dolomitic limestone. Trace of cinders with secondary calcite.	80-90			-Kaibab Limestone -Slight reaction w/ HCl
Same as above.	90-100			
Same as above - High % of basalt.	100-110			
Same as above.	110-120			
Same as above.	120-130			
Same as above – Less basalt.	130-140			
Same as above.	140-150			
Same as above.	150-160			
Same as above.	160-170			
Same as above.	170-180			
Same as above.	180-190			
Same as above.	190-200			
Same as above.	200-210			
Same as above.	210-220			
Same as above.	220-230			
Same as above.	230-240			
Same as above.	240-250			
Same as above.	250-260			
Same as above.	260-270			
Same as above.	270-280			

REGIONAL AQUIFER
A(21-5)11aba
CAMP NAVAJO

Description of Cuttings	Depth (feet bgs)	Well Design	Drill Rate	Remarks
Same as above.	280-290		10ft/hr	
Same as above.	290-300			
Same as above.	300-310			
SANDSTONE – Light yellow. Grains are poorly graded, fine to very fine, subangular to subrounded, and primarily quartz and calcite. Trace fines, possibly calcareous cement.	310-320		30ft/hr	- Toroweap Formation - rxn w/ HCl.
Same as above.	320-330			
Same as above.	330-340			
Same as above.	340-350			
Same as above.	350-360			
Same as above.	360-370			
Same as above.	370-380			
Same as above – less fines.	380-390			
Same as above.	390-400			
Same as above.	400-410			
Same as above.	410-420			
Same as above.	420-430			
Same as above.	430-440			
Same as above.	440-450			
Same as above.	450-460			
Same as above.	460-470			
Same as above – moderate amount of coarse grains. Darker color (light brown).	470-480			
Same as above – resumed the pale yellowish color and the fine to very fine sand.	480-490			
Same as above.	490-500			
Same as above.	500-510			
Same as above.	510-520			
Same as above.	520-530			
Same as above –beginning of color change (light reddish yellow).	530-540			
Same as above.	540-550			
Same as above – more reddish.	550-560			
Same as above.	560-570			
Same as above.	570-580			
Same as above – light red.	580-590			
Same as above.	590-600			
Same as above.	600-610			
Same as above.	610-620			
Same as above – very light red.	620-630			

REGINAL AQUIFER
A(2+5) Navajo
CAMP NAVAJO

Description of Cuttings	Depth (feet bgs)	Well Design	Drill Rate	Remarks
SANDSTONE – Pale reddish white. Grains are poorly graded, fine to very fine, subrounded to rounded, frosted, and primarily quartz. Trace fines, possibly calcareous cement.	630-640			- Coconino Sandstone - no rxn w/ HCl
Same as above.	640-650			
Same as above – Light yellow.	650-660			
Same as above.	660-670			
Same as above.	670-680			
Same as above.	680-690			- rxn w/ HCl.
Same as above.	690-700			
Same as above.	700-710			
Same as above.	710-720			
Same as above.	720-730			
Same as above.	730-740			
Same as above – Trace moderately plastic fines.	740-750			
Same as above.	750-760			
Same as above – 10% moderately plastic fines.	760-770			
SANDSTONE – Light brownish red. Grains are poorly graded, fine to very fine, subrounded to rounded, and primarily quartz and calcite. Trace fines, possibly calcareous cement.	770-780			- Schnebly Hill Formation - strong rxn w/ HCl.
Same as above.	780-790			
Same as above.	790-800			
SANDSTONE – Light yellow. Grains are poorly graded, fine to very fine, subrounded to rounded, frosted, and primarily quartz. Trace fines, possibly calcareous cement.	800-810			- Coconino Sandstone. - slight rxn w/ HCl.
Same as above.	810-820			
Same as above.	820-830			
Same as above.	830-840			
Same as above.	840-850			
Same as above.	850-860			
Same as above.	860-870			
Same as above.	870-880			
Same as above.	880-890			
Same as above.	890-900			
Same as above.	900-910			
Same as above.	910-920			
Same as above.	920-930			
Same as above.	930-940			
Same as above.	940-950			

REGIONAL AQUIFER
A(21-5) 11aba
CAMP NAVAJO

Description of Cuttings	Depth (feet bgs)	Well Design	Drill Rate	Remarks
Same as above.	950-960			- Coconino Sandstone
Same as above.	960-970			
Same as above.	970-980			
Same as above.	980-990			
Same as above.	990-1000			
Same as above.	1000-1010			
Same as above.	1010-1020			
Same as above.	1020-1030			
Same as above.	1030-1040			
Same as above.	1040-1050			
Same as above.	1050-1060			
Same as above.	1060-1070			
Same as above.	1070-1080			
Same as above.	1080-1090			
Same as above.	1090-1100			
Same as above.	1100-1110			
Same as above.	1110-1120			
Same as above.	1120-1130			
Same as above.	1130-1140			
Same as above.	1140-1150			
Same as above.	1150-1160			
Same as above.	1160-1170			
Same as above.	1170-1180			
Same as above.	1180-1190			
Same as above.	1190-1200			
Same as above.	1200-1210			- slight rxn w/HCl
Same as above.	1210-1220			
Same as above.	1220-1230			
Same as above.	1230-1240			
Same as above.	1240-1250			
Same as above.	1250-1260			
Same as above.	1260-1270			
Same as above.	1270-1280			
Same as above.	1280-1290			
Same as above.	1290-1300			
SANDSTONE – Light brownish red. Grains are fine to very fine, rounded to subangular, and poorly graded. High % of quartz. Some calcite. Small amount of fines.	1300-1310			- Supai Formation - Reaction w/ HCl
Same as above – Brownish red.	1310-1320			
Same as above.	1320-1330			

REGIONAL AQUIFER
A(21-5)11 a ba
CAMP NAVAJO

Description of Cuttings	Depth (feet bgs)	Well Design	Drill Rate	Remarks
SILTSTONE – 90% Brownish red nonplastic silt. Moderately cemented with CaCO3. 10% sand. High % of quartz. Grains are fine to very fine, rounded to subangular, and poorly graded.	1330-1340			- Supai Formation - Reaction w/HCl
Same as above.	1340-1350			
Same as above.	1350-1360			
Same as above.	1360-1370			
Same as above.	1370-1380			
Same as above.	1380-1390			
Same as above.	1390-1400			
Same as above.	1400-1410			
Same as above.	1410-1420			
Same as above.	1420-1430			
Same as above.	1430-1440			
Same as above.	1440-1450			
Same as above.	1450-1460			
Same as above.	1460-1470			
Same as above.	1470-1480			
Same as above.	1480-1490			
Same as above.	1490-1500			
Same as above.	1500-1510			
Same as above.	1510-1520			
Same as above.	1520-1530			
Same as above.	1530-1540			
Same as above.	1540-1550			
Same as above.	1550-1560			
Same as above.	1560-1570			
Same as above.	1570-1580			
Same as above.	1580-1590			
Same as above.	1590-1600			
Same as above.	1600-1610			
Same as above.	1610-1620			
Same as above.	1620-1630			
Same as above.	1630-1640			
Same as above.	1640-1650			
Same as above.	1650-1660			
Same as above.	1660-1670			
Same as above.	1670-1680			
Same as above.	1680-1690			
Same as above.	1690-1700			
Same as above.	1700-1710			

REGIONAL AQUIFER
A(21-5)11 aba
CAMP NAVAJO

Description of Cuttings	Depth (feet bgs)	Well Design	Drill Rate	Remarks
Same as above.	1710-1720			- Supai Formation - rxn w/ HCl
Sandy SILTSTONE – 85% Brownish red nonplastic silt. Moderately cemented with CaCO3. 15% sand. High % of quartz. Grains are fine to very fine, rounded to subangular, and poorly graded. Cuttings are fragments as opposed to grains.	1720-1730			- Supai Formation - rxn w/ HCl
Same as above.	1730-1740			
Same as above.	1740-1750			
Same as above	1750-1760			
Same as above.	1760-1770			
Same as above.	1770-1780			
Same as above.	1780-1790			
Same as above.	1790-1800			
Same as above.	1800-1810			
Same as above.	1810-1820			
Same as above.	1820-1830			
Same as above.	1830-1840			
SANDSTONE - 90% Brownish red sand. High % of quartz. Grains are fine to very fine, rounded to subangular, and poorly graded. 10% nonplastic fines.	1840-1850			- Supai Formation - Slight to no rxn w/ HCl
Same as above – trace fines.	1850-1860			
Same as above.	1860-1870			
Same as above.	1870-1880			
Same as above.	1880-1890			
Same as above.	1890-1900			
Same as above – 5% limestone fragments.	1900-1910			
Same as above – Trace limestone.	1910-1920			
Same as above.	1920-1930			
Same as above – Trace limestone.	1930-1940			
Same as above.	1940-1950			
Same as above.	1950-1960			
Same as above.	1960-1970			
Same as above.	1970-1980			- no rxn w/ HCl
Same as above.	1980-1990			
Same as above – small amount of fragments.	1990-2000			
Same as above – no fragments.	2000-2010			
Sandy SILT (ML) – 60% Dark brown to black slightly plastic silt. 40% fine to very fine subrounded to subangular, poorly sorted sand. High	2010-2020			- no rxn w/ HCl.

REGIONAL AQUIFER
A(21-5) 11 aba
CAMP NAVAJO.

Description of Cuttings	Depth (feet bgs)	Well Design	Drill Rate	Remarks
% of quartz.				
SANDSTONE – Brownish red. Grains are fine to very fine, rounded to subangular, and poorly graded. High % of quartz. Some calcite. Small amount of fines. Moderately cemented.	2020-2030			- Supai Formation - fragments - no rxn w/ HCl.
Same as above – lightly cemented. Cuttings are granular.	2030-2040			
Same as above.	2040-2050			
Same as above – cuttings are small fragments.	2050-2060			
Same as above – lightly cemented. Cuttings are granular.	2060-2070			
Same as above.	2070-2080			
Same as above.	2080-2084			TD = 2084 feet bgs.

REGIONAL AQUIFER
A(21-5)11 abd
CAMP NAVAJO

DEPARTMENT OF WATER RESOURCES
15 SOUTH 15TH AVENUE
PHOENIX, ARIZONA 85007

NOV 22 1989

REGISTRATION OF EXISTING WELLS

READ INSTRUCTIONS ON BACK OF THIS FORM BEFORE COMPLETING

PRINT OR TYPE - FILE IN DUPLICATE

05

REGISTRATION FEE (CHECK ONE)
EXEMPT WELL (NO CHARGE) ☐
NON-EXEMPT WELL - $10.00 ☒

LATE FEE $10.00 ☐

For Office Use Only
REGISTRATION NO. 55 805692-L
FILE NO. A(21-5) 11 cbc
FILED 2-13-90 at — (Date) (Time)
INA —
AMA

1. Name of Registrant:
U.S. Department of the Army, Navajo Depot Activity
~~by Department of Defense, National~~ Guard Bureau USPFO for Arizona
5636 E. McDowell (Address) Phoenix (City) Arizona (State) 85008 (Zip)

2. File and/or Control Number under previous groundwater law: ____ (File No.) 35 (Control No.)

3. a. The well is located within the SW ¼ NW ¼ SW ¼, Section 11 of Township 21N N/S, Range 5 E E/W, G&SRB&M, in the County of Coconino.

b. If in a subdivision: Name of subdivision ____

Lot No. ____ Address ____

4. The principal uses(s) of water: (Examples: irrigation, stockwater, domestic, municipal industrial domestic- industrial

5. If for irrigation use, number of acres irrigated from well N/A.

6. Owner of land on which well is located. If same as Item 1, check this box ☒

Name Address City State Zip

7. Well data (If data not available, write N/A)

a. Depth of Well 1,647 feet
b. Diameter of casing 12 inches
c. Depth of casing 1500 feet
d. Type of casing Steel.
e. Maximum pump capacity 65 gallons per minute.
f. Depth to water 1,273 feet below land surface.
g. Date well completed 4 (Month) 11 (Day) 50 (Year).

DEC 11 5 1989

8. The place(s) of use of water. If same as Item 3, check this box ☐

¼ ¼ ¼, Section Township Range

9. DATE 13 Nov 89 SIGNATURE OF REGISTRANT Larry W. Triphahn LTC Commanding NADA

RECEIVED
FEB 13 1990
OPERATIONS DIV.

MICROFILMED

DWR-55-76-9/85

ENTERED MAR 02 1990

REGIONAL AQUIFER
A(21-5) 11 cbc

E

Appendix E

GWSI and 55-Files

ADWR GWSI Water Levels
Greenfield Land Development

Cadastral Location	Reg. No.	Surf. Elev.	Measured	DTW	Water Elev.	Depth	UTM East	UTM West
A-21-05 01ACC1		7130	06/22/78	66.50	7064	0	425838	3898902
A-21-05 01ACC3	513656	7135	04/20/94	97.80	7037	100	425737	3898965
A-21-05 01ACC3	513656	7135	04/22/99	89.80	7045	100	425737	3898965
A-21-05 01ACC3	513656	7135	04/21/04	84.49	7051	100	425737	3898965
A-21-05 02ABC1	627253	7130	11/01/26	31.00	7099	122	424123	3899317
A-21-05 02ABC1	627253	7130	04/21/43	21.00	7109	122	424123	3899317
A-21-05 02ABC1	627253	7130	04/20/94	27.30	7103	122	424123	3899317
A-21-05 02ABC3	627254	7131	03/15/67	26.80	7104	110	424097	3899317
A-21-05 02ABC3	627254	7131	10/24/68	27.40	7104	110	424097	3899317
A-21-05 02ABC3	627254	7131	04/22/69	17.58	7113	110	424097	3899317
A-21-05 02ABC3	627254	7131	03/03/70	28.65	7102	110	424097	3899317
A-21-05 02ABC3	627254	7131	04/05/71	28.56	7102	110	424097	3899317
A-21-05 02ABC3	627254	7131	05/03/71	29.15	7102	110	424097	3899317
A-21-05 02ABC3	627254	7131	05/12/71	29.20	7102	110	424097	3899317
A-21-05 02ABC3	627254	7131	05/28/71	29.67	7101	110	424097	3899317
A-21-05 02ABC3	627254	7131	01/28/72	22.00	7109	110	424097	3899317
A-21-05 02ABC3	627254	7131	05/08/73	11.15	7120	110	424097	3899317
A-21-05 02ABC3	627254	7131	01/19/76	36.30	7095	110	424097	3899317
A-21-05 02ABC3	627254	7131	01/31/77	35.50	7096	110	424097	3899317
A-21-05 02ABC3	627254	7131	01/25/78	33.80	7097	110	424097	3899317
A-21-05 02ABC3	627254	7131	02/14/79	27.20	7104	110	424097	3899317
A-21-05 02ABC3	627254	7131	08/09/79	24.90	7106	110	424097	3899317
A-21-05 02ABC3	627254	7131	01/08/80	28.70	7102	110	424097	3899317
A-21-05 02ABC3	627254	7131	12/23/80	27.84	7103	110	424097	3899317
A-21-05 02ABC3	627254	7131	04/08/82	16.78	7114	110	424097	3899317
A-21-05 02ABC3	627254	7131	03/22/83	15.80	7115	110	424097	3899317
A-21-05 02ABC3	627254	7131	03/12/84	27.30	7104	110	424097	3899317
A-21-05 02ABC3	627254	7131	05/13/85	16.90	7114	110	424097	3899317
A-21-05 02ABC3	627254	7131	04/18/86	18.50	7113	110	424097	3899317
A-21-05 02ABC3	627254	7131	02/04/87	23.70	7107	110	424097	3899317
A-21-05 02ABC3	627254	7131	01/11/88	23.40	7108	110	424097	3899317
A-21-05 02ABC3	627254	7131	03/10/89	25.30	7106	110	424097	3899317
A-21-05 02ABC3	627254	7131	11/08/90	32.60	7098	110	424097	3899317
A-21-05 02ABC3	627254	7131	10/30/91	33.30	7098	110	424097	3899317
A-21-05 02ABC3	627254	7131	10/29/92	26.80	7104	110	424097	3899317
A-21-05 02ABC3	627254	7131	10/27/93	30.90	7100	110	424097	3899317
A-21-05 02ABC3	627254	7131	11/02/95	32.50	7099	110	424097	3899317
A-21-05 02ABC3	627254	7131	10/31/96	36.40	7095	110	424097	3899317
A-21-05 02ABC3	627254	7131	10/15/97	33.52	7097	110	424097	3899317
A-21-05 02ABC3	627254	7131	10/22/98	27.80	7103	110	424097	3899317
A-21-05 02ABC3	627254	7131	04/22/99	29.00	7102	110	424097	3899317
A-21-05 02ABC3	627254	7131	10/21/99	26.80	7104	110	424097	3899317
A-21-05 02ABC3	627254	7131	03/29/01	26.80	7104	110	424097	3899317
A-21-05 02ABC3	627254	7131	03/28/02	38.30	7093	110	424097	3899317
A-21-05 02ABC3	627254	7131	03/11/03	34.10	7097	110	424097	3899317
A-21-05 02ABC3	627254	7131	04/12/04	35.50	7096	110	424097	3899317
A-21-05 02ABC3	627254	7131	03/15/05	16.20	7115	110	424097	3899317
A-21-05 02ABC4		7130	08/01/71	125.00	7005	224	424148	3899286
A-21-05 02ACC1	557461	7130	05/21/99	65.08	7065	350	424169	3898824

ADWR GWSI Water Levels
Greenfield Land Development

Cadastral Location	Reg. No.	Surf. Elev.	Measured	DTW	Water Elev.	Depth	UTM East	UTM West
A-21-05 02ACC1	557461	7130	04/22/04	330.00	6800	350	424169	3898824
A-21-05 02ACC2	557462	7130	04/21/99	112.40	7018	145	422652	3898836
A-21-05 02ACC2	557462	7130	04/22/04	121.70	7008	145	422652	3898836
A-21-05 02ACC3	557463	7130	04/21/99	27.03	7103	45	424169	3898793
A-21-05 02ACC3	557463	7130	04/22/04	33.10	7097	45	424169	3898793
A-21-05 02BAA		7130	08/09/71	21.00	7109	100	424097	3899317
A-21-05 02BAD		7128	04/12/04	91.90	7036	335	425614	3899274
A-21-05 02CCC		7120	01/01/42	25.00	7095	90	423505	3898090
A-21-05 02DAB	806551	7120	08/02/78	14.10	7106	0	424597	3898574
A-21-05 10AAB1	530017	7055	04/18/94	5.00	7050	26	422895	3897694
A-21-05 10AAB1	530017	7055	04/21/99	0.40	7055	26	422895	3897694
A-21-05 10AAB1	530017	7055	04/22/04	6.90	7048	26	422895	3897694
A-21-05 10AAB2	530013	7055	04/22/04	0.00	0	29	422896	3897787
A-21-05 10AAB3		7055	04/18/94	4.70	7050	0	422896	3897787
A-21-05 10AAB3		7055	04/22/04	0.00	0	0	422896	3897787
A-21-05 10AAB4		7055	04/22/04	3.40	7052	0	422971	3897725
A-21-05 10AAD		7055	04/18/94	12.60	7042	0	423147	3897507
A-21-05 10AAD		7055	04/22/04	0.00	0	0	423147	3897507
A-21-05 10ABA1	530010	7061	04/18/94	13.40	7048	33	422872	3897880
A-21-05 10ABA1	530010	7061	04/21/99	9.09	7052	33	422872	3897880
A-21-05 10ABA1	530010	7061	04/22/04	0.00	0	33	422872	3897880
A-21-05 10ABA2		7055	04/18/94	6.60	7048	0	422871	3897818
A-21-05 10ABA2		7055	04/22/04	8.06	7047	0	422871	3897818
A-21-05 10ABA3	530011	7055	04/18/94	6.90	7048	29	422821	3897818
A-21-05 10ABA3	530011	7055	04/21/99	5.30	7050	29	422821	3897818
A-21-05 10ABD1		7055	04/18/94	0.00	0	0	422718	3897665
A-21-05 10ABD2		7055	04/18/94	0.00	0	0	422844	3897602
A-21-05 10ABD3	530015	7055	04/18/94	3.30	7052	60	422820	3897695
A-21-05 10ABD3	530015	7055	04/21/99	1.80	7053	60	422820	3897695
A-21-05 10ABD3	530015	7055	04/22/04	0.00	0	60	422820	3897695
A-21-05 10ADA		7050	04/22/04	14.32	7036	0	423197	3897476
A-21-05 10ADC	530018	7050	04/18/94	0.00	0	50	423043	3897231
A-21-05 11BCD1		7055	04/18/94	13.10	7042	0	423625	3897288
A-21-05 11BCD1		7055	04/21/99	10.34	7045	0	423625	3897288
A-21-05 11BCD1		7055	04/22/04	0.00	0	0	423625	3897288
A-21-05 11BCD2		7055	04/18/94	11.10	7044	0	423575	3897288
A-21-05 11BCD2		7055	04/22/04	0.00	0	0	423575	3897288
A-21-05 11BCD4		7055	04/18/94	9.60	7045	0	423574	3897227
A-21-05 11BCD4		7055	04/21/99	8.45	7047	0	423574	3897227
A-21-05 11BCD4		7055	04/22/04	0.00	0	0	423574	3897227
A-21-05 11BDA		7070	08/10/94	0.00	7070	0	424056	3897407
A-21-05 11CBC	805692	7060	08/28/50	1,273.00	5787	1647	423443	3896735
A-21-05 11CBC	805692	7060	04/19/94	0.00	0	1647	423443	3896735
A-21-05 11CBC	805692	7060	04/22/04	1,407.70	5652	1647	423443	3896735
A-21-05 11CBD		7050	04/18/94	3.10	7047	0	423572	3896980
A-21-05 11CBD		7050	04/21/99	3.07	7047	0	423572	3896980
A-21-05 11CBD		7050	04/22/04	16.30	7034	0	423572	3896980
A-21-05 12ACB1		7065	04/18/94	57.50	7008	0	425826	3897485
A-21-05 12ACB1		7065	04/21/99	65.70	6999	0	425826	3897485

ADWR GWSI Water Levels
Greenfield Land Development

Cadastral Location	Reg. No.	Surf. Elev.	Measured	DTW	Water Elev.	Depth	UTM East	UTM West
A-21-05 12ACC1		7050	04/18/94	26.00	7024	0	425775	3897331
A-21-05 12ACC1		7050	04/21/99	24.02	7026	0	425775	3897331
A-21-05 12DAD		7061	04/18/94	26.00	7035	0	426378	3896864
A-21-05 12DAD		7061	04/21/99	24.02	7037	0	426378	3896864
A-21-05 12DAD		7061	04/22/04	27.90	7033	0	426378	3896864
A-21-05 27ABA1		6980	04/19/94	3.60	6976	0	422804	3892951
A-21-05 27ABA2	560519	6991	04/21/99	171.80	6819	211	422704	3893075
A-21-05 27ABB1		7000	04/19/94	27.60	6972	0	422603	3893014
A-21-05 27ABB1		7000	04/21/99	0.00	0	0	422603	3893014
A-21-05 27ABB2	560288	6995	04/21/99	329.40	6666	353	422653	3893045
A-21-05 27ABB3	560289	6995	04/21/99	148.20	6847	159	422654	3893075
A-21-05 27BCA		7059	04/19/94	28.30	7031	0	421966	3892588
A-21-05 27BCA		7059	04/21/99	0.00	0	0	421966	3892588
A-21-06 06CCA1	801250	7130	09/06/49	19.00	7111	200	426794	3898278
A-21-06 06CCA1	801250	7130	04/20/94	110.40	7020	200	426794	3898278
A-21-06 06CCA1	801250	7130	11/02/94	113.85	7016	200	426794	3898278
A-21-06 06CCA1	801250	7130	11/02/95	108.90	7021	200	426794	3898278
A-21-06 06CCA1	801250	7130	10/30/96	123.40	7007	200	426794	3898278
A-21-06 06CCA1	801250	7130	10/15/97	117.40	7013	200	426794	3898278
A-21-06 06CCA1	801250	7130	10/22/98	102.30	7028	200	426794	3898278
A-21-06 06CCA1	801250	7130	04/22/99	100.50	7030	200	426794	3898278
A-21-06 06CCA1	801250	7130	10/21/99	102.50	7028	200	426794	3898278
A-21-06 06CCA1	801250	7130	03/29/01	107.20	7023	200	426794	3898278
A-21-06 06CCA1	801250	7130	03/28/02	125.55	7004	200	426794	3898278
A-21-06 06CCA1	801250	7130	03/11/03	125.40	7005	200	426794	3898278
A-21-06 06CCA1	801250	7130	04/12/04	124.40	7006	200	426794	3898278
A-21-06 06CCA1	801250	7130	03/15/05	91.60	7038	200	426794	3898278
A-21-06 06CCA2		7130	08/09/79	9.55	7120	0	426844	3898216
A-21-06 06CCA2		7130	04/12/04	0.00	0	0	426844	3898216
A-21-06 06CCA3		7130		19.15	7111	0	426844	3898216
A-21-06 06CDD		7135	04/07/70	19.15	7116	210	427222	3898090
A-21-06 06CDD		7135	04/20/94	90.70	7044	210	427222	3898090
A-21-06 06CDD		7135	04/22/99	82.50	7053	210	427222	3898090
A-21-06 06CDD		7135	04/21/04	105.70	7029	210	427222	3898090
A-21-06 07CBB		7100	04/18/94	57.50	7043	0	426606	3896955
A-21-06 07CBB		7100	04/21/99	65.70	7034	0	426606	3896955
A-21-06 07CBB		7100	04/22/04	93.80	7006	0	426606	3896955
A-21-06 23AAD	541534	7220	06/29/94	1,258.40	5962	1600	434527	3894522
A-21-06 35BCC	606203	7129	11/19/58	1,213.00	5916	1900	433007	3890744
A-21-06 35BCC	606203	7129	04/19/94	1,243.00	5886	1900	433007	3890744
A-21-06 35BCC	606203	7129	04/20/99	1,225.00	5904	1900	433007	3890744
A-21-06 35BCC	606203	7129	01/01/00	1,254.00	5875	1900	433007	3890744
A-21-06 35CBA	606201	7137	12/07/54	1,295.50	5842	1600	433182	3890465
A-21-06 35CBA	606201	7137	12/08/54	1,228.00	5909	1600	433182	3890465
A-21-06 35CBA	606201	7137	01/25/58	1,229.30	5908	1600	433182	3890465
A-21-06 35CBA	606201	7137	11/19/58	1,229.40	5908	1600	433182	3890465
A-21-06 35CBA	606201	7137	01/21/60	1,232.40	5905	1600	433182	3890465
A-21-06 35CBA	606201	7137	05/30/62	1,235.50	5902	1600	433182	3890465
A-21-06 35CBA	606201	7137	06/13/63	1,235.20	5902	1600	433182	3890465

ADWR GWSI Water Levels
Greenfield Land Development

Cadastral Location	Reg. No.	Surf. Elev.	Measured	DTW	Water Elev.	Depth	UTM East	UTM West
A-21-06 35CBA	606201	7137	05/08/64	1,241.20	5896	1600	433182	3890465
A-21-06 35CBA	606201	7137	03/16/66	1,236.00	5901	1600	433182	3890465
A-21-06 35CBA	606201	7137	01/09/67	1,237.00	5900	1600	433182	3890465
A-21-06 35CBA	606201	7137	02/09/68	1,229.24	5908	1600	433182	3890465
A-21-06 35CBA	606201	7137	05/02/69	1,238.00	5899	1600	433182	3890465
A-21-06 35CBA	606201	7137	04/13/70	1,221.31	5916	1600	433182	3890465
A-21-06 35CBA	606201	7137	04/13/71	1,234.35	5903	1600	433182	3890465
A-21-06 35CBA	606201	7137	01/25/72	1,236.70	5900	1600	433182	3890465
A-21-06 35CBA	606201	7137	01/26/73	1,241.50	5896	1600	433182	3890465
A-21-06 35CBA	606201	7137	03/06/74	1,226.40	5911	1600	433182	3890465
A-21-06 35CBA	606201	7137	02/28/75	1,233.73	5903	1600	433182	3890465
A-21-06 35CBA	606201	7137	01/26/76	1,231.30	5906	1600	433182	3890465
A-21-06 35CBA	606201	7137	02/02/77	1,232.40	5905	1600	433182	3890465
A-21-06 35CBA	606201	7137	01/01/79	1,247.00	5890	1600	433182	3890465
A-21-06 35CBA	606201	7137	06/01/79	1,229.00	5908	1600	433182	3890465
A-21-06 35CBA	606201	7137	11/01/79	1,239.00	5898	1600	433182	3890465
A-21-06 35CBA	606201	7137	01/01/80	1,242.00	5895	1600	433182	3890465
A-21-06 35CBA	606201	7137	11/02/81	1,221.00	5916	1600	433182	3890465
A-21-06 35CBA	606201	7137	12/17/82	1,236.00	5901	1600	433182	3890465
A-21-06 35CBA	606201	7137	01/04/83	1,239.00	5898	1600	433182	3890465
A-21-06 35CBA	606201	7137	02/16/83	1,208.00	5929	1600	433182	3890465
A-21-06 35CBA	606201	7137	12/20/83	1,243.00	5894	1600	433182	3890465
A-21-06 35CBA	606201	7137	01/19/84	1,245.00	5892	1600	433182	3890465
A-21-06 35CBA	606201	7137	12/21/84	1,253.00	5884	1600	433182	3890465
A-21-06 35CBA	606201	7137	12/11/85	1,237.80	5899	1600	433182	3890465
A-21-06 35CBA	606201	7137	03/25/87	1,248.50	5889	1600	433182	3890465
A-21-06 35CBA	606201	7137	04/11/88	1,246.30	5891	1600	433182	3890465
A-21-06 35CBA	606201	7137	12/08/88	1,246.80	5890	1600	433182	3890465
A-21-06 35CBA	606201	7137	11/06/90	1,271.20	5866	1600	433182	3890465
A-21-06 35CBA	606201	7137	10/29/91	1,271.80	5865	1600	433182	3890465
A-21-06 35CBA	606201	7137	11/01/92	1,263.10	5874	1600	433182	3890465
A-21-06 35CBA	606201	7137	10/26/93	1,259.00	5878	1600	433182	3890465
A-21-06 35CBA	606201	7137	04/19/94	1,260.00	5877	1600	433182	3890465
A-21-06 35CBA	606201	7137	10/31/94	1,263.00	5874	1600	433182	3890465
A-21-06 35CBA	606201	7137	06/01/98	1,235.00	5902	1600	433182	3890465
A-21-06 35CBA	606201	7137	11/12/98	1,234.60	5902	1600	433182	3890465
A-21-06 35CBA	606201	7137	10/19/99	1,450.00	5687	1600	433182	3890465
A-21-06 35CBA	606201	7137	01/01/00	1,241.00	5896	1600	433182	3890465
A-21-06 35CBA	606201	7137	10/19/00	1,501.00	5636	1600	433182	3890465
A-21-06 35CBA	606201	7137	10/17/01	1,404.00	5733	1600	433182	3890465
A-21-06 35CBA	606201	7137	01/22/03	1,245.00	5892	1600	433182	3890465
A-21-06 35CBA	606201	7137	12/30/03	1,239.00	5898	1600	433182	3890465
A-21-06 35CBA	606201	7137	11/05/04	1,241.00	5896	1600	433182	3890465
A-21-06 35CCB	606202	7167	11/19/58	1,246.60	5920	1746	432978	3890220
A-21-06 35CCB	606202	7167	04/19/94	1,421.00	5742	1746	432978	3890220
A-21-06 35CCB	606202	7167	04/19/94	1,261.00	5906	1746	432978	3890220
A-21-06 35CCB	606202	7167	03/19/99	1,245.00	5922	1746	432978	3890220
A-21-06 35CCB	606202	7167	04/20/99	1,132.00	6031	1746	432978	3890220
-21-06 35CCB	606202	7167	01/01/00	1,186.00	5977	1746	432978	3890220

ADWR GWSI Water Levels
Greenfield Land Development

Cadastral Location	Reg. No.	Surf. Elev.	Measured	DTW	Water Elev.	Depth	UTM East	UTM West
A-21-06 35CCB	606202	7167	01/01/00	1,278.00	5889	1746	432978	3890220
A-21-06 35CCC	606204	7163	11/19/58	1,083.00	6080	1540	432976	3889912
A-22-04 26DBB1	521864	7104	04/21/94	92.80	7011	115	418508	3901769
A-22-04 26DBB1	521864	7104	04/21/99	92.10	7012	115	418508	3901769
A-22-05 16DBC	610507	7470	06/29/94	702.80	6767	850	421164	3905011
A-22-05 16DBC	610507	7470	04/20/99	725.10	6745	850	421164	3905011
A-22-05 16DBC	610507	7470	04/30/04	0.00	0	850	421164	3905011
A-22-05 19CCB		7240	03/01/74	16.00	7224	86	417079	3903045
A-22-05 20ADA		7279	04/23/04	174.66	7104	0	420120	3904065
A-22-05 20DAA	579604	7269	04/23/04	211.35	7058	0	420115	3903449
A-22-05 21CCC		7260	04/23/04	0.00	0	368	420261	3902893
A-22-05 26ACD		7230	07/01/53	2,120.00	5110	0	424499	3902025
A-22-05 26ACD		7230	04/12/04	0.00	0	0	424499	3902025
A-22-05 26ADC1		7235	04/12/04	0.00	0	550	424576	3902117
A-22-05 26ADC2		7230	08/03/53	2,010.00	5220	0	424676	3902023
A-22-05 26ADC2		7230	04/12/04	0.00	0	0	424676	3902023
A-22-05 27DDD	524148	7200	04/21/94	173.20	7027	300	423229	3901235
A-22-05 28BBB		7260	06/06/78	78.80	7181	100	420235	3902832
A-22-05 28BBB		7260	04/23/04	89.18	7171	100	420235	3902832
A-22-05 35DCC1		7128	04/20/94	26.77	7101	0	424276	3899531
A-22-05 35DCC1		7128	04/21/04	144.90	6983	0	424276	3899531
A-22-05 35DCC2		7128	04/20/94	26.60	7101	0	424276	3899531
A-22-05 35DCC2		7128	04/22/99	29.20	7099	0	424276	3899531
A-22-05 35DCC2		7128	04/21/04	35.20	7093	0	424276	3899531
A-22-05 35DCC3		7128	04/21/04	0.00	0	0	424250	3899501
A-22-05 36CCC1		7129	04/22/99	103.50	7026	0	425085	3899555
A-22-05 36CCC1		7129	04/21/04	113.40	7016	0	425085	3899555
A-22-05 36CCC2		7128	04/21/04	0.00	0	0	424935	3899741
A-22-05 36CCC3		7129	04/21/04	153.90	6975	0	425010	3899679
A-22-05 36CCD1		7130	06/06/78	18.50	7112	224	425136	3899617
A-22-05 36CCD1		7130	04/19/94	107.40	7023	224	425136	3899617
A-22-06 18DCC		7555	04/12/04	0.00	0	0	427627	3904495
A-22-06 23BAB	511372	7432	08/07/89	253.50	7179	300	433638	3904325
A-22-06 23BAB	511372	7432	06/14/01	250.40	7182	300	433638	3904325
A-22-06 23BCB	613506	7390	08/07/89	164.60	7225	191	433130	3903836
A-22-06 23BCB	613506	7390	06/14/01	165.10	7225	191	433130	3903836
A-22-06 23BCC1	613505	7380	02/22/88	138.80	7241	175	433204	3903681
A-22-06 23BCC1	613505	7380	08/07/89	140.10	7240	175	433204	3903681
A-22-06 23BCC2	803104	7390	07/11/77	161.40	7229	250	433128	3903682
A-22-06 23BCC2	803104	7390	08/07/89	142.20	7248	250	433128	3903682
A-22-06 23CBB1	503894	7380	02/22/88	134.40	7246	265	433178	3903528
A-22-06 23CBB1	503894	7380	08/07/89	135.30	7245	265	433178	3903528
A-22-06 23CBB2	504135	7375	02/22/88	141.40	7234	195	433228	3903496
A-22-06 23CBB2	504135	7375	08/07/89	146.10	7229	195	433228	3903496
A-22-06 23CBC1	606967	7380	08/07/89	127.90	7252	185	433202	3903373
A-22-06 23CCB1	631059	7360	08/08/89	115.40	7245	182	433226	3903188
A-22-06 23CCB2	643882	7350	02/23/88	99.20	7251	192	433225	3903127
A-22-06 23CCC	504028	7322	02/23/88	85.70	7236	250	433123	3902912
A-22-06 23CCC	504028	7322	08/07/89	101.90	7220	250	433123	3902912

ADWR GWSI Water Levels
Greenfield Land Development

Cadastral Location	Reg. No.	Surf. Elev.	Measured	DTW	Water Elev.	Depth	UTM East	UTM West
A-22-06 23CDA1		7320	06/17/44	4.51	7315	21	433756	3903092
A-22-06 23CDA1		7320	08/13/44	7.49	7313	21	433756	3903092
A-22-06 23CDA1		7320	06/05/45	4.33	7316	21	433756	3903092
A-22-06 23CDA1		7320	09/28/45	10.19	7310	21	433756	3903092
A-22-06 23CDA1		7320	06/22/46	5.91	7314	21	433756	3903092
A-22-06 23CDA1		7320	10/03/46	5.16	7315	21	433756	3903092
A-22-06 23CDA1		7320	06/13/47	18.94	7301	21	433756	3903092
A-22-06 23CDA1		7320	06/04/48	8.65	7311	21	433756	3903092
A-22-06 23CDA1		7320	10/15/48	11.99	7308	21	433756	3903092
A-22-06 23CDA1		7320	07/12/49	3.98	7316	21	433756	3903092
A-22-06 23CDA1		7320	08/05/50	4.63	7315	21	433756	3903092
A-22-06 23CDA1		7320	08/05/51	12.58	7307	21	433756	3903092
A-22-06 23CDA1		7320	07/05/52	4.53	7315	21	433756	3903092
A-22-06 23CDA1		7320	07/28/53	7.32	7313	21	433756	3903092
A-22-06 23CDA1		7320	08/15/79	7.30	7313	21	433756	3903092
A-22-06 23CDA1		7320	08/07/89	4.50	7316	21	433756	3903092
A-22-06 23CDA2	601125	7325	02/23/88	95.80	7229	190	433757	3903215
A-22-06 23CDA2	601125	7325	08/08/89	98.10	7227	190	433757	3903215
A-22-06 23CDA2	601125	7325	06/12/01	113.30	7212	190	433757	3903215
A-22-06 23CDC		7315	01/01/61	90.00	7225	112	433603	3902878
A-22-06 23CDC		7315	06/12/01	0.00	0	112	433603	3902878
A-22-06 23CDD	802058	7325	06/12/01	94.20	7231	160	433679	3903031
A-22-06 23DBA2	510980	7360	08/07/89	118.70	7241	176	434238	3903397
A-22-06 23DBC1		7339	01/04/67	60.00	7279	185	433985	3903398
A-22-06 23DBC2		7335	04/19/77	125.89	7209	157	434035	3903336
A-22-06 23DBC3	644021	7332	04/19/77	114.15	7218	127	433960	3903368
A-22-06 23DBC3	644021	7332	02/23/88	114.10	7218	127	433960	3903368
A-22-06 23DBC3	644021	7332	08/08/89	117.40	7215	127	433960	3903368
A-22-06 23DBC3	644021	7332	05/22/91	120.70	7211	127	433960	3903368
A-22-06 23DBC3	644021	7332	08/08/91	117.50	7215	127	433960	3903368
A-22-06 23DBC3	644021	7332	11/12/91	116.80	7215	127	433960	3903368
A-22-06 23DBC3	644021	7332	02/14/92	117.50	7215	127	433960	3903368
A-22-06 23DBC3	644021	7332	05/13/92	115.90	7216	127	433960	3903368
A-22-06 23DBC3	644021	7332	08/18/92	113.50	7219	127	433960	3903368
A-22-06 23DBC3	644021	7332	11/11/92	113.90	7218	127	433960	3903368
A-22-06 23DBC3	644021	7332	05/11/93	109.10	7223	127	433960	3903368
A-22-06 23DBC3	644021	7332	08/18/93	109.90	7222	127	433960	3903368
A-22-06 23DBC3	644021	7332	11/18/93	111.20	7221	127	433960	3903368
A-22-06 23DBC3	644021	7332	02/16/94	113.20	7219	127	433960	3903368
A-22-06 23DBC3	644021	7332	05/18/94	114.40	7218	127	433960	3903368
A-22-06 23DBC3	644021	7332	08/17/94	115.50	7217	127	433960	3903368
A-22-06 23DBC3	644021	7332	11/14/94	117.00	7215	127	433960	3903368
A-22-06 23DBC3	644021	7332	05/15/95	112.50	7220	127	433960	3903368
A-22-06 23DBC3	644021	7332	08/17/95	111.40	7221	127	433960	3903368
A-22-06 23DBC3	644021	7332	11/14/95	113.40	7219	127	433960	3903368
A-22-06 23DBC3	644021	7332	02/13/96	115.00	7217	127	433960	3903368
A-22-06 23DBC3	644021	7332	05/16/96	116.60	7215	127	433960	3903368
A-22-06 23DBC3	644021	7332	08/15/96	118.90	7213	127	433960	3903368
A-22-06 23DBC3	644021	7332	11/14/96	120.10	7212	127	433960	3903368

ADWR GWSI Water Levels
Greenfield Land Development

Cadastral Location	Reg. No.	Surf. Elev.	Measured	DTW	Water Elev.	Depth	UTM East	UTM West
A-22-06 23DBC3	644021	7332	05/13/97	123.50	7209	127	433960	3903368
A-22-06 23DBC3	644021	7332	08/14/97	120.30	7212	127	433960	3903368
A-22-06 23DBC3	644021	7332	11/12/97	120.30	7212	127	433960	3903368
A-22-06 23DBC3	644021	7332	02/12/98	122.10	7210	127	433960	3903368
A-22-06 23DBC3	644021	7332	05/14/98	118.80	7213	127	433960	3903368
A-22-06 23DBC3	644021	7332	08/12/98	114.96	7217	127	433960	3903368
A-22-06 23DBC3	644021	7332	11/19/98	114.40	7218	127	433960	3903368
A-22-06 23DBC3	644021	7332	02/08/99	115.10	7217	127	433960	3903368
A-22-06 23DBC3	644021	7332	05/12/99	118.60	7213	127	433960	3903368
A-22-06 23DBC3	644021	7332	08/13/99	118.30	7214	127	433960	3903368
A-22-06 23DBC3	644021	7332	11/11/99	120.00	7212	127	433960	3903368
A-22-06 23DBC3	644021	7332	02/09/00	120.66	7211	127	433960	3903368
A-22-06 23DBC3	644021	7332	05/10/00	121.70	7210	127	433960	3903368
A-22-06 23DBC3	644021	7332	08/09/00	121.90	7210	127	433960	3903368
A-22-06 23DBC3	644021	7332	11/16/00	124.90	7207	127	433960	3903368
A-22-06 23DBC3	644021	7332	02/15/01	129.15	7203	127	433960	3903368
A-22-06 23DBC3	644021	7332	05/14/01	123.40	7209	127	433960	3903368
A-22-06 23DBC3	644021	7332	08/16/01	123.80	7208	127	433960	3903368
A-22-06 23DBC3	644021	7332	11/14/01	123.75	7208	127	433960	3903368
A-22-06 23DBC3	644021	7332	02/11/02	123.71	7208	127	433960	3903368
A-22-06 23DBC3	644021	7332	05/13/02	124.40	7208	127	433960	3903368
A-22-06 23DBC3	644021	7332	08/14/02	124.75	7207	127	433960	3903368
A-22-06 23DBC3	644021	7332	11/14/02	124.65	7207	127	433960	3903368
A-22-06 23DBC3	644021	7332	02/10/03	124.80	7207	127	433960	3903368
A-22-06 23DBC3	644021	7332	05/15/03	124.75	7207	127	433960	3903368
A-22-06 23DBC3	644021	7332	08/14/03	125.20	7207	127	433960	3903368
A-22-06 23DBC3	644021	7332	11/21/03	125.00	7207	127	433960	3903368
A-22-06 23DBC3	644021	7332	02/17/04	125.30	7207	127	433960	3903368
A-22-06 23DBC3	644021	7332	05/13/04	125.50	7207	127	433960	3903368
A-22-06 23DBC3	644021	7332	08/18/04	125.60	7206	127	433960	3903368
A-22-06 23DBC3	644021	7332	11/17/04	125.70	7206	127	433960	3903368
A-22-06 23DBC3	644021	7332	03/09/05	125.60	7206	127	433960	3903368
A-22-06 23DBC3	644021	7332	05/18/05	118.10	7214	127	433960	3903368
A-22-06 23DBD1		7340	02/16/71	150.00	7190	255	434187	3903274
A-22-06 23DBD2		7340		140.00	7200	160	434187	3903366
A-22-06 23DCA1		7330	08/08/89	103.40	7227	114	434085	3903213
A-22-06 23DCA2		7335	08/29/68	139.00	7196	208	434211	3903181
A-22-06 23DCA2		7335	08/08/89	154.30	7181	208	434211	3903181
A-22-06 23DCA3		7330	04/18/77	118.83	7211	148	434085	3903151
A-22-06 23DCB	515470	7325	08/08/89	91.50	7234	0	433984	3903152
A-22-06 23DCB	515470	7325	06/12/01	103.50	7222	0	433984	3903152
A-22-06 23DDC	601319	7330	07/20/78	117.00	7213	160	434260	3902996
A-22-06 23DDC	601319	7330	06/26/79	112.84	7217	160	434260	3902996
A-22-06 23DDD	632843	7340	02/23/88	141.80	7198	207	434613	3902901
A-22-06 23DDD	632843	7340	08/08/89	156.20	7184	207	434613	3902901
A-22-06 25BBB	601851	7339	04/19/77	115.70	7223	220	434663	3902808
A-22-06 25BBB	601851	7339	07/11/77	117.20	7222	220	434663	3902808
A-22-06 25BBB	601851	7339	01/25/78	111.00	7228	220	434663	3902808
-22-06 25BBB	601851	7339	02/14/79	113.90	7225	220	434663	3902808

ADWR GWSI Water Levels
Greenfield Land Development

Cadastral Location	Reg. No.	Surf. Elev.	Measured	DTW	Water Elev.	Depth	UTM East	UTM West
A-22-06 25BBB	601851	7339	02/22/88	169.10	7170	220	434663	3902808
A-22-06 25BBB	601851	7339	08/07/89	169.80	7169	220	434663	3902808
A-22-06 25BBB	601851	7339	06/07/01	169.50	7170	220	434663	3902808
A-22-06 25BBC1		7322	02/22/88	182.70	7139	0	434687	3902562
A-22-06 25BBC1		7322	08/07/89	187.20	7135	0	434687	3902562
A-22-06 25BBC1		7322	05/22/91	181.45	7141	0	434687	3902562
A-22-06 25BBC1		7322	08/08/91	185.30	7137	0	434687	3902562
A-22-06 25BBC1		7322	11/12/91	184.90	7137	0	434687	3902562
A-22-06 25BBC1		7322	02/14/92	186.80	7135	0	434687	3902562
A-22-06 25BBC1		7322	05/13/92	184.50	7138	0	434687	3902562
A-22-06 25BBC1		7322	08/18/92	185.00	7137	0	434687	3902562
A-22-06 25BBC1		7322	11/11/92	182.00	7140	0	434687	3902562
A-22-06 25BBC1		7322	05/11/93	177.10	7145	0	434687	3902562
A-22-06 25BBC1		7322	08/18/93	185.60	7136	0	434687	3902562
A-22-06 25BBC1		7322	11/18/93	182.70	7139	0	434687	3902562
A-22-06 25BBC1		7322	02/16/94	187.30	7135	0	434687	3902562
A-22-06 25BBC1		7322	05/18/94	184.30	7138	0	434687	3902562
A-22-06 25BBC1		7322	08/17/94	184.50	7138	0	434687	3902562
A-22-06 25BBC1		7322	11/14/94	182.50	7140	0	434687	3902562
A-22-06 25BBC1		7322	02/13/95	181.80	7140	0	434687	3902562
A-22-06 25BBC1		7322	05/15/95	183.40	7139	0	434687	3902562
A-22-06 25BBC1		7322	08/17/95	184.80	7137	0	434687	3902562
A-22-06 25BBC1		7322	11/14/95	182.40	7140	0	434687	3902562
A-22-06 25BBC1		7322	02/13/96	184.60	7137	0	434687	3902562
A-22-06 25BBC1		7322	05/16/96	184.50	7138	0	434687	3902562
A-22-06 25BBC1		7322	08/15/96	184.30	7138	0	434687	3902562
A-22-06 25BBC1		7322	11/14/96	183.70	7138	0	434687	3902562
A-22-06 25BBC1		7322	05/13/97	185.10	7137	0	434687	3902562
A-22-06 25BBC1		7322	08/14/97	185.55	7136	0	434687	3902562
A-22-06 25BBC1		7322	11/12/97	183.10	7139	0	434687	3902562
A-22-06 25BBC1		7322	02/12/98	183.00	7139	0	434687	3902562
A-22-06 25BBC1		7322	05/14/98	182.90	7139	0	434687	3902562
A-22-06 25BBC1		7322	08/12/98	186.21	7136	0	434687	3902562
A-22-06 25BBC1		7322	11/19/98	182.00	7140	0	434687	3902562
A-22-06 25BBC1		7322	02/08/99	181.82	7140	0	434687	3902562
A-22-06 25BBC1		7322	05/12/99	185.26	7137	0	434687	3902562
A-22-06 25BBC1		7322	08/13/99	184.60	7137	0	434687	3902562
A-22-06 25BBC1		7322	11/11/99	182.80	7139	0	434687	3902562
A-22-06 25BBC1		7322	02/09/00	182.40	7140	0	434687	3902562
A-22-06 25BBC1		7322	05/10/00	182.60	7139	0	434687	3902562
A-22-06 25BBC1		7322	08/09/00	188.40	7134	0	434687	3902562
A-22-06 25BBC1		7322	11/16/00	186.00	7136	0	434687	3902562
A-22-06 25BBC1		7322	02/15/01	188.50	7134	0	434687	3902562
A-22-06 25BBC1		7322	05/14/01	183.20	7139	0	434687	3902562
A-22-06 25BBC1		7322	08/16/01	186.95	7135	0	434687	3902562
A-22-06 25BBC1		7322	11/14/01	184.65	7137	0	434687	3902562
A-22-06 25BBC1		7322	02/11/02	188.60	7133	0	434687	3902562
A-22-06 25BBC1		7322	05/13/02	183.40	7139	0	434687	3902562
-22-06 25BBC1		7322	08/14/02	189.30	7133	0	434687	3902562

ADWR GWSI Water Levels
Greenfield Land Development

Cadastral Location	Reg. No.	Surf. Elev.	Measured	DTW	Water Elev.	Depth	UTM East	UTM West
A-22-06 25BBC1		7322	11/14/02	183.69	7138	0	434687	3902562
A-22-06 25BBC1		7322	02/10/03	183.19	7139	0	434687	3902562
A-22-06 25BBC1		7322	05/15/03	190.36	7132	0	434687	3902562
A-22-06 25BBC1		7322	08/14/03	188.10	7134	0	434687	3902562
A-22-06 25BBC1		7322	11/21/03	183.30	7139	0	434687	3902562
A-22-06 25BBC1		7322	02/17/04	182.80	7139	0	434687	3902562
A-22-06 25BBC1		7322	05/13/04	183.50	7139	0	434687	3902562
A-22-06 25BBC1		7322	08/18/04	186.90	7135	0	434687	3902562
A-22-06 25BBC1		7322	11/17/04	183.60	7138	0	434687	3902562
A-22-06 25BBC1		7322	03/09/05	174.40	7148	0	434687	3902562
A-22-06 25BBC1		7322	05/18/05	183.50	7139	0	434687	3902562
A-22-06 25BCB	512336	7310	06/14/01	231.00	7079	250	434861	3902252
A-22-06 25BCC		7300	06/15/01	0.00	0	0	434683	3902069
A-22-06 25BCD		7310	06/14/01	228.60	7081	0	434886	3902221
A-22-06 25CAB1		7320	04/18/77	152.50	7168	250	435188	3901942
A-22-06 25CAB1		7320	02/22/88	152.00	7168	250	435188	3901942
A-22-06 25CAB1		7320	08/08/89	201.90	7118	250	435188	3901942
A-22-06 25CAB2	601778	7300	03/06/67	48.00	7252	258	435112	3901973
A-22-06 25CAB2	601778	7300	08/08/89	178.90	7121	258	435112	3901973
A-22-06 25CAB3	600511	7310	02/22/88	166.20	7144	320	435163	3902004
A-22-06 25CAB3	600511	7310	08/08/89	177.70	7132	320	435163	3902004
A-22-06 25CAB3	600511	7310	05/22/91	164.70	7145	320	435163	3902004
A-22-06 25CAB3	600511	7310	08/08/91	165.90	7144	320	435163	3902004
A-22-06 25CAB3	600511	7310	11/12/91	166.40	7144	320	435163	3902004
A-22-06 25CAB3	600511	7310	05/13/92	168.70	7141	320	435163	3902004
A-22-06 25CAB3	600511	7310	08/18/92	173.10	7137	320	435163	3902004
A-22-06 25CAB3	600511	7310	11/11/92	151.30	7159	320	435163	3902004
A-22-06 25CAB3	600511	7310	05/11/93	165.40	7145	320	435163	3902004
A-22-06 25CAB3	600511	7310	08/18/93	165.70	7144	320	435163	3902004
A-22-06 25CAB3	600511	7310	11/18/93	156.80	7153	320	435163	3902004
A-22-06 25CAB3	600511	7310	02/16/94	155.20	7155	320	435163	3902004
A-22-06 25CAB3	600511	7310	05/18/94	151.32	7159	320	435163	3902004
A-22-06 25CAB3	600511	7310	08/17/94	186.00	7124	320	435163	3902004
A-22-06 25CAB3	600511	7310	11/15/94	205.80	7104	320	435163	3902004
A-22-06 25CAB3	600511	7310	05/15/95	202.95	7107	320	435163	3902004
A-22-06 25CAB3	600511	7310	08/17/95	204.50	7106	320	435163	3902004
A-22-06 25CAB3	600511	7310	11/14/95	204.60	7105	320	435163	3902004
A-22-06 25CAB3	600511	7310	02/13/96	207.60	7102	320	435163	3902004
A-22-06 25CAB3	600511	7310	05/16/96	207.80	7102	320	435163	3902004
A-22-06 25CAB3	600511	7310	08/15/96	208.20	7102	320	435163	3902004
A-22-06 25CAB3	600511	7310	11/14/96	209.90	7100	320	435163	3902004
A-22-06 25CAB3	600511	7310	02/05/97	209.80	7100	320	435163	3902004
A-22-06 25CAB3	600511	7310	05/13/97	208.30	7102	320	435163	3902004
A-22-06 25CAB3	600511	7310	11/12/97	160.40	7150	320	435163	3902004
A-22-06 25CAB3	600511	7310	05/14/98	207.80	7102	320	435163	3902004
A-22-06 25CAB3	600511	7310	08/12/98	208.20	7102	320	435163	3902004
A-22-06 25CAB3	600511	7310	11/19/98	203.00	7107	320	435163	3902004
A-22-06 25CAB3	600511	7310	02/08/99	203.50	7107	320	435163	3902004
22-06 25CAB3	600511	7310	05/12/99	208.80	7101	320	435163	3902004

ADWR GWSI Water Levels
Greenfield Land Development

Cadastral Location	Reg. No.	Surf. Elev.	Measured	DTW	Water Elev.	Depth	UTM East	UTM West
A-22-06 25CAB3	600511	7310	08/13/99	202.40	7108	320	435163	3902004
A-22-06 25CAB3	600511	7310	11/11/99	208.90	7101	320	435163	3902004
A-22-06 25CAB3	600511	7310	02/09/00	208.50	7102	320	435163	3902004
A-22-06 25CAB3	600511	7310	05/10/00	208.90	7101	320	435163	3902004
A-22-06 25CAB3	600511	7310	08/09/00	208.60	7101	320	435163	3902004
A-22-06 25CAB3	600511	7310	11/16/00	209.10	7101	320	435163	3902004
A-22-06 25CAB3	600511	7310	02/15/01	209.15	7101	320	435163	3902004
A-22-06 25CAB3	600511	7310	05/14/01	218.50	7092	320	435163	3902004
A-22-06 25CAB3	600511	7310	08/16/01	210.20	7100	320	435163	3902004
A-22-06 25CAB3	600511	7310	11/14/01	207.90	7102	320	435163	3902004
A-22-06 25CAB3	600511	7310	02/11/02	208.20	7102	320	435163	3902004
A-22-06 25CAB3	600511	7310	05/13/02	207.40	7103	320	435163	3902004
A-22-06 25CAB3	600511	7310	08/14/02	207.30	7103	320	435163	3902004
A-22-06 25CAB3	600511	7310	11/14/02	209.00	7101	320	435163	3902004
A-22-06 25CAB3	600511	7310	02/10/03	209.60	7100	320	435163	3902004
A-22-06 25CAB3	600511	7310	05/15/03	169.90	7140	320	435163	3902004
A-22-06 25CAB3	600511	7310	08/14/03	200.70	7109	320	435163	3902004
A-22-06 25CAB3	600511	7310	11/21/03	173.60	7136	320	435163	3902004
A-22-06 25CAB3	600511	7310	02/18/04	192.60	7117	320	435163	3902004
A-22-06 25CAB3	600511	7310	05/13/04	197.15	7113	320	435163	3902004
A-22-06 25CAB3	600511	7310	08/18/04	197.10	7113	320	435163	3902004
A-22-06 25CAB3	600511	7310	11/17/04	196.80	7113	320	435163	3902004
A-22-06 25CAB3	600511	7310	03/09/05	195.30	7115	320	435163	3902004
A-22-06 25CAB3	600511	7310	05/18/05	168.50	7142	320	435163	3902004
A-22-06 25CAC1	802954	7300	06/26/79	44.25	7256	80	435060	3901696
A-22-06 25CAC1	802954	7300	08/08/89	48.70	7251	80	435060	3901696
A-22-06 25CAC2	802955	7300	06/26/79	5.70	7294	40	435085	3901696
A-22-06 25CAC2	802955	7300	02/22/88	4.90	7295	40	435085	3901696
A-22-06 25CAC2	802955	7300	08/08/89	8.30	7292	40	435085	3901696
A-22-06 25CAC3		7300	10/18/63	169.00	7131	260	435085	3901789
A-22-06 25CAC6		7300	08/08/89	52.10	7248	0	435135	3901696
A-22-06 25CAD1	802912	7300	02/22/88	151.70	7148	236	435261	3901664
A-22-06 25CAD1	802912	7300	08/08/89	151.80	7148	236	435261	3901664
A-22-06 25CAD3		7300	08/08/89	66.00	7234	0	435262	3901787
A-22-06 25CBB		7297	08/07/89	4.20	7293	0	434707	3901884
A-22-06 25CBC		7290	08/10/77	52.90	7237	117	434808	3901791
A-22-06 25CBD		7300	06/26/79	49.10	7251	160	435009	3901758
A-22-06 25CCC2	637413	7360	08/10/77	127.60	7232	0	434703	3901360
A-22-06 25CDB1	802913	7300	06/26/79	82.40	7218	107	435236	3901572
A-22-06 25CDB2	626775	7300	06/26/79	44.80	7255	80	435185	3901634
A-22-06 26AAA		7335	02/23/88	0.00	0	1540	434638	3902839
A-22-06 26AAA		7335	06/06/01	0.00	0	1540	434638	3902839
A-22-06 26ABB	558976	7320	06/07/01	84.99	7235	210	433880	3902814
A-22-06 26ACB2	512373	7301	08/07/89	78.80	7222	130	433876	3902259
A-22-06 26BAA	625728	7319	04/18/77	87.55	7231	188	433754	3902815
A-22-06 26BAA	625728	7319	07/11/77	87.95	7231	188	433754	3902815
A-22-06 26BAA	625728	7319	06/25/79	62.57	7256	188	433754	3902815
A-22-06 26BAA	625728	7319	08/07/89	84.30	7235	188	433754	3902815
A-22-06 26BAA	625728	7319	06/12/01	83.80	7235	188	433754	3902815

ADWR GWSI Water Levels
Greenfield Land Development

Cadastral Location	Reg. No.	Surf. Elev.	Measured	DTW	Water Elev.	Depth	UTM East	UTM West
A-22-06 26BBB		7320	06/07/01	71.20	7249	0	433071	3902789
A-22-06 26BCA1		7303	08/08/89	67.40	7236	0	433422	3902355
A-22-06 26BCA2		7301	08/08/89	55.30	7246	0	433296	3902356
A-22-06 26BCA3	646605	7301	08/08/89	54.20	7247	230	433245	3902295
A-22-06 26BCB		7300	07/11/77	12.15	7288	0	433169	3902326
A-22-06 26BCB		7300	06/13/01	73.00	7227	0	433169	3902326
A-22-06 26BDA1	805278	7302	04/18/77	82.30	7220	250	433826	3902291
A-22-06 26BDA1	805278	7302	07/11/77	82.70	7219	250	433826	3902291
A-22-06 26BDA2	643224	7300	07/11/77	92.80	7207	200	433699	3902291
A-22-06 26BDA3		7310		80.00	7230	102	433700	3902415
A-22-06 26BDA4	807487	7310	07/21/78	65.00	7245	115	433726	3902445
A-22-06 26BDA5	807489	7310	06/26/79	54.95	7255	120	433751	3902384
A-22-06 26BDA6	807488	7310	10/20/78	87.00	7223	160	433826	3902352
A-22-06 26BDB1	608396	7300	06/26/79	54.95	7245	86	433624	3902384
A-22-06 26BDB1	608396	7300	05/22/91	68.15	7232	86	433624	3902384
A-22-06 26BDB1	608396	7300	08/08/91	66.20	7234	86	433624	3902384
A-22-06 26BDB1	608396	7300	11/12/91	75.90	7224	86	433624	3902384
A-22-06 26BDB1	608396	7300	02/13/92	76.10	7224	86	433624	3902384
A-22-06 26BDB1	608396	7300	05/13/92	64.30	7236	86	433624	3902384
A-22-06 26BDB1	608396	7300	08/18/92	63.90	7236	86	433624	3902384
A-22-06 26BDB1	608396	7300	11/11/92	65.60	7234	86	433624	3902384
A-22-06 26BDB1	608396	7300	05/11/93	58.50	7242	86	433624	3902384
A-22-06 26BDB1	608396	7300	08/18/93	61.70	7238	86	433624	3902384
A-22-06 26BDB1	608396	7300	11/18/93	63.70	7236	86	433624	3902384
A-22-06 26BDB1	608396	7300	05/18/94	67.30	7233	86	433624	3902384
A-22-06 26BDB1	608396	7300	08/17/94	76.40	7224	86	433624	3902384
A-22-06 26BDB1	608396	7300	11/15/94	78.80	7221	86	433624	3902384
A-22-06 26BDB1	608396	7300	05/15/95	60.60	7239	86	433624	3902384
A-22-06 26BDB1	608396	7300	08/17/95	62.10	7238	86	433624	3902384
A-22-06 26BDB1	608396	7300	11/14/95	65.10	7235	86	433624	3902384
A-22-06 26BDB1	608396	7300	02/13/96	76.00	7224	86	433624	3902384
A-22-06 26BDB1	608396	7300	05/16/96	80.40	7220	86	433624	3902384
A-22-06 26BDB1	608396	7300	08/15/96	81.40	7219	86	433624	3902384
A-22-06 26BDB1	608396	7300	11/14/96	82.00	7218	86	433624	3902384
A-22-06 26BDB1	608396	7300	02/05/97	82.50	7218	86	433624	3902384
A-22-06 26BDB1	608396	7300	05/13/97	77.00	7223	86	433624	3902384
A-22-06 26BDB1	608396	7300	08/14/97	78.10	7222	86	433624	3902384
A-22-06 26BDB1	608396	7300	11/12/97	71.10	7229	86	433624	3902384
A-22-06 26BDB1	608396	7300	02/12/98	81.10	7219	86	433624	3902384
A-22-06 26BDB1	608396	7300	05/14/98	64.70	7235	86	433624	3902384
A-22-06 26BDB1	608396	7300	08/12/98	63.78	7236	86	433624	3902384
A-22-06 26BDB1	608396	7300	11/19/98	65.30	7235	86	433624	3902384
A-22-06 26BDB1	608396	7300	02/08/99	68.50	7232	86	433624	3902384
A-22-06 26BDB1	608396	7300	05/12/99	75.87	7224	86	433624	3902384
A-22-06 26BDB1	608396	7300	08/13/99	76.50	7224	86	433624	3902384
A-22-06 26BDB1	608396	7300	11/11/99	77.20	7223	86	433624	3902384
A-22-06 26BDB1	608396	7300	02/09/00	80.70	7219	86	433624	3902384
A-22-06 26BDB1	608396	7300	05/10/00	79.30	7221	86	433624	3902384
-22-06 26BDB1	608396	7300	08/09/00	80.60	7219	86	433624	3902384

ADWR GWSI Water Levels
Greenfield Land Development

Cadastral Location	Reg. No.	Surf. Elev.	Measured	DTW	Water Elev.	Depth	UTM East	UTM West
A-22-06 26BDB1	608396	7300	11/16/00	82.90	7217	86	433624	3902384
A-22-06 26BDB1	608396	7300	02/15/01	82.40	7218	86	433624	3902384
A-22-06 26BDB1	608396	7300	05/14/01	67.90	7232	86	433624	3902384
A-22-06 26BDB1	608396	7300	08/16/01	80.70	7219	86	433624	3902384
A-22-06 26BDB1	608396	7300	11/14/01	81.00	7219	86	433624	3902384
A-22-06 26BDB1	608396	7300	02/11/02	82.62	7217	86	433624	3902384
A-22-06 26BDB1	608396	7300	05/13/02	84.69	7215	86	433624	3902384
A-22-06 26BDB1	608396	7300	08/14/02	85.90	7214	86	433624	3902384
A-22-06 26BDB1	608396	7300	11/14/02	85.19	7215	86	433624	3902384
A-22-06 26BDB1	608396	7300	02/10/03	85.80	7214	86	433624	3902384
A-22-06 26BDB1	608396	7300	05/15/03	85.10	7215	86	433624	3902384
A-22-06 26BDB1	608396	7300	08/14/03	86.04	7214	86	433624	3902384
A-22-06 26BDB1	608396	7300	11/21/03	81.70	7218	86	433624	3902384
A-22-06 26BDB1	608396	7300	02/17/04	85.20	7215	86	433624	3902384
A-22-06 26BDB1	608396	7300	05/13/04	84.15	7216	86	433624	3902384
A-22-06 26BDB1	608396	7300	08/18/04	87.20	7213	86	433624	3902384
A-22-06 26BDB1	608396	7300	11/17/04	81.70	7218	86	433624	3902384
A-22-06 26BDB1	608396	7300	03/09/05	66.30	7234	86	433624	3902384
A-22-06 26BDB1	608396	7300	05/18/05	60.50	7240	86	433624	3902384
A-22-06 26BDB2	608397	7300	06/25/79	8.85	7291	35	433599	3902415
A-22-06 26BDB2	608397	7300	05/22/91	12.69	7287	35	433599	3902415
A-22-06 26BDB2	608397	7300	08/08/91	14.00	7286	35	433599	3902415
A-22-06 26BDB2	608397	7300	11/12/91	15.70	7284	35	433599	3902415
A-22-06 26BDB2	608397	7300	02/13/92	15.40	7285	35	433599	3902415
A-22-06 26BDB2	608397	7300	05/13/92	12.50	7288	35	433599	3902415
A-22-06 26BDB2	608397	7300	08/18/92	13.15	7287	35	433599	3902415
A-22-06 26BDB2	608397	7300	11/11/92	13.95	7286	35	433599	3902415
A-22-06 26BDB2	608397	7300	02/10/93	11.69	7288	35	433599	3902415
A-22-06 26BDB2	608397	7300	05/11/93	4.15	7296	35	433599	3902415
A-22-06 26BDB2	608397	7300	08/18/93	12.40	7288	35	433599	3902415
A-22-06 26BDB2	608397	7300	11/18/93	15.10	7285	35	433599	3902415
A-22-06 26BDB2	608397	7300	02/16/94	17.20	7283	35	433599	3902415
A-22-06 26BDB2	608397	7300	05/18/94	16.00	7284	35	433599	3902415
A-22-06 26BDB2	608397	7300	08/17/94	17.50	7283	35	433599	3902415
A-22-06 26BDB2	608397	7300	11/15/94	18.20	7282	35	433599	3902415
A-22-06 26BDB2	608397	7300	02/13/95	18.85	7281	35	433599	3902415
A-22-06 26BDB2	608397	7300	05/15/95	10.90	7289	35	433599	3902415
A-22-06 26BDB2	608397	7300	08/17/95	13.20	7287	35	433599	3902415
A-22-06 26BDB2	608397	7300	11/14/95	15.75	7284	35	433599	3902415
A-22-06 26BDB2	608397	7300	02/13/96	17.70	7282	35	433599	3902415
A-22-06 26BDB2	608397	7300	05/16/96	19.10	7281	35	433599	3902415
A-22-06 26BDB2	608397	7300	08/15/96	19.80	7280	35	433599	3902415
A-22-06 26BDB2	608397	7300	11/14/96	20.10	7280	35	433599	3902415
A-22-06 26BDB2	608397	7300	02/05/97	20.00	7280	35	433599	3902415
A-22-06 26BDB2	608397	7300	05/13/97	15.60	7284	35	433599	3902415
A-22-06 26BDB2	608397	7300	08/14/97	17.20	7283	35	433599	3902415
A-22-06 26BDB2	608397	7300	11/12/97	18.50	7282	35	433599	3902415
A-22-06 26BDB2	608397	7300	02/12/98	19.20	7281	35	433599	3902415
A-22-06 26BDB2	608397	7300	05/14/98	13.70	7286	35	433599	3902415

ADWR GWSI Water Levels
Greenfield Land Development

Cadastral Location	Reg. No.	Surf. Elev.	Measured	DTW	Water Elev.	Depth	UTM East	UTM West
A-22-06 26BDB2	608397	7300	08/12/98	15.67	7284	35	433599	3902415
A-22-06 26BDB2	608397	7300	11/19/98	16.22	7284	35	433599	3902415
A-22-06 26BDB2	608397	7300	02/06/99	16.70	7283	35	433599	3902415
A-22-06 26BDB2	608397	7300	05/12/99	17.23	7283	35	433599	3902415
A-22-06 26BDB2	608397	7300	08/13/99	18.45	7282	35	433599	3902415
A-22-06 26BDB2	608397	7300	11/11/99	18.50	7282	35	433599	3902415
A-22-06 26BDB2	608397	7300	02/09/00	19.83	7280	35	433599	3902415
A-22-06 26BDB2	608397	7300	05/10/00	18.02	7282	35	433599	3902415
A-22-06 26BDB2	608397	7300	08/09/00	19.53	7280	35	433599	3902415
A-22-06 26BDB2	608397	7300	11/16/00	23.52	7276	35	433599	3902415
A-22-06 26BDB2	608397	7300	02/15/01	21.65	7278	35	433599	3902415
A-22-06 26BDB2	608397	7300	05/14/01	21.10	7279	35	433599	3902415
A-22-06 26BDB2	608397	7300	08/16/01	21.45	7279	35	433599	3902415
A-22-06 26BDB2	608397	7300	11/14/01	22.10	7278	35	433599	3902415
A-22-06 26BDB2	608397	7300	02/11/02	22.61	7277	35	433599	3902415
A-22-06 26BDB2	608397	7300	05/13/02	23.00	7277	35	433599	3902415
A-22-06 26BDB2	608397	7300	08/14/02	23.29	7277	35	433599	3902415
A-22-06 26BDB2	608397	7300	11/14/02	23.45	7277	35	433599	3902415
A-22-06 26BDB2	608397	7300	02/10/03	23.35	7277	35	433599	3902415
A-22-06 26BDB2	608397	7300	05/15/03	22.40	7278	35	433599	3902415
A-22-06 26BDB2	608397	7300	08/14/03	23.09	7277	35	433599	3902415
A-22-06 26BDB2	608397	7300	11/21/03	21.60	7278	35	433599	3902415
A-22-06 26BDB2	608397	7300	02/18/04	22.30	7278	35	433599	3902415
A-22-06 26BDB2	608397	7300	05/13/04	22.30	7278	35	433599	3902415
A-22-06 26BDB2	608397	7300	08/18/04	22.60	7277	35	433599	3902415
A-22-06 26BDB2	608397	7300	11/17/04	22.80	7277	35	433599	3902415
A-22-06 26BDB2	608397	7300	03/09/05	10.80	7289	35	433599	3902415
A-22-06 26BDB2	608397	7300	05/18/05	10.60	7289	35	433599	3902415
A-22-06 26BDC1		7305	01/01/71	15.00	7290	35	433572	3902200
A-22-06 26BDC2		7305	07/11/77	11.50	7294	0	433522	3902200
A-22-06 26BDC3		7305	07/11/77	87.80	7217	200	433446	3902170
A-22-06 26BDC4		7301	08/08/89	75.70	7225	180	433470	3902047
A-22-06 26BDC4		7301	06/13/01	80.20	7221	180	433470	3902047
A-22-06 26BDD		7302	08/08/89	76.20	7226	0	433824	3902075
A-22-06 26BDD		7302	06/13/01	75.90	7226	0	433824	3902075
A-22-06 26CAB	514115	7302	02/23/88	1.20	7301	12	433596	3901984
A-22-06 26CAB	514115	7302	08/08/89	3.45	7299	12	433596	3901984
A-22-06 26CAD		7314	02/23/88	84.70	7229	0	433796	3901644
A-22-06 26CAD		7314	08/07/89	85.60	7228	0	433796	3901644
A-22-06 26CBC1		7302	02/23/88	0.00	0	0	433265	3901617
A-22-06 26CBC1		7302	08/08/89	185.20	7117	0	433265	3901617
A-22-06 26CBC1		7302	06/14/01	186.90	7115	0	433265	3901617
A-22-06 26CBC2	515228	7306	02/23/88	187.10	7119	280	433113	3901649
A-22-06 26CBC2	515228	7306	08/07/89	237.30	7069	280	433113	3901649
A-22-06 26CBC2	515228	7306	08/08/89	156.80	7149	280	433113	3901649
A-22-06 26CCA1	647302	7305	02/23/88	147.80	7157	210	433365	3901555
A-22-06 26CCA1	647302	7305	08/08/89	148.40	7157	210	433365	3901555
A-22-06 26CCA2	512244	7305	10/17/85	0.00	0	302	433290	3901555
-22-06 26CCA3	513384	7319	02/23/88	64.30	7255	142	433263	3901432

ADWR GWSI Water Levels
Greenfield Land Development

Cadastral Location	Reg. No.	Surf. Elev.	Measured	DTW	Water Elev.	Depth	UTM East	UTM West
A-22-06 26CCB1	650780	7310	04/18/77	25.68	7284	40	433062	3901526
A-22-06 26CCB1	650780	7310	08/07/89	20.70	7289	40	433062	3901526
A-22-06 26CCB1	650780	7310	06/13/01	4.56	7305	40	433062	3901526
A-22-06 26CCB2		7306	04/18/77	28.25	7278	40	433087	3901495
A-22-06 26CCB2		7306	02/23/88	8.10	7298	40	433087	3901495
A-22-06 26CCB2		7306	08/07/89	0.00	0	40	433087	3901495
A-22-06 26CCB2		7306	06/13/01	4.70	7301	40	433087	3901495
A-22-06 26CDA	502971	7315	02/23/88	94.50	7221	303	433719	3901583
A-22-06 26CDA	502971	7315	08/07/89	95.00	7220	303	433719	3901583
A-22-06 26CDA	502971	7315	06/14/01	104.20	7211	303	433719	3901583
A-22-06 26DAA		7300	03/06/67	56.80	7243	227	434606	3901854
A-22-06 26DCA2		7302	08/07/89	18.20	7284	0	434123	3901549
A-22-06 26DCB2		7310	02/23/88	96.20	7214	0	433871	3901582
A-22-06 26DCB2		7310	08/08/89	95.60	7214	0	433871	3901582
A-22-06 26DCB3	500347	7315	02/23/88	117.10	7198	260	433871	3901520
A-22-06 26DCB3	500347	7315	08/08/89	118.00	7197	260	433871	3901520
A-22-06 26DCB4	510113	7340	02/23/88	145.20	7195	220	433870	3901458
A-22-06 26DCB4	510113	7340	08/08/89	145.30	7195	220	433870	3901458
A-22-06 26DCB5	800078	7312	08/08/89	101.50	7211	135	433947	3901581
A-22-06 26DDA		7322	02/23/88	126.00	7196	0	434477	3901577
A-22-06 26DDA		7322	08/07/89	125.80	7196	0	434477	3901577
A-22-06 26DDB1	507402	7322	02/23/88	108.80	7213	150	434351	3901517
A-22-06 26DDB1	507402	7322	08/07/89	108.10	7214	150	434351	3901517
A-22-06 26DDB2		7325	02/23/88	121.10	7204	0	434402	3901578
A-22-06 26DDB3	506360	7338	08/07/89	108.00	7230	150	434275	3901486
A-22-06 26DDB4		7345	02/23/88	0.00	0	47	434350	3901455
A-22-06 26DDC1	509631	7350	02/23/88	123.10	7227	175	434451	3901393
A-22-06 26DDC1	509631	7350	08/07/89	126.10	7224	175	434451	3901393
A-22-06 26DDC2		7350	02/23/88	124.70	7225	0	434274	3901455
A-22-06 26DDC2		7350	08/07/89	124.50	7226	0	434274	3901455
A-22-06 26DDC2		7350	05/22/91	124.20	7226	0	434274	3901455
A-22-06 26DDC2		7350	08/08/91	124.50	7226	0	434274	3901455
A-22-06 26DDC2		7350	11/12/91	124.70	7225	0	434274	3901455
A-22-06 26DDC2		7350	02/14/92	124.30	7226	0	434274	3901455
A-22-06 26DDC2		7350	05/13/92	124.30	7226	0	434274	3901455
A-22-06 26DDC2		7350	08/18/92	124.20	7226	0	434274	3901455
A-22-06 26DDC2		7350	11/11/92	124.10	7226	0	434274	3901455
A-22-06 26DDC2		7350	05/11/93	123.00	7227	0	434274	3901455
A-22-06 26DDC2		7350	08/18/93	123.70	7226	0	434274	3901455
A-22-06 26DDC2		7350	11/18/93	123.80	7226	0	434274	3901455
A-22-06 26DDC2		7350	02/16/94	123.60	7226	0	434274	3901455
A-22-06 26DDC2		7350	05/18/94	123.70	7226	0	434274	3901455
A-22-06 26DDC2		7350	08/17/94	123.60	7226	0	434274	3901455
A-22-06 26DDC2		7350	11/14/94	123.80	7226	0	434274	3901455
A-22-06 26DDC2		7350	02/13/95	122.60	7227	0	434274	3901455
A-22-06 26DDC2		7350	05/15/95	123.30	7227	0	434274	3901455
A-22-06 26DDC2		7350	08/17/95	123.10	7227	0	434274	3901455
A-22-06 26DDC2		7350	11/14/95	123.60	7226	0	434274	3901455
A-22-06 26DDC2		7350	02/13/96	123.80	7226	0	434274	3901455

ADWR GWSI Water Levels
Greenfield Land Development

Cadastral Location	Reg. No.	Surf. Elev.	Measured	DTW	Water Elev.	Depth	UTM East	UTM West
A-22-06 26DDC2		7350	05/16/96	123.70	7226	0	434274	3901455
A-22-06 26DDC2		7350	08/15/96	123.90	7226	0	434274	3901455
A-22-06 26DDC2		7350	11/14/96	125.30	7225	0	434274	3901455
A-22-06 26DDC2		7350	05/13/97	123.90	7226	0	434274	3901455
A-22-06 26DDC2		7350	08/14/97	124.10	7226	0	434274	3901455
A-22-06 26DDC2		7350	11/12/97	124.10	7226	0	434274	3901455
A-22-06 26DDC2		7350	02/12/98	124.15	7226	0	434274	3901455
A-22-06 26DDC2		7350	05/14/98	124.50	7226	0	434274	3901455
A-22-06 26DDC2		7350	08/12/98	122.85	7227	0	434274	3901455
A-22-06 26DDC2		7350	11/19/98	122.90	7227	0	434274	3901455
A-22-06 26DDC2		7350	02/08/99	122.76	7227	0	434274	3901455
A-22-06 26DDC2		7350	05/12/99	124.39	7226	0	434274	3901455
A-22-06 26DDC2		7350	08/13/99	122.80	7227	0	434274	3901455
A-22-06 26DDC2		7350	11/11/99	122.70	7227	0	434274	3901455
A-22-06 26DDC2		7350	02/09/00	122.50	7228	0	434274	3901455
A-22-06 26DDC2		7350	05/10/00	122.60	7227	0	434274	3901455
A-22-06 26DDC2		7350	08/09/00	122.70	7227	0	434274	3901455
A-22-06 26DDC2		7350	11/16/00	124.70	7225	0	434274	3901455
A-22-06 26DDC2		7350	02/15/01	122.55	7227	0	434274	3901455
A-22-06 26DDC2		7350	05/14/01	122.70	7227	0	434274	3901455
A-22-06 26DDC2		7350	08/16/01	123.10	7227	0	434274	3901455
A-22-06 26DDC2		7350	11/14/01	123.05	7227	0	434274	3901455
A-22-06 26DDC2		7350	02/11/02	123.10	7227	0	434274	3901455
A-22-06 26DDC2		7350	05/13/02	123.10	7227	0	434274	3901455
A-22-06 26DDC2		7350	08/14/02	123.15	7227	0	434274	3901455
A-22-06 26DDC2		7350	11/14/02	123.09	7227	0	434274	3901455
A-22-06 26DDC2		7350	02/10/03	123.00	7227	0	434274	3901455
A-22-06 26DDC2		7350	05/15/03	124.65	7225	0	434274	3901455
A-22-06 26DDC2		7350	08/14/03	123.10	7227	0	434274	3901455
A-22-06 26DDC2		7350	11/21/03	123.00	7227	0	434274	3901455
A-22-06 26DDC2		7350	02/17/04	123.10	7227	0	434274	3901455
A-22-06 26DDC2		7350	05/13/04	123.30	7227	0	434274	3901455
A-22-06 26DDC2		7350	08/18/04	123.20	7227	0	434274	3901455
A-22-06 26DDC2		7350	11/17/04	123.20	7227	0	434274	3901455
A-22-06 26DDC2		7350	03/09/05	122.30	7228	0	434274	3901455
A-22-06 26DDC2		7350	05/18/05	125.50	7225	0	434274	3901455
A-22-06 26DDD1	601303	7360	08/07/89	184.90	7175	325	434627	3901237
A-22-06 26DDD1	601303	7360	06/07/01	185.60	7174	325	434627	3901237
A-22-06 26DDD2	506359	7345	08/07/89	98.80	7246	126	434678	3901299
A-22-06 26DDD2	506359	7345	06/07/01	89.90	7255	126	434678	3901299
A-22-06 26DDD3	515112	7350	02/23/88	135.90	7214	150	434551	3901299
A-22-06 26DDD3	515112	7350	08/07/89	135.80	7214	150	434551	3901299
A-22-06 27ACC	582863	7330	06/13/01	66.80	7263	130	432334	3902148
A-22-06 27ACD		7315	06/13/01	58.00	7257	0	432586	3902146
A-22-06 27ADA1	534970	7310	10/24/67	26.30	7284	66	433018	3902389
A-22-06 27ADA1	534970	7310	04/18/77	57.50	7253	66	433018	3902389
A-22-06 27ADA1	534970	7310	07/05/77	58.82	7251	66	433018	3902389
A-22-06 27ADA1	534970	7310	02/08/78	61.95	7248	66	433018	3902389
22-06 27ADA1	534970	7310	02/14/79	23.50	7287	66	433018	3902389

ADWR GWSI Water Levels
Greenfield Land Development

Cadastral Location	Reg. No.	Surf. Elev.	Measured	DTW	Water Elev.	Depth	UTM East	UTM West
A-22-06 27ADA1	534970	7310	01/09/80	44.60	7265	66	433018	3902389
A-22-06 27ADA1	534970	7310	01/09/81	44.00	7266	66	433018	3902389
A-22-06 27ADA1	534970	7310	04/08/82	27.97	7282	66	433018	3902389
A-22-06 27ADA1	534970	7310	04/21/83	23.60	7286	66	433018	3902389
A-22-06 27ADA1	534970	7310	03/16/84	27.00	7283	66	433018	3902389
A-22-06 27ADA1	534970	7310	04/30/85	23.60	7286	66	433018	3902389
A-22-06 27ADA1	534970	7310	05/13/85	23.50	7287	66	433018	3902389
A-22-06 27ADA1	534970	7310	04/18/86	24.20	7286	66	433018	3902389
A-22-06 27ADA1	534970	7310	04/01/87	39.40	7271	66	433018	3902389
A-22-06 27ADA1	534970	7310	01/09/88	39.40	7271	66	433018	3902389
A-22-06 27ADA1	534970	7310	02/22/88	39.80	7270	66	433018	3902389
A-22-06 27ADA1	534970	7310	03/15/89	46.50	7264	66	433018	3902389
A-22-06 27ADA1	534970	7310	08/07/89	53.20	7257	66	433018	3902389
A-22-06 27ADA1	534970	7310	11/08/90	50.40	7260	66	433018	3902389
A-22-06 27ADA2	630287	7308	04/18/77	11.36	7297	22	432992	3902297
A-22-06 27ADA2	630287	7308	07/05/77	11.61	7296	22	432992	3902297
A-22-06 27ADA2	630287	7308	02/22/88	4.91	7303	22	432992	3902297
A-22-06 27ADA2	630287	7308	08/07/89	7.90	7300	22	432992	3902297
A-22-06 27ADB		7315	07/05/77	70.15	7245	125	432840	3902329
A-22-06 27ADB		7315	02/22/88	56.00	7259	125	432840	3902329
A-22-06 27ADB		7315	08/07/89	58.50	7257	125	432840	3902329
A-22-06 27ADD		7310	06/13/01	64.90	7245	0	432965	3902081
A-22-06 27CCB	507596	7340	02/23/88	40.98	7299	100	431444	3901477
A-22-06 27CCC		7330	04/13/04	27.87	7302	0	431620	3901290
A-22-06 27CCC1		7334	02/23/88	116.50	7218	0	431469	3901384
A-22-06 27CCC1		7334	08/07/89	118.60	7215	0	431469	3901384
A-22-06 27CCC1		7334	10/29/93	110.40	7224	0	431469	3901384
A-22-06 27CCC1		7334	11/18/93	112.70	7221	0	431469	3901384
A-22-06 27CCC1		7334	02/16/94	115.30	7219	0	431469	3901384
A-22-06 27CCC1		7334	05/18/94	114.80	7219	0	431469	3901384
A-22-06 27CCC1		7334	08/17/94	116.55	7217	0	431469	3901384
A-22-06 27CCC1		7334	11/14/94	118.15	7216	0	431469	3901384
A-22-06 27CCC1		7334	02/13/95	117.15	7217	0	431469	3901384
A-22-06 27CCC1		7334	05/15/95	109.10	7225	0	431469	3901384
A-22-06 27CCC1		7334	08/17/95	108.00	7226	0	431469	3901384
A-22-06 27CCC2	084999	7334	10/29/93	119.80	7214	130	431494	3901384
A-22-06 27CCC3	507596	7334	02/22/88	97.00	7237	100	431823	3901474
A-22-06 27CCC4	507657	7330	08/08/89	17.80	7312	100	431444	3901384
A-22-06 27CCC4	507657	7330	10/29/93	17.50	7313	100	431444	3901384
A-22-06 27CCC4	507657	7330	04/13/04	0.00	0	100	431444	3901384
A-22-06 27CCC5	523155	7330	08/08/89	21.80	7308	100	431519	3901322
A-22-06 27CCC5	523155	7330	10/29/93	17.30	7313	100	431519	3901322
A-22-06 27CCC5	523155	7330	06/11/01	17.80	7312	100	431519	3901322
A-22-06 27CCC5	523155	7330	04/13/04	23.60	7306	100	431519	3901322
A-22-06 27CCD	514901	7330	02/22/88	23.40	7307	102	431746	3901320
A-22-06 27CCD	514901	7330	08/08/89	27.10	7303	102	431746	3901320
A-22-06 27CCD	514901	7330	06/14/01	29.14	7301	102	431746	3901320
A-22-06 27CCD	514901	7330	04/13/04	39.22	7291	102	431746	3901320
22-06 27CDB1		7340	06/01/67	81.00	7259	147	431848	3901443

ADWR GWSI Water Levels
Greenfield Land Development

Cadastral Location	Reg. No.	Surf. Elev.	Measured	DTW	Water Elev.	Depth	UTM East	UTM West
A-22-06 27CDB2		7328	06/20/79	100.70	7227	116	431874	3901442
A-22-06 27CDB3		7325	06/20/79	180.80	7144	210	431900	3901535
A-22-06 27CDB4	623343	7324	02/22/88	71.30	7253	240	431975	3901442
A-22-06 27CDB4	623343	7324	08/08/89	71.70	7252	240	431975	3901442
A-22-06 27CDB4	623343	7324	06/11/01	62.10	7262	240	431975	3901442
A-22-06 27CDC4	641822	7323	02/23/88	161.30	7162	190	431848	3901350
A-22-06 27CDC4	641822	7323	08/08/89	173.00	7150	190	431848	3901350
A-22-06 27CDD		7315	06/21/79	117.30	7198	138	432201	3901348
A-22-06 27DAB1		7315	06/13/01	20.50	7295	0	432736	3901898
A-22-06 27DAB2	550710	7310	06/13/01	85.60	7224	200	432761	3901836
A-22-06 27DBC1	800701	7319	06/21/79	50.95	7268	0	432355	3901655
A-22-06 27DBC1	800701	7319	02/22/88	59.70	7259	0	432355	3901655
A-22-06 27DBC2	501605	7322	02/22/88	58.30	7264	165	432305	3901747
A-22-06 27DBC2	501605	7322	08/07/89	62.30	7260	165	432305	3901747
A-22-06 27DCA		7307	02/22/88	112.48	7195	0	433289	3901494
A-22-06 27DCA		7307	08/07/89	194.40	7113	0	433289	3901494
A-22-06 27DCB1	644444	7315	02/23/88	14.70	7300	95	432354	3901500
A-22-06 27DCB2	647022	7318	04/18/77	52.70	7265	60	432329	3901501
A-22-06 27DCB2	647022	7318	02/23/88	43.30	7275	60	432329	3901501
A-22-06 27DCB2	647022	7318	08/07/89	50.10	7268	60	432329	3901501
A-22-06 27DCB2	647022	7318	05/22/91	46.05	7272	60	432329	3901501
A-22-06 27DCB2	647022	7318	08/08/91	47.90	7270	60	432329	3901501
A-22-06 27DCB2	647022	7318	11/12/91	46.50	7272	60	432329	3901501
A-22-06 27DCB2	647022	7318	02/14/92	49.00	7269	60	432329	3901501
A-22-06 27DCB2	647022	7318	05/13/92	45.00	7273	60	432329	3901501
A-22-06 27DCB2	647022	7318	08/18/92	44.90	7273	60	432329	3901501
A-22-06 27DCB2	647022	7318	11/11/92	48.00	7270	60	432329	3901501
A-22-06 27DCB2	647022	7318	05/11/93	40.50	7278	60	432329	3901501
A-22-06 27DCB2	647022	7318	08/18/93	45.70	7272	60	432329	3901501
A-22-06 27DCB2	647022	7318	11/18/93	58.20	7260	60	432329	3901501
A-22-06 27DCB2	647022	7318	02/16/94	48.90	7269	60	432329	3901501
A-22-06 27DCB2	647022	7318	05/18/94	47.70	7270	60	432329	3901501
A-22-06 27DCB2	647022	7318	08/17/94	49.50	7269	60	432329	3901501
A-22-06 27DCB2	647022	7318	11/15/94	50.30	7268	60	432329	3901501
A-22-06 27DCB2	647022	7318	05/15/95	42.50	7276	60	432329	3901501
A-22-06 27DCB2	647022	7318	08/17/95	46.30	7272	60	432329	3901501
A-22-06 27DCB2	647022	7318	11/14/95	48.80	7269	60	432329	3901501
A-22-06 27DCB2	647022	7318	02/13/96	50.20	7268	60	432329	3901501
A-22-06 27DCB2	647022	7318	05/16/96	50.80	7267	60	432329	3901501
A-22-06 27DCB2	647022	7318	08/15/96	51.50	7267	60	432329	3901501
A-22-06 27DCB2	647022	7318	11/14/96	53.70	7264	60	432329	3901501
A-22-06 27DCB2	647022	7318	05/13/97	49.80	7268	60	432329	3901501
A-22-06 27DCB2	647022	7318	08/14/97	49.85	7268	60	432329	3901501
A-22-06 27DCB2	647022	7318	08/14/97	203.80	7114	60	432329	3901501
A-22-06 27DCB2	647022	7318	02/12/98	50.70	7267	60	432329	3901501
A-22-06 27DCB2	647022	7318	05/14/98	44.40	7274	60	432329	3901501
A-22-06 27DCB2	647022	7318	08/12/98	46.73	7271	60	432329	3901501
A-22-06 27DCB2	647022	7318	11/19/98	47.96	7270	60	432329	3901501
-22-06 27DCB2	647022	7318	02/08/99	49.22	7269	60	432329	3901501

ADWR GWSI Water Levels
Greenfield Land Development

Cadastral Location	Reg. No.	Surf. Elev.	Measured	DTW	Water Elev.	Depth	UTM East	UTM West
A-22-06 27DCB2	647022	7318	05/12/99	47.59	7270	60	432329	3901501
A-22-06 27DCB2	647022	7318	08/13/99	47.70	7270	60	432329	3901501
A-22-06 27DCB2	647022	7318	11/11/99	49.80	7268	60	432329	3901501
A-22-06 27DCB2	647022	7318	02/09/00	53.10	7265	60	432329	3901501
A-22-06 27DCB2	647022	7318	05/10/00	48.50	7270	60	432329	3901501
A-22-06 27DCB2	647022	7318	08/09/00	50.50	7268	60	432329	3901501
A-22-06 27DCB2	647022	7318	11/16/00	51.20	7267	60	432329	3901501
A-22-06 27DCB2	647022	7318	02/15/01	51.75	7266	60	432329	3901501
A-22-06 27DCB2	647022	7318	05/14/01	48.90	7269	60	432329	3901501
A-22-06 27DCB2	647022	7318	08/16/01	50.05	7268	60	432329	3901501
A-22-06 27DCB2	647022	7318	11/14/01	51.95	7266	60	432329	3901501
A-22-06 27DCB2	647022	7318	02/11/02	52.98	7265	60	432329	3901501
A-22-06 27DCB2	647022	7318	05/13/02	53.50	7265	60	432329	3901501
A-22-06 27DCB2	647022	7318	08/14/02	54.40	7264	60	432329	3901501
A-22-06 27DCB2	647022	7318	11/14/02	54.45	7264	60	432329	3901501
A-22-06 27DCB2	647022	7318	02/10/03	55.09	7263	60	432329	3901501
A-22-06 27DCB2	647022	7318	05/15/03	53.34	7265	60	432329	3901501
A-22-06 27DCB2	647022	7318	08/14/03	53.82	7264	60	432329	3901501
A-22-06 27DCB2	647022	7318	11/21/03	52.10	7266	60	432329	3901501
A-22-06 27DCB2	647022	7318	02/17/04	53.50	7265	60	432329	3901501
A-22-06 27DCB2	647022	7318	05/13/04	50.50	7268	60	432329	3901501
A-22-06 27DCB2	647022	7318	08/18/04	55.25	7263	60	432329	3901501
A-22-06 27DCB2	647022	7318	11/17/04	54.10	7264	60	432329	3901501
A-22-06 27DCB2	647022	7318	03/09/05	43.00	7275	60	432329	3901501
A-22-06 27DCB2	647022	7318	05/18/05	40.00	7278	60	432329	3901501
A-22-06 27DCB3		7315	06/21/79	109.20	7206	243	432379	3901469
A-22-06 27DCC2		7315	02/22/88	53.50	7262	80	432328	3901377
A-22-06 27DDA1		7307	06/19/79	10.00	7297	40	433011	3901526
A-22-06 27DDA2		7307	02/23/88	3.20	7304	0	433011	3901465
A-22-06 27DDA2		7307	08/07/89	12.50	7295	0	433011	3901465
A-22-06 27DDA2		7307	06/13/01	4.72	7302	0	433011	3901465
A-22-06 27DDA3	508464	7308	02/23/88	47.50	7261	100	432859	3901435
A-22-06 36DAA		7285	06/10/68	228.00	7057	246	436212	3900333
A-22-06 36DAA		7285	08/07/89	61.30	7258	246	436212	3900333

ADWR 55-Files
Grenfield Land Development

Reg. No.	Town	North	Range	East	Sect.	Ac 160	Ac 40	Ac 10	Depth	DTW	Dia.	Log	Drilled	Rate	UTMX	UTMY	Well Use	Last Name	Company
522339	21.0	N	5.0	E	1	NE	SW	NW	225	159	6	X	09/29/88	0	425825.900	3899030.200	WATER PRODUCTION	ACGT,	
509305	21.0	N	5.0	E	1	NE	SW	SW	0	0	0			0	425827.000	3898825.800	WATER PRODUCTION	CROCKATT,C G	
513656	21.0	N	5.0	E	1	NE	SW	SW	100	42	6	X	04/04/86	15	425827.000	3898825.800	WATER PRODUCTION		ARIZONA NORTH PROPERTIES
513994	21.0	N	5.0	E	1	NE	SW	SW	220	137	0	X	05/14/86	0	425827.000	3898825.800	WATER PRODUCTION	CROCKATT	
575889	21.0	N	5.0	E	1	NE	SW	SW	0	0	0			0	425827.000	3898825.800	WATER PRODUCTION	CROCKATT	
202863	21.0	N	5.0	E	1	NE	SW	SW	0	0	0			0	425827.000	3898825.800	WATER PRODUCTION		ARIZONA NORTH PROPERTIES
592553	21.0	N	5.0	E	1	SW	NW	SW	0	0	0			0	425020.900	3898411.800	MONITOR		ARIZONA ARMY NATIONAL GUA
541300	21.0	N	5.0	E	1	SW	NW	SE	0	0	0			0	425223.000	3898413.100	MONITOR	DEPT OF DEFENSE,	
541301	21.0	N	5.0	E	1	SW	NW	SE	0	0	0			0	425223.000	3898413.100	MONITOR	DEPT OF DEFENSE,	
541304	21.0	N	5.0	E	1	SW	NW	SE	0	0	0			0	425223.000	3898413.100	MONITOR	DEPT OF DEFENSE,	
541305	21.0	N	5.0	E	1	SW	NW	SE	0	0	0			0	425223.000	3898413.100	MONITOR	DEPT OF DEFENSE,	
541306	21.0	N	5.0	E	1	SE	NW	SE	0	0	0			0	426031.100	3898418.600	MONITOR	DEPT OF DEFENSE,	
541307	21.0	N	5.0	E	1	SE	NW	SE	0	0	0			0	426031.100	3898418.600	MONITOR	DEPT OF DEFENSE,	
541308	21.0	N	5.0	E	1	SE	NW	SE	0	0	0			0	426031.100	3898418.600	MONITOR	DEPT OF DEFENSE,	
541309	21.0	N	5.0	E	1	SE	NW	SE	0	0	0			0	426031.100	3898418.600	MONITOR	DEPT OF DEFENSE,	
541310	21.0	N	5.0	E	1	SE	NW	SE	0	0	0			0	426031.100	3898418.600	MONITOR	DEPT OF DEFENSE,	
541311	21.0	N	5.0	E	1	SE	NW	SE	0	0	0			0	426031.100	3898418.600	MONITOR	DEPT OF DEFENSE,	
541312	21.0	N	5.0	E	1	SE	NW	SE	0	0	0			0	426031.100	3898418.600	MONITOR	DEPT OF DEFENSE,	
575890	21.0	N	5.0	E	1	SE	SW	SW	0	0	0			0	425831.300	3898008.600	WATER PRODUCTION	CROCKATT	
593104	21.0	N	5.0	E	2				0	0	0			0	424123.700	3898731.300	GEOTECHNICAL		ARIZONA ARMY NATIONAL GUA
627254	21.0	N	5.0	E	2	NE	NW	SW	110	0	0		08/12/29	0	424213.300	3899237.700	WATER PRODUCTION	ATCHISON-TOPEKA,	
525930	21.0	N	5.0	E	2	NE	NW	SE	240	0	12	X	10/31/89	0	424414.100	3899236.300	WATER PRODUCTION	BELLEMONT WATER CO,	
549875	21.0	N	5.0	E	2	NE	SW	SW	49	36	4	X	10/21/95	0	424215.600	3898830.500	MONITOR	ARIZONA ARMY NATL,	
557462	21.0	N	5.0	E	2	NE	SW	SW	145	130	2	X	05/18/96	0	424215.600	3898830.500	MONITOR		ARIZONA NATIONAL GUARD
557461	21.0	N	5.0	E	2	NE	SW	SW	350	25	4	X	05/21/96	0	424215.600	3898830.500	MONITOR		ARIZONA NATIONAL GUARD
557463	21.0	N	5.0	E	2	NE	SW	SW	45	30	2	X	05/21/96	0	424215.600	3898830.500	MONITOR		ARIZONA NATIONAL GUARD
627253	21.0	N	5.0	E	2	NW	NE	SE	122	0	12		11/07/26	0	424012.400	3899239.000	WATER PRODUCTION	ATCHISON-TOPEKA,	
557464	21.0	N	5.0	E	2	NW	NW	NW	52	49	2	X	05/19/96	0	423409.300	3899445.100	MONITOR		ARIZONA NATIONAL GUARD
541297	21.0	N	5.0	E	2	NW	NW	SE	0	0	0			0	423610.700	3899241.700	MONITOR	DEPT OF DEFENSE,	
541298	21.0	N	5.0	E	2	NW	NW	SE	0	0	0			0	423610.700	3899241.700	MONITOR	DEPT OF DEFENSE,	
541303	21.0	N	5.0	E	2	NW	NW	SE	0	0	0			0	423610.700	3899241.700	MONITOR	DEPT OF DEFENSE,	
541299	21.0	N	5.0	E	2	NW	NW	SE	0	0	0			0	423610.700	3899241.700	MONITOR	DEPT OF DEFENSE,	
541302	21.0	N	5.0	E	2	NW	NW	SE	0	0	0			0	423610.700	3899241.700	MONITOR	DEPT OF DEFENSE,	
549874	21.0	N	5.0	E	2	NW	SE	NE	50	43	4	X	10/20/95	0	424013.700	3899035.900	MONITOR	AZ ARMY NATL GUARD,	
549876	21.0	N	5.0	E	2	NW	SE	SE	78	43	4	X	10/21/95	0	424015.000	3898832.900	MONITOR	ARIZONA ARMY NATL,	
553811	21.0	N	5.0	E	2	SW	NW	NE	0	0	0			0	423615.400	3898635.700	GEOTECHNICAL	ARIZONA ARMY NATL,	
549871	21.0	N	5.0	E	2	SW	SE	SW	370	0	0	X	05/16/96	0	423820.200	3898025.100	MONITOR	ARIZONA ARMY NATL,	
806551	21.0	N	5.0	E	2	SE	NE	NW	0	0	0			0	424617.700	3898621.000	WATER PRODUCTION	NAVAJO DEPOT ACTIV,	
530019	21.0	N	5.0	E	10	NE	NE	NW	0	0	0			0	423020.800	3897867.800	MONITOR		ARIZONA NATIONAL GUARD
530020	21.0	N	5.0	E	10	NE	NE	NW	0	0	0			0	423020.800	3897867.800	MONITOR	DEPT OF ARMY,	
563028	21.0	N	5.0	E	10	NE	NE	NW	22	18	4	X	09/22/97	0	423020.800	3897867.800	MONITOR	AZ ARMY NTL GUARD,	
592554	21.0	N	5.0	E	10	NE	NE	NW	25	16	5	X	06/13/02	0	423020.800	3897867.800	MONITOR		
530017	21.0	N	5.0	E	10	NE	NE	SW	26	6	2	X	11/08/90	0	423019.900	3897649.200	ABANDONED		ARIZONA ARMY NATIONAL GUA
563017	21.0	N	5.0	E	10	NE	NE	SW	21	15	4	X	09/23/97	0	423019.900	3897649.200	MONITOR		ARIZONA NATIONAL GUARD
563029	21.0	N	5.0	E	10	NE	NE	SW	15	12	4	X	09/22/97	0	423019.900	3897649.200	MONITOR	AZ ARMY NTL GUARD,	
																		AZ ARMY NTL GUARD,	

ADWR 55-Files
Grenfield Land Development

Reg. No.	Town	North	Range	East	Sect.	Ac 160	Ac 40	Ac 10	Depth	DTW	Dia.	Log	Drilled	Rate	UTMX	UTMY	Well Use	Last Name	Company
530016	21.0	N	5.0	E	10	NE	NE	SW	26	0	2	X	11/08/90	0	423019.900	3897649.200	MONITOR		ARIZONA NATIONAL GUARD
592556	21.0	N	5.0	E	10	NE	NE	SW	18	16	5	X	06/14/02	0	423019.900	3897649.200	MONITOR		ARIZONA ARMY NATIONAL GUA
530021	21.0	N	5.0	E	10	NE	NE	SE	0	0	0			0	423219.700	3897636.400	MONITOR	DEPT OF ARMY,	
563018	21.0	N	5.0	E	10	NE	NE	SE	24	18	4	X	09/23/97	0	423219.700	3897636.400	MONITOR	AZ ARMY NATL GUARD,	
563016	21.0	N	5.0	E	10	NE	NE	SE	24	22	4	X	09/23/97	0	423219.700	3897636.400	MONITOR	AZ ARMY NATL GUARD,	
577357	21.0	N	5.0	E	10	NE	NE	SE	0	0	0			0	423219.700	3897636.400	GEOTECHNICAL		
592555	21.0	N	5.0	E	10	NE	NE	SE	18	16	5	X	06/07/02	0	423219.700	3897636.400	MONITOR		ARIZONA ARMY NATIONAL GUA
530010	21.0	N	5.0	E	10	NE	NW	NE	33	17	2	X	11/10/90	0	422821.700	3897890.200	MONITOR		ARIZONA ARMY NATIONAL GUA
530013	21.0	N	5.0	E	10	NE	NW	NE	29	9	2	X	11/08/90	0	422821.700	3897890.200	ABANDONED		ARIZONA NATIONAL GUARD
530012	21.0	N	5.0	E	10	NE	NW	SE	27	8	2	X	11/09/90	0	422820.200	3897661.900	ABANDONED		ARIZONA NATIONAL GUARD
530014	21.0	N	5.0	E	10	NE	NW	SE	48	10	2	X	11/06/90	0	422820.200	3897661.900	ABANDONED		ARIZONA NATIONAL GUARD
530015	21.0	N	5.0	E	10	NE	NW	SE	60	8	2	X	11/07/90	0	422820.200	3897661.900	ABANDONED		ARIZONA NATIONAL GUARD
400062	21.0	N	5.0	E	10	NE	SW	NE	0	0	0			0	422817.900	3897452.100	ABANDONED		ARIZONA NATIONAL GUARD
563027	21.0	N	5.0	E	10	NE	SE	NE	0	0	0			0	423218.000	3897431.300	ABANDONED		ARIZONA NATIONAL GUARD
544383	21.0	N	5.0	E	10	NE	SE	NE	113	108	4	X	07/04/94	0	423218.000	3897431.300	ABANDONED		ARIZONA NATIONAL GURAD
583550	21.0	N	5.0	E	10	NE	SE	NE	30	27	2	X	10/24/00	0	423218.000	3897431.300	MONITOR		ARIZONA ARMY NATIONAL GUA
530018	21.0	N	5.0	E	10	NE	SE	SW	50	41	2	X	11/11/90	0	423016.300	3897234.000	ABANDONED		ARIZONA NATIONAL GUARD
530011	21.0	N	5.0	E	10	NE	SE	SE	29	10	2	X	11/09/90	0	423216.400	3897226.000	ABANDONED		ARIZONA NATIONAL GUARD
400063	21.0	N	5.0	E	10	SE	NW	NE	0	0	0			0	422813.300	3897032.100	ABANDONED		ARIZONA NATIONAL GUARD
593103	21.0	N	5.0	E	11				0	0	0			0	424114.400	3897111.600	GEOTECHNICAL		ARIZONA ARMY NATIONAL GUA
594719	21.0	N	5.0	E	11	NE	NW	NE	2084	1583	10	X	04/15/03	0	424421.700	3897809.400	WATER PRODUCTION		ARIZONA ARMY NATIONAL GUA
549873	21.0	N	5.0	E	11	NW	NE	NE	62	0	0	X	11/02/95	0	424021.600	3897818.300	MONITOR	ARIZONA ARMY NATL,	
549872	21.0	N	5.0	E	11	NW	NE	NW	50	22	4	X	10/22/95	0	423821.500	3897822.800	MONITOR	ARIZONA ARMY NATL,	
583548	21.0	N	5.0	E	11	NW	NW	SE	21	12	2	X	09/26/00	0	423620.300	3897624.200	MONITOR		ARIZONA ARMY NATIONAL GUA
577359	21.0	N	5.0	E	11	NW	SW		0	0	0			0	423517.800	3897321.000	GEOTECHNICAL		ARIZONA ARMY NATIONAL GUA
577358	21.0	N	5.0	E	11	NW	SW		0	0	0			0	423517.800	3897321.000	GEOTECHNICAL		ARIZONA ARMY NATIONAL GUA
563021	21.0	N	5.0	E	11	NW	SW	NE	34	32	4	X	09/25/97	0	423619.100	3897421.300	MONITOR	AZ ARMY NATL GUARD,	
570389	21.0	N	5.0	E	11	NW	SW	NE	0	0	0			0	423619.100	3897421.300	MONITOR		ARIZONA ARMY NATIONAL GUA
570390	21.0	N	5.0	E	11	NW	SW	NE	0	0	0			0	423619.100	3897421.300	MONITOR		ARIZONA ARMY NATIONAL GUA
570391	21.0	N	5.0	E	11	NW	SW	NE	0	0	0			0	423619.100	3897421.300	MONITOR		ARIZONA ARMY NATIONAL GUA
570392	21.0	N	5.0	E	11	NW	SW	NE	0	0	0			0	423619.100	3897421.300	MONITOR		ARIZONA ARMY NATIONAL GUA
570393	21.0	N	5.0	E	11	NW	SW	NE	0	0	0			0	423619.100	3897421.300	MONITOR		ARIZONA ARMY NATIONAL GUA
570394	21.0	N	5.0	E	11	NW	SW	NE	0	0	0			0	423619.100	3897421.300	MONITOR		ARIZONA ARMY NATIONAL GUA
570395	21.0	N	5.0	E	11	NW	SW	NE	0	0	0			0	423619.100	3897421.300	WATER PRODUCTION		ARIZONA ARMY NATIONAL GUA
570396	21.0	N	5.0	E	11	NW	SW	NE	0	0	0			0	423619.100	3897421.300	MONITOR		ARIZONA ARMY NATIONAL GUA
570397	21.0	N	5.0	E	11	NW	SW	NE	0	0	0			0	423619.100	3897421.300	MONITOR		ARIZONA ARMY NATIONAL GUA
570398	21.0	N	5.0	E	11	NW	SW	NE	0	0	0			0	423619.100	3897421.300	MONITOR		ARIZONA ARMY NATIONAL GUA
570399	21.0	N	5.0	E	11	NW	SW	NE	0	0	0			0	423619.100	3897421.300	PIEZOMETER		ARIZONA ARMY NATIONAL GUA
570400	21.0	N	5.0	E	11	NW	SW	NE	0	0	0			0	423619.100	3897421.300	PIEZOMETER		ARIZONA ARMY NATIONAL GUA
570401	21.0	N	5.0	E	11	NW	SW	NE	0	0	0			0	423619.100	3897421.300	GEOTECHNICAL		ARIZONA ARMY NATIONAL GUA
570402	21.0	N	5.0	E	11	NW	SW	NE	0	0	0			0	423619.100	3897421.300	GEOTECHNICAL		ARIZONA ARMY NATIONAL GUA
570403	21.0	N	5.0	E	11	NW	SW	NE	0	0	0			0	423619.100	3897421.300	GEOTECHNICAL		ARIZONA ARMY NATIONAL GUA
583511	21.0	N	5.0	E	11	NW	SW	NE	0	0	0			0	423619.100	3897421.300	GEOTECHNICAL		ARIZONA ARMY NATIONAL GUA
592557	21.0	N	5.0	E	11	NW	SW	NE	39	18	5	X	06/06/02	0	423619.100	3897421.300	MONITOR		ARIZONA ARMY NATIONAL GUA
525515	21.0	N	5.0	E	11	NW	SW	NW	19	16	2	X	08/07/89	0	423418.400	3897424.100	MONITOR		ARIZONA NATIONAL GUARD

Reg. No.	Town	North	Range	East	Sect.	Ac 160	Ac 40	Ac 10	Depth	DTW	Dia.	Log	Drilled	Rate	UTMX	UTMY	Well Use	Last Name	Company
563020	21.0	N	5.0	E	11	NW	SW	NW	32	30	4	X	09/25/98	0	423418.400	3897424.100	MONITOR	AZ ARMY NTL GUARD,	
563023	21.0	N	5.0	E	11	NW	SW	NW	22	20	4	X	09/26/97	0	423418.400	3897424.100	MONITOR	AZ ARMY NATL GUARD,	
563019	21.0	N	5.0	E	11	NW	SW	NW	35	34	4		09/24/98	0	423418.400	3897424.100	MONITOR	AZ ARMY NATL GUARD,	
577356	21.0	N	5.0	E	11	NW	SW	NW	0	0	0			0	423418.400	3897424.100	GEOTECHNICAL		
583549	21.0	N	5.0	E	11	NW	SW	NW	18	0	6	X	09/27/00	0	423418.400	3897424.100	MONITOR		ARIZONA ARMY NATIONAL GUA
592558	21.0	N	5.0	E	11	NW	SW	NW	14	13	5	X	06/05/02	0	423418.400	3897424.100	MONITOR		ARIZONA ARMY NATIONAL GUA
592559	21.0	N	5.0	E	11	NW	SW	NW	25	22	5	X	06/12/02	0	423418.400	3897424.100	MONITOR		ARIZONA ARMY NATIONAL GUA
592560	21.0	N	5.0	E	11	NW	SW	NW	0	0	0			0	423418.400	3897424.100	MONITOR		ARIZONA ARMY NATIONAL GUA
592561	21.0	N	5.0	E	11	NW	SW	NW	0	0	0			0	423418.400	3897424.100	MONITOR		ARIZONA ARMY NATIONAL GUA
592562	21.0	N	5.0	E	11	NW	SW	NW	0	0	0			0	423418.400	3897424.100	MONITOR		ARIZONA ARMY NATIONAL GUA
544384	21.0	N	5.0	E	11	NW	SW	SW	146	137	4	X	07/06/94	0	423416.900	3897220.500	MONITOR		ARIZONA ARMY NATIONAL GUA
563024	21.0	N	5.0	E	11	NW	SW	SW	19	16	4	X	09/26/97	0	423416.900	3897220.500	MONITOR		ARIZONA NATIONAL GUARD
525514	21.0	N	5.0	E	11	NW	SW	SW	15	8	2	X	08/07/89	0	423416.900	3897220.500	MONITOR	AZ ARMY NATL GUARD,	
563022	21.0	N	5.0	E	11	NW	SW	SW	18	14	4	X	09/24/97	0	423416.900	3897220.500	MONITOR		ARIZONA NATIONAL GUARD
563025	21.0	N	5.0	E	11	NW	SW	SE	21	18	4	X	09/26/97	0	423617.900	3897218.400	MONITOR	AZ ARMY NATL GUARD,	
563026	21.0	N	5.0	E	11	NW	SE	SW	12	10	4	X	09/24/98	0	423818.600	3897216.300	MONITOR	AZ ARMY NTL GUARD,	
549860	21.0	N	5.0	E	11	SW	NW	SW	0	0	0			0	423413.900	3896813.200	MONITOR	AZ ARMY NTL GUARD,	
549861	21.0	N	5.0	E	11	SW	NW	SW	0	0	0			0	423413.900	3896813.200	MONITOR	ARIZONA ARMY NATL,	
805692	21.0	N	5.0	E	11	SW	NW	SW	1647	1273	12		04/11/50	65	423413.900	3896813.200	WATER PRODUCTION	ARIZONA ARMY NATL,	
544385	21.0	N	5.0	E	11	SW	NW	SW	96	0	4	X	07/07/94	0	423413.900	3896813.200	ABANDONED		ARIZONA ARMY NATIONAL GUA
400201	21.0	N	5.0	E	11	SW	NW	SE	0	0	0			0	423615.500	3896812.600	ABANDONED		ARIZONA NATIONAL GUARD
533244	21.0	N	5.0	E	11	SW	SE	NW	22	14	2	X	10/15/91	0	423815.600	3896609.900	ABANDONED		ARIZONA NATIONAL GUARD
575521	21.0	N	5.0	E	11	SE	NE	SW	0	0	0			0	424620.900	3896809.700	MONITOR		ARIZONA NATIONAL GUARD
575520	21.0	N	5.0	E	11	SE	NW	SE	0	0	0			0	424419.800	3896810.300	MONITOR		ARIZONA ARMY NATIONAL GUA
575519	21.0	N	5.0	E	11	SE	SW	NE	0	0	0			0	424419.500	3896610.400	MONITOR		ARIZONA ARMY NATIONAL GUA
533241	21.0	N	5.0	E	11	SE	SW	NW	27	17	2	X	10/14/91	0	424218.200	3896610.300	ABANDONED		ARIZONA ARMY NATIONAL GUA
533242	21.0	N	5.0	E	11	SE	SW	NW	28	18	2	X	10/14/91	0	424218.200	3896610.300	ABANDONED		ARIZONA NATIONAL GUARD
533243	21.0	N	5.0	E	11	SE	SW	NW	0	0	0			0	424218.200	3896610.300	MONITOR		ARIZONA NATIONAL GUARD
533245	21.0	N	5.0	E	11	SE	SW	NW	0	0	0			0	424218.200	3896610.300	MONITOR		ARIZONA NATIONAL GUARD
533239	21.0	N	5.0	E	11	SE	SW	NW	250	17	2	X	10/10/91	0	424218.200	3896610.300	ABANDONED		ARIZONA NATIONAL GUARD
533240	21.0	N	5.0	E	11	SE	SW	NW	27	17	2	X	10/11/91	0	424218.200	3896610.300	MONITOR		ARIZONA NATIONAL GUARD
575352	21.0	N	5.0	E	12	SE	NE	NE	0	0	0			0	426439.200	3897006.000	MONITOR		ARIZONA NATIONAL GUARD
575353	21.0	N	5.0	E	12	SE	NE	NE	0	0	0			0	426439.200	3897006.000	MONITOR		ARIZONA ARMY NATIONAL GUA
582467	21.0	N	5.0	E	12	SE	NE	NE	0	0	0			0	426439.200	3897006.000	MONITOR		ARIZONA ARMY NATIONAL GUA
582468	21.0	N	5.0	E	12	SE	NE	NE	0	0	0			0	426439.200	3897006.000	MONITOR		ARIZONA ARMY NATIONAL GUA
400229	21.0	N	5.0	E	12	SE	NE	SW	0	0	0			0	426439.200	3897006.000	ABANDONED		ARIZONA ARMY NATIONAL GUA
576760	21.0	N	5.0	E	12	SE	NE	SW	0	0	0			0	426237.200	3896805.100	MONITOR		ARIZONA ARMY NATIONAL GUA
576761	21.0	N	5.0	E	12	SE	NE	SW	0	0	0			0	426237.200	3896805.100	MONITOR		U S ARMY NATIONAL GUARD
576762	21.0	N	5.0	E	12	SE	NE	SW	0	0	0			0	426237.200	3896805.100	MONITOR		U S ARMY NATIONAL GUARD
757350	21.0	N	5.0	E	12	SE	NE	SE	0	0	0			0	426439.500	3896804.600			U S ARMY NATIONAL GUARD
575350	21.0	N	5.0	E	12	SE	NE	SE	30	8	4	X	07/13/00	0	426439.500	3896804.600	MONITOR		ARIZONA ARMY NATIONAL GUA
575351	21.0	N	5.0	E	12	SE	NE	SE	25	0	4	X	07/14/99	0	426439.500	3896804.600	MONITOR		ARIZONA ARMY NATIONAL GUA
576759	21.0	N	5.0	E	12	SE	NE	SE	0	0	0			0	426439.500	3896804.600	GEOTECHNICAL		ARIZONA ARMY NATIONAL GUA
577853	21.0	N	5.0	E	12	SE	NE	SE	0	0	0			0	426439.500	3896804.600	GEOTECHNICAL		U S ARMY NATIONAL GUARD
549878	21.0	N	5.0	E	14	NW	NE	SW	180	0	0	X	10/23/95	0	423810.800	3896008.400	MONITOR	ARIZONA ARMY NATL,	ARIZONA ARMY NATIONAL GUA

ADWR 55-Files
Grenfield Land Development

Reg. No.	Town	North	Range	East	Sect.	Ac 160	Ac 40	Ac 10	Depth	DTW	Dia.	Log	Drilled	Rate	UTMX	UTMY	Well Use	Last Name	Company
549879	21.0	N	5.0	E	14	NW	NE	SW	0	0	0			0	423810.800	3896008.400	MONITOR	ARIZONA ARMY NATL.	
549877	21.0	N	5.0	E	14	NW	NE	SE	78	43	4	X	10/21/95	0	424012.400	3896009.400	MONITOR	ARIZONA ARMY NATL.	
549880	21.0	N	5.0	E	14	NW	NE	SE	0	0	0			0	424012.400	3896009.400	MONITOR	ARIZONA ARMY NATL.	
514933	21.0	N	5.0	E	19	SW	NW	NW	264	190	6	X	10/09/86	10	417083.400	3893641.400	WATER PRODUCTION	JONES	
514934	21.0	N	5.0	E	19	SW	SW	SW	90	50	6	X	10/30/86	7	417075.600	3893014.800	WATER PRODUCTION	JONES	
808692	21.0	N	5.0	E	27	NE	NW	NE	28	28	4		11/07/80	0	422784.000	3893001.500	MONITOR		
808693	21.0	N	5.0	E	27	NE	NW	NE	28	28	4		11/07/80	0	422784.000	3893001.500	MONITOR		ARIZONA ARMY NATIONAL GUA
559987	21.0	N	5.0	E	27	NE	NW	NW	0	0	0			0	422584.600	3893001.400	GEOTECHNICAL		ARIZONA ARMY NATIONAL GUA
560288	21.0	N	5.0	E	27	NE	NW	NW	350	0	10	X	06/18/97	0	422584.600	3893001.400	MONITOR	ARIZONA ARMY NATL.	
560289	21.0	N	5.0	E	27	NE	NW	NW	208	200	10	X	06/21/97	0	422584.600	3893001.400	MONITOR	AZ ARMY NATL GUARD.	
560519	21.0	N	5.0	E	27	NE	NW	NW	311	348	10	X	06/11/97	0	422584.600	3893001.400	MONITOR	AZ ARMY NATL GUARD.	
549863	21.0	N	5.0	E	27	NW	NW	SE	150	0	0	X	10/19/95	0	421986.200	3892798.400	MONITOR	AZ ARMY NATL GUARD.	
808694	21.0	N	5.0	E	27	NW	SW	NE	28	28	4		11/05/80	0	421986.200	3892596.000	MONITOR	ARIZONA ARMY NATL.	
549869	21.0	N	5.0	E	27	NW	SW	NE	0	0	0			0	421986.200	3892596.000	MONITOR		ARIZONA ARMY NATIONAL GUA
549870	21.0	N	5.0	E	27	NW	SW	NE	0	0	0			0	421986.200	3892596.000	MONITOR	ARIZONA ARMY NATL.	
549864	21.0	N	5.0	E	27	NW	SW	SE	150	0	0	X	10/25/95	0	421986.300	3892393.600	MONITOR	ARIZONA ARMY NATL.	
549868	21.0	N	5.0	E	27	NW	SW	SE	0	0	0			0	421986.300	3892393.600	MONITOR	ARIZONA ARMY NATL.	
549866	21.0	N	5.0	E	28	NE	NE	SW	50	0	0	X	10/18/95	0	421405.200	3892759.100	MONITOR	ARIZONA ARMY NATL.	
549867	21.0	N	5.0	E	28	NE	SE	NE	50	0	0	X	10/18/95	0	421593.000	3892582.400	MONITOR	ARIZONA ARMY NATL.	
549865	21.0	N	5.0	E	28	NE	SE	NW	0	0	0			0	421405.200	3892556.600	MONITOR	ARIZONA ARMY NATL.	
549862	21.0	N	5.0	E	28	NW	SE	NW	0	0	0			0	420654.100	3892453.300	MONITOR	ARIZONA ARMY NATL.	
501286	21.0	N	6.0	E	6	SW	NW	NE	150	0	0			0	426845.200	3898633.800	WATER PRODUCTION	KNUDSEN,C	
531524	21.0	N	6.0	E	6	SW	NW	SE	412	0	8	X	04/30/91	0	426846.300	3898430.600	WATER PRODUCTION	AURAM, JEROME,	
801250	21.0	N	6.0	E	6	SW	SW	NE	200	0	5		09/06/49	100	426847.500	3898227.400	WATER PRODUCTION	CHOI, ANTHONY,	
556586	21.0	N	6.0	E	6	SW	SW	NW	0	0	0			0	426640.700	3898221.700	WATER PRODUCTION	BOIVIN, WAYNE,A	
627313	21.0	N	6.0	E	6	SE	NW		0	0	0			0	427569.500	3898551.400	WATER PRODUCTION	COCONINO NATL FOREST,	
522800	21.0	N	6.0	E	7	NW	NE	NE	147	90	6	X	11/28/88	10	427262.500	3897833.100	WATER PRODUCTION	CROCKATT	
535490	21.0	N	6.0	E	7	SW	NE	SW	49	8	2	X	06/12/92	0	427053.500	3896818.100	MONITOR	DEPT OF ARMY,	
535489	21.0	N	6.0	E	7	SW	NE	SW	150	56	2	X	06/17/92	0	427053.500	3896818.100	MONITOR	DEPT OF ARMY,	
535491	21.0	N	6.0	E	7	SW	NW	SW	0	0	0			0	426642.000	3896807.100	ABANDONED		
575349	21.0	N	6.0	E	7	SW	NW	SW	25	8	4	X	07/13/00	0	426642.000	3896807.100	MONITOR		ARIZONA NATIONAL GUARD
617518	21.0	N	6.0	E	8				0	0	0			0	428984.100	3897160.400	WATER PRODUCTION		ARIZONA ARMY NATIONAL GUA
506048	21.0	N	6.0	E	8	SE	NW	SE	370	300	5	X	08/26/83	5	429283.000	3896862.300	WATER PRODUCTION	HILL,D W	
509555	21.0	N	6.0	E	10	NE	SW	NE	400	315	6	X	07/25/85	0	432514.800	3897472.200	WATER PRODUCTION	SAYLES, VERNON,	
509554	21.0	N	6.0	E	10	SE	NE	NE	100	0	8	X	06/05/85	0	432919.000	3897074.400	ABANDONED	TAYLOR	
516611	21.0	N	6.0	E	10	SE	NE	NE	1700	1275	8	X	05/26/87	25	432919.000	3897074.400	WATER PRODUCTION	BURNS INTERNATIONAL,	
553482	21.0	N	6.0	E	10	SE	NE	SW	345	310	8	X	08/03/96	0	432715.600	3896872.900	WATER PRODUCTION	BURNS, ROBERT,	
631386	21.0	N	6.0	E	10	SE	NE	SW	1800	1050	8			0	432715.600	3896872.900	WATER PRODUCTION	KINNEY, TIMOTHY,	
590546	21.0	N	6.0	E	15	SE	NW	SE	2100	1550	9	X	04/05/02	54	432506.100	3895254.600	WATER PRODUCTION		
559856	21.0	N	6.0	E	22	NE	NE	NE	450	318	6	X	08/15/97	0	432908.400	3894655.100	WATER PRODUCTION		A-1 RANCH HOMEOWNERS ASSO
517785	21.0	N	6.0	E	22	NE	NW	NW	182	0	6	X	07/18/87	0	432297.300	3894639.600	WATER PRODUCTION	HEAL, JAMES,	
536186	21.0	N	6.0	E	22	NW	NE	NW	1140	0	8	X	11/14/92	0	431890.000	3894629.300	WATER PRODUCTION	FRIED, ROBERT,	
537440	21.0	N	6.0	E	23	NE	NE	NE	400	0	0	X	10/22/93	0	434525.400	3894647.900	WATER PRODUCTION	FRIED, ROBERT,	
541534	21.0	N	6.0	E	23	NE	NE	NE	1600	1490	6	X	06/05/94	18	434525.400	3894647.900	WATER PRODUCTION	LITTLE	
552277	21.0	N	6.0	E	23	SW	SW	NW	15	0	4	X	12/21/95	0	433077.200	3893417.800	MONITOR	WEST PARK DEV PRTSP,	
																		WESTWOOD PARTNERS,	

ADWR 55-Files
Grenfield Land Development

Reg. No.	Town	North	Range	East	Sect.	Ac 160	Ac 40	Ac 10	Depth	DTW	Dia.	Log	Drilled	Rate	UTMX	UTMY	Well Use	Last Name	Company
552280	21.0	N	6.0	E	23	SW	SW	NW	0	0	0			0	433077.200	3893417.800	MONITOR	WESTWOOD PARTNERS,	
552278	21.0	N	6.0	E	23	SW	SW	NW	15	0	4	X	12/22/95	0	433077.200	3893417.800	MONITOR	WESTWOOD PARTNERS,	
552279	21.0	N	6.0	E	23	SW	SW	NW	15	0	4	X	12/22/95	0	433077.200	3893417.800	MONITOR	WESTWOOD PARTNERS,	
528588	21.0	N	6.0	E	24	NE	NW	SE	0	0	0			0	435718.300	3894440.900	WATER PRODUCTION	OTTER, HAROLD,	
551757	21.0	N	6.0	E	24	NW	NE	NE	1640	1390	8	X	06/12/96	18	435321.400	3894646.600	WATER PRODUCTION	ZELLER, BRUCE K	
581960	21.0	N	6.0	E	25	NE	NE	NE	1920	1324	8	X	01/15/01	0	436119.000	3893012.100	WATER PRODUCTION		
581959	21.0	N	6.0	E	25	NE	NW	NW	2040	1329	12	X		0	435501.200	3893007.200	WATER PRODUCTION		FLAGSTAFF RANCH WATER COM
581958	21.0	N	6.0	E	25	NE	SW	NW	0	0	0			0	435488.800	3892601.000	WATER PRODUCTION		FLAGSTAFF RANCH GOLF CLUB
588382	21.0	N	6.0	E	25	NE	SW	NW	0	0	0			0	435488.800	3892601.000	WATER PRODUCTION		FLAGSTAFF RANCH GOLF CLUB
581962	21.0	N	6.0	E	25	NE	SW	SE	1780	1302	12	X		0	435686.700	3892397.800	WATER PRODUCTION		FLAGSTAFF RANCH GOLF CLUB
581961	21.0	N	6.0	E	25	NE	SE	NE	2035	1194	8	X		0	436103.600	3892602.300	WATER PRODUCTION		FLAGSTAFF RANCH GOLF CLUB
581964	21.0	N	6.0	E	25	NW	NE	NE	0	0	0			0	435295.300	3893005.600	WATER PRODUCTION		FLAGSTAFF RANCH GOLF CLUB
588379	21.0	N	6.0	E	25	NW	NE	NE	0	0	0			0	435295.300	3893005.600	WATER PRODUCTION		FLAGSTAFF RANCH GOLF CLUB
581965	21.0	N	6.0	E	25	NW	NE	SW	0	0	0			0	435084.400	3892802.100	WATER PRODUCTION		FLAGSTAFF RANCH GOLF CLUB
588380	21.0	N	6.0	E	25	NW	NE	SW	0	0	0			0	435084.400	3892802.100	WATER PRODUCTION		FLAGSTAFF RANCH GOLF CLUB
509020	21.0	N	6.0	E	25	NW	SW	NE	0	0	0			0	434874.700	3892599.800	WATER PRODUCTION		FLAGSTAFF RANCH GOLF CLUB
581963	21.0	N	6.0	E	25	NW	SW	NW	0	0	0			0	434670.700	3892599.400	WATER PRODUCTION	FLAGSTAFF RANCH ASSO,	
588381	21.0	N	6.0	E	25	NW	SW	NW	0	0	0			0	434670.700	3892599.400	WATER PRODUCTION		FLAGSTAFF RANCH GOLF CLUB
509021	21.0	N	6.0	E	25	NW	SW	SE	1810	1182	19	X	03/15/85	65	434870.200	3892398.500	WATER PRODUCTION		FLAGSTAFF RANCH GOLF CLUB
511071	21.0	N	6.0	E	25	NW	SW	SE	1800	1122	12	X	10/20/85	0	434870.200	3892398.500	WATER PRODUCTION	FLAGSTAFF RANCH WTR,	
504916	21.0	N	6.0	E	25	SW	NW	NW	0	0	0			0	434663.400	3892198.100	WATER PRODUCTION	FLAGSTAFF RANCH ASSO,	
620890	21.0	N	6.0	E	28	SW	SW		0	0	3			3	429951.000	3891687.800	WATER PRODUCTION	SUN CNTY DEVELOPMENT,	
620887	21.0	N	6.0	E	32	NE	SW	SW	16	16	0		01/01/00	0	429034.900	3890765.800	WATER PRODUCTION	MILLER BROTHERS,	
620888	21.0	N	6.0	E	32	NE	SE	SE	22	22	0		01/01/20	0	429647.000	3890764.100	WATER PRODUCTION	MILLER BROTHERS,	
805691	21.0	N	6.0	E	32	NW	SE	NE	0	0	0			0	428830.300	3890970.000	WATER PRODUCTION	MILLER BROTHERS,	
540692	21.0	N	6.0	E	33	SW	NW	NW	300	0	0	X	06/08/94	0	429850.100	3890560.400	WATER PRODUCTION		WOODY MOUNTAIN RANCH LLC
501229	21.0	N	6.0	E	34	SW	SW	NE	1008	0	10	X	11/12/81	0	431658.900	3890152.600	WATER PRODUCTION		MILLER BROS LLC
606203	21.0	N	6.0	E	35	NW	SW	SW	1900	1230	14		10/01/57	450	433047.000	3890775.500	WATER PRODUCTION	FLAGSTAFF, CITY OF,	
514593	21.0	N	6.0	E	35	NW	SE	SW	0	0	0			0	433450.400	3890777.100	WATER PRODUCTION	FLAGSTAFF, CITY OF,	
644988	21.0	N	6.0	E	35	NW	SE	SW	0	0	0			0	433450.400	3890777.100	WATER PRODUCTION	TRANSITION ZONE,	
606201	21.0	N	6.0	E	35	SW	NW	SE	1600	1230	12	X	12/01/54	270	433250.600	3890362.100	WATER PRODUCTION	T Z H INSTITUTE INC,	
606202	21.0	N	6.0	E	35	SW	SW	NW	1746	1227	12	X	07/01/56	300	433049.000	3890152.800	WATER PRODUCTION	FLAGSTAFF, CITY OF,	
606204	21.0	N	6.0	E	35	SW	SW	SW	2030	1115	14	X	11/01/57	500	433049.600	3889945.300	WATER PRODUCTION	FLAGSTAFF, CITY OF,	
613886	22.0	N	5.0	E	2	SE	SW	SE	40	39	0			1	424490.500	3907728.400	WATER PRODUCTION	FLAGSTAFF, CITY OF,	
527218	22.0	N	5.0	E	3	SE	SW	SW	225	0	12	X	01/05/90	0	422676.800	3907737.300	ABANDONED	C O BAR LIVESTOCK,	
527694	22.0	N	5.0	E	3	SE	SW	SW	50	27	8	X	04/17/90	205	422676.800	3907737.300	WATER PRODUCTION	BELMONT WATER CO,	
564712	22.0	N	5.0	E	7	NE	NW	SE	0	0	0			0	418131.300	3907369.300	WATER PRODUCTION		BELMONT WATER CO INC
578492	22.0	N	5.0	E	8	SW	NE	NE	490	0	5	X	11/09/99	0	419257.300	3906753.800	WATER PRODUCTION	SACHELI	
527792	22.0	N	5.0	E	10	NE	NW	NW	110	47	8	X	04/18/90	35	422673.800	3907537.500	WATER PRODUCTION	SCHMID	
627305	22.0	N	5.0	E	13	NE	SW		0	0	0			0	426022.900	3905354.500	WATER PRODUCTION	HUTCH, MARVIN,	
613887	22.0	N	5.0	E	13	SE	SW	NW	30	29	0			2	425915.200	3904655.200	WATER PRODUCTION	COCONINO NATL FOREST,	
200712	22.0	N	5.0	E	16	SW	NE	SW	950	0	6	X		0	420641.300	3904926.400	CATHODIC	C O BAR LIVESTOCK,	
610507	22.0	N	5.0	E	16	SE	NW		850	380	5		05/20/66	6	421143.700	3905027.600	WATER PRODUCTION		TRANSWESTERN PIPELINE COM
602867	22.0	N	5.0	E	18	NW	NW	NE	420	360	6		01/01/79	0	417399.100	3905963.600	WATER PRODUCTION	TRANSWESTERN PIPELIN,	
500521	22.0	N	5.0	E	18	NW	NW	NE	420	365	6	X	11/16/80	1	417399.100	3905963.600	WATER PRODUCTION	WOODWARD, ROBERT,D	
																		MAXWELL	

Reg. No.	Town	North	Range	East	Sect.	Ac 160	Ac 40	Ac 10	Depth	DTW	Dia.	Log	Drilled	Rate	UTMX	UTMY	Well Use	Last Name	Company
540157	22.0	N	5.0	E	18	NW	NW	NW	0	0	0			0	417221.200	3905966.500	WATER PRODUCTION	VALLEJO, DAVID,F	
583110	22.0	N	5.0	E	18	SW	NE	NE	410	0	7	X	10/26/00	0	417741.800	3905152.400	WATER PRODUCTION	ANDERSON	
525187	22.0	N	5.0	E	18	SW	NW	NW	180	0	7	X	10/17/89	12	417200.800	3905163.900	WATER PRODUCTION	MELLEN, DONALD,	
529284	22.0	N	5.0	E	18	SW	SE	NW	0	0	0			0	417554.700	3904754.200	WATER PRODUCTION	THOMPSON, MARY,H	
534235	22.0	N	5.0	E	18	SW	SE	NW	0	0	0			0	417554.700	3904754.200	WATER PRODUCTION	THOMPSON, MARY,H	
539305	22.0	N	5.0	E	18	SW	SE	NW	280	0	7	X	10/14/93	0	417554.700	3904754.200	WATER PRODUCTION	THOMPSON, MARY,H	
560190	22.0	N	5.0	E	20	NE	NE	SE	220	170	8	X	12/13/96	15	420037.500	3904116.500	WATER PRODUCTION	O'DELL, MELVIN,	
521503	22.0	N	5.0	E	20	SW	SW	NE	110	88	7	X	07/31/88	0	418837.900	3903126.000	WATER PRODUCTION	CHRISTENSEN, CHARLES,	
579604	22.0	N	5.0	E	20	SE	NE	NE	220	170	5	X	10/16/00	0	420036.100	3903514.800	WATER PRODUCTION	DODD	
803023	22.0	N	5.0	E	20	SE	NE	NW	195	0	5		10/01/77	0	419836.800	3903516.600	WATER PRODUCTION	DODD TOWNSEND,	
646820	22.0	N	5.0	E	20	SE	NE	NW	195	0	5		10/01/77	0	419836.800	3903516.600	WATER PRODUCTION	DODD,T	
572358	22.0	N	5.0	E	20	SE	NE	SE	0	0	0			0	420035.600	3903314.200	WATER PRODUCTION	JOHNSON	
512698	22.0	N	5.0	E	21	SW	NW	SW	110	0	0	X	03/10/86	0	420235.500	3903312.800	WATER PRODUCTION	TOY, CHARLES,L	
579593	22.0	N	5.0	E	21	SW	NW	SW	440	0	7	X	02/07/01	0	420235.500	3903312.800	WATER PRODUCTION	ATWATER	
201002	22.0	N	5.0	E	21	SW	NW	SW	0	0	0			0	420235.500	3903312.800	WATER PRODUCTION	ATWATER	
627310	22.0	N	5.0	E	25	SW	SW		0	0	0			0	425189.600	3901441.200	WATER PRODUCTION	COCONINO NATL FOREST,	
524148	22.0	N	5.0	E	27	SE	SE	SE	300	156	1	X	08/24/89	6	423217.200	3901266.600	WATER PRODUCTION	BAHA'IS OF FLAGSTAFF,	
802262	22.0	N	5.0	E	29	NE			20	16	8		01/01/20	0	419734.300	3902411.200	WATER PRODUCTION	PRINGLE,R E	
524402	22.0	N	5.0	E	29	SE	NE	NE	140	0	7	X	05/20/89	5	420033.300	3901901.600	WATER PRODUCTION	WINCHESTER, C.,	
560468	22.0	N	5.0	E	34	SE	NE	NW	0	0	0			0	423014.000	3900264.200	MONITOR	BONES, WILLIAM,	
200355	22.0	N	5.0	E	35	NW	SE	NW	0	0	0			0	423829.200	3900680.300	WATER PRODUCTION		WIN-PETER INC
560469	22.0	N	5.0	E	35	SW	NW	SW	0	0	0			0	423407.900	3900053.600	WATER PRODUCTION	BONES, WILLIAM,	
560467	22.0	N	5.0	E	35	SW	SW	SW	0	0	0			0	423403.300	3899647.100	WATER PRODUCTION	BONES, WILLIAM,	
513823	22.0	N	5.0	E	35	SW	SE	SE	225	21	6	X	04/29/86	130	424003.400	3899647.800	WATER PRODUCTION	BONES, WILLIAM,W	
514216	22.0	N	5.0	E	35	SW	SE	SE	223	21	6	X	05/06/86	0	424003.400	3899647.800	WATER PRODUCTION	BONES, WILLIAM,W	
526470	22.0	N	5.0	E	35	SE	SW	SW	245	68	12	X	12/27/89	250	424205.100	3899648.000	WATER PRODUCTION	BELLEMONT WATER CO,	
593267	22.0	N	5.0	E	36	NW	SE	SW	2400	1550	8	X	04/25/03	0	425468.900	3900486.400	WATER PRODUCTION	MCCLEVE	
606639	22.0	N	5.0	E	36	SW	SW		65	55	6		10/01/60	65	425122.700	3899756.600	WATER PRODUCTION	BOMKAMP,F A	
598623	22.0	N	5.0	E	36	SW	SW	SW	300	246	6	X	01/05/04	0	425019.700	3899649.400	WATER PRODUCTION		FUELCO
598834	22.0	N	5.0	E	36	SW	SW	SW	2100	1542	8	X		0	425019.700	3899649.400	WATER PRODUCTION		FUELCO
203241	22.0	N	5.0	E	36	SW	SW	SW	2801	1590	9	X		0	425019.700	3899649.400	WATER PRODUCTION		GREENFIELD LAND DEVELOPME
515324	22.0	N	5.0	E	36	SW	SW	SE	105	22	6	X	07/10/87	54	425225.100	3899647.300	WATER PRODUCTION	MARTINSON, LEONARD,	
564258	22.0	N	5.0	E	36	SW	SW	SE	300	16	7	X	07/29/98	0	425225.100	3899647.300	WATER PRODUCTION	BELLEMONT TRAVEL CTR,	
559096	22.0	N	5.0	E	36	SW	SW	SE	240	42	8	X	02/20/97	18	425225.100	3899647.300	WATER PRODUCTION		BELLEMONT TRAVEL CTR
503545	22.0	N	5.0	E	36	SW	SE	SW	215	111	6	X	09/01/82	14	425426.800	3899646.200	WATER PRODUCTION	FRED BOMKAMP WATER,	
592845	22.0	N	5.0	E	36	SE	SW	SW	30	0	4	X	06/01/03	0	425830.000	3899644.100	MONITOR		UTILITY SOURCE LLC
540801	22.0	N	6.0	E	2	SW	NW	NE	0	0	0			0	433361.100	3908364.600	MONITOR	AZ ARMY NATL GUARD,	
540802	22.0	N	6.0	E	2	SW	NW	NE	0	0	0			0	433361.100	3908364.600	MONITOR	AZ ARMY NATL GUARD,	
540803	22.0	N	6.0	E	2	SW	NW	NE	0	0	0			0	433361.100	3908364.600	MONITOR	AZ ARMY NATL GUARD,	
632993	22.0	N	6.0	E	2	SE	NW	NW	1765	1625	6		07/26/63	8	433967.200	3908365.700	WATER PRODUCTION	A T & T CO,	
558713	22.0	N	6.0	E	4	NW	SE	NE	0	0	0			0	430539.900	3908772.600	WATER PRODUCTION	RITLAND, JUANITA,	
547062	22.0	N	6.0	E	4	NW	SE	NE	0	0	0			0	430539.900	3908772.600	WATER PRODUCTION	RITLAND, JUANITA,	
547063	22.0	N	6.0	E	4	NW	SE	NW	0	0	0			0	430339.500	3908771.200	WATER PRODUCTION	RITLAND JUANITA,	
558710	22.0	N	6.0	E	4	NW	SE	NW	62	10	6	X	11/17/96	0	430339.500	3908771.200	WATER PRODUCTION	RITLAND, JUANITA,	
547061	22.0	N	6.0	E	4	NW	SE	SW	0	0	0			0	430343.900	3908562.100	WATER PRODUCTION	RITLAND, JUANITA,	

ADWR 55-Files
Grenfield Land Development

Reg. No.	Town	North	Range	East	Sect.	Ac 160	Ac 40	Ac 10	Depth	DTW	Dia.	Log	Drilled	Rate	UTMX	UTMY	Well Use	Last Name	Company
558711	22.0	N	6.0	E	4	NW	SE	SW	0	0	0			0	430343.900	3908562.100	WATER PRODUCTION	RITLAND, JUANITA,	
547060	22.0	N	6.0	E	4	NW	SE	SE	0	0	0			0	430544.100	3908564.600	WATER PRODUCTION	RITLAND, JUANITA,	
558712	22.0	N	6.0	E	4	NW	SE	SE	600	0	0	X	11/01/96	0	430544.100	3908564.600	WATER PRODUCTION	RITLAND, JUANITA,	
508375	22.0	N	6.0	E	20	SE	NE	SE	0	0	0	X	06/15/84	0	429720.900	3903298.800	MINERAL EXPLORATION	WESTERN MINING RES.	
578438	22.0	N	6.0	E	23	NE	NE	SW	210	85	6	X	03/19/00	0	434371.100	3904147.100	WATER PRODUCTION	ALLEN AND SANCHEZ	
558644	22.0	N	6.0	E	23	NE	NW	NE	165	110	8	X	08/26/96	0	434169.600	3904338.100	WATER PRODUCTION	BOROWSKY	
901162	22.0	N	6.0	E	23	NE	NW	NW	0	0	0			0	433967.800	3904328.100		CROWLEY	
900213	22.0	N	6.0	E	23	NE	NW	NW	240	177	6	X		0	433967.800	3904328.100		MURRAY	
567619	22.0	N	6.0	E	23	NE	NW	SE	500	0	8	X	06/29/98	0	434169.300	3904137.700	CATHODIC		TRANSWESTERN PIPELINE COM
594499	22.0	N	6.0	E	23	NE	NW	SE	0	0	0			0	434169.300	3904137.700	WATER PRODUCTION	PUGH	
565240	22.0	N	6.0	E	23	NE	SW	NE	240	175	8	X		0	434169.000	3903937.100	WATER PRODUCTION	TIERNEY-KAVANAUGH	
563208	22.0	N	6.0	E	23	NE	SW	NE	280	196	8	X	07/15/97	0	434169.000	3903937.100	WATER PRODUCTION	IRONS, CHRIS,	
583369	22.0	N	6.0	E	23	NE	SW	NW	230	150	5	X		0	433967.100	3903928.200	WATER PRODUCTION	CRABB	
588128	22.0	N	6.0	E	23	NE	SW	SW	260	160	6	X	11/12/01	0	433966.800	3903728.100	WATER PRODUCTION	CHORNENKY	
588363	22.0	N	6.0	E	23	NE	SW	SW	250	180	5	X	11/05/01	0	433966.800	3903728.100	WATER PRODUCTION	GARDINER	
510980	22.0	N	6.0	E	23	NW	NE	NE	175	105	6	X	05/12/85	8	433766.000	3904318.100	WATER PRODUCTION	FAREIO	
511372	22.0	N	6.0	E	23	NW	NE	NW	300	240	6	X	07/23/85	3	433564.300	3904308.100	WATER PRODUCTION	CROFT,B D	
518887	22.0	N	6.0	E	23	NW	NW	NE	0	0	0			0	433362.500	3904298.100	WATER PRODUCTION	FAIRFIELD SNOWBOWL,	
613506	22.0	N	6.0	E	23	NW	SW	NW	180	153	6			5	433159.500	3903892.300	WATER PRODUCTION	INDIAN ROCK RANCHES,	
613505	22.0	N	6.0	E	23	NW	SW	SW	225	142	6		05/16/69	20	433158.800	3903694.300	WATER PRODUCTION	INDIAN ROCK RANCHES,	
803104	22.0	N	6.0	E	23	NW	SW	SW	247	0	0		05/01/75	0	433158.800	3903694.300	WATER PRODUCTION	MARKER, WAYNE,L	
900268	22.0	N	6.0	E	23	NW	SW	SW	315	246	5			0	433158.800	3903694.300			
900269	22.0	N	6.0	E	23	NW	SE	NW	225	158	5	X		0	433563.300	3903910.300			VIRTU' CONSULTING
511373	22.0	N	6.0	E	23	SW	NE	SW	175	104	6	X	08/27/85	15	433561.800	3903313.300	WATER PRODUCTION		VIRTU' CONSULTING
503894	22.0	N	6.0	E	23	SW	NW	NW	265	145	6	X	10/22/82	38	433158.200	3903496.400	CAPPED	GUSTAFSON,G	
546176	22.0	N	6.0	E	23	SW	NW	NW	240	197	8	X	01/03/95	0	433158.200	3903496.400	WATER PRODUCTION	FRERICHS,J W	
606967	22.0	N	6.0	E	23	SW	NW	SW	185	122	6		06/25/73	15	433157.500	3903298.400	WATER PRODUCTION	JOHNSON, BOB,	
630400	22.0	N	6.0	E	23	SW	NW	SW	182	180	6		06/25/73	15	433157.500	3903298.400	WATER PRODUCTION	TEAGUE,R E	
631059	22.0	N	6.0	E	23	SW	SW	NW	182	116	8		07/26/72	15	433156.600	3903100.400	WATER PRODUCTION	REAGUE,R E	
643882	22.0	N	6.0	E	23	SW	SW	NW	192	102	6		04/22/74	16	433156.600	3903100.400	WATER PRODUCTION	AVERY,C C	
543978	22.0	N	6.0	E	23	SW	SW	SW	0	0	0			0	433155.900	3902902.600	WATER PRODUCTION	WILLIAMSON,R G	
564835	22.0	N	6.0	E	23	SW	SW	SW	152	89	6	X		0	433155.900	3902902.600	WATER PRODUCTION	ULRICH, PHIL,	
504028	22.0	N	6.0	E	23	SW	SW	SW	250	100	7	X	10/01/82	0	433155.900	3902902.600	WATER PRODUCTION	JOHNSON	
568924	22.0	N	6.0	E	23	SW	SW	SW	135	85	5	X	08/14/98	10	433155.900	3902902.600	WATER PRODUCTION	HOLMESLEY,B J	
556365	22.0	N	6.0	E	23	SW	SW	SW	130	80	5	X	11/22/96	10	433155.900	3902902.600	WATER PRODUCTION	STELLING	
528301	22.0	N	6.0	E	23	SW	SW	SE	130	82	3	X	06/24/90	10	433358.600	3902909.000	WATER PRODUCTION	BAUR, MARVIN,	
534792	22.0	N	6.0	E	23	SW	SW	SE	110	90	5	X	08/05/92	0	433358.600	3902909.000	WATER PRODUCTION	RYE, ROBERT,	
598941	22.0	N	6.0	E	23	SW	SW	SE	250	101	5	X		0	433358.600	3902909.000	WATER PRODUCTION	STASKO, MICHAEL,W	
802058	22.0	N	6.0	E	23	SW	SE		160	0	0		01/01/62	6	433662.300	3903018.300	WATER PRODUCTION	POLLARD	
649987	22.0	N	6.0	E	23	SW	SE		220	0	4		01/01/50	25	433662.300	3903018.300	WATER PRODUCTION	SMITH, KELLY,J	
601125	22.0	N	6.0	E	23	SW	SE	NE	190	80	6		08/13/79	10	433763.500	3903121.300	WATER PRODUCTION	BECKAGE,R	
583691	22.0	N	6.0	E	23	SW	SE	NE	150	99	6	X	05/03/01	0	433763.500	3903121.300	WATER PRODUCTION	REED,F D	
901309	22.0	N	6.0	E	23	SW	SE	SW	0	0	0			0	433560.800	3902915.400		MARTIN	
562796	22.0	N	6.0	E	23	SW	SE	SE	200	153	7	X	08/26/97	0	433763.100	3902921.900	WATER PRODUCTION		VIRTU' CONSULTING
561971	22.0	N	6.0	E	23	SE	NW	NW	295	200	8	X	07/10/97	0	433966.400	3903528.200	WATER PRODUCTION	CRABB, NORMAN,M	
																		MALIN, MARC,	

ADWR 55-Files
Grenfield Land Development

Reg. No.	Town	North	Range	East	Sect.	Ac 160	Ac 40	Ac 10	Depth	DTW	Dia.	Log	Drilled	Rate	UTMX	UTMY	Well Use	Last Name	Company
504135	22.0	N	6.0	E	23	SE	NW	NW	195	100	6	X	10/26/82	10	433966.400	3903528.200	WATER PRODUCTION	NUNN,J	
644021	22.0	N	6.0	E	23	SE	NW	SW	128	120	6		12/04/77	14	433966.100	3903328.200	WATER PRODUCTION	LOPEZ,V P	
801969	22.0	N	6.0	E	23	SE	NW	SE	200	0	0			0	434168.100	3903335.600	WATER PRODUCTION	HENDERSON	
601319	22.0	N	6.0	E	23	SE	SW		160	124	6		07/20/78	15	434066.800	3903031.600	WATER PRODUCTION	MC QUATTERS,D W	
804825	22.0	N	6.0	E	23	SE	SW		0	0	0		05/01/37	0	434066.800	3903031.600	WATER PRODUCTION	PEARSON, SHIRLEY,	
640745	22.0	N	6.0	E	23	SE	SW		160	120	0		06/18/79	10	434066.800	3903031.600	WATER PRODUCTION	MAURO,D J	
515470	22.0	N	6.0	E	23	SE	SW	NW	190	93	5	X	10/16/86	10	433965.700	3903128.300	WATER PRODUCTION	KLISS, CHARLES,	
543468	22.0	N	6.0	E	23	SE	SW	SW	185	80	7	X	05/16/94	10	433965.300	3902928.300	WATER PRODUCTION	ULRICH, PHIL,	
537638	22.0	N	6.0	E	23	SE	SE		19	0	0	X	01/05/93	0	434470.800	3903044.900	GEOTECHNICAL	EGB ENTERPRISES INC,	
529883	22.0	N	6.0	E	23	SE	SE	SE	26	18	4	X	11/16/90	0	434571.700	3902947.600	MONITOR	FAIRFIELD SNOWBOWL,	
529884	22.0	N	6.0	E	23	SE	SE	SE	0	0	0			0	434571.700	3902947.600	MONITOR	FAIRFIELD SNOWBOWL,	
535789	22.0	N	6.0	E	23	SE	SE	SE	27	20	4	X	06/26/92	0	434571.700	3902947.600	MONITOR	FAIRFIELD SNOWBOWL,	
545888	22.0	N	6.0	E	23	SE	SE	SE	0	0	0			0	434571.700	3902947.600	MONITOR	FAIRFIELD-FORT VALLE,Y	
529715	22.0	N	6.0	E	23	SE	SE	SE	31	20	4	X	11/16/90	0	434571.700	3902947.600	MONITOR	FAIRFIELD SNOWBOWL,	
529764	22.0	N	6.0	E	23	SE	SE	SE	0	0	0	X	11/07/90	0	434571.700	3902947.600	GEOTECHNICAL	FAIRFIELD SNOWBOWL,	
535790	22.0	N	6.0	E	23	SE	SE	SE	28	20	4	X	06/26/92	0	434571.700	3902947.600	MONITOR	FAIRFIELD SNOWBOWL,	
632843	22.0	N	6.0	E	23	SE	SE	SE	207	71	6		11/16/79	8	434571.700	3902947.600	WATER PRODUCTION	FAIRFIELD SNOWBOWL,	
900474	22.0	N	6.0	E	23	SE	SE	SE	0	0	0			0	434571.700	3902947.600			FAIRFIELD FORT VALLEY, IN
618892	22.0	N	6.0	E	24	SW	SW	NW	150	0	6		01/01/69	10	434770.600	3903148.800	WATER PRODUCTION	THUNDERHEAD RANCHES,	
530056	22.0	N	6.0	E	24	SW	SW	SW	26	18	4	X	11/16/90	0	434770.100	3902946.900	MONITOR	NATL FOREST SERVICE,	
530059	22.0	N	6.0	E	24	SW	SW	SW	32	26	4	X	12/18/90	0	434770.100	3902946.900	MONITOR	NATL FOREST SERVICE,	
529885	22.0	N	6.0	E	24	SW	SW	SW	31	21	4	X	12/27/90	0	434770.100	3902946.900	MONITOR	NATL FOREST SERVICE,	
529887	22.0	N	6.0	E	24	SW	SW	SW	0	0	0	X	12/19/90	0	434770.100	3902946.900	GEOTECHNICAL	COCONINO NATL FOREST,	
530057	22.0	N	6.0	E	24	SW	SW	SW	31	20	4	X	11/16/90	0	434770.100	3902946.900	MONITOR	NATL FOREST SERVICE,	
530058	22.0	N	6.0	E	24	SW	SW	SW	26	19	4	X	11/16/90	0	434770.100	3902946.900	MONITOR	NATL FOREST SERVICE,	
530060	22.0	N	6.0	E	24	SW	SW	SW	32	23	4	X	12/19/90	0	434770.100	3902946.900	MONITOR	NATL FOREST SERVICE,	
629703	22.0	N	6.0	E	25	NE	SE	SW	0	0	0			0	435953.800	3902093.000	WATER PRODUCTION	GARRETSON,J D	
601851	22.0	N	6.0	E	25	NW			0	0	0			0	435067.300	3902431.400	WATER PRODUCTION	SKI LIFT LODGE,	
649535	22.0	N	6.0	E	25	NW			86	78	6		09/24/80	10	435067.300	3902431.400	WATER PRODUCTION	HOUSE,W D	
570116	22.0	N	6.0	E	25	NW	NW	NE	35	15	4	X	09/02/98	0	434969.200	3902737.000	TEST		FAIRFIELD FORT VALLEY INC
530054	22.0	N	6.0	E	25	NW	NW	NW	31	23	4	X	12/18/90	0	434771.200	3902745.100	MONITOR	SKI LIFT LODGE,	
530055	22.0	N	6.0	E	25	NW	NW	NW	31	21	4	X	12/27/90	0	434771.200	3902745.100	MONITOR	SKI LIFT LODGE,	
535786	22.0	N	6.0	E	25	NW	NW	NW	34	20	4	X	06/25/92	0	434771.200	3902745.100	MONITOR	GREENE, ROBERT,	
535788	22.0	N	6.0	E	25	NW	NW	NW	0	0	0			0	434771.200	3902745.100	MONITOR	GREENE, ROBERT,	
563840	22.0	N	6.0	E	25	NW	NW	NW	28	28	0	X		0	434771.200	3902745.100	GEOTECHNICAL	GREENE	
535787	22.0	N	6.0	E	25	NW	NW	NW	27	20	4	X	07/15/92	0	434771.200	3902745.100	MONITOR	GREENE, ROBERT,	
566821	22.0	N	6.0	E	25	NW	NW	NW	35	15	4	X	09/01/98	0	434771.200	3902745.100	PIEZOMETER		
900471	22.0	N	6.0	E	25	NW	NW	NW	0	0	0			0	434771.200	3902745.100			FAIRFIELD FORT VALLEY INC
900472	22.0	N	6.0	E	25	NW	NW	NW	0	0	0			0	434771.200	3902745.100			FAIRFIELD FORT VALLEY, IN
900473	22.0	N	6.0	E	25	NW	NW	NW	0	0	0			0	434771.200	3902745.100			FAIRFIELD FORT VALLEY, IN
805261	22.0	N	6.0	E	25	NW	SW	NE	260	260	6		10/18/63	15	434968.100	3902334.500	WATER PRODUCTION	DIETRICH, SIDNEY,W	FAIRFIELD FORT VALLEY, IN
564539	22.0	N	6.0	E	25	NW	SW	NW	252	152	6	X	02/13/98	0	434770.700	3902342.600	WATER PRODUCTION	RECTOR	
512336	22.0	N	6.0	E	25	NW	SW	NW	252	170	6	X	12/29/85	0	434770.700	3902342.600	WATER PRODUCTION	RECTOR,W	
512437	22.0	N	6.0	E	25	NW	SW	NW	197	0	8	X	09/25/85	0	434770.700	3902342.600	WATER PRODUCTION	RECTOR WALTER,	
593043	22.0	N	6.0	E	25	NW	SW	SW	180	122	6	X	08/22/02	10	434770.500	3902141.300	WATER PRODUCTION	BRIDGER	

ADWR 55-Files
Grenfield Land Development

Reg. No.	Town	North	Range	East	Sect.	Ac 160	Ac 40	Ac 10	Depth	DTW	Dia.	Log	Drilled	Rate	UTMX	UTMY	Well Use	Last Name	Company
587541	22.0	N	6.0	E	25	NW	SW	SE	0	0	0			0	434967.500	3902133.300	WATER PRODUCTION	BRIDGER	
587542	22.0	N	6.0	E	25	NW	SW	SE	0	0	0			0	434967.500	3902133.300	WATER PRODUCTION	BOYER	
593042	22.0	N	6.0	E	25	NW	SW	SE	200	121	6	X		0	434967.500	3902133.300	WATER PRODUCTION	BOYER	
512536	22.0	N	6.0	E	25	NW	SE	SW	150	50	6	X	10/20/85	0	435164.800	3902125.200	WATER PRODUCTION	BRIDGER	
562981	22.0	N	6.0	E	25	NW	SE	SE	242	122	5	X		0	435362.100	3902117.100	WATER PRODUCTION	KITKOWSKI	
630703	22.0	N	6.0	E	25	SW			0	0	0		07/01/65	0	435065.100	3901626.300	WATER PRODUCTION	PEARCE, ROBERT,C	
600511	22.0	N	6.0	E	25	SW	NE		320	290	6	N	07/10/75	10	435262.200	3901819.300	WATER PRODUCTION	BACHMANN,R	
601778	22.0	N	6.0	E	25	SW	NE	NW	258	170	5		09/16/64	10	435164.100	3901923.900	WATER PRODUCTION	FITZHUGH,L J	
630716	22.0	N	6.0	E	25	SW	SW		340	300	6		09/01/80	20	434868.000	3901432.800	WATER PRODUCTION	COKER,H J	
637413	22.0	N	6.0	E	25	SW	SW	SW	0	0	0			0	434769.600	3901336.000		BAYLESS,L K	
803012	22.0	N	6.0	E	25	SW	SE		0	0	0		12/31/50	0	435260.400	3901416.800	WATER PRODUCTION	COCONINO NATL FOREST,	
802913	22.0	N	6.0	E	25	SW	SE	NE	250	89	5		01/28/94	7	435359.200	3901513.400	WATER PRODUCTION	GOLIGHTLY,M M	
802912	22.0	N	6.0	E	25	SW	SE	NE	102	14	6		12/01/77	0	435359.200	3901513.400	WATER PRODUCTION	GOLIGHTLY, MICHAEL,	
523003	22.0	N	6.0	E	25	SW	SE	NE	76	48	6	X	02/03/89	10	435359.200	3901513.400	WATER PRODUCTION	MCBRIDE, HOWARD,	
626775	22.0	N	6.0	E	25	SW	SE	NW	61	34	6		10/30/79	20	435162.500	3901521.400	WATER PRODUCTION	BRADFIELD,A H	
802954	22.0	N	6.0	E	25	SW	SE	NW	60	60	8		01/01/71	0	435162.500	3901521.400	WATER PRODUCTION	CRAIG,T R	
802955	22.0	N	6.0	E	25	SW	SE	NW	70	60	8		10/01/73	21	435162.500	3901521.400	WATER PRODUCTION	CRAIG,T R	
529886	22.0	N	6.0	E	26	NE	NE	NE	0	0	0			0	434571.300	3902746.100	GEOTECHNICAL	INDUSTRIAL DIST. INC.	
510113	22.0	N	6.0	E	26	NE	NE	NE	220	140	8	X	06/14/85	6	434571.300	3902746.100	WATER PRODUCTION	BEBEE,B	
900591	22.0	N	6.0	E	26	NE	NE	SE	0	0	0			0	434571.200	3902544.800		CARTER	
558976	22.0	N	6.0	E	26	NE	NW	NE	210	83	6	X	10/04/96	0	434166.800	3902733.800	WATER PRODUCTION		3 S INVESTMENTS INC
558975	22.0	N	6.0	E	26	NE	NW	SE	0	0	0			0	434167.000	3902532.500	WATER PRODUCTION	BABBITT BROS TRADING,	
512261	22.0	N	6.0	E	26	NE	SW	NW	130	80	6	X	09/25/85	10	433965.100	3902325.000	WATER PRODUCTION	SWEIGART,E	
808437	22.0	N	6.0	E	26	NE	SW	NW	0	0	0			0	433965.100	3902325.000	WATER PRODUCTION	SUTTON	
535557	22.0	N	6.0	E	26	NE	SW	SW	107	64	7	X	05/20/93	0	433965.400	3902123.700	WATER PRODUCTION	WAGNER	
535558	22.0	N	6.0	E	26	NE	SW	SW	0	0	0			0	433965.400	3902123.700	WATER PRODUCTION	WAGNER, CHARLES,H	
647276	22.0	N	6.0	E	26	NE	SW	SW	100	0	6			25	433965.400	3902123.700	WATER PRODUCTION	QUARANTA,J P	
512373	22.0	N	6.0	E	26	NE	SW	SW	130	80	6	X	09/26/85	18	433965.400	3902123.700	WATER PRODUCTION	NEHER,M A	
646605	22.0	N	6.0	E	26	NW			220	0	6		01/01/79	35	433459.900	3902410.500	WATER PRODUCTION	DOWTIN,B	
620413	22.0	N	6.0	E	26	NW			30	7	18		09/02/72	30	433459.900	3902410.500	WATER PRODUCTION	KINSMAN,J J	
625728	22.0	N	6.0	E	26	NW	NE		188	82	7		06/07/75	108	433661.600	3902617.800	WATER PRODUCTION		AZ NORTH DEVELOPMENT INC
807487	22.0	N	6.0	E	26	NW	NE	NW	115	65	5		07/21/78	4	433560.300	3902715.300	WATER PRODUCTION	WAGNER FAMILY LTD,	
807488	22.0	N	6.0	E	26	NW	NE	NW	160	87	5		10/20/78	15	433560.300	3902715.300	WATER PRODUCTION	WAGNER FAMILY LTD,	
565466	22.0	N	6.0	E	26	NW	NE	NW	0	0	0			0	433560.300	3902715.300	WATER PRODUCTION	WAGNER	
807486	22.0	N	6.0	E	26	NW	NE	NW	115	115	5		10/09/78	5	433560.300	3902715.300	WATER PRODUCTION		WAGNER FAMILY LTD PARTNER
807489	22.0	N	6.0	E	26	NW	NE	NW	120	78	5		11/15/78	5	433560.300	3902715.300	WATER PRODUCTION	WAGNER FAMILY LTD,	
594077	22.0	N	6.0	E	26	NW	NE	NW	150	86	6	X	09/13/02	0	433560.300	3902715.300	WATER PRODUCTION		WAGNER FAMILY LTD PARTNER
512977	22.0	N	6.0	E	26	NW	NE	SW	130	80	6	X	05/21/86	10	433560.700	3902514.000	WATER PRODUCTION	WEAVER,C R	
579039	22.0	N	6.0	E	26	NW	NE	SW	172	89	6	X	06/08/00	0	433560.700	3902514.000	WATER PRODUCTION	LEUTHAUSER	
583134	22.0	N	6.0	E	26	NW	NE	SW	149	87	6	X	10/03/00	0	433560.700	3902514.000	WATER PRODUCTION	KERSHNER	
593817	22.0	N	6.0	E	26	NW	NE	SW	250	113	6	X		0	433560.700	3902514.000	WATER PRODUCTION	NANGHTON	
900129	22.0	N	6.0	E	26	NW	NE	SE	170	90	6	X		0	433762.800	3902520.200		STRAUB	
900410	22.0	N	6.0	E	26	NW	NE	SE	155	88	6	X		0	433762.800	3902520.200		KERSHNER	
516911	22.0	N	6.0	E	26	NW	NW	NW	0	0	0			0	433155.700	3902702.900	WATER PRODUCTION	ARIZONA M K ENT.,	
537282	22.0	N	6.0	E	26	NW	NW	NW	168	95	7	X	02/16/93	5	433155.700	3902702.900	WATER PRODUCTION	OGDEN, JERRY,	

Reg. No.	Town	North	Range	East	Sect.	Ac 160	Ac 40	Ac 10	Depth	DTW	Dia.	Log	Drilled	Rate	UTMX	UTMY	Well Use	Last Name	Company
546025	22.0	N	6.0	E	26	NW	NW	NW	132	72	7	X	12/16/94	0	433155.700	3902702.900	WATER PRODUCTION	PRESTON, KENNETH,R	
556197	22.0	N	6.0	E	26	NW	NW	NW	0	0	0			0	433155.700	3902702.900	WATER PRODUCTION	SCOTT, BEN,	
509491	22.0	N	6.0	E	26	NW	NW	NW	155	130	6	X	10/23/84	0	433155.700	3902702.900	WATER PRODUCTION	HERING,H D	
560448	22.0	N	6.0	E	26	NW	NW	NW	153	45	8	X	02/08/97	0	433155.700	3902702.900	WATER PRODUCTION	GESSE, TIM,	
571062	22.0	N	6.0	E	26	NW	NW	NW	150	82	6	X	01/13/99	10	433155.700	3902702.900	WATER PRODUCTION	GARY	
574813	22.0	N	6.0	E	26	NW	NW	NW	165	95	5	X	09/14/99	0	433155.700	3902702.900	WATER PRODUCTION	PERKINS	
592907	22.0	N	6.0	E	26	NW	NW	NW	0	0	0			0	433155.700	3902702.900	WATER PRODUCTION	MORALES	
529422	22.0	N	6.0	E	26	NW	NW	SW	200	150	0	X	11/30/90	18	433156.400	3902501.800	WATER PRODUCTION	DONAHUE, ROBERT,	
205170	22.0	N	6.0	E	26	NW	NW	SW	130	15	7	X		0	433156.400	3902501.800	WATER PRODUCTION	WEST	
567688	22.0	N	6.0	E	26	NW	NW	SE	150	63	8	X	08/22/98	0	433358.700	3902507.800	WATER PRODUCTION	SACHARA	
608396	22.0	N	6.0	E	26	NW	SW		155	63	6		12/15/72	35	433258.700	3902202.800	WATER PRODUCTION	HOWETH,M L	
608397	22.0	N	6.0	E	26	NW	SW		45	10	8		12/15/72	30	433258.700	3902202.800	WATER PRODUCTION	HOWETH,M L	
510747	22.0	N	6.0	E	26	NW	SW	NW	150	60	6	X	06/13/85	5	433157.400	3902300.300	WATER PRODUCTION	HICKS,J E	
528589	22.0	N	6.0	E	26	NW	SW	NW	123	73	8	X	04/25/91	7	433157.400	3902300.300	WATER PRODUCTION	WAGNER, CHARLES,	
569962	22.0	N	6.0	E	26	NW	SW	NW	163	68	6	X	01/15/99	0	433157.400	3902300.300	WATER PRODUCTION	GRANADE	
517151	22.0	N	6.0	E	26	NW	SW	SW	178	75	8	X	04/18/87	0	433158.200	3902099.000	WATER PRODUCTION	WINSE, LAWRENCE,	
641807	22.0	N	6.0	E	26	NW	SW	SW	100	0	9		01/01/69	0	433158.200	3902099.000	WATER PRODUCTION	MILLER,D	
562582	22.0	N	6.0	E	26	NW	SW	SW	155	80	8	X	06/30/97	0	433158.200	3902099.000	WATER PRODUCTION	WAGNER, CHARLES,	
587349	22.0	N	6.0	E	26	NW	SW	SW	170	92	6	X	08/01/01	0	433158.200	3902099.000	WATER PRODUCTION	COIL	
591995	22.0	N	6.0	E	26	NW	SW	SW	175	62	5	X		0	433158.200	3902099.000	WATER PRODUCTION	URIAS	
509459	22.0	N	6.0	E	26	NW	SW	SE	125	75	6	X	01/05/85	10	433359.800	3902105.200	WATER PRODUCTION	LAMBERT, RUTH,	
805278	22.0	N	6.0	E	26	NW	SE		250	56	0			27	433662.400	3902215.100	WATER PRODUCTION	FULGHAM, EARNEST,	
530251	22.0	N	6.0	E	26	NW	SE	NE	100	68	8	X	04/26/91	0	433763.200	3902318.900	WATER PRODUCTION	HOPKINS, RICHARD,	
901164	22.0	N	6.0	E	26	NW	SE	NW	0	0	0			0	433561.200	3902312.700		PATTERSON	
552798	22.0	N	6.0	E	26	NW	SE	SW	135	74	8	X	01/11/96	0	433561.700	3902111.300	WATER PRODUCTION	TOWNSEND, CONNIE,	
581266	22.0	N	6.0	E	26	NW	SE	SW	132	78	6	X	09/19/00	0	433561.700	3902111.300	WATER PRODUCTION	FISHER & ROBERTS	
643224	22.0	N	6.0	E	26	NW	SE	SE	200	190	6			15	433763.500	3902117.500	WATER PRODUCTION	ANAYA,F E	
647350	22.0	N	6.0	E	26	NW	SE	SE	190	170	5		02/24/80	10	433763.500	3902117.500	WATER PRODUCTION	MORGAN	
514115	22.0	N	6.0	E	26	SW	NE	NW	12	1	24	X	04/16/87	120	433562.100	3901910.100	WATER PRODUCTION	OLBERDING	
518309	22.0	N	6.0	E	26	SW	NE	NW	12	2	24	X	06/25/88	0	433562.100	3901910.100	WATER PRODUCTION	OLBERDING, ROBERT,C	
564222	22.0	N	6.0	E	26	SW	NE	NW	132	80	8	X		15	433562.100	3901910.100	WATER PRODUCTION	OLBERDING	
564789	22.0	N	6.0	E	26	SW	NE	SW	130	90	5	X		0	433562.600	3901708.800	WATER PRODUCTION	WOOD	
565769	22.0	N	6.0	E	26	SW	NE	SW	134	91	7	X	06/04/98	0	433562.600	3901708.800	WATER PRODUCTION	HUGHES	
522602	22.0	N	6.0	E	26	SW	NE	SW	14	58	24	X	09/16/89	0	433562.600	3901708.800	WATER PRODUCTION	OLBERDING, ROBERT,	
551176	22.0	N	6.0	E	26	SW	NE	SW	170	76	8	X	03/04/96	10	433562.600	3901708.800	WATER PRODUCTION	ACKLIN, SCOTT,	
900411	22.0	N	6.0	E	26	SW	NW	NE	195	82	6	X		0	433360.400	3901903.900		WALLACE	
534904	22.0	N	6.0	E	26	SW	NW	NW	200	127	6	X	05/15/92	0	433158.900	3901897.800	WATER PRODUCTION	NEWMAN, VERNE JR.,	
551460	22.0	N	6.0	E	26	SW	NW	NW	190	122	8	X	10/26/95	10	433158.900	3901897.800	WATER PRODUCTION	CONRAD, HOWARD,W	
202462	22.0	N	6.0	E	26	SW	NW	SW	200	96	6	X		0	433159.700	3901696.400	WATER PRODUCTION	GONZALEZ	
202328	22.0	N	6.0	E	26	SW	NW	SW	190	108	6	X		0	433159.700	3901696.400	WATER PRODUCTION	SCHANK	
204291	22.0	N	6.0	E	26	SW	NW	SW	250	116	6	X		0	433159.700	3901696.400	WATER PRODUCTION	LINDSAY	
523103	22.0	N	6.0	E	26	SW	NW	SE	0	0	0			0	433361.000	3901702.600	WATER PRODUCTION	PUGH, DAVID & M,	
647302	22.0	N	6.0	E	26	SW	SW		220	170	8		09/01/79	10	433261.600	3901397.500	WATER PRODUCTION	WALLACE,W E	
515429	22.0	N	6.0	E	26	SW	SW	NE	220	97	6	X	09/23/86	3	433361.600	3901501.300	WATER PRODUCTION	WOODHEAD, JIM,	
529015	22.0	N	6.0	E	26	SW	SW	NE	0	0	0			0	433361.600	3901501.300	WATER PRODUCTION	KELCH, RUSSELL,A	

ADWR 55-Files
Grenfield Land Development

Reg. No.	Town	North	Range	East	Sect.	Ac 160	Ac 40	Ac 10	Depth	DTW	Dia.	Log	Drilled	Rate	UTMX	UTMY	Well Use	Last Name	Company
533126	22.0	N	6.0	E	26	SW	SW	NE	370	0	0	X	11/23/91	0	433361.600	3901501.300	WATER PRODUCTION	KELCH, RUSSELL,A	
533883	22.0	N	6.0	E	26	SW	SW	NE	86	63	6	X	12/17/91	0	433361.600	3901501.300	WATER PRODUCTION	KELCH, RUSSELL,A	
650780	22.0	N	6.0	E	26	SW	SW	NE	320	0	0		01/01/50	0	433361.600	3901501.300	WATER PRODUCTION	SAPP, MARK & DONNA,	
523527	22.0	N	6.0	E	26	SW	SW	NE	210	0	5	X		3	433361.600	3901501.300	WATER PRODUCTION	WOODHEAD, JIM,	
900593	22.0	N	6.0	E	26	SW	SW	NE	0	0	0			0	433361.600	3901501.300		GREENE	
515228	22.0	N	6.0	E	26	SW	SW	NW	225	0	6	X	09/15/86	0	433160.500	3901495.200	WATER PRODUCTION	SHANKS, GERALD,	
578393	22.0	N	6.0	E	26	SW	SW	NW	170	63	6	X	02/10/00	0	433160.500	3901495.200	WATER PRODUCTION	PEARSON	
541377	22.0	N	6.0	E	26	SW	SW	SW	99	0	7	X	05/28/94	0	433161.200	3901293.800	WATER PRODUCTION	COWLES, BILL,	
544204	22.0	N	6.0	E	26	SW	SW	SW	0	0	0			0	433161.200	3901293.800	WATER PRODUCTION	COWLES, BILL,	
544337	22.0	N	6.0	E	26	SW	SW	SW	90	68	7		09/28/94	0	433161.200	3901293.800	WATER PRODUCTION	COWLES	
553842	22.0	N	6.0	E	26	SW	SW	SW	0	0	0			0	433161.200	3901293.800	WATER PRODUCTION	COWLES, BILL,	
562421	22.0	N	6.0	E	26	SW	SW	SW	250	170	7	X		5	433161.200	3901293.800	WATER PRODUCTION	COWLES	
592600	22.0	N	6.0	E	26	SW	SW	SW	300	0	8	X		0	433161.200	3901293.800	WATER PRODUCTION	AMBLER	
594043	22.0	N	6.0	E	26	SW	SW	SW	0	0	0			0	433161.200	3901293.800	WATER PRODUCTION	AMBLER	
900737	22.0	N	6.0	E	26	SW	SW	SW	0	0	0			0	433161.200	3901293.800		AMBLER	
512307	22.0	N	6.0	E	26	SW	SW	SE	225	125	6	X	05/23/86	0	433362.200	3901299.900	WATER PRODUCTION	PATTERSON, ROBERT,	
516619	22.0	N	6.0	E	26	SW	SW	SE	0	0	0			0	433362.200	3901299.900	WATER PRODUCTION	KELCH, RUSSELL,H	
502971	22.0	N	6.0	E	26	SW	SE	NE	303	104	7	X	08/01/82	0	433764.600	3901513.600	WATER PRODUCTION	BLANN, JOHN,	
512244	22.0	N	6.0	E	26	SW	SE	NW	302	0	6	X	10/17/85	6	433563.100	3901507.400	ABANDONED	PLAIN,G E	
513384	22.0	N	6.0	E	26	SW	SE	NW	142	56	4	X	10/26/85	0	433563.100	3901507.400	WATER PRODUCTION	PLAIN, GLENN,E	
506725	22.0	N	6.0	E	26	SW	SE	SW	125	91	6	X	11/15/83	10	433563.600	3901306.100	WATER PRODUCTION	BAILEY ET AL,J	
546297	22.0	N	6.0	E	26	SW	SE	SE	0	0	0			0	433764.900	3901312.200	WATER PRODUCTION	PIRSHAFIEY,N	
800078	22.0	N	6.0	E	26	SE			135	95	6		01/01/72	4	434268.700	3901629.800	WATER PRODUCTION	GOSS,H T	
515034	22.0	N	6.0	E	26	SE	NE	SW	130	98	6	X	08/18/86	10	434369.100	3901733.400	WATER PRODUCTION	MANUELL, DENNIS,	
901307	22.0	N	6.0	E	26	SE	NE	SE	0	0	0			0	434571.100	3901739.500		BROEREN	
500323	22.0	N	6.0	E	26	SE	NW	SE	100	80	0	X	01/01/81	20	434167.500	3901727.200	WATER PRODUCTION	MORGAN,R	
507402	22.0	N	6.0	E	26	SE	NW	SE	150	80	7	X	06/04/84	4	434167.500	3901727.200	WATER PRODUCTION	HAZLEHURST,W M	
518148	22.0	N	6.0	E	26	SE	SW	NE	0	0	0			0	434167.600	3901525.900	WATER PRODUCTION	JOHNSON,A W	
521408	22.0	N	6.0	E	26	SE	SW	NW	140	86	8	X	06/15/88	5	433966.100	3901519.800	WATER PRODUCTION	POINDEXTER, JONATHAN,	
532693	22.0	N	6.0	E	26	SE	SW	NW	0	0	0			0	433966.100	3901519.800	WATER PRODUCTION	JOHNSON,,H W	
536854	22.0	N	6.0	E	26	SE	SW	NW	160	128	6	X	10/26/92	0	433966.100	3901519.800	WATER PRODUCTION	JOHNSON, N.W.,	
500347	22.0	N	6.0	E	26	SE	SW	NW	260	135	6	X	08/10/81	5	433966.100	3901519.800	WATER PRODUCTION	ST MARTIN JR,J M	
511663	22.0	N	6.0	E	26	SE	SW	NW	147	50	6	X	07/11/85	15	433966.100	3901519.800	WATER PRODUCTION	SLEBODNICK	
565234	22.0	N	6.0	E	26	SE	SW	NW	160	126	8	X		0	433966.100	3901519.800	WATER PRODUCTION	DALGETTY	
564819	22.0	N	6.0	E	26	SE	SW	SE	0	0	0			0	434167.800	3901324.600		LEE	
565777	22.0	N	6.0	E	26	SE	SW	SE	150	122	8	X	07/16/98	0	434167.800	3901324.600	WATER PRODUCTION	LEE	
512258	22.0	N	6.0	E	26	SE	SE	NE	300	0	8	X	10/28/85	0	434571.100	3901538.200	WATER PRODUCTION	NESS,J	
599568	22.0	N	6.0	E	26	SE	SE	NE	260	139	6	X	10/16/03	0	434571.100	3901538.200	WATER PRODUCTION		FOGELSON CONSTRUCTION CO
511413	22.0	N	6.0	E	26	SE	SE	NE	150	0	6	X	10/30/85	0	434571.100	3901538.200	WATER PRODUCTION	DESNOYER,E R	
651015	22.0	N	6.0	E	26	SE	SE	NE	190	190	5			10	434571.100	3901538.200	WATER PRODUCTION	TAYLOR, JAMES &,	
544501	22.0	N	6.0	E	26	SE	SE	NE	135	112	8	X	09/02/94	14	434571.100	3901538.200	WATER PRODUCTION	DESNOYER, ERNEST,R	
511378	22.0	N	6.0	E	26	SE	SE	NW	0	0	0			0	434369.200	3901532.100	WATER PRODUCTION	WOOD,W W	
650724	22.0	N	6.0	E	26	SE	SE	NW	140	0	6		07/24/79	4	434369.200	3901532.100	WATER PRODUCTION	DRUCKER,F	
506359	22.0	N	6.0	E	26	SE	SE	SW	126	75	6	X	06/25/84	5	434369.200	3901330.700	WATER PRODUCTION	SAVAGE,J	
505467	22.0	N	6.0	E	26	SE	SE	SW	300	165	6	X	09/13/83	3	434369.200	3901330.700	WATER PRODUCTION	ARMSTRONG, JOSEPH,R	

Reg. No.	Town	North	Range	East	Sect.	Ac 160	Ac 40	Ac 10	Depth	DTW	Dia.	Log	Drilled	Rate	UTMX	UTMY	Well Use	Last Name	Company
506360	22.0	N	6.0	E	26	SE	SE	SW	150	101	6	X	12/22/83	12	434369.200	3901330.700	WATER PRODUCTION	ALEXANDER,R S	
509631	22.0	N	6.0	E	26	SE	SE	SW	175	120	6	X	12/09/85	6	434369.200	3901330.700	WATER PRODUCTION	SCHWINGHAMER,B	
511247	22.0	N	6.0	E	26	SE	SE	SW	175	0	5	X	10/31/85	0	434369.200	3901330.700	WATER PRODUCTION	DELICH,J	
580280	22.0	N	6.0	E	26	SE	SE	SW	0	0	0			0	434369.200	3901330.700	WATER PRODUCTION	RICE	
587090	22.0	N	6.0	E	26	SE	SE	SW	150	72	6	X	07/14/01	0	434369.200	3901330.700	WATER PRODUCTION	RICE	
514290	22.0	N	6.0	E	26	SE	SE	SE	140	0	8	X	08/01/86	8	434571.000	3901336.800	ABANDONED	RING, MARGARET,	
546583	22.0	N	6.0	E	26	SE	SE	SE	0	0	0			0	434571.000	3901336.800	WATER PRODUCTION	THEW, JR., WESTON,	
564326	22.0	N	6.0	E	26	SE	SE	SE	148	141	6	X		0	434571.000	3901336.800	WATER PRODUCTION	BAROTZ & ROBINSON	
600629	22.0	N	6.0	E	26	SE	SE	SE	325	0	8	N		0	434571.000	3901336.800	WATER PRODUCTION	PETERSON,R A	
601303	22.0	N	6.0	E	26	SE	SE	SE	325	0	8			20	434571.000	3901336.800	WATER PRODUCTION	EDGE, ROBERT II,	
504176	22.0	N	6.0	E	26	SE	SE	SE	151	100	6	X	11/01/82	12	434571.000	3901336.800	WATER PRODUCTION	DOSKOCIL,J	
515112	22.0	N	6.0	E	26	SE	SE	SE	150	138	6	X	08/10/86	10	434571.000	3901336.800	WATER PRODUCTION	RING	
572930	22.0	N	6.0	E	26	SE	SE	SE	0	0	0			0	434571.000	3901336.800	WATER PRODUCTION	COYLE	
644444	22.0	N	6.0	E	27				100	0	6		01/01/64	0	432244.600	3901995.200	WATER PRODUCTION	RODDY ET AL,D J	
646819	22.0	N	6.0	E	27				60	35	6		10/01/68	5	432244.600	3901995.200		DODD,T	
631487	22.0	N	6.0	E	27	NE			92	35	8		05/01/69	12	432650.800	3902398.900	WATER PRODUCTION	DODD,C	
570379	22.0	N	6.0	E	27	NE	NW	NE	110	56	6	X	09/18/98	0	432549.000	3902702.000	WATER PRODUCTION		USDA - FOREST SERVICE
593771	22.0	N	6.0	E	27	NE	SW	SW	185	60	6	X	09/20/02	0	432347.800	3902097.100	WATER PRODUCTION		WING PARTNERS
582863	22.0	N	6.0	E	27	NE	SW	SW	130	72	5	X	09/12/00	0	432347.800	3902097.100	WATER PRODUCTION		WING PARTNERS
593772	22.0	N	6.0	E	27	NE	SW	SE	200	67	6	X	09/25/02	0	432550.700	3902096.800	WATER PRODUCTION		WING PARTNERS
808403	22.0	N	6.0	E	27	NE	SW	SE	185	126	4	X		0	432550.700	3902096.800	WATER PRODUCTION	SPAULDING	
900404	22.0	N	6.0	E	27	NE	SW	SE	200	84	6	X	07/02/04	10	432550.700	3902096.800			WING PARTNERS
900405	22.0	N	6.0	E	27	NE	SW	SE	167	82	6	X	08/02/04	10	432550.700	3902096.800		ECKHART	
534970	22.0	N	6.0	E	27	NE	SE	NE	160	70	8	X	06/16/92	10	432955.400	3902297.400	WATER PRODUCTION	MCGLAMERY, MATTHEW,	
530794	22.0	N	6.0	E	27	NE	SE	NW	165	122	8	X	02/20/91	10	432752.900	3902298.000	WATER PRODUCTION	SCRIBNER, WILLIAM,	
900130	22.0	N	6.0	E	27	NE	SE	NW	195	72	6	X		0	432752.900	3902298.000			WING PARTNERS
540747	22.0	N	6.0	E	27	NE	SE	SW	160	54	6	X	10/27/93	0	432753.700	3902096.400	WATER PRODUCTION	BOYLE	
803024	22.0	N	6.0	E	27	NE	SE	SW	60	35	6		10/01/68	5	432753.700	3902096.400	WATER PRODUCTION	DAVIS	
574500	22.0	N	6.0	E	27	NE	SE	SW	30	0	2	X	10/19/99	0	432753.700	3902096.400	WATER PRODUCTION		WING PARTNERS/ KIT TIEDEM
582864	22.0	N	6.0	E	27	NE	SE	SW	203	62	5	X	10/13/00	0	432753.700	3902096.400	WATER PRODUCTION	WILBUR	
586869	22.0	N	6.0	E	27	NE	SE	SW	170	90	5	X		0	432753.700	3902096.400	WATER PRODUCTION	DAVIS	
588837	22.0	N	6.0	E	27	NE	SE	SW	200	66	5	X	10/31/01	0	432753.700	3902096.400	WATER PRODUCTION		WING PARTNERS
529389	22.0	N	6.0	E	27	NE	SE	SE	163	35	7	X	10/05/90	0	432956.300	3902096.100	WATER PRODUCTION		WING PARTNERS
534434	22.0	N	6.0	E	27	NE	SE	SE	150	70	8	X	06/11/92	12	432956.300	3902096.100	WATER PRODUCTION	WAITE, STEVE,	
537256	22.0	N	6.0	E	27	NE	SE	SE	180	85	8	X	12/10/92	10	432956.300	3902096.100	WATER PRODUCTION	THOEMMES, GEORGE,	
590877	22.0	N	6.0	E	27	NE	SE	SE	192	78	6	X		0	432956.300	3902096.100	WATER PRODUCTION	PATTERSON	
599843	22.0	N	6.0	E	27	NE	SE	SE	190	70	6	X		0	432956.300	3902096.100	WATER PRODUCTION		WING PARTNERS
599883	22.0	N	6.0	E	27	NE	SE	SE	200	78	5	X	12/30/03	0	432956.300	3902096.100	WATER PRODUCTION	BOROWSKY	
201860	22.0	N	6.0	E	27	NE	SE	SE	250	0	8	X		0	432956.300	3902096.100	WATER PRODUCTION	BAUER	
531169	22.0	N	6.0	E	27	SW	NE	NE	130	45	8	X	05/28/91	0	432145.000	3901895.400	WATER PRODUCTION	THURSTON, CHRIS,R	
533609	22.0	N	6.0	E	27	SW	NW	NW	0	0	0			0	431535.000	3901895.900	WATER PRODUCTION	ZELENKA, JERRY,L	
537265	22.0	N	6.0	E	27	SW	NW	NW	200	74	8	X	11/20/92	10	431535.000	3901895.900	WATER PRODUCTION	ZELENKA, JERRY,L	
502056	22.0	N	6.0	E	27	SW	SW	NE	230	208	6	X	02/20/82	5	431738.200	3901490.900	WATER PRODUCTION	BAKER JR,T G	
523507	22.0	N	6.0	E	27	SW	SW	NW	150	61	6	X	03/20/89	10	431533.800	3901490.600	WATER PRODUCTION	SURAWICZ, BORYS,	
616772	22.0	N	6.0	E	27	SW	SW	NW	212	0	6		01/01/77	14	431533.800	3901490.600	WATER PRODUCTION	THUNDERHEAD RANCHES,	

ADWR 55-Files
Grenfield Land Development

Reg. No.	Town	North	Range	East	Sect.	Ac 160	Ac 40	Ac 10	Depth	DTW	Dia.	Log	Drilled	Rate	UTMX	UTMY	Well Use	Last Name	Company
084999	22.0	N	6.0	E	27	SW	SW	SW	130	99	7		06/05/80	2	431533.300	3901288.100	WATER PRODUCTION	HANSEN,R L	
507657	22.0	N	6.0	E	27	SW	SW	SW	100	29	8	X	05/23/84	0	431533.300	3901288.100	WATER PRODUCTION	HANSEN,B	
523155	22.0	N	6.0	E	27	SW	SW	SW	100	18	6	X	02/03/89	10	431533.300	3901288.100	WATER PRODUCTION	AHN, CHRIS & M,	
514901	22.0	N	6.0	E	27	SW	SW	SE	100	40	6	X	07/14/86	8	431738.000	3901288.400	WATER PRODUCTION	MAGUTH, MICHAEL,F	
514664	22.0	N	6.0	E	27	SW	SW	SE	160	0	0	X	07/05/86	0	431738.000	3901288.400	WATER PRODUCTION	MAGUTH, MICHAEL,F	
532149	22.0	N	6.0	E	27	SW	SE	NE	110	77	8	X	06/05/92	10	432145.300	3901491.200	WATER PRODUCTION	BOWEN, SCOTT,	
650571	22.0	N	6.0	E	27	SW	SE	NE	138	120	6		10/01/70	5	432145.300	3901491.200	WATER PRODUCTION	TUCKER,E A	
623343	22.0	N	6.0	E	27	SW	SE	NW	244	0	0			0	431941.800	3901491.100	WATER PRODUCTION	GRIFFEN,W B	
525017	22.0	N	6.0	E	27	SW	SE	SW	242	200	6	X	06/28/89	0	431941.700	3901288.800	WATER PRODUCTION	SAUNDERS	
641822	22.0	N	6.0	E	27	SW	SE	SW	205	175	8		04/09/79	6	431941.700	3901288.800	WATER PRODUCTION	THACHER,W W	
526245	22.0	N	6.0	E	27	SW	SE	SW	238	230	6	X	11/15/89	0	431941.700	3901288.800	WATER PRODUCTION	BADER, LOUIS,R	
524597	22.0	N	6.0	E	27	SW	SE	SE	125	75	6	X	06/20/89	0	432145.500	3901289.100	WATER PRODUCTION	HALLAS, ANTHONY,	
646230	22.0	N	6.0	E	27	SE			200	0	0		01/01/67	12	432653.100	3901592.300	WATER PRODUCTION	SHELDEN,J L	
800701	22.0	N	6.0	E	27	SE			0	0	0			0	432653.100	3901592.300	WATER PRODUCTION	BUCKEYE,R D	
203092	22.0	N	6.0	E	27	SE	NE	NE	250	130	6	X		0	432957.200	3901894.600	WATER PRODUCTION	THOMPSON	
087825	22.0	N	6.0	E	27	SE	NE	NW	158	66	6		08/28/81	0	432754.500	3901894.800	WATER PRODUCTION	SWEIG,F	
550710	22.0	N	6.0	E	27	SE	NE	NW	200	69	8	X	08/19/95	10	432754.500	3901894.800	WATER PRODUCTION	WALLINGFORD, KENNETH,	
561521	22.0	N	6.0	E	27	SE	NE	NW	173	68	6	X	06/04/97	0	432754.500	3901894.800	WATER PRODUCTION	EPPS, RICKEY,	
574499	22.0	N	6.0	E	27	SE	NE	NW	30	12	2	X	10/19/99	0	432754.500	3901894.800	WATER PRODUCTION		
561294	22.0	N	6.0	E	27	SE	NE	SW	300	78	5	X	06/12/97	0	432755.300	3901693.200	WATER PRODUCTION	STUNTZ, MICHAEL,E	WING PARTNERS/ KIT TIEDEM
574501	22.0	N	6.0	E	27	SE	NE	SW	30	0	2	X	10/19/99	0	432755.300	3901693.200	WATER PRODUCTION		
583368	22.0	N	6.0	E	27	SE	NE	SW	193	96	5	X	11/26/00	0	432755.300	3901693.200	WATER PRODUCTION	CROWLEY	WING PARTNERS/ KIT TIEDEM
558273	22.0	N	6.0	E	27	SE	NE	SE	300	212	8	X	11/20/96	0	432958.000	3901693.200	WATER PRODUCTION		
562858	22.0	N	6.0	E	27	SE	NE	SE	270	0	8	X	08/21/97	0	432958.000	3901693.200	WATER PRODUCTION		WING PARTNERS
562920	22.0	N	6.0	E	27	SE	NE	SE	210	163	6	X	05/04/00	0	432958.000	3901693.200	WATER PRODUCTION	DREAM CATCHERS BLDRS,	
564987	22.0	N	6.0	E	27	SE	NE	SE	175	128	6	X		0	432958.000	3901693.200	WATER PRODUCTION	FARRELL	
555735	22.0	N	6.0	E	27	SE	NE	SE	190	110	6	X	07/16/96	0	432958.000	3901693.200	WATER PRODUCTION		DREAM CATCHER BUILDERS
559660	22.0	N	6.0	E	27	SE	NE	SE	250	197	6	X	10/18/96	0	432958.000	3901693.200	WATER PRODUCTION	HAMILTON	
578658	22.0	N	6.0	E	27	SE	NE	SE	206	93	6	X	05/09/00	0	432958.000	3901693.200	WATER PRODUCTION	KARSAI, FRANK JR,	
599104	22.0	N	6.0	E	27	SE	NE	SE	190	90	6	X	11/06/03	10	432958.000	3901693.200	WATER PRODUCTION	BOURDAGE	
900592	22.0	N	6.0	E	27	SE	NE	SE	575	0	8	X		0	432958.000	3901693.200		BROOKSHIRE	
900776	22.0	N	6.0	E	27	SE	NE	SE	0	0	0			0	432958.000	3901693.200		CARLSON	
601715	22.0	N	6.0	E	27	SE	NW		225	75	6		10/01/68	30	432449.900	3901794.100	WATER PRODUCTION	CARLSON	
630287	22.0	N	6.0	E	27	SE	NW		22	12	60		01/01/20	15	432449.900	3901794.100	WATER PRODUCTION	TIEDEMANN,C G	
501605	22.0	N	6.0	E	27	SE	NW	SW	165	65	5	X	01/01/81	0	432348.500	3901693.300	WATER PRODUCTION	TIEDEMANN,C G	
900636	22.0	N	6.0	E	27	SE	NW	SE	0	0	0	X		0	432551.900	3901693.300		GALL,P A	
806802	22.0	N	6.0	E	27	SE	SW		0	0	0		12/31/64	30	432450.900	3901390.400	WATER PRODUCTION	TONGEN	
521817	22.0	N	6.0	E	27	SE	SW	NE	101	58	6	X	08/28/88	18	432552.400	3901491.500	WATER PRODUCTION	REEDER, GARY,	
645150	22.0	N	6.0	E	27	SE	SW	NE	80	0	6			0	432552.400	3901491.500	WATER PRODUCTION	BRUMMER, LARRY,	
651005	22.0	N	6.0	E	27	SE	SW	NE	0	0	6			20	432552.400	3901491.500	WATER PRODUCTION	BAUER,D P	
560486	22.0	N	6.0	E	27	SE	SW	NE	220	162	6	X	05/20/97	0	432552.400	3901491.500	WATER PRODUCTION	SNOOK	
808596	22.0	N	6.0	E	27	SE	SW	NE	240	0	6		11/27/76	0	432552.400	3901491.500	WATER PRODUCTION	BRUMMER, LARRY,	
647022	22.0	N	6.0	E	27	SE	SW	NW	60	0	0			0	432348.900	3901491.300	WATER PRODUCTION	HILL	
528846	22.0	N	6.0	E	27	SE	SW	SW	270	125	8	X	10/25/90	0	432349.300	3901289.400	ABANDONED	DIEGEL	
507596	22.0	N	6.0	E	27	SE	SW	SW	100	30	6	X	03/23/84	15	432349.300	3901289.400	WATER PRODUCTION	ROZELLE, JON,	
																		BAREFIELD	

ADWR 55-Files
Grenfield Land Development

Reg. No.	Town	North	Range	East	Sect.	Ac 160	Ac 40	Ac 10	Depth	DTW	Dia.	Log	Drilled	Rate	UTMX	UTMY	Well Use	Last Name	Company
530034	22.0	N	6.0	E	27	SE	SW	SW	200	65	6	X	10/31/90	0	432349.300	3901289.400	WATER PRODUCTION	SCHULTZ	
576524	22.0	N	6.0	E	27	SE	SW	SE	510	0	7	X	09/12/99	0	432553.000	3901289.800	WATER PRODUCTION	DEAN	
556190	22.0	N	6.0	E	27	SE	SE	NE	310	230	7	X	11/18/96	0	432958.900	3901491.800	WATER PRODUCTION	LASKARIS, JACK,	
508464	22.0	N	6.0	E	27	SE	SE	NW	100	70	6	X	07/11/84	10	432756.000	3901491.600	WATER PRODUCTION	HOWELL,G	
508265	22.0	N	6.0	E	27	SE	SE	NW	90	30	6	X	06/06/84	10	432756.000	3901491.600	WATER PRODUCTION	BRIDGMAN,H	
508470	22.0	N	6.0	E	27	SE	SE	NW	200	0	0	X	07/10/84	0	432756.000	3901491.600	ABANDONED	GROTH, LAWRENCE,	
508518	22.0	N	6.0	E	27	SE	SE	NW	220	0	0	X	07/18/84	0	432756.000	3901491.600	ABANDONED	GROTH, LAWRENCE,	
509040	22.0	N	6.0	E	27	SE	SE	NW	100	130	6	X	09/22/84	5	432756.000	3901491.600	WATER PRODUCTION	GROTH, LAWRENCE,	
512245	22.0	N	6.0	E	27	SE	SE	NW	225	218	6	X	10/18/85	0	432756.000	3901491.600	WATER PRODUCTION	GROTH, LAWRENCE,	
525244	22.0	N	6.0	E	27	SE	SE	NW	211	200	6	X	11/22/89	0	432756.000	3901491.600	WATER PRODUCTION	GROTH, LARRY,	
577214	22.0	N	6.0	E	27	SE	SE	NW	177	146	4	X	10/24/99	0	432756.000	3901491.600	WATER PRODUCTION		
900528	22.0	N	6.0	E	27	SE	SE	NW	120	56	6	X		0	432756.000	3901491.600			DREAM CATCHER BUILDERS
580276	22.0	N	6.0	E	27	SE	SE	SW	0	0	0			0	432756.800	3901290.100	WATER PRODUCTION	STALKER	
586808	22.0	N	6.0	E	27	SE	SE	SW	256	0	5	X	07/27/01	0	432756.800	3901290.100	WATER PRODUCTION	MORAN	
565673	22.0	N	6.0	E	27	SE	SE	SE	500	0	8	X	07/24/98	0	432959.800	3901290.400	WATER PRODUCTION	MORAN	
900416	22.0	N	6.0	E	27	SE	SE	SE	225	197	5	X		0	432959.800	3901290.400		JEROME	
900418	22.0	N	6.0	E	27	SE	SE	SE	172	96	6	X		0	432959.800	3901290.400		PACKARD	
598738	22.0	N	6.0	E	28	SW	SE	NW	500	460	6	X		0	430307.400	3901510.200	WATER PRODUCTION	PACKARD	
632175	22.0	N	6.0	E	28	SE			32	24	0			30	431024.900	3901597.800	WATER PRODUCTION	OLIVAS	
576052	22.0	N	6.0	E	28	SE	NE	NE	0	0	0			0	431331.900	3901897.000		VEAZEY,E B	
576131	22.0	N	6.0	E	28	SE	NE	NE	154	52	5	X	11/05/99	0	431331.900	3901897.000		MCKENNA	
590971	22.0	N	6.0	E	28	SE	NE	NW	394	290	5	X	06/28/02	0	431128.800	3901898.800	WATER PRODUCTION	MCKENNA	
572437	22.0	N	6.0	E	28	SE	NW	NE	503	298	5	X	03/04/99	10	430924.700	3901900.600	WATER PRODUCTION	MERKEL	
572438	22.0	N	6.0	E	28	SE	NW	SE	0	0	0			0	430923.300	3901700.100	WATER PRODUCTION	JOHNSON	
592908	22.0	N	6.0	E	28	SE	SW	SE	600	0	0	X		0	430920.700	3901298.900	WATER PRODUCTION	HANNA	
540609	22.0	N	6.0	E	28	SE	SE	NW	385	0	7	X	06/30/94	0	431126.900	3901495.900	WATER PRODUCTION		BEVERAGE FAMILY TRUST
546047	22.0	N	6.0	E	28	SE	SE	NW	153	0	6	X		0	431126.900	3901495.900	WATER PRODUCTION	ROMERO, SUZANNE,	
577946	22.0	N	6.0	E	28	SE	SE	NW	0	0	0			0	431126.900	3901495.900	WATER PRODUCTION	ROMERO, SUZANNE,	
532722	22.0	N	6.0	E	28	SE	SE	SW	360	270	6	X	11/14/91	0	431126.000	3901294.500	WATER PRODUCTION	GOODRIDGE	
514449	22.0	N	6.0	E	28	SE	SE	SE	0	0	0			0	431329.800	3901290.200	WATER PRODUCTION	YEE	
627303	22.0	N	6.0	E	31	SE	NW		0	0	0			0	427584.200	3900162.500	WATER PRODUCTION	VEAZEY, ROBERT,	
632179	22.0	N	6.0	E	34	NE			24	0	0			15	432647.700	3900789.600	WATER PRODUCTION	COCONINO NATL FOREST,	
203138	22.0	N	6.0	E	34	NE	SE	SE	0	0	0			0	432948.800	3900489.800	WATER PRODUCTION	VEAZEY,E B	
203832	22.0	N	6.0	E	34	NE	SE	SE	0	0	0			0	432948.800	3900489.800	WATER PRODUCTION	DOTEN	
632178	22.0	N	6.0	E	34	NW			12	6	0			30	431832.400	3900788.700	WATER PRODUCTION	DOTEN	
525072	22.0	N	6.0	E	34	NW	SW	NE	290	160	8	X	10/02/89	5	431728.800	3900688.900	WATER PRODUCTION	VEAZEY,E B	
900958	22.0	N	6.0	E	34	NW	SW	NW	0	0	0			0	431525.000	3900688.800		ROZELLE, JON,	
593773	22.0	N	6.0	E	34	NW	SE	SE	250	190	6	X	12/20/02	0	432133.500	3900489.700	WATER PRODUCTION		ROSE WEST LLC
546069	22.0	N	6.0	E	34	SW	SW	NW	475	380	8	X	12/14/94	5	431513.300	3899891.800	WATER PRODUCTION	FRENCH	
631410	22.0	N	6.0	E	34	SE			45	25	0			0	432635.600	3899990.300	WATER PRODUCTION	HANNA, FRANK,	
580901	22.0	N	6.0	E	36				0	0	0			0	435443.500	3900394.100		VEAZEY,E B	
512289	22.0	N	6.0	E	36	NE	SE	SE	165	105	8	X	03/05/86	0	436143.100	3900481.200	WATER PRODUCTION	SMITH	
595023	22.0	N	6.0	E	36	NW	SW	SE	184	144	5	X	03/14/03	0	434956.100	3900509.300	WATER PRODUCTION	OLSEN,B	
506035	22.0	N	6.0	E	36	SE	NW	SW	155	140	8	X	09/02/83	10	435546.900	3900090.900	WATER PRODUCTION	RUFF	
528847	22.0	N	6.0	E	36	SE	NW	SE	0	0	0			0	435745.800	3900088.000	WATER PRODUCTION	MOODY TRUSTEE	
																		BRYANT, L MARSHALL,	

ADWR 55-Files
Grenfield Land Development

Reg. No.	Town	North	Range	East	Sect.	Ac 160	Ac 40	Ac 10	Depth	DTW	Dia.	Log	Drilled	Rate	UTMX	UTMY	Well Use	Last Name	Company
569765	22.0	N	6.0	E	36	SE	SW	NE	162	148	5	X	01/22/99	0	435744.700	3899886.700	WATER PRODUCTION	DIPPOLD AND LASICH	
543025	22.0	N	6.0	E	36	SE	SW	SW	220	0	0	X	06/07/94	0	435543.800	3899686.400	WATER PRODUCTION	MOGK, NEAL & LAURA,	
544263	22.0	N	6.0	E	36	SE	SW	SW	173	150	5	X	07/20/94	0	435543.800	3899686.400	WATER PRODUCTION	MOGK, NEAL,	
546103	22.0	N	6.0	E	36	SE	SW	SE	0	0	0			0	435743.700	3899685.400	WATER PRODUCTION	YARD,M	
518177	22.0	N	6.0	E	36	SE	SE	SE	0	0	0			0	436141.600	3899683.400	WATER PRODUCTION	JOHNSON, ROBERT,	
520475	22.0	N	6.0	E	36	SE	SE	SE	190	123	8	X	07/25/88	10	436141.600	3899683.400	WATER PRODUCTION	BRYANT, J. MARSHALL,	

F

Appendix F

Lithologic Log Deep Well 4

HSI
FIELD LOG

[1]Well No.: Deep Well 4	[2]Location: Bellemont, Az	[3]Drilling Co.: ADT	[4]Hole Diameter: 10-inch	[5]Total Depth:	
[6]Project Number: 05-400	[7]Drilling Method: Dual Rotary	[8]Drilling Started: 5/7/05	[9]Drilling Completed: 8/18/05	[10]GPS: (lat) 35° 13' 45.034" (long) 111° 48' 9.472" (datum) NAD 27	
[11]GW Measured at: 1,675	[12]Other Logs:	[13]Elevation: 7150	[14]Geologist: Steve Skotnicki	[15]Lab:	

[16]Depth (Feet bls)		[17]Cadastral: A(21-6)6cba								[21]HCL Reaction					[24]Clasts (coarse-grained)						[25]Thickness of Unit
		[18]Percent of Sample													Shape			Sorting			
From	To	Gravel	Sand: Coarse	Sand: Medium	Sand: Fine	Silt	Clay	[19]Color (Kleinfelder)	[20] Sample Description	None	Weak	Strong	[22]Cement Type	[23]Rock Type	Angular	Sub-angular	Rounded	Well Sorted	Moderately Sorted	Poorly Sorted	
0	10			x	x	x	x		Tightly bound dirt clots: organic matter, minor sand	x			cl	ss					x		10
10	20		x	x	x	x			Fewer rines and more coarse sand (volc.)	x				ss						x	10
20	30		x	x	x	x	x		Fines dominate (both silt & clay), with some med- and coarse sand	x			cl	ss						x	10
30	90					x	x		Dominantly silt & clay; very sparse sand; tan colored	x			cl	ms							60
90	120					x	x		Same as 30-90 but red-brn color bet 90-100	x			cl	ms							30
120	140		x	x	x	x	x		Mostly fines, buth with visible med-to coarse sand	x			cl	ms							20
140	145	x	x						Well sorted gravel w/coarse sand. Mostly basalt clasts, possibly some dacite	x				cong			x	x			5
145	155	x	x						Mostly coarse basaltic sand; minor gravel clasts	x				ss		x			x		10
155	175	x	x						About equal parts coarse sand and gravel; basalt clasts	x				ss		x			x		20
175	180	x	x			x	x		Sand and gravel coated w/silt and clay; basalt clasts	x			cl	cong		x				x	5
180	190	x	x						Dark red basalt cinders; some carbonate coatings; no fines		x			cong	x					x	10
190	210	x	x	x					Mostly angular light grey to med grey coarse sand (dacite?); minor red cinders												20

HSI
FIELD LOG

[1]Well No.: Deep Well 4 | [2]Location: Bellemont, Az | [3]Drilling Co.: ADT | [4]Hole Diameter: 10-inch | [5]Total Depth:

[6]Project Number: 05-400 | [7]Drilling Method: Dual Rotary | [8]Drilling Started: 5/7/05 | [9]Drilling Completed: 8/18/05 | [10]GPS: (lat) 35° 13' 45.034" (long) 111° 48' 9.472" (datum) NAD 27

[11]GW Measured at: 1,675 | [12]Other Logs: | [13]Elevation: 7150 | [14]Geologist: Steve Skotnicki | [15]Lab:

[16]Depth | [17]Cadastral: A(21-6)6cba

Feet bls		[18]Percent of Sample						[19]Color (Kleinfelder)	[20] Sample Description	[21]HCL Reaction			[22]Cement Type	[23]Rock Type	[24]Clasts (coarse-grained)						[25]Thickness of Unit
			Sand												Shape			Sorting			
From	To	Gravel	Coarse	Medium	Fine	Silt	Clay			None	Weak	Strong			Angular	Sub-angular	Rounded	Well Sorted	Moderately Sorted	Poorly Sorted	
210	270	x	x						Dark Grey Basalt					basalt							60
270	280	x	x						Gravel and coarse sand of basalt and light tan carb (Kaibab); sedimentary?		x			cong		x				x	10
280	295	x	x						Mostly coarse sand, minor gravel; about equal parts carb (Kaibab) and basalt clasts (caved?)			x		ss		x			x		15
295	300	x							Coarse gravel of sandy limestone(dibab) and basalt			x		cong		x			x		5
300	320	x	x						Light yellow sandy carbonate and grey chert (Kaibab); coarse sand and gravel			x		lm	x					x	20
320	325								No Sample												5
330	400	x	x						Light yellow sandy carbonate and grey chert (Kaibab); coarse sand and gravel			x		lm	x	x				x	70
400	410		x	x		x			Light yellow sandy carbonate; med. to coarse sand with some silt			x		lm		x			x		10
410	425		x						Light yellow carb. and grey chert; angular coarse sand			x		lm	x				x		15
425	495	x	x						Mostly coarse gravel w/minor coarse sand of light yellow carb (sandy) and grey cert (Kaibab)			x		lm	x					x	70
495	510	x	x						Mostly grey to pink chert w/lesser carb (Kaibab)			x		lm chert	x					x	15
510	520	x	x						Light yellow sandy carbonate and grey chert (Kaibab)			x		lm	x					x	10

HSI
FIELD LOG

[1]Well No.: Deep Well 4 | [2]Location: Bellemont, Az | [3]Drilling Co.: ADT | [4]Hole Diameter: 10-inch | [5]Total Depth:

[6]Project Number: 05-400 | [7]Drilling Method: Dual Rotary | [8]Drilling Started: 5/7/05 | [9]Drilling Completed: 8/18/05 | [10]GPS: (lat) 35° 13' 45.034" (long) 111° 48' 9.472" (datum) NAD 27

[11]GW Measured at: 1,675 | [12]Other Logs: | [13]Elevation: 7150 | [14]Geologist: Steve Skotnicki | [15]Lab:

[17]Cadastral: A(21-6)6cba

[16]Depth Feet bls		[18]Percent of Sample						[19]Color (Kleinfelder)	[20] Sample Description	[21]HCL Reaction			[22]Cement Type	[23]Rock Type	[24]Clasts (coarse-grained)						[25]Thickness of Unit
			Sand												Shape			Sorting			
From	To	Gravel	Coarse	Medium	Fine	Silt	Clay			None	Weak	Strong			Angular	Sub-angular	Rounded	Well Sorted	Moderately Sorted	Poorly Sorted	
520	530	x	x				x		Light yellow sandy carbonate, grey chert, and red-brown clay			x	cl	lm	x					x	10
530	540	x	x						Light yellow sandy carb & grey chert (Kaibab)		x			lm	x					x	10
540	565	x	x				x		Light yellow sandy carb, grey chert, and red brown clay			x	cl	lm	x					x	25
565	570	x	x						Mostly pink grey chert w/lesser light yellow carb		x			lm	x					x	5
570	630	x	x						Light yellow sandy carb and grey chert (Kaibab)			x		lm	x					x	60
630	635		x	x	x				Mostly med. sand of light yellow sandy carb and grey chert			x		lm	x						5
635	715	x	x						Light yellow sandy carb and grey chert (Kaibab)			x		lm	x					x	80
715	765				x				Well sorted fn-gn quartz sand with carb cement-fizzes strongly; light tan			x	carb	ss				x			50
765	805				x				Well sorted fn-gn quartz sand - no carb cement	x				ss				x			40
805	850				x				Well sorted fn-gn quartz sand with carb cement - moderate fizzing		x		carb	ss							45
850	920				x				Well sorted fn-gn quartz sand - no carb cement	x				ss				x			70
920	960			x	x				Fine and medium sand; weak HCl reaction		x			ss							40

HSI
FIELD LOG

[1]Well No.: Deep Well 4 | [2]Location: Bellemont, Az | [3]Drilling Co.: ADT | [4]Hole Diameter: 10-inch | [5]Total Depth:

[6]Project Number: 05-400 | [7]Drilling Method: Dual Rotary | [8]Drilling Started: 5/7/05 | [9]Drilling Completed: 8/18/05 | [10]GPS: (lat) 35° 13' 45.034" (long) 111° 48' 9.472" (datum) NAD 27

[11]GW Measured at: 1,675 | [12]Other Logs: | [13]Elevation: 7150 | [14]Geologist: Steve Skotnicki | [15]Lab:

[16]Depth | [17]Cadastral: A(21-6)6cba

Feet bls		[18]Percent of Sample						[19]Color (Kleinfelder)	[20] Sample Description	[21]HCL Reaction			[22]Cement Type	[23]Rock Type	[24]Clasts (coarse-grained)						[25]Thickness of Unit
			Sand												Shape			Sorting			
From	To	Gravel	Coarse	Medium	Fine	Silt	Clay			None	Weak	Strong			Angular	Sub-angular	Rounded	Well Sorted	Moderately Sorted	Poorly Sorted	
960	970	x	x	x	x				Fine to coarse quartz sand and gravel with dark pink carb clasts. Lt brown color			x		ss		x				x	10
970	1450				x				Well sorted light tan quartz sandstone; weak HCl fizz; mostly fine, some med. sand		x			ss				x			480
1450	1460				x				Light brown fine sand; some biotite visible (upper Supai)	x				ss							10
1460	1465				x				Light pink fine sand	x				ss				x			5
1465	1470				x				Light brown fine sand	x				ss				x			5
1470	1480				x				Light pink fine sand	x				ss				x			10
1480	2085				x				Light red-brown fine sand; fizzes; some layers contain minor medium sand		x			ss				x			605
2085	2240			x	x				Red-brown fine and medium sand; rare gravel clasts of schist (?)	x				ss				x			155
2240	2260		x	x	x				Red-brown fine med., and coarse sand	x				ss					x		20
2260	2280			x	x				Red-brown fine med., and coarse sand	x				ss				x			20
2280	2300				x				Red-brown fine sand	x				ss				x			20
2300	2320								No Sample												20

HSI
FIELD LOG

[1]Well No.: Deep Well 4 | [2]Location: Bellemont, Az | [3]Drilling Co.: ADT | [4]Hole Diameter: 10-inch | [5]Total Depth:

[6]Project Number: 05-400 | [7]Drilling Method: Dual Rotary | [8]Drilling Started: 5/7/05 | [9]Drilling Completed: 8/18/05 | [10]GPS: (lat) 35° 13' 45.034" (long) 111° 48' 9.472" (datum) NAD 27

[11]GW Measured at: 1,675 | [12]Other Logs: | [13]Elevation: 7150 | [14]Geologist: Steve Skotnicki | [15]Lab:

[16]Depth | [17]Cadastral: A(21-6)6cba

Feet bls | [18]Percent of Sample

From	To	Gravel	Sand: Coarse	Sand: Medium	Sand: Fine	Silt	Clay	[19]Color (Kleinfelder)	[20] Sample Description	[21]HCL Reaction: None	HCL Reaction: Weak	HCL Reaction: Strong	[22]Cement Type	[23]Rock Type	[24]Clasts (coarse-grained): Shape: Angular	Shape: Sub-angular	Shape: Rounded	Sorting: Well Sorted	Sorting: Moderately Sorted	Sorting: Poorly Sorted	[25]Thickness of Unit
2320	2345			x	x				Tan-brown fn-to medium sand; darker flakes may be shale, as well as light grey flakes		x			ss					x		25
2345	2360				x	x			Darker red-tan fine sand; minor medium sand; probably some silt		x			ss				x			15
2360	2395			x	x				Dark red-brown find to medium sand		x			ss				x			35
2395	2400		x	x					Dark red-brown med to coarse sand	x				ss				x			5
2400	2425			x	x	x			Dark red-brown fine to med sand coarser sand is chips of consol. sandstone		x			ss				x			25
2425	2450		x	x	x				Dark red-brown sand Abun. gypsum flakes		x			ss				x			25
2450	2500		x	x	x				Dark red-brown sand Abun. gypsum flakes- Strong Rx to HCl			x		ss					x		50
2500	2525			x	x				Dark red-brown silt & sand Finer than above. Strong Rx to HCl			x		ss					x		25
2525	2580		x	x					Red-brown sand 2025-2040 contains only minor gyp, but gyp becomes more abun ↓			x		ss					x		55
2580	2600				x				Light tan relatively clean, well sorted fn-gn sand			x		ss				x			20
2600	2665				x				Light tan-brown sand w/minor med sand of red brown ss chips, some gyp			x		ss					x		65
2665	2700			x	x				Light tan-brown sand w/more abund. red-brn ss & gyp chips (coarse sand size)			x		ss					x		35

HSI
FIELD LOG

[1]Well No.: Deep Well 4 | [2]Location: Bellemont, Az | [3]Drilling Co.: ADT | [4]Hole Diameter: 10-inch | [5]Total Depth:

[6]Project Number: 05-400 | [7]Drilling Method: Dual Rotary | [8]Drilling Started: 5/7/05 | [9]Drilling Completed: 8/18/05 | [10]GPS: (lat) 35° 13' 45.034" (long) 111° 48' 9.472" (datum) NAD 27

[11]GW Measured at: 1,675 | [12]Other Logs: | [13]Elevation: 7150 | [14]Geologist: Steve Skotnicki | [15]Lab:

[16]Depth | [17]Cadastral: A(21-6)6cba

Feet bls		[18]Percent of Sample						[19]Color (Kleinfelder)	[20] Sample Description	[21]HCL Reaction			[22]Cement Type	[23]Rock Type	[24]Clasts (coarse-grained)						[25]Thickness of Unit
			Sand												Shape			Sorting			
From	To	Gravel	Coarse	Medium	Fine	Silt	Clay			None	Weak	Strong			Angular	Sub-angular	Rounded	Well Sorted	Moderately Sorted	Poorly Sorted	
2700	2760		x	x	x				Light red-tan fn-gn sand w/abun. red brown coarse sand size s.s. chips abun. gyp flakes			x		ss					x		60
2760	2800			x	x				Light pink-tan fine sand									x			40
2800	2810			x	x				Light pink-tan fine sand			x		ss				x			10
2810	2820		x	x	x				Red-brown fine to coarse sand. Coarse sand may be chips of finer sand			x		ss						x	10
2820	2900			x	x				Red-brown fine to med grained sand; possibly some gypsum flakes			x		ss				x			80

G

Appendix G

Well Development

Development Day 1
Deep Well 4

Date	Time	Minutes Elapsed	Water Level (feet)	Drawdown (feet)	Totalizer (gallons)	Rate (gpm)	VFD (Hz)	Sand (mg/L)	Sand (ppm)	Specific Capacity	Notes
10/11/2005	1320	0	242.8	0	00000	0	0.0	0.0	0.0		Start flow at 150 gpm
10/11/2005	1340	20	209.7	33.1	1,380	69					
10/11/2005	1530	130	199.6	43.2	21,000	162					Set flow to 200 gpm
10/11/2005	1600	160	197.0	45.8	26,700	167		0.5	8.81	3.64	
10/11/2005	1630	190	194.5	48.3	32,700	172	54.0	0.5	8.81	3.56	Increase flow to 250 gpm, water temperature is 59° F.
10/11/2005	1700	220	181.8	61.0	41,600	189		5.5	96.86	3.10	Reduce flow to 200 gpm
10/11/2005	1730	250	191.9	50.9	47,700	191		2.0	35.22	3.75	
10/11/2005	1800	280	191.9	50.9	53,800	192		0.9	15.85	3.77	Day 1, 53,800 gallons pumped, average rate 192 gpm

Development Day 2
Deep Well 4

Date	Time	Minutes Elapsed	Water Level (feet)	Drawdown (feet)	Totalizer (gallons)	Rate (gpm)	VFD (Hz)	Sand (mg/L)	Sand (ppm)	Specific Capacity	Notes
10/12/2005	0715	0	242.8	0	55,900	0	0.0	0.0	0.0	0.00	Set flow to 150 gpm
10/12/2005	0730	15	219.9	22.9							Increase flow to 175 gpm
10/12/2005	0800	45	212.3	30.5	62,700	151		5.2	91.57	4.95	
10/12/2005	0900	105	207.2	35.6	74,000	172		3.0	52.83	4.84	
10/12/2005	0930	135	207.2	35.6	79,000	171	49.6	1.2	21.13	4.81	
10/12/2005	1000	165	204.7	38.1	84,000	170	49.5	0.7	12.33	4.47	
10/12/2005	1030	195	204.7	38.1	89,500	172	49.6	0.6	10.57	4.52	
10/12/2005	1100	225	204.7	38.1	94,800	173	49.5	0.8	14.09	4.54	
10/12/2005	1130	255	204.7	38.1	100,500	175	49.6	0.8	14.09	4.59	
10/12/2005	1200	285	202.1	40.7	105,700	175	49.6	0.6	10.57	4.29	Increase flow to 200 gpm
10/12/2005	1230	315	194.5	48.3	111,600	177	50.8	1.8	31.70	3.66	
10/12/2005	1300	345	194.5	48.3	117,800	179	50.6	1.8	31.70	3.71	
10/12/2005	1330	375	191.9	50.9	124,000	182	50.7	1.7	29.94	3.57	
10/12/2005	1400	405	191.9	50.9	130,200	183	50.6	1.9	33.46	3.60	
10/12/2005	1430	435	191.9	50.9	136,400	185	50.7	1.8	31.70	3.64	
10/12/2005	1500	465	189.4	53.4	142,600	186	50.7	1.3	22.89	3.49	
10/12/2005	1530	495	189.4	53.4	148,800	188	50.8	1.0	17.61	3.51	
10/12/2005	1600	525	189.4	53.4	155,000	189	50.7			3.53	
10/12/2005	1630	555	189.4	53.4	161,200	190	50.7	1.0	17.61	3.55	
10/12/2005	1700	585	189.4	53.4	167,400	191	50.8	0.9	15.85	3.57	
10/12/2005	1730	615	189.4	53.4	173,600	191	50.8	0.6	10.57	3.58	
10/12/2005	1800	645	186.9	55.9	179,800	192	50.9	0.9	15.85	3.44	Day 2, 123,900 gallons pumped, average rate 192 gpm

Development Day 3
Deep Well 4

Date	Time	Minutes Elapsed	Water Level (feet)	Drawdown (feet)	Totalizer (gallons)	Rate (gpm)	VFD (Hz)	Sand (mg/L)	Sand (ppm)	Specific Capacity	Notes
10/13/2005	0700	0	242.8	0	185,000	0	0.0	0.0	0.0	0.00	Set flow to 200 gpm
10/13/2005	0730	30	207.2	35.6	185,800	27	50.4	1.9	33.46	0.75	
10/13/2005	0800	60	202.1	40.7	192,000	117	50.6	0.5	8.81	2.87	Increase flow to 225 gpm
10/13/2005	0830	90	191.9	50.9	198,800	153	51.8	0.5	8.81	3.01	
10/13/2005	0900	120	189.4	53.4				0.4	7.04		Increase flow to 250 gpm
10/13/2005	0930	150	179.2	63.6			53.7	0.6	10.57		
10/13/2005	1000	180	176.7	66.1				1.3	22.89		
10/13/2005	1030	210	174.2	68.6	229,200	210	53.9	0.7	12.33	3.07	
10/13/2005	1100	240	174.2	68.6	237,000	217	53.9	0.6	10.57	3.16	Water temperature is 59° F
10/13/2005	1130	270	171.6	71.2	245,000	222	53.9	0.5	8.81	3.12	
10/13/2005	1200	300	171.6	71.2	252,800	226	53.9	0.4	7.04	3.17	
10/13/2005	1230	330	169.1	73.7	260,800	230	53.8	0.4	7.04	3.12	Increase flow to 275 gpm
10/13/2005	1300	360	161.4	81.4	269,300	234	55.7	0.5	8.81	2.88	
10/13/2005	1330	390	161.4	81.4	278,000	238	55.7	0.7	12.33	2.93	
10/13/2005	1400	420	158.9	83.9	286,700	242	56.0	0.6	10.57	2.89	
10/13/2005	1430	450	156.4	86.4	295,400	245	56.0	0.5	8.81	2.84	Increase flow to 300 gpm
10/13/2005	1500	480	148.7	94.1	304,900	250	57.6	0.9	15.85	2.65	
10/13/2005	1530	510	146.2	96.6	314,400	254	57.6	0.7	12.33	2.63	
10/13/2005	1600	540	146.2	96.6	324,000	257	57.5	0.6	10.57	2.66	
10/13/2005	1630	570	143.7	99.1	333,500	261	57.5	0.6	10.57	2.63	
10/13/2005	1700	600	143.7	99.1	343,000	263	57.5	0.8	14.09	2.66	
10/13/2005	1730	630	143.7	99.1	352,600	266	57.5	0.5	8.81	2.68	
10/13/2005	1800	660	141.1	101.7	362,000	268	57.5	0.5	8.81	2.64	Day 3, 177,000 gallons pumped, average rate 268 gpm

Development Day 4
Deep Well 4

Date	Time	Minutes Elapsed	Water Level (feet)	Drawdown (feet)	Totalizer (gallons)	Rate (gpm)	VFD (Hz)	Sand (mg/L)	Sand (ppm)	Specific Capacity	Notes
10/14/2005	0700	0	240.2	0	362,500	0	0.0	0.0	0.0	0.00	Set flow to 250 gpm
10/14/2005	0730	30	191.9	48.3	369,200	223	52.5	0.5	8.81	4.62	
10/14/2005	0800	60	184.3	55.9	377,100	243	52.7	0.1	1.76	4.35	Increase flow to 275 gpm, then 300 gpm
10/14/2005	0830	90	166.5	73.7	386,200	263	56.9	0.1	1.76	3.57	
10/14/2005	0900	120	161.4	78.8	395,700	277	57.1	0.2	3.52	3.51	Increase flow to 325 gpm
10/14/2005	0930	150	148.7	91.5	406,000	290	59.6	0.4	7.04	3.17	
10/14/2005	1000	180	146.2	94.0	416,300	299	59.6	0.6	10.57	3.18	Increase flow to 350 gpm
10/14/2005	1030	210	136.0	104.2	427,200	308	61.3	0.6	10.57	2.96	
10/14/2005	1100	240	130.9	109.3	438,400	316	61.3	1.0	17.61	2.89	
10/14/2005	1130	270	130.9	109.3	449,500	322	61.3	1.6	28.18	2.95	
10/14/2005	1200	300	128.4	111.8	460,500	327	61.3	1.0	17.61	2.92	Pump limitations prevent 375 gpm, continue at 350 gpm
10/14/2005	1230	330	128.4	111.8	471,500	330	61.3	0.4	7.04	2.95	
10/14/2005	1300	360	125.9	114.3	482,600	334	61.3	0.4	7.04	2.92	
10/14/2005	1330	390	125.9	114.3	493,700	336	61.3	0.3	5.28	2.94	
10/14/2005	1400	420	123.3	116.9	503,600	336	61.3	0.2	3.52	2.87	
10/14/2005	1430	450	123.3	116.9	515,900	341	61.3	0.1	1.76	2.92	
10/14/2005	1500	480	123.3	116.9	526,600	342	61.3	0.1	1.76	2.92	
10/14/2005	1530	510	120.8	119.4	537,600	343	61.3	0.06	1.06	2.88	Water temperature is 59° F
10/14/2005	1600	540	120.8	119.4	548,600	345	61.3	0.02	0.35	2.89	Day 4, 186,100 gallons pumped, average rate 345 gpm

H

Appendix H

Step Test and Constant Rate Test Field Notes and Measurements

Step Test 1 at 186 gpm - Drawdown
Deep Well 4

Date	Time	Minutes Elapsed	Water Level (feet)	Drawdown (feet)	Totalizer (gallons)	Rate (gpm)	VFD (Hz)	Sand (mg/L)	Sand (ppm)	Specific Capacity	Notes
10/19/2005	0730.00	0.00	242.8	0.0	582,100	0	0.0	0.0	0.0	0.00	Set flow at 175 gpm
10/19/2005	0730.15	0.25	242.8	0.0							
10/19/2005	0730.30	0.50	240.2	2.6							
10/19/2005	0730.45	0.75	235.1	7.7							
10/19/2005	0731.00	1.00	232.6	10.2							
10/19/2005	0731.15	1.25	230.1	12.7							
10/19/2005	0731.30	1.50	227.5	15.3							
10/19/2005	0731.45	1.75	227.5	15.3							
10/19/2005	0732	2.00	225.0	17.8							
10/19/2005	0733	3.00	222.4	20.4							
10/19/2005	0734	4.00	222.4	20.4							
10/19/2005	0375	5.00	219.9	22.9							
10/19/2005	0736	6.00	219.9	22.9							
10/19/2005	0737	7.00	219.9	22.9							
10/19/2005	0738	8.00	219.9	22.9							
10/19/2005	0739	9.00	219.9	22.9							
10/19/2005	0740	10	217.4	25.4	583,800	170	49.5			6.69	
10/19/2005	0745	15	217.4	25.4	584,700	173	49.5			6.82	
10/19/2005	0750	20	217.4	25.4	585,500	170	49.5			6.69	
10/19/2005	0800	30	214.8	28.0	587,200	170	49.5	0.70	12.3	6.07	
10/19/2005	0815	45	212.3	30.5	589,800	171	49.5			5.61	
10/19/2005	0830	60	209.7	33.1	592,500	173	50.0	0.17	3.0	5.24	Reset flow to 183 gpm due to data entry limits on VFD.
10/19/2005	0900	90	204.7	38.1	598,200	179	50.0	0.17	3.0	4.70	
10/19/2005	0930	120	204.7	38.1	603,900	182	50.0	0.17	3.0	4.77	
10/19/2005	1000	150	202.1	40.7	609,600	183	50.0	0.10	1.8	4.50	Water temperature is 59° F
10/19/2005	1030	180	202.1	40.7	615,200	184	49.5	0.10	1.8	4.52	
10/19/2005	1100	210	199.6	43.2	620,800	184	49.5	0.80	1.4	4.27	
10/19/2005	1130	240	199.6	43.2	626,500	185	49.5	0.10	1.8	4.28	
10/19/2005	1200	270	199.6	43.2	632,200	186	50.0	0.05	0.9	4.30	
10/19/2005	1230	300	197.0	45.8	637,800	186	49.5	0.05	0.9	4.05	
10/19/2005	1300	330	197.0	45.8	643,400	186	49.5	0.04	0.7	4.06	
10/19/2005	1330	360	197.0	45.8	649,000	186	50.0	0.04	0.7	4.06	
10/19/2005	1400	390	197.0	45.8	654,600	186	50.0	0.10	1.8	4.06	
10/19/2005	1430	420	197.0	45.8	660,200	186	50.0	0.04	0.7	4.06	
10/19/2005	1500	450	197.0	45.8	665,800	186	50.0	0.10	1.8	4.06	
10/19/2005	1530	480	197.0	45.8	671,300	186	50.0	0.04	0.7	4.06	Step 1, 186 gpm, 89,200 gallons pumped, 8-hours

Step Test 2 at 260 gpm - Drawdown
Deep Well 4

Date	Time	Minutes Elapsed	Water Level (feet)	Drawdown (feet)	Totalizer (gallons)	Rate (gpm)	VFD (Hz)	Sand (mg/L)	Sand (ppm)	Specific Capacity	Notes
10/20/2005	0700.00	0.00	242.8	0.0	671,700	0	0.0	0.0	0.0	0.00	Set flow at 250 gpm
10/20/2005	0700.15	0.25	237.8	5.0							
10/20/2005	0700.30	0.50	227.5	15.3							
10/20/2005	0700.45	0.75	217.4	25.4							
10/20/2005	0701.00	1.00	212.3	30.5							
10/20/2005	0701.15	1.25	207.2	35.6							
10/20/2005	0701.30	1.50	204.7	38.1							
10/20/2005	0701.45	1.75	202.1	40.7							
10/20/2005	0702	2.00	199.6	43.2							
10/20/2005	0703	3.00	202.1	40.7							
10/20/2005	0704	4.00	209.7	33.1							
10/20/2005	0705	5.00	209.7	33.1							
10/20/2005	0706	6.00	209.7	33.1							
10/20/2005	0707	7.00	204.7	38.1							
10/20/2005	0708	8.00	202.1	40.7							
10/20/2005	0709	9.00	202.1	40.7							
10/20/2005	0710	10	199.6	43.2	673,100	140	53.3			3.24	
10/20/2005	0715	15	199.6	43.2	674,400	180	51.8			4.17	
10/20/2005	0720	20	199.6	43.2	675,800	205	51.7			4.75	
10/20/2005	0730	30	191.9	50.9	678,200	217	53.1			4.26	
10/20/2005	0745	45	189.4	53.4	682,200	233	53.1			4.37	
10/20/2005	0800	60	186.9	55.9	686,100	240	53.1			4.29	
10/20/2005	0830	90	181.8	61.0	694,000	248	53.1			4.06	
10/20/2005	0900	120	181.8	61.0	701,800	251	53.5			4.11	
10/20/2005	0930	150	179.2	63.6	709,700	253	53.4	0.10	1.80	3.98	
10/20/2005	1000	180	176.7	66.1	717,300	253	53.4	0.20	3.50	3.83	
10/20/2005	1030	210	174.2	68.6	725,400	256	53.4	0.09	1.58	3.73	
10/20/2005	1100	240	174.2	68.6	733,200	256	53.5	0.05	0.88	3.74	
10/20/2005	1130	270	171.6	71.2	741,100	257	53.5	0.08	1.40	3.61	
10/20/2005	1200	300	169.1	73.7	749,000	258	53.5	0.10	1.80	3.50	
10/20/2005	1230	330	169.1	73.7	756,900	258	53.7	0.20	3.50	3.50	
10/20/2005	1300	360	169.1	73.7	764,800	259	53.4	0.15	2.64	3.51	
10/20/2005	1330	390	169.1	73.7	772,600	259	53.5	0.19	3.34	3.51	
10/20/2005	1400	420	169.1	73.7	780,500	259	53.5	0.07	1.23	3.51	
10/20/2005	1430	450	166.5	76.3	788,400	259	53.6	0.04	0.70	3.40	
10/20/2005	1500	480	166.5	76.3	796,300	260	53.6	0.02	0.35	3.40	Step 2, 260 gpm, 127,600 gallons pumped, 8-hours

Step Test 3 at 346 gpm - Drawdown
Deep Well 4

Date	Time	Minutes Elapsed	Water Level (feet)	Drawdown (feet)	Totalizer (gallons)	Rate (gpm)	VFD (Hz)	Sand (mg/L)	Sand (ppm)	Specific Capacity	Notes
10/21/2005	0700.00	0.00	242.8	0.0	796,400	0	0.0	0.00	0.00	0.00	Set flow at 325 gpm
10/21/2005	0700.15	0.25	240.2	2.6							
10/21/2005	0700.30	0.50	232.6	10.2							
10/21/2005	0700.45	0.75	219.9	22.9							
10/21/2005	0701.00	1.00	212.3	30.5							
10/21/2005	0701.15	1.25	207.2	35.6							
10/21/2005	0701.30	1.50	202.1	40.7							
10/21/2005	0701.45	1.75	199.6	43.2							
10/21/2005	0702	2.00	197.0	45.8							
10/21/2005	0703	3.00	194.5	48.3							
10/21/2005	0704	4.00	191.9	50.9							
10/21/2005	0705	5.00	186.9	55.9							
10/21/2005	0706	6.00	186.9	55.9							
10/21/2005	0707	7.00	184.3	58.5							
10/21/2005	0708	8.00	181.8	61.0							
10/21/2005	0709	9.00	181.8	61.0							
10/21/2005	0710	10	179.2	63.6	799,100	270	58.8			4.25	
10/21/2005	0715	15	176.7	66.1	800,800	293	58.9			4.44	
10/21/2005	0720	20	174.2	68.6	802,600	310	59.0			4.52	
10/21/2005	0730	30	166.5	76.3	805,900	317	58.0			4.15	
10/21/2005	0745	45	161.4	81.4	811,100	327	59.5			4.01	
10/21/2005	0800	60	158.9	83.9	816,300	332	59.5	2.30	40.50	3.95	
10/21/2005	0830	90	153.8	89.0	826,700	337	59.5	4.40	77.48	3.78	
10/21/2005	0900	120	151.3	91.5	837,000	338	59.5	2.20	38.74	3.70	
10/21/2005	0930	150	148.7	94.1	847,400	340	59.5	1.20	21.13	3.61	
10/21/2005	1000	180	146.2	96.6	857,800	341	59.6	1.30	22.89	3.53	
10/21/2005	1030	210	143.7	99.1	868,100	341	59.5	1.50	26.42	3.45	
10/21/2005	1100	240	141.1	101.7	878,500	342	59.5	1.00	17.61	3.36	
10/21/2005	1130	270	141.1	101.7	888,900	343	59.6	0.30	5.28	3.37	
10/21/2005	1200	300	138.6	104.2	899,200	343	59.5	0.25	4.40	3.29	
10/21/2005	1230	330	136.0	106.8	909,600	343	59.6	0.20	3.52	3.21	
10/21/2005	1300	360	136.0	106.8	920,000	343	59.6	0.20	3.52	3.21	
10/21/2005	1330	390	136.0	106.8	930,400	344	59.6	0.16	2.82	3.22	
10/21/2005	1400	420	133.5	109.3	940,700	344	59.5	0.13	2.29	3.14	
10/21/2005	1430	450	133.5	109.3	951,100	344	59.6	0.12	2.11	3.15	Water temperature is 59° F
10/21/2005	1500	480	133.5	109.3	961,500	344	59.5	0.17	2.99	3.15	
10/21/2005	1530	510	130.9	111.9	971,800	344	59.7	0.17	2.99	3.07	
10/21/2005	1600	540	130.9	111.9	982,200	344	59.5	0.22	3.87	3.07	

Step Test 3 at 346 gpm - Drawdown
Deep Well 4

Date	Time	Minutes Elapsed	Water Level (feet)	Drawdown (feet)	Totalizer (gallons)	Rate (gpm)	VFD (Hz)	Sand (mg/L)	Sand (ppm)	Specific Capacity	Notes
10/21/2005	1630	570	130.9	111.9	992,600	344	59.6	0.12	2.11	3.08	
10/21/2005	1700	600	128.4	114.4	1,002,900	344	59.5	0.08	1.41	3.01	
10/21/2005	1730	630	128.4	114.4	1,013,300	344	59.8	0.08	1.41	3.01	
10/21/2005	1800	660	128.4	114.4	1,023,700	344	59.7	0.10	1.76	3.01	
10/21/2005	1830	690	128.4	114.4	1,034,100	344	59.5	0.10	1.76	3.01	Metal flakes from column pipe came out discharge pipe
10/21/2005	1900	720	125.9	116.9	1,044,500	345	59.6	0.10	1.76	3.01	
10/21/2005	1930	750	125.9	116.9	1,054,800	345	59.6	0.07	1.23	2.95	
10/21/2005	2000	780	125.9	116.9	1,065,200	345	59.6	0.08	1.41	2.95	
10/21/2005	2030	810	125.9	116.9	1,075,600	345	59.6	0.08	1.41	2.95	
10/21/2005	2100	840	125.9	116.9	1,085,900	345	59.6	0.06	1.06	2.95	
10/21/2005	2130	870	125.9	116.9	1,097,900	347	59.6	0.09	1.58	2.96	
10/21/2005	2200	900	123.3	119.5	1,107,500	346	59.5	0.08	1.41	2.89	
10/21/2005	2230	930	123.3	119.5	1,118,800	347	59.9	0.15	2.64	2.90	
10/21/2005	2300	960	123.3	119.5	1,128,100	346	59.7	0.15	2.64	2.89	
10/21/2005	2330	990	123.3	119.5	1,139,700	347	59.7	0.12	2.11	2.90	
10/21/2005	2400	1020	123.3	119.5	1,149,900	347	59.5	0.10	1.76	2.90	
10/22/2005	0030	1050	123.3	119.5	1,159,200	346	59.7	0.09	1.58	2.89	
10/22/2005	0100	1080	123.3	119.5	1,170,500	346	59.6	0.18	3.17	2.90	
10/22/2005	0130	1110	120.8	122	1,180,900	346	59.8	0.19	3.35	2.84	
10/22/2005	0200	1140	120.8	122	1,190,300	346	59.6	0.08	1.41	2.83	
10/22/2005	0230	1170	120.8	122	1,201,700	346	59.7	0.15	2.64	2.84	
10/22/2005	0300	1200	120.8	122	1,211,100	346	59.6	0.13	2.29	2.83	
10/22/2005	0330	1230	120.8	122	1,221,400	346	59.6	0.09	1.58	2.83	
10/22/2005	0400	1260	120.8	122	1,232,700	346	59.6	0.08	1.41	2.84	
10/22/2005	0430	1290	120.8	122	1,242,100	346	59.7	0.07	1.23	2.83	
10/22/2005	0500	1320	120.8	122	1,253,500	346	59.7	0.07	1.23	2.84	
10/22/2005	0530	1350	120.8	122	1,263,800	346	59.8	0.04	0.70	2.84	
10/22/2005	0600	1380	120.8	122	1,273,200	346	59.8	0.04	0.70	2.83	
10/22/2005	0630	1410	120.8	122	1,284,600	346	59.7	0.04	0.70	2.84	
10/22/2005	0700	1440	120.8	122	1,293,900	345	59.6	0.05	0.88	2.83	
10/22/2005	0730	1470	120.8	122	1,304,300	346	59.6	0.02	0.35	2.83	
10/22/2005	0800	1500	120.8	122	1,314,600	345	59.6	0.02	0.35	2.83	
10/22/2005	0830	1530	120.8	122	1,325,000	345	59.6	0.02	0.35	2.83	
10/22/2005	0900	1560	120.8	122	1,335,400	346	59.8	0.03	0.53	2.83	
10/22/2005	0930	1590	118.2	124.6	1,345,600	345	59.6	0.02	0.35	2.77	
10/22/2005	1000	1620	118.2	124.6	1,356,800	346	59.6	0.02	0.35	2.78	
10/22/2005	1030	1650	118.2	124.6	1,366,400	345	59.7	0.02	0.35	2.77	Generator failure stop test. 27.5 hours. 570,000 gallons.

Constant Rate Aquifer Test - Drawdown
Deep Well 4

Date	Time	Minutes Elapsed	Water Level (feet)	Drawdown (feet)	Totalizer (gallons)	Rate (gpm)	VFD (Hz)	Sand (mg/L)	Sand (ppm)	Specific Capacity	Notes
10/25/05	0700.00	0.00	242.8	0.0	1,721,300	0	0.0	0.00	0.00	0.00	Set flow at VFD to 342 gpm (360 gpm at totalizer)
10/25/05	0700.15	0.25	235.1	7.7							
10/25/05	0700.30	0.50	225.0	17.8							
10/25/05	0700.45	0.75	214.8	28.0							
10/25/05	0701.00	1.00	204.7	38.1							
10/25/05	0701.15	1.25	197.0	45.8							
10/25/05	0701.30	1.50	194.5	48.3							
10/25/05	0701.45	1.75	189.4	53.4							
10/25/05	0702	2.00	186.9	55.9							
10/25/05	0703	3.00	186.9	55.9							
10/25/05	0704	4.00	186.9	55.9							
10/25/05	0705	5.00	184.3	58.5							
10/25/05	0706	6.00	181.8	61.0							
10/25/05	0707	7.00	179.2	63.6							
10/25/05	0708	8.00	176.7	66.1							
10/25/05	0709	9.00	176.7	66.1							
10/25/05	0710	10	174.2	68.6	1,724,000	270	60.4			3.94	
10/25/05	0715	15	169.1	73.7	1,725,800	300	60.7			4.07	
10/25/05	0720	20	166.5	76.3	1,727,600	315	61.0			4.13	
10/25/05	0730	30	161.4	81.4	1,731,200	330	61.0			4.05	
10/25/05	0745	45	156.4	86.4	1,736,600	340	61.1			3.94	
10/25/05	0800	60	151.3	91.5	1,742,100	347	61.1	2.60	45.79	3.79	Increase VFD to 348 gpm (370 gpm at totalizer)
10/25/05	0830	90	146.2	96.6	1,753,200	354	61.9	1.70	29.94	3.67	
10/25/05	0900	120	141.1	101.7	1,764,300	358	61.8	1.60	28.18	3.52	
10/25/05	0930	150	138.6	104.2	1,775,400	361	61.8	3.50	61.64	3.46	
10/25/05	1000	180	136.0	106.8	1,786,600	363	61.8	1.30	22.89	3.40	
10/25/05	1030	210	133.5	109.3	1,797,700	364	61.8	3.10	54.59	3.33	
10/25/05	1100	240	130.9	111.9	1,808,900	365	61.8	1.30	22.89	3.26	
10/25/05	1130	270	128.4	114.4	1,820,100	366	61.8	1.30	22.89	3.20	
10/25/05	1200	300	128.4	114.4	1,831,100	366	61.8	1.30	22.89	3.20	
10/25/05	1230	330	125.9	116.9	1,842,200	366	61.7	2.00	35.22	3.13	
10/25/05	1300	360	125.9	116.9	1,853,400	367	61.7	1.20	21.13	3.14	
10/25/05	1330	390	123.3	119.5	1,864,500	367	61.9	1.20	21.13	3.07	
10/25/05	1400	420	123.3	119.5	1,875,600	367	62.0	1.80	31.70	3.07	Water temperature is 59° F
10/25/05	1430	450	120.8	122.0	1,886,800	368	62.0	2.60	45.79	3.01	
10/25/05	1500	480	120.8	122.0	1,897,900	368	61.8	1.80	31.70	3.02	
10/25/05	1530	510	120.8	122.0	1,909,100	368	61.9	2.00	35.22	3.02	
10/25/05	1600	540	118.2	124.6	1,920,200	368	62.0	1.50	26.42	2.96	

Constant Rate Aquifer Test - Drawdown
Deep Well 4

Date	Time	Minutes Elapsed	Water Level (feet)	Drawdown (feet)	Totalizer (gallons)	Rate (gpm)	VFD (Hz)	Sand (mg/L)	Sand (ppm)	Specific Capacity	Notes
10/25/05	1630	570	118.2	124.6	1,931,300	368	61.8	1.60	28.18	2.96	
10/25/05	1700	600	118.2	124.6	1,942,500	369	61.9	1.40	24.65	2.96	
10/25/05	1730	630	118.2	124.6	1,953,600	369	61.9	1.60	28.18	2.96	
10/25/05	1800	660	115.7	127.1	1,965,700	370	61.8	1.00	17.61	2.91	
10/25/05	1830	690	115.7	127.1	1,975,900	369	61.9	1.00	17.61	2.90	
10/25/05	1900	720	115.7	127.1	1,987,000	369	61.9	0.70	12.33	2.90	
10/25/05	1930	750	115.7	127.1	1,998,100	369	62.0	0.60	10.57	2.90	
10/25/05	2000	780	113.2	129.6	2,008,850	369	62.0	0.55	9.69	2.84	
10/25/05	2030	810	113.2	129.6	2,020,125	369	62.0	1.00	17.61	2.85	
10/25/05	2100	840	113.2	129.6	2,031,725	370	62.1	1.00	17.61	2.85	
10/25/05	2130	870	113.2	129.6	2,043,150	370	62.2	2.45	43.14	2.85	
10/25/05	2200	900	113.2	129.6	2,053,925	370	62.1	1.50	26.42	2.85	
10/25/05	2230	930	110.6	132.2	2,065,100	370	61.9	0.80	14.09	2.80	
10/25/05	2300	960	110.6	132.2	2,076,100	370	62.0			2.80	
10/25/05	2330	990	110.6	132.2	2,087,350	370	61.6	0.70	12.33	2.80	
10/25/05	2400	1020	110.6	132.2	2,098,550	370	61.6	0.70	12.33	2.80	
10/26/05	0030	1050	110.6	132.2	2,109,750	370	62.1	0.75	13.21	2.80	
10/26/05	0100	1080	110.6	132.2	2,121,000	370	62.2	0.75	13.21	2.80	
10/26/05	0130	1110	110.6	132.2	2,132,000	370	62.1			2.80	Water level starting to fluctuate from 110.6 to 108.1
10/26/05	0200	1140	110.6	132.2	2,143,000	370	62.2	0.65	11.45	2.80	
10/26/05	0230	1170	110.6	132.2	2,154,550	370	62.0	0.65	11.45	2.80	
10/26/05	0300	1200	110.6	132.2	2,165,150	370	62.1	0.55	9.69	2.80	
10/26/05	0330	1230	108.1	134.7	2,176,100	370	62.1	0.50	8.81	2.75	
10/26/05	0400	1260	108.1	134.7							Estimated water level
10/26/05	0430	1290	108.1	134.7							Estimated water level
10/26/05	0500	1320	108.1	134.7	2,209,725	370	61.7			2.75	
10/26/05	0530	1350	108.1	134.7	2,221,450	370	62.1	1.00	17.61	2.75	
10/26/05	0600	1380	108.1	134.7	2,232,000	370	61.9	1.10	19.37	2.75	
10/26/05	0630	1410	108.1	134.7	2,243,300	370	62.0	0.95	16.73	2.75	
10/26/05	0700	1440	108.1	134.7	2,254,300	370	62.2	1.10	19.37	2.75	
10/26/05	0730	1470	108.1	134.7	2,265,400	370	61.8	2.50	44.03	2.75	Discharge is orange
10/26/05	0800	1500	105.5	137.3	2,278,000	371	62.0	1.10	19.37	2.70	Discharge has orange tint
10/26/05	0830	1530	105.5	137.3	2,288,000	370	62.1	0.50	8.81	2.70	Discharge is clear
10/26/05	0900	1560	105.5	137.3	2,299,000	370	62.2	1.00	17.61	2.70	
10/26/05	0930	1590	105.5	137.3	2,309,900	370	62.0	0.60	10.57	2.70	
10/26/05	1000	1620	105.5	137.3	2,321,100	370	62.3	0.60	10.57	2.70	
10/26/05	1030	1650	105.5	137.3	2,332,200	370	62.2	1.70	29.94	2.70	Discharge is orange
10/26/05	1100	1680	105.5	137.3	2,343,300	370	62.1	2.40	42.26	2.70	Discharge has orange tint

Constant Rate Aquifer Test - Drawdown
Deep Well 4

Date	Time	Minutes Elapsed	Water Level (feet)	Drawdown (feet)	Totalizer (gallons)	Rate (gpm)	VFD (Hz)	Sand (mg/L)	Sand (ppm)	Specific Capacity	Notes
10/26/05	1130	1710	105.5	137.3	2,354,500	370	62.2	1.00	17.61	2.70	Discharge is slightly cloudy
10/26/05	1200	1740	105.5	137.3	2,365,600	370	62.2	0.70	12.33	2.70	Discharge is clear
10/26/05	1230	1770	105.5	137.3	2,376,700	370	62.2	0.60	10.57	2.70	
10/26/05	1300	1800	105.5	137.3	2,387,900	370	62.0	0.40	7.04	2.70	
10/26/05	1330	1830	105.5	137.3	2,399,000	370	62.0			2.70	
10/26/05	1400	1860	105.5	137.3	2,410,100	370	62.1	0.50	8.81	2.70	
10/26/05	1430	1890	105.5	137.3	2,421,300	370	62.2	0.65	11.45	2.70	
10/26/05	1500	1920	105.5	137.3	2,432,400	370	62.1	0.60	10.57	2.70	
10/26/05	1530	1950	105.5	137.3	2,443,500	370	62.1			2.70	Water level starting to fluctuate from 105.5 to 103.0
10/26/05	1600	1980	105.5	137.3	2,454,700	370	62.1	0.90	15.85	2.70	
10/26/05	1630	2010	105.5	137.3	2,465,800	370	62.1			2.70	
10/26/05	1700	2040	105.5	137.3	2,476,900	370	62.1	0.70	12.33	2.70	Water temperature is 59° F
10/26/05	1730	2070	105.5	137.3	2,488,100	370	62.1	0.80	14.09	2.70	
10/26/05	1800	2100	103.0	139.8	2,499,200	370	62.2	1.10	19.37	2.65	
10/26/05	1830	2130	103.0	139.8	2,510,300	370	62.2	1.80	31.70	2.65	
10/26/05	1900	2160	103.0	139.8	2,521,675	371	62.4	0.70	12.33	2.65	
10/26/05	1930	2190	103.0	139.8	2,532,850	371	62.1	1.50	26.42	2.65	
10/26/05	2000	2220	103.0	139.8	2,544,175	371	62.3	2.90	51.07	2.65	
10/26/05	2030	2250	103.0	139.8	2,555,100	371	62.2	1.30	22.89	2.65	
10/26/05	2100	2280	103.0	139.8	2,566,150	371	62.2	1.10	19.37	2.65	
10/26/05	2130	2310	103.0	139.8	2,577,350	371	62.1	0.85	14.97	2.65	
10/26/05	2200	2340	103.0	139.8	2,588,500	371	62.2	0.75	13.21	2.65	
10/26/05	2230	2370	103.0	139.8	2,599,700	371	62.1	0.65	11.45	2.65	
10/26/05	2300	2400	103.0	139.8	2,611,000	371	61.9	0.90	15.85	2.65	
10/26/05	2330	2430	103.0	139.8	2,622,100	371	61.9	1.30	22.89	2.65	
10/26/05	2400	2460	103.0	139.8	2,633,350	371	62.1			2.65	
10/27/05	0030	2490	103.0	139.8	2,644,150	371	62.2	0.70	12.33	2.65	
10/27/05	0100	2520	103.0	139.8	2,655,500	371	62.2	0.50	8.81	2.65	
10/27/05	0130	2550	103.0	139.8	2,666,200	371	62.1	0.50	8.81	2.65	
10/27/05	0200	2580	103.0	139.8	2,677,325	371	62.2	0.50	8.81	2.65	
10/27/05	0230	2610	103.0	139.8	2,688,600	371	62.1	0.50	8.81	2.65	
10/27/05	0300	2640	103.0	139.8	2,700,000	371	61.7	0.45	7.92	2.65	VFD humming up/down loud noise, no change in data.
10/27/05	0330	2670	103.0	139.8	2,710,950	371	62.0	0.40	7.04	2.65	
10/27/05	0400	2700	103.0	139.8	2,722,000	371	62.1	0.35	6.16	2.65	
10/27/05	0430	2730	103.0	139.8	2,733,000	371	62.0	0.35	6.16	2.65	
10/27/05	0500	2760	103.0	139.8	2,744,150	371	62.1	0.35	6.16	2.65	
10/27/05	0530	2790	103.0	139.8	2,755,325	371	62.0			2.65	
10/27/05	0600	2820	103.0	139.8	2,766,475	371	62.1	0.35	6.16	2.65	Water level starting to fluctuate from 103.0 to 100.4

Constant Rate Aquifer Test - Drawdown
Deep Well 4

Date	Time	Minutes Elapsed	Water Level (feet)	Drawdown (feet)	Totalizer (gallons)	Rate (gpm)	VFD (Hz)	Sand (mg/L)	Sand (ppm)	Specific Capacity	Notes
10/27/05	0630	2850	103.0	139.8	2,777,600	371	62.0	1.30	22.89	2.65	
10/27/05	0700	2880	103.0	139.8	2,788,700	371	62.2	0.80	14.09	2.65	
10/27/05	0730	2910	103.0	139.8	2,799,800	371	62.2	1.20	21.13	2.65	Discharge turned orange
10/27/05	0800	2940	103.0	139.8	2,811,000	371	61.9	3.00	52.83	2.65	Discharge is slightly cloudy
10/27/05	0830	2970	103.0	139.8	2,822,100	371	62.1	1.30	22.89	2.65	
10/27/05	0900	3000	100.4	142.4	2,833,200	371	62.1			2.60	
10/27/05	0930	3030	100.4	142.4	2,844,400	371	61.9	0.80	14.09	2.60	
10/27/05	1000	3060	100.4	142.4	2,855,500	371	62.2	0.60	10.57	2.60	
10/27/05	1030	3090	100.4	142.4	2,866,600	371	61.9	0.60	10.57	2.60	
10/27/05	1100	3120	100.4	142.4	2,877,800	371	62.1			2.60	Fuel use is estimated at 26.3 gal/hr by generator
10/27/05	1130	3150	100.4	142.4							Gary B. and visitor onsite.
10/27/05	1200	3180	100.4	142.4							Don Bills onsite
10/27/05	1230	3210	100.4	142.4	2,911,200	371	62.2	2.40	14.09	2.60	No data collected
10/27/05	1300	3240	100.4	142.4	2,922,300	371	62.2	0.60	10.57	2.60	Sand estimate based on 90 minute sample.
10/27/05	1330	3270	100.4	142.4	2,933,400	371	62.4			2.60	Noticed very little air at discharge, manometer is 369 to 374
10/27/05	1400	3300	100.4	142.4	2,944,600	371	62.0	0.90	15.85	2.60	(369-374)
10/27/05	1430	3330	100.4	142.4	2,955,700	371	62.1	0.35	6.16	2.60	(369-374)
10/27/05	1500	3360	100.4	142.4	2,966,800	371	62.1	0.25	4.40	2.60	(369-374)
10/27/05	1530	3390	100.4	142.4	2,978,000	371	62.4	0.30	5.28	2.60	(369-374)
10/27/05	1600	3420	100.4	142.4	2,989,100	371	61.8	0.28	4.93	2.60	(369-374)
10/27/05	1630	3450	100.4	142.4	3,000,200	371	62.1	0.28	4.93	2.60	(369-374)
10/27/05	1700	3480	100.4	142.4	3,011,400	371	62.2	0.30	5.28	2.60	(369-374), discharge is clear
10/27/05	1730	3510	100.4	142.4	3,022,500	371	62.0	0.20	3.52	2.60	Water temperature is 59° F
10/27/05	1800	3540	100.4	142.4	3,033,600	371	62.2	0.30	5.28	2.60	(369-374)
10/27/05	1830	3570	100.4	142.4	3,044,800	371	62.1	0.20	3.52	2.60	(369-374)
10/27/05	1900	3600	100.4	142.4	3,055,975	371	62.2	0.25	4.40	2.60	(369-374)
10/27/05	1930	3630	100.4	142.4	3,067,075	371	62.0	0.25	4.40	2.60	(369-374)
10/27/05	2000	3660	100.4	142.4	3,078,375	371	62.2	0.20	3.52	2.60	
10/27/05	2030	3690	100.4	142.4	3,089,625	371	62.1	0.50	8.81	2.60	
10/27/05	2100	3720	100.4	142.4	3,100,800	371	62.2			2.60	
10/27/05	2130	3750	100.4	142.4	3,111,800	371	62.1	0.40	7.04	2.60	
10/27/05	2200	3780	100.4	142.4	3,122,800	371	62.0	0.35	6.16	2.60	(369-374)
10/27/05	2230	3810	100.4	142.4	3,134,000	371	62.3	0.30	5.28	2.60	
10/27/05	2300	3840	100.4	142.4	3,145,000	371	62.1	0.25	4.40	2.60	
10/27/05	2330	3870	100.4	142.4	3,156,200	371	62.2			2.60	
10/27/05	2400	3900	100.4	142.4	3,167,325	371	62.1	0.35	6.16	2.60	
10/28/05	0030	3930	100.4	142.4	3,178,600	371	62.2	0.30	5.28	2.60	
10/28/05	0100	3960	100.4	142.4	3,189,800	371	62.2	0.25	4.40	2.60	

Constant Rate Aquifer Test - Drawdown
Deep Well 4

Date	Time	Minutes Elapsed	Water Level (feet)	Drawdown (feet)	Totalizer (gallons)	Rate (gpm)	VFD (Hz)	Sand (mg/L)	Sand (ppm)	Specific Capacity	Notes
10/28/05	0130	3990	100.4	142.4	3,201,000	371	62.1	0.20	3.52	2.60	
10/28/05	0200	4020	100.4	142.4	3,212,200	371	62.2	0.20	3.52	2.60	(369-374)
10/28/05	0230	4050	100.4	142.4	3,223,000	371	62.1	0.20	3.52	2.60	
10/28/05	0300	4080	100.4	142.4	3,234,200	371	62.0	0.15	2.64	2.60	
10/28/05	0330	4110	100.4	142.4	3,245,400	371	62.1	0.15	2.64	2.60	
10/28/05	0400	4140	100.4	142.4	3,256,400	371	61.9			2.60	
10/28/05	0430	4170	100.4	142.4	3,267,575	371	62.0	0.20	3.52	2.60	
10/28/05	0500	4200	100.4	142.4	3,278,700	371	62.2	0.20	3.52	2.60	
10/28/05	0530	4230	100.4	142.4	3,290,000	371	62.1	0.20	3.52	2.60	
10/28/05	0600	4260	100.4	142.4	3,301,000	371	62.0	0.15	2.64	2.60	
10/28/05	0630	4290	100.4	142.4	3,312,200	371	62.0	0.20	3.52	2.60	(369-374)
10/28/05	0700	4320	100.4	142.4	3,323,100	371	61.9	0.19	3.35	2.60	(369-374)
10/28/05	0730	4350	100.4	142.4	3,334,300	371	62.1	0.17	2.99	2.60	Water level starting to fluctuate from 100.4 to 97.9
10/28/05	0800	4380	100.4	142.4	3,345,400	371	62.2	0.16	2.82	2.60	Some air at discharge, 369-374
10/28/05	0830	4410	100.4	142.4	3,356,600	371	62.2	0.18	3.17	2.60	
10/28/05	0900	4440	100.4	142.4	3,367,700	371	62.3	0.19	3.35	2.60	
10/28/05	0930	4470	100.4	142.4	3,378,500	371	62.2			2.60	
10/28/05	1000	4500	100.4	142.4	3,390,000	371	62.3	0.19	3.35	2.60	
10/28/05	1030	4530	100.4	142.4	3,401,100	371	62.2	0.17	2.99	2.60	
10/28/05	1100	4560	100.4	142.4	3,412,200	371	62.2	0.18	3.17	2.60	
10/28/05	1130	4590	100.4	142.4	3,423,400	371	62.1	0.20	3.52	2.60	(369-374)
10/28/05	1200	4620	100.4	142.4	3,434,500	371	62.1	0.20	3.52	2.60	(369-374)
10/28/05	1230	4650	100.4	142.4	3,445,600	371	62.1	0.19	3.35	2.60	(369-374)
10/28/05	1300	4680	100.4	142.4	3,456,800	371	62.2	0.30	5.28	2.60	
10/28/05	1330	4710	100.4	142.4	3,467,900	371	62.2	0.00	0.00	2.60	
10/28/05	1400	4740	100.4	142.4	3,479,000	371	62.2	0.21	3.70	2.60	More air at discharge
10/28/05	1430	4770	100.4	142.4	3,490,200	371	62.3	0.29	5.11	2.60	
10/28/05	1500	4800	100.4	142.4	3,501,300	371	62.2	0.16	2.82	2.60	
10/28/05	1530	4830	100.4	142.4	3,512,400	371	62.1	0.19	3.35	2.60	Fuel use is estimated at 24.3 gal/hr by generator
10/28/05	1600	4860	100.4	142.4	3,523,600	371	62.1	0.18	3.17	2.60	
10/28/05	1630	4890	100.4	142.4	3,534,700	371	62.2	0.26	4.58	2.60	
10/28/05	1700	4920	100.4	142.4	3,545,900	371	62.2	0.21	3.70	2.60	
10/28/05	1730	4950	97.9	144.9	3,557,000	371	62.3	0.23	4.05	2.56	
10/28/05	1800	4980	97.9	144.9	3,568,100	371	62.2	0.19	3.35	2.56	
10/28/05	1830	5010	97.9	144.9	3,579,200	371	62.3	0.32	5.64	2.56	
10/28/05	1900	5040	97.9	144.9	3,590,500	371	62.3	0.20	3.52	2.56	
10/28/05	1930	5070	97.9	144.9	3,601,600	371	62.3	0.18	3.17	2.56	
10/28/05	2000	5100	97.9	144.9	3,612,700	371	62.3	0.18	3.17	2.56	

Constant Rate Aquifer Test - Drawdown
Deep Well 4

Date	Time	Minutes Elapsed	Water Level (feet)	Drawdown (feet)	Totalizer (gallons)	Rate (gpm)	VFD (Hz)	Sand (mg/L)	Sand (ppm)	Specific Capacity	Notes
10/28/05	2030	5130	97.9	144.9	3,623,900	371	62.3	0.15	2.64	2.56	
10/28/05	2100	5160	97.9	144.9	3,634,900	371	62.4	0.12	2.11	2.56	
10/28/05	2130	5190	97.9	144.9	3,646,000	371	62.4	0.30	5.28	2.56	
10/28/05	2200	5220	97.9	144.9	3,657,150	371	62.3	0.35	6.16	2.56	
10/28/05	2230	5250	97.9	144.9	3,668,400	371	62.3	0.22	3.87	2.56	
10/28/05	2300	5280	97.9	144.9	3,679,600	371	62.3	0.35	6.16	2.56	
10/28/05	2330	5310	97.9	144.9	3,690,750	371	62.2	0.40	7.04	2.56	
10/28/05	2400	5340	97.9	144.9	3,701,950	371	62.3	0.50	8.81	2.56	
10/29/05	0030	5370	97.9	144.9	3,713,100	371	62.2	0.85	14.97	2.56	
10/29/05	0100	5400	97.9	144.9	3,724,000	371	62.2	0.35	6.16	2.56	
10/29/05	0130	5430	97.9	144.9	3,735,100	371	62.3	0.55	9.69	2.56	
10/29/05	0200	5460	97.9	144.9	3,746,250	371	62.3	0.35	6.16	2.56	
10/29/05	0230	5490	97.9	144.9	3,757,200	371	62.3	0.25	4.40	2.56	
10/29/05	0300	5520	97.9	144.9	3,768,550	371	62.2	0.25	4.40	2.56	
10/29/05	0330	5550	97.9	144.9	3,779,800	371	62.2	0.25	4.40	2.56	
10/29/05	0400	5580	97.9	144.9	3,790,600	371	62.1	0.20	3.52	2.56	
10/29/05	0430	5610	97.9	144.9	3,802,000	371	62.3	0.20	3.52	2.56	
10/29/05	0500	5640	97.9	144.9	3,813,200	371	62.1	0.25	4.40	2.56	
10/29/05	0530	5670	97.9	144.9	3,824,400	371	62.2	0.25	4.40	2.56	
10/29/05	0600	5700	97.9	144.9	3,835,500	371	62.3	0.20	3.52	2.56	
10/29/05	0630	5730	97.9	144.9	3,846,600	371	62.1	0.25	4.40	2.56	
10/29/05	0700	5760	97.9	144.9	3,857,700	371	62.4	2.90	51.07	2.56	Discharge turned deep orange, water temperature is 59° F
10/29/05	0730	5790	97.9	144.9	3,868,800	371	62.2	0.75	13.21	2.56	
10/29/05	0800	5820	97.9	144.9	3,879,900	371	62.2	0.46	8.10	2.56	Discharge has orange tint
10/29/05	0830	5850	97.9	144.9	3,892,700	371	62.2	0.69	12.15	2.56	
10/29/05	0900	5880	97.9	144.9	3,903,900	371	62.2	0.68	11.97	2.56	
10/29/05	0930	5910	97.9	144.9	3,914,100	371	62.4	0.55	9.69	2.56	
10/29/05	1000	5940	97.9	144.9	3,925,000	371	62.1	0.35	6.16	2.56	
10/29/05	1030	5970	97.9	144.9	3,936,500	371	62.1	0.39	6.87	2.56	
10/29/05	1100	6000	97.9	144.9	3,947,400	371	62.2	0.30	5.28	2.56	
10/29/05	1130	6030	97.9	144.9	3,958,500	371	62.1	0.36	6.34	2.56	
10/29/05	1200	6060	97.9	144.9	3,970,600	371	62.2	0.69	12.15	2.56	Discharge is orange
10/29/05	1230	6090	97.9	144.9	3,981,800	371	62.4	0.32	5.64	2.56	Discharge is clear
10/29/05	1300	6120	97.9	144.9	3,992,900	371	62.2	0.30	5.28	2.56	
10/29/05	1330	6150	97.9	144.9	4,003,100	371	62.4	0.28	4.93	2.56	
10/29/05	1400	6180	97.9	144.9	4,014,200	371	62.2	0.31	5.46	2.56	
10/29/05	1430	6210	97.9	144.9	4,025,300	371	62.1	0.30	5.28	2.56	
10/29/05	1500	6240	97.9	144.9	4,036,500	371	62.0	0.32	5.64	2.56	

Constant Rate Aquifer Test - Drawdown
Deep Well 4

Date	Time	Minutes Elapsed	Water Level (feet)	Drawdown (feet)	Totalizer (gallons)	Rate (gpm)	VFD (Hz)	Sand (mg/L)	Sand (ppm)	Specific Capacity	Notes
10/29/05	1530	6270	97.9	144.9	4,047,600	371	62.4	0.45	7.92	2.56	
10/29/05	1600	6300	97.9	144.9	4,059,800	371	62.2	0.24	4.23	2.56	
10/29/05	1630	6330	97.9	144.9	4,070,100	371	62.5	0.28	4.93	2.56	
10/29/05	1700	6360	97.9	144.9	4,081,100	371	62.5	0.16	2.82	2.56	
10/29/05	1730	6390	97.9	144.9	4,092,200	371	62.3	0.19	3.35	2.56	
10/29/05	1800	6420	97.9	144.9	4,103,100	371	62.4	0.15	2.64	2.56	
10/29/05	1830	6450	97.9	144.9	4,114,300	371	61.7	0.11	1.94	2.56	
10/29/05	1900	6480	97.9	144.9							
10/29/05	1930	6510	97.9	144.9							
10/29/05	2000	6540	97.9	144.9							
10/29/05	2030	6570	97.9	144.9	4,159,000	371	62.2	0.63	11.09	2.56	
10/29/05	2100	6600	97.9	144.9	4,169,600	371	62.1	0.08	1.41	2.56	
10/29/05	2130	6630	97.9	144.9	4,180,900	371	62.2	0.05	0.88	2.56	
10/29/05	2200	6660	97.9	144.9	4,192,000	371	62.3	0.02	0.35	2.56	
10/29/05	2230	6690	97.9	144.9	4,203,100	371	62.2	0.02	0.35	2.56	
10/29/05	2300	6720	97.9	144.9	4,214,300	371	62.3	0.02	0.35	2.56	
10/29/05	2330	6750	97.9	144.9	4,225,400	371	62.2	0.12	2.11	2.56	
10/29/05	2400	6780	97.9	144.9	4,236,500	371	62.3	0.02	0.35	2.56	
10/30/05	0030	6810	97.9	144.9	4,247,800	371	62.4	0.02	0.35	2.56	
10/30/05	0100	6840	97.9	144.9	4,259,000	371	62.5	0.05	0.88	2.56	
10/30/05	0130	6870	97.9	144.9	4,270,100	371	62.2	0.02	0.35	2.56	Water level starting to fluctuate from 97.9 to 95.4
10/30/05	0200	6900	97.9	144.9	4,281,300	371	62.2	0.02	0.35	2.56	
10/30/05	0230	6930	97.9	144.9	4,292,500	371	62.4	0.02	0.35	2.56	
10/30/05	0300	6960	97.9	144.9	4,303,500	371	62.2	0.02	0.35	2.56	
10/30/05	0330	6990	97.9	144.9	4,314,800	371	62.4	0.01	0.18	2.56	
10/30/05	0400	7020	97.9	144.9	4,325,800	371	62.3	0.01	0.18	2.56	
10/30/05	0430	7050	97.9	144.9	4,337,000	371	62.4	0.01	0.18	2.56	
10/30/05	0500	7080	97.9	144.9	4,347,800	371	62.3	0.02	0.35	2.56	
10/30/05	0530	7110	97.9	144.9	4,359,000	371	62.4	0.01	0.18	2.56	
10/30/05	0600	7140	97.9	144.9	4,370,200	371	62.5	0.55	9.69	2.56	
10/30/05	0630	7170	97.9	144.9	4,381,000	371	62.2	0.25	4.40	2.56	
10/30/05	0700	7200	97.9	144.9							
10/30/05	0730	7230	97.9	144.9							
10/30/05	0800	7260	97.9	144.9							
10/30/05	0830	7290	97.9	144.9	4,426,100	371	62.3	1.00	17.61	2.56	
10/30/05	0900	7320	97.9	144.9	4,437,200	371	62.3	0.21	3.70	2.56	
10/30/05	0930	7350	97.9	144.9	4,448,400	371	62.2	0.29	5.11	2.56	
10/30/05	1000	7380	97.9	144.9	4,460,500	371	62.2	0.25	4.40	2.56	

Constant Rate Aquifer Test - Drawdown
Deep Well 4

Date	Time	Minutes Elapsed	Water Level (feet)	Drawdown (feet)	Totalizer (gallons)	Rate (gpm)	VFD (Hz)	Sand (mg/L)	Sand (ppm)	Specific Capacity	Notes
10/30/05	1030	7410	97.9	144.9							Fueling generator
10/30/05	1100	7440	97.9	144.9	4,482,800	371	62.1	0.38	6.69	2.56	
10/30/05	1130	7470	97.9	144.9	4,493,900	371	62.3	0.23	4.05	2.56	
10/30/05	1200	7500	97.9	144.9	4,504,100	371	62.2	0.12	2.11	2.56	
10/30/05	1230	7530	97.9	144.9	4,515,300	371	62.1	0.10	1.76	2.56	
10/30/05	1300	7560	97.9	144.9	4,526,300	371	62.3	0.12	2.11	2.56	
10/30/05	1330	7590	97.9	144.9	4,537,500	371	62.1	0.08	1.41	2.56	
10/30/05	1400	7620	97.9	144.9	4,548,600	371	62.4	0.08	1.41	2.56	
10/30/05	1430	7650	97.9	144.9	4,560,700	371	62.1	0.10	1.76	2.56	
10/30/05	1500	7680	97.9	144.9	4,571,800	371	62.4	0.09	1.58	2.56	
10/30/05	1530	7710	97.9	144.9	4,582,000	371	62.4	0.08	1.41	2.56	
10/30/05	1600	7740	97.9	144.9	4,593,000	371	62.3	0.09	1.58	2.56	
10/30/05	1630	7770	97.9	144.9	4,604,200	371	62.5	0.08	1.41	2.56	
10/30/05	1700	7800	97.9	144.9	4,615,300	371	62.3	0.08	1.41	2.56	
10/30/05	1730	7830	97.9	144.9	4,626,500	371	62.5	0.10	1.76	2.56	
10/30/05	1800	7860	97.9	144.9							
10/30/05	1830	7890	97.9	144.9							
10/30/05	1900	7920	97.9	144.9	4,659,000	371	62.3	0.20	3.52	2.56	
10/30/05	1930	7950	97.9	144.9	4,670,100	371	62.4	0.10	1.76	2.56	
10/30/05	2000	7980	97.9	144.9	4,681,200	371	62.5	0.08	1.41	2.56	
10/30/05	2030	8010	95.4	147.4	4,692,400	371	62.4	0.07	1.23	2.52	
10/30/05	2100	8040	95.4	147.4	4,703,500	371	62.3	0.07	1.23	2.52	
10/30/05	2130	8070	95.4	147.4	4,715,300	371	62.3	0.05	0.88	2.52	
10/30/05	2200	8100	95.4	147.4	4,723,800	371	62.4	0.04	0.70	2.51	
10/30/05	2230	8130	95.4	147.4	4,736,900	371	62.3	0.03	0.53	2.52	
10/30/05	2300	8160	95.4	147.4	4,748,000	371	62.4	0.03	0.53	2.52	
10/30/05	2330	8190	95.4	147.4	4,759,100	371	62.1	0.03	0.53	2.52	
10/30/05	2400	8220	95.4	147.4	4,770,200	371	62.3	0.03	0.53	2.52	
10/31/05	0030	8250	95.4	147.4	4,781,400	371	62.2	0.03	0.53	2.52	
10/31/05	0100	8280	95.4	147.4	4,792,400	371	62.2	0.02	0.35	2.52	
10/31/05	0130	8310	95.4	147.4	4,803,500	371	62.2	0.02	0.35	2.52	
10/31/05	0200	8340	95.4	147.4	4,814,600	371	62.3	0.03	0.53	2.52	
10/31/05	0230	8370	95.4	147.4	4,825,800	371	62.5	0.08	1.41	2.52	
10/31/05	0300	8400	95.4	147.4	4,837,900	371	62.3	0.03	0.53	2.52	
10/31/05	0330	8430	95.4	147.4	4,848,000	371	62.3	0.02	0.35	2.52	
10/31/05	0400	8460	95.4	147.4	4,859,200	371	62.4	0.02	0.35	2.52	
10/31/05	0430	8490	95.4	147.4	4,870,300	371	62.4	0.03	0.53	2.52	
10/31/05	0500	8520	95.4	147.4	4,881,500	371	62.3	0.03	0.53	2.52	

Constant Rate Aquifer Test - Drawdown
Deep Well 4

Date	Time	Minutes Elapsed	Water Level (feet)	Drawdown (feet)	Totalizer (gallons)	Rate (gpm)	VFD (Hz)	Sand (mg/L)	Sand (ppm)	Specific Capacity	Notes
10/31/05	0530	8550	95.4	147.4	4,892,600	371	62.3	0.02	0.35	2.52	
10/31/05	0600	8580	95.4	147.4	4,903,800	371	62.3	0.01	0.18	2.52	
10/31/05	0630	8610	95.4	147.4	4,914,800	371	62.3	0.02	0.35	2.52	
10/31/05	0700	8640	95.4	147.4	4,925,900	371	62.0	0.01	0.18	2.52	Note flow on Rosin filter was too slow, increase rate
10/31/05	0730	8670	95.4	147.4	4,937,500	371	62.0	0.01	0.18	2.52	Discharge is deep orange
10/31/05	0800	8700	95.4	147.4	4,948,600	371	62.3	0.60	10.57	2.52	
10/31/05	0830	8730	95.4	147.4	4,959,800	371	62.2	4.40	77.48	2.52	Discharge is orange
10/31/05	0900	8760	95.4	147.4	4,970,900	371	62.2	2.00	35.22	2.52	Discharge is orange
10/31/05	0930	8790	95.4	147.4	4,982,000	371	62.5	1.70	29.94	2.52	
10/31/05	1000	8820	95.4	147.4	4,993,200	371	62.2	1.00	17.61	2.52	
10/31/05	1030	8850	95.4	147.4	5,004,300	371	62.3	0.90	15.85	2.52	
10/31/05	1100	8880	95.4	147.4	5,015,400	371	62.2	0.68	11.97	2.52	
10/31/05	1130	8910	95.4	147.4	5,026,500	371	62.5	0.60	10.57	2.52	Water level 97.5 appeared on display momentarily
10/31/05	1200	8940	95.4	147.4	5,037,700	371	62.3	0.50	8.81	2.52	
10/31/05	1230	8970	95.4	147.4	5,048,800	371	62.2	0.40	7.04	2.52	Discharge is clear
10/31/05	1300	9000	95.4	147.4	5,060,000	371	62.3	0.37	6.52	2.52	
10/31/05	1330	9030	95.4	147.4	5,071,100	371	62.4	0.39	6.87	2.52	
10/31/05	1400	9060	95.4	147.4	5,082,200	371	62.2			2.52	
10/31/05	1430	9090	95.4	147.4	5,093,300	371	62.1	0.47	8.28	2.52	Add fuel to generator
10/31/05	1500	9120	95.4	147.4	5,104,500	371	62.2			2.52	
10/31/05	1530	9150	95.4	147.4	5,115,600	371	62.1	0.32	5.64	2.52	
10/31/05	1600	9180	95.4	147.4	5,126,700	371	62.2	0.26	4.58	2.52	
10/31/05	1630	9210	95.4	147.4	5,137,900	371	62.2	0.20	3.52	2.52	Manometer started to work again, 369-374
10/31/05	1700	9240	95.4	147.4	5,149,000	371	62.4	0.20	3.52	2.52	
10/31/05	1730	9270	95.4	147.4	5,160,100	371	62.4	0.20	3.52	2.52	(369-374)
10/31/05	1800	9300	95.4	147.4	5,171,200	371	62.4	0.19	3.35	2.52	(369-374)
10/31/05	1830	9330	95.4	147.4	5,182,400	371	62.3	0.26	4.58	2.52	
10/31/05	1900	9360	95.4	147.4	5,193,000	371	62.5	0.20	3.52	2.52	
10/31/05	1930	9390	95.4	147.4	5,204,200	371	62.4	0.26	4.58	2.52	
10/31/05	2000	9420	95.4	147.4	5,215,300	371	62.5	0.18	3.17	2.52	
10/31/05	2030	9450	95.4	147.4	5,226,500	371	62.2	0.28	4.93	2.52	
10/31/05	2100	9480	95.4	147.4	5,237,700	371	62.4	0.21	3.70	2.52	
10/31/05	2130	9510	95.4	147.4	5,248,700	371	62.1	0.18	3.17	2.52	
10/31/05	2200	9540	95.4	147.4	5,259,900	371	62.2	0.19	3.35	2.52	
10/31/05	2230	9570	95.4	147.4	5,271,000	371	62.3	0.15	2.64	2.52	
10/31/05	2300	9600	95.4	147.4	5,282,100	371	62.3	0.19	3.35	2.52	
10/31/05	2330	9630	95.4	147.4	5,293,200	371	62.4	0.20	3.52	2.52	
10/31/05	2400	9660	95.4	147.4	5,304,400	371	62.3	0.17	2.99	2.52	

Constant Rate Aquifer Test - Drawdown
Deep Well 4

Date	Time	Minutes Elapsed	Water Level (feet)	Drawdown (feet)	Totalizer (gallons)	Rate (gpm)	VFD (Hz)	Sand (mg/L)	Sand (ppm)	Specific Capacity	Notes
11/01/05	0030	9690	95.4	147.4	5,315,800	371	62.4	0.13	2.29	2.52	
11/01/05	0100	9720	95.4	147.4	5,326,600	371	62.1	0.10	1.76	2.52	
11/01/05	0130	9750	95.4	147.4	5,337,800	371	62.2	0.10	1.76	2.52	
11/01/05	0200	9780	95.4	147.4	5,349,000	371	62.0	0.12	2.11	2.52	
11/01/05	0230	9810	95.4	147.4	5,360,200	371	62.2	0.10	1.76	2.52	
11/01/05	0300	9840	95.4	147.4	5,371,800	371	62.3	0.09	1.58	2.52	
11/01/05	0330	9870	95.4	147.4	5,382,300	371	62.3	0.08	1.41	2.52	
11/01/05	0400	9900	95.4	147.4	5,393,400	371	62.4	0.08	1.41	2.52	
11/01/05	0430	9930	95.4	147.4	5,404,600	371	62.3	0.08	1.41	2.52	
11/01/05	0500	9960	95.4	147.4	5,415,800	371	62.4	0.08	1.41	2.52	
11/01/05	0530	9990	95.4	147.4	5,426,800	371	62.3	0.07	1.23	2.52	
11/01/05	0600	10020	95.4	147.4	5,437,900	371	62.3	0.08	1.41	2.52	
11/01/05	0630	10050	95.4	147.4	5,449,200	371	62.4	0.08	1.41	2.52	
11/01/05	0700	10080	95.4	147.4	5,461,700	371	62.3	0.07	1.23	2.52	Pump off, start recovery

Constant Rate Aquifer Test - Recovery
Deep Well 4

Date	Time	t (minutes)	t' (minutes)	t/t'	Water Level (feet)	Residual Drawdown	Cumulative Recovery
11/01/05	0700.00	10080.00	0.00		95.4	147.4	0.0
11/01/05	0700.15	10080.25	0.25	40,321.00	97.9	144.9	2.5
11/01/05	0700.30	10080.50	0.50	20,161.00	118.2	124.6	22.8
11/01/05	0700.45	10080.75	0.75	13,441.00	128.4	114.4	33.0
11/01/05	0701.00	10081.00	1.00	10,081.00	136.0	106.8	40.6
11/01/05	0701.15	10081.25	1.25	8,065.00	141.1	101.7	45.7
11/01/05	0701.30	10081.50	1.50	6,721.00	143.7	99.1	48.3
11/01/05	0701.45	10081.75	1.75	5,761.00	148.7	94.1	53.3
11/01/05	0702.00	10082.00	2.00	5,041.00	148.7	94.1	53.3
11/01/05	0702.15	10082.25	2.25	4,481.00	151.3	91.5	55.9
11/01/05	0702.30	10082.50	2.50	4,033.00	151.3	91.5	55.9
11/01/05	0702.45	10082.75	2.75	3,666.45	153.8	89.0	58.4
11/01/05	0703.00	10083.00	3.00	3,361.00	153.8	89.0	58.4
11/01/05	0703.30	10083.50	3.50	2,881.00	156.4	86.4	61.0
11/01/05	0704.00	10084.00	4.00	2,521.00	158.9	83.9	63.5
11/01/05	0704.30	10084.50	4.50	2,241.00	158.9	83.9	63.5
11/01/05	0705.00	10085.00	5.00	2,017.00	158.9	83.9	63.5
11/01/05	0705.30	10085.50	5.50	1,833.73	161.4	81.4	66.0
11/01/05	0706	10086	6	1,681.00	161.4	81.4	66.0
11/01/05	0707	10087	7	1,441.00	164.0	78.8	68.6
11/01/05	0708	10088	8	1,261.00	164.0	78.8	68.6
11/01/05	0709	10089	9	1,121.00	166.5	76.3	71.1
11/01/05	0710	10090	10	1,009.00	166.5	76.3	71.1
11/01/05	0711	10091	11	917.36	169.1	73.7	73.7
11/01/05	0712	10092	12	841.00	169.1	73.7	73.7
11/01/05	0713	10093	13	776.38	171.6	71.2	76.2
11/01/05	0714	10094	14	721.00	171.6	71.2	76.2
11/01/05	0716	10096	16	631.00	174.2	68.6	78.8
11/01/05	0718	10098	18	561.00	174.2	68.6	78.8
11/01/05	0720	10100	20	505.00	176.7	66.1	81.3
11/01/05	0724	10104	24	421.00	179.2	63.6	83.8
11/01/05	0725	10105	25	404.20	179.2	63.6	83.8
11/01/05	0729	10109	29	348.59	181.8	61.0	86.4
11/01/05	0730	10110	30	337.00	181.8	61.0	86.4
11/01/05	0735	10115	35	289.00	184.3	58.5	88.9
11/01/05	0740	10120	40	253.00	184.3	58.5	88.9
11/01/05	0743	10123	43	235.42	186.9	55.9	91.5
11/01/05	0745	10125	45	225.00	186.9	55.9	91.5
11/01/05	0750	10130	50	202.60	186.9	55.9	91.5
11/01/05	0751	10131	51	198.65	189.4	53.4	94.0
11/01/05	0755	10135	55	184.27	189.4	53.4	94.0
11/01/05	0800	10140	60	169.00	191.9	50.9	96.5
11/01/05	0810	10150	70	145.00	191.9	50.9	96.5
11/01/05	0813	10153	73	139.08	194.5	48.3	99.1
11/01/05	0815	10155	75	135.40	194.5	48.3	99.1
11/01/05	0828	10168	88	115.55	197.0	45.8	101.6
11/01/05	0842	10182	102	99.82	199.6	43.2	104.2
11/01/05	0902	10202	122	83.62	202.1	40.7	106.7

Constant Rate Aquifer Test - Recovery
Deep Well 4

Date	Time	t (minutes)	t' (minutes)	t/t'	Water Level (feet)	Residual Drawdown	Cumulative Recovery
11/01/05	0925	10225	145	70.52	204.7	38.1	109.3
11/01/05	0952	10252	172	59.60	207.2	35.6	111.8
11/01/05	1023	10283	203	50.66	209.7	33.1	114.3
11/01/05	1102	10322	242	42.65	212.3	30.5	116.9
11/01/05	1148	10368	288	36.00	214.8	28.0	119.4
11/01/05	1300	10440	360	29.00	217.4	25.4	122.0
11/01/05	1425	10525	445	23.65	219.9	22.9	124.5
11/01/05	1619	10639	559	19.03	222.4	20.4	127.0
11/01/05	1944	10844	764	14.19	225.0	17.8	129.6
11/02/05	0037	11273	1193	9.45	227.5	15.3	132.1
11/02/05	0916	11656	1576	7.40	230.1	12.7	134.7
11/03/05	0113	12613	2533	4.98	232.6	10.2	137.2
11/04/05	1300	14760	4680	3.15	235.1	7.7	139.7
11/07/05	0700	18720	8640	2.17	237.7	5.1	142.3

I

Appendix I

City of Flagstaff Water Level History

Static Water Level History

LAKE MARY WELLS	Date Drilled	gpm	Drilled static	Highest Static Water Level in Calendar year					
				1999	2000	2001	2002	2003	2004
LM #1	1962	146	598	595	626	646	656	657.8	622
LM #2	1964	396	452	544	551	607	610	600	591
LM #3	1965	not equip	754				757	757	758.1
LM #4	1972	645	330	440	482	547	537	537.4	498
LM #5	1975	250	275	400	462	460	482	480	524
LM #7	1977	170	1093	1154	1154	1139	1157	1144	1144
LM #8	1982	1320	271	400	455	456	491	492	400
LM #9	1991	220	82	220	273	444	333	326	343

WOODY MTN. WELLS	Date Drilled	gpm	Drilled static	Highest Static Water Level in Calendar year					
				1999	2000	2001	2002	2003	2004
WM #1	1954	250	1221	1249	1241	1240	1268	1244	1239
WM #2	1956	300	1242	1261	1278	1290	1309	1295	1295
WM #3	1957	575	1209	1232	1254	1266	1277	1278	1274
WM #4	1957	375	1083	1105	1186	1188	1181	1148	1145
WM #5	1963	250	1119	1110	1155	1171	1177	1153	1141
WM #6	1968	410	1094	1135	1152	1164	1177	1184	1179
WM #7	1978	530	1099	1105	1131	1133	1156	1164	1152
WM #9	1985	550	982	974	967	988	985	986	992
WM #10	1995	275	1120	1140	1151	1161	1169	1173	1171
WM #11	1997	350	1111		1124	1117	1124	1147	1137

LOCAL WELLS	Date Drilled	gpm	Drilled static	Highest Static Water Level in Calendar year					
				1999	2000	2001	2002	2003	2004
Cont.	1997	325	1313	1313	1336	1309	1324	1314	1318
Foxglenn	1997	300	1307	1307	1316	1341	1341	1332	1324
Shop	2002	200	1454				1457	1454	1454
Intrchnge	2002	1000	1378				1387	1400	1400

INNER BASIN	Date Drilled	gpm	Drilled static	Highest Static Water Level in Calendar year					
				1999	2000	2001	2002	2003	2004
IB #9	1968	variable	143			275	260	266.6	275
IB #11	1971	variable	0			112	99	90.3	129
IB #14	1970	variable	120			194	200	204.7	214

OTHER	Date Drilled	gpm	Drilled static	Highest Static Water Level in Calendar year					
				1999	2000	2001	2002	2003	2004
Skunk	1996	50	928				930	929.4	929

J

Appendix J

ADWR and USGS Water Quality Data

ADWR GWSI Database
Water Quality

Well Site ID	Local ID	Well Reg. ID	Perf. Top	Perf. Bottom	Measurement Date	Specific Conductance	Fluoride	Temperature (°C)	pH	Alkalinity	Dissolved Oxygen
351354111513601	A-21-05 03BCC	No Match			8/2/1978	190		15	6.8		
351320111503301	A-21-05 10AAA	No Match			8/2/1978	350		11	7.2		
351320111503301	A-21-05 10AAA	No Match			4/19/1994	310	0	9.5	7.6		
351313111495801	A-21-05 11ABC	No Match			8/2/1978	260		8.5	7.3		
351313111495801	A-21-05 11ABC	No Match			4/19/1994	260	0	8	7.8		
351307111500401	A-21-05 11BDA	No Match			8/10/1994	330	0.1	12	7.2	151	
351324111504501	A-21-05N10DDC	No Match			8/2/1978	250		26	8.9		
351334111481402	A-21-06 06CCA3	No Match			9/6/1949	351					
351330111475901	A-21-06 06CDD	No Match			8/8/1994	380	0.2	16	8	185	
351218111463601	A-21-06 17ACA	No Match			8/2/1978	230		24	7.6		
351057111465501	A-21-06 20CDA	No Match			9/6/1949	290		14			
350933111440801	A-21-06 35BCC	606203	1300	1600	8/8/1994	210	0.1	12	8	106	
350905111440801	A-21-06 35CCC	606204	1213	1518	4/3/1958	288					
351815111534001	A-22-05 08BCC	No Match			6/6/1979	165		20.5			
351716111520901	A-22-05 16DBC	610507			6/5/1978	195		15	8		
351716111520901	A-22-05 16DBC	610507			8/9/1994	181	0.1	9.5	8.2	94	
351716111520901	A-22-05 16DBC	610507			6/29/1999	194	0.1	10.5	8.3	93	7.4
351716111520901	A-22-05 16DBC	610507			6/20/2000	196	0.1	11	8.2	92	7.3
351716111520901	A-22-05 16DBC	610507			6/21/2001	196	0.1	11.5	8.1	91	8
351604111544001	A-22-05 19CCC	No Match			5/25/1978	150		9	6.8		
351605111544201	A-22-05 19CCC2	No Match			8/9/1994	280	0.1	10.5	7.1	129	
351510111503801	A-22-05 27DDD	524148			8/9/1994	165	0.1	14	8.3	84	
351419111491701	A-22-05 36CCD1	No Match	20	200	6/6/1978	480		12	6.9		
351823111424301	A-22-06 12BDC	No Match			8/23/1978	100		15	6.6		
351714111425101	A-22-06 13CAC	No Match			8/23/1978	150		15	6.2		
351736111432701	A-22-06 14ACA	No Match			8/23/1978	120		11	6.8		
351657111474601	A-22-06 18DCC	No Match			6/5/1978	195		12	6.8		
351657111474601	A-22-06 18DCC	No Match			4/21/1994	190	0.2	9	7		
351638111440701	A-22-06 23BCB	613506	150	191	11/16/1967	227	0		7.1	88	
351627111440301	A-22-06 23CBB2	504135			2/23/1988	195	0.1	9	8		
351619111440501	A-22-06 23CBC2	630400	126	182	6/19/1979	167					
351608111440701	A-22-06 23CCC	504028	95	250	2/23/1988	180	0.1	12	9		
351618111432301	A-22-06 23DCA2	No Match			8/29/1968	260		10.5			
351611111432201	A-22-06 23DDC	601319	105	160	7/20/1978	125		13	8.3		
351538111424801	A-22-06 25CAB2	601778	218	258	6/26/1979	150		14.5			
351529111424601	A-22-06 25CAC1	802954	40	80	6/26/1979	180		11.5			
351531111425201	A-22-06 25CBD	No Match			6/26/1979	180		11.5	5.8		
351552111434401	A-22-06 26BDA3	No Match			6/26/1979	195		12.1	6.4		
351551111434701	A-22-06 26BDB1	608396			6/25/1979	180		11.4			
351552111434801	A-22-06 26BDB2	608397	0	35	5/22/1991	165	0.7		7.9		
351521111451301	A-22-06 27CCB	507596	25	80	2/23/1988	270	0.1				
351518111450401	A-22-06 27CCD	514901	40	102	2/22/1988	260	0.1		7.3		
351524111445601	A-22-06 27CDB4	623343			2/22/1988	220	0.1		7.6		
351517111445701	A-22-06 27CDC4	641822			2/23/1988	305	0.3				
351517111444301	A-22-06 27CDD	No Match			6/21/1979	260		12.8			
351527111443701	A-22-06 27DBC1	800701			6/21/1979	255		12.8			
351527111443701	A-22-06 27DBC1	800701			2/22/1988	295	0.2		7.3		
351530111443901	A-22-06 27DBC2	501605	120	165	2/22/1988	272	0.2				
351522111442201	A-22-06 27DCA	No Match			2/23/1988	352	0.1		7.8		
351521111443601	A-22-06 27DCB3	No Match			6/21/1979	220		13			
351518111443901	A-22-06 27DCC1	No Match			6/21/1979	380		11.2			
351518111443801	A-22-06 27DCC2	No Match			2/22/1988	400	0.2		7.2		
351523111441101	A-22-06 27DDA1	No Match	0	40	6/21/1979	415		9.5			

Search Area: T21-22N, R5-6E from the Hydrologic Basins of Canyon Diablo and Upper Verde
Search Criteria: 1980-Present, and all years for City of Flagstaff Woody Mountain Wells
Search Date: 12/12/2005

SAMPLE DATETIME	Hydro-logic Unit Code	Land Surface Elevation feet above sea level NGVD29	Depth of Well feet below land surface	Depth to water level, feet below LSD (72019)	Temper-ature, water, deg C -10	Specif. conduc-tance, wat unf uS/cm 25 degC -95	Specif. conduc-tance, wat unf lab, uS/cm 25 degC -90095	Residue water, fltrd, sum of consti-tuents mg/L (70301)	Dis-solved oxygen, mg/L -300	pH, water, unfltrd field, std units -400	ANC, wat unf fixed end pt, field, mg/L as CaCO3 -410	ANC, wat unf fixed end pt, lab, mg/L as CaCO3 -90410	Ammo-nia water, fltrd, mg/L as N -608	Nitrite water, fltrd, mg/L as N -613	Nitrite + nitrate water fltrd, mg/L as N -631	Ortho-phos-phate, water, fltrd, mg/L as P -671	Calcium water, fltrd, mg/L -915	Magnes-ium, water, fltrd, mg/L -925	Sodium, water, fltrd, mg/L -930	Potas-sium, water, fltrd, mg/L -935	Chlor-ide, water, fltrd, mg/L -940	Sulfate water, fltrd, mg/L -945	Fluor-ide, water, fltrd, mg/L -950	Silica, water, fltrd, mg/L -955	Arsenic water, fltrd, ug/L -1000	Barium, water, fltrd, ug/L -1005	Beryll-ium, water, fltrd, ug/L -1010	Boron, water, fltrd, ug/L -1020	Chrom-ium, water, fltrd, ug/L -1030	Cobalt water, fltrd, ug/L -1035	Copper, water, fltrd, ug/L -1040	Iron, water, fltrd, ug/L -1046	Lead, water, fltrd, ug/L -1049	Mangan-ese, water, fltrd, ug/L -1056	Molyb-denum, water, fltrd, ug/L -1060	Nickel, water, fltrd, ug/L -1065	Silver, water, fltrd, ug/L -1075	Stront-ium, water, fltrd, ug/L -1080	Vanad-ium, water, fltrd, ug/L -1085	Zinc, water, fltrd, ug/L -1090	Anti-mony, water, fltrd, ug/L -1095	Lithium water, fltrd, ug/L -1130	Selen-ium, water, fltrd, ug/L -1145	Bro-mide water, fltrd, mg/L (71870)
USGS 351330111475901 A-21-06 06CDD																																												
1949-08-17 00:00	15060202	7135	210			269		184			135						28	13	10*		5	1.6	0.6	44																					
1994-08-08 17:00	15060202	7135	210		16	380	401		6.8	8	185	188	0.02	< .010	1.1	0.04	41	17	16	1	9.6	9.1	0.2	42	1	51		< 10			< 1.0	< 3	< 1	3	< 1			300	8	120		< 4	< 1	0.19
USGS 351025111425201 A-21-06 25BCD, Reg. No. 55-511071																																												
This well is completed in the SUPAI FORMATION (310SUPI) local aquifer.																																												
6/13/1996 13:30	15020015	7050	1800		13.2	187	191		7.5	7.9		97	0.02	< .010	0.22	0.03	18	8.6	6.4	1.4	1.4	1.8	0.1	18	28	210	< .5	8.8	< 5	< 3	< 10	5	< 10	< 1.0	< 10	< 10	< 1	77	< 6	69	7	< 4	< 1	
USGS 350933111440801 A-21-06 35BCC, Reg. No. 55-606203, Woody Mountain																																												
This well is completed in the SUPAI FORMATION (310SUPI) local aquifer. Perforated 1300 - 1600 feet.																																												
1958-01-09 00:00	15020015	7130	1602	1213	11.5	836		505		10.1					0.14**		61	29	74*		5	39	0.6	89																					
1994-08-08 11:15	15020015	7130	1602		12	210	218		7.3	8	106	109	0.01	< .010	0.21	0.02	21	11	4.8	1.2	1.9	2.1	< .1	19	7	660		10			< 1.0	8	< 1	< 1.0	< 1			97	4	< 3		< 4	< 1	0.03
USGS 350924111440101 A-21-06 35CBA, Reg. No. 55-606201, Woody Mountain																																												
The flow rate of the well is 206 - 215 gpm, as of 1954																																												
This well is completed in the COCONINO SANDSTONE (310CCNN) local aquifer.																																												
1954-12-08 00:00	15020015	7140	1600	1267		229		140			119				0.16**		23	13	6.9*		2.5	2.5	0.2	20																					
1954-12-15 00:00	15020015	7140	1600	1295		222		138			115				0.16**		21	13	7.4*		3	2.3	0.2	21																					
1996-07-01 15:00	15020015	7140	1600		11.3	211	212		10.4	8		112	0.04	< .010	0.18	0.02	22	12	4.5	1.2	1.7	2.2	< .1	19	4	400	< .5	5.5	< 5	< 3	< 10	3	< 10	2	< 10	< 10	< 1	110	< 6	< 3	2	< 4	< 1	
USGS 350916111440801 A-21-06 35CCB, Reg. No. 55-606202, Woody Mountain																																												
This well is completed in the COCONINO SANDSTONE (310CCNN) local aquifer.																																												
1978-08-10 14:40	15020015	7167	1746		17	190		138		8	110		< .010		0.33		24	11	5.2	1.2	2.2	3.8	0.1	24	8	500			U	< 2	M	< 10		< 1			U			M			< 1	
USGS 350905111440801 A-21-06 35CCC, Reg. No 55-606204, Woody Mountain																																												
This well is completed in the COCONINO SANDSTONE (310CCNN) local aquifer. Perforated 1213 - 1518 feet.																																												
1958-04-03 00:00	15020015	7166	1530			288				8.2	146				0.23*		31	13	15*		5	9.1	0.3	56	218	1083																		
USGS 351716111520901 A-22-05 16DBC, Reg. No. 55-610507																																												
This well is completed in the VOLCANIC ROCKS (120VLCC) local aquifer.																																												
1978-06-02 00:00	15060202	7470	850		15	195		123		8	90				0.28	0.01	17	11	6.5	1.3	2.7	6.8	0.1	22				40				70		< 10									
1994-08-09 09:15	15060202	7470	850		9.5	181	198		6.8	8.2	94	96	0.01	< .010	0.24	0.05	17	10	5.9	1.2	1.8	4	0.1	23	< 1	7.0		10			< 1.0	< 3	1	< 1.0	< 1			87	3	66		< 4	< 1	0.01
1999-06-29 12:00	15060202	7470	850		10.5	194	196		7.4	8.3	93	95	< .02	< .010	0.37	0.06	17.9	10.6	5.9	1.22	2.42	3.8	< .1	22.3				E 13				< 10		< 3.0						52				
2000-06-20 12:30	15060202	7470	850		11	196	197		7.3	8.2	92	94	< .02	< .010	0.34	0.05	17.2	10.4	5.56	1.26	2.3	3.3	0.1	23.4				E 9.3				E 8		< 2.2						24				
2001-06-21 10:00	15060202	7470	850		11.5	196	196		8	8.1	91	93	< .01	< .010	0.38	0.04	18	10	5.7	1.2	2.4	4.2	< .1	22				10				41		< 1						33				
2002-06-25 10:30	15060202	7470	850		13	189	187		7.3	8.1	88	93	< .01	< .010	0.37	0.05	18	9.8	5.8	1.2	2.3	4	< .1	23				11				< 2		< 1						36				
USGS 351606111430601 A-22-06 25BBB																																												
7/24/1995 10:45	15020015	7339	220		10	200	171		5.9	7.7	48	51	< .01	< .010	4.9	0.09	13	6.4	6.4	4.3	6.2	4.5	0.1	46				< 10				8		< 1.0										

E	Estimated value
M	Verified, not quantified
U	Analyzed, not detected
*	Sodium + Potassium
**	Nitrate value only

Del Mar Analytical

17461 Derian Ave., Suite 100, Irvine, CA 92614 (949) 261-1022 FAX (949) 260-3297
1014 E. Cooley Dr., Suite A, Colton, CA 92324 (909) 370-4667 FAX (909) 370-1046
9484 Chesapeake Dr., Suite 805, San Diego, CA 92123 (858) 505-8596 FAX (858) 505-9689
9830 South 51st St., Suite B-120, Phoenix, AZ 85044 (480) 785-0043 FAX (480) 785-0851
2520 E. Sunset Rd. #3, Las Vegas, NV 89120 (702) 798-3620 FAX (702) 798-3621

LABORATORY REPORT

Prepared For: Hydro Systems, Inc.
1220 S. Park Lane
Tempe, AZ 85281
Attention: Phil Paski

Project:05-400

Sampled: 10/31/05
Received: 10/31/05
Issued: 11/30/05 14:03

NELAP #01109CA Arizona DHS#AZ0426

The results listed within this Laboratory Report pertain only to the samples tested in the laboratory. The analyses contained in this report were performed in accordance with the applicable certifications as noted. All soil samples are reported on a wet weight basis unless otherwise noted in the report. This Laboratory Report is confidential and is intended for the sole use of Del Mar Analytical and its client. This report shall not be reproduced, except in full, without written permission from Del Mar Analytical. The Chain of Custody, 1 page, is included and is an integral part of this report.
This entire report was reviewed and approved for release.

CASE NARRATIVE

LABORATORY ID	CLIENT ID	MATRIX
POJ0871-01	05400-206887-NS	Water
POJ0871-02	Trip Blank	Water

SAMPLE RECEIPT: Samples were received intact, at 0°C, on ice and with chain of custody documentation

HOLDING TIMES: N1: The holding time for this test is immediate. The laboratory measurement, therefore, cannot be used for compliance purposes.

PRESERVATION: Samples requiring preservation were verified prior to sample analysis

QA/QC CRITERIA: All analyses met method criteria, except as noted in the report with data qualifiers

COMMENTS: R1: The RPD exceeded the method control limit.

SUBCONTRACTED: Refer to the last page for specific subcontract laboratory information included in this report

Reviewed By:

Del Mar Analytical - Phoenix
Ken Baker
Project Manager

Del Mar Analytical

17461 Derian Ave., Suite 100, Irvine, CA 92614 (949) 261-1022 FAX (949) 260-3297
1014 E. Cooley Dr., Suite A, Colton, CA 92324 (909) 370-4667 FAX (909) 370-1046
9484 Chesapeake Dr., Suite 805, San Diego, CA 92123 (858) 505-8596 FAX (858) 505-9689
9830 South 51st St., Suite B-120, Phoenix, AZ 85044 (480) 785-0043 FAX (480) 785-0851
2520 E. Sunset Rd. #3, Las Vegas, NV 89120 (702) 798-3620 FAX (702) 798-3621

Hydro Systems, Inc.
1220 S. Park Lane
Tempe, AZ 85281
Attention: Phil Paski

Project ID: 05-400

Report Number: POJ0871

Sampled: 10/31/05
Received: 10/31/05

TOTAL RECOVERABLE METALS

Analyte	Method	Batch	Reporting Limit	Sample Result	Dilution Factor	Date Extracted	Date Analyzed	Data Qualifiers
Sample ID: POJ0871-01 (05400-206887-NS - Water)								
Reporting Units: mg/l								
Antimony	EPA 200.9	P5K0128	0.0040	ND	1	11/2/2005	11/8/2005	
Arsenic	EPA 200.9	P5K0128	0.0030	**0.0057**	1	11/2/2005	11/4/2005	
Barium	EPA 200.7	P5K0201	0.010	**0.17**	1	11/2/2005	11/4/2005	
Beryllium	EPA 200.7	P5K0201	0.0040	ND	1	11/2/2005	11/4/2005	
Cadmium	EPA 200.7	P5K0201	0.0050	ND	1	11/2/2005	11/4/2005	
Calcium	EPA 200.7	P5K0201	2.0	**25**	1	11/2/2005	11/4/2005	
Chromium	EPA 200.9	P5K0128	0.0040	**0.0040**	1	11/2/2005	11/14/2005	
Copper	EPA 200.7	P5K0201	0.020	ND	1	11/2/2005	11/4/2005	
Iron	EPA 200.7	P5K0201	0.20	**0.22**	1	11/2/2005	11/4/2005	
Lead	EPA 200.9	P5K0128	0.0020	ND	1	11/2/2005	11/7/2005	
Magnesium	EPA 200.7	P5K0201	0.50	**12**	1	11/2/2005	11/4/2005	
Manganese	EPA 200.7	P5K0201	0.020	ND	1	11/2/2005	11/4/2005	
Mercury	EPA 245.1	P5K0311	0.00020	ND	1	11/3/2005	11/3/2005	
Nickel	EPA 200.7	P5K0201	0.050	ND	1	11/2/2005	11/4/2005	
Potassium	EPA 258.1	P5K0124	2.0	**2.4**	2	11/2/2005	11/2/2005	
Selenium	EPA 200.9	P5K0128	0.0040	ND	1	11/2/2005	11/29/2005	
Silica	EPA 200.7	P5K0201	2.5	**14**	1	11/2/2005	11/4/2005	
Thallium	EPA 200.9	P5K0128	0.0020	ND	1	11/2/2005	11/11/2005	
Zinc	EPA 200.7	P5K0201	0.050	ND	1	11/2/2005	11/4/2005	
Sample ID: POJ0871-01RE1 (05400-206887-NS - Water)								
Reporting Units: mg/l								
Sodium	EPA 273.1	P5K1005	5.0	ND	1	11/10/2005	11/21/2005	

Del Mar Analytical - Phoenix
Ken Baker
Project Manager

The results pertain only to the samples tested in the laboratory. This report shall not be reproduced, except in full, without written permission from Del Mar Analytical.

Del Mar Analytical

17461 Derian Ave., Suite 100, Irvine, CA 92614 (949) 261-1022 FAX (949) 260-3297
1014 E. Cooley Dr., Suite A, Colton, CA 92324 (909) 370-4667 FAX (909) 370-1046
9484 Chesapeake Dr., Suite 805, San Diego, CA 92123 (858) 505-8596 FAX (858) 505-9689
9830 South 51st St., Suite B-120, Phoenix, AZ 85044 (480) 785-0043 FAX (480) 785-0851
2520 E. Sunset Rd. #3, Las Vegas, NV 89120 (702) 798-3620 FAX (702) 798-3621

[redacted]ydro Systems, Inc.
1220 S. Park Lane
Tempe, AZ 85281
Attention: Phil Paski

Project ID: 05-400

Report Number: POJ0871

Sampled: 10/31/05
Received: 10/31/05

INORGANICS

Analyte	Method	Batch	Reporting Limit	Sample Result	Dilution Factor	Date Extracted	Date Analyzed	Data Qualifiers
Sample ID: POJ0871-01 (05400-206887-NS - Water)								
Reporting Units: mg/l								
Alkalinity as CaCO3	SM2320B	P5K0315	5.0	**84**	1	11/3/2005	11/3/2005	
Calcium Hardness (CaCO3)	SM2340B	P5K0201	5.0	**62**	1	11/2/2005	11/4/2005	
Chloride	EPA 300.0	P5K0108	0.50	**2.4**	1	11/1/2005	11/1/2005	
Fluoride	EPA 300.0	P5K0108	0.10	ND	1	11/1/2005	11/1/2005	
Nitrate/Nitrite-N	EPA 300.0	P5K0108	0.20	ND	1	11/1/2005	11/1/2005	
Nitrate-N	EPA 300.0	P5K0108	0.10	**0.17**	1	11/1/2005	11/1/2005	
Nitrite-N	EPA 300.0	P5K0108	0.10	ND	1	11/1/2005	11/1/2005	
Total Dissolved Solids	SM2540C	P5K0204	20	**100**	1	11/2/2005	11/2/2005	
Sample ID: POJ0871-01 (05400-206887-NS - Water)								
Reporting Units: NTU								
Turbidity	EPA 180.1	P5K0103	1.0	**22**	1	11/1/2005	11/1/2005	
Sample ID: POJ0871-01 (05400-206887-NS - Water)								
Reporting Units: pH Units								
[redacted]	EPA 150.1	P5K0115	NA	**8.08**	1	11/1/2005	11/1/2005	N1
[redacted]p. at time of pH Analysis (°C)	EPA 150.1	P5K0115	NA	**18.3**	1	11/1/2005	11/1/2005	N1
Sample ID: POJ0871-01 (05400-206887-NS - Water)								
Reporting Units: umhos/cm								
Specific Conductance	SM2510B	P5K0310	1.0	**180**	1	11/3/2005	11/3/2005	
Sample ID: POJ0871-01RE2 (05400-206887-NS - Water)								
Reporting Units: mg/l								
Sulfate	EPA 300.0	P5K0205	0.50	**1.4**	1	11/2/2005	11/2/2005	

[redacted]

Del Mar Analytical - Phoenix
Ken Baker
Project Manager

The results pertain only to the samples tested in the laboratory. This report shall not be reproduced, except in full, without written permission from Del Mar Analytical.

Del Mar Analytical

17461 Derian Ave., Suite 100, Irvine, CA 92614 (949) 261-1022 FAX (949) 260-3297
1014 E. Cooley Dr., Suite A, Colton, CA 92324 (909) 370-4667 FAX (909) 370-1046
9484 Chesapeake Dr., Suite 805, San Diego, CA 92123 (858) 505-8596 FAX (858) 505-9689
9830 South 51st St., Suite B-120, Phoenix, AZ 85044 (480) 785-0043 FAX (480) 785-0851
2520 E. Sunset Rd. #3, Las Vegas, NV 89120 (702) 798-3620 FAX (702) 798-3621

Hydro Systems, Inc.
1220 S. Park Lane
Tempe, AZ 85281
Attention: Phil Paski

Project ID: 05-400

Report Number: POJ0871

Sampled: 10/31/05
Received: 10/31/05

LANGLIER SATURATION INDEX

Analyte	Method	Batch	Reporting Limit	Sample Result	Dilution Factor	Date Extracted	Date Analyzed	Data Qualifiers
Sample ID: POJ0871-01 (05400-206887-NS - Water)								
Reporting Units: SI Units								
Langlier Index	SM2330B	P5K1609	NA	**-0.60**	1	11/16/2005	11/16/2005	-

Del Mar Analytical - Phoenix
Ken Baker
Project Manager

The results pertain only to the samples tested in the laboratory. This report shall not be reproduced, except in full, without written permission from Del Mar Analytical.

Del Mar Analytical

17461 Derian Ave., Suite 100, Irvine, CA 92614 (949) 261-1022 FAX (949) 260-3297
1014 E. Cooley Dr., Suite A, Colton, CA 92324 (909) 370-4667 FAX (909) 370-1046
9484 Chesapeake Dr., Suite 805, San Diego, CA 92123 (858) 505-8596 FAX (858) 505-9689
9830 South 51st St., Suite B-120, Phoenix, AZ 85044 (480) 785-0043 FAX (480) 785-0851
2520 E. Sunset Rd. #3, Las Vegas, NV 89120 (702) 798-3620 FAX (702) 798-3621

ydro Systems, Inc.
220 S. Park Lane
Tempe, AZ 85281
Attention: Phil Paski

Project ID: 05-400

Report Number: POJ0871

Sampled: 10/31/05
Received: 10/31/05

MICROBIOLOGICALS

Analyte	Method	Batch	Reporting Limit	Sample Result	Dilution Factor	Date Extracted	Date Analyzed	Data Qualifiers
Sample ID: POJ0871-01 (05400-206887-NS - Water)								
Reporting Units: Present/Absent								
E. Coli	SM9223B	P5K0111	1.0	Absent	1	10/31/2005	11/1/2005	
Total Coliform	SM9223B	P5K0111	1.0	Absent	1	10/31/2005	11/1/2005	

Del Mar Analytical - Phoenix
Ken Baker
Project Manager

The results pertain only to the samples tested in the laboratory. This report shall not be reproduced, except in full, without written permission from Del Mar Analytical.

Del Mar Analytical

17461 Derian Ave., Suite 100, Irvine, CA 92614 (949) 261-1022 FAX (949) 260-3297
1014 E. Cooley Dr., Suite A, Colton, CA 92324 (909) 370-4667 FAX (909) 370-1046
9484 Chesapeake Dr., Suite 805, San Diego, CA 92123 (858) 505-8596 FAX (858) 505-9689
9830 South 51st St., Suite B-120, Phoenix, AZ 85044 (480) 785-0043 FAX (480) 785-0851
2520 E. Sunset Rd. #3, Las Vegas, NV 89120 (702) 798-3620 FAX (702) 798-3621

ydro Systems, Inc.
1220 S. Park Lane
Tempe, AZ 85281
Attention: Phil Paski

Project ID: 05-400

Report Number: POJ0871

Sampled: 10/31/05
Received: 10/31/05

METALS

Analyte	Method	Batch	Reporting Limit	Sample Result	Dilution Factor	Date Extracted	Date Analyzed	Data Qualifiers
Sample ID: POJ0871-01 (05400-206887-NS - Water)								
Reporting Units: mg/l								
Sodium	EPA 200.7	5K01106	0.50	**4.9**	1	11/1/2005	11/2/2005	

Del Mar Analytical - Phoenix
Ken Baker
Project Manager

The results pertain only to the samples tested in the laboratory. This report shall not be reproduced, except in full, without written permission from Del Mar Analytical.

Del Mar Analytical

17461 Derian Ave., Suite 100, Irvine, CA 92614 (949) 261-1022 FAX (949) 260-3297
1014 E. Cooley Dr., Suite A, Colton, CA 92324 (909) 370-4667 FAX (909) 370-1046
9484 Chesapeake Dr., Suite 805, San Diego, CA 92123 (858) 505-8596 FAX (858) 505-9689
9830 South 51st St., Suite B-120, Phoenix, AZ 85044 (480) 785-0043 FAX (480) 785-0851
2520 E. Sunset Rd. #3, Las Vegas, NV 89120 (702) 798-3620 FAX (702) 798-3621

ydro Systems, Inc.
1220 S. Park Lane
Tempe, AZ 85281
Attention: Phil Paski

Project ID: 05-400

Report Number: POJ0871

Sampled: 10/31/05
Received: 10/31/05

INORGANICS

Analyte	Method	Batch	Reporting Limit	Sample Result	Dilution Factor	Date Extracted	Date Analyzed	Data Qualifiers
Sample ID: POJ0871-01 (05400-206887-NS - Water)								
Reporting Units: mg/l								
Amenable Cyanide	SM4500-CN-G	5K07095	0.020	ND	1	11/7/2005	11/7/2005	

Del Mar Analytical - Phoenix
Ken Baker
Project Manager

The results pertain only to the samples tested in the laboratory. This report shall not be reproduced, except in full, without written permission from Del Mar Analytical.

Del Mar Analytical

17461 Derian Ave., Suite 100, Irvine, CA 92614 (949) 261-1022 FAX (949) 260-3297
1014 E. Cooley Dr., Suite A, Colton, CA 92324 (909) 370-4667 FAX (909) 370-1046
9484 Chesapeake Dr., Suite 805, San Diego, CA 92123 (858) 505-8596 FAX (858) 505-9689
9830 South 51st St., Suite B-120, Phoenix, AZ 85044 (480) 785-0043 FAX (480) 785-0851
2520 E. Sunset Rd. #3, Las Vegas, NV 89120 (702) 798-3620 FAX (702) 798-3621

[redacted]ydro Systems, Inc.
1220 S. Park Lane
Tempe, AZ 85281
Attention: Phil Paski

Project ID: 05-400

Report Number: POJ0871

Sampled: 10/31/05
Received: 10/31/05

PURGEABLE ORGANIC COMPOUNDS BY GC/MS (EPA 524.2)

Analyte	Method	Batch	Reporting Limit	Sample Result	Dilution Factor	Date Extracted	Date Analyzed	Data Qualifiers
Sample ID: POJ0871-01 (05400-206887-NS - Water)								
Reporting Units: mg/l								
Benzene	EPA 524.2	C5K0126	0.00050	ND	1	11/1/2005	11/2/2005	
Bromodichloromethane	EPA 524.2	C5K0126	0.00050	ND	1	11/1/2005	11/2/2005	
Bromoform	EPA 524.2	C5K0126	0.00050	ND	1	11/1/2005	11/2/2005	
Carbon tetrachloride	EPA 524.2	C5K0126	0.00050	ND	1	11/1/2005	11/2/2005	
Chlorobenzene	EPA 524.2	C5K0126	0.00050	ND	1	11/1/2005	11/2/2005	
Chloroform	EPA 524.2	C5K0126	0.00050	ND	1	11/1/2005	11/2/2005	
Dibromochloromethane	EPA 524.2	C5K0126	0.00050	ND	1	11/1/2005	11/2/2005	
1,2-Dichlorobenzene	EPA 524.2	C5K0126	0.00050	ND	1	11/1/2005	11/2/2005	
1,4-Dichlorobenzene	EPA 524.2	C5K0126	0.00050	ND	1	11/1/2005	11/2/2005	
1,2-Dichloroethane	EPA 524.2	C5K0126	0.00050	ND	1	11/1/2005	11/2/2005	
1,1-Dichloroethene	EPA 524.2	C5K0126	0.00050	ND	1	11/1/2005	11/2/2005	
cis-1,2-Dichloroethene	EPA 524.2	C5K0126	0.00050	ND	1	11/1/2005	11/2/2005	
trans-1,2-Dichloroethene	EPA 524.2	C5K0126	0.00050	ND	1	11/1/2005	11/2/2005	
1,2-Dichloropropane	EPA 524.2	C5K0126	0.00050	ND	1	11/1/2005	11/2/2005	
[redacted]lbenzene	EPA 524.2	C5K0126	0.00050	ND	1	11/1/2005	11/2/2005	
[redacted]hylene chloride	EPA 524.2	C5K0126	0.00050	ND	1	11/1/2005	11/2/2005	
Styrene	EPA 524.2	C5K0126	0.00050	ND	1	11/1/2005	11/2/2005	
Tetrachloroethene	EPA 524.2	C5K0126	0.00050	ND	1	11/1/2005	11/2/2005	
Toluene	EPA 524.2	C5K0126	0.00050	ND	1	11/1/2005	11/2/2005	
1,2,4-Trichlorobenzene	EPA 524.2	C5K0126	0.00050	ND	1	11/1/2005	11/2/2005	
1,1,1-Trichloroethane	EPA 524.2	C5K0126	0.00050	ND	1	11/1/2005	11/2/2005	
1,1,2-Trichloroethane	EPA 524.2	C5K0126	0.00050	ND	1	11/1/2005	11/2/2005	
Trichloroethene	EPA 524.2	C5K0126	0.00050	ND	1	11/1/2005	11/2/2005	
Vinyl chloride	EPA 524.2	C5K0126	0.00050	ND	1	11/1/2005	11/2/2005	
m,p-Xylenes	EPA 524.2	C5K0126	0.00050	ND	1	11/1/2005	11/2/2005	
o-Xylene	EPA 524.2	C5K0126	0.00050	ND	1	11/1/2005	11/2/2005	
Xylenes, Total	EPA 524.2	C5K0126	0.0015	ND	1	11/1/2005	11/2/2005	
Trihalomethanes, Total	EPA 524.2	C5K0126	0.00050	**<0.0005**	1	11/1/2005	11/2/2005	
Surrogate: 4-Bromofluorobenzene (70-130%)				*79 %*				
Surrogate: 1,2-Dichlorobenzene-d4 (70-130%)				*87 %*				

[redacted]

Del Mar Analytical - Phoenix
Ken Baker
Project Manager

The results pertain only to the samples tested in the laboratory. This report shall not be reproduced, except in full, without written permission from Del Mar Analytical.

Del Mar Analytical

17461 Derian Ave., Suite 100, Irvine, CA 92614 (949) 261-1022 FAX (949) 260-3297
1014 E. Cooley Dr., Suite A, Colton, CA 92324 (909) 370-4667 FAX (909) 370-1046
9484 Chesapeake Dr., Suite 805, San Diego, CA 92123 (858) 505-8596 FAX (858) 505-9689
9830 South 51st St., Suite B-120, Phoenix, AZ 85044 (480) 785-0043 FAX (480) 785-0851
2520 E. Sunset Rd. #3, Las Vegas, NV 89120 (702) 798-3620 FAX (702) 798-3621

Hydro Systems, Inc.
1220 S. Park Lane
Tempe, AZ 85281
Attention: Phil Paski

Project ID: 05-400

Report Number: POJ0871

Sampled: 10/31/05
Received: 10/31/05

PURGEABLE ORGANIC COMPOUNDS BY GC/MS (EPA 524.2)

Analyte	Method	Batch	Reporting Limit	Sample Result	Dilution Factor	Date Extracted	Date Analyzed	Data Qualifiers
Sample ID: POJ0871-02 (Trip Blank - Water)								
Reporting Units: mg/l								
Benzene	EPA 524.2	C5K0125	0.00050	ND	1	11/1/2005	11/2/2005	
Bromodichloromethane	EPA 524.2	C5K0125	0.00050	ND	1	11/1/2005	11/2/2005	
Bromoform	EPA 524.2	C5K0125	0.00050	ND	1	11/1/2005	11/2/2005	
Carbon tetrachloride	EPA 524.2	C5K0125	0.00050	ND	1	11/1/2005	11/2/2005	
Chlorobenzene	EPA 524.2	C5K0125	0.00050	ND	1	11/1/2005	11/2/2005	
Chloroform	EPA 524.2	C5K0125	0.00050	ND	1	11/1/2005	11/2/2005	
Dibromochloromethane	EPA 524.2	C5K0125	0.00050	ND	1	11/1/2005	11/2/2005	
1,2-Dichlorobenzene	EPA 524.2	C5K0125	0.00050	ND	1	11/1/2005	11/2/2005	
1,4-Dichlorobenzene	EPA 524.2	C5K0125	0.00050	ND	1	11/1/2005	11/2/2005	
1,2-Dichloroethane	EPA 524.2	C5K0125	0.00050	ND	1	11/1/2005	11/2/2005	
1,1-Dichloroethene	EPA 524.2	C5K0125	0.00050	ND	1	11/1/2005	11/2/2005	
cis-1,2-Dichloroethene	EPA 524.2	C5K0125	0.00050	ND	1	11/1/2005	11/2/2005	
trans-1,2-Dichloroethene	EPA 524.2	C5K0125	0.00050	ND	1	11/1/2005	11/2/2005	
1,2-Dichloropropane	EPA 524.2	C5K0125	0.00050	ND	1	11/1/2005	11/2/2005	
[illegible]lbenzene	EPA 524.2	C5K0125	0.00050	ND	1	11/1/2005	11/2/2005	
[illegible]hylene chloride	EPA 524.2	C5K0125	0.00050	ND	1	11/1/2005	11/2/2005	
Styrene	EPA 524.2	C5K0125	0.00050	ND	1	11/1/2005	11/2/2005	
Tetrachloroethene	EPA 524.2	C5K0125	0.00050	ND	1	11/1/2005	11/2/2005	
Toluene	EPA 524.2	C5K0125	0.00050	ND	1	11/1/2005	11/2/2005	
1,2,4-Trichlorobenzene	EPA 524.2	C5K0125	0.00050	ND	1	11/1/2005	11/2/2005	
1,1,1-Trichloroethane	EPA 524.2	C5K0125	0.00050	ND	1	11/1/2005	11/2/2005	
1,1,2-Trichloroethane	EPA 524.2	C5K0125	0.00050	ND	1	11/1/2005	11/2/2005	
Trichloroethene	EPA 524.2	C5K0125	0.00050	ND	1	11/1/2005	11/2/2005	
Vinyl chloride	EPA 524.2	C5K0125	0.00050	ND	1	11/1/2005	11/2/2005	
m,p-Xylenes	EPA 524.2	C5K0125	0.00050	ND	1	11/1/2005	11/2/2005	
o-Xylene	EPA 524.2	C5K0125	0.00050	ND	1	11/1/2005	11/2/2005	
Xylenes, Total	EPA 524.2	C5K0125	0.0015	ND	1	11/1/2005	11/2/2005	
Trihalomethanes, Total	EPA 524.2	C5K0125	0.00050	**<0.0005**	1	11/1/2005	11/2/2005	
Surrogate: 4-Bromofluorobenzene (70-130%)				*84 %*				
Surrogate: 1,2-Dichlorobenzene-d4 (70-130%)				*88 %*				

Del Mar Analytical - Phoenix
Ken Baker
Project Manager

The results pertain only to the samples tested in the laboratory. This report shall not be reproduced, except in full, without written permission from Del Mar Analytical.

Del Mar Analytical

17461 Derian Ave., Suite 100, Irvine, CA 92614 (949) 261-1022 FAX (949) 260-3297
1014 E. Cooley Dr., Suite A, Colton, CA 92324 (909) 370-4667 FAX (909) 370-1046
9484 Chesapeake Dr., Suite 805, San Diego, CA 92123 (858) 505-8596 FAX (858) 505-9689
9830 South 51st St., Suite B-120, Phoenix, AZ 85044 (480) 785-0043 FAX (480) 785-0851
2520 E. Sunset Rd. #3, Las Vegas, NV 89120 (702) 798-3620 FAX (702) 798-3621

Hydro Systems, Inc.
1220 S. Park Lane
Tempe, AZ 85281
Attention: Phil Paski

Project ID: 05-400

Report Number: POJ0871

Sampled: 10/31/05
Received: 10/31/05

EDB AND DBCP IN WATER BY GC/ECD (EPA 504.1)

Analyte	Method	Batch	Reporting Limit	Sample Result	Dilution Factor	Date Extracted	Date Analyzed	Data Qualifiers
Sample ID: POJ0871-01 (05400-206887-NS - Water)								
Reporting Units: mg/l								
1,2-Dibromoethane (EDB)	EPA 504.1	C5K0317	0.000010	ND	1	11/3/2005	11/4/2005	
1,2-Dibromo-3-chloropropane	EPA 504.1	C5K0317	0.000020	ND	1	11/3/2005	11/4/2005	
Surrogate: 4-Bromofluorobenzene (65-170%)				*122 %*				
Sample ID: POJ0871-02 (Trip Blank - Water)								
Reporting Units: mg/l								
1,2-Dibromoethane (EDB)	EPA 504.1	C5K0317	0.000010	ND	1	11/3/2005	11/4/2005	
1,2-Dibromo-3-chloropropane	EPA 504.1	C5K0317	0.000020	ND	1	11/3/2005	11/4/2005	
Surrogate: 4-Bromofluorobenzene (65-170%)				*121 %*				

Del Mar Analytical - Phoenix
Ken Baker
Project Manager

The results pertain only to the samples tested in the laboratory. This report shall not be reproduced, except in full, without written permission from Del Mar Analytical.

Del Mar Analytical

17461 Derian Ave., Suite 100, Irvine, CA 92614 (949) 261-1022 FAX (949) 260-3297
1014 E. Cooley Dr., Suite A, Colton, CA 92324 (909) 370-4667 FAX (909) 370-1046
9484 Chesapeake Dr., Suite 805, San Diego, CA 92123 (858) 505-8596 FAX (858) 505-9689
9830 South 51st St., Suite B-120, Phoenix, AZ 85044 (480) 785-0043 FAX (480) 785-0851
2520 E. Sunset Rd. #3, Las Vegas, NV 89120 (702) 798-3620 FAX (702) 798-3621

Hydro Systems, Inc.
1220 S. Park Lane
Tempe, AZ 85281
Attention: Phil Paski

Project ID: 05-400

Report Number: POJ0871

Sampled: 10/31/05
Received: 10/31/05

ORGANIC COMPOUNDS BY GC/MS (EPA 525.2)

Analyte	Method	Batch	Reporting Limit	Sample Result	Dilution Factor	Date Extracted	Date Analyzed	Data Qualifiers
Sample ID: POJ0871-01 (05400-206887-NS - Water)								
Reporting Units: mg/l								
Alachlor	EPA 525.2	C5K0704	0.00020	ND	1	11/7/2005	11/9/2005	
Atrazine	EPA 525.2	C5K0704	0.00010	ND	1	11/7/2005	11/9/2005	
Benzo(a)pyrene	EPA 525.2	C5K0704	0.000020	ND	1	11/7/2005	11/9/2005	
Di(2-ethylhexyl)adipate	EPA 525.2	C5K0704	0.00060	ND	1	11/7/2005	11/9/2005	
Di(2-ethylhexyl)phthalate	EPA 525.2	C5K0704	0.00060	ND	1	11/7/2005	11/9/2005	
Hexachlorobenzene	EPA 525.2	C5K0704	0.00010	ND	1	11/7/2005	11/9/2005	
Hexachlorocyclopentadiene	EPA 525.2	C5K0704	0.00010	ND	1	11/7/2005	11/9/2005	
Simazine	EPA 525.2	C5K0704	0.000070	ND	1	11/7/2005	11/9/2005	
Surrogate: 1,3-Dimethyl-2-nitrobenzene (70-130%)				*110 %*				
Surrogate: Triphenylphosphate (70-130%)				*120 %*				
Surrogate: Perylene-d12 (70-130%)				*86 %*				

Del Mar Analytical - Phoenix
Ken Baker
Project Manager

The results pertain only to the samples tested in the laboratory. This report shall not be reproduced, except in full, without written permission from Del Mar Analytical.

Del Mar Analytical

17461 Derian Ave., Suite 100, Irvine, CA 92614 (949) 261-1022 FAX (949) 260-3297
1014 E. Cooley Dr., Suite A, Colton, CA 92324 (909) 370-4667 FAX (909) 370-1046
9484 Chesapeake Dr., Suite 805, San Diego, CA 92123 (858) 505-8596 FAX (858) 505-9689
9830 South 51st St., Suite B-120, Phoenix, AZ 85044 (480) 785-0043 FAX (480) 785-0851
2520 E. Sunset Rd. #3, Las Vegas, NV 89120 (702) 798-3620 FAX (702) 798-3621

ydro Systems, Inc.
1220 S. Park Lane
Tempe, AZ 85281
Attention: Phil Paski

Project ID: 05-400

Report Number: POJ0871

Sampled: 10/31/05
Received: 10/31/05

CHLORINATED ACIDS (EPA 515.4)

Analyte	Method	Batch	Reporting Limit	Sample Result	Dilution Factor	Date Extracted	Date Analyzed	Data Qualifiers
Sample ID: POJ0871-01 (05400-206887-NS - Water)								
Reporting Units: mg/l								
2,4-D	EPA 515.4	C5K0903	0.00010	ND	1	11/9/2005	11/9/2005	
Dalapon	EPA 515.4	C5K0903	0.0010	ND	1	11/9/2005	11/9/2005	
Dinoseb	EPA 515.4	C5K0903	0.00020	ND	1	11/9/2005	11/9/2005	
Pentachlorophenol	EPA 515.4	C5K0903	0.000040	ND	1	11/9/2005	11/9/2005	
Picloram	EPA 515.4	C5K0903	0.00010	ND	1	11/9/2005	11/9/2005	
2,4,5-TP (Silvex)	EPA 515.4	C5K0903	0.00020	ND	1	11/9/2005	11/9/2005	
Surrogate: 2,4-Dichlorophenylacetic acid (70-130%)				*88 %*				

Del Mar Analytical - Phoenix
Ken Baker
Project Manager

The results pertain only to the samples tested in the laboratory. This report shall not be reproduced, except in full, without written permission from Del Mar Analytical.

Del Mar Analytical

17461 Derian Ave., Suite 100, Irvine, CA 92614 (949) 261-1022 FAX (949) 260-3297
1014 E. Cooley Dr., Suite A, Colton, CA 92324 (909) 370-4667 FAX (909) 370-1046
9484 Chesapeake Dr., Suite 805, San Diego, CA 92123 (858) 505-8596 FAX (858) 505-9689
9830 South 51st St., Suite B-120, Phoenix, AZ 85044 (480) 785-0043 FAX (480) 785-0851
2520 E. Sunset Rd. #3, Las Vegas, NV 89120 (702) 798-3620 FAX (702) 798-3621

dro Systems, Inc.
1220 S. Park Lane
Tempe, AZ 85281
Attention: Phil Paski

Project ID: 05-400

Report Number: POJ0871

Sampled: 10/31/05
Received: 10/31/05

CARBAMATES/CARBAMOXYLOXIME PESTICIDES BY HPLC (EPA 531.1)

Analyte	Method	Batch	Reporting Limit	Sample Result	Dilution Factor	Date Extracted	Date Analyzed	Data Qualifiers
Sample ID: POJ0871-01 (05400-206887-NS - Water)								
Reporting Units: mg/l								
Aldicarb Sulfoxide	EPA 531.1	C5K0824	0.00050	ND	1	11/8/2005	11/9/2005	
Aldicarb Sulfone	EPA 531.1	C5K0824	0.00080	ND	1	11/8/2005	11/9/2005	
Oxamyl	EPA 531.1	C5K0824	0.0020	ND	1	11/8/2005	11/9/2005	
Methomyl	EPA 531.1	C5K0824	0.0010	ND	1	11/8/2005	11/9/2005	
3-Hydroxycarbofuran	EPA 531.1	C5K0824	0.0010	ND	1	11/8/2005	11/9/2005	
Aldicarb	EPA 531.1	C5K0824	0.00050	ND	1	11/8/2005	11/9/2005	
Carbofuran	EPA 531.1	C5K0824	0.00090	ND	1	11/8/2005	11/9/2005	
Carbaryl	EPA 531.1	C5K0824	0.0010	ND	1	11/8/2005	11/9/2005	

Del Mar Analytical - Phoenix
Ken Baker
Project Manager

The results pertain only to the samples tested in the laboratory. This report shall not be reproduced, except in full, without written permission from Del Mar Analytical.

Del Mar Analytical

17461 Derian Ave., Suite 100, Irvine, CA 92614 (949) 261-1022 FAX (949) 260-3297
1014 E. Cooley Dr., Suite A, Colton, CA 92324 (909) 370-4667 FAX (909) 370-1046
9484 Chesapeake Dr., Suite 805, San Diego, CA 92123 (858) 505-8596 FAX (858) 505-9689
9830 South 51st St., Suite B-120, Phoenix, AZ 85044 (480) 785-0043 FAX (480) 785-0851
2520 E. Sunset Rd. #3, Las Vegas, NV 89120 (702) 798-3620 FAX (702) 798-3621

dro Systems, Inc.
1220 S. Park Lane
Tempe, AZ 85281
Attention: Phil Paski

Project ID: 05-400

Report Number: POJ0871

Sampled: 10/31/05
Received: 10/31/05

ENDOTHALL (EPA 548.1)

Analyte	Method	Batch	Reporting Limit	Sample Result	Dilution Factor	Date Extracted	Date Analyzed	Data Qualifiers
Sample ID: POJ0871-01 (05400-206887-NS - Water)								
Reporting Units: mg/l								
Endothall	EPA 548.1	C5K0316	0.0090	ND	1	11/3/2005	11/3/2005	

Del Mar Analytical - Phoenix
Ken Baker
Project Manager

The results pertain only to the samples tested in the laboratory. This report shall not be reproduced, except in full, without written permission from Del Mar Analytical.

Del Mar Analytical

17461 Derian Ave., Suite 100, Irvine, CA 92614 (949) 261-1022 FAX (949) 260-3297
1014 E. Cooley Dr., Suite A, Colton, CA 92324 (909) 370-4667 FAX (909) 370-1046
9484 Chesapeake Dr., Suite 805, San Diego, CA 92123 (858) 505-8596 FAX (858) 505-9689
9830 South 51st St., Suite B-120, Phoenix, AZ 85044 (480) 785-0043 FAX (480) 785-0851
2520 E. Sunset Rd. #3, Las Vegas, NV 89120 (702) 798-3620 FAX (702) 798-3621

dro Systems, Inc.
220 S. Park Lane
Tempe, AZ 85281
Attention: Phil Paski

Project ID: 05-400

Report Number: POJ0871

Sampled: 10/31/05
Received: 10/31/05

GLYPHOSATE (EPA 547)

Analyte	Method	Batch	Reporting Limit	Sample Result	Dilution Factor	Date Extracted	Date Analyzed	Data Qualifiers
Sample ID: POJ0871-01 (05400-206887-NS - Water)								
Reporting Units: mg/l								
Glyphosate	EPA 547	C5K0124	0.0060	ND	1	11/1/2005	11/2/2005	

Del Mar Analytical - Phoenix
Ken Baker
Project Manager

The results pertain only to the samples tested in the laboratory. This report shall not be reproduced, except in full, without written permission from Del Mar Analytical.

Del Mar Analytical

17461 Derian Ave., Suite 100, Irvine, CA 92614 (949) 261-1022 FAX (949) 260-3297
1014 E. Cooley Dr., Suite A, Colton, CA 92324 (909) 370-4667 FAX (909) 370-1046
9484 Chesapeake Dr., Suite 805, San Diego, CA 92123 (858) 505-8596 FAX (858) 505-9689
9830 South 51st St., Suite B-120, Phoenix, AZ 85044 (480) 785-0043 FAX (480) 785-0851
2520 E. Sunset Rd. #3, Las Vegas, NV 89120 (702) 798-3620 FAX (702) 798-3621

dro Systems, Inc.
1220 S. Park Lane
Tempe, AZ 85281
Attention: Phil Paski

Project ID: 05-400

Report Number: POJ0871

Sampled: 10/31/05
Received: 10/31/05

DIQUAT (EPA 549.2)

Analyte	Method	Batch	Reporting Limit	Sample Result	Dilution Factor	Date Extracted	Date Analyzed	Data Qualifiers
Sample ID: POJ0871-01 (05400-206887-NS - Water)								
Reporting Units: mg/l								
Diquat	EPA 549.2	C5K0120	0.00040	ND	1	11/3/2005	11/3/2005	

Del Mar Analytical - Phoenix
Ken Baker
Project Manager

The results pertain only to the samples tested in the laboratory. This report shall not be reproduced, except in full, without written permission from Del Mar Analytical.

Del Mar Analytical

17461 Derian Ave., Suite 100, Irvine, CA 92614 (949) 261-1022 FAX (949) 260-3297
1014 E. Cooley Dr., Suite A, Colton, CA 92324 (909) 370-4667 FAX (909) 370-1046
9484 Chesapeake Dr., Suite 805, San Diego, CA 92123 (858) 505-8596 FAX (858) 505-9689
9830 South 51st St., Suite B-120, Phoenix, AZ 85044 (480) 785-0043 FAX (480) 785-0851
2520 E. Sunset Rd. #3, Las Vegas, NV 89120 (702) 798-3620 FAX (702) 798-3621

ydro Systems, Inc.
1220 S. Park Lane
Tempe, AZ 85281
Attention: Phil Paski

Project ID: 05-400

Report Number: POJ0871

Sampled: 10/31/05
Received: 10/31/05

SHORT HOLD TIME DETAIL REPORT

	Hold Time (in days)	Date/Time Sampled	Date/Time Received	Date/Time Extracted	Date/Time Analyzed
Sample ID: 05400-206887-NS (POJ0871-01) - Water					
EPA 150.1	1	10/31/2005 10:00	10/31/2005 13:20	11/01/2005 07:30	11/01/2005 12:16
EPA 180.1	2	10/31/2005 10:00	10/31/2005 13:20	11/01/2005 07:46	11/01/2005 07:49
EPA 300.0	2	10/31/2005 10:00	10/31/2005 13:20	11/01/2005 13:00	11/01/2005 14:52
SM9223B	1	10/31/2005 10:00	10/31/2005 13:20	10/31/2005 14:36	11/01/2005 14:41

Del Mar Analytical - Phoenix
Ken Baker
Project Manager

The results pertain only to the samples tested in the laboratory. This report shall not be reproduced, except in full, without written permission from Del Mar Analytical.

Del Mar Analytical

17461 Derian Ave., Suite 100, Irvine, CA 92614 (949) 261-1022 FAX (949) 260-3297
1014 E. Cooley Dr., Suite A, Colton, CA 92324 (909) 370-4667 FAX (909) 370-1046
9484 Chesapeake Dr., Suite 805, San Diego, CA 92123 (858) 505-8596 FAX (858) 505-9689
9830 South 51st St., Suite B-120, Phoenix, AZ 85044 (480) 785-0043 FAX (480) 785-0851
2520 E. Sunset Rd. #3, Las Vegas, NV 89120 (702) 798-3620 FAX (702) 798-3621

[redacted]dro Systems, Inc.
1220 S. Park Lane
Tempe, AZ 85281
Attention: Phil Paski

Project ID: 05-400

Report Number: POJ0871

Sampled: 10/31/05
Received: 10/31/05

METHOD BLANK/QC DATA

TOTAL RECOVERABLE METALS

Analyte	Result	Reporting Limit	Units	Spike Level	Source Result	%REC	%REC Limits	RPD	RPD Limit	Data Qualifiers
Batch: P5K0124 Extracted: 11/02/05										
Blank Analyzed: 11/02/2005 (P5K0124-BLK1)										
Potassium	ND	1.0	mg/l							
LCS Analyzed: 11/02/2005 (P5K0124-BS1)										
Potassium	11.0	2.0	mg/l	10.0		110	85-115			
LCS Dup Analyzed: 11/02/2005 (P5K0124-BSD1)										
Potassium	11.4	2.0	mg/l	10.0		114	85-115	4	15	
Matrix Spike Analyzed: 11/02/2005 (P5K0124-MS1)					**Source: POJ0871-01**					
Potassium	12.8	2.0	mg/l	10.0	2.4	104	85-115			
[redacted]ix Spike Dup Analyzed: 11/02/2005 (P5K0124-MSD1)					**Source: POJ0871-01**					
Potassium	13.0	2.0	mg/l	10.0	2.4	106	85-115	2	15	
Batch: P5K0128 Extracted: 11/02/05										
Blank Analyzed: 11/04/2005-11/29/2005 (P5K0128-BLK1)										
Antimony	ND	0.0040	mg/l							
Arsenic	ND	0.0030	mg/l							
Chromium	ND	0.0040	mg/l							
Lead	ND	0.0020	mg/l							
Selenium	ND	0.0040	mg/l							
Thallium	ND	0.0020	mg/l							
LCS Analyzed: 11/03/2005-11/29/2005 (P5K0128-BS1)										
Antimony	0.0201	0.0040	mg/l	0.0200		100	85-115			
Arsenic	0.0206	0.0030	mg/l	0.0200		103	85-115			
Chromium	0.0183	0.0040	mg/l	0.0200		92	85-115			
Lead	0.0195	0.0020	mg/l	0.0200		98	85-115			
Selenium	0.0206	0.0040	mg/l	0.0200		103	85-115			
Thallium	0.00955	0.0020	mg/l	0.0100		96	85-115			

[redacted]

Del Mar Analytical - Phoenix
Ken Baker
Project Manager

The results pertain only to the samples tested in the laboratory. This report shall not be reproduced, except in full, without written permission from Del Mar Analytical.

Del Mar Analytical

17461 Derian Ave., Suite 100, Irvine, CA 92614 (949) 261-1022 FAX (949) 260-3297
1014 E. Cooley Dr., Suite A, Colton, CA 92324 (909) 370-4667 FAX (909) 370-1046
9484 Chesapeake Dr., Suite 805, San Diego, CA 92123 (858) 505-8596 FAX (858) 505-9689
9830 South 51st St., Suite B-120, Phoenix, AZ 85044 (480) 785-0043 FAX (480) 785-0851
2520 E. Sunset Rd. #3, Las Vegas, NV 89120 (702) 798-3620 FAX (702) 798-3621

[redacted]dro Systems, Inc.
1220 S. Park Lane
Tempe, AZ 85281
Attention: Phil Paski

Project ID: 05-400

Report Number: POJ0871

Sampled: 10/31/05
Received: 10/31/05

METHOD BLANK/QC DATA

TOTAL RECOVERABLE METALS

Analyte	Result	Reporting Limit	Units	Spike Level	Source Result	%REC	%REC Limits	RPD	RPD Limit	Data Qualifiers
Batch: P5K0128 Extracted: 11/02/05										
LCS Dup Analyzed: 11/03/2005-11/29/2005 (P5K0128-BSD1)										
Antimony	0.0225	0.0040	mg/l	0.0200		112	85-115	11	15	
Arsenic	0.0212	0.0030	mg/l	0.0200		106	85-115	3	15	
Chromium	0.0189	0.0040	mg/l	0.0200		94	85-115	3	15	
Lead	0.0197	0.0020	mg/l	0.0200		98	85-115	1	15	
Selenium	0.0211	0.0040	mg/l	0.0200		106	85-115	2	15	
Thallium	0.00999	0.0020	mg/l	0.0100		100	85-115	5	20	
Matrix Spike Analyzed: 11/03/2005-11/29/2005 (P5K0128-MS1)					**Source: POJ0731-02**					
Antimony	0.0243	0.0040	mg/l	0.0200	ND	122	70-130			
[redacted]ic	0.0718	0.0060	mg/l	0.0200	0.051	104	70-130			
[redacted]mium	0.0442	0.0075	mg/l	0.0200	0.022	111	70-130			
Lead	0.0174	0.0020	mg/l	0.0200	ND	87	70-130			
Selenium	0.0189	0.0040	mg/l	0.0200	0.0014	88	70-130			
Thallium	0.0101	0.0020	mg/l	0.0100	ND	101	70-130			
Matrix Spike Dup Analyzed: 11/03/2005-11/29/2005 (P5K0128-MSD1)					**Source: POJ0731-02**					
Antimony	0.0245	0.0040	mg/l	0.0200	ND	122	70-130	1	15	
Arsenic	0.0732	0.0060	mg/l	0.0200	0.051	111	70-130	2	15	
Chromium	0.0442	0.0075	mg/l	0.0200	0.022	111	70-130	0	15	
Lead	0.0175	0.0020	mg/l	0.0200	ND	88	70-130	1	15	
Selenium	0.0200	0.0040	mg/l	0.0200	0.0014	93	70-130	6	15	
Thallium	0.00996	0.0020	mg/l	0.0100	ND	100	70-130	1	20	
Batch: P5K0201 Extracted: 11/02/05										
Blank Analyzed: 11/04/2005 (P5K0201-BLK1)										
Barium	ND	0.010	mg/l							
Beryllium	ND	0.0040	mg/l							
Cadmium	ND	0.0050	mg/l							
Calcium	ND	2.0	mg/l							
Copper	ND	0.020	mg/l							
Iron	ND	0.20	mg/l							
Magnesium	ND	0.50	mg/l							
Manganese	ND	0.020	mg/l							
Nickel	ND	0.050	mg/l							
Silica	ND	2.5	mg/l							
[redacted]	ND	0.050	mg/l							

Del Mar Analytical - Phoenix
Ken Baker
Project Manager

The results pertain only to the samples tested in the laboratory. This report shall not be reproduced, except in full, without written permission from Del Mar Analytical.

Del Mar Analytical

17461 Derian Ave., Suite 100, Irvine, CA 92614 (949) 261-1022 FAX (949) 260-3297
1014 E. Cooley Dr., Suite A, Colton, CA 92324 (909) 370-4667 FAX (909) 370-1046
9484 Chesapeake Dr., Suite 805, San Diego, CA 92123 (858) 505-8596 FAX (858) 505-9689
9830 South 51st St., Suite B-120, Phoenix, AZ 85044 (480) 785-0043 FAX (480) 785-0851
2520 E. Sunset Rd. #3, Las Vegas, NV 89120 (702) 798-3620 FAX (702) 798-3621

[redacted]dro Systems, Inc.
1220 S. Park Lane
Tempe, AZ 85281
Attention: Phil Paski

Project ID: 05-400

Report Number: POJ0871

Sampled: 10/31/05
Received: 10/31/05

METHOD BLANK/QC DATA

TOTAL RECOVERABLE METALS

Analyte	Result	Reporting Limit	Units	Spike Level	Source Result	%REC	%REC Limits	RPD	RPD Limit	Data Qualifiers
Batch: P5K0201 Extracted: 11/02/05										
LCS Analyzed: 11/04/2005 (P5K0201-BS1)										
Barium	1.08	0.010	mg/l	0.999		108	85-115			
Beryllium	1.07	0.0040	mg/l	0.999		107	85-115			
Cadmium	1.03	0.0050	mg/l	0.999		103	85-115			
Calcium	11.4	2.0	mg/l	9.99		114	85-115			
Copper	1.03	0.020	mg/l	0.999		103	85-115			
Iron	10.9	0.20	mg/l	9.99		109	85-115			
Magnesium	10.7	0.50	mg/l	9.99		107	85-115			
Manganese	1.04	0.020	mg/l	0.999		104	85-115			
Nickel	1.02	0.050	mg/l	0.999		102	85-115			
[redacted]	21.6	2.5	mg/l	21.4		101	85-115			
Zinc	1.09	0.050	mg/l	0.999		109	85-115			
LCS Dup Analyzed: 11/04/2005 (P5K0201-BSD1)										
Barium	1.08	0.010	mg/l	0.999		108	85-115	0	20	
Beryllium	1.07	0.0040	mg/l	0.999		107	85-115	0	20	
Cadmium	1.03	0.0050	mg/l	0.999		103	85-115	0	20	
Calcium	11.3	2.0	mg/l	9.99		113	85-115	1	20	
Copper	1.03	0.020	mg/l	0.999		103	85-115	0	20	
Iron	10.9	0.20	mg/l	9.99		109	85-115	0	20	
Magnesium	10.7	0.50	mg/l	9.99		107	85-115	0	20	
Manganese	1.04	0.020	mg/l	0.999		104	85-115	0	20	
Nickel	1.02	0.050	mg/l	0.999		102	85-115	0	20	
Silica	21.8	2.5	mg/l	21.4		102	85-115	1	20	
Zinc	1.09	0.050	mg/l	0.999		109	85-115	0	20	
Matrix Spike Analyzed: 11/04/2005 (P5K0201-MS1)					**Source: POJ0731-05**					
Barium	1.10	0.010	mg/l	0.999	0.074	103	70-130			
Beryllium	1.05	0.0040	mg/l	0.999	ND	105	70-130			
Cadmium	0.982	0.0050	mg/l	0.999	ND	98	70-130			
Calcium	51.3	2.0	mg/l	9.99	40	113	70-130			
Copper	0.995	0.020	mg/l	0.999	0.0072	99	70-130			
Iron	10.4	0.20	mg/l	9.99	0.098	103	70-130			
Magnesium	20.0	0.50	mg/l	9.99	9.5	105	70-130			
Manganese	0.994	0.020	mg/l	0.999	0.010	98	70-130			
Nickel	0.990	0.050	mg/l	0.999	0.015	98	70-130			
[redacted]	60.7	2.5	mg/l	21.4	38	106	70-130			

Del Mar Analytical - Phoenix
Ken Baker
Project Manager

The results pertain only to the samples tested in the laboratory. This report shall not be reproduced, except in full, without written permission from Del Mar Analytical.

Del Mar Analytical

17461 Derian Ave., Suite 100, Irvine, CA 92614 (949) 261-1022 FAX (949) 260-3297
1014 E. Cooley Dr., Suite A, Colton, CA 92324 (909) 370-4667 FAX (909) 370-1046
9484 Chesapeake Dr., Suite 805, San Diego, CA 92123 (858) 505-8596 FAX (858) 505-9689
9830 South 51st St., Suite B-120, Phoenix, AZ 85044 (480) 785-0043 FAX (480) 785-0851
2520 E. Sunset Rd. #3, Las Vegas, NV 89120 (702) 798-3620 FAX (702) 798-3621

dro Systems, Inc.
1220 S. Park Lane
Tempe, AZ 85281
Attention: Phil Paski

Project ID: 05-400

Report Number: POJ0871

Sampled: 10/31/05
Received: 10/31/05

METHOD BLANK/QC DATA

TOTAL RECOVERABLE METALS

Analyte	Result	Reporting Limit	Units	Spike Level	Source Result	%REC	%REC Limits	RPD	RPD Limit	Data Qualifiers
Batch: P5K0201 Extracted: 11/02/05										
Matrix Spike Analyzed: 11/04/2005 (P5K0201-MS1)					**Source: POJ0731-05**					
Zinc	1.08	0.050	mg/l	0.999	0.043	104	70-130			
Matrix Spike Dup Analyzed: 11/04/2005 (P5K0201-MSD1)					**Source: POJ0731-05**					
Barium	1.10	0.010	mg/l	0.999	0.074	103	70-130	0	20	
Beryllium	1.03	0.0040	mg/l	0.999	ND	103	70-130	2	20	
Cadmium	0.976	0.0050	mg/l	0.999	ND	98	70-130	1	20	
Calcium	50.3	2.0	mg/l	9.99	40	103	70-130	2	20	
Copper	1.01	0.020	mg/l	0.999	0.0072	100	70-130	1	20	
Iron	10.3	0.20	mg/l	9.99	0.098	102	70-130	1	20	
[redacted]esium	20.1	0.50	mg/l	9.99	9.5	106	70-130	1	20	
[redacted]ganese	0.998	0.020	mg/l	0.999	0.010	99	70-130	0	20	
Nickel	0.994	0.050	mg/l	0.999	0.015	98	70-130	0	20	
Silica	60.6	2.5	mg/l	21.4	38	106	70-130	0	20	
Zinc	1.09	0.050	mg/l	0.999	0.043	105	70-130	1	20	
Batch: P5K0311 Extracted: 11/03/05										
Blank Analyzed: 11/03/2005 (P5K0311-BLK1)										
Mercury	ND	0.00020	mg/l							
Blank Analyzed: 11/03/2005 (P5K0311-BLK2)										
Mercury	ND	0.00020	mg/l							
Blank Analyzed: 11/03/2005 (P5K0311-BLK3)										
Mercury	ND	0.00020	mg/l							
LCS Analyzed: 11/03/2005 (P5K0311-BS1)										
Mercury	0.00790	0.00020	mg/l	0.00800		99	85-115			

Del Mar Analytical - Phoenix
Ken Baker
Project Manager

The results pertain only to the samples tested in the laboratory. This report shall not be reproduced, except in full, without written permission from Del Mar Analytical.

Del Mar Analytical

17461 Derian Ave., Suite 100, Irvine, CA 92614 (949) 261-1022 FAX (949) 260-3297
1014 E. Cooley Dr., Suite A, Colton, CA 92324 (909) 370-4667 FAX (909) 370-1046
9484 Chesapeake Dr., Suite 805, San Diego, CA 92123 (858) 505-8596 FAX (858) 505-9689
9830 South 51st St., Suite B-120, Phoenix, AZ 85044 (480) 785-0043 FAX (480) 785-0851
2520 E. Sunset Rd. #3, Las Vegas, NV 89120 (702) 798-3620 FAX (702) 798-3621

[redacted]dro Systems, Inc.
1220 S. Park Lane
Tempe, AZ 85281
Attention: Phil Paski

Project ID: 05-400

Report Number: POJ0871

Sampled: 10/31/05
Received: 10/31/05

METHOD BLANK/QC DATA

TOTAL RECOVERABLE METALS

Analyte	Result	Reporting Limit	Units	Spike Level	Source Result	%REC	%REC Limits	RPD	RPD Limit	Data Qualifiers
Batch: P5K0311 Extracted: 11/03/05										
LCS Dup Analyzed: 11/03/2005 (P5K0311-BSD1)										
Mercury	0.00787	0.00020	mg/l	0.00800		98	85-115	0	15	
Matrix Spike Analyzed: 11/03/2005 (P5K0311-MS1)					Source: POK0046-01					
Mercury	0.00791	0.00020	mg/l	0.00800	ND	99	85-115			
Matrix Spike Dup Analyzed: 11/03/2005 (P5K0311-MSD1)					Source: POK0046-01					
Mercury	0.00771	0.00020	mg/l	0.00800	ND	96	85-115	3	15	
Batch: P5K1005 Extracted: 11/10/05										
[redacted]k Analyzed: 11/21/2005 (P5K1005-BLK1)										
[redacted]m	ND	5.0	mg/l							
LCS Analyzed: 11/21/2005 (P5K1005-BS1)										
Sodium	10.8	10	mg/l	10.0		108	85-115			
LCS Dup Analyzed: 11/21/2005 (P5K1005-BSD1)										
Sodium	11.0	10	mg/l	10.0		110	85-115	2	15	
Matrix Spike Analyzed: 11/21/2005 (P5K1005-MS1)					Source: POK0166-01					
Sodium	820	500	mg/l	10.0	620	2000	85-115			*MI*
Matrix Spike Dup Analyzed: 11/21/2005 (P5K1005-MSD1)					Source: POK0166-01					
Sodium	630	500	mg/l	10.0	620	100	85-115	26	15	*RI*

[redacted]

Del Mar Analytical - Phoenix
Ken Baker
Project Manager

The results pertain only to the samples tested in the laboratory. This report shall not be reproduced, except in full, without written permission from Del Mar Analytical.

Del Mar Analytical

17461 Derian Ave., Suite 100, Irvine, CA 92614 (949) 261-1022 FAX (949) 260-3297
1014 E. Cooley Dr., Suite A, Colton, CA 92324 (909) 370-4667 FAX (909) 370-1046
9484 Chesapeake Dr., Suite 805, San Diego, CA 92123 (858) 505-8596 FAX (858) 505-9689
9830 South 51st St., Suite B-120, Phoenix, AZ 85044 (480) 785-0043 FAX (480) 785-0851
2520 E. Sunset Rd. #3, Las Vegas, NV 89120 (702) 798-3620 FAX (702) 798-3621

dro Systems, Inc.
1220 S. Park Lane
Tempe, AZ 85281
Attention: Phil Paski

Project ID: 05-400

Report Number: POJ0871

Sampled: 10/31/05
Received: 10/31/05

METHOD BLANK/QC DATA

INORGANICS

Analyte	Result	Reporting Limit	Units	Spike Level	Source Result	%REC	%REC Limits	RPD	RPD Limit	Data Qualifiers
Batch: P5K0103 Extracted: 11/01/05										
Blank Analyzed: 11/01/2005 (P5K0103-BLK1)										
Turbidity	ND	1.0	NTU							
Duplicate Analyzed: 11/01/2005 (P5K0103-DUP1)					Source: POJ0871-01					
Turbidity	23.4	1.0	NTU		22			6	20	
Reference Analyzed: 11/01/2005 (P5K0103-SRM1)										
Turbidity	10.7	1.0	NTU	10.4		103	90-110			
Batch: P5K0108 Extracted: 11/01/05										
Blank Analyzed: 11/01/2005 (P5K0108-BLK1)										
Fluoride	ND	0.10	mg/l							
Nitrate-N	ND	0.10	mg/l							
Nitrate/Nitrite-N	ND	0.20	mg/l							
Nitrite-N	ND	0.10	mg/l							
Chloride	ND	0.50	mg/l							
LCS Analyzed: 11/01/2005 (P5K0108-BS1)										
Fluoride	2.57	0.10	mg/l	2.50		103	90-110			
Nitrate-N	2.58	0.10	mg/l	2.50		103	90-110			
Nitrite-N	2.56	0.10	mg/l	2.50		102	90-110			
Chloride	4.97	0.50	mg/l	5.00		99	90-110			
LCS Dup Analyzed: 11/01/2005 (P5K0108-BSD1)										
Fluoride	2.73	0.10	mg/l	2.50		109	90-110	6	20	
Chloride	5.28	0.50	mg/l	5.00		106	90-110	6	15	
Nitrite-N	2.72	0.10	mg/l	2.50		109	90-110	6	15	
Nitrate-N	2.73	0.10	mg/l	2.50		109	90-110	6	15	

Del Mar Analytical - Phoenix
Ken Baker
Project Manager

The results pertain only to the samples tested in the laboratory. This report shall not be reproduced, except in full, without written permission from Del Mar Analytical.

Del Mar Analytical

17461 Derian Ave., Suite 100, Irvine, CA 92614 (949) 261-1022 FAX (949) 260-3297
1014 E. Cooley Dr., Suite A, Colton, CA 92324 (909) 370-4667 FAX (909) 370-1046
9484 Chesapeake Dr., Suite 805, San Diego, CA 92123 (858) 505-8596 FAX (858) 505-9689
9830 South 51st St., Suite B-120, Phoenix, AZ 85044 (480) 785-0043 FAX (480) 785-0851
2520 E. Sunset Rd. #3, Las Vegas, NV 89120 (702) 798-3620 FAX (702) 798-3621

dro Systems, Inc.
1220 S. Park Lane
Tempe, AZ 85281
Attention: Phil Paski

Project ID: 05-400

Report Number: POJ0871

Sampled: 10/31/05
Received: 10/31/05

METHOD BLANK/QC DATA

INORGANICS

Analyte	Result	Reporting Limit	Units	Spike Level	Source Result	%REC	%REC Limits	RPD	RPD Limit	Data Qualifiers
Batch: P5K0108 Extracted: 11/01/05										
Matrix Spike Analyzed: 11/01/2005 (P5K0108-MS1)					**Source: POJ0871-01RE1**					
Fluoride	25.4	1.0	mg/l	25.0	ND	102	80-120			
Nitrite-N	25.4	1.0	mg/l	25.0	ND	102	80-120			
Nitrate-N	26.1	1.0	mg/l	25.0	ND	104	80-120			
Chloride	51.5	5.0	mg/l	50.0	ND	103	80-120			
Matrix Spike Dup Analyzed: 11/01/2005 (P5K0108-MSD1)					**Source: POJ0871-01RE1**					
Nitrate-N	26.7	1.0	mg/l	25.0	ND	107	80-120	2	15	
Nitrite-N	26.2	1.0	mg/l	25.0	ND	105	80-120	3	15	
Chloride	53.1	5.0	mg/l	50.0	ND	106	80-120	3	15	
ide	26.4	1.0	mg/l	25.0	ND	106	80-120	4	20	
Batch: P5K0115 Extracted: 11/01/05										
Duplicate Analyzed: 11/01/2005 (P5K0115-DUP1)					**Source: POJ0871-01**					
pH	8.12	NA	pH Units		8.08			1	10	
Reference Analyzed: 11/01/2005 (P5K0115-SRM1)										
pH	6.99	NA	pH Units	7.00		100	99-101			
Batch: P5K0201 Extracted: 11/02/05										
Blank Analyzed: 11/04/2005 (P5K0201-BLK1)										
Calcium Hardness (CaCO3)	ND	5.0	mg/l							
Batch: P5K0204 Extracted: 11/02/05										
Blank Analyzed: 11/02/2005 (P5K0204-BLK1)										
Total Dissolved Solids	ND	20	mg/l							

Del Mar Analytical - Phoenix
Ken Baker
Project Manager

The results pertain only to the samples tested in the laboratory. This report shall not be reproduced, except in full, without written permission from Del Mar Analytical.

Del Mar Analytical

17461 Derian Ave., Suite 100, Irvine, CA 92614 (949) 261-1022 FAX (949) 260-3297
1014 E. Cooley Dr., Suite A, Colton, CA 92324 (909) 370-4667 FAX (909) 370-1046
9484 Chesapeake Dr., Suite 805, San Diego, CA 92123 (858) 505-8596 FAX (858) 505-9689
9830 South 51st St., Suite B-120, Phoenix, AZ 85044 (480) 785-0043 FAX (480) 785-0851
2520 E. Sunset Rd. #3, Las Vegas, NV 89120 (702) 798-3620 FAX (702) 798-3621

dro Systems, Inc.
1220 S. Park Lane
Tempe, AZ 85281
Attention: Phil Paski

Project ID: 05-400

Report Number: POJ0871

Sampled: 10/31/05
Received: 10/31/05

METHOD BLANK/QC DATA

INORGANICS

Analyte	Result	Reporting Limit	Units	Spike Level	Source Result	%REC	%REC Limits	RPD	RPD Limit	Data Qualifiers
Batch: P5K0204 Extracted: 11/02/05										
LCS Analyzed: 11/02/2005 (P5K0204-BS1)										
Total Dissolved Solids	384	20	mg/l	400		96	80-115			
LCS Dup Analyzed: 11/02/2005 (P5K0204-BSD1)										
Total Dissolved Solids	386	20	mg/l	400		96	80-115	1	10	
Duplicate Analyzed: 11/02/2005 (P5K0204-DUP1)					**Source: POJ0792-01**					
Total Dissolved Solids	554	20	mg/l		540			3	10	
Duplicate Analyzed: 11/02/2005 (P5K0204-DUP2)					**Source: POJ0871-01**					
Total Dissolved Solids	104	20	mg/l		100			4	10	
h: P5K0205 Extracted: 11/02/05										
Blank Analyzed: 11/02/2005 (P5K0205-BLK1)										
Sulfate	ND	0.50	mg/l							
LCS Analyzed: 11/02/2005 (P5K0205-BS1)										
Sulfate	5.12	0.50	mg/l	5.00		102	90-110			
LCS Dup Analyzed: 11/02/2005 (P5K0205-BSD1)										
Sulfate	5.12	0.50	mg/l	5.00		102	90-110	0	15	
Matrix Spike Analyzed: 11/02/2005 (P5K0205-MS1)					**Source: POJ0786-01RE2**					
Sulfate	120	5.0	mg/l	50.0	75	90	80-120			
Matrix Spike Dup Analyzed: 11/02/2005 (P5K0205-MSD1)					**Source: POJ0786-01RE2**					
Sulfate	118	5.0	mg/l	50.0	75	86	80-120	2	15	

Del Mar Analytical - Phoenix
Ken Baker
Project Manager

The results pertain only to the samples tested in the laboratory. This report shall not be reproduced, except in full, without written permission from Del Mar Analytical.

Del Mar Analytical

17461 Derian Ave., Suite 100, Irvine, CA 92614 (949) 261-1022 FAX (949) 260-3297
1014 E. Cooley Dr., Suite A, Colton, CA 92324 (909) 370-4667 FAX (909) 370-1046
9484 Chesapeake Dr., Suite 805, San Diego, CA 92123 (858) 505-8596 FAX (858) 505-9689
9830 South 51st St., Suite B-120, Phoenix, AZ 85044 (480) 785-0043 FAX (480) 785-0851
2520 E. Sunset Rd. #3, Las Vegas, NV 89120 (702) 798-3620 FAX (702) 798-3621

dro Systems, Inc.
1220 S. Park Lane
Tempe, AZ 85281
Attention: Phil Paski

Project ID: 05-400

Report Number: POJ0871

Sampled: 10/31/05
Received: 10/31/05

METHOD BLANK/QC DATA

INORGANICS

Analyte	Result	Reporting Limit	Units	Spike Level	Source Result	%REC	%REC Limits	RPD	RPD Limit	Data Qualifiers
Batch: P5K0310 Extracted: 11/03/05										
Duplicate Analyzed: 11/03/2005 (P5K0310-DUP1)					**Source: POJ0786-01**					
Specific Conductance	982	1.0	umhos/cm		980			0	10	
Reference Analyzed: 11/03/2005 (P5K0310-SRM1)										
Specific Conductance	1410	1.0	umhos/cm	1410		100	90-110			
Reference Analyzed: 11/03/2005 (P5K0310-SRM2)										
Specific Conductance	1410	1.0	umhos/cm	1410		100	90-110			
Batch: P5K0315 Extracted: 11/03/05										
licate Analyzed: 11/03/2005 (P5K0315-DUP1)					**Source: POJ0786-01**					
nity as CaCO3	205	5.0	mg/l		200			2	20	
Reference Analyzed: 11/03/2005 (P5K0315-SRM1)										
Alkalinity as CaCO3	49.0	5.0	mg/l	51.9		94	90-107			

Del Mar Analytical - Phoenix
Ken Baker
Project Manager

The results pertain only to the samples tested in the laboratory. This report shall not be reproduced, except in full, without written permission from Del Mar Analytical.

Del Mar Analytical

17461 Derian Ave., Suite 100, Irvine, CA 92614 (949) 261-1022 FAX (949) 260-3297
1014 E. Cooley Dr., Suite A, Colton, CA 92324 (909) 370-4667 FAX (909) 370-1046
9484 Chesapeake Dr., Suite 805, San Diego, CA 92123 (858) 505-8596 FAX (858) 505-9689
9830 South 51st St., Suite B-120, Phoenix, AZ 85044 (480) 785-0043 FAX (480) 785-0851
2520 E. Sunset Rd. #3, Las Vegas, NV 89120 (702) 798-3620 FAX (702) 798-3621

dro Systems, Inc.
1220 S. Park Lane
Tempe, AZ 85281
Attention: Phil Paski

Project ID: 05-400

Report Number: POJ0871

Sampled: 10/31/05
Received: 10/31/05

METHOD BLANK/QC DATA

METALS

Analyte	Result	Reporting Limit	Units	Spike Level	Source Result	%REC	%REC Limits	RPD	RPD Limit	Data Qualifiers
Batch: 5K01106 Extracted: 11/01/05										
Blank Analyzed: 11/02/2005 (5K01106-BLK1)										
Sodium	ND	0.50	mg/l							
LCS Analyzed: 11/02/2005 (5K01106-BS1)										
Sodium	4.95	0.50	mg/l	5.00		99	85-115			
Matrix Spike Analyzed: 11/02/2005 (5K01106-MS1)					**Source: IOK0014-01**					
Sodium	9.47	0.50	mg/l	5.00	4.9	91	70-130			
Matrix Spike Analyzed: 11/02/2005 (5K01106-MS2)					**Source: IOK0074-01**					
Sodium	905	1.0	mg/l	5.00	940	-700	70-130			*M3*
ix Spike Dup Analyzed: 11/02/2005 (5K01106-MSD1)					**Source: IOK0014-01**					
Sodium	9.69	0.50	mg/l	5.00	4.9	96	70-130	2	20	

Del Mar Analytical - Phoenix
Ken Baker
Project Manager

The results pertain only to the samples tested in the laboratory. This report shall not be reproduced, except in full, without written permission from Del Mar Analytical.

Del Mar Analytical

17461 Derian Ave., Suite 100, Irvine, CA 92614 (949) 261-1022 FAX (949) 260-3297
1014 E. Cooley Dr., Suite A, Colton, CA 92324 (909) 370-4667 FAX (909) 370-1046
9484 Chesapeake Dr., Suite 805, San Diego, CA 92123 (858) 505-8596 FAX (858) 505-9689
9830 South 51st St., Suite B-120, Phoenix, AZ 85044 (480) 785-0043 FAX (480) 785-0851
2520 E. Sunset Rd. #3, Las Vegas, NV 89120 (702) 798-3620 FAX (702) 798-3621

dro Systems, Inc.
1220 S. Park Lane
Tempe, AZ 85281
Attention: Phil Paski

Project ID: 05-400

Report Number: POJ0871

Sampled: 10/31/05
Received: 10/31/05

METHOD BLANK/QC DATA

INORGANICS

Analyte	Result	Reporting Limit	Units	Spike Level	Source Result	%REC	%REC Limits	RPD	RPD Limit	Data Qualifiers
Batch: 5K07095 Extracted: 11/07/05										
Blank Analyzed: 11/07/2005 (5K07095-BLK1)										
Amenable Cyanide	ND	0.020	mg/l							
LCS Analyzed: 11/07/2005 (5K07095-BS1)										
Amenable Cyanide	0.188	0.020	mg/l	0.200		94	90-110			
Matrix Spike Analyzed: 11/07/2005 (5K07095-MS1)					**Source: IOK0212-02**					
Amenable Cyanide	ND	0.020	mg/l	0.200	ND		70-130			*M2*
Matrix Spike Dup Analyzed: 11/07/2005 (5K07095-MSD1)					**Source: IOK0212-02**					
Amenable Cyanide	ND	0.020	mg/l	0.200	ND		70-130		20	*M2*

Del Mar Analytical - Phoenix
Ken Baker
Project Manager

The results pertain only to the samples tested in the laboratory. This report shall not be reproduced, except in full, without written permission from Del Mar Analytical.

Del Mar Analytical

17461 Derian Ave., Suite 100, Irvine, CA 92614 (949) 261-1022 FAX (949) 260-3297
1014 E. Cooley Dr., Suite A, Colton, CA 92324 (909) 370-4667 FAX (909) 370-1046
9484 Chesapeake Dr., Suite 805, San Diego, CA 92123 (858) 505-8596 FAX (858) 505-9689
9830 South 51st St., Suite B-120, Phoenix, AZ 85044 (480) 785-0043 FAX (480) 785-0851
2520 E. Sunset Rd. #3, Las Vegas, NV 89120 (702) 798-3620 FAX (702) 798-3621

dro Systems, Inc.
1220 S. Park Lane
Tempe, AZ 85281
Attention: Phil Paski

Project ID: 05-400

Report Number: POJ0871

Sampled: 10/31/05
Received: 10/31/05

METHOD BLANK/QC DATA

PURGEABLE ORGANIC COMPOUNDS BY GC/MS (EPA 524.2)

Analyte	Result	Reporting Limit	Units	Spike Level	Source Result	%REC	%REC Limits	RPD	RPD Limit	Data Qualifiers
Batch: C5K0125 Extracted: 11/01/05										
Blank Analyzed: 11/01/2005 (C5K0125-BLK1)										
Benzene	ND	0.00050	mg/l							
Bromodichloromethane	ND	0.00050	mg/l							
Bromoform	ND	0.00050	mg/l							
Carbon tetrachloride	ND	0.00050	mg/l							
Chlorobenzene	ND	0.00050	mg/l							
Chloroform	ND	0.00050	mg/l							
Dibromochloromethane	ND	0.00050	mg/l							
1,2-Dichlorobenzene	ND	0.00050	mg/l							
1,4-Dichlorobenzene	ND	0.00050	mg/l							
ichloroethane	ND	0.00050	mg/l							
1,1-Dichloroethene	ND	0.00050	mg/l							
cis-1,2-Dichloroethene	ND	0.00050	mg/l							
trans-1,2-Dichloroethene	ND	0.00050	mg/l							
1,2-Dichloropropane	ND	0.00050	mg/l							
Ethylbenzene	ND	0.00050	mg/l							
Methylene chloride	ND	0.00050	mg/l							
Styrene	ND	0.00050	mg/l							
Tetrachloroethene	ND	0.00050	mg/l							
Toluene	ND	0.00050	mg/l							
1,2,4-Trichlorobenzene	ND	0.00050	mg/l							
1,1,1-Trichloroethane	ND	0.00050	mg/l							
1,1,2-Trichloroethane	ND	0.00050	mg/l							
Trichloroethene	ND	0.00050	mg/l							
Vinyl chloride	ND	0.00050	mg/l							
m,p-Xylenes	ND	0.00050	mg/l							
o-Xylene	ND	0.00050	mg/l							
Xylenes, Total	ND	0.0015	mg/l							
Trihalomethanes, Total	<0.0005	0.00050	mg/l							
Surrogate: 4-Bromofluorobenzene	*0.00419*		*mg/l*	*0.00500*		*84*	*70-130*			
Surrogate: 1,2-Dichlorobenzene-d4	*0.00435*		*mg/l*	*0.00500*		*87*	*70-130*			

Del Mar Analytical - Phoenix
Ken Baker
Project Manager

The results pertain only to the samples tested in the laboratory. This report shall not be reproduced, except in full, without written permission from Del Mar Analytical.

Del Mar Analytical

17461 Derian Ave., Suite 100, Irvine, CA 92614 (949) 261-1022 FAX (949) 260-3297
1014 E. Cooley Dr., Suite A, Colton, CA 92324 (909) 370-4667 FAX (909) 370-1046
9484 Chesapeake Dr., Suite 805, San Diego, CA 92123 (858) 505-8596 FAX (858) 505-9689
9830 South 51st St., Suite B-120, Phoenix, AZ 85044 (480) 785-0043 FAX (480) 785-0851
2520 E. Sunset Rd. #3, Las Vegas, NV 89120 (702) 798-3620 FAX (702) 798-3621

dro Systems, Inc.
1220 S. Park Lane
Tempe, AZ 85281
Attention: Phil Paski

Project ID: 05-400

Report Number: POJ0871

Sampled: 10/31/05
Received: 10/31/05

METHOD BLANK/QC DATA

PURGEABLE ORGANIC COMPOUNDS BY GC/MS (EPA 524.2)

Analyte	Result	Reporting Limit	Units	Spike Level	Source Result	%REC	%REC Limits	RPD	RPD Limit	Data Qualifiers
Batch: C5K0125 Extracted: 11/01/05										
LCS Analyzed: 11/01/2005 (C5K0125-BS1)										
Benzene	0.0102	0.00050	mg/l	0.0100		102	70-130			
Bromodichloromethane	0.0109	0.00050	mg/l	0.0100		109	70-130			
Bromoform	0.00943	0.00050	mg/l	0.0100		94	70-130			
Carbon tetrachloride	0.0130	0.00050	mg/l	0.0100		130	70-130			
Chlorobenzene	0.0102	0.00050	mg/l	0.0100		102	70-130			
Chloroform	0.0105	0.00050	mg/l	0.0100		105	70-130			
Dibromochloromethane	0.00914	0.00050	mg/l	0.0100		91	70-130			
1,2-Dichlorobenzene	0.0105	0.00050	mg/l	0.0100		105	70-130			
1,4-Dichlorobenzene	0.0105	0.00050	mg/l	0.0100		105	70-130			
chloroethane	0.0128	0.00050	mg/l	0.0100		128	70-130			
1,1-Dichloroethene	0.0108	0.00050	mg/l	0.0100		108	70-130			
cis-1,2-Dichloroethene	0.0104	0.00050	mg/l	0.0100		104	70-130			
trans-1,2-Dichloroethene	0.0107	0.00050	mg/l	0.0100		107	70-130			
1,2-Dichloropropane	0.00994	0.00050	mg/l	0.0100		99	70-130			
Ethylbenzene	0.0109	0.00050	mg/l	0.0100		109	70-130			
Methylene chloride	0.0100	0.00050	mg/l	0.0100		100	70-130			
Styrene	0.00961	0.00050	mg/l	0.0100		96	70-130			
Tetrachloroethene	0.0102	0.00050	mg/l	0.0100		102	70-130			
Toluene	0.00981	0.00050	mg/l	0.0100		98	70-130			
1,2,4-Trichlorobenzene	0.0118	0.00050	mg/l	0.0100		118	70-130			
1,1,1-Trichloroethane	0.0120	0.00050	mg/l	0.0100		120	70-130			
1,1,2-Trichloroethane	0.0101	0.00050	mg/l	0.0100		101	70-130			
Trichloroethene	0.0109	0.00050	mg/l	0.0100		109	70-130			
Vinyl chloride	0.0113	0.00050	mg/l	0.0100		113	70-130			
m,p-Xylenes	0.0232	0.00050	mg/l	0.0200		116	70-130			
o-Xylene	0.0102	0.00050	mg/l	0.0100		102	70-130			
Xylenes, Total	0.0334	0.0015	mg/l	0.0300		111	70-130			
Trihalomethanes, Total	0.0399	0.00050	mg/l	0.0400		100	70-130			
Surrogate: 4-Bromofluorobenzene	*0.00523*		*mg/l*	*0.00500*		*105*	*70-130*			
Surrogate: 1,2-Dichlorobenzene-d4	*0.00520*		*mg/l*	*0.00500*		*104*	*70-130*			

Del Mar Analytical - Phoenix
Ken Baker
Project Manager

The results pertain only to the samples tested in the laboratory. This report shall not be reproduced, except in full, without written permission from Del Mar Analytical.

Del Mar Analytical

17461 Derian Ave., Suite 100, Irvine, CA 92614 (949) 261-1022 FAX (949) 260-3297
1014 E. Cooley Dr., Suite A, Colton, CA 92324 (909) 370-4667 FAX (909) 370-1046
9484 Chesapeake Dr., Suite 805, San Diego, CA 92123 (858) 505-8596 FAX (858) 505-9689
9830 South 51st St., Suite B-120, Phoenix, AZ 85044 (480) 785-0043 FAX (480) 785-0851
2520 E. Sunset Rd. #3, Las Vegas, NV 89120 (702) 798-3620 FAX (702) 798-3621

dro Systems, Inc.
1220 S. Park Lane
Tempe, AZ 85281
Attention: Phil Paski

Project ID: 05-400

Report Number: POJ0871

Sampled: 10/31/05
Received: 10/31/05

METHOD BLANK/QC DATA

PURGEABLE ORGANIC COMPOUNDS BY GC/MS (EPA 524.2)

Analyte	Result	Reporting Limit	Units	Spike Level	Source Result	%REC	%REC Limits	RPD	RPD Limit	Data Qualifiers
Batch: C5K0125 Extracted: 11/01/05										
Matrix Spike Analyzed: 11/01/2005 (C5K0125-MS1)					**Source: COJ0867-01**					
Benzene	0.00490	0.00050	mg/l	0.00500	ND	98	60-125			
Bromodichloromethane	0.00514	0.00050	mg/l	0.00500	ND	103	70-145			
Bromoform	0.00446	0.00050	mg/l	0.00500	ND	89	55-145			
Carbon tetrachloride	0.00602	0.00050	mg/l	0.00500	ND	120	70-150			
Chlorobenzene	0.00463	0.00050	mg/l	0.00500	ND	93	65-130			
Chloroform	0.00505	0.00050	mg/l	0.00500	ND	101	55-140			
Dibromochloromethane	0.00472	0.00050	mg/l	0.00500	ND	94	65-145			
1,2-Dichlorobenzene	0.00490	0.00050	mg/l	0.00500	ND	98	65-135			
1,4-Dichlorobenzene	0.00487	0.00050	mg/l	0.00500	ND	97	65-135			
ichloroethane	0.00513	0.00050	mg/l	0.00500	ND	103	65-135			
1,1-Dichloroethene	0.00534	0.00050	mg/l	0.00500	ND	107	60-135			
cis-1,2-Dichloroethene	0.00494	0.00050	mg/l	0.00500	ND	99	60-125			
trans-1,2-Dichloroethene	0.00512	0.00050	mg/l	0.00500	ND	102	60-125			
1,2-Dichloropropane	0.00459	0.00050	mg/l	0.00500	ND	92	65-120			
Ethylbenzene	0.00495	0.00050	mg/l	0.00500	ND	99	60-135			
Methylene chloride	0.00507	0.00050	mg/l	0.00500	0.00017	98	65-135			
Styrene	0.00453	0.00050	mg/l	0.00500	ND	91	10-150			
Tetrachloroethene	0.00466	0.00050	mg/l	0.00500	ND	93	65-130			
Toluene	0.00447	0.00050	mg/l	0.00500	ND	89	60-120			
1,2,4-Trichlorobenzene	0.00561	0.00050	mg/l	0.00500	ND	112	65-140			
1,1,1-Trichloroethane	0.00557	0.00050	mg/l	0.00500	ND	111	65-145			
1,1,2-Trichloroethane	0.00490	0.00050	mg/l	0.00500	ND	98	60-125			
Trichloroethene	0.00511	0.00050	mg/l	0.00500	0.00011	100	65-130			
Vinyl chloride	0.00558	0.00050	mg/l	0.00500	ND	112	60-120			
m,p-Xylenes	0.0104	0.00050	mg/l	0.0100	ND	104	60-135			
o-Xylene	0.00467	0.00050	mg/l	0.00500	ND	93	60-135			
Xylenes, Total	0.0150	0.0015	mg/l	0.0150	ND	100	60-135			
Trihalomethanes, Total	0.0194	0.00050	mg/l	0.0200	ND	97	55-150			
Surrogate: 4-Bromofluorobenzene	*0.00526*		*mg/l*	*0.00500*		*105*	*70-130*			
Surrogate: 1,2-Dichlorobenzene-d4	*0.00534*		*mg/l*	*0.00500*		*107*	*70-130*			

Del Mar Analytical - Phoenix
Ken Baker
Project Manager

The results pertain only to the samples tested in the laboratory. This report shall not be reproduced, except in full, without written permission from Del Mar Analytical.

Del Mar Analytical

17461 Derian Ave., Suite 100, Irvine, CA 92614 (949) 261-1022 FAX (949) 260-3297
1014 E. Cooley Dr., Suite A, Colton, CA 92324 (909) 370-4667 FAX (909) 370-1046
9484 Chesapeake Dr., Suite 805, San Diego, CA 92123 (858) 505-8596 FAX (858) 505-9689
9830 South 51st St., Suite B-120, Phoenix, AZ 85044 (480) 785-0043 FAX (480) 785-0851
2520 E. Sunset Rd. #3, Las Vegas, NV 89120 (702) 798-3620 FAX (702) 798-3621

[redacted]dro Systems, Inc.
1220 S. Park Lane
Tempe, AZ 85281
Attention: Phil Paski

Project ID: 05-400

Report Number: POJ0871

Sampled: 10/31/05
Received: 10/31/05

METHOD BLANK/QC DATA

PURGEABLE ORGANIC COMPOUNDS BY GC/MS (EPA 524.2)

Analyte	Result	Reporting Limit	Units	Spike Level	Source Result	%REC	%REC Limits	RPD	RPD Limit	Data Qualifiers
Batch: C5K0125 Extracted: 11/01/05										
Matrix Spike Dup Analyzed: 11/01/2005 (C5K0125-MSD1)					**Source: COJ0867-01**					
Benzene	0.00516	0.00050	mg/l	0.00500	ND	103	60-125	5	15	
Bromodichloromethane	0.00558	0.00050	mg/l	0.00500	ND	112	70-145	8	15	
Bromoform	0.00507	0.00050	mg/l	0.00500	ND	101	55-145	13	20	
Carbon tetrachloride	0.00623	0.00050	mg/l	0.00500	ND	125	70-150	3	20	
Chlorobenzene	0.00497	0.00050	mg/l	0.00500	ND	99	65-130	7	15	
Chloroform	0.00532	0.00050	mg/l	0.00500	ND	106	55-140	5	15	
Dibromochloromethane	0.00519	0.00050	mg/l	0.00500	ND	104	65-145	9	15	
1,2-Dichlorobenzene	0.00525	0.00050	mg/l	0.00500	ND	105	65-135	7	15	
1,4-Dichlorobenzene	0.00510	0.00050	mg/l	0.00500	ND	102	65-135	5	20	
[redacted]ichloroethane	0.00581	0.00050	mg/l	0.00500	ND	116	65-135	12	15	
1,1-Dichloroethene	0.00536	0.00050	mg/l	0.00500	ND	107	60-135	0	15	
cis-1,2-Dichloroethene	0.00519	0.00050	mg/l	0.00500	ND	104	60-125	5	15	
trans-1,2-Dichloroethene	0.00540	0.00050	mg/l	0.00500	ND	108	60-125	5	15	
1,2-Dichloropropane	0.00508	0.00050	mg/l	0.00500	ND	102	65-120	10	15	
Ethylbenzene	0.00517	0.00050	mg/l	0.00500	ND	103	60-135	4	15	
Methylene chloride	0.00540	0.00050	mg/l	0.00500	0.00017	105	65-135	6	15	
Styrene	0.00452	0.00050	mg/l	0.00500	ND	90	10-150	0	20	
Tetrachloroethene	0.00488	0.00050	mg/l	0.00500	ND	98	65-130	5	15	
Toluene	0.00474	0.00050	mg/l	0.00500	ND	95	60-120	6	15	
1,2,4-Trichlorobenzene	0.00601	0.00050	mg/l	0.00500	ND	120	65-140	7	20	
1,1,1-Trichloroethane	0.00583	0.00050	mg/l	0.00500	ND	117	65-145	5	15	
1,1,2-Trichloroethane	0.00536	0.00050	mg/l	0.00500	ND	107	60-125	9	15	
Trichloroethene	0.00532	0.00050	mg/l	0.00500	0.00011	104	65-130	4	15	
Vinyl chloride	0.00613	0.00050	mg/l	0.00500	ND	123	60-120	9	35	*MI*
m,p-Xylenes	0.0108	0.00050	mg/l	0.0100	ND	108	60-135	4	15	
o-Xylene	0.00490	0.00050	mg/l	0.00500	ND	98	60-135	5	15	
Xylenes, Total	0.0157	0.0015	mg/l	0.0150	ND	105	60-135	5	15	
Trihalomethanes, Total	0.0212	0.00050	mg/l	0.0200	ND	106	55-150	9	15	
Surrogate: 4-Bromofluorobenzene	*0.00522*		*mg/l*	*0.00500*		*104*	*70-130*			
Surrogate: 1,2-Dichlorobenzene-d4	*0.00518*		*mg/l*	*0.00500*		*104*	*70-130*			

[redacted]

Del Mar Analytical - Phoenix
Ken Baker
Project Manager

The results pertain only to the samples tested in the laboratory. This report shall not be reproduced, except in full, without written permission from Del Mar Analytical.

Del Mar Analytical

17461 Derian Ave., Suite 100, Irvine, CA 92614 (949) 261-1022 FAX (949) 260-3297
1014 E. Cooley Dr., Suite A, Colton, CA 92324 (909) 370-4667 FAX (909) 370-1046
9484 Chesapeake Dr., Suite 805, San Diego, CA 92123 (858) 505-8596 FAX (858) 505-9689
9830 South 51st St., Suite B-120, Phoenix, AZ 85044 (480) 785-0043 FAX (480) 785-0851
2520 E. Sunset Rd. #3, Las Vegas, NV 89120 (702) 798-3620 FAX (702) 798-3621

dro Systems, Inc.
1220 S. Park Lane
Tempe, AZ 85281
Attention: Phil Paski

Project ID: 05-400

Report Number: POJ0871

Sampled: 10/31/05
Received: 10/31/05

METHOD BLANK/QC DATA

PURGEABLE ORGANIC COMPOUNDS BY GC/MS (EPA 524.2)

Analyte	Result	Reporting Limit	Units	Spike Level	Source Result	%REC	%REC Limits	RPD	RPD Limit	Data Qualifiers
Batch: C5K0126 Extracted: 11/01/05										
Blank Analyzed: 11/01/2005 (C5K0126-BLK1)										
Benzene	ND	0.00050	mg/l							
Bromodichloromethane	ND	0.00050	mg/l							
Bromoform	ND	0.00050	mg/l							
Carbon tetrachloride	ND	0.00050	mg/l							
Chlorobenzene	ND	0.00050	mg/l							
Chloroform	ND	0.00050	mg/l							
Dibromochloromethane	ND	0.00050	mg/l							
1,2-Dichlorobenzene	ND	0.00050	mg/l							
1,4-Dichlorobenzene	ND	0.00050	mg/l							
1,2-Dichloroethane	ND	0.00050	mg/l							
1,1-Dichloroethene	ND	0.00050	mg/l							
cis-1,2-Dichloroethene	ND	0.00050	mg/l							
trans-1,2-Dichloroethene	ND	0.00050	mg/l							
1,2-Dichloropropane	ND	0.00050	mg/l							
Ethylbenzene	ND	0.00050	mg/l							
Methylene chloride	ND	0.00050	mg/l							
Styrene	ND	0.00050	mg/l							
Tetrachloroethene	ND	0.00050	mg/l							
Toluene	ND	0.00050	mg/l							
1,2,4-Trichlorobenzene	ND	0.00050	mg/l							
1,1,1-Trichloroethane	ND	0.00050	mg/l							
1,1,2-Trichloroethane	ND	0.00050	mg/l							
Trichloroethene	ND	0.00050	mg/l							
Vinyl chloride	ND	0.00050	mg/l							
m,p-Xylenes	ND	0.00050	mg/l							
o-Xylene	ND	0.00050	mg/l							
Xylenes, Total	ND	0.0015	mg/l							
Trihalomethanes, Total	<0.0005	0.00050	mg/l							
Surrogate: 4-Bromofluorobenzene	*0.00422*		*mg/l*	*0.00500*		*84*	*70-130*			
Surrogate: 1,2-Dichlorobenzene-d4	*0.00427*		*mg/l*	*0.00500*		*85*	*70-130*			

Del Mar Analytical - Phoenix
Ken Baker
Project Manager

The results pertain only to the samples tested in the laboratory. This report shall not be reproduced, except in full, without written permission from Del Mar Analytical.

Del Mar Analytical

17461 Derian Ave., Suite 100, Irvine, CA 92614 (949) 261-1022 FAX (949) 260-3297
1014 E. Cooley Dr., Suite A, Colton, CA 92324 (909) 370-4667 FAX (909) 370-1046
9484 Chesapeake Dr., Suite 805, San Diego, CA 92123 (858) 505-8596 FAX (858) 505-9689
9830 South 51st St., Suite B-120, Phoenix, AZ 85044 (480) 785-0043 FAX (480) 785-0851
2520 E. Sunset Rd. #3, Las Vegas, NV 89120 (702) 798-3620 FAX (702) 798-3621

[redacted]dro Systems, Inc.
1220 S. Park Lane
Tempe, AZ 85281
Attention: Phil Paski

Project ID: 05-400

Report Number: POJ0871

Sampled: 10/31/05
Received: 10/31/05

METHOD BLANK/QC DATA

PURGEABLE ORGANIC COMPOUNDS BY GC/MS (EPA 524.2)

Analyte	Result	Reporting Limit	Units	Spike Level	Source Result	%REC	%REC Limits	RPD	RPD Limit	Data Qualifiers
Batch: C5K0126 Extracted: 11/01/05										
LCS Analyzed: 11/01/2005 (C5K0126-BS1)										
Benzene	0.00536	0.00050	mg/l	0.00500		107	70-130			
Bromodichloromethane	0.00531	0.00050	mg/l	0.00500		106	70-130			
Bromoform	0.00500	0.00050	mg/l	0.00500		100	70-130			
Carbon tetrachloride	0.00541	0.00050	mg/l	0.00500		108	70-130			
Chlorobenzene	0.00533	0.00050	mg/l	0.00500		107	70-130			
Chloroform	0.00538	0.00050	mg/l	0.00500		108	70-130			
Dibromochloromethane	0.00539	0.00050	mg/l	0.00500		108	70-130			
1,2-Dichlorobenzene	0.00526	0.00050	mg/l	0.00500		105	70-130			
[redacted]Dichlorobenzene	0.00541	0.00050	mg/l	0.00500		108	70-130			
[redacted]ichloroethane	0.00523	0.00050	mg/l	0.00500		105	70-130			
1,1-Dichloroethene	0.00503	0.00050	mg/l	0.00500		101	70-130			
cis-1,2-Dichloroethene	0.00552	0.00050	mg/l	0.00500		110	70-130			
trans-1,2-Dichloroethene	0.00524	0.00050	mg/l	0.00500		105	70-130			
1,2-Dichloropropane	0.00518	0.00050	mg/l	0.00500		104	70-130			
Ethylbenzene	0.00569	0.00050	mg/l	0.00500		114	70-130			
Methylene chloride	0.00531	0.00050	mg/l	0.00500		106	70-130			
Styrene	0.00506	0.00050	mg/l	0.00500		101	70-130			
Tetrachloroethene	0.00515	0.00050	mg/l	0.00500		103	70-130			
Toluene	0.00516	0.00050	mg/l	0.00500		103	70-130			
1,2,4-Trichlorobenzene	0.00559	0.00050	mg/l	0.00500		112	70-130			
1,1,1-Trichloroethane	0.00530	0.00050	mg/l	0.00500		106	70-130			
1,1,2-Trichloroethane	0.00542	0.00050	mg/l	0.00500		108	70-130			
Trichloroethene	0.00553	0.00050	mg/l	0.00500		111	70-130			
Vinyl chloride	0.00575	0.00050	mg/l	0.00500		115	70-130			
m,p-Xylenes	0.0112	0.00050	mg/l	0.0100		112	70-130			
o-Xylene	0.00568	0.00050	mg/l	0.00500		114	70-130			
Xylenes, Total	0.0169	0.0015	mg/l	0.0150		113	70-130			
Trihalomethanes, Total	0.0211	0.00050	mg/l	0.0200		106	70-130			
Surrogate: 4-Bromofluorobenzene	*0.00505*		*mg/l*	*0.00500*		*101*	*70-130*			
Surrogate: 1,2-Dichlorobenzene-d4	*0.00513*		*mg/l*	*0.00500*		*103*	*70-130*			

[redacted]

Del Mar Analytical - Phoenix
Ken Baker
Project Manager

The results pertain only to the samples tested in the laboratory. This report shall not be reproduced, except in full, without written permission from Del Mar Analytical.

Del Mar Analytical

17461 Derian Ave., Suite 100, Irvine, CA 92614 (949) 261-1022 FAX (949) 260-3297
1014 E. Cooley Dr., Suite A, Colton, CA 92324 (909) 370-4667 FAX (909) 370-1046
9484 Chesapeake Dr., Suite 805, San Diego, CA 92123 (858) 505-8596 FAX (858) 505-9689
9830 South 51st St., Suite B-120, Phoenix, AZ 85044 (480) 785-0043 FAX (480) 785-0851
2520 E. Sunset Rd. #3, Las Vegas, NV 89120 (702) 798-3620 FAX (702) 798-3621

dro Systems, Inc.
1220 S. Park Lane
Tempe, AZ 85281
Attention: Phil Paski

Project ID: 05-400

Report Number: POJ0871

Sampled: 10/31/05
Received: 10/31/05

METHOD BLANK/QC DATA

PURGEABLE ORGANIC COMPOUNDS BY GC/MS (EPA 524.2)

Analyte	Result	Reporting Limit	Units	Spike Level	Source Result	%REC	%REC Limits	RPD	RPD Limit	Data Qualifiers
Batch: C5K0126 Extracted: 11/01/05										
Matrix Spike Analyzed: 11/01/2005 (C5K0126-MS1)					**Source: COJ0822-01**					
Benzene	0.00533	0.00050	mg/l	0.00500	ND	107	60-125			
Bromodichloromethane	0.00529	0.00050	mg/l	0.00500	ND	106	70-145			
Bromoform	0.00467	0.00050	mg/l	0.00500	ND	93	55-145			
Carbon tetrachloride	0.00504	0.00050	mg/l	0.00500	ND	101	70-150			
Chlorobenzene	0.00541	0.00050	mg/l	0.00500	ND	108	65-130			
Chloroform	0.00527	0.00050	mg/l	0.00500	ND	105	55-140			
Dibromochloromethane	0.00521	0.00050	mg/l	0.00500	ND	104	65-145			
1,2-Dichlorobenzene	0.00521	0.00050	mg/l	0.00500	ND	104	65-135			
1,4-Dichlorobenzene	0.00531	0.00050	mg/l	0.00500	ND	106	65-135			
1,2-Dichloroethane	0.00525	0.00050	mg/l	0.00500	ND	105	65-135			
1,1-Dichloroethene	0.00483	0.00050	mg/l	0.00500	ND	97	60-135			
cis-1,2-Dichloroethene	0.00535	0.00050	mg/l	0.00500	ND	107	60-125			
trans-1,2-Dichloroethene	0.00506	0.00050	mg/l	0.00500	ND	101	60-125			
1,2-Dichloropropane	0.00537	0.00050	mg/l	0.00500	ND	107	65-120			
Ethylbenzene	0.00558	0.00050	mg/l	0.00500	ND	112	60-135			
Methylene chloride	0.00496	0.00050	mg/l	0.00500	ND	99	65-135			
Styrene	0.00526	0.00050	mg/l	0.00500	ND	105	10-150			
Tetrachloroethene	0.00502	0.00050	mg/l	0.00500	ND	100	65-130			
Toluene	0.00518	0.00050	mg/l	0.00500	0.00028	98	60-120			
1,2,4-Trichlorobenzene	0.00533	0.00050	mg/l	0.00500	ND	107	65-140			
1,1,1-Trichloroethane	0.00513	0.00050	mg/l	0.00500	ND	103	65-145			
1,1,2-Trichloroethane	0.00539	0.00050	mg/l	0.00500	ND	108	60-125			
Trichloroethene	0.00549	0.00050	mg/l	0.00500	ND	110	65-130			
Vinyl chloride	0.00479	0.00050	mg/l	0.00500	ND	96	60-120			
m,p-Xylenes	0.0112	0.00050	mg/l	0.0100	ND	112	60-135			
o-Xylene	0.00552	0.00050	mg/l	0.00500	ND	110	60-135			
Xylenes, Total	0.0167	0.0015	mg/l	0.0150	ND	111	60-135			
Trihalomethanes, Total	0.0204	0.00050	mg/l	0.0200	ND	102	55-150			
Surrogate: 4-Bromofluorobenzene	*0.00492*		*mg/l*	*0.00500*		*98*	*70-130*			
Surrogate: 1,2-Dichlorobenzene-d4	*0.00497*		*mg/l*	*0.00500*		*99*	*70-130*			

Del Mar Analytical - Phoenix
Ken Baker
Project Manager

The results pertain only to the samples tested in the laboratory. This report shall not be reproduced, except in full, without written permission from Del Mar Analytical.

Del Mar Analytical

17461 Derian Ave., Suite 100, Irvine, CA 92614 (949) 261-1022 FAX (949) 260-3297
1014 E. Cooley Dr., Suite A, Colton, CA 92324 (909) 370-4667 FAX (909) 370-1046
9484 Chesapeake Dr., Suite 805, San Diego, CA 92123 (858) 505-8596 FAX (858) 505-9689
9830 South 51st St., Suite B-120, Phoenix, AZ 85044 (480) 785-0043 FAX (480) 785-0851
2520 E. Sunset Rd. #3, Las Vegas, NV 89120 (702) 798-3620 FAX (702) 798-3621

dro Systems, Inc.
1220 S. Park Lane
Tempe, AZ 85281
Attention: Phil Paski

Project ID: 05-400

Report Number: POJ0871

Sampled: 10/31/05
Received: 10/31/05

METHOD BLANK/QC DATA

PURGEABLE ORGANIC COMPOUNDS BY GC/MS (EPA 524.2)

Analyte	Result	Reporting Limit	Units	Spike Level	Source Result	%REC	%REC Limits	RPD	RPD Limit	Data Qualifiers
Batch: C5K0126 Extracted: 11/01/05										
Matrix Spike Dup Analyzed: 11/01/2005 (C5K0126-MSD1)					**Source: COJ0822-01**					
Benzene	0.00553	0.00050	mg/l	0.00500	ND	111	60-125	4	15	
Bromodichloromethane	0.00554	0.00050	mg/l	0.00500	ND	111	70-145	5	15	
Bromoform	0.00467	0.00050	mg/l	0.00500	ND	93	55-145	0	20	
Carbon tetrachloride	0.00566	0.00050	mg/l	0.00500	ND	113	70-150	12	20	
Chlorobenzene	0.00560	0.00050	mg/l	0.00500	ND	112	65-130	3	15	
Chloroform	0.00554	0.00050	mg/l	0.00500	ND	111	55-140	5	15	
Dibromochloromethane	0.00531	0.00050	mg/l	0.00500	ND	106	65-145	2	15	
1,2-Dichlorobenzene	0.00511	0.00050	mg/l	0.00500	ND	102	65-135	2	15	
1,4-Dichlorobenzene	0.00535	0.00050	mg/l	0.00500	ND	107	65-135	1	20	
ichloroethane	0.00550	0.00050	mg/l	0.00500	ND	110	65-135	5	15	
1,1-Dichloroethene	0.00568	0.00050	mg/l	0.00500	ND	114	60-135	16	15	*R2*
cis-1,2-Dichloroethene	0.00558	0.00050	mg/l	0.00500	ND	112	60-125	4	15	
trans-1,2-Dichloroethene	0.00546	0.00050	mg/l	0.00500	ND	109	60-125	8	15	
1,2-Dichloropropane	0.00570	0.00050	mg/l	0.00500	ND	114	65-120	6	15	
Ethylbenzene	0.00589	0.00050	mg/l	0.00500	ND	118	60-135	5	15	
Methylene chloride	0.00562	0.00050	mg/l	0.00500	ND	112	65-135	12	15	
Styrene	0.00528	0.00050	mg/l	0.00500	ND	106	10-150	0	20	
Tetrachloroethene	0.00560	0.00050	mg/l	0.00500	ND	112	65-130	11	15	
Toluene	0.00554	0.00050	mg/l	0.00500	0.00028	105	60-120	7	15	
1,2,4-Trichlorobenzene	0.00566	0.00050	mg/l	0.00500	ND	113	65-140	6	20	
1,1,1-Trichloroethane	0.00557	0.00050	mg/l	0.00500	ND	111	65-145	8	15	
1,1,2-Trichloroethane	0.00577	0.00050	mg/l	0.00500	ND	115	60-125	7	15	
Trichloroethene	0.00580	0.00050	mg/l	0.00500	ND	116	65-130	5	15	
Vinyl chloride	0.00601	0.00050	mg/l	0.00500	ND	120	60-120	23	35	
m,p-Xylenes	0.0117	0.00050	mg/l	0.0100	ND	117	60-135	4	15	
o-Xylene	0.00571	0.00050	mg/l	0.00500	ND	114	60-135	3	15	
Xylenes, Total	0.0174	0.0015	mg/l	0.0150	ND	116	60-135	4	15	
Trihalomethanes, Total	0.0211	0.00050	mg/l	0.0200	ND	106	55-150	3	15	
Surrogate: 4-Bromofluorobenzene	*0.00514*		*mg/l*	*0.00500*		*103*	*70-130*			
Surrogate: 1,2-Dichlorobenzene-d4	*0.00496*		*mg/l*	*0.00500*		*99*	*70-130*			

Del Mar Analytical - Phoenix
Ken Baker
Project Manager

The results pertain only to the samples tested in the laboratory. This report shall not be reproduced, except in full, without written permission from Del Mar Analytical.

Del Mar Analytical

17461 Derian Ave., Suite 100, Irvine, CA 92614 (949) 261-1022 FAX (949) 260-3297
1014 E. Cooley Dr., Suite A, Colton, CA 92324 (909) 370-4667 FAX (909) 370-1046
9484 Chesapeake Dr., Suite 805, San Diego, CA 92123 (858) 505-8596 FAX (858) 505-9689
9830 South 51st St., Suite B-120, Phoenix, AZ 85044 (480) 785-0043 FAX (480) 785-0851
2520 E. Sunset Rd. #3, Las Vegas, NV 89120 (702) 798-3620 FAX (702) 798-3621

dro Systems, Inc.
1220 S. Park Lane
Tempe, AZ 85281
Attention: Phil Paski

Project ID: 05-400

Report Number: POJ0871

Sampled: 10/31/05
Received: 10/31/05

METHOD BLANK/QC DATA

EDB AND DBCP IN WATER BY GC/ECD (EPA 504.1)

Analyte	Result	Reporting Limit	Units	Spike Level	Source Result	%REC	%REC Limits	RPD	RPD Limit	Data Qualifiers
Batch: C5K0317 Extracted: 11/03/05										
Blank Analyzed: 11/03/2005 (C5K0317-BLK1)										
1,2-Dibromoethane (EDB)	ND	0.000010	mg/l							
1,2-Dibromo-3-chloropropane	ND	0.000020	mg/l							
Surrogate: 4-Bromofluorobenzene	*0.00624*		*mg/l*	*0.00500*		*125*	*65-170*			
LCS Analyzed: 11/03/2005 (C5K0317-BS1)										
1,2-Dibromoethane (EDB)	0.000212	0.000010	mg/l	0.000250		85	70-130			
1,2-Dibromo-3-chloropropane	0.000212	0.000020	mg/l	0.000250		85	70-130			
Surrogate: 4-Bromofluorobenzene	*0.00646*		*mg/l*	*0.00500*		*129*	*65-170*			
LCS Dup Analyzed: 11/04/2005 (C5K0317-BSD1)										
1,2-Dibromoethane (EDB)	0.0000849	0.000010	mg/l	0.000100		85	70-130	0	30	
1,2-Dibromo-3-chloropropane	0.0000814	0.000020	mg/l	0.000100		81	70-130	5	30	
Surrogate: 4-Bromofluorobenzene	*0.00622*		*mg/l*	*0.00500*		*124*	*65-170*			
Matrix Spike Analyzed: 11/03/2005 (C5K0317-MS1)					**Source: POJ0871-01**					
1,2-Dibromoethane (EDB)	0.000212	0.000010	mg/l	0.000250	ND	85	60-130			
1,2-Dibromo-3-chloropropane	0.000198	0.000020	mg/l	0.000250	ND	79	60-140			
Surrogate: 4-Bromofluorobenzene	*0.00611*		*mg/l*	*0.00500*		*122*	*65-170*			
Matrix Spike Analyzed: 11/04/2005 (C5K0317-MS2)					**Source: COK0146-02**					
1,2-Dibromoethane (EDB)	0.000207	0.000010	mg/l	0.000250	ND	83	60-130			
1,2-Dibromo-3-chloropropane	0.000206	0.000020	mg/l	0.000250	ND	82	60-140			
Surrogate: 4-Bromofluorobenzene	*0.00600*		*mg/l*	*0.00500*		*120*	*65-170*			

Del Mar Analytical - Phoenix
Ken Baker
Project Manager

The results pertain only to the samples tested in the laboratory. This report shall not be reproduced, except in full, without written permission from Del Mar Analytical.

Del Mar Analytical

17461 Derian Ave., Suite 100, Irvine, CA 92614 (949) 261-1022 FAX (949) 260-3297
1014 E. Cooley Dr., Suite A, Colton, CA 92324 (909) 370-4667 FAX (909) 370-1046
9484 Chesapeake Dr., Suite 805, San Diego, CA 92123 (858) 505-8596 FAX (858) 505-9689
9830 South 51st St., Suite B-120, Phoenix, AZ 85044 (480) 785-0043 FAX (480) 785-0851
2520 E. Sunset Rd. #3, Las Vegas, NV 89120 (702) 798-3620 FAX (702) 798-3621

[redacted]dro Systems, Inc.
1220 S. Park Lane
Tempe, AZ 85281
Attention: Phil Paski

Project ID: 05-400
Report Number: POJ0871

Sampled: 10/31/05
Received: 10/31/05

METHOD BLANK/QC DATA

ORGANIC COMPOUNDS BY GC/MS (EPA 525.2)

Analyte	Result	Reporting Limit	Units	Spike Level	Source Result	%REC	%REC Limits	RPD	RPD Limit	Data Qualifiers
Batch: C5K0704 Extracted: 11/07/05										
Blank Analyzed: 11/09/2005 (C5K0704-BLK1)										
Alachlor	ND	0.00020	mg/l							
Atrazine	ND	0.00010	mg/l							
Benzo(a)pyrene	ND	0.000020	mg/l							
Di(2-ethylhexyl)adipate	ND	0.00060	mg/l							
Di(2-ethylhexyl)phthalate	ND	0.00060	mg/l							
Hexachlorobenzene	ND	0.00010	mg/l							
Hexachlorocyclopentadiene	ND	0.00010	mg/l							
Simazine	ND	0.000070	mg/l							
[redacted]ogate: 1,3-Dimethyl-2-nitrobenzene	*0.00537*		*mg/l*	*0.00500*		*107*	*70-130*			
[redacted]gate: Triphenylphosphate	*0.00565*		*mg/l*	*0.00500*		*113*	*70-130*			
Surrogate: Perylene-d12	*0.00463*		*mg/l*	*0.00500*		*93*	*70-130*			
LCS Analyzed: 11/09/2005 (C5K0704-BS1)										
Alachlor	0.00539	0.00020	mg/l	0.00500		108	70-130			
Atrazine	0.00547	0.00010	mg/l	0.00500		109	70-130			
Benzo(a)pyrene	0.00502	0.000020	mg/l	0.00500		100	70-130			
Di(2-ethylhexyl)adipate	0.0126	0.00060	mg/l	0.0100		126	70-130			
Di(2-ethylhexyl)phthalate	0.0129	0.00060	mg/l	0.0100		129	70-130			
Hexachlorobenzene	0.00555	0.00010	mg/l	0.00500		111	70-130			
Hexachlorocyclopentadiene	0.0109	0.00010	mg/l	0.0100		109	70-130			
Simazine	0.00524	0.000070	mg/l	0.00500		105	70-130			
Surrogate: 1,3-Dimethyl-2-nitrobenzene	*0.00516*		*mg/l*	*0.00500*		*103*	*70-130*			
Surrogate: Triphenylphosphate	*0.00535*		*mg/l*	*0.00500*		*107*	*70-130*			
Surrogate: Perylene-d12	*0.00472*		*mg/l*	*0.00500*		*94*	*70-130*			
LCS Dup Analyzed: 11/09/2005 (C5K0704-BSD1)										
Alachlor	0.00538	0.00020	mg/l	0.00500		108	70-130	0	30	
Atrazine	0.00562	0.00010	mg/l	0.00500		112	70-130	3	30	
Benzo(a)pyrene	0.00483	0.000020	mg/l	0.00500		97	70-130	4	30	
Di(2-ethylhexyl)adipate	0.0125	0.00060	mg/l	0.0100		125	70-130	1	30	
Di(2-ethylhexyl)phthalate	0.0129	0.00060	mg/l	0.0100		129	70-130	0	30	
Hexachlorobenzene	0.00551	0.00010	mg/l	0.00500		110	70-130	1	30	
Hexachlorocyclopentadiene	0.0116	0.00010	mg/l	0.0100		116	70-130	6	30	
Simazine	0.00539	0.000070	mg/l	0.00500		108	70-130	3	30	
Surrogate: 1,3-Dimethyl-2-nitrobenzene	*0.00496*		*mg/l*	*0.00500*		*99*	*70-130*			
[redacted]gate: Triphenylphosphate	*0.00533*		*mg/l*	*0.00500*		*107*	*70-130*			

Del Mar Analytical - Phoenix
Ken Baker
Project Manager

The results pertain only to the samples tested in the laboratory. This report shall not be reproduced, except in full, without written permission from Del Mar Analytical.

Del Mar Analytical

17461 Derian Ave., Suite 100, Irvine, CA 92614 (949) 261-1022 FAX (949) 260-3297
1014 E. Cooley Dr., Suite A, Colton, CA 92324 (909) 370-4667 FAX (909) 370-1046
9484 Chesapeake Dr., Suite 805, San Diego, CA 92123 (858) 505-8596 FAX (858) 505-9689
9830 South 51st St., Suite B-120, Phoenix, AZ 85044 (480) 785-0043 FAX (480) 785-0851
2520 E. Sunset Rd. #3, Las Vegas, NV 89120 (702) 798-3620 FAX (702) 798-3621

dro Systems, Inc.
1220 S. Park Lane
Tempe, AZ 85281
Attention: Phil Paski

Project ID: 05-400

Report Number: POJ0871

Sampled: 10/31/05
Received: 10/31/05

METHOD BLANK/QC DATA

ORGANIC COMPOUNDS BY GC/MS (EPA 525.2)

Analyte	Result	Reporting Limit	Units	Spike Level	Source Result	%REC	%REC Limits	RPD	RPD Limit	Data Qualifiers
Batch: C5K0704 Extracted: 11/07/05										
LCS Dup Analyzed: 11/09/2005 (C5K0704-BSD1)										
Surrogate: Perylene-d12	*0.00463*		*mg/l*	*0.00500*		*93*	*70-130*			
Matrix Spike Analyzed: 11/09/2005 (C5K0704-MS1)					**Source: COJ0857-01**					
Alachlor	0.00550	0.00020	mg/l	0.00495	ND	111	70-130			
Atrazine	0.00565	0.00010	mg/l	0.00495	ND	114	70-130			
Benzo(a)pyrene	0.00442	0.000020	mg/l	0.00495	ND	89	70-130			
Di(2-ethylhexyl)adipate	0.0132	0.00060	mg/l	0.00990	ND	133	70-130			*M1*
Di(2-ethylhexyl)phthalate	0.0134	0.00060	mg/l	0.00990	ND	135	70-130			*M1*
Hexachlorobenzene	0.00560	0.00010	mg/l	0.00495	ND	113	70-130			
chlorocyclopentadiene	0.0114	0.00010	mg/l	0.00990	ND	115	70-130			
azine	0.00543	0.000070	mg/l	0.00495	ND	110	70-130			
Surrogate: 1,3-Dimethyl-2-nitrobenzene	*0.00489*		*mg/l*	*0.00495*		*99*	*70-130*			
Surrogate: Triphenylphosphate	*0.00548*		*mg/l*	*0.00495*		*111*	*70-130*			
Surrogate: Perylene-d12	*0.00431*		*mg/l*	*0.00495*		*87*	*70-130*			

Del Mar Analytical - Phoenix
Ken Baker
Project Manager

The results pertain only to the samples tested in the laboratory. This report shall not be reproduced, except in full, without written permission from Del Mar Analytical.

Del Mar Analytical

17461 Derian Ave., Suite 100, Irvine, CA 92614 (949) 261-1022 FAX (949) 260-3297
1014 E. Cooley Dr., Suite A, Colton, CA 92324 (909) 370-4667 FAX (909) 370-1046
9484 Chesapeake Dr., Suite 805, San Diego, CA 92123 (858) 505-8596 FAX (858) 505-9689
9830 South 51st St., Suite B-120, Phoenix, AZ 85044 (480) 785-0043 FAX (480) 785-0851
2520 E. Sunset Rd. #3, Las Vegas, NV 89120 (702) 798-3620 FAX (702) 798-3621

dro Systems, Inc.
1220 S. Park Lane
Tempe, AZ 85281
Attention: Phil Paski

Project ID: 05-400
Report Number: POJ0871

Sampled: 10/31/05
Received: 10/31/05

METHOD BLANK/QC DATA

CHLORINATED ACIDS (EPA 515.4)

Analyte	Result	Reporting Limit	Units	Spike Level	Source Result	%REC	%REC Limits	RPD	RPD Limit	Data Qualifiers
Batch: C5K0903 Extracted: 11/09/05										
Blank Analyzed: 11/09/2005 (C5K0903-BLK1)										
Pentachlorophenol	ND	0.000040	mg/l							
Surrogate: 2,4-Dichlorophenylacetic acid	*0.0347*		*mg/l*	*0.0400*		*87*	*70-130*			
LCS Analyzed: 11/09/2005 (C5K0903-BS1)										
2,4-D	0.00164	0.00010	mg/l	0.00200		82	70-130			
Dalapon	0.00165	0.0010	mg/l	0.00200		82	70-130			
Dinoseb	0.00174	0.00020	mg/l	0.00200		87	70-130			
Pentachlorophenol	0.000175	0.000040	mg/l	0.000200		88	70-130			
Picloram	0.00149	0.00010	mg/l	0.00200		74	70-130			
2,4,5-TP (Silvex)	0.000371	0.00020	mg/l	0.000500		74	70-130			
Surrogate: 2,4-Dichlorophenylacetic acid	*0.0340*		*mg/l*	*0.0400*		*85*	*70-130*			
LCS Dup Analyzed: 11/10/2005 (C5K0903-BSD1)										
2,4-D	0.00327	0.00010	mg/l	0.00400		82	70-130	0	20	
Dalapon	0.00298	0.0010	mg/l	0.00400		74	70-130	10	20	
Dinoseb	0.00349	0.00020	mg/l	0.00400		87	70-130	0	20	
Pentachlorophenol	0.000353	0.000040	mg/l	0.000400		88	70-130	0	20	
Picloram	0.00278	0.00010	mg/l	0.00400		70	70-130	6	20	
2,4,5-TP (Silvex)	0.000877	0.00020	mg/l	0.00100		88	70-130	17	20	
Surrogate: 2,4-Dichlorophenylacetic acid	*0.0324*		*mg/l*	*0.0400*		*81*	*70-130*			
Matrix Spike Analyzed: 11/09/2005 (C5K0903-MS1)					**Source: COJ0822-01**					
2,4-D	0.00116	0.00010	mg/l	0.00200	ND	58	70-130			*M2*
Dalapon	0.00159	0.0010	mg/l	0.00200	ND	80	70-130			
Dinoseb	0.00196	0.00020	mg/l	0.00200	ND	98	70-130			
Pentachlorophenol	0.000190	0.000040	mg/l	0.000200	ND	95	70-130			
Picloram	0.00127	0.00010	mg/l	0.00200	ND	64	70-130			*M2*
2,4,5-TP (Silvex)	0.000425	0.00020	mg/l	0.000500	ND	85	70-130			
Surrogate: 2,4-Dichlorophenylacetic acid	*0.0352*		*mg/l*	*0.0400*		*88*	*70-130*			

Del Mar Analytical - Phoenix
Ken Baker
Project Manager

The results pertain only to the samples tested in the laboratory. This report shall not be reproduced, except in full, without written permission from Del Mar Analytical.

Del Mar Analytical

17461 Derian Ave., Suite 100, Irvine, CA 92614 (949) 261-1022 FAX (949) 260-3297
1014 E. Cooley Dr., Suite A, Colton, CA 92324 (909) 370-4667 FAX (909) 370-1046
9484 Chesapeake Dr., Suite 805, San Diego, CA 92123 (858) 505-8596 FAX (858) 505-9689
9830 South 51st St., Suite B-120, Phoenix, AZ 85044 (480) 785-0043 FAX (480) 785-0851
2520 E. Sunset Rd. #3, Las Vegas, NV 89120 (702) 798-3620 FAX (702) 798-3621

dro Systems, Inc.
1220 S. Park Lane
Tempe, AZ 85281
Attention: Phil Paski

Project ID: 05-400

Report Number: POJ0871

Sampled: 10/31/05
Received: 10/31/05

METHOD BLANK/QC DATA

CHLORINATED ACIDS (EPA 515.4)

Analyte	Result	Reporting Limit	Units	Spike Level	Source Result	%REC	%REC Limits	RPD	RPD Limit	Data Qualifiers
Batch: C5K0903 Extracted: 11/09/05										
Matrix Spike Analyzed: 11/09/2005 (C5K0903-MS2)					**Source: COK0246-01**					
2,4-D	0.00140	0.00010	mg/l	0.00200	ND	70	70-130			
Dalapon	0.00224	0.0010	mg/l	0.00200	ND	112	70-130			
Dinoseb	0.00181	0.00020	mg/l	0.00200	ND	90	70-130			
Pentachlorophenol	0.000190	0.000040	mg/l	0.000200	ND	95	70-130			
Picloram	0.00205	0.00010	mg/l	0.00200	ND	102	70-130			
2,4,5-TP (Silvex)	0.000434	0.00020	mg/l	0.000500	ND	87	70-130			
Surrogate: 2,4-Dichlorophenylacetic acid	*0.0335*		*mg/l*	*0.0400*		*84*	*70-130*			

Del Mar Analytical - Phoenix
Ken Baker
Project Manager

The results pertain only to the samples tested in the laboratory. This report shall not be reproduced, except in full, without written permission from Del Mar Analytical.

Del Mar Analytical

17461 Derian Ave., Suite 100, Irvine, CA 92614 (949) 261-1022 FAX (949) 260-3297
1014 E. Cooley Dr., Suite A, Colton, CA 92324 (909) 370-4667 FAX (909) 370-1046
9484 Chesapeake Dr., Suite 805, San Diego, CA 92123 (858) 505-8596 FAX (858) 505-9689
9830 South 51st St., Suite B-120, Phoenix, AZ 85044 (480) 785-0043 FAX (480) 785-0851
2520 E. Sunset Rd. #3, Las Vegas, NV 89120 (702) 798-3620 FAX (702) 798-3621

dro Systems, Inc.
1220 S. Park Lane
Tempe, AZ 85281
Attention: Phil Paski

Project ID: 05-400

Report Number: POJ0871

Sampled: 10/31/05
Received: 10/31/05

METHOD BLANK/QC DATA

CARBAMATES/CARBAMOXYLOXIME PESTICIDES BY HPLC (EPA 531.1)

Analyte	Result	Reporting Limit	Units	Spike Level	Source Result	%REC	%REC Limits	RPD	RPD Limit	Data Qualifiers
Batch: C5K0824 Extracted: 11/08/05										
Blank Analyzed: 11/08/2005 (C5K0824-BLK1)										
Aldicarb Sulfoxide	ND	0.00050	mg/l							
Aldicarb Sulfone	ND	0.00080	mg/l							
Oxamyl	ND	0.0020	mg/l							
Methomyl	ND	0.0010	mg/l							
3-Hydroxycarbofuran	ND	0.0010	mg/l							
Aldicarb	ND	0.00050	mg/l							
Carbofuran	ND	0.00090	mg/l							
Carbaryl	ND	0.0010	mg/l							
Analyzed: 11/08/2005 (C5K0824-BS1)										
Aldicarb Sulfoxide	0.0192	0.00050	mg/l	0.0200		96	80-120			
Aldicarb Sulfone	0.0198	0.00080	mg/l	0.0200		99	80-120			
Oxamyl	0.0195	0.0020	mg/l	0.0200		98	80-120			
Methomyl	0.0194	0.0010	mg/l	0.0200		97	80-120			
3-Hydroxycarbofuran	0.0210	0.0010	mg/l	0.0200		105	80-120			
Aldicarb	0.0207	0.00050	mg/l	0.0200		104	80-120			
Carbofuran	0.0197	0.00090	mg/l	0.0200		98	80-120			
Carbaryl	0.0202	0.0010	mg/l	0.0200		101	80-120			
LCS Dup Analyzed: 11/09/2005 (C5K0824-BSD1)										
Aldicarb Sulfoxide	0.0184	0.00050	mg/l	0.0200		92	80-120	4	20	
Aldicarb Sulfone	0.0193	0.00080	mg/l	0.0200		97	80-120	2	20	
Oxamyl	0.0193	0.0020	mg/l	0.0200		97	80-120	1	20	
Methomyl	0.0191	0.0010	mg/l	0.0200		96	80-120	1	20	
3-Hydroxycarbofuran	0.0206	0.0010	mg/l	0.0200		103	80-120	2	20	
Aldicarb	0.0185	0.00050	mg/l	0.0200		92	80-120	12	20	
Carbofuran	0.0192	0.00090	mg/l	0.0200		96	80-120	2	20	
Carbaryl	0.0197	0.0010	mg/l	0.0200		98	80-120	3	20	

Del Mar Analytical - Phoenix
Ken Baker
Project Manager

The results pertain only to the samples tested in the laboratory. This report shall not be reproduced, except in full, without written permission from Del Mar Analytical.

Del Mar Analytical

17461 Derian Ave., Suite 100, Irvine, CA 92614 (949) 261-1022 FAX (949) 260-3297
1014 E. Cooley Dr., Suite A, Colton, CA 92324 (909) 370-4667 FAX (909) 370-1046
9484 Chesapeake Dr., Suite 805, San Diego, CA 92123 (858) 505-8596 FAX (858) 505-9689
9830 South 51st St., Suite B-120, Phoenix, AZ 85044 (480) 785-0043 FAX (480) 785-0851
2520 E. Sunset Rd. #3, Las Vegas, NV 89120 (702) 798-3620 FAX (702) 798-3621

dro Systems, Inc.
1220 S. Park Lane
Tempe, AZ 85281
Attention: Phil Paski

Project ID: 05-400

Report Number: POJ0871

Sampled: 10/31/05
Received: 10/31/05

METHOD BLANK/QC DATA

CARBAMATES/CARBAMOXYLOXIME PESTICIDES BY HPLC (EPA 531.1)

Analyte	Result	Reporting Limit	Units	Spike Level	Source Result	%REC	%REC Limits	RPD	RPD Limit	Data Qualifiers
Batch: C5K0824 Extracted: 11/08/05										
Matrix Spike Analyzed: 11/08/2005 (C5K0824-MS1)					**Source: COJ0799-01**					
Aldicarb Sulfoxide	0.0183	0.00050	mg/l	0.0200	ND	92	65-135			
Aldicarb Sulfone	0.0186	0.00080	mg/l	0.0200	ND	93	65-135			
Oxamyl	0.0183	0.0020	mg/l	0.0200	ND	92	65-135			
Methomyl	0.0183	0.0010	mg/l	0.0200	ND	92	65-135			
3-Hydroxycarbofuran	0.0195	0.0010	mg/l	0.0200	ND	98	65-135			
Aldicarb	0.0200	0.00050	mg/l	0.0200	ND	100	65-135			
Carbofuran	0.0184	0.00090	mg/l	0.0200	ND	92	65-135			
Carbaryl	0.0187	0.0010	mg/l	0.0200	ND	94	65-135			

Del Mar Analytical - Phoenix
Ken Baker
Project Manager

The results pertain only to the samples tested in the laboratory. This report shall not be reproduced, except in full, without written permission from Del Mar Analytical.

Del Mar Analytical

17461 Derian Ave., Suite 100, Irvine, CA 92614 (949) 261-1022 FAX (949) 260-3297
1014 E. Cooley Dr., Suite A, Colton, CA 92324 (909) 370-4667 FAX (909) 370-1046
9484 Chesapeake Dr., Suite 805, San Diego, CA 92123 (858) 505-8596 FAX (858) 505-9689
9830 South 51st St., Suite B-120, Phoenix, AZ 85044 (480) 785-0043 FAX (480) 785-0851
2520 E. Sunset Rd. #3, Las Vegas, NV 89120 (702) 798-3620 FAX (702) 798-3621

Hydro Systems, Inc.
1220 S. Park Lane
Tempe, AZ 85281
Attention: Phil Paski

Project ID: 05-400

Report Number: POJ0871

Sampled: 10/31/05
Received: 10/31/05

METHOD BLANK/QC DATA

ENDOTHALL (EPA 548.1)

Analyte	Result	Reporting Limit	Units	Spike Level	Source Result	%REC	%REC Limits	RPD	RPD Limit	Data Qualifiers
Batch: C5K0316 Extracted: 11/03/05										
Blank Analyzed: 11/03/2005 (C5K0316-BLK1)										
Endothall	ND	0.0090	mg/l							
LCS Analyzed: 11/03/2005 (C5K0316-BS1)										
Endothall	0.0400	0.0090	mg/l	0.0500		80	15-140			
LCS Dup Analyzed: 11/03/2005 (C5K0316-BSD1)										
Endothall	0.0416	0.0090	mg/l	0.0500		83	15-140	4	45	
Matrix Spike Analyzed: 11/03/2005 (C5K0316-MS1)					**Source: COJ0857-01**					
Endothall	0.00486	0.0090	mg/l	0.0500	ND	10	15-140			M2

Del Mar Analytical - Phoenix
Ken Baker
Project Manager

The results pertain only to the samples tested in the laboratory. This report shall not be reproduced, except in full, without written permission from Del Mar Analytical.

Del Mar Analytical

17461 Derian Ave., Suite 100, Irvine, CA 92614 (949) 261-1022 FAX (949) 260-3297
1014 E. Cooley Dr., Suite A, Colton, CA 92324 (909) 370-4667 FAX (909) 370-1046
9484 Chesapeake Dr., Suite 805, San Diego, CA 92123 (858) 505-8596 FAX (858) 505-9689
9830 South 51st St., Suite B-120, Phoenix, AZ 85044 (480) 785-0043 FAX (480) 785-0851
2520 E. Sunset Rd. #3, Las Vegas, NV 89120 (702) 798-3620 FAX (702) 798-3621

dro Systems, Inc.
1220 S. Park Lane
Tempe, AZ 85281
Attention: Phil Paski

Project ID: 05-400

Report Number: POJ0871

Sampled: 10/31/05
Received: 10/31/05

METHOD BLANK/QC DATA

GLYPHOSATE (EPA 547)

Analyte	Result	Reporting Limit	Units	Spike Level	Source Result	%REC	%REC Limits	RPD	RPD Limit	Data Qualifiers
Batch: C5K0124 Extracted: 11/01/05										
Blank Analyzed: 11/01/2005 (C5K0124-BLK1)										
Glyphosate	ND	0.0060	mg/l							
LCS Analyzed: 11/01/2005 (C5K0124-BS1)										
Glyphosate	0.0248	0.0060	mg/l	0.0250		99	80-125			
LCS Dup Analyzed: 11/01/2005 (C5K0124-BSD1)										
Glyphosate	0.0245	0.0060	mg/l	0.0250		98	80-125	1	25	
Matrix Spike Analyzed: 11/01/2005 (C5K0124-MS1)					**Source: COJ0639-01**					
Glyphosate	0.0257	0.0060	mg/l	0.0250	ND	103	80-125			

Del Mar Analytical - Phoenix
Ken Baker
Project Manager

The results pertain only to the samples tested in the laboratory. This report shall not be reproduced, except in full, without written permission from Del Mar Analytical.

Del Mar Analytical

17461 Derian Ave., Suite 100, Irvine, CA 92614 (949) 261-1022 FAX (949) 260-3297
1014 E. Cooley Dr., Suite A, Colton, CA 92324 (909) 370-4667 FAX (909) 370-1046
9484 Chesapeake Dr., Suite 805, San Diego, CA 92123 (858) 505-8596 FAX (858) 505-9689
9830 South 51st St., Suite B-120, Phoenix, AZ 85044 (480) 785-0043 FAX (480) 785-0851
2520 E. Sunset Rd. #3, Las Vegas, NV 89120 (702) 798-3620 FAX (702) 798-3621

Hydro Systems, Inc.
1220 S. Park Lane
Tempe, AZ 85281
Attention: Phil Paski

Project ID: 05-400

Report Number: POJ0871

Sampled: 10/31/05
Received: 10/31/05

METHOD BLANK/QC DATA

DIQUAT (EPA 549.2)

Analyte	Result	Reporting Limit	Units	Spike Level	Source Result	%REC	%REC Limits	RPD	RPD Limit	Data Qualifiers
Batch: C5K0120 Extracted: 11/01/05										
Blank Analyzed: 11/03/2005 (C5K0120-BLK1)										
Diquat	ND	0.00040	mg/l							
LCS Analyzed: 11/03/2005 (C5K0120-BS1)										
Diquat	0.0356	0.00040	mg/l	0.0400		89	70-120			
LCS Dup Analyzed: 11/03/2005 (C5K0120-BSD1)										
Diquat	0.0382	0.00040	mg/l	0.0400		96	70-120	7	20	
Matrix Spike Analyzed: 11/03/2005 (C5K0120-MS1)					**Source: COK0073-02**					
Diquat	0.0124	0.00040	mg/l	0.0400	ND	31	70-120			*M2*

Del Mar Analytical - Phoenix
Ken Baker
Project Manager

The results pertain only to the samples tested in the laboratory. This report shall not be reproduced, except in full, without written permission from Del Mar Analytical.

Del Mar Analytical

17461 Derian Ave., Suite 100, Irvine, CA 92614 (949) 261-1022 FAX (949) 260-3297
1014 E. Cooley Dr., Suite A, Colton, CA 92324 (909) 370-4667 FAX (909) 370-1046
9484 Chesapeake Dr., Suite 805, San Diego, CA 92123 (858) 505-8596 FAX (858) 505-9689
9830 South 51st St., Suite B-120, Phoenix, AZ 85044 (480) 785-0043 FAX (480) 785-0851
2520 E. Sunset Rd. #3, Las Vegas, NV 89120 (702) 798-3620 FAX (702) 798-3621

dro Systems, Inc.
1220 S. Park Lane
Tempe, AZ 85281
Attention: Phil Paski

Project ID: 05-400

Report Number: POJ0871

Sampled: 10/31/05
Received: 10/31/05

DATA QUALIFIERS AND DEFINITIONS

-	Negative Ion Balance
M1	Matrix spike recovery was high, the method control sample recovery was acceptable
M2	Matrix spike recovery was low, the method control sample recovery was acceptable
M3	The accuracy of the spike recovery value is reduced since the analyte concentration in the sample is disproportionate to spike level. The method control sample recovery was acceptable.
N1	See case narrative.
R1	RPD exceeded the method control limit. See case narrative.
R2	RPD exceeded the laboratory control limit. See case narrative.
ND	Analyte NOT DETECTED at or above the reporting limit or MDL, if MDL is specified
RPD	Relative Percent Difference
SI Units	Saturation Index Units

Del Mar Analytical - Phoenix
Ken Baker
Project Manager

The results pertain only to the samples tested in the laboratory. This report shall not be reproduced, except in full, without written permission from Del Mar Analytical.

Del Mar Analytical

17461 Derian Ave., Suite 100, Irvine, CA 92614 (949) 261-1022 FAX (949) 260-3297
1014 E. Cooley Dr., Suite A, Colton, CA 92324 (909) 370-4667 FAX (909) 370-1046
9484 Chesapeake Dr., Suite 805, San Diego, CA 92123 (858) 505-8596 FAX (858) 505-9689
9830 South 51st St., Suite B-120, Phoenix, AZ 85044 (480) 785-0043 FAX (480) 785-0851
2520 E. Sunset Rd. #3, Las Vegas, NV 89120 (702) 798-3620 FAX (702) 798-3621

dro Systems, Inc.
1220 S. Park Lane
Tempe, AZ 85281
Attention: Phil Paski

Project ID: 05-400

Report Number: POJ0871

Sampled: 10/31/05
Received: 10/31/05

Certification Summary

Del Mar Analytical - Phoenix

Method	Matrix	Nelac	Arizona
1613A/1613B	Water		
EPA 150.1	Water		X
EPA 180.1	Water		X
EPA 200.7	Water		X
EPA 200.9	Water		X
EPA 245.1	Water		X
EPA 258.1	Water		X
EPA 273.1	Water		X
EPA 300.0	Water		X
EPA 504.1	Water		
EPA 508	Water		
EPA 515.4	Water		
EPA 524.2	Water		
EPA 525.2	Water		
EPA 531.1	Water		
EPA 547	Water		
EPA 548.1	Water		
EPA 549.1	Water		
EPA 900.0	Water		
SM2320B	Water		X
SM2330B	Water		X
SM2340B	Water		X
SM2510B	Water		X
SM2540C	Water		X
SM4500-CN-G	Water		
SM9223B	Water		X
TEM	Water		

Nevada and NELAP provide analyte specific accreditations. Analyte specific information for Del Mar Analytical may be obtained by contacting the laboratory or visiting our website at www.dmalabs.com.

Subcontracted Laboratories

Columbia Analytical Services - Kelso *Arizona Cert #AZ0339*
1317 So. 13th Ave. - Kelso, WA 98626
Analysis Performed: 508.1 AZ Regulated-C
Samples: POJ0871-01

Del Mar Analytical *California Cert #1169, Arizona Cert #AZ0062, Nevada Cert #CA0242*
1014 E. Cooley Dr., Ste. A - Colton, CA 92324
Method Performed: EPA 504.1
Samples: POJ0871-01, POJ0871-02

Del Mar Analytical - Phoenix
Ken Baker
Project Manager

The results pertain only to the samples tested in the laboratory. This report shall not be reproduced, except in full, without written permission from Del Mar Analytical.

17461 Derian Ave., Suite 100, Irvine, CA 92614 (949) 261-1022 FAX (949) 260-3297
1014 E. Cooley Dr., Suite A, Colton, CA 92324 (909) 370-4667 FAX (909) 370-1046
9484 Chesapeake Dr., Suite 805, San Diego, CA 92123 (858) 505-8596 FAX (858) 505-9689
9830 South 51st St., Suite B-120, Phoenix, AZ 85044 (480) 785-0043 FAX (480) 785-0851
2520 E. Sunset Rd. #3, Las Vegas, NV 89120 (702) 798-3620 FAX (702) 798-3621

Del Mar Analytical

[redacted]ro Systems, Inc.
1220 S. Park Lane
Tempe, AZ 85281
Attention: Phil Paski

Project ID: 05-400

Report Number: POJ0871

Sampled: 10/31/05
Received: 10/31/05

Del Mar Analytical *California Cert #1169, Arizona Cert #AZ0062, Nevada Cert #CA0242*
1014 E. Cooley Dr., Ste. A - Colton, CA 92324
Method Performed: EPA 515.4
Samples: POJ0871-01
Method Performed: EPA 524.2
Samples: POJ0871-01, POJ0871-02
Method Performed: EPA 525.2
Samples: POJ0871-01
Method Performed: EPA 531.1
Samples: POJ0871-01
Method Performed: EPA 547
Samples: POJ0871-01
Method Performed: EPA 548.1
Samples: POJ0871-01
Method Performed: EPA 549.2
Samples: POJ0871-01

Del Mar Analytical *NELAC Cert #01108CA, California Cert #1197, Arizona Cert #AZ0671, Nevada Cert #CA72-2002-63*
17461 Derian Ave. Suite 100 - Irvine, CA 92614
Method Performed: EPA 200.7
Samples: POJ0871-01
Method Performed: SM4500-CN-G
Samples: POJ0871-01

Fiberquant Analytical *Arizona Cert #AZ0633*
5025 S.33rd Street - Phoenix, AZ 85040
Analysis Performed: Asbestos By TEM
Samples: POJ0871-01

Pace Analytical *Arizona Cert #AZ0014*
1700 Elm Street, Suite 200 - Minneapolis, MN 55414
Analysis Performed: Dioxin only (1613B)O
Samples: POJ0871-01

Radiation Safety Engineering, Inc. *Arizona Cert #AZ0462*
3245 N. Washington St. - Chandler, AZ 85225-1121
Analysis Performed: Gross Alpha
Samples: POJ0871-01
Analysis Performed: Gross Beta
Samples: POJ0871-01

Del Mar Analytical - Phoenix
Ken Baker
Project Manager

The results pertain only to the samples tested in the laboratory. This report shall not be reproduced, except in full, without written permission from Del Mar Analytical.

Del Mar Analytical

17461 Derian Ave. Suite 100, Irvine, CA 92614 Ph (949) 261-1022 Fax (949) 261-1228
1014 E. Cooley Dr., Suite A, Colton, CA 92324 Ph (909) 370-4667 Fax (909) 370-1046
9484 Chesapeake Drive, Suite 805, San Diego, CA 92123 Ph (619) 505-9596 Fax (619) 505-9689
9830 South 51st Street, Suite B-120, Phoenix, AZ 85044 Ph (480) 785-0043 Fax (480) 785-0851
2520 E. Sunset Rd., Suite #3, Las Vegas, NV 89120 Ph (702) 798-3620 Fax (702) 798-3621

SUBCONTRACT ORDER - PROJECT # POJ0871

SENDING LABORATORY:
Del Mar Analytical - Phoenix
9830 South 51st Street, Suite B-120
Phoenix, AZ 85044
Phone: (480) 785-0043
Fax: (480) 785-0851
Project Manager: Ken Baker

RECEIVING LABORATORY:
Del Mar Analytical - Colton
1014 E. Cooley Dr., Ste. A
Colton, CA 92324
Phone :(909) 370-4667
Fax: (909) 370-1046

COK0007

Analysis	Expiration	Due	Comments
Sample ID: POJ0871-01 Water	**Sampled: 10/31/05 10:00**		
504.1 AZ EDB, DBCP-C	11/14/05 10:00	11/14/05 12:00	dmac
515.4 AZ Chlorinated Acids-C	11/14/05 10:00	11/14/05 12:00	dmac
524.2 AZ Regulated-C	11/14/05 10:00	11/14/05 12:00	dmac
525.2 AZ Regulated-C	11/14/05 10:00	11/14/05 12:00	dmac
531.1 AZ Carbamates-C	11/07/05 10:00	11/14/05 12:00	dmac
547 AZ Glyphosate-C	11/14/05 10:00	11/14/05 12:00	dmac
548.1 AZ Endothall-C	11/07/05 10:00	11/14/05 12:00	dmac
549.2 AZ Diquat/Paraquat-C	11/07/05 10:00	11/14/05 12:00	dmac

Containers Supplied:
40 ml VOA w/Na2S2O3 (POJ0871-01A)
40 ml VOA w/Na2S2O3 (POJ0871-01B)
40 ml VOA w/Na2S2O3 (POJ0871-01C)
250 ml Amber w/Na2S2O3 (POJ0871-01F)
250 ml Amber w/Na2S2O3 (POJ0871-01G)
40 ml VOA w/C6H8O6+HCL (POJ0871-01H)
40 ml VOA w/C6H8O6+HCL (POJ0871-01I)
40 ml VOA w/C6H8O6+HCL (POJ0871-01J)
1 L Amber w/Na2SO3 + HCL (POJ0871-01K)
1 L Amber w/Na2SO3 + HCL (POJ0871-01L)
60 ml VOA w/Na2S2O3+MCAA (POJ0871-01M)
60 ml VOA w/Na2S2O3+MCAA (POJ0871-01N)
60 ml VOA w/Na2S2O3+MCAA (POJ0871-01O)
60 ml VOA w/Na2S2O3 (POJ0871-01P)
60 ml VOA w/Na2S2O3 (POJ0871-01Q)
60 ml VOA w/Na2S2O3 (POJ0871-01R)
1 L NM Amber w/Na2S2O3 (POJ0871-01S)
1 L NM Amber w/Na2S2O3 (POJ0871-01T)
1 L Brown Poly w/H2SO4+Na2SO3 (POJ0871-01U)

Sample ID: POJ0871-02 Water		**Sampled: 10/31/05 10:00**					
504.1 AZ EDB, DBCP-C	11/14/05 10:00	11/14/05 12:00	dmac				
524.2 AZ Regulated-C	11/14/05 10:00	11/14/05 12:00	dmac				

Containers Supplied:
40 ml VOA w/HCL (POJ0871-02A)
40 ml VOA w/Na2S2O3 (POJ0871-02B)

Released By	Date	Time	Received By	Date	Time
	10/31/5	1700	Fed-Ex	10/31/5	1700
Released By	Date	Time	Received By	Date	Time
				11/1/05	915

Del Mar Analytical

17461 Derian Ave. Suite 100, Irvine, CA 92614 Ph (949) 261-1022 Fax (949) 261-1228
1014 E. Cooley Dr., Suite A, Colton, CA 92324 Ph (909) 370-4667 Fax (909) 370-1046
9484 Chesapeake Drive, Suite 805, San Diego, CA 92123 Ph (619) 505-9596 Fax (619) 505-9689
9830 South 51st Street, Suite B-120, Phoenix, AZ 85044 Ph (480) 785-0043 Fax (480) 785-0851
2520 E. Sunset Rd., Suite #3, Las Vegas, NV 89120 Ph (702) 798-3620 Fax (702) 798-3621

SUBCONTRACT ORDER - PROJECT # POJ0871 IOK0036

SENDING LABORATORY:

Del Mar Analytical - Phoenix
9830 South 51st Street, Suite B-120
Phoenix, AZ 85044
Phone: (480) 785-0043
Fax: (480) 785-0851
Project Manager: Ken Baker

RECEIVING LABORATORY:

Del Mar Analytical - Irvine
17461 Derian Ave. Suite 100
Irvine, CA 92614
Phone :(949) 261-1022
Fax: (949) 261-1228

433

Analysis	Expiration	Due	Comments
Sample ID: POJ0871-01 Water	**Sampled: 10/31/05 10:00**		
Cyanide, Amenable	11/14/05 10:00	11/09/05 12:00	dmai
ICP Sodium - I	04/29/06 10:00	11/09/05 12:00	dmai

Containers Supplied:

1 L Poly w/HNO3 (POJ0871-01W)
1 L Poly w/NaOH (POJ0871-01Y)

ES

SAMPLE INTEGRITY:

All containers intact: ☑ Yes ☐ No
Custody Seals Present: ☐ Yes ☑ No
Sample labels/COC agree: ☑ Yes ☐ No
Samples Preserved Properly: ☑ Yes ☐ No
Samples Received On Ice:: ☑ Yes ☐ No
Samples Received at (temp): 4

Released By	Date	Time	Received By	Date	Time
	10/31/5	1700	Fed. Ex	10/31/5	1700
				11.01.05	11:10

FIBERQUANT ANALYTICAL SERVICES

Determination of Asbestos in Water using TEM

JobNumber: 200508178

Client: **DEL MAR ANALYTICAL**

9830 S 51ST ST STE B120

#Name? 85044-0000

Office Phone: (480) 785-0043

FAX: (480) 785-0851

 # Samples: 1 TEM **Rec:** 11/1/2005 **Method:** EPA 100.1 TEM Water

Client Job: POJ0871 **PO Number:**

Report Date: #Name? **Date Analyzed:** 11/3/2005 **Routing Number:** -

Method and Analysis Information: **Fiberquant Internal SOP:** TEMw

Samples are analyzed using the protocols given in EPA method 100.1, as amended by the 1993 EPA guidence. Samples should be un-preserved water in 1 L containers having about 200 ml headspace for shaking. There is a 48 hr deadline between the time the sample is taken and the time it is filtered to minimize loss of asbestos fibers due to biological interference. Each sample is shook for 1 minute, and ultrasonicated for at least 10 minutes, shaking every 5 minutes to disperse any fibers that are present. A measured amount of sample is then filtered through a 0.1 um pore size polycarbonate filter, backed by a 5 um pore size MCE filter and a glass frit. Several volumes of liquid may be filtered for each sample in order to assure that a properly loaded sample is obtained. A portion of each resulting filter (and blanks) is then coated with 100-200 um of carbon in a Denton 502A Carbon Evaporator. The carbon encapsulates all of the larger and most of the smaller particulate on the filter. Three mm square pieces of the coated filter are placed on three or more copper TEM grids, and the original filter material is dissolved away in a Jaffe wick and/or condensation washer. The finished replica in carbon containing the particulate is then examined on a JEOL 1200 or Phillips CM 10 transmission electrom microscope at 10,000 to 20,000x magnification. All asbestos fibers >10um in length are tabulated and characterized as asbestos or non-asbestos using a combination of morphology, electron diffraction characteristics, and elemental composition. The result is calculated in millions of fibers per liter (MFL). The grid is scanned until 20 grid openings have been observed, or until an analytical sensitivity (the hypothetical observation of one fiber) of 0.2 MFL has been reached. The nominal 20 grid opening cut-off is used for those samples containing so much non-asbestos particulate that the desired analytical sensitivity is impractical to attain.

The method was designed to determine EPA drinking water compliance. The standard for drinking water is <7 MFL as measured by this method. Fiberquant maintains Arizona Environmental Laboratory license #AZ0633 covering EPA Method 100.1.

Overall, the coefficient of variation can be expected to be approximately 0.5 for analyses in which >20 asbestos fibers have been counted, ranging up to 1.00 for analyses in which only a few asbestos fibers are counted.

The analysis was performed under an ongoing quality assurance program which includes: Lab blanks, prepared with each set of samples, and analyzed at the rate of one per 25 samples analyzed. Each analyst has suitable background credentials, such as at least a bachelor's degree in geology or chemistry, and has undergone extensive 2-6 month training in TEM techniques and mineralogy specific to TEM asbestos analysis before being allowed to perform client analyses. Unknown reference samples are routinely identified to ensure that each analyst can collect and correctly interpret TEM information. The TEM is aligned and its performance checked daily. Magnification, electron diffraction pattern size, and analytical performance characteristics are calibrated routinely. Samples are re-analyzed sometimes by the same analyst and sometimes by a different analyst in order to determine accuracy and precision. The total of QC analyses (blanks + recounts) are greater than 10% of analyzed samples. Each analyst participates in interlab round robins and proficiency testing in order to show correlation to other lab's analyses. Because TEM samples are not analyzed in batches, which would be traditional for most water analyses, and not every blank is read, and not every sample has a duplicate or replicate analysis associated with it, it is not possible to include a traditional QC report with the analysis. QC reports are produced monthly, and are available on request. All quality checks performed for these samples were in control except as detailed in the "Analytical Notes" below. Fiberquant is accredited by NVLAP to perform TEM analysis of asbestos in air samples, and has been found to be proficient in the EPA water proficiency program. Accreditation or proficiency does not imply endorsement by the EPA, any other United States governmental agency or any private agency or association. Each lab analysis refers only to the sample tested, and may not, due to the sampling process, be representative of the material sampled. This report may not be reproduced except in full, without the approval of Fiberquant Analytical Services.

Some results may have been calculated using client supplied data, such as volume or area sampled, for which Fiberquant assumes no liability for accuracy.

Job Analysis Notes:

High levels of particulate material did not permit analysis to the desired sensitivity of 0.2 million fibers per liter (MFL).

Sampled:	10/31/2005	10:00	**By:**	Miles McGinnis
Received:	11/1/2005	8:02		
Filtered:	11/1/2005	9:30		
Analyzed:	11/3/2005	14:50		

Analysis Results:

Lab Number	Client Number	Date	Condition	Filtered Vol (ml)	#GOs	GO Area	MFL	AsbestosType	Sensitivity (MFL)
							Job Number:		200508178
2005-08178- 1	POJ0871	10/31/2005	acceptable	2	20	0.00928	<2.6	-	2.6

Analyst: #Name?

Printed: #Name?

Original Print Date: 03-Nov-05

Larry S. Pierce, Approved Accreditation Signatory

QA Report: Job Number: 200508178

1. Calibrations		
TEM magnification. date of last.	10/6/2005	
TEM camera constant. date of last.	11/1/2005	
EDS performance check (k-factors, resolution, low-e perf.). date of last.	7/7/2005	
TEM stage drift, minimum beam size. date of last.	7/7/2005	
plasma asher. date of last.	10/3/2005	
2. Blanks (1/25 samples required)	X not required this job	_____ str/mm2
3. Recounts (1/17 samples required)	X not required this job	_____ Rel%Diff
4. Analyst Performance		
NVLAP proficiency testing	X current	
verified counts. cum. % true positives	89.1	
verification of diffraction pattern identifications. cum. % correct	99.5	
verification of EDS spectra. cum. % correct	95.2	

1317 South 13th Avenue P.O. Box 479 Kelso, Washington 98626 (360) 577-7222 (360) 636-1068 fax

Columbia Analytical Services INC.
An Employee - Owned Company

November 16, 2005 Service Request No: K0505403

Linda Eshelman
Del Mar Analytical, Incorporated
9830 South 51st Street
Suite B-120
Phoenix, AZ 85044

RE: Arizona Drinking Water

Dear Linda:

Enclosed are the results of the sample(s) submitted to our laboratory on November 2, 2005. For your reference, these analyses have been assigned our service request number K0505403.

All analyses were performed according to our laboratory's quality assurance program. The test results meet requirements of the NELAC standards except as noted in the case narrative report. All results are intended to be considered in their entirety, and Columbia Analytical Services, Inc. (CAS) is not responsible for use of less than the complete report. Results apply only to the items submitted to the laboratory for analysis and individual items (samples) analyzed, as listed in the report.

Please call if you have any questions. My extension is 3275.

Respectfully submitted,

Columbia Analytical Services, Inc.

Elissa Erickson

Elissa Erickson
Project Chemist

EE/jeb

Acronyms

ASTM	American Society for Testing and Materials
A2LA	American Association for Laboratory Accreditation
CARB	California Air Resources Board
CAS Number	Chemical Abstract Service registry Number
CFC	Chlorofluorocarbon
CFU	Colony-Forming Unit
DEC	Department of Environmental Conservation
DEQ	Department of Environmental Quality
DHS	Department of Health Services
DOE	Department of Ecology
DOH	Department of Health
EPA	U. S. Environmental Protection Agency
ELAP	Environmental Laboratory Accreditation Program
GC	Gas Chromatography
GC/MS	Gas Chromatography/Mass Spectrometry
LUFT	Leaking Underground Fuel Tank
M	Modified
MCL	Maximum Contaminant Level is the highest permissible concentration of a substance allowed in drinking water as established by the USEPA.
MDL	Method Detection Limit
MPN	Most Probable Number
MRL	Method Reporting Limit
NA	Not Applicable
NC	Not Calculated
NCASI	National Council of the Paper Industry for Air and Stream Improvement
ND	Not Detected
NIOSH	National Institute for Occupational Safety and Health
PQL	Practical Quantitation Limit
RCRA	Resource Conservation and Recovery Act
SIM	Selected Ion Monitoring
TPH	Total Petroleum Hydrocarbons
tr	Trace level is the concentration of an analyte that is less than the PQL but greater than or equal to the MDL.

Inorganic Data Qualifiers

*	The result is an outlier. See case narrative.
#	The control limit criteria is not applicable. See case narrative.
B	The analyte was found in the associated method blank at a level that is significant relative to the sample result.
E	The result is an estimate amount because the value exceeded the instrument calibration range.
J	The result is an estimated concentration that is less than the MRL but greater than or equal to the MDL.
U	The compound was analyzed for, but was not detected ("Non-detect") at or above the MRL/MDL.
i	The MRL/MDL has been elevated due to a matrix interference.
X	See case narrative.

Metals Data Qualifiers

#	The control limit criteria is not applicable. See case narrative.
B	The result is an estimated concentration that is less than the MRL but greater than or equal to the MDL.
E	The percent difference for the serial dilution was greater than 10%, indicating a possible matrix interference in the sample.
M	The duplicate injection precision was not met.
N	The Matrix Spike sample recovery is not within control limits. See case narrative.
S	The reported value was determined by the Method of Standard Additions (MSA).
U	The compound was analyzed for, but was not detected ("Non-detect") at or above the MRL/MDL.
W	The post-digestion spike for furnace AA analysis is out of control limits, while sample absorbance is less than 50% of spike absorbance.
i	The MRL/MDL has been elevated due to a matrix interference.
X	See case narrative.
*	The duplicate analysis not within control limits. See case narrative.
+	The correlation coefficient for the MSA is less than 0.995.

Organic Data Qualifiers

*	The result is an outlier. See case narrative.
#	The control limit criteria is not applicable. See case narrative.
A	A tentatively identified compound, a suspected aldol-condensation product.
B	The analyte was found in the associated method blank at a level that is significant relative to the sample result.
C	The analyte was qualitatively confirmed using GC/MS techniques, pattern recognition, or by comparing to historical data.
D	The reported result is from a dilution.
E	The result is an estimate amount because the value exceeded the instrument calibration range.
J	The result is an estimated concentration that is less than the MRL but greater than or equal to the MDL.
N	The result is presumptive. The analyte was tentatively identified, but a confirmation analysis was not performed.
P	The GC or HPLC confirmation criteria was exceeded. The relative percent difference is greater than 40% between the two analytical results (25% for CLP Pesticides).
U	The compound was analyzed for, but was not detected ("Non-detect") at or above the MRL/MDL.
i	The MRL/MDL has been elevated due to a chromatographic interference.
X	See case narrative.

Additional Petroleum Hydrocarbon Specific Qualifiers

F	The chromatographic fingerprint of the sample matches the elution pattern of the calibration standard.
L	The chromatographic fingerprint of the sample resembles a petroleum product, but the elution pattern indicates the presence of a greater amount of lighter molecular weight constituents than the calibration standard.
H	The chromatographic fingerprint of the sample resembles a petroleum product, but the elution pattern indicates the presence of a greater amount of heavier molecular weight constituents than the calibration standard.
O	The chromatographic fingerprint of the sample resembles an oil, but does not match the calibration standard.
Y	The chromatographic fingerprint of the sample resembles a petroleum product eluting in approximately the correct carbon range, but the elution pattern does not match the calibration standard.
Z	The chromatographic fingerprint does not resemble a petroleum product.

COLUMBIA ANALYTICAL SERVICES, INC.

Analytical Results

Client:	Del Mar Analytical, Incorporated	**Service Request:**	K0505403
Project:	Arizona Drinking Water	**Date Collected:**	10/31/2005
Sample Matrix:	Drinking water	**Date Received:**	11/02/2005

Pesticides/PCBs by EPA method 508.1

Sample Name:	POJ0871-01	**Units:**	ug/L
Lab Code:	K0505403-001	**Basis:**	NA
Extraction Method:	METHOD	**Level:**	Low
Analysis Method:	508.1		

Analyte Name	Result	Q	MRL	Dilution Factor	Date Extracted	Date Analyzed	Arizona Qualifier
gamma-BHC (Lindane)	ND	U	0.0060	1	11/10/05	11/11/05	
Heptachlor	ND	U	0.0060	1	11/10/05	11/11/05	
Heptachlor Epoxide	ND	U	0.0060	1	11/10/05	11/11/05	
Endrin	ND	U	0.0060	1	11/10/05	11/11/05	
Methoxychlor	ND	U	0.0070	1	11/10/05	11/11/05	
Toxaphene	ND	U	0.10	1	11/10/05	11/11/05	
Chlordane	ND	U	0.10	1	11/10/05	11/11/05	
Aroclor 1016	ND	U	0.050	1	11/10/05	11/11/05	
Aroclor 1221	ND	U	0.10	1	11/10/05	11/11/05	
Aroclor 1232	ND	U	0.10	1	11/10/05	11/11/05	
Aroclor 1242	ND	U	0.10	1	11/10/05	11/11/05	
Aroclor 1248	ND	U	0.10	1	11/10/05	11/11/05	
Aroclor 1254	ND	U	0.10	1	11/10/05	11/11/05	
Aroclor 1260	ND	U	0.10	1	11/10/05	11/11/05	

Surrogate Name	%Rec	Control Limits	Date Analyzed	Arizona Qualifier
4,4'-Dibromooctafluorobiphenyl	85	70-130	11/11/05	

Comments:

COLUMBIA ANALYTICAL SERVICES, INC.

Analytical Results

Client: Del Mar Analytical, Incorporated
Project: Arizona Drinking Water
Sample Matrix: Drinking water

Service Request: K0505403
Date Collected: NA
Date Received: NA

Pesticides/PCBs by EPA method 508.1

Sample Name: Method Blank
Lab Code: KWG0519741-3

Extraction Method: METHOD
Analysis Method: 508.1

Units: ug/L
Basis: NA

Level: Low

Analyte Name	Result	Q	MRL	Dilution Factor	Date Extracted	Date Analyzed	Arizona Qualifier
gamma-BHC (Lindane)	ND	U	0.0060	1	11/10/05	11/11/05	
Heptachlor	ND	U	0.0060	1	11/10/05	11/11/05	
Heptachlor Epoxide	ND	U	0.0060	1	11/10/05	11/11/05	
Endrin	ND	U	0.0060	1	11/10/05	11/11/05	
Methoxychlor	ND	U	0.0070	1	11/10/05	11/11/05	
Toxaphene	ND	U	0.10	1	11/10/05	11/11/05	
Chlordane	ND	U	0.10	1	11/10/05	11/11/05	
Aroclor 1016	ND	U	0.050	1	11/10/05	11/11/05	
Aroclor 1221	ND	U	0.10	1	11/10/05	11/11/05	
Aroclor 1232	ND	U	0.10	1	11/10/05	11/11/05	
Aroclor 1242	ND	U	0.10	1	11/10/05	11/11/05	
Aroclor 1248	ND	U	0.10	1	11/10/05	11/11/05	
Aroclor 1254	ND	U	0.10	1	11/10/05	11/11/05	
Aroclor 1260	ND	U	0.10	1	11/10/05	11/11/05	

Surrogate Name	%Rec	Control Limits	Date Analyzed	Arizona Qualifier
4,4'-Dibromooctafluorobiphenyl	79	70-130	11/11/05	

Comments:

COLUMBIA ANALYTICAL SERVICES, INC.

QA/QC Report

Client: Del Mar Analytical, Incorporated
Project: Arizona Drinking Water
Sample Matrix: Drinking water

Service Request: K0505403

Surrogate Recovery Summary
Pesticides/PCBs by EPA method 508.1

Extraction Method: METHOD
Analysis Method: 508.1

Units: ug/L
Level: Low

Sample Name	Lab Code	Sur1
POJ0871-01	K0505403-001	85
Method Blank	KWG0519741-3	79
Batch QC	K0505357-001	79
POJ0871-01MS	KWG0519741-1	86
Batch QCMS	KWG0519741-4	80
Lab Control Sample	KWG0519741-2	82

Surrogate Recovery Control Limits (%)

Sur1 = 4,4'-Dibromooctafluorobiphenyl 70-130

Results flagged with an asterisk (*) indicate values outside control criteria.
Results flagged with a pound (#) indicate the control criteria is not applicable.

COLUMBIA ANALYTICAL SERVICES, INC.

QA/QC Report

Client: Del Mar Analytical, Incorporated
Project: Arizona Drinking Water
Sample Matrix: Drinking water

Service Request: K0505403
Date Extracted: 11/10/2005
Date Analyzed: 11/11/2005

Matrix Spike Summary
Pesticides/PCBs by EPA method 508.1

Sample Name: POJ0871-01
Lab Code: K0505403-001

Extraction Method: METHOD
Analysis Method: 508.1

Units: ug/L
Basis: NA

Level: Low
Extraction Lot: KWG0519741

POJ0871-01MS
KWG0519741-1
Matrix Spike

Analyte Name	Sample Result	Result	Expected	%Rec	%Rec Limits
gamma-BHC (Lindane)	ND	0.0922	0.0990	93	65-135
Heptachlor	ND	0.0885	0.0990	89	65-135
Heptachlor Epoxide	ND	0.0938	0.0990	95	65-135
Endrin	ND	0.110	0.0990	111	65-135
Methoxychlor	ND	0.117	0.0990	118	65-135

Results flagged with an asterisk (*) indicate values outside control criteria.
Results flagged with a pound (#) indicate the control criteria is not applicable.
Percent recoveries and relative percent differences (RPD) are determined by the software using values in the calculation which have not been rounded.

COLUMBIA ANALYTICAL SERVICES, INC.

QA/QC Report

Client: Del Mar Analytical, Incorporated
Project: Arizona Drinking Water
Sample Matrix: Drinking water

Service Request: K0505403
Date Extracted: 11/10/2005
Date Analyzed: 11/11/2005

Matrix Spike Summary
Pesticides/PCBs by EPA method 508.1

Sample Name: Batch QC
Lab Code: K0505357-001

Extraction Method: METHOD
Analysis Method: 508.1

Units: ug/L
Basis: NA

Level: Low
Extraction Lot: KWG0519741

Batch QCMS
KWG0519741-4
Matrix Spike

Analyte Name	Sample Result	Result	Expected	%Rec	%Rec Limits
Aroclor 1254	ND	0.515	0.500	103	65-135

Results flagged with an asterisk (*) indicate values outside control criteria.
Results flagged with a pound (#) indicate the control criteria is not applicable.
Percent recoveries and relative percent differences (RPD) are determined by the software using values in the calculation which have not been rounded.

COLUMBIA ANALYTICAL SERVICES, INC.

QA/QC Report

Client:	Del Mar Analytical, Incorporated	**Service Request:**	K0505403
Project:	Arizona Drinking Water	**Date Extracted:**	11/10/2005
Sample Matrix:	Drinking water	**Date Analyzed:**	11/11/2005

Lab Control Spike Summary
Pesticides/PCBs by EPA method 508.1

Extraction Method:	METHOD	**Units:**	ug/L
Analysis Method:	508.1	**Basis:**	NA
		Level:	Low
		Extraction Lot:	KWG0519741

	Lab Control Sample KWG0519741-2 Lab Control Spike			
Analyte Name	**Result**	**Expected**	**%Rec**	**%Rec Limits**
gamma-BHC (Lindane)	0.103	0.100	103	70-130
Heptachlor	0.0962	0.100	96	70-130
Heptachlor Epoxide	0.103	0.100	103	70-130
Endrin	0.119	0.100	119	70-130
Methoxychlor	0.124	0.100	124	70-130
Aroclor 1254	0.539	0.500	108	70-130

Results flagged with an asterisk (*) indicate values outside control criteria.

Percent recoveries and relative percent differences (RPD) are determined by the software using values in the calculation which have not been rounded.

Del Mar Analytical

17461 Derian Ave. Suite 100, Irvine, CA 92614 Ph (949) 261-1022 Fax (949) 261-1228
1014 E. Cooley Dr., Suite A, Colton, CA 92324 Ph (909) 370-4667 Fax (909) 370-1046
9484 Chesapeake Drive, Suite 805, San Diego, CA 92123 Ph (619) 505-9596 Fax (619) 505-9689
9830 South 51st Street, Suite B-120, Phoenix, AZ 85044 Ph (480) 785-0043 Fax (480) 785-0851
2520 E. Sunset Rd., Suite #3, Las Vegas, NV 89120 Ph (702) 798-3620 Fax (702) 798-3621

SUBCONTRACT ORDER - PROJECT # POJ0871

SENDING LABORATORY:

Del Mar Analytical - Phoenix
9830 South 51st Street, Suite B-120
Phoenix, AZ 85044
Phone: (480) 785-0043
Fax: (480) 785-0851
Project Manager: Ken Baker

RECEIVING LABORATORY:

Columbia Analytical Services - Kelso
1317 So. 13th Ave.
Kelso, WA 98626
Phone :(360) 577-7222
Fax: (360)

K0505403

Standard TAT is requested unless specific due date is requested => Due Date:_____ Initials:_____

Analysis	Expiration	Comments
Sample ID: POJ0871-01 Water	**Sampled: 10/31/05 10:00**	
508.1 AZ Regulated-C	11/07/05 10:00	columbia-kelso

Containers Supplied:
1 L NM Amber w/Na2SO3+HCL (POJ0871-01D)
1 L NM Amber w/Na2SO3+HCL (POJ0871-01E)

SAMPLE INTEGRITY:

All containers intact: ☐ Yes ☐ No Sample labels/COC agree: ☐ Yes ☐ No Samples Received On Ice:: ☐ Yes ☐ No
Custody Seals Present: ☐ Yes ☐ No Samples Preserved Properly: ☐ Yes ☐ No Samples Received at (temp): _____

Released By	Date	Time	Received By	Date	Time
	10/31/05	1700	Fed-Ex	10/31/05	1700
Released By	Date	Time	Received By	Date	Time
			CAS	11/2/05	0900

Columbia Analytical Services Inc.
Cooler Receipt and Preservation Form

PC Elissa

Project/Client DEL MAR Service Request K05 5403

Cooler received on 11/2/05 and opened on 11/2/05 by [signature]

1. Were custody seals on outside of coolers? TX Y (N)
   If yes, how many and where?
2. Were custody seals intact? Y N
3. Were signature and date present on the custody seals? Y N
4. Is the shipper's airbill available and filed? If no, record airbill number: (Y) N
5. COC#
   Temperature of cooler(s) upon receipt: (°C) 0.9
   Temperature Blank: (°C) N/D
   Were samples hand delivered on the same day as collection? Y N
6. Were custody papers properly filled out (ink, signed, etc.)? (Y) N
7. Type of packing material present ICE, BUBBLE WRAP
8. **Did all bottles arrive in good condition (unbroken)?** (Y) N
9. Were all bottle labels complete (i.e analysis, preservation, etc.)? (Y) N
10. Did all bottle labels and tags agree with custody papers? (Y) N
11. **Were the correct types of bottles used for the tests indicated?** (Y) N
12. Were all of the preserved bottles received at the lab with the appropriate pH? Y N
13. Were VOA vials checked for absence of air bubbles, and if present, noted below? Y N
14. Were the 1631 Mercury bottles checked for absence of air bubbles, and if present, noted below? Y N
15. Did the bottles originate from CAS/K or a branch laboratory? (Y) N
16. **Are CWA Microbiology samples received with >1/2 the 24hr. hold time remaining from collection?** Y N
17. Was C12/Res negative? Y N

Explain any discrepancies:

RESOLUTION:

Samples that required preservation or received out of temperature:

Sample ID	Reagent	Volume	Lot Number	Bottle Type	Rec'd out of Temperature	Initials

00007

Pace Analytical™

www.pacelabs.com

Report Prepared for:

Ken Baker
Del Mar Analytical
9830 South 51st Street
Phoenix AZ 85044

Report Information:

Pace Project #: 1022597
Sample Receipt Date: Nov 01, 2005
Client Project #:
Client Sub PO #:
State Certification: N/A

REPORT OF LABORATORY ANALYSIS FOR 2,3,7,8-TCDD

Report Summary:

This report contains results of one drinking water sample analyzed to determine 2,3,7,8-TCDD content. This sample was analyzed according to Method 1613 by High Resolution Gas Chromatography/High Resolution Mass Spectrometry.

Invoicing & Reporting Options:

The report provided has been invoiced as a Level 2 Drinking Water Report. If an upgrade of this report package is requested, an additional charge may be applied.

Please review the attached invoice for accuracy and forward any questions to Mr. Nate Habte, your Pace Project Manager.

Report Prepared Date:

November 15, 2005

This report has been reviewed and prepared by:

Mr. Natnael Habte, Project Manager
(612) 607-6407
(612) 607-6444 (fax)
Natnael.Habte@pacelabs.com

ACCREDITED IN ACCORDANCE WITH nelac

Report of Laboratory Analysis

This report should not be reproduced, except in full,
without the written consent of Pace Analytical Services, Inc.

Pace Analytical Services, Inc.
1700 Elm Street - Suite 200
Minneapolis, MN 55414

Tel: 612-607-1700
Fax: 612-607-6444

Drinking Water Analysis Results
2,3,7,8-TCDD -- USEPA Method 1613B

Sample ID.....POJ0871-01
Client.....Del Mar Analytical
Lab Sample ID.....1022597001

Date Collected.....10/31/2005
Date Received.....11/01/2005
Date Extracted.....11/10/2005

	Sample 1022597001	Method Blank	Lab Spike	Lab Spike Dup
[2,3,7,8-TCDD]	**ND**	ND	--	--
PRL	5 pg/L	5 pg/L	--	--
2,3,7,8-TCDD Recovery	--	--	76%	74%
Spike Recovery Limit	--	--	73-146%	73-146%
RPD			2.9%	
IS Recovery	**46%**	97%	85%	84%
IS Recovery Limits	31-137%	31-137%	25-141%	25-141%
CS Recovery	**43%**	85%	78%	72%
CS Recovery Limits	42-164%	42-164%	37-158%	37-158%
Filename	T51112C_16	T51112C_03	T51112C_01	T51112C_02
Analysis Date	11/13/2005	11/12/2005	11/12/2005	11/12/2005
Analysis Time	01:09	18:30	17:28	17:59
Analyst	BAL	BAL	BAL	BAL
Volume	0.859L	1.032L	1.028L	1.037L
Dilution	NA	NA	NA	NA
CCAL Filename	T51112B_01	T51112B_01	T51112B_01	T51112B_01

!	= Outside the Control Limits
ND	= Not Detected
PRL	= Pace Reporting Limit
Limits	= Control Limits from Method 1613 (10/94 Revision), Tables 6A and 7A
RPD	= Relative Percent Difference of Lab Spike Recoveries
IS	= Internal Standard [2,3,7,8-TCDD-$^{13}C_{12}$]
CS	= Cleanup Standard [2,3,7,8-TCDD-$^{37}Cl_4$]

Project No.....1022597

Del Mar Analytical

17461 Derian Ave. Suite 100, Irvine, CA 92614 Ph (949) 261-1022 Fax (949) 261-1228
1014 E. Cooley Dr., Suite A, Colton, CA 92324 Ph (909) 370-4667 Fax (909) 370-1046
9484 Chesapeake Drive, Suite 805, San Diego, CA 92123 Ph (619) 505-9596 Fax (619) 505-9689
9830 South 51st Street, Suite B-120, Phoenix, AZ 85044 Ph (480) 785-0043 Fax (480) 785-0851
2520 E. Sunset Rd., Suite #3, Las Vegas, NV 89120 Ph (702) 798-3620 Fax (702) 798-3621

SUBCONTRACT ORDER - PROJECT # POJ0871

1022597

SENDING LABORATORY:	RECEIVING LABORATORY:
Del Mar Analytical - Phoenix 9830 South 51st Street, Suite B-120 Phoenix, AZ 85044 Phone: (480) 785-0043 Fax: (480) 785-0851 Project Manager: Ken Baker	Pace Analytical 1700 Elm Street, Suite 200 Minneapolis, MN 55414 Phone :612-607-1700 Fax: 612-607-6444

Standard TAT is requested unless specific due date is requested => Due Date:_____ Initials:_____

Analysis	Expiration	Comments
Sample ID: POJ0871-01 Water	**Sampled: 10/31/05 10:00**	1022597001
Dioxin only (1613B)O	10/31/06 10:00	pace

Containers Supplied:
1 L Amber (POJ0871-01AA)
1 L Amber (POJ0871-01Z)

SAMPLE INTEGRITY:

All containers intact: ☒ Yes ☐ No Sample labels/COC agree: ☒ Yes ☐ No Samples Received On Ice:: ☒ Yes ☐ No
Custody Seals Present: ☒ Yes ☐ No Samples Preserved Properly: ☒ Yes ☐ No Samples Received at (temp): 3.8

Released By	Date	Time	Received By	Date	Time
	10/31/5	1700	Fed-Ex	10/31/5	2000
Released By	Date	Time	Received By	Date	Time
				11-1-05	9:15

Page 1 of 1

Sample Condition Upon Receipt

Pace Analytical

Client Name: DelMar Project # 1022597

Courier: ☒ Fed Ex ☐ UPS ☐ USPS ☐ Client ☐ Commercial ☐ Pace Other_____

Custody Seal on Cooler/Box Present: ☐ yes ☒ no Seals intact: ☐ yes ☐ no

Optional
Proj. Due Date:
Proj. Name:

Packing Material: ☐ Bubble Wrap ☒ Bubble Bags ☐ None ☐ Other_____

Thermometer Used 230194010 Type of Ice: (Wet) Blue None ☐ Samples on ice, cooling process has begun

Cooler Temperature 3.6 Biological Tissue is Frozen: Yes No

Temp should be above freezing to 6°C

Date and Initials of person examining contents: JT 11-1-05

Comments:

Chain of Custody Present:	☒Yes ☐No ☐N/A	1.
Chain of Custody Filled Out:	☒Yes ☐No ☐N/A	2.
Chain of Custody Relinquished:	☒Yes ☐No ☐N/A	3.
Sampler Name & Signature on COC:	☐Yes ☒No ☐N/A	4.
Samples Arrived within Hold Time:	☒Yes ☐No ☐N/A	5.
Short Hold Time Analysis (<72hr):	☐Yes ☒No ☐N/A	6.
Rush Turn Around Time Requested:	☐Yes ☒No ☐N/A	7.
Sufficient Volume:	☒Yes ☐No ☐N/A	8.
Correct Containers Used:	☒Yes ☐No ☐N/A	9.
-Pace Containers Used:	☐Yes ☒No ☐N/A	
Containers Intact:	☒Yes ☐No ☐N/A	10.
Filtered volume received for Dissolved tests	☐Yes ☒No ☐N/A	11.
Sample Labels match COC:	☒Yes ☐No ☐N/A	12.
-Includes date/time/ID/Analysis Matrix: WT		
All containers needing preservation have been checked.	☐Yes ☐No ☒N/A	13.
All containers needing preservation are found to be in compliance with EPA recommendation.	☐Yes ☐No ☒N/A	
exceptions: VOA, coliform, TOC, O&G, WI-DRO (water)	☐Yes ☐No	Initial when completed
Samples checked for dechlorination:	☐Yes ☒No ☐N/A	14.
Headspace in VOA Vials (>6mm):	☐Yes ☐No ☒N/A	15.
Trip Blank Present:	☐Yes ☐No ☒N/A	16.
Trip Blank Custody Seals Present	☐Yes ☐No ☒N/A	
Pace Trip Blank Lot # (if purchased):		

Client Notification/ Resolution: Field Data Required? Y / N

Person Contacted: _____ Date/Time: _____

Comments/ Resolution: _____

Project Manager Review: NAH **Date:** 11/5/05

Note: Whenever there is a discrepancy affecting North Carolina compliance samples, a copy of this form will be sent to the North Carolina DEHNR Certification Office (i.e out of hold, incorrect preservative, out of temp, incorrect containers)

ALLC003rev.2, 10June2005

Radiation Safety Engineering, Inc.
3245 N. WASHINGTON ST. · CHANDLER, ARIZONA 85225-1121
Website: www.radsafe.com
(480) 897-9459
FAX (480) 892-5446

Radiochemical Activity in Water (pCi/L)

Del Mar Analytical
9830 South 51st Street
Suite B-120
Phoenix, AZ 85044

Sample Received: November 1, 2005
Analysis Completed: November 7, 2005

Sample ID	Gross Alpha Activity Method 600/00-02 (pCi/L)	Gross Beta Activity Method 900.0 (pCi/L)
POJ0871-01	2.4 ± 0.8	2.0 ± 0.4

Robert L. Metzger, Ph.D., C.H.P.

Del Mar Analytical

17461 Derian Ave. Suite 100, Irvine, CA 92614 Ph.(949) 261-1022 Fax (949) 261-1228
1014 E. Cooley Dr., Suite A, Colton, CA 92324 Ph. (909) 370-4667 Fax (909) 370-1046
5464 Chesapeake Drive, Suite 505, San Diego, CA 92123 Ph.(619) 505-9596 Fax (619) 505-9689
9830 South 51st Street, Suite B-120, Phoenix, AZ 85044 Ph.(480) 785-0043 Fax (480) 785-0851
2520 E. Sunset Rd., Suite #3, Las Vegas, NV 89120 Ph.(702) 798-3620 Fax (702) 798-3621

SUBCONTRACT ORDER - PROJECT # POJ0871

SENDING LABORATORY:	RECEIVING LABORATORY:
Del Mar Analytical - Phoenix 9830 South 51st Street, Suite B-120 Phoenix, AZ 85044 Phone: (480) 785-0043 Fax: (480) 785-0851 Project Manager: Ken Baker	Radiation Safety Engineering, Inc. 3245 N. Washington St. Chandler, AZ 85225-1121 Phone :(480) 897-9459 Fax: 480-892-5446

Standard TAT is requested unless specific due date is requested => Due Date:_____ Initials:_____

Analysis	Expiration	Comments
Sample ID: POJ0871-01 Water Sampled: 10/31/05 10:00		
Gross Alpha-O	10/31/06 10:00	out
Gross Beta-O	10/31/06 10:00	out

25911

Containers Supplied:
1 Liter Poly (POJ0871-01AC)
1 Liter Poly (POJ0871-01AD)
1 Liter Poly (POJ0871-01AE)

SAMPLE INTEGRITY:

All containers intact: ☐ Yes ☐ No Sample labels/COC agree: ☐ Yes ☒ No Samples Received On Ice:: ☒ Yes ☐ No
Custody Seals Present: ☐ Yes ☐ No Samples Preserved Properly: ☒ Yes ☐ No Samples Received at (temp): _____

Released By	Date	Time	Received By	Date	Time
	11-1-05	0940	RW Johnson	11-1-05	0940
RW Johnson	11-1-05	1103	[illegible]	11-1-05	1105

17461 Derian Ave., #100, Irvine, CA 92614 (949) 261-10[illegible] X (949) 260-3299
1014 E. Cooley Dr., Suite A, Colton, CA 92324 (909) 370-46[illegible] X (909) 370-1046
9830 South 51st St., Suite B-12D, Phoenix, AZ 85044 (480) 785-0043 FAX (480) 785-0851
2520 E. Sunset Rd. #3, Las Vegas, NV 89120 (702) 796-3620 FAX (702) 798-3628

Del Mar Analytical

A TEST AMERICA COMPANY

CHAIN OF CUSTODY FORM

Page 1 of 1

Client Name/Address: HydroSystems Inc. 1220 S. Park Ln #5 Tempe AZ 85281

Project/PO Number: 05-400

Project Manager: Phil Paski

Phone Number: 480-517-9050

Sampler: Miles McGinnis

Fax Number: 480-517-9049

Analysis Required

Sample Description	Sample Matrix	Container Type	# of Cont.	Sampling Date	Sampling Time	Preservatives	MTBE 8021B	Trip Blank	Special Instructions
35100-206887-NS	GW	Vial	32	10/31	1000h	Var	X		PO TO 5711-01
TB			2					X	-2

Relinquished By: Date/Time: 10/31/05 1320

Received By: Date/Time:

Relinquished By: Date/Time:

Received By: Date/Time: 10/31/05

Relinquished By: Date/Time:

Received in Lab By: Date/Time: 10/31/5 1320

Turnaround Time: (Check)
same day ____ 72 hours ____
24 hours ____ 5 days ____
48 hours ____ normal X

Sample Integrity: (Check)
intact ✓ on ice ✓ 0.1°

Note: By relinquishing samples to Del Mar Analytical, client agrees to pay for the services requested on this chain of custody form and any additional analyses performed on this project. Payment for services is due within 30 days from the date of invoice. Sample(s) will be disposed of after 30 days.

Christopher J. Eastoe
Staff Scientist
520-621-1638 (office)
520-621-2672 (fax)
eastoe@geo.arizona.edu (e-mail)

THE UNIVERSITY OF
ARIZONA
TUCSON ARIZONA

Laboratory of Isotope Geochemistry
Department of Geosciences
Gould-Simpson Building
Tucson AZ 85721-0077
USA

December 16, 2005

Hydrosystems Inc.
Attn: Sheila Ehlers
1220 S Park Lane, Suite 5
Tempe AZ 85281

REPORT OF ANALYSES

1 water sample for tritium

Sample	AT	Tritium, TU
05400-206887-NS	2914	<0.7
Detection Limit (1500 minute count, 9 x enrichment)		0.6

C.J.Eastoe
Staff Scientist

Ms. Sheila Ehlers
Hydrosystems Inc.
1220 S Park Lane, Suite 5
Tempe AZ 85281

REPORT OF ANALYSES
water samples for H and O isotopes

W	Sample	δ18O ‰	δD ‰
27367	05400-206887-NS	-11.9	-84
Analytical precision (1σ)		0.08	0.9

C.J.Eastoe
Staff Scientist

K

Appendix K

Digital Model Files

OVERSIZED DOCUMENT

DOCKET NO. WS-04235A-05-0707

APPENDIX K
DIGITAL MODEL FILES

UTILITY SOURCE, LLC
PAD MODEL

FOR VIEWING PLEASE SEE

DOCKET CONTOL