ORIGINAL

0000007776

Jana Van Ness
Manager
Regulatory Compliance

Tel 602/250-2310
Fax 602/250-3399
e-mail:jvanness@apsc.com
http://www.apsc.com

Mail Station 9905
P.O. Box 53999
Phoenix, AZ 85072-3999

RECEIVED
2003 JAN 31 P 3:58
AZ CORP COMMISSION
DOCUMENT CONTROL

January 31, 2003

Mr. Ernest Johnson
Director, Utilities Division
Arizona Corporation Commission
1200 West Washington
Phoenix, Arizona 85007

RE: DOCKET NO. E-00000D-03-0047 A.R.S. 40-360.02
ARIZONA PUBLIC SERVICE COMPANY'S TEN-YEAR PLAN

Dear Mr. Johnson:

Pursuant to the Arizona Revised Statutes, Section 40-360.02 relating to transmission line siting requirements, attached is Arizona Public Service Company's Ten-Year Plan for the period of 2003 through 2012, for construction of new electric facilities. In addition, pursuant to Decision No. 65154, Arizona Public Service Company is also filing their Reliability Must-Run Generation study report in concert with their January 31 Ten-Year Plan.

If you have any questions regarding this filing, please call me at (602)250-2310.

Sincerely,

Jana Van Ness

Jana Van Ness
Manager
Regulatory Compliance

Arizona Corporation Commission
DOCKETED
JAN 31 2003
DOCKETED BY

Attachment

JVN/vld

Cc: Patrick Williams, ACC
Manager, Compliance & Enforcement w/o attachment

Docket Control, Original plus 13 copies

Reliability Must-Run Analysis

2003–2005

January 31, 2003
APS Transmission Planning
APS Resource Planning

Reliability Must-Run Analysis

2003–2005

January 31, 2003
APS Transmission Planning
APS Resource Planning

TABLE OF CONTENTS

PAGE

List of Tables 3
List of Figures 4
I. Executive Summary 5
A. Study Overview 5
B. Summary of Results 6
C. Report Conclusions 9
D. Report Organization 12
II. Introduction 13
A. Background of Study Requirement 13
B. Overview of RMR 13
C. Study Methodology 14
D. Determination of SIL and RMR Conditions 15
III. Phoenix Load Pocket 16
A. Description of Phoenix Area 16
B. Phoenix-Area Critical Outages 18
C. Phoenix Area – SIL for 2003, 2004 and 2005 19
D. Generation Sensitivities 21
IV. Yuma Area 22
A. Description of Yuma Area 22
B. Yuma Area Critical Outages 23
C. Yuma Area - SIL for 2003, 2004 and 2005 23
D. Generation Sensitivities 25
V. Analysis of RMR Conditions 26
A. Phoenix Area 26
1. Annual RMR Conditions 26
2. Maximum Load Serving Capability (MLSC) 27
3. Area Load Forecast 29
4. Generation 30
5. Reserves 32
B. Yuma Area 32
1. Annual RMR Conditions 32
2. Maximum Load Serving Capability (MLSC) 34
3. Area Load Forecast 34
4. Generation 35
5. Reserves 35

VI. Economic Analysis of RMR 36
A. Introduction 36
B. Phoenix 37
1. Phoenix Imports 37
2. Operation of Phoenix-Area Generating Units 38
3. Cost Impacts 39
4. Emissions Impact 39
C. Yuma 41
1. Yuma Imports 41
2. Operation of Yuma Units 41
3. Cost Impacts 42
4. Emission Impacts 42
VII. Transmission Alternatives to Mitigate RMR 44
A. Phoenix Area 44
B. Yuma Area 44
VIII. Conclusions 46

Appendices

A. Power Flow Output Results ..... A1 – A162
B. Multi-Area Production Simulation Program Description ..... B1 – B26
C. Phoenix Imports ..... C1 – C11
D. Yuma Imports ..... D1 – D6

LIST OF TABLES

Page

ES1. Phoenix-Area RMR Effects and Costs for APS Load....6
ES2. Yuma RMR Effects and Costs for APS Load....7
ES3. Phoenix-Area Non-APS RMR Requirements for APS Load....8
ES4. Yuma-Area Non-APS RMR Requirements for APS Load....8
ES5. Phoenix-Area RMR Outside Economic Dispatch....9
ES6. Yuma-Area RMR Outside Economic Dispatch....9
ES7. Phoenix-Area Air Emissions Reduction....10
ES8. Yuma-Area Air Emissions Reduction....11
1. 2003-2005 Phoenix-Area Simultaneous Import Limit....19
2. Generation Sensitivities Inside Phoenix....21
3. Generation Sensitivities Outside Phoenix....21
4. Yuma Projects....25
5. Phoenix RMR Conditions Without Phoenix-Area Generation....26
6. A. Non-APS/UDC Must-Run Generation to Meet APS Phoenix Load (APS)....28
B. Non-APS/UDC Must-Run Generation to Meet APS Phoenix Load (Total Phx)....29
7. Phoenix and Yuma Load and Energy....30
8. Phoenix-Area Generation....31
9. Yuma RMR Conditions Without Generation....33
10. Non-APS Must Run Generation to Meet Yuma Load....34
11. Yuma-Area Generation....35
12. Impact of Eliminating Phoenix Import Limits....38
13. Phoenix Historical Capacity Factor....39
14. Phoenix-Area Air Emissions Reduction....40
15. Phoenix Power Plant Emissions....40
16. Impact of Eliminating Yuma Import Limits....41
17. Yuma Plants (Historical Generation)....42
18. Yuma Power Plant Emissions....43
C1. Phoenix-Area Air Emissions Reduction....47
C2. Yuma-Area Air Emissions Reduction....48

LIST OF FIGURES

Page

1. Phoenix-Area Extra High Voltage Delivery Points.....17
2. Phoenix-Area 2003 System Import Limit.....19
3. Phoenix-Area 2004 System Import Limit.....20
4. Phoenix-Area 2005 System Import Limit.....20
5. Yuma District Transmission System.....22
6. 2003 Yuma-Area Simultaneous Import Limit.....23
7. 2004 Yuma-Area Simultaneous Import Limit.....24
8. 2005 Yuma-Area Simultaneous Import Limit.....24
9. 2003 APS (Phoenix) Load Duration & RMR Condition.....27
10. 2003 Yuma Load Duration & RMR Condition.....33
11. 2005 Yuma-Area Load Serving Capability.....45

APS Reliability Must-Run Analysis 2003-2005

I. EXECUTIVE SUMMARY

This report documents the study methodology, results, and conclusions of Arizona Public Service Company's (APS) Reliability Must-Run (RMR) Analysis for 2003 through 2005. This analysis was conducted in response to the Arizona Corporation Commission's (ACC) Second Biennial Transmission Assessment (Assessment) and Decision No. 65476 (December 19, 2002). As required by the Assessment, the 2003 RMR Analysis covers three years. The 2004 RMR Analysis will cover 10 years.

If a city or load pocket must be served by local generating units at certain peak times, then those units are designated as "reliability must-run" or RMR units. In APS' service territory there are two major areas where load cannot be served totally by power imported over transmission lines – the Phoenix metropolitan area and Yuma. The cost of using must-run units can be measured by the difference between generation costs with the transmission limit and costs without the limit. This report looks at and compares the cost of serving these two areas with and without the existing transmission constraints.

This report concludes that for the Phoenix metropolitan area, the cost of RMR with the transmission limit does not at present outweigh the cost of transmission improvements to remove the limitation. For Yuma, the report shows that the addition of a 500/69 kV transformer at the North Gila substation could be a cost-effective measure to improve transmission import capacity. Environmental effects for both areas with and without transmission constraints are also documented in this report.

A. Study Overview

The existence of transmission import limited areas is not uncommon in the United States, and particularly in the West where load centers are generally separated by long distances. APS has transmission import-limited areas in Phoenix and Yuma. An import area is transmission limited when all load cannot be served solely by importing resources over local transmission lines, thus requiring some use of local generating units to reliably meet peak load.

The two transmission import-limited areas in APS' system were studied to determine:

- The system simultaneous import limit (SIL), which is the maximum amount of capacity that can be reliably imported into an area with no local generation;
- The maximum load serving capability (MLSC), which is the total load that can be reliably served from imports and from local generation;
- Annual RMR conditions, including magnitude of load in excess of the SIL and number of hours the load exceeds the SIL; and
- Estimated economic impacts of the import limits.

Additionally, transmission alternatives were studied to compare the costs of mitigating the annual RMR conditions with the potential benefits of such mitigation.

The Phoenix area is a tight network of APS and Salt River Project (SRP) load, resources, and transmission facilities. Because the Phoenix system is highly integrated, the import limits must be determined for the combined area. This analysis was coordinated with SRP personnel, who had significant involvement in the study and were helpful in the overall analysis. The Western Area Power Administration (WAPA) participated in the study because their transmission facilities interface with the Phoenix network and also provided helpful comments.

After the combined import limit (SIL) for the Phoenix area was determined, RMR conditions were evaluated for APS based on APS' share of the combined import limits, APS' Phoenix-area load, and Phoenix area local generation, which includes generation owned by APS, SRP and Pinnacle West Energy Corporation (PWEC).

The Yuma area, which has a summer peak demand of approximately 300 MW, is served by an internal APS 69-kV sub-transmission network containing all of the load in the import-limited area. There are external ties to WAPA and the Imperial Irrigation District (IID), as well as a bulk power interface with the Palo Verde-to-North Gila transmission system. This analysis was coordinated with the WAPA Phoenix office to ensure accurate modeling.

B. Summary of Results

Results of the analysis for the three years of the study, which are summarized in the following tables, assume that present plans for system improvements are completed on schedule.

The following table summarizes the estimated RMR effects and costs for APS load in the Phoenix area.

Table ES1
Phoenix-Area RMR Effects and Costs for APS Load

Year	SIL[1] (MW)	Peak Demand (MW)	Max RMR[2] (MW)	RMR[3] Hours	RMR Energy[4] (GWH)	RMR Energy (% of total)	RMR Cost[5] ($M)
2003	3621	4456	835	518	170	0.9	0.03
2004	3658	4614	956	590	211	1.0	0.4
2005	3709	4733	1024	656	243	1.1	0.7

The following table summarizes the estimated RMR effects and costs for load in the Yuma area.

Table ES2
Yuma Area RMR Effects and Costs for APS Load

Year	SIL[1] (MW)	Peak Demand (MW)	Max RMR[2] (MW)	RMR[3] Hours	RMR Energy[4] (GWH)	RMR Energy (% of total)	RMR Cost[5] ($M)
2003	164	308	144	3184	143	10.2	1.5
2004	164	312	148	3512	162	11.3	1.3
2005	164	324	160	3834	186	12.4	1.5

Table Key:

[1]**SIL** – System Simultaneous Import Limit is the maximum amount of capacity that can be reliably imported into the area with no local generation operating.

[2]**Max RMR** – The amount of local generation required to meet the area peak demand (Peak Demand minus SIL).

[3]**RMR Hours** – The number of hours that the area's demand exceeds the SIL, thus requiring the use of local generation to meet load.

[4]**RMR Energy** – The annual energy required to be met by local generation (in excess of the SIL).

[5]**RMR Cost** – The difference in annual generation cost with and without the transmission limitation.

In addition to APS local generation, there are SRP, PWEC or other resources that can be used to meet the RMR requirement. The RMR requirements for non-APS generation are determined by including the APS local generation minus local reserve requirements with the SIL and subtracting that number from the estimated peak demand.

The table on the following page summarizes the estimated non-APS RMR requirements for APS load in the Phoenix area.

Table ES3

Phoenix-Area Non-APS RMR Requirements for APS Load

Year	SIL plus APS Local Generation[1]	Peak Demand (MW)	Non-APS Max RMR (MW)	Non-APS RMR HOURS	Non-APS RMR Energy (GWH)
2003	4091	4456	365	152	23
2004	4128	4614	486	200	42
2005	4179	4733	554	230	55

The following table summarizes the estimated non-APS RMR requirements for load in the Yuma area.

Table ES4
Yuma Area Non-APS RMR Requirements for APS Load

Year	SIL plus APS Local Generation[1]	Peak Demand (MW)	Non-APS Max RMR (MW)	Non-APS RMR HOURS	Non-APS RMR Energy (GWH)
2003	233	308	75	836	21
2004	233	312	79	962	27
2005	233	324	91	1104	34

[1]SIL plus APS local generation minus reserve requirement (190 MW for Phoenix, 70 MW for Yuma)

Local generating units are dispatched based on cost, along with the rest of APS' resources. Thus, most of the RMR hours shown above are "in the money" when dispatched. However, the presence of a transmission constraint may require local generation to be dispatched "out of the money." This report considered all Phoenix-area transmission limitations and generation resources in determining the overall RMR situation. The economic impact of RMR can be seen from the following tables.

The following table summarizes the estimated total number of hours that APS local Phoenix generation must run out of economic dispatch, the amount of energy that is produced out of economic dispatch and the associated cost.

Table ES5
APS Phoenix-Area RMR Outside Economic Dispatch

Year	Hours outside economic dispatch	Energy outside economic dispatch (GWH)	RMR Cost ($M)
2003	32	7	0.03
2004	146	43	0.4
2005	174	44	0.7

The following table summarizes the estimated total number of hours that APS local Yuma generation must run out of economic dispatch, the amount of energy that is produced out of economic loading and the associated cost.

Table ES6
APS Yuma Area RMR Outside Economic Dispatch

Year	Hours outside economic dispatch	Energy outside economic dispatch (GWH)	RMR Cost ($M)
2003	1066	54	1.5
2004	974	49	1.3
2005	1196	56	1.5

C. Report Conclusions

Phoenix-Area Conclusions

1. During the summer, APS Phoenix-area load is expected to exceed the available transmission import capability for approximately 500 hours in 2003 and 650 hours in 2005. However, these hours represent only one percent of the annual energy requirements for APS' Phoenix area.

2. From a total Phoenix load, transmission, and resources viewpoint (APS, SRP, and PWEC), import limits are expected to cause APS local generation to be dispatched out of economic dispatch order for 32 hours in 2003, 146 hours in 2004, and 174 hours in 2005.

3. The estimated annual economic cost of Phoenix-area generation required to run out of economic dispatch order is estimated to be $720,000 in 2005, compared to a cost of approximately $16 million to relieve 452 MW of the Phoenix area's transmission constraint. Thus, the transmission alternative currently is not cost justified.

4. All Phoenix-area transmission and local generation are necessary to reliably serve all Phoenix-area peak load.

5. In capacity terms, APS will require from 365 MW in 2003 to 554 MW in 2005 of non-APS resources within the Phoenix area to serve the APS Phoenix-area load. These resources could be supplied from non-APS local generation (including PWEC West Phoenix Units 4 and 5, SRP Phoenix-area generation, or newly constructed local generation) or from remote generation delivered to APS using SRP Phoenix-area import capability.

6. Non-APS generation outside of the Phoenix load area (or inside the Phoenix load area when serving load outside) has the following impact on Phoenix-area import capability, measured as a percent of additional MW of import capability to MW of output:

   West Phoenix Units 4 and 5.....134%

   Sundance..... 35%

   Desert Basin..... 24%

   Hassayampa Area..... 0%

   Panda Gila River..... 0%

7. Removing the transmission constraint would reduce total Phoenix-area air emissions by the following average annual amounts over the 2003-2005 period.

Table ES7
Phoenix-Area Air Emissions Reduction

Pollutant	Avg. Reduction (tons/year)	Reduction of Phoenix Area Emissions (% of total emissions from all sources)
VOC	1.0	0.001
NO_x	29.5	0.049
CO	5.5	0.002
PM_{10}	1.8	0.002

8. Removing the import restriction into the Phoenix area reduces the APS local generation capacity factor from 1.4% to 0.9%.

Yuma Area Conclusions

9. The Yuma-area load is expected to exceed the available transmission import capability for approximately 3,200 hours in 2003 and 3,800 hours in 2005, although the amount of total load in the Yuma area is only approximately 300 MW.

10. From a total Yuma load, transmission, and resources viewpoint (APS, IID, and YCA), the import constraint could cause APS Yuma generation to be dispatched out of economic dispatch order for approximately 1,070 hours in 2003, 975 hours in 2004, and 1,200 hours in 2005.

11. The addition of a second 500/69 kV transformer at the North Gila station in the Yuma area will be further studied. Preliminary analysis shows that installation of this transformer significantly reduces Yuma-area RMR. Preliminary study results show potential savings in energy costs from removing the constraint of approximately $1.4 million per year for the years 2003 through 2005. The cost to install a second 500/69kV transformer is estimated to be $3.5 million.

12. All existing Yuma-area transmission and generation resources are necessary to reliably serve the Yuma-area load.

13. In capacity terms, APS will require from 75 MW in 2003 to 91 MW in 2005 of non-APS resources in the Yuma area to serve the APS Yuma-area load. These resources may be supplied from the 75 MW IID steam generator at the Yucca substation, the 53 MW YCA co-generator near the Riverside substation, or future generation/transmission construction in the Yuma area.

14. Removing the transmission constraint could reduce total Yuma-area air emissions by the following average annual amounts for the period 2003-2005.

Table ES8
Yuma Area Air Emissions Reduction

Pollutant	Avg. Reduction (tons/year)	Reduction of Yuma Area Emissions (% of total emissions from all sources)
VOC	9.5	Unavailable
NO_x	154	Unavailable
CO	33	Unavailable
PM_{10}	6.5	0.003

15. Removing the import restriction into the Yuma area could reduce the APS Yuma generation capacity factor from 4.4 percent to 0.1 percent.

D. Report Organization

This report is organized in eight sections. Section I provides an executive summary of the report. Section II provides general background information of the study requirements, an overview of RMR, and describes the study methodology. Section III describes the Phoenix area, the nature of the import limit, the resulting import limits for 2003 through 2005, and the impact of various generators in and around the Phoenix area on the import limit. Section IV provides a similar discussion of the Yuma area. Section V describes the RMR conditions such as number of hours, maximum capacity, and annual energy for the Phoenix and Yuma areas. Section VI provides results of the economic analysis of the Phoenix and Yuma area RMR conditions performed utilizing a regional planning model (GE MAPS) and emissions impact. Section VII identifies and analyzes preliminary transmission alternatives to mitigate the import limits of the Phoenix and Yuma areas. Finally, Section VIII lists the conclusions of the analysis.

II. INTRODUCTION

A. Background of Study Requirement

Like all large electric utilities, APS has historically relied on both transmission to deliver remote generation into its load centers as well as local generation to reliably serve its customers. Generation located close to load results in reduced losses, lower capital expenses for transmission infrastructure, and enhanced reliability and operating flexibility. However, due in part to environmental, economic, and fuel availability considerations, large base-load thermal generators have typically been located away from the load centers while smaller but less efficient intermediate and peaking units — with lower capacity factors — were located within the load centers.

In the past, vertically integrated utilities such as APS managed the siting and construction of both generation and transmission resources needed to serve their customers. Electric systems were designed based on a detailed integrated resource planning process used to evaluate the appropriate balance of generation, transmission and demand-side resources. Interconnections with neighboring systems were primarily intended to improve system reliability and lower the costs of reserves, by allowing for sharing of capacity reserves by multiple systems. Each utility's system was primarily designed to accommodate that utility's resources and that utility's load.

The Commission's Second Biennial Transmission Assessment requires "any [Utility Distribution Company] that currently relies on local generation, or foresees a future time period when utilization of local generation may be required to assure reliable service for a local area, [to] perform and report the findings of an RMR study as a feature of their ten year plan filing with the Commission in January 2003 and 2004." The Assessment requires that the RMR study filed in January 2003 evaluate RMR conditions through the 2005 summer peak. The January 2004 RMR study will cover a 10-year period.

B. Overview of RMR

Local "load pockets" are areas that do not have enough transmission import capability to serve all load in the area solely by importing remote generation over local transmission facilities. For these areas, during peak hours of the year, local generation is required to serve that portion of the load that cannot reliably be served by transmission imports. This local generation requirement is often referred to as Reliability Must-Run or RMR generation. In these areas, during peak conditions, load is served by a combination of importing remote generation over transmission lines and operating local generation.

The maximum load that can be served in a load pockets with no local generation operating — in other words, the maximum load that can be served solely by importing remote generation — is referred to as the system Simultaneous Import Limit (SIL). The SIL is established through technical studies by ensuring that:

- With the local load at the SIL and no local generation operating there are no transmission system normal operating limit violations of thermal loading or voltages (N-0), and
- Under all single contingency outage events there are no emergency operating limit violations of thermal loading or voltages, and no system instability (N-1).

C. Study Methodology

Import limit analysis was performed for the Phoenix and Yuma areas. See Appendix A for power flow results. The import limit area or load pocket is defined as that load which, when increased, would increase the severity of the limiting contingency. For example, load in Flagstaff has no impact on the severity of the limiting contingency for the Phoenix import limited area, and therefore Flagstaff is not included in the Phoenix load pocket. In contrast, downtown Phoenix load does impact the severity of the limiting contingency and therefore is included in the load pocket. All area contingencies known to result in system stress were evaluated to determine the critical contingency for the area. Import limits were determined by contingency conditions of thermal loading at the emergency rating of a facility, steady state voltages at the emergency voltage limit, and system instability including voltage instability.

Import limits were determined for the Phoenix and Yuma areas with no local generation operating, with maximum local generation operating, and sufficient points in between to determine curves which define import limits at all load levels. This methodology was applied to studies of the Phoenix area, which is constrained by voltage instability. For the Yuma studies, the limitations are primarily post-disturbance thermal constraints. Generator sensitivities were performed to determine the relative impact of various generators on the import limits.

From each year's forecasted peak load and historical daily load cycles, the annual RMR conditions were determined including magnitude of local load, both demand and energy, expected to exceed the SIL and the annual hours for which local load is expected to exceed the SIL.

An economic analysis was performed in each area for each year using the GE MAPS production-costing model to determine the cost of the import limits. Local generating units not owned by APS were modeled based on unit commitment and economic dispatch principles while observing any known operating and contractual constraints. GE MAPS is a regional generation and transmission simulation model and is discussed in more detail in Appendix B to this report.

Several transmission alternatives to relying on local generation to meet all loads in excess of the area SIL were identified and then studied with the GE MAPS model to determine impact on SIL and other RMR conditions. The production cost analysis was then repeated to determine the value of these transmission alternatives in mitigating the RMR conditions.

D. Determination of SIL and RMR Conditions

In this analysis, assessments of the SIL and RMR conditions for the Phoenix area and the Yuma area were performed for the years 2003, 2004 and 2005. Base case and contingency power flow, stability, and voltage stability analyses were performed to determine import limitations. The initial starting case was based on a 2002 WECC full loop base case in GE Power Flow format. This base case models the entire Western Interconnection's transmission system and was reviewed and then updated to represent expected loads and system configuration for 2003, 2004 and 2005. All cases were coordinated between APS, SRP, Tucson Electric Power Company (TEP), and WAPA to capture the most accurate expected operating conditions for the Arizona transmission system.

III. PHOENIX LOAD POCKET

A. Description of Phoenix Area

By summer 2003, the Phoenix area — which consists of both APS' and SRP's integrated network — will be served primarily from four major Extra High Voltage (EHV) substations: Westwing, Pinnacle Peak, Kyrene and the new Rudd substation. These four EHV stations form the "cornerstones" of an extensive internal network of 230 kV transmission lines that constitute the high voltage energy delivery system within the Phoenix load area. Figure 1 shows the major EHV delivery points and the 230 kV transmission lines and transformers that are used to determine the Phoenix-area load. Energy flows into the EHV delivery points from the EHV transmission lines and then is stepped down to 230 kV and transmitted into the load center via the 230 kV transmission lines. The Phoenix-area load is determined by the flows on these 230 kV lines and 230/69 kV transformers out of the EHV delivery substations and into the Phoenix load area. This is the load that significantly impacts the severity of the limiting contingencies because, for outages of EHV sources to the EHV delivery points and for outages of the 230 kV lines into the load center, the energy flow is transferred to other EHV lines to the EHV delivery points, or to other 230 kV lines into the load center.

In the summer of 2003, APS will serve some northwest Phoenix-area load from the Raceway substation, which has been built as an interconnection to the WAPA Westwing-to-Waddell 230 kV line. Because this line has no interconnections with other Phoenix area 230 kV lines, this load does not significantly impact the contingency response of the Phoenix area and is therefore not included in the Phoenix-area load determination. Likewise, in 2004 APS will interconnect the Gavilan Peak substation into WAPA's Pinnacle Peak-to-Prescott 230 kV line and load served from this substation is not included in the Phoenix-area load determination.

SRP and the City of Mesa (which serves approximately 80 MW of load in downtown Mesa out of a total Phoenix-area load of approximately 10,000 MW) share the 230 kV and 69 kV buses at the Rogers substation. The Rogers substation is interconnected at 230 kV with two WAPA transmission lines. SRP subtracts the City of Mesa load from the Phoenix-area load calculation but does not attribute any RMR generation responsibility to the City of Mesa. APS and SRP will reassess the treatment of the City of Mesa load and other area loads in the Phoenix-area load calculation for future years as part of the next RMR analysis due January 2004.

WAPA owns and operates several 230 kV transmission lines that encircle the Phoenix-area network. These lines add support and contribute to the total Phoenix-area import capability — as do all of the other lines in the Arizona transmission system. As shown in Figure 1, however, with the exception of Mesa there is no load directly served from these WAPA transmission lines. Thus, if the WAPA transmission lines were included in the Phoenix-area load calculation, the only additional load and import would be the losses on these lines. Because nothing would change in the model, the analysis and results would not change and the additional load from the losses would be exactly offset by an increase in import equal to the losses. Therefore, including or excluding the WAPA transmission lines in the Phoenix area does not affect either the SIL or MLSC.

Phoenix Area Load

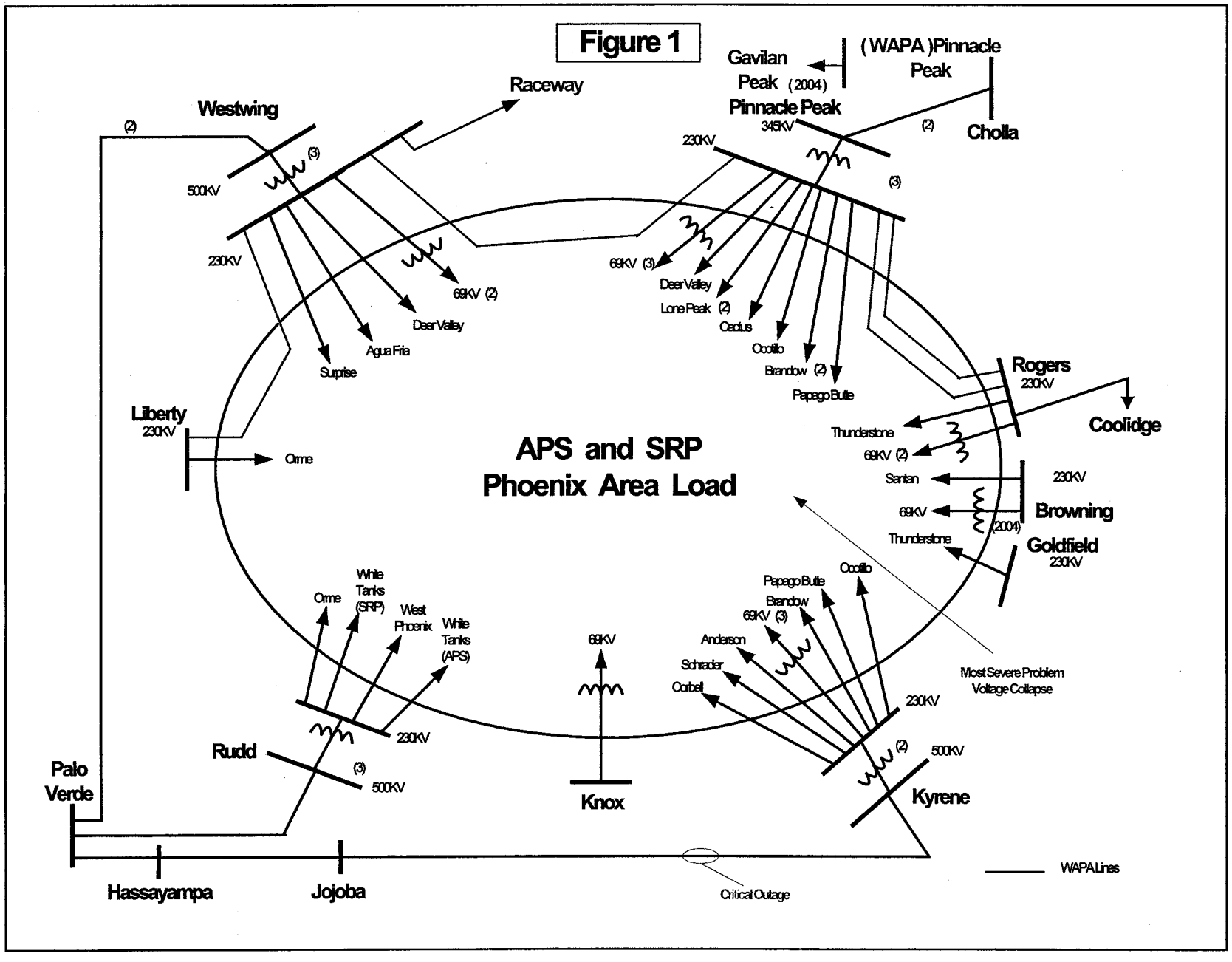

In performing the Phoenix area studies several planned projects were added to reflect transmission system upgrades for the next three years:

2003 Projects

- Four Corners-Shiprock 230 kV line converted to 345 kV
- White Tanks 2nd 230/69 kV, 280 MVA transformer addition
- Rudd 500 kV substation and three 500/230 kV transformers
- Palo Verde-Rudd 500 kV line
- Rudd 230 kV substation
- West Phoenix-White Tanks 230 kV and Orme-White Tanks 230 kV lines looped-in to Rudd 230 kV substation
- West Phoenix CC#5 525 MW generation addition
- Re-conductor West Phoenix-Lincoln Street 230 kV line

2004 Projects

- Gavilan Peak substation connected to Pinnacle Peak-Prescott 230 kV line
- Reach 2nd 230/69 kV transformer addition
- Browning 230/69 kV, 280 MVA transformer addition

2005 Projects

- Cactus 3rd 230/69 kV transformer addition
- Surprise 2nd 230/69 kV transformer addition
- West Phoenix 3rd 230/69 kV transformer addition
- Thunderstone 2 new 230/69 kV, 280 MVA transformers addition
- Alexander 69 kV 46mvar capacitors addition
- Santan 825 MW generation addition

B. Phoenix Area Critical Outages

The analysis determined that the critical single contingency for the Phoenix load area is the loss of the Jojoba-to-Kyrene 500kV transmission line. The loss of this major 500 kV line to the Phoenix area results in significantly higher flows on the remaining transmission lines and causes a large increase in reactive power (Var) losses in the transmission network. The increase in Var consumption results in insufficient Vars for voltage support in the load area. Consequently, this condition creates low voltages in the system and makes the area deficient in reactive power. The system is constrained by voltage instability.

The voltage stability analysis was performed using Q-V analysis on the most reactive deficient buses in the Phoenix area. These buses were the Kyrene 500 kV, Kyrene 230 kV, Westwing 230 kV, and the Pinnacle Peak 230 kV buses.

C. Phoenix Area – SIL for 2003, 2004 and 2005

Analysis of the Phoenix-area transmission network resulted in area import limits based on the voltage stability limits discussed above. Operation of the Phoenix system within these limits ensures that the area does not experience voltage instability after a critical contingency. Voltage instability is characterized by a progressive fall in voltage magnitude at a particular location of the power system that may spread throughout the network causing a complete area voltage collapse and blackout.

To determine APS' SIL for the Phoenix area, the combined APS and SRP Phoenix-area import limits were first determined. The APS share of the import limit was then determined based on the allocation factor between APS and SRP. The combined and APS allocated SIL for the years 2003 through 2005 are outlined in Table 1.

Table 1
2003 – 2005 Simultaneous Import Limit

Year	Combined SIL (MW)	APS SIL (MW)
2003	8,557	3,621
2004	8,632	3,658
2005	8,733	3,709

Phoenix-area import limits across various load levels are shown in Figures 2, 3 and 4.

Figure 2

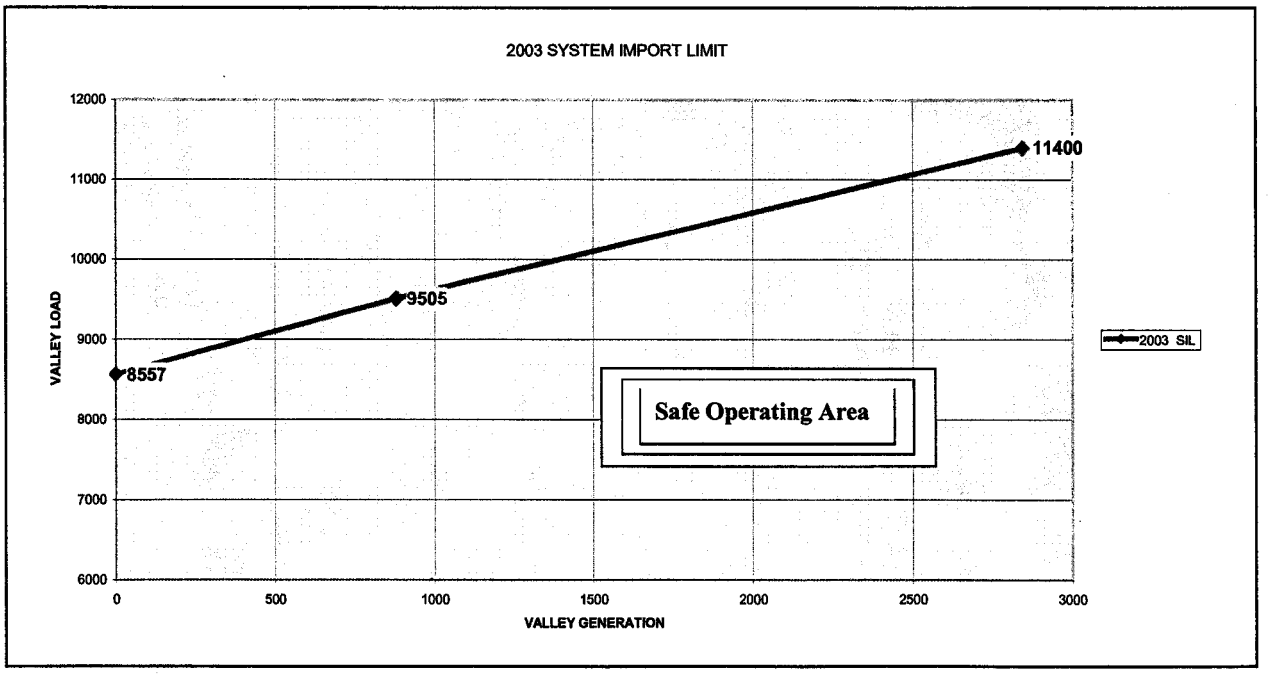

Figure 3

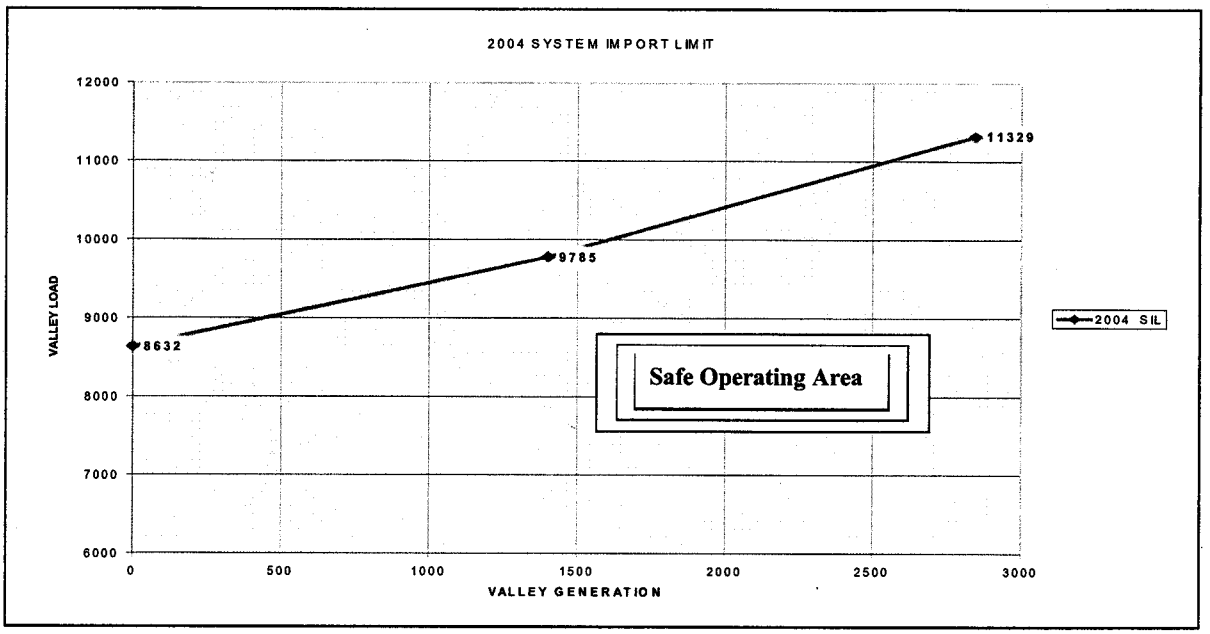

Figure 4

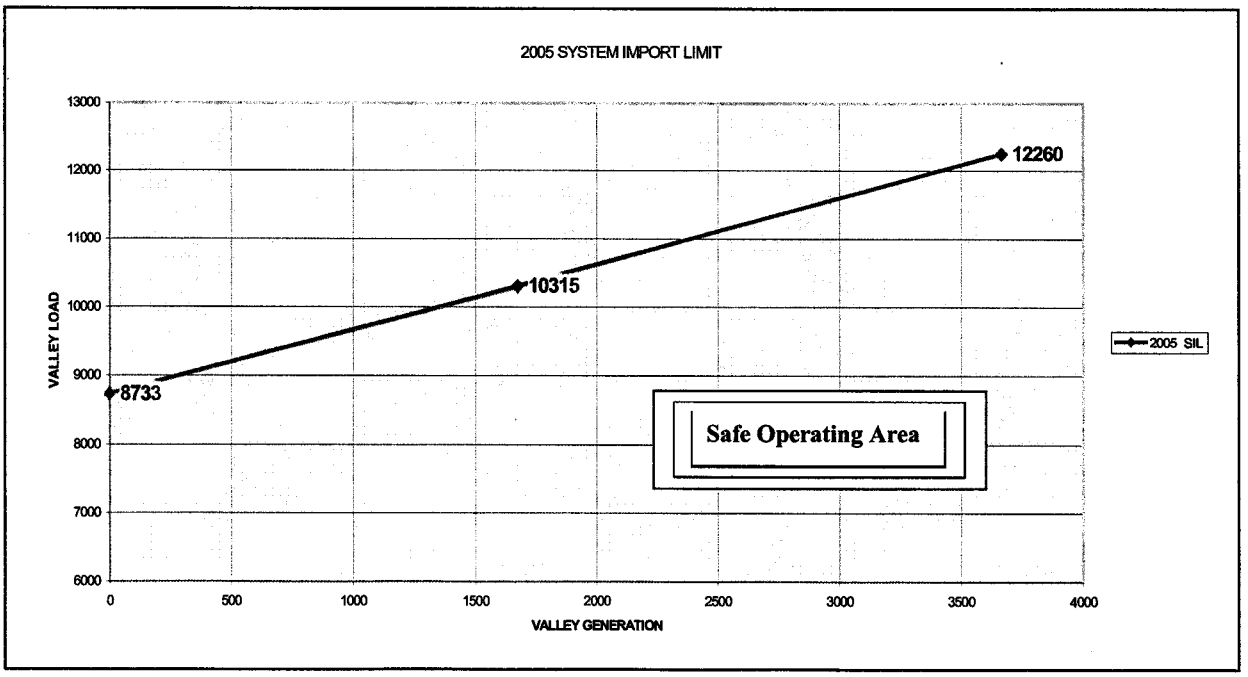

D. Generation Sensitivities

APS also conducted sensitivity analyses of generation impact on load-serving capability. The following table provides the results of these analyses for units that are both within and outside the Phoenix area.

Generation sensitivities inside the Phoenix area are listed in Table 2.

Table 2
Generation Sensitivities Inside Phoenix

Generation Source Increase by 100 MW	Load Serving Capability Increase (MW)
Agua Fria Generation	110
Kyrene Generation	147
Ocotillo Generation	141
Santan Generation	123
West Phoenix Generation	134

Generation sensitivities outside of the Phoenix Metro area are listed in Table 3.

Table 3
Generation Sensitivities Outside Phoenix

Generation Source Increase by 100 MW	Load Serving Capability Increase (MW)
Sundance Generation	35
Desert Basin Generation	24
Hassayampa Area Generation	0
Panda Gila River Generation	0

The results indicate that generators within Phoenix are more effective in increasing load-serving capability.

IV. YUMA AREA

A. Description of Yuma Area

Currently the Yuma area is served from three transmission sources:

- APS' North Gila 500/69 kV substation, which is located east of Yuma. Two 69 kV lines extend west and southwest from this substation into Yuma to serve Yuma area load. A third 69 kV interconnects into WAPA's Gila substation.
- WAPA's Gila 161/69 kV station, which is also located east of Yuma. From this station, APS has one 69 kV line into the Yuma load area and one 69 kV tie to APS's North Gila substation.
- APS' Yucca 69 kV station, which is located on the west side of Yuma near the Colorado River. APS local generation is located at this station, along with three 69 kV lines into the load area. The IID 75 MW steam-generating unit is also located at this substation.

Figure 5 shows the transmission system and the metering points for the Yuma area load pocket.

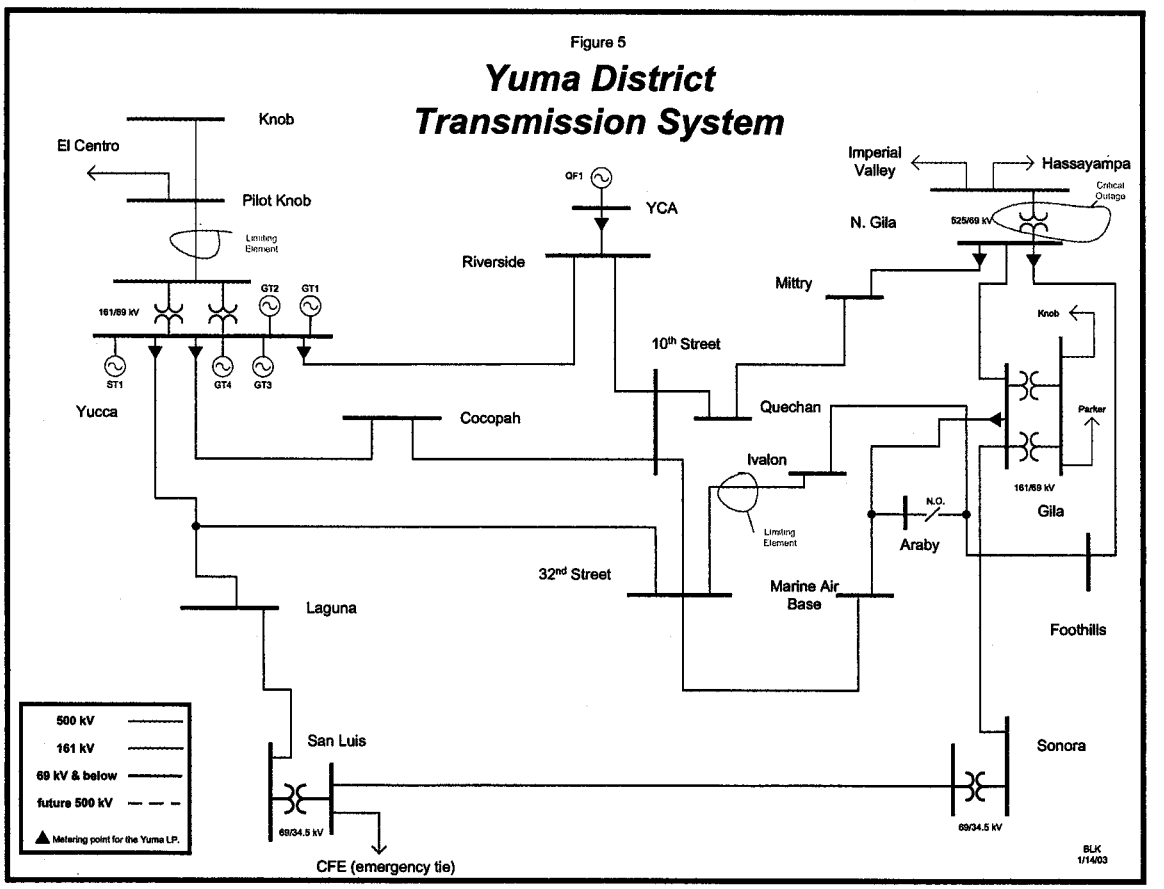

B. Yuma Area Critical Outages

The critical single contingency affecting the determination of the transmission import limit for the Yuma area is the loss of either the existing North Gila 500/69 kV transformer or the North Gila 69 kV bus. At North Gila, the 500/69 kV transformer consists of three single-phase units rated at 240 MVA and is connected through a 500kV ring bus to the Hassayampa-North Gila 500 kV line and the North Gila-Imperial Valley 500 kV line. The loss of the 69 kV bus at North Gila is possible, because it is configured as a main-and-transfer bus with no sectionalizing breaker.

The loss of either the North Gila 500/69 kV transformer or the 69 kV bus overloads the IID 161 kV line between the Pilot Knob substation and the Yucca substation during low generation conditions. In moderate generation conditions, the overload occurs on the 32nd Street-Ivalon 69 kV line. The emergency rating of the Pilot Knob-Yucca 161 kV line is 477 amps.

C. Yuma Area - SIL for 2003, 2004 and 2005

With planned system additions for the Yuma area, along with some accelerated projects (see Table 2), the SIL for the Yuma area will stay roughly constant at 164 MW for 2003, 2004 and 2005. Results of these studies are shown in Figures 6 through 8.

Figure 6

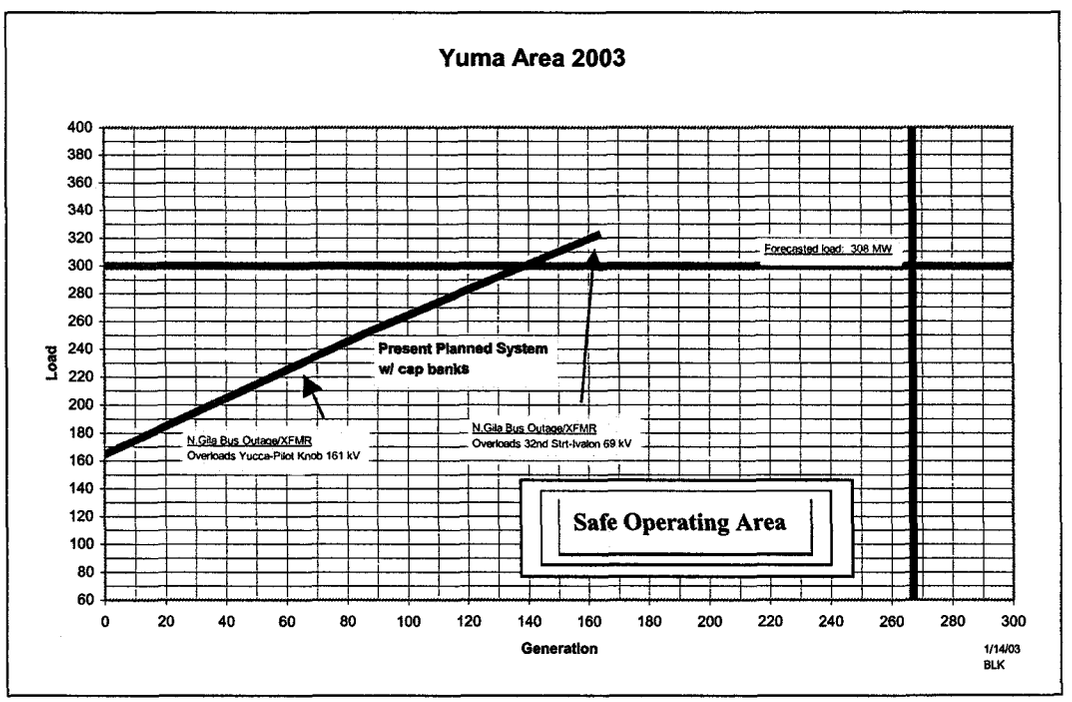

Figure 7

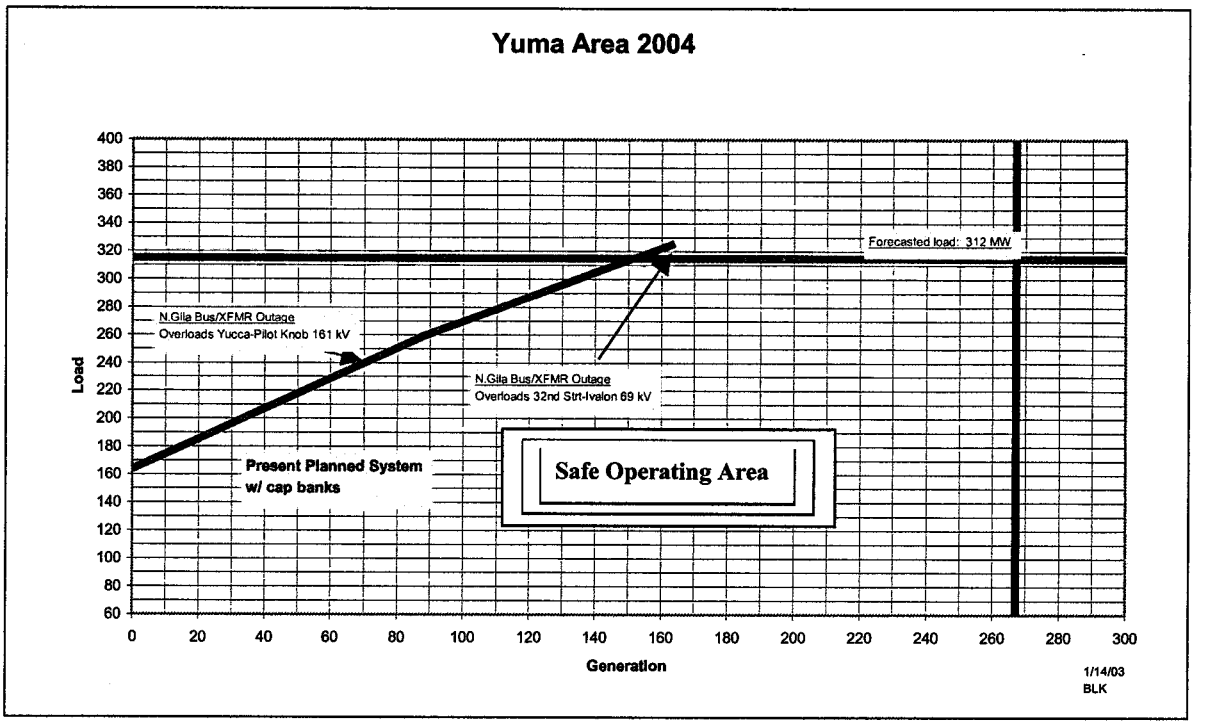

Figure 8

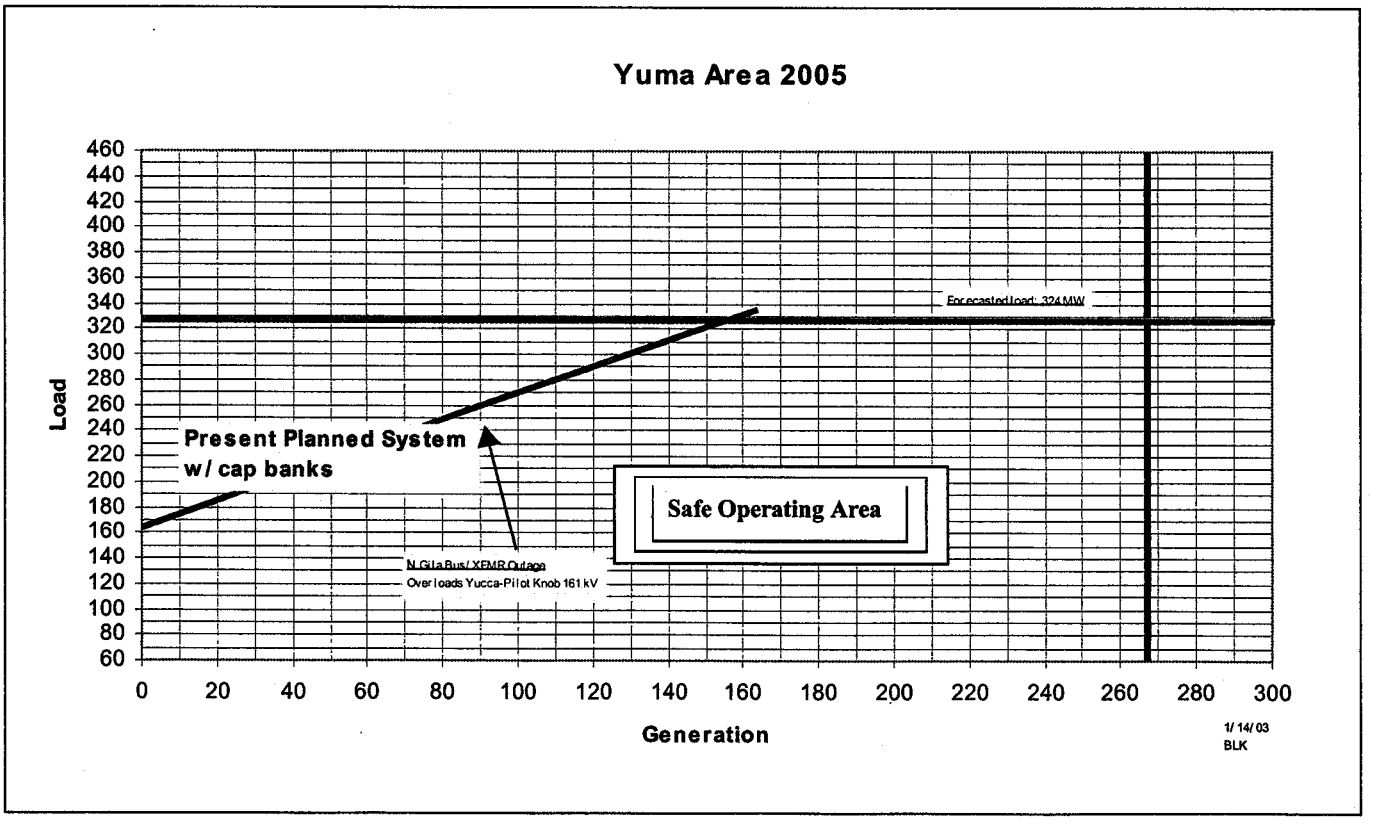

Also, the load listed along the vertical axis is the sum of the six 69 kV lines measured at their metering points in Figure 5, in addition to the YCA generation. In performing this analysis all planned projects were included in the model and several planned shunt capacitor banks were accelerated to maximize the capability of the transmission system by ensuing that the area was not voltage limited. These projects are listed in Table 4.

Table 4
Yuma Projects

Study Case	Case Description	
	System	Projects Added
2003 base case	Existing	Yucca-Cocopah 69kV re-conductor (planned 2003) Foothills 69kV, 32Mvar cap bank (advanced from 2006)
2004 base case	2003 base case	Riverside-10th Street 69kV re-conductor (planned 2004)
2005 base case	2004 base case	Yucca-Laguna 69kV re-conductor (planned 2005) Laguna 69kV, 28.8Mvar cap bank (planned 2005) 32nd Street 69kV, 32Mvar cap bank (advanced from 2006)
2005 sensitivity case	2005 base case	2nd North Gila 500/69kV, 240MVA transformer including addition of a 69kV bus section breaker (new) Foothills-Foothills tap 69kV re-conductor (advanced from 2007) 32nd Street-Ivalon 69kV re-conductor (advanced from 2006)

D. Generation Sensitivities

All generators in the Yuma Area are either connected to the Yucca 69 kV bus or very close to the Yucca 69 kV bus (YCA cogeneration) on the west side of Yuma. Because the critical outage results in a thermal overload on the west side of Yuma, these generators have equal impact on the import limit in the Yuma Area.

V. ANALYSIS OF RMR CONDITIONS

A. Phoenix Area

1. Annual RMR Conditions

An RMR condition exists when the local load is greater than the SIL. In such cases, the RMR condition is the amount of generation that must be located inside of the constrained load area to meet the utility's peak load. RMR conditions for APS' Phoenix area, as well as the combined APS and SRP Phoenix area, are shown in Table 5 and are represented in a load-duration curve in Figure 9.

Table 5

Phoenix RMR Conditions Without Valley Generation
MW

	APS			Phoenix Total		
	2003	2004	2005	2003	2004	2005
Peak Load	4,519	4,777	4,957	9,843	10,339	10,711
Reduction for Raceway/Gavilan Peak	(63)	(163)	(224)	(63)	(163)	(224)
Load	4,456	4,614	4,733	9,780	10,176	10,487
Generation	-	-	-	-	-	-
Reserves	-	-	-	-	-	-
Net Valley Generation	-	-	-	-	-	-
Import Capability	3,621	3,658	3,709	8,557	8,632	8,733
Net Gen + Import	3,621	3,658	3,709	8,557	8,632	8,733
Must-Run Generation	835	956	1,024	1,223	1,544	1,754
Hours Load Exceeds Gen + Imp	518	590	656	326	436	536
Energy - GWH	170	211	243	170	246	334
Energy Percent of Valley Load	0.9%	1.0%	1.1%	0.4%	0.5%	0.7%

Figure 9

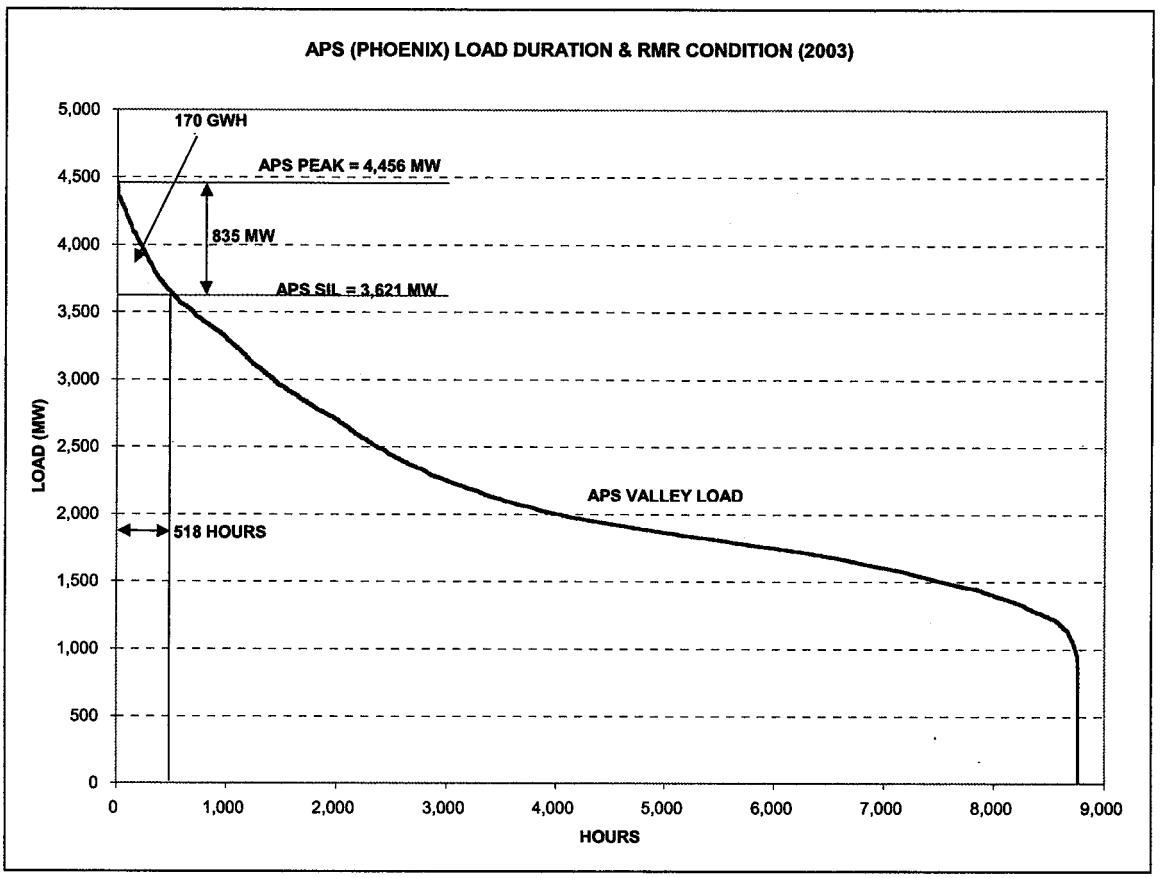

Table 5 shows that APS is expected to require from 835 MW to 1,024 MW of local generation resources over and above its import capability to meet peak load. These resources can be APS-owned local generation or non-APS owned generation located inside the Phoenix-area constraint, or transmission available from another owner (SRP) that can deliver within the constraint. For Phoenix, APS' generation is estimated to be in a must-run condition for between 518 to 656 hours per year. However, because RMR occurs only at peak, the amount of associated energy is only approximately one percent of APS' total Phoenix-area energy requirements, as shown in Figure 9 above.

The combined APS and SRP Phoenix-area system requires from 1,223 to 1,754 MW of resources, over and above transmission import capability, to meet the combined peak load.

2. Maximum Load Serving Capability (MLSC)

MLSC is the maximum load that can be reliably served in the load pocket. It is the import capability plus the generation capability located inside the load pocket, minus a reserve margin allowance for generation reliability. Based on the load forecast and SIL presented in this analysis, and existing and planned local generation, the following MLSCs for APS and Phoenix

were developed. The approach used also shows how much generation or transmission may be needed to reliably meet load.

These results along with the generation and transmission assumptions are depicted in Table 6A for APS. Note that the table does not include West Phoenix generation owned by PWEC or Phoenix-area generation owned by SRP. As shown on this table, non-APS generation ranges from 365 MW to 554 MW to serve APS' Phoenix-area load reliably. The energy associated with this capacity need is very small — 23 to 55 GWH.

Table 6A

Non APS/UDC Must-Run Generation To Meet APS Phoenix-Area Load (MW)

	APS		
	2003	2004	2005
Peak Load	4,519	4,777	4,957
Reduction for Raceway/Gavilan Peak	(63)	(163)	(224)
Load	4,456	4,614	4,733
APS Generation	660	660	660
Reserves	(190)	(190)	(190)
Net Phoenix-area APS Generation	470	470	470
Import Capability	3,621	3,658	3,709
Net Gen + Import	4,091	4,128	4,179
Non APS/UDC Gen Required	365	486	554
Hours Load Exceeds Gen + Import	152	200	230
Energy – GWH	23	42	55
Energy Percent of Phoenix-area Load	0.1	0.2	0.3

Similar data for the entire Phoenix area is shown in Table 6B. This table shows generation ownership in the Phoenix area by PWEC and SRP and transmission import capability of SRP. Table 6B shows that Phoenix-area loads can be served reliably with Phoenix-area generation owned by APS, SRP and PWEC.

Table 6B

Non APS/UDC Must-Run Generation To Meet Phoenix-Area Load (MW)

	Phoenix Total		
	2003	2004	2005
Peak Load	9,843	10,339	10,711
Reduction for Raceway/Gavilan Peak	(63)	(163)	(224)
Load	9,780	10,176	10,487
Generation	2,822	2,822	3,647
Reserves	(503)	(503)	(866)
Net Phoenix-area Generation	2,319	2,319	2,784
Import Capability	8,557	8,632	8,733
Net Gen + Import	10,876	10,951	11,514
Non APS/UDC Gen Required	(1,096)	(775)	(1,027)
Hours Load Exceeds Gen + Import	---	---	---
Energy – GWH	---	---	---
Energy Percent of Phoenix-area Load	0.0	0.0	0.0

3. Area Load Forecast

APS' actual peak load within the Phoenix-area constraint is shown in Table 7 for 1999-2002, along with projected peak load for 2003-2005. Projected peak load is based on the same assumptions embodied in APS' total system load forecast used for budgeting and planning. This peak load is the load measured just inside the defined Phoenix-area constraint. The peak load is net of EHV transmission losses of about 3.8 percent, and before losses incurred on the 230 kV and distribution systems.

Table 7

Phoenix and Yuma Load and Energy

(MW / GWH)

	HISTORICAL				FORECAST		
	1999	2000	2001	2002	2003	2004	2005
APS SYSTEM							
LOAD	4,919	5,479	5,687	5,502	5,723	6,023	6,269
ENERGY	23,749	25,186	25,765	25,549	26,494	27,841	28,999
LF	55.1%	52.3%	51.7%	53.0%	52.8%	52.6%	52.8%
APS VALLEY							
LOAD	3,384	3,886	4,219	4,206	4,519	4,777	4,957
ENERGY	14,369	16,597	17,134	18,004	19,397	20,561	21,277
LF	48.5%	48.6%	46.4%	48.9%	49.0%	49.0%	49.0%
APS YUMA							
LOAD	270	273	296	292	308	312	324
ENERGY	1,197	1,262	1,326	1,341	1,395	1,439	1,472
LF	50.6%	52.6%	51.1%	52.4%	51.8%	52.5%	51.8%
PHOENIX							
LOAD					9,843	10,339	10,711
ENERGY					45,278	47,319	48,958
LF					52.5%	52.1%	52.2%

APS Phoenix-area load represents about 80 percent of APS' total system load. The Phoenix area has historically had about a 49 percent load factor. Hourly loads were shaped based upon APS' 2000 actual hourly loads for the Phoenix area. The load forecast for the combined APS/SRP Phoenix-area system was based on load forecast information provided to the WECC by other utilities, with adjustments made for load inside versus outside the Phoenix area, and again shaped according to year 2000 actual hourly loads. Year 2000 actual shapes were used in all regional load modeling to maintain the appropriate relationship of diversity between utilities and load areas. Even within the Phoenix area, the peak load of one utility has a small amount of diversity with others.

In 2003, APS' Raceway substation, which serves the far north side of Phoenix, will be connected to WAPA's Westwing-Raceway 230kV line. In 2004, APS' Gavilan Peak substation will also be tied into WAPA's system via the Pinnacle Peak-Prescott 230kV line. After tying into these WAPA lines, service to these substations will not use APS import capability. Accordingly, these loads are subtracted from APS Phoenix-area loads.

4. Generation

There are currently three owners of generation electrically located inside the Phoenix area — APS with 660 MW, SRP with 1,520 MW, and PWEC with 642 MW. Load serving entities (i.e.,

APS and SRP) own a combined total of 2,180 MW of local generation that is currently in service. Table 8 shows operational data associated with each unit.

Table 8

PHOENIX AREA GENERATION

OPERATOR	PLANT	TYPE	SUMMER CAPABILITY	MINIMUM LOAD	MINIMUM UP TIME	MINIMUM DOWN TIME	FOR	EFOR	FUEL TYPE
APS	Ocotillo 1	ST	110	30	8	8	4%	6%	NG
APS	Ocotillo 2	ST	110	30	8	8	4%	6%	NG
APS	Ocotillo GT1	GT	50	4	1	2	10%	11%	NG
APS	Ocotillo GT2	GT	50	4	1	2	10%	11%	NG
APS	West Phoenix GT1	GT	50	4	1	2	10%	11%	NG
APS	West Phoenix GT2	GT	50	4	1	2	10%	11%	NG
APS	West Phoenix CC1	CC	80	30	3	8	3.5%	6%	NG
APS	West Phoenix CC2	CC	80	30	3	8	3.5%	6%	NG
APS	West Phoenix CC3	CC	80	30	3	8	3.5%	6%	NG
APS SUBTOTAL			660						
SRP	Agua Fria 1	ST	113	57	8	8	4%	6%	NG
SRP	Agua Fria 2	ST	113	57	8	8	4%	6%	NG
SRP	Agua Fria 3	ST	181	92	8	8	4%	6%	NG
SRP	Agua Fria 4	GT	73	35	1	2	10%	11%	NG
SRP	Agua Fria 5	GT	73	32	1	2	10%	11%	NG
SRP	Agua Fria 6	GT	70	32	1	2	10%	11%	NG
SRP	Crosscut HY1	HY	3	N/A	N/A	N/A	0%	0%	WAT
SRP	Kyrene 1	ST	34	14	8	8	4%	6%	NG
SRP	Kyrene 2	ST	72	29	8	8	4%	6%	NG
SRP	Kyrene GT4	GT	59	25	1	2	10%	11%	NG
SRP	Kyrene GT5	GT	53	24	1	2	10%	11%	NG
SRP	Kyrene GT6	GT	53	24	1	2	10%	11%	NG
SRP	Kyrene CC1	CC	250	161	3	4	8%	9%	NG
SRP	Santan 1	CC	92	35	3	8	3.5%	6%	NG
SRP	Santan 2	CC	92	35	3	8	3.5%	6%	NG
SRP	Santan 3	CC	92	36	3	8	3.5%	6%	NG
SRP	Santan 4	CC	92	35	3	8	3.5%	6%	NG
SRP	Santan 5	CC	275	165	3	4	8%	9%	NG
SRP	Santan 6	CC	550	330	3	4	8%	9%	NG
SRP	South Consolidated 1	HY	1						WAT
SRP	Transport GT1	GT	4						NG
SRP SUBTOTAL			2,345						
PWEC	West Phoenix CC4	CC	112	84			3.5%	6%	NG
PWEC	West Phoenix CC5	CC	530	178			8%	9%	NG
PWEC SUBTOTAL			642						
VALLEY TOTAL			3,647						

APS owns West Phoenix CC 1-2-3, West Phoenix CT 1-2, Ocotillo ST 1-2, and Ocotillo CT 1-2. These units collectively have a 660 MW summer rating. These units have historically operated at capacity factors in the 3-30 percent range, and are expected to operate at lower capacity factors for the next few years as new high-efficiency plants come on line in Arizona and the Southwest. West Phoenix steam units 4, 5 and 6 are on cold standby and were not included in the study.

SRP owns the Agua Fria, Kyrene and Santan generating stations inside the Phoenix area, totaling 1,520 MW of generation. These units were mostly built in the late 1950s to the mid-1970s. The new Kyrene CC unit went into service in 2002. SRP has received a Certificate of Environmental Compatibility to construct another 825 MW of combined-cycle generation at the Santan plant. For this study, it is assumed the new Santan units will go into service in 2005.

PWEC has constructed West Phoenix CC 4 (112 MW), which went into service in June 2001, and is constructing West Phoenix CC 5 (530 MW), which expected to be on line by the summer of 2003. These units will improve reliability to the Phoenix area.

5. Reserves

Reliability within a load pocket such as Phoenix must be evaluated differently than for an unconstrained system. For example, although a 15 percent reserve margin or a largest hazard margin may be adequate for unconstrained total system loads, it does not provide adequate reliability to load pockets that cannot access all reserves present in the WECC interconnected system. APS performs an analysis that considers the size, forced outage rate, and effective forced outage rate of each unit in the load pocket to determine the probability that enough generation will be available when needed.

This analysis results in a reserve requirement of 190 MW for APS' Phoenix generating units. Specifically, the reserve analysis considers 470 MW of APS local generation as effectively firm (i.e., 660 MW minus 190 MW).

The reserve values are used in calculating the load serving capability for the APS-Phoenix and for the total-Phoenix load areas. In addition, the loads used in this analysis are based on Phoenix experiencing average weather. If the Phoenix area has a hot summer, APS load would be higher than projected, and the gas turbine and combined-cycle units' output would be reduced due to the hotter weather.

B. Yuma Area

1. Annual RMR Conditions

RMR conditions for the Yuma constrained area are shown in Table 9 and pictorially represented in a load-duration curve in Figure 10. Table 9 shows that APS requires from 144 MW to 160 MW of resources over and above its transmission import capability to meet peak load in Yuma. These resources can be APS-owned generation or non-APS owned generation located inside the constrained area. APS is in a must-run condition for between 3,184 to 3,834 hours per year in Yuma and the amount of associated energy is approximately 11.5 percent of APS' total Yuma energy requirement.

Table 9

Yuma RMR Conditions Without Generation
MW

	APS		
	2003	2004	2005
Load	308	312	324
Generation	-	-	-
Reserves	-	-	-
Net Generation	-	-	-
Import Capability	164	164	164
Net Gen + Import	164	164	164
Must-Run Generation	144	148	160
Hours Load Exceeds Gen + Imp	3,184	3,512	3,834
Energy - GWH	143	162	186
Energy Percent of Yuma Load	10.2	11.3	12.6

Figure 10

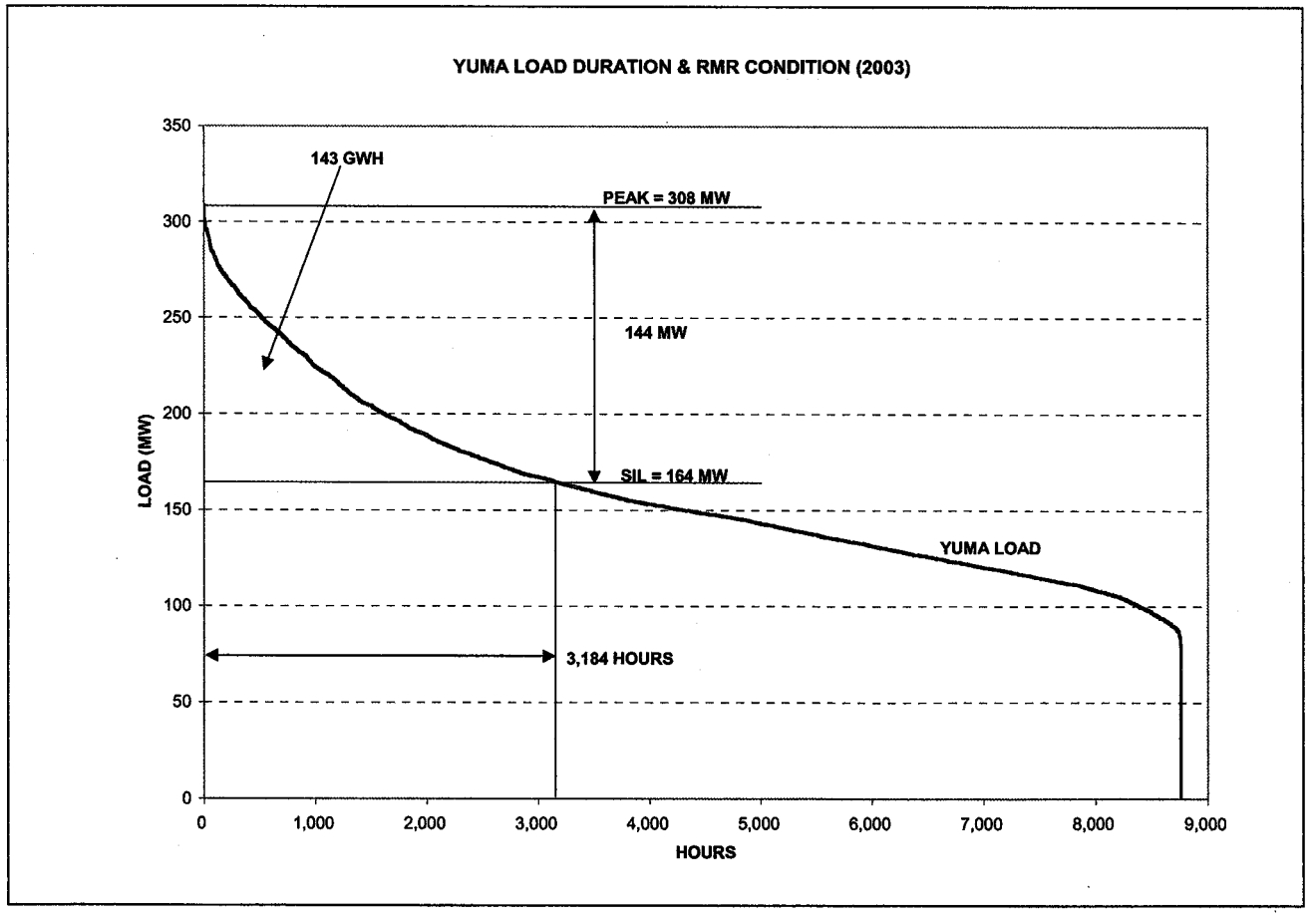

2. *Maximum Load Serving Capability (MLSC)*

Based on the load forecast and SIL presented in this report, and the 139 MW of APS local generation, the following MLSCs were developed. This approach also shows how much generation or transmission may be needed to reliably meet load. As shown in Table 10, from 2003 to 2005 APS could serve 233 MW of load without additional resources. With a load forecast of between 308 MW and 324 MW, APS will require from 75 MW to 91 MW of additional generation inside the load pocket. This resource need could be met from non-APS owned generation within the load pocket. Also, when the Yucca steam and YCA units are running, APS' requirement for generation inside the load pocket is reduced on a one-for-one basis. Approximately 21 GWH to 35 GWH of associated energy would be required.

Table 10

Non APS Must Run Generation To Meet Yuma Load
MW

	APS		
	2003	2004	2005
Load	308	312	324
Generation	139	139	139
Reserves	(70)	(70)	(70)
Net Yuma Generation	69	69	69
Import Capability	164	164	164
Net Gen + Import	233	233	233
Non APS Must Run Generation	75	79	91
Hours Load Exceeds Gen + Imp	836	962	1,104
Generation - GWH	21	27	34
Energy Percent of Yuma Load	1.5	1.8	2.3

3. *Area Load Forecast*

Table 7 shows APS' Yuma peak load for 1999-2002, and projected peak for 2003-2005. Projected peak is based on the same assumptions used in APS' total system load forecast used for budgeting and planning. This peak is the load measured just inside the Yuma area. It is net of EHV transmission losses of about 3.8 percent, and before losses incurred on the 69 kV and distribution systems. Yuma load represents approximately 5 percent of APS' total system load. Yuma has historically had a slightly higher load factor than that of the Phoenix area — 52 percent compared to 49 percent. Hourly loads were shaped using APS' Yuma actual hourly loads for 2000. Year 2000 actual shapes were used in all regional load modeling to maintain the appropriate relationship of diversity between utilities and load areas.

4. Generation

APS, IID and YCA own generation inside the Yuma load pocket. These plants have a summer capacity rating of 267 MW. Five of the six units run on natural gas while the other plant (Yucca CT 4) runs on oil. Additional power plant data for this generation is provided in Table 11. Of these plants, only the combustion turbines are owned by APS.

Although operated by APS, IID dispatches its steam plant to meet its load and spinning reserve needs. YCA is a cogeneration plant that has a contract with San Diego Gas & Electric (SDG&E). During summer 2002, APS purchased the output of this plant from SDG&E to serve the Yuma load area. Although APS has no dispatch rights to these units, whenever the units are running they provide internal generation in the Yuma area for purposes of using the import nomogram.

Table 11

YUMA-AREA GENERATION

OPERATOR	PLANT	TYPE	SUMMER CAPABILITY	MINIMUM LOAD	MINIMUM UP TIME	MINIMUM DOWN TIME	FOR	EFOR	FUEL TYPE
APS	Yucca GT1	GT	18	2	1	2	10%	10%	NG
APS	Yucca GT2	GT	18	2	1	2	10%	10%	NG
APS	Yucca GT3	GT	51	5	1	2	10%	10%	NG
APS	Yucca GT4	GT	52	5	1	2	10%	10%	FO2
APS SUBTOTAL			139						
IID	Yuma Axis 1	ST	75	18	8	8	4%	6%	NG
YCA	Yuma Cogen 1	CC	36	14	N/A	N/A	3.5%	6%	NG
YCA	Yuma Cogen 2	CC	17	7	N/A	N/A	3.5%	6%	NG
YCA SUBTOTAL			53						
YUMA TOTAL			267						

5. Reserves

Using a probabilistic generation analysis, the reserve margin for Yuma was calculated to be 70 MW.

VI. ECONOMIC ANALYSIS OF RMR

A. Introduction

To consider potential economic effects resulting from using local generation or arising from RMR conditions, an economic analysis was performed using a regional dispatch model. For this economic analysis, the production cost of meeting APS and SRP system loads was determined with the existing transmission import limitations in place. Next, a second hypothetical case was built in which the transmission import limits were removed. Comparing the two cases shows the economic costs of the transmission constraint.

These two cases were simulated with GE MAPS and their outputs were compared to determine the cost of transmission constraints. GE MAPS is a detailed regional production-costing model that includes the generation and transmission system of the entire WECC. In its dispatch, the model meets a company's load requirements by generating from the company's own units or buying available more economic generation from the market. The GE MAPS model also shows sales of economic generation to other utilities in the region subject to regional transmission constraints.

Much of the data used in modeling comes from public sources, however some of GE MAPS assumptions have been developed by APS. The GE MAPS database on existing generation was initially developed by several utilities in the West in the early 1990s to evaluate the economics of interregional transmission projects. It has been enhanced by the WECC in the mid-1990s and, like many other users of the model, APS continues to enhanced it to reflect system improvements and resources. This model includes all new generation expected to be built in the West, including the plants under construction or in operation near Hassayampa.

The transmission modeling in GE MAPS is based on the WECC's current power flow case for 2003, and includes the new Palo Verde-Rudd 500 kV transmission line. Transmission modeling of Yuma was enhanced by APS to accurately model the transmission constraints in that load pocket, based on APS' operational experience. The transmission model is an electrical flow model as opposed to a transport model. That means that transmission flows are subject to physical electrical constraints as well as scheduling constraints. Electrical constraints of the system are based on the WECC's path rating catalog, with additional local constraints such as the Phoenix import constraints. A description of GE MAPS (Appendix B) as well as some of its output is provided in Appendices C and D to this report.

The following items were quantified based on the GE MAPS simulations:

- Number of hours per year the Phoenix and Yuma area transmission system is expected to be constrained by the import limits;
- Phoenix and Yuma generation capacity factors;

- APS and SRP cost to serve their system, including fuel, variable O&M, purchase power cost and wholesale interchange sales margins; and
- Phoenix and Yuma generation emissions.

West Phoenix CC 4 and 5 and Santan CC 5 and 6 were included in the simulation. West Phoenix units were not assumed to be under the dispatch control of APS, though they may be selling to APS as may any of the other new generators. When the new West Phoenix combined cycles are operating, whether or not they are selling to APS, they mitigate must-run conditions in the Phoenix area because the plants are electrically located inside the Phoenix-area constraint. Thus, if these units are scheduled outside the Phoenix area, a like-amount of power can be counter-scheduled back into the Phoenix area without affecting the transmission import limits. Due to the high efficiency of new combined cycle units, it is anticipated that older existing generation within the Phoenix area will operate less than it has historically. This older existing generation, however, remains particularly valuable as inexpensive capacity reserves.

B. Phoenix

1. Phoenix Imports

Transmission imports to APS and to the Phoenix load pocket are provided in Appendix C for the summers of 2003-2005. During non-summer months, transmission imports do not approach their limits. Additionally, actual import flows for the summer of 2002 are also shown for reference. However, when considering these power flows, note that the Palo Verde-Rudd 500 kV transmission line was not in service in 2002 but is assumed to be in service by summer 2003. Due to additional transmission import capacity from this new line, projected flows in 2003 through 2005 are higher than those shown in 2002. The chart does, however, confirm the pattern of flows produced by the GE MAPS model.

Table 12 shows that under economic dispatch conditions for APS Phoenix-area generation, APS could approach its transmission import limits for 32-174 hours per year, while total Phoenix imports would be limited between 0 and 30 hours per year. The addition of Santan 5 and 6 in 2005 would further relieve the import constraints into the Phoenix area. While the APS import would be limited to 174 hours, APS would be able to meet its load requirements primarily by running its Phoenix-area generation. During these hours, it would be more economical to import less expensive power generated either by APS-owned units outside the Phoenix area or purchased from the wholesale market. However, the amount of energy associated with re-dispatching as a result of the transmission constraint amounts to only 44 GWH in 2005 compared to APS' overall Phoenix-area energy requirements of approximately 21,000 GWH. This is approximately 0.2 percent of required energy.

Table 12

IMPACT OF ELIMINATING PHOENIX IMPORT LIMITS

	With Import Limits			Without Import Limits			Difference (Without minus With)		
Hours Limiting	2003	2004	2005	2003	2004	2005	2003	2004	2005
APS	32	146	174	0	0	0	(32)	(146)	(174)
Phoenix	4	30	0	0	0	0	(4)	(30)	0
Phx Plant Generation (GWH)									
APS	64	98	88	57	55	44	(7)	(43)	(44)
Phoenix	1,431	1,924	3,776	1,422	1,877	3,731	(9)	(47)	(45)
Phx Plant Capacity Factor (%)									
APS	1.1	1.7	1.5	1.0	1.0	0.8	-0.1	-0.7	-0.8
Phoenix	5.8	7.8	11.8	5.8	7.6	11.7	0.0	-0.2	-0.1
Cost of Constraints ($M)									
Valley Utilities Total							0.03	0.4	0.7

2. *Operation of Phoenix-Area Generating Units*

Historically the Phoenix area's combined-cycle power plant capacity factors have ranged from 3 to 48 percent, with an average of about 19 percent. Capacity factors for steam-fired plants ranged from 3 to 33 percent, averaging about 10 percent. Capacity factors for simple-cycle combustion turbines ranged 0 to 13 percent, averaging about 1-1/2 percent. Historical capacity factors are shown in the Table 13 for APS and SRP by plant type for the period 1991 to 2000.

Operation of these units in 1999-2001 was higher than the historical average because the Western Interconnection and the Phoenix area both experienced high price volatility, high load growth, and few new generation resources had been added since the 1980s. With new higher-efficiency power plants coming on line by 2003, as well as the presence of the new Palo Verde-Rudd 500 kV transmission line, the older Phoenix-area units are expected to run at lower capacity factors. As noted above, however, these units remain critical to maintaining Phoenix-area reliability.

Even if the Phoenix-area transmission import limits were totally eliminated, these older units would still be needed to economically meet summer peak loads. Elimination of the constraints only reduces the capacity factors of all Phoenix-area plants — including West Phoenix 4 and 5 and Santan 5 and 6 — by less than 1 percent. Removing the transmission constraint reduces local generation by less than 50 GWH per year. Table 12 summarizes the results of the simulation analysis.

Table 13

PHOENIX-AREA POWER PLANT HISTORICAL CAPACITY FACTOR
(%)

	1991	1992	1993	1994	1995	1996	1997	1998	1999	2000
APS										
STEAM	6.6	9.6	9.8	12.9	8.9	8.7	10.6	16.1	22.5	33.1
COMBINED CYCLE	18.2	23.2	29.6	32.4	28.5	22.7	18.8	27.0	33.9	47.8
COMBUSTION TURBINE	0.9	1.3	1.1	2.0	1.0	1.3	2.4	4.4	4.5	13.3
SRP[1,2]										
STEAM	5.8	7.4	5.1	3.5	5.3	5.9	5.5	7.3	20.7	23.6
COMBINED CYCLE	15.7	3.0	6.2	9.0	8.3	5.1	4.6	9.7	23.2	27.9
COMBUSTION TURBINE	0.7	0.1	0.3	0.3	0.0	0.1	0.2	0.4	1.6	2.0
TOTAL PHOENIX										
STEAM	6.1	8.0	6.6	6.3	6.4	6.7	7.1	10.0	21.2	26.5
COMBINED CYCLE	16.8	11.9	16.5	19.3	17.2	12.9	10.6	17.0	27.7	36.3
COMBUSTION TURBINE	0.7	0.5	0.6	0.9	0.4	0.5	1.0	1.8	2.6	5.8

3. Cost Impacts

An estimate of the cost of the transmission import constraints can be determined by comparing the system cost for APS and SRP to serve their customers with and without constraints. Costs included in the analysis are fuel, variable O&M, purchased power and wholesale sale margin credits. The results of this analysis showed no measurable savings in 2003 for APS or for the total Phoenix area to completely relieve the constraints. Potential savings in 2004 and 2005 averaged about $500,000 per year for the total Phoenix area or 0.1 percent of the combined production cost. See Table 12.

4. Emissions Impact

In addition to economic modeling, the GE MAPS analysis evaluated the change in plant air emissions that would result from removing the transmission constraint. Specifically, the emission impact to the Phoenix area from removing transmission constraints and "moving" generation outside the Phoenix area was calculated. Four criteria pollutants are routinely tracked for power plants: NO_X, CO, VOCs and PM_{10}. Maricopa County is a non-attainment area for CO, VOCs and PM_{10}. NO_X is a precursor for ozone and therefore is included.

The emissions impact from power plant emissions in the Phoenix area was estimated by using the average emission rates of APS Phoenix-area units along with the modeled change in energy production. Emissions were also estimated for the other non-APS Phoenix-area units. Changes in emissions resulting from entirely eliminating the transmission import constraint into Phoenix are

shown in Table 14. For comparison purposes, total emissions in Maricopa County were estimated by Maricopa County Environmental Services Department for 1999. Their emissions estimates include all stationary point sources, area sources, non-road mobile sources and on-road mobile and biogenic sources. To put the results into perspective, changes in Phoenix-area power plant emissions are shown as a percentage of total Maricopa County emissions.

Table 14
Phoenix Area Air Emissions Reduction

Pollutant	Avg. Reduction (tons/year)	Reduction of Phoenix Area Emissions (% of total emissions from all sources)
VOC	1.0	0.001
NO_x	29.5	0.049
CO	5.5	0.002
PM_{10}	1.8	0.002[1]

[1]Reduction % is based on 1994 actual emissions.

Table 15 shows APS and Phoenix-area emissions by type.

Table 15

PHOENIX POWER PLANT EMISSIONS (TONS)

	With Import Limits			Without Import Limits			Difference (Without minus With)		
NOx	2003	2004	2005	2003	2004	2005	2003	2004	2005
APS	62.8	102.7	95.4	56.4	53.9	43.2	(6.5)	(48.8)	(52.2)
Phoenix	141.6	201.5	260.6	134.7	151.8	209.1	(6.9)	(49.7)	(51.5)
CO									
APS	5.5	14.1	13.6	4.8	5.7	3.7	(0.7)	(8.5)	(9.9)
Phoenix	33.2	49.0	82.3	32.4	40.2	72.5	(0.8)	(8.7)	(9.8)
PM_{10}									
APS	2.5	5.2	5.0	2.2	2.4	1.7	(0.3)	(2.9)	(3.2)
Phoenix	37.5	51.6	97.5	37.1	48.6	94.3	(0.4)	(3.0)	(3.2)
VOC									
APS	1.3	2.6	2.7	1.2	1.1	0.9	(0.1)	(1.5)	(1.8)
Phoenix	14.0	19.7	35.4	13.8	18.1	33.6	(0.2)	(1.6)	(1.8)

C. Yuma

1. Yuma Imports

Transmission imports to the Yuma load pocket are provided in Appendix D. Unlike the Phoenix area, these imports do approach their limits at various times throughout the year. These plots are included in Appendix D for the cases in which the limits were removed.

Table 16 shows that APS could approach its import limits for 974 to 1,196 hours per year. The energy associated with these hours amounts to 50 to 57 GWH. During these hours, it would have been more economical to import cheaper power either generated on APS own units outside the Yuma area or purchased from the wholesale market if the import limits were increased.

Table 16

IMPACT OF ELIMINATING YUMA IMPORT LIMITS

	With Import Limits			Without Import Limits			Difference (Without minus With)		
Hours Limiting	2003	2004	2005	2003	2004	2005	2003	2004	2005
APS/Yuma	1,066	974	1,196	0	0	0	(1,066)	(974)	(1,196)
Yuma Generation (GWH)									
APS	54	50	57	0	1	1	(54)	(49)	(56)
Yuma	86	103	118	32	55	62	(54)	(48)	(56)
Yuma Plant Capacity Factor (%)									
APS	4.4	4.1	4.7	0.0	0.2	0.1	-4.4	-3.9	-4.6
Yuma	4.9	8.1	9.3	4.9	8.1	9.3	0.0	0.0	0.0
Cost of Constraints ($M)									
APS							(1.5)	(1.3)	(1.5)

2. Operation of Yuma Units

Historically, the Yucca CTs have operated at capacity factors of between 0.5 up to 7.9 percent, as shown in Table 17. On average they are in the 1 to 2 percent range.

Table 17

YUMA POWER PLANTS HISTORICAL CAPACITY FACTOR
(%)

	1991	1992	1993	1994	1995	1996	1997	1998	1999	2000
YUCCA										
CT1	0.2	0.9	0.3	0.6	0.4	0.4	1.1	1.5	1.4	5.0
CT2	0.1	1.1	0.4	0.4	0.5	0.4	1.2	1.5	1.4	6.9
CT3	1.7	4.9	1.5	1.4	1.0	1.4	2.8	3.6	3.5	12.2
CT4	0.0	0.2	0.0	0.2	0.0	0.2	0.2	0.7	0.3	4.8
Total Yucca	0.7	2.2	0.7	0.7	0.5	0.7	1.4	2.0	1.8	7.9
YUMA AXIS	13.5	9.4	18.4	15.9	15.3	33.3	45.2	45.4	53.7	41.3
TOTAL YUMA	5.0	4.6	6.7	5.9	5.5	11.7	16.2	16.7	19.3	19.2

3. Cost Impacts

The GE MAPS analysis indicates that the Yuma import limit will be constraining from 974 to 1196 hours per year. Totally relieving the constraints could save APS from $1.3 to $1.5 million per year. See Table 16.

4. Emission Impacts

The emission impact on the Yuma area due to a potential relieving of transmission constraints and "moving" generation outside of the Yuma area was determined by GE MAPS similarly to the Phoenix analysis. Unlike Phoenix, however, Yuma County is a non-attainment area for PM_{10} only. Impacts on power plant emissions in Yuma were estimated by using average emission rates of APS units along with the change in energy production. Emissions were also estimated for the other non-APS units. By entirely eliminating the import limits into Yuma, emissions produced by power plants located inside the Yuma load pocket would change as shown in Table 18.

Table 18

YUMA POWER PLANT EMISSIONS (TONS)
(Includes Yucca 1-4 and Yuma Axis)

	With Import Limits			Without Import Limits			Difference (Without minus With)		
	2003	2004	2005	2003	2004	2005	2003	2004	2005
NOx	189	186	203	24	43	48	(165)	(143)	(155)
CO	39	43	50	7	13	14	(32)	(30)	(36)
PM_{10}	9	10	11	2	4	4	(7)	(6)	(7)
VOC	10	9	11	0	1	1	(10)	(9)	(10)

VII. Transmission Alternatives to Mitigate RMR

A. Phoenix Area

Two transmission alternatives were evaluated as potential mitigation of RMR conditions for the Phoenix area. For comparison purposes, a cost-benefit analysis was performed on the 2005 case with no Phoenix area generation operating.

The first alternative is the addition of 600 Mvar of shunt compensation (e.g. a static var compensator-SVC) at Kyrene with associated remedial action scheme logic and switching equipment to automatically insert the capacitor portion of the SVC at a very high speed upon detection of a loss of the Jojoba-Kyrene 500kV line. This alternative mitigates the voltage instability limitation by adding a strong reactive source of 600 Mvars of shunt compensation into the Phoenix area at the location that has lost the voltage support from the Palo Verde/Hassayampa area. This alternative would increase import capacity by 452 MW for a generation cost savings of $720,000 in 2005. However, the SVC alternative would cost $16 million. The annualized cost associated with this investment is estimated to be $2.4 million.

The second alternative considered was to modify the existing transmission system by looping the Jojoba-Kyrene 500kV line into the Rudd 500kV substation. This alternative is limited by the Rudd 500/230 kV transformers reaching thermal overload for a Rudd-Kyrene 500 kV line outage. This alternative provides no increase in SIL and, in fact, lowers the SIL due to increased loading on Rudd 500/230 kV transformers.

Neither of these alternatives is cost justified for the period covered by this study.

B. Yuma Area

For the 2005 timeframe, a second 500/69 kV 240 MVA transformer was added along with a 69 kV bus section breaker to the North Gila substation to evaluate the resultant increase in the SIL and MLSC for the Yuma area, and the resulting mitigation of RMR conditions. The cost of this project is estimated to be $3.5 million. With no local generation, completion of this project will increase the SIL by approximately 110 MW. Figure 11 shows the effect on the load serving capability (at or below the load forecast) of the Yuma area from adding the transformer.

This sensitivity case contains the same planned additions as in the 2005 base case (see Table 4) plus the addition of the re-conductoring of the 32nd Street-Ivalon 69 kV line and the Foothills-Foothills tap 69 kV line. These two additional projects are presently planned for 2006 and 2007, respectively, however both were advanced to maximize the effect of adding the second transformer.

Figure 11

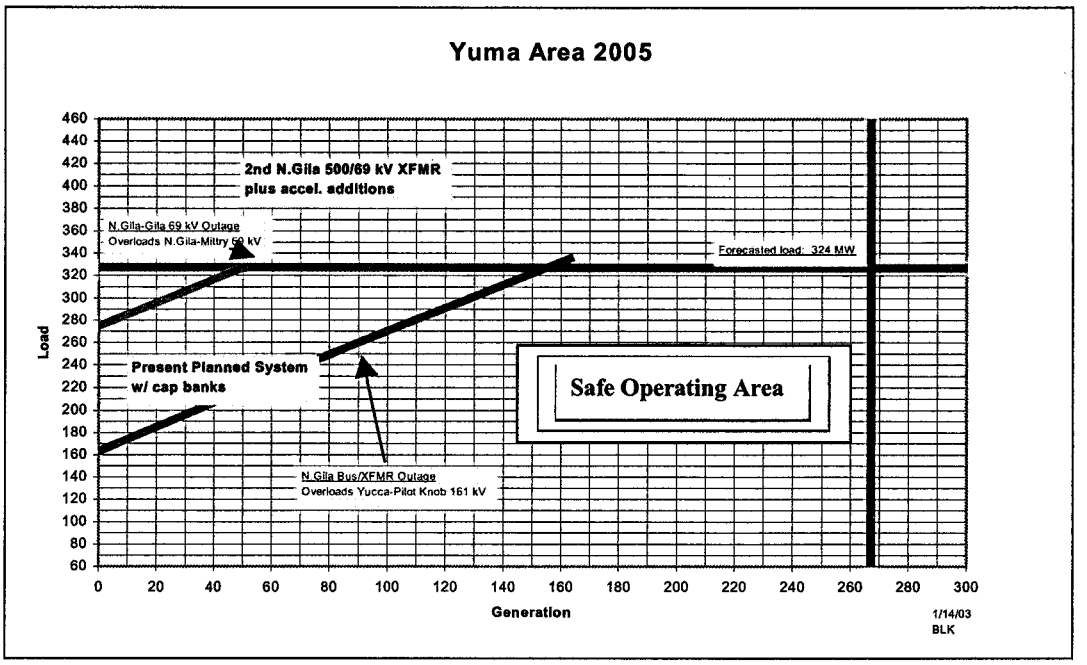

With a cost of $3.5 million, the addition of the second N. Gila 500/69 kV transformer appears to be cost justified and will be further studied.

VIII. CONCLUSIONS

Phoenix Area Conclusions

1. During the summer, APS Phoenix-area load is expected to exceed the available transmission import capability for approximately 500 hours in 2003 and 650 hours in 2005. However, these hours represent only one percent of the annual energy requirements for APS' Phoenix area.

2. From a total Phoenix load, transmission, and resources viewpoint (APS, SRP, and PWEC), import limits are expected to cause APS local generation to be dispatched out of economic dispatch order for 32 hours in 2003, 146 hours in 2004, and 174 hours in 2005.

3. The estimated annual economic cost of Phoenix-area generation required to run out of economic dispatch order is estimated to be $720,000 in 2005, compared to a cost of approximately $16 million to relieve 452 MW of the Phoenix area's transmission constraint. Thus, the transmission alternative currently is not cost justified.

4. All Phoenix-area transmission and local generation are necessary to reliably serve all Phoenix-area peak load.

5. In capacity terms, APS will require from 365 MW in 2003 to 554 MW in 2005 of non-APS resources within the Phoenix area to serve the APS Phoenix-area load. These resources could be supplied from non-APS local generation (including PWEC West Phoenix Units 4 and 5, SRP Phoenix-area generation, or newly constructed local generation) or from remote generation delivered to APS using SRP Phoenix-area import capability.

6. Non-APS generation outside of the Phoenix load area (or inside the Phoenix load area when serving load outside) has the following impact on Phoenix-area import capability, measured as a percent of additional MW of import capability to MW of output:

   West Phoenix Units 4 and 5.....134%

   Sundance..... 35%

   Desert Basin..... 24%

   Hassayampa Area..... 0%

   Panda Gila River..... 0%

7. Removing the transmission constraint would reduce total Phoenix-area air emissions by the following average annual amounts over the 2003-2005 period.

Table C1
Phoenix Area Air Emissions Reduction

Pollutant	Avg. Reduction (tons/year)	Reduction of Phoenix Area Emissions (% of total emissions from all sources)
VOC	1.0	0.001
NO_x	29.5	0.049
CO	5.5	0.002
PM_{10}	1.8	0.002

8. Removing the import restriction into the Phoenix area reduces the APS local generation capacity factor from 1.4% to 0.9%.

Yuma Area Conclusions

9. The Yuma-area load is expected to exceed the available transmission import capability for approximately 3,200 hours in 2003 and 3,800 hours in 2005, although the amount of total load in the Yuma area is only approximately 300 MW.

10. From a total Yuma load, transmission, and resources viewpoint (APS, IID, and YCA), the import constraint could cause APS Yuma generation to be dispatched out of economic dispatch order for approximately 1,070 hours in 2003, 975 hours in 2004, and 1,200 hours in 2005.

11. The addition of a second 500/69 kV transformer at the North Gila station in the Yuma area will be further studied. Preliminary analysis shows that installation of this transformer significantly reduces Yuma-area RMR. Preliminary study results show potential savings in energy costs of approximately $1.4 million per year for the years 2003 through 2005. The cost to install a second 500/69kV transformer is estimated to be $3.5 million.

12. All existing Yuma-area transmission and generation resources are necessary to reliably serve the Yuma-area load.

13. In capacity terms, APS will require from 75 MW in 2003 to 91 MW in 2005 of non-APS resources in the Yuma area to serve the APS Yuma-area load. These resources may be supplied from the 75 MW IID steam generator at the Yucca substation, the 53 MW YCA co-generator near the Riverside substation, or future generation/transmission construction in the Yuma area.

14. Removing the transmission constraint could reduce total Yuma-area air emissions by the following average annual amounts for the period 2003-2005.

Table C2
Yuma Area Air Emissions Reduction

Pollutant	Avg. Reduction (tons/year)	Reduction of Yuma Area Emissions (% of total emissions from all sources)
VOC	9.5	Unavailable
NO_x	154	Unavailable
CO	33	Unavailable
PM_{10}	6.5	0.003

15. Removing the import restriction into the Yuma area could reduce the APS Yuma generation capacity factor from 4.4 percent to 0.1 percent.

A

Appendix A

Power Flow Output Results

TABLE OF CONTENT

Page

Phoenix Area
- SIL Nomogram-2003 ..... A1-A17
- SIL Nomogram-2004 ..... A18-A35
- SIL Nomogram-2005 ..... A36-A53

Generation Sensitivities-Inside Phoenix
- Agua Fria A54-A59
- Kyrene A60-A65
- Ocotillo A66-A71
- Santan A72-A77
- W.Phoenix A78-A83

Generation Sensitivities-Outside Phoenix
- Sundance A84-A89
- Desert Basin A90-A95
- Hassayampa A96-A101
- Panda/Gila River A102-A107

Transmission Alternatives
- SVC in Phoenix A108-A113
- Jojoba-Kyrene 500 kV fold-in to Rudd A114-A120

Yuma Area
- SIL Nomogram-2003 ..... A121-A128
- SIL Nomogram-2004 ..... A129-A136
- SIL Nomogram-2005 ..... A137-A144

Transmission Alternatives
- 2nd N. Gila 500/69 kV transformer A145-A162

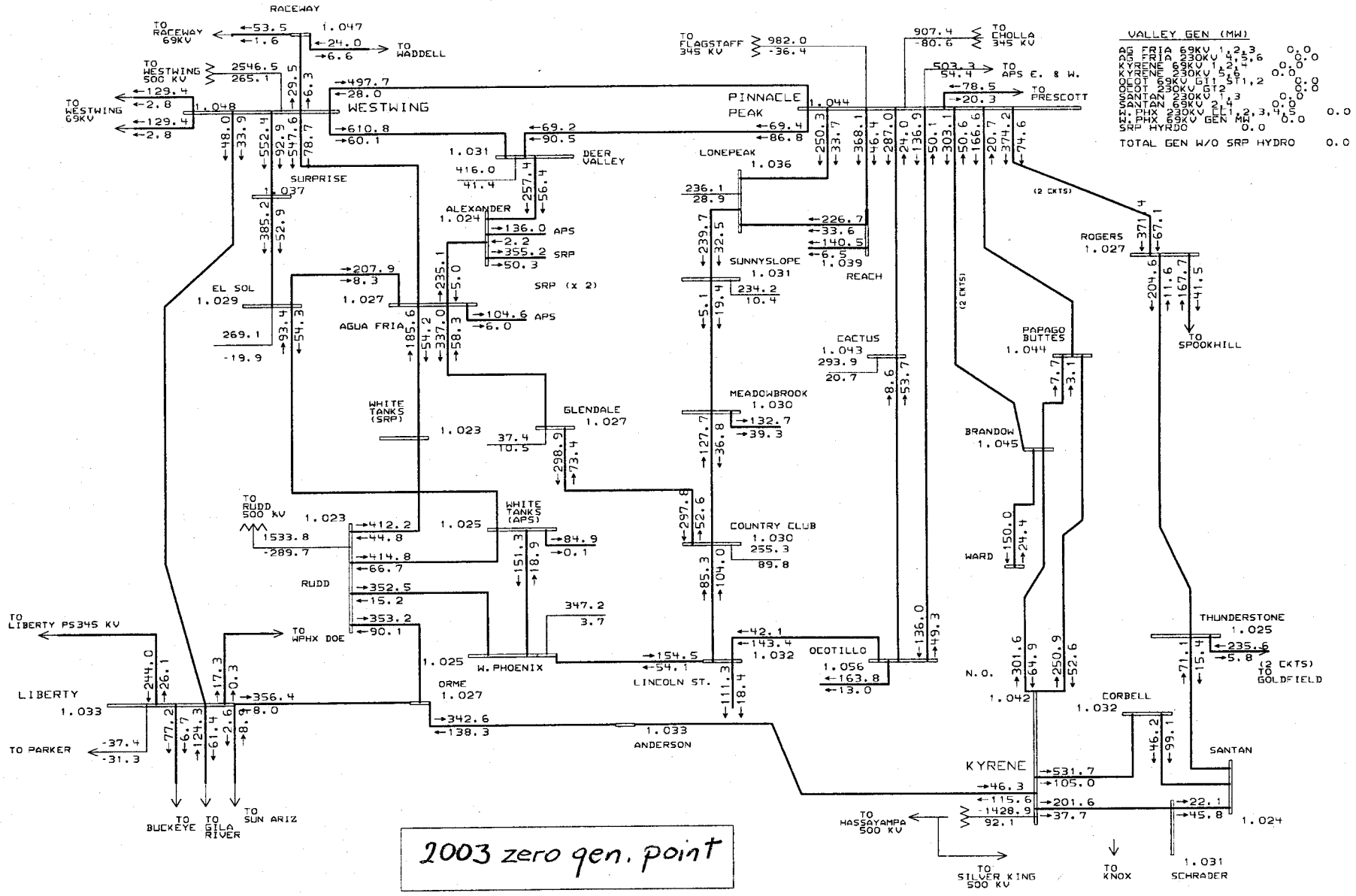

2003 zero gen. point

PHOENIX AREA 230KV SYSTEM

A1

General Electric International, Inc. PSLF Program

Summer 2002 Coordinated Basecase ----- 3/11/2002
Arizona rep from VOP2001 basecase, WSCC Bulk case 2002hs3b
APS Rep updated as of 3/11/02. SRP Rep from VOP2001

2003zero_4200ha_9007mw no var margin
final changes from APS,SRP,WAPA for 2003, .

MW/MVAR Wed Jan 29 14:49:57 2003

c:\upslf131\w-area\met230_03a.
c:\upslf131\w-area\2003zero_42
Rating = 2

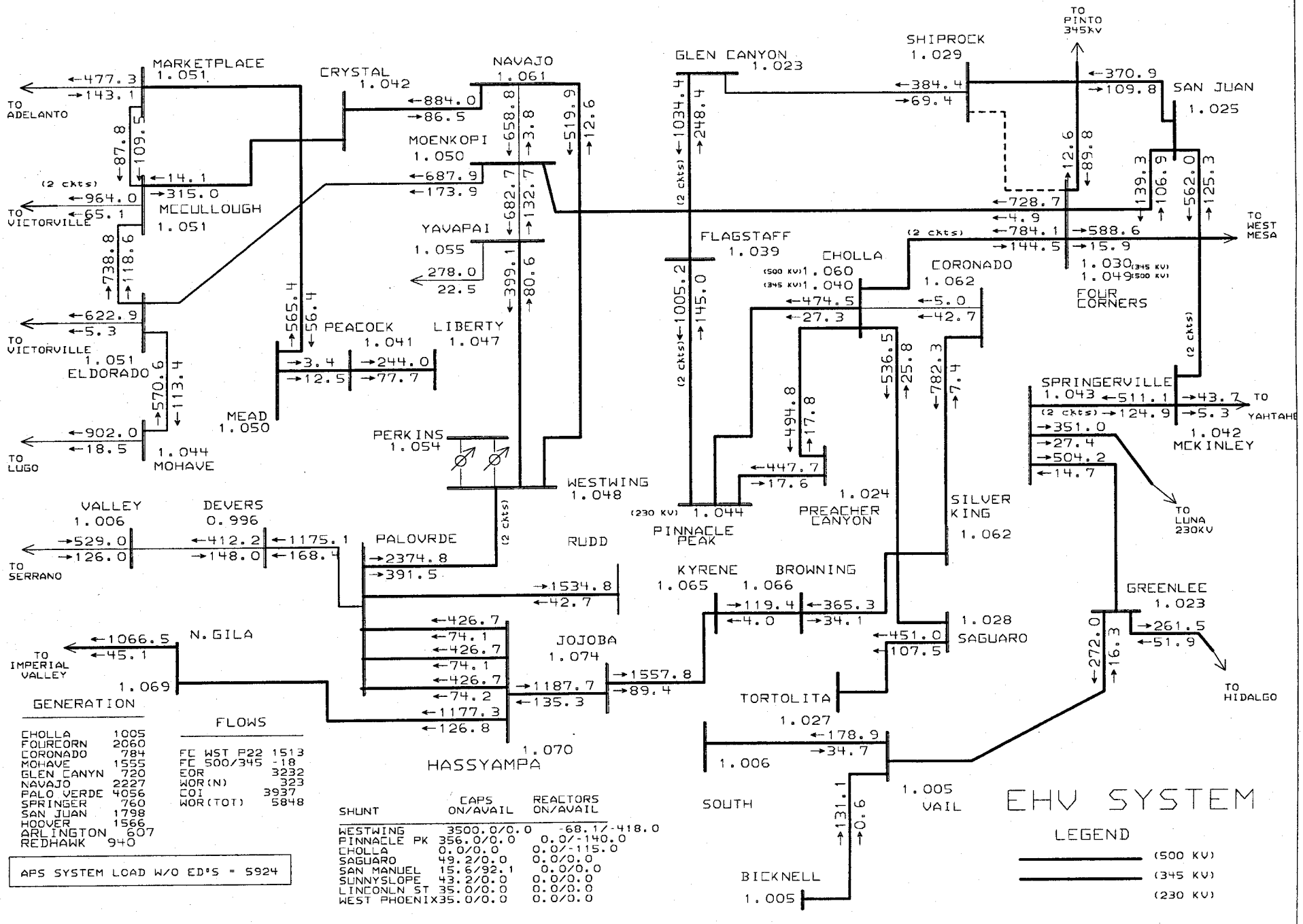

GENERATION

CHOLLA	1005
FOURCORN	2060
CORONADO	784
MOHAVE	1555
GLEN CANYN	720
NAVAJO	2227
PALO VERDE	4056
SPRINGER	760
SAN JUAN	1798
HOOVER	1566
ARLINGTON	607
REDHAWK	940

FLOWS

FC WST P22	1513
FC 500/345	-18
EOR	3232
WOR(N)	323
COI	3937
WOR(TOT)	5848

APS SYSTEM LOAD W/O ED'S = 5924

SHUNT	CAPS ON/AVAIL	REACTORS ON/AVAIL
WESTWING	3500.0/0.0	-68.1/-418.0
PINNACLE PK	356.0/0.0	0.0/-140.0
CHOLLA	0.0/0.0	0.0/-115.0
SAGUARO	49.2/0.0	0.0/0.0
SAN MANUEL	15.6/92.1	0.0/0.0
SUNNYSLOPE	43.2/0.0	0.0/0.0
LINCONLN ST	35.0/0.0	0.0/0.0
WEST PHOENIX	35.0/0.0	0.0/0.0

A2

General Electric International, Inc. PSLF Program

Summer 2002 Coordinated Basecase ----- 3/11/2002
Arizona rep from VOP2001 basecase, WSCC Bulk case 2002hs3b
APS Rep updated as of 3/11/02. SRP Rep from VOP2001

2003zero_4200ha_9007mw no var margin
final changes from APS,SRP,WAPA for 2003, .

c:\upslf131\w-area\ehv03.drw
c:\upslf131\w-area\2003zero_42
Rating = 2

VOLTS	MVAR
0.93	-55.03
0.9275	-55.59
0.925	-55.32

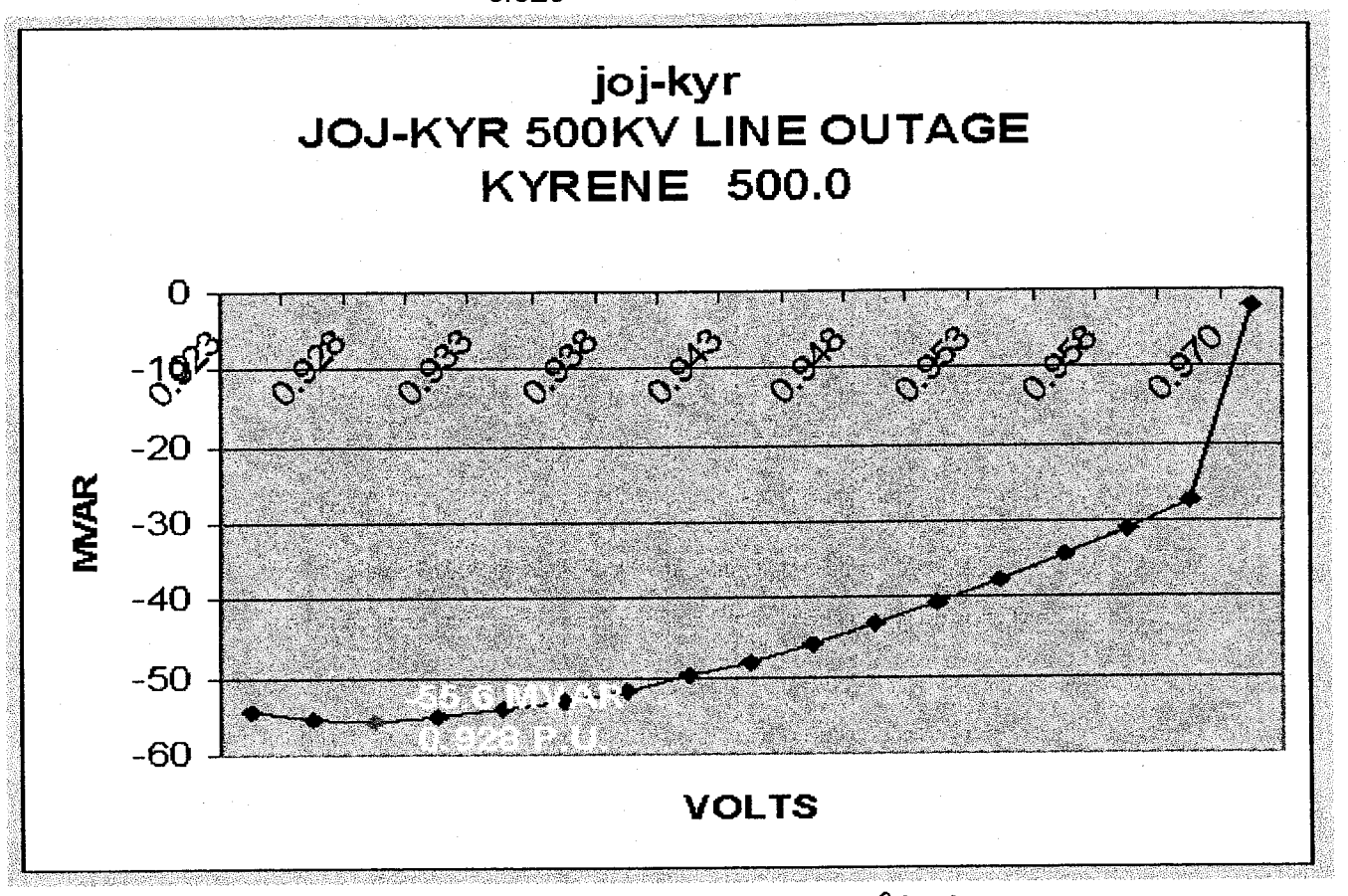

2003 zero gen.

A3

VOLTS	MVAR
0.93	-63.99
0.9275	-64.00
0.925	-62.87

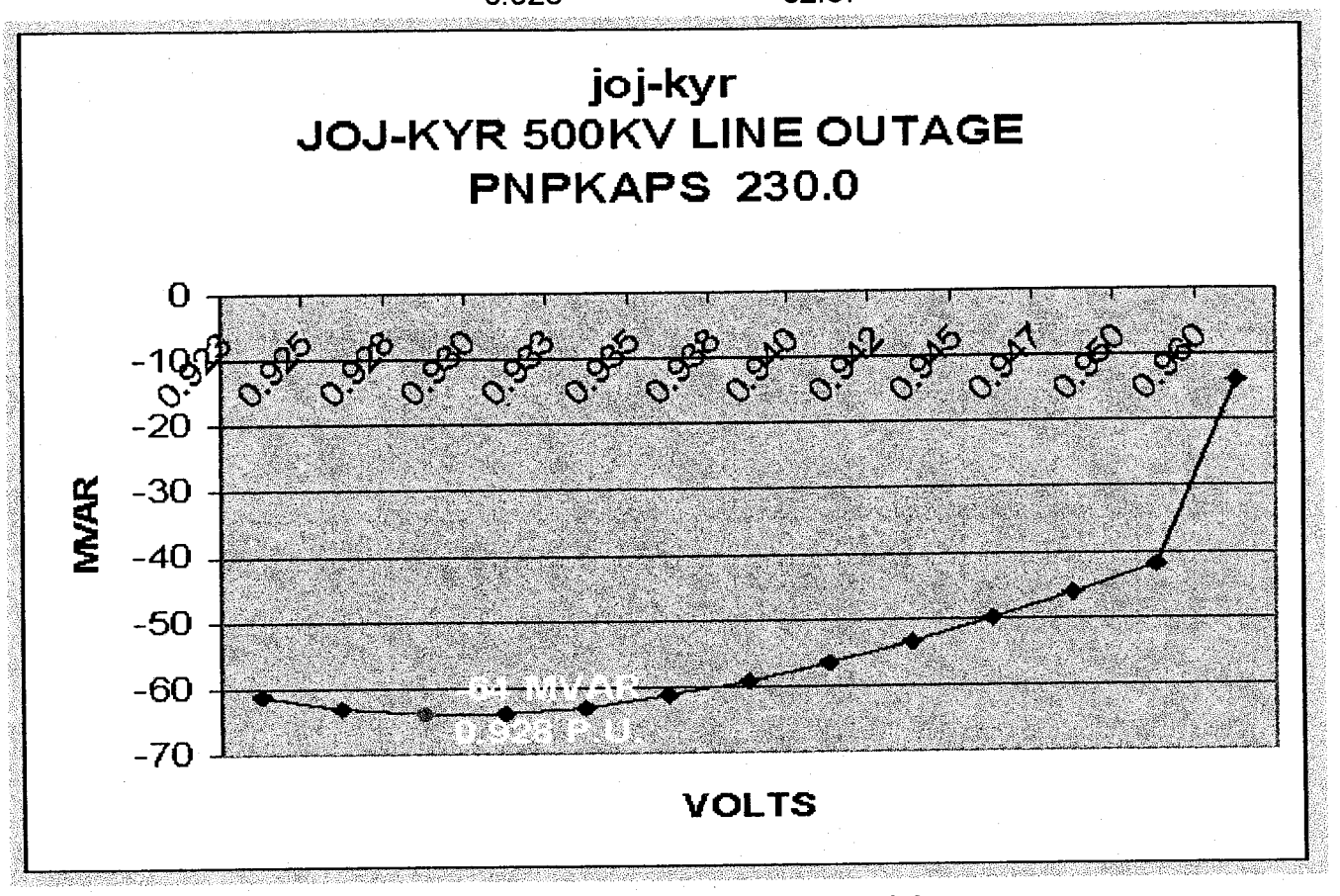

2003 zero gen

A4

VOLTS	MVAR
0.97	-90.58
0.9675	-93.10
0.965	-92.11

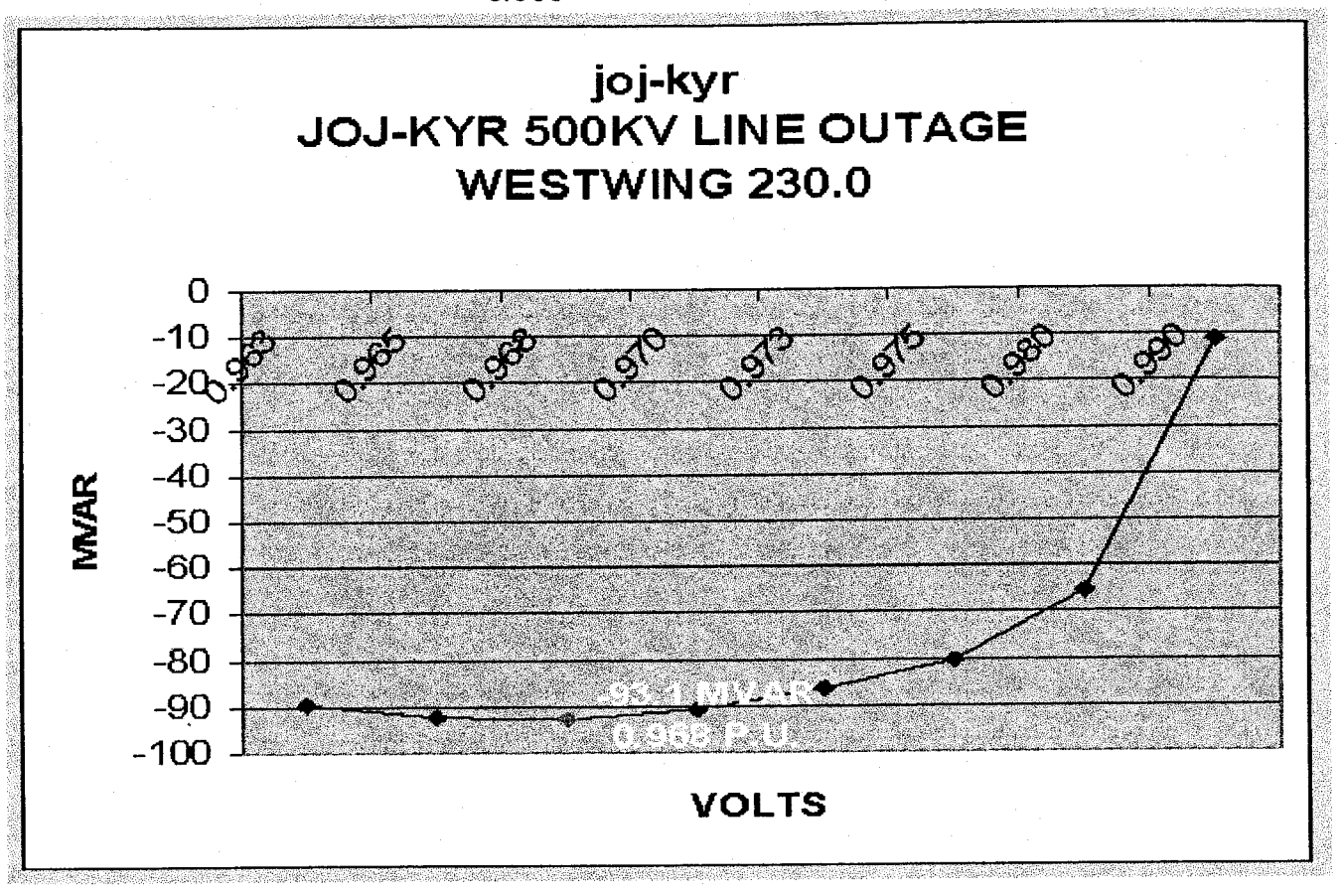

2003 zero gen

A5

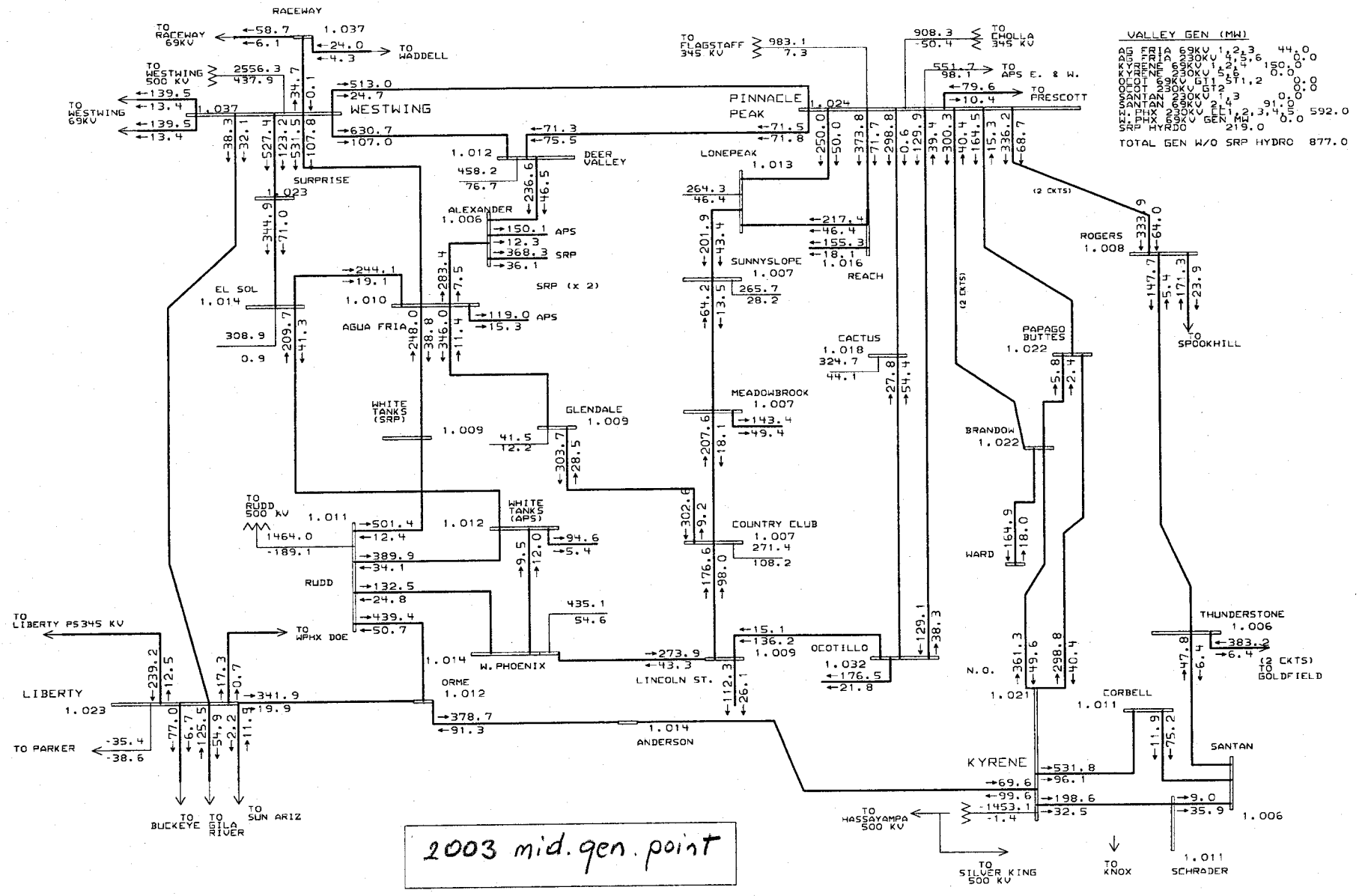

PHOENIX AREA 230KV SYSTEM

A6

General Electric International, Inc. PSLF Program

Summer 2002 Coordinated Basecase ----- 3/11/2002
Arizona rep from VOP2001 basecase, WSCC Bulk case 2002hs3b
APS Rep updated as of 3/11/02. SRP Rep from VOP2001

2003oppoint_4200ha_10005mw no var margin
final changes for APS SRP,WAPA for 2003

MW/MVAR Wed Jan 29 14:56:24 2003

c:\upslf131\w-area\met230_03a.
c:\upslf131\w-area\2003oppoint
Rating = 2

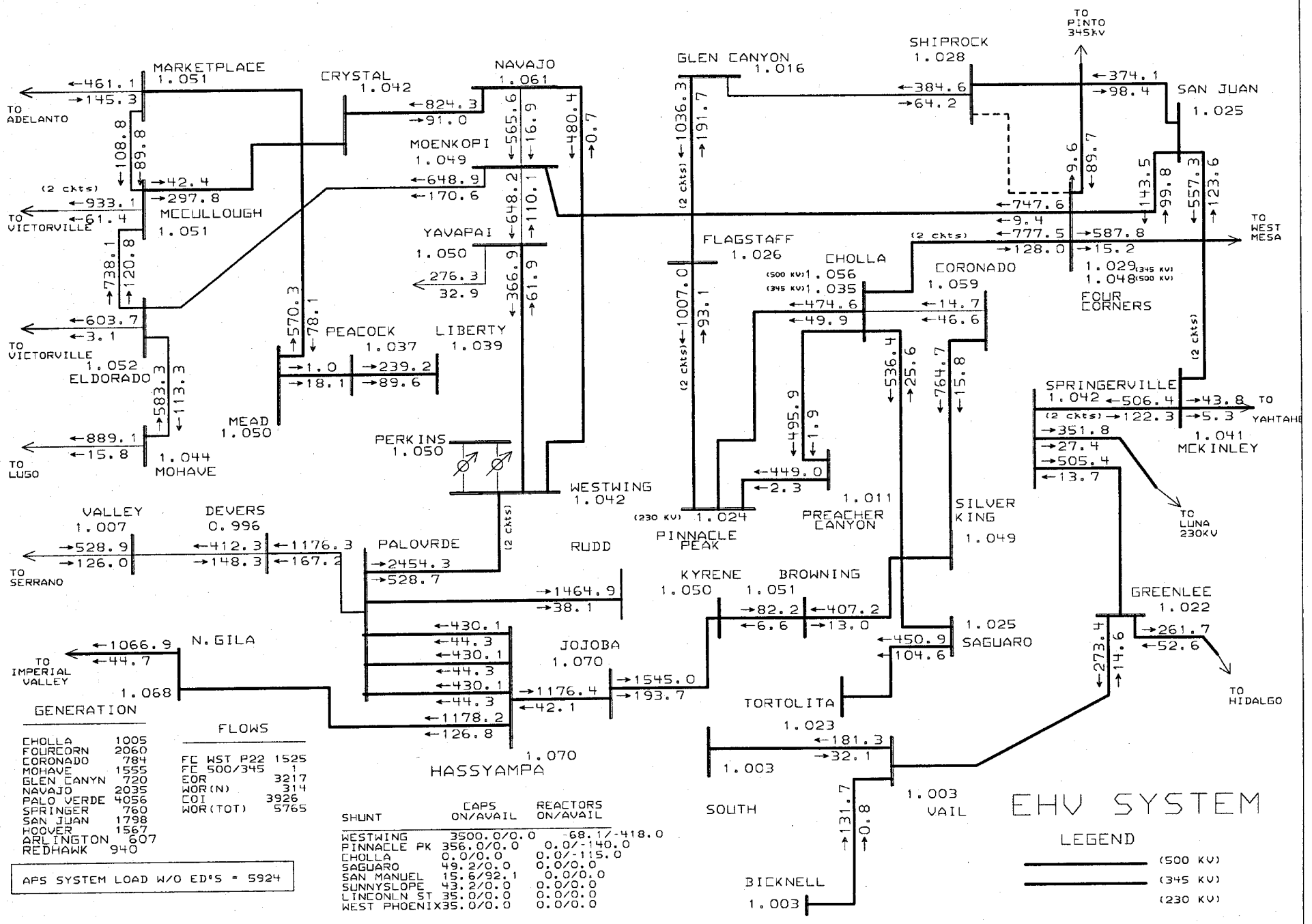

General Electric International, Inc. PSLF Program

Summer 2002 Coordinated Basecase ----- 3/11/2002
Arizona rep from VOP2001 basecase, WSCC Bulk case 2002hs3b
APS Rep updated as of 3/11/02. SRP Rep from VOP2001

2003oppoint_4200ha_10005mw no var margin
final changes for APS SRP,WAPA for 2003

c:\upslf131\w-area\ehv03.drw
c:\upslf131\w-area\2003oppoint
Rating = 2

A7

VOLTS	MVAR
0.9275	-83.29
0.925	-83.42
0.9225	-83.19

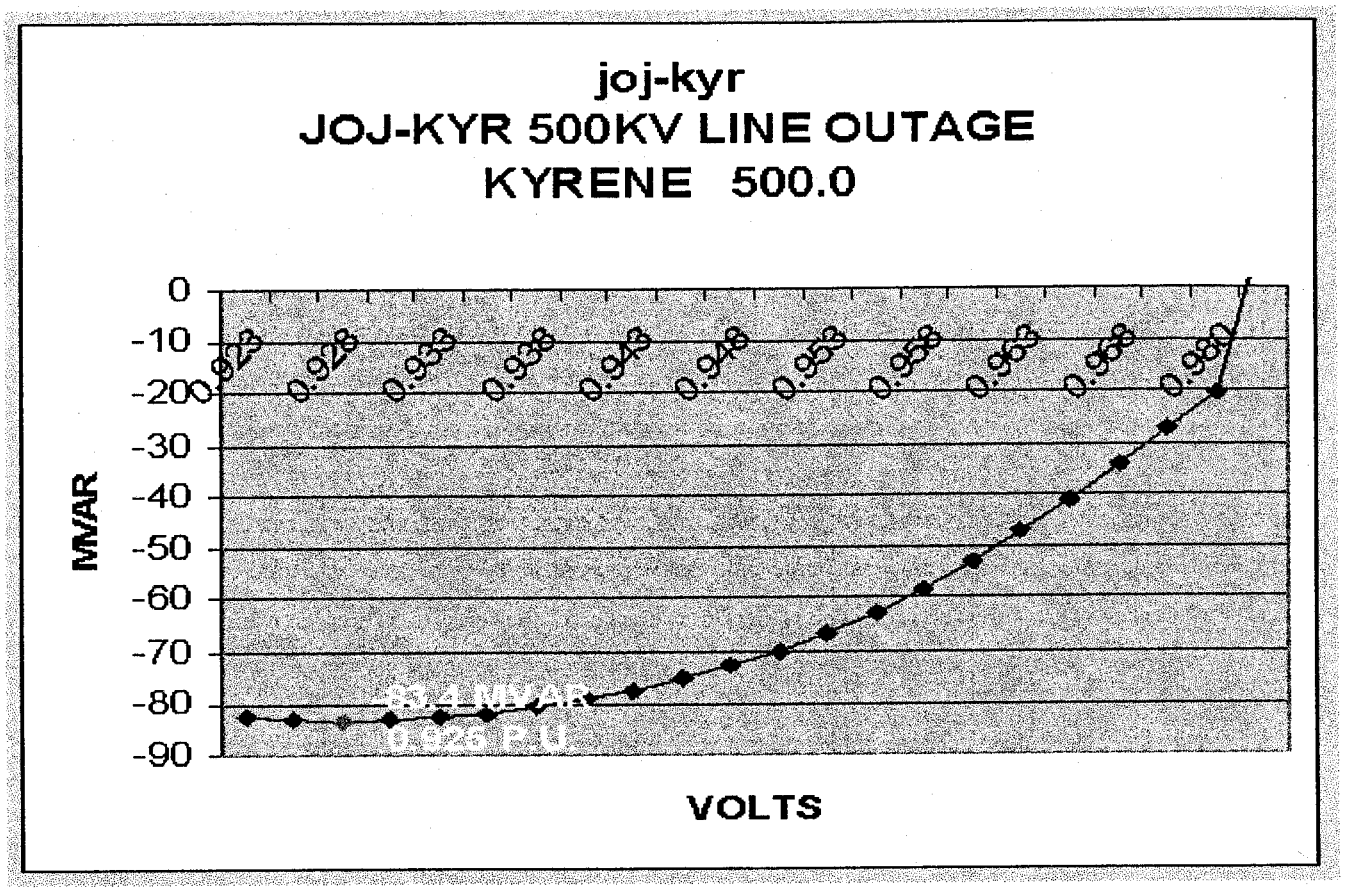

A8

VOLTS	MVAR
0.9075	-83.92
0.905	-84.12
0.9025	-83.90

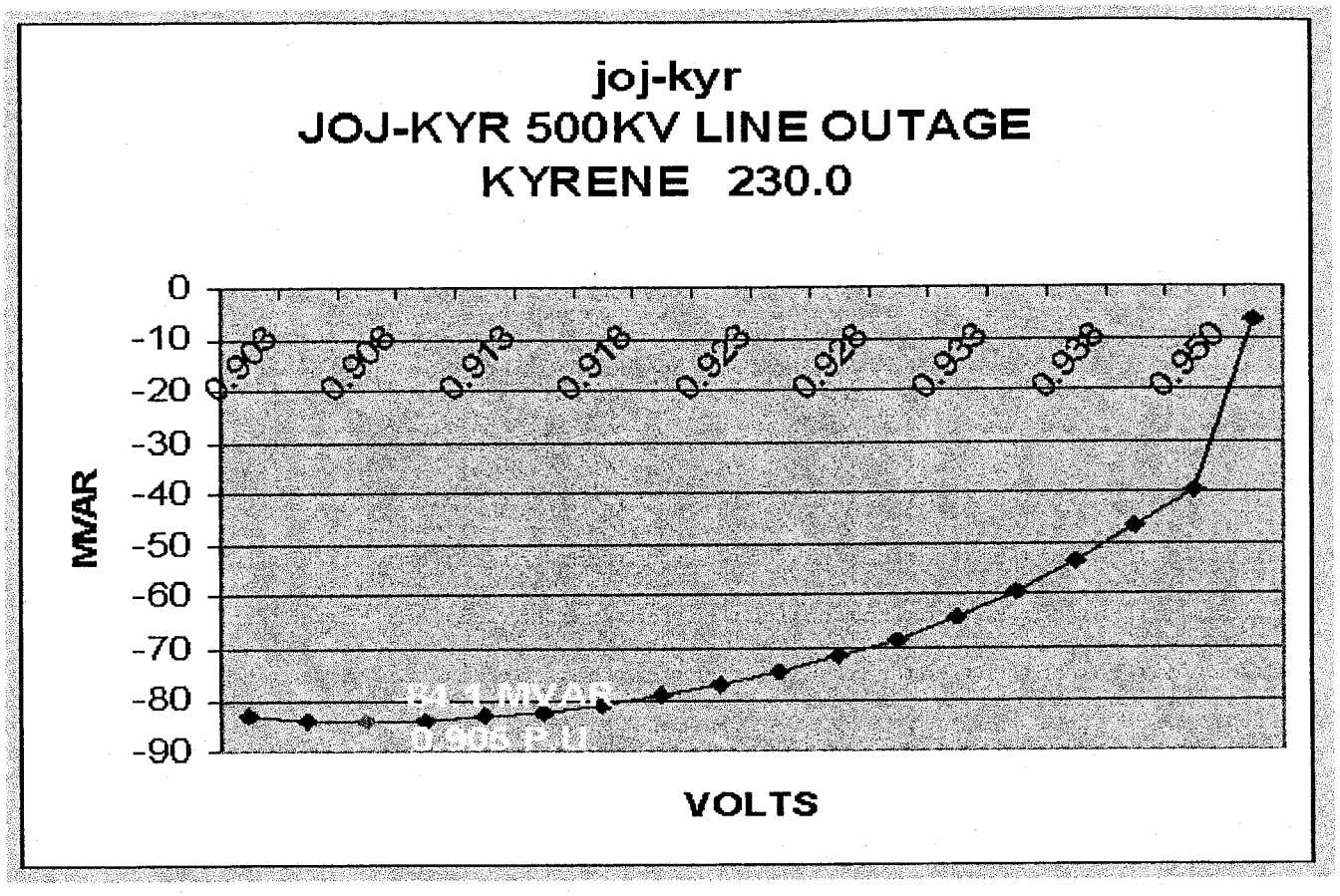

A9

VOLTS	MVAR
0.9225	-92.55
0.92	-92.85
0.9175	-92.64

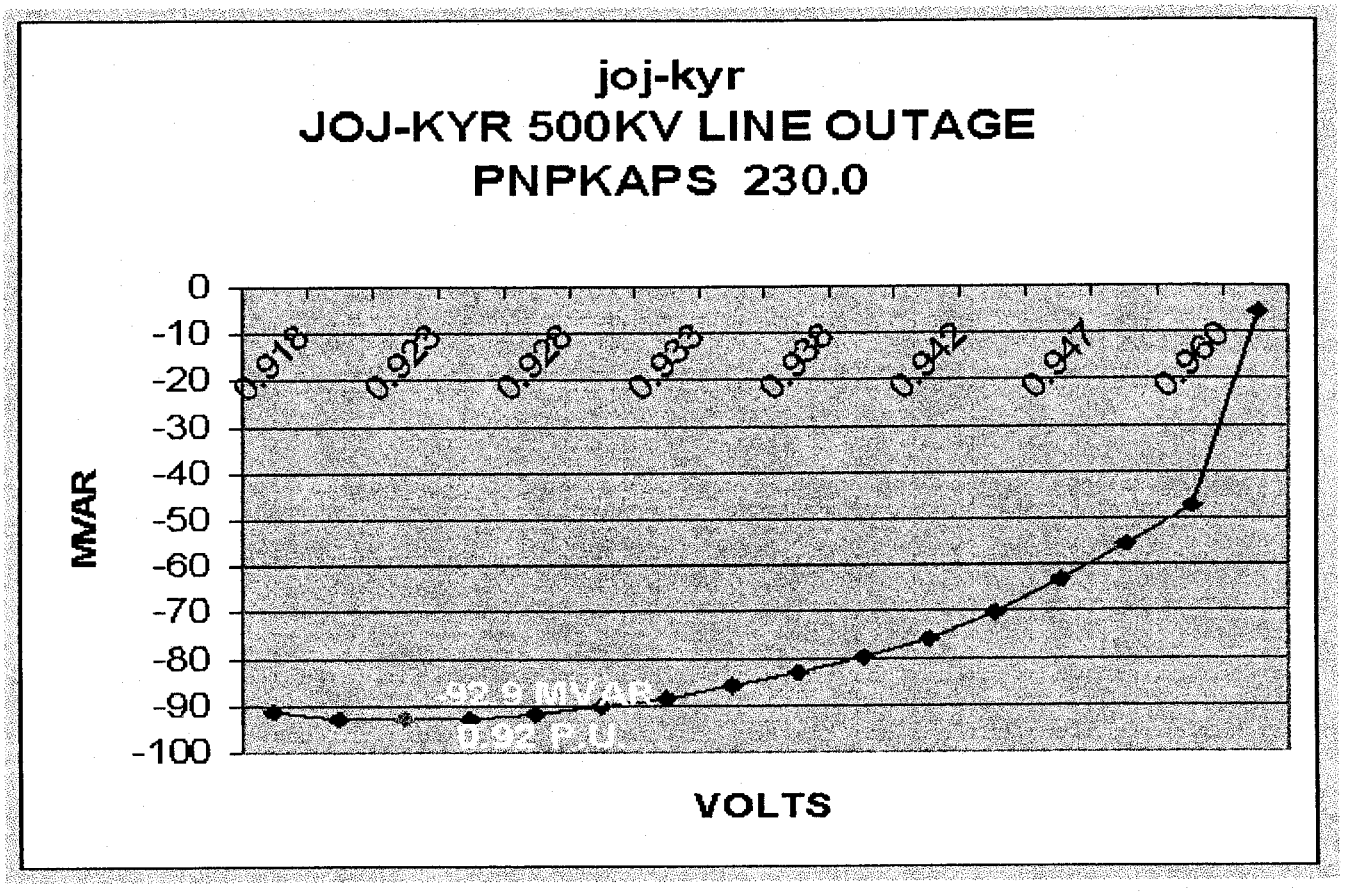

A10

VOLTS	MVAR
0.965	-138.67
0.9625	-139.70
0.96	-137.01

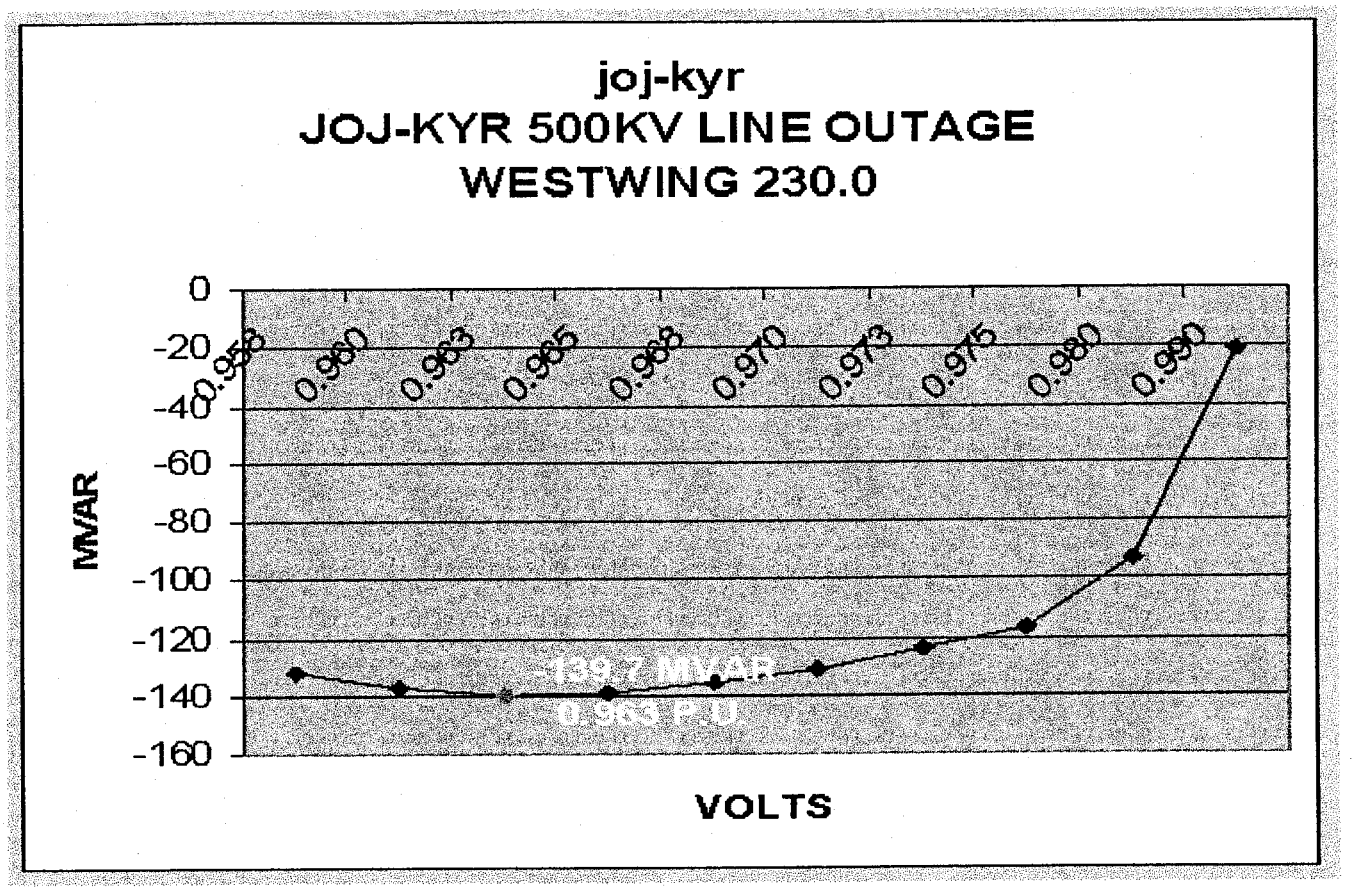

A11

A12

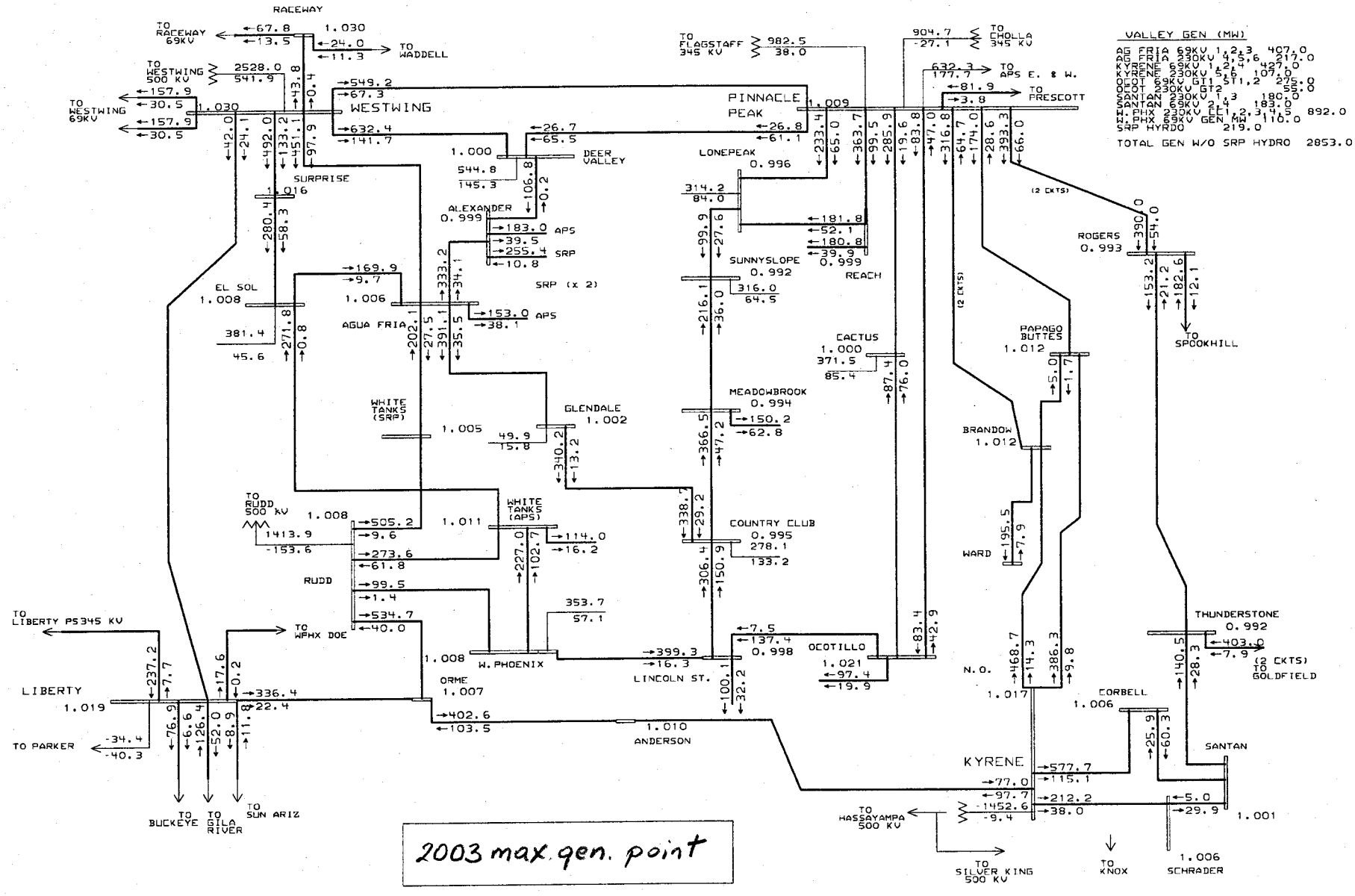

PHOENIX AREA 230KV SYSTEM

General Electric International, Inc. PSLF Program MW/MVAR Wed Jan 29 14:44:19 2003

Summer 2002 Coordinated Basecase ----- 3/11/2002
Arizona rep from VOP2001 basecase, WSCC Bulk case 2002hs3b
APS Rep updated as of 3/11/02. 2003max_4200_12000MW

20003max_4200_12000mw no var margin
maximum point 4 2003, all APS,SRP,WAPA changes in

c:\ups1f131\w-area\met230_03a.
c:\ups1f131\w-area\2003max_420
Rating = 2

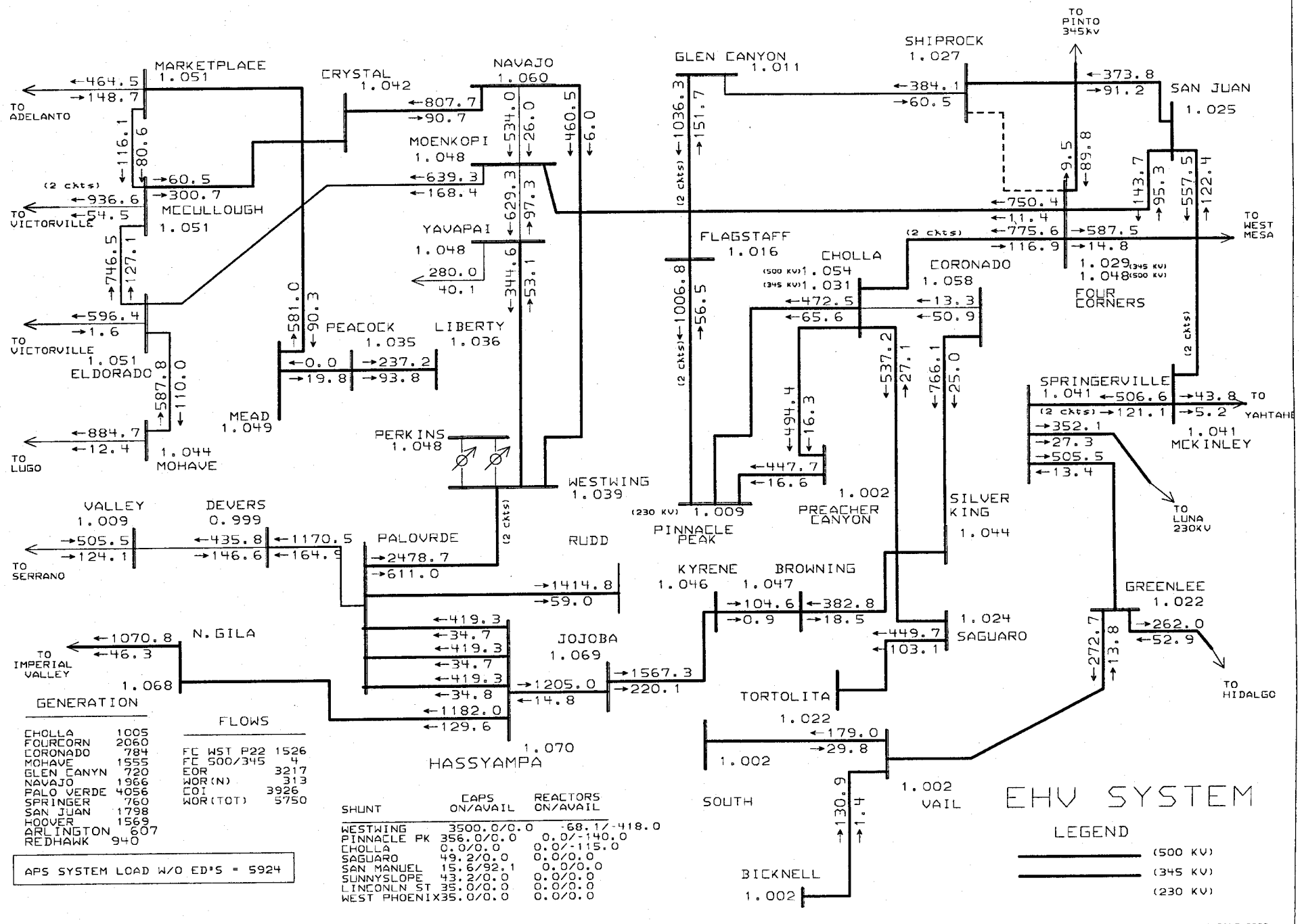
EHV SYSTEM
LEGEND
(500 KV)
(345 KV)
(230 KV)
MARKETPLACE 1.051
CRYSTAL 1.042
NAVAJO 1.060
GLEN CANYON 1.011
SHIPROCK 1.027
SAN JUAN 1.025
TO PINTO 345KV
TO ADELANTO
MOENKOPI 1.048
MCCULLOUGH 1.051
TO VICTORVILLE
YAVAPAI 1.048
FLAGSTAFF 1.016
CHOLLA 1.054 1.031
CORONADO 1.058
FOUR CORNERS 1.029 1.048
TO WEST MESA
TO VICTORVILLE 1.051
ELDORADO
PEACOCK 1.035
LIBERTY 1.036
MEAD 1.049
PERKINS 1.048
WESTWING 1.039
SPRINGERVILLE 1.041
MCKINLEY 1.041
TO YAHTAHE
TO LUGO
1.044 MOHAVE
VALLEY 1.009
DEVERS 0.999
TO SERRANO
PALOVRDE
RUDD
PINNACLE PEAK 1.009
PREACHER CANYON 1.002
SILVER KING 1.044
TO LUNA 230KV
KYRENE 1.046
BROWNING 1.047
GREENLEE 1.022
SAGUARO 1.024
N. GILA 1.068
TO IMPERIAL VALLEY
JOJOBA 1.069
TORTOLITA 1.022
TO HIDALGO
HASSYAMPA 1.070
SOUTH 1.002
VAIL 1.002
BICKNELL 1.002
GENERATION
CHOLLA 1005
FOURCORN 2060
CORONADO 784
MOHAVE 1555
GLEN CANYN 720
NAVAJO 1966
PALO VERDE 4056
SPRINGER 760
SAN JUAN 1798
HOOVER 1569
ARLINGTON 607
REDHAWK 940
FLOWS
FC WST P22 1526
FC 500/345 4
EOR 3217
WOR(N) 313
COI 3926
WOR(TOT) 5750
APS SYSTEM LOAD W/O ED'S = 5924
SHUNT CAPS ON/AVAIL REACTORS ON/AVAIL
WESTWING 3500.0/0.0 -68.1/-418.0
PINNACLE PK 356.0/0.0 0.0/-140.0
CHOLLA 0.0/0.0 0.0/-115.0
SAGUARO 49.2/0.0 0.0/0.0
SAN MANUEL 15.6/92.1 0.0/0.0
SUNNYSLOPE 43.2/0.0 0.0/0.0
LINCONLN ST 35.0/0.0 0.0/0.0
WEST PHOENIX 35.0/0.0 0.0/0.0
MW/MVAR
Wed Jan 29 14:43:47 2003
General Electric International, Inc. PSLF Program
Summer 2002 Coordinated Basecase ----- 3/11/2002
Arizona rep from VOP2001 basecase, WSCC Bulk case 2002hs3b
APS Rep updated as of 3/11/02. 2003max_4200_12000MW
20003max_4200_12000mw no var margin
maximum point 4 2003, all APS,SRP,WAPA changes in
c:\upslf131\w-area\ehv03.drw
c:\upslf131\w-area\2003max_420
Rating = 2

A13

VOLTS	MVAR
0.965	13.42
0.9625	12.01
0.96	12.52

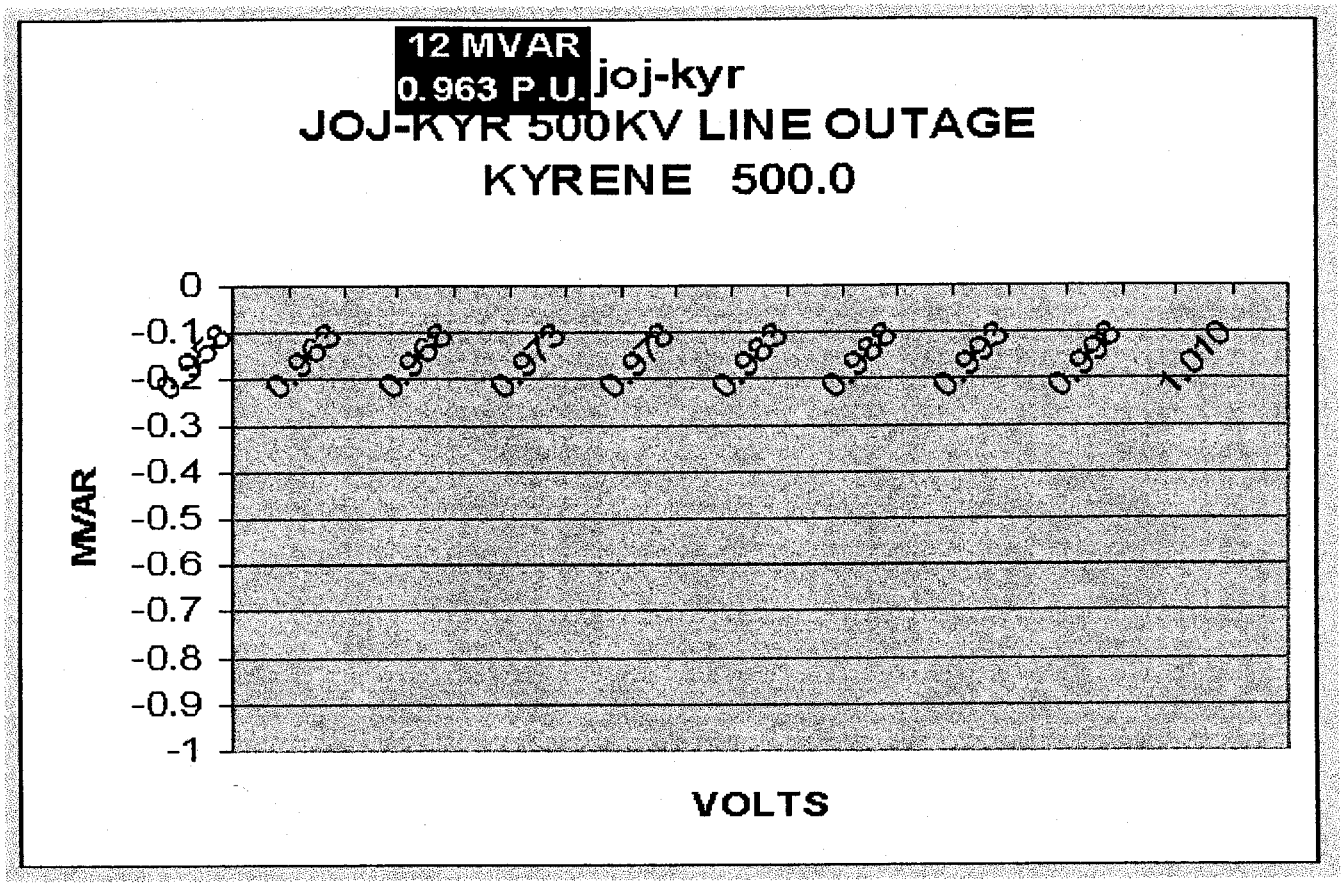

A14

VOLTS	MVAR
0.94	13.60
0.9375	12.07
0.935	12.59

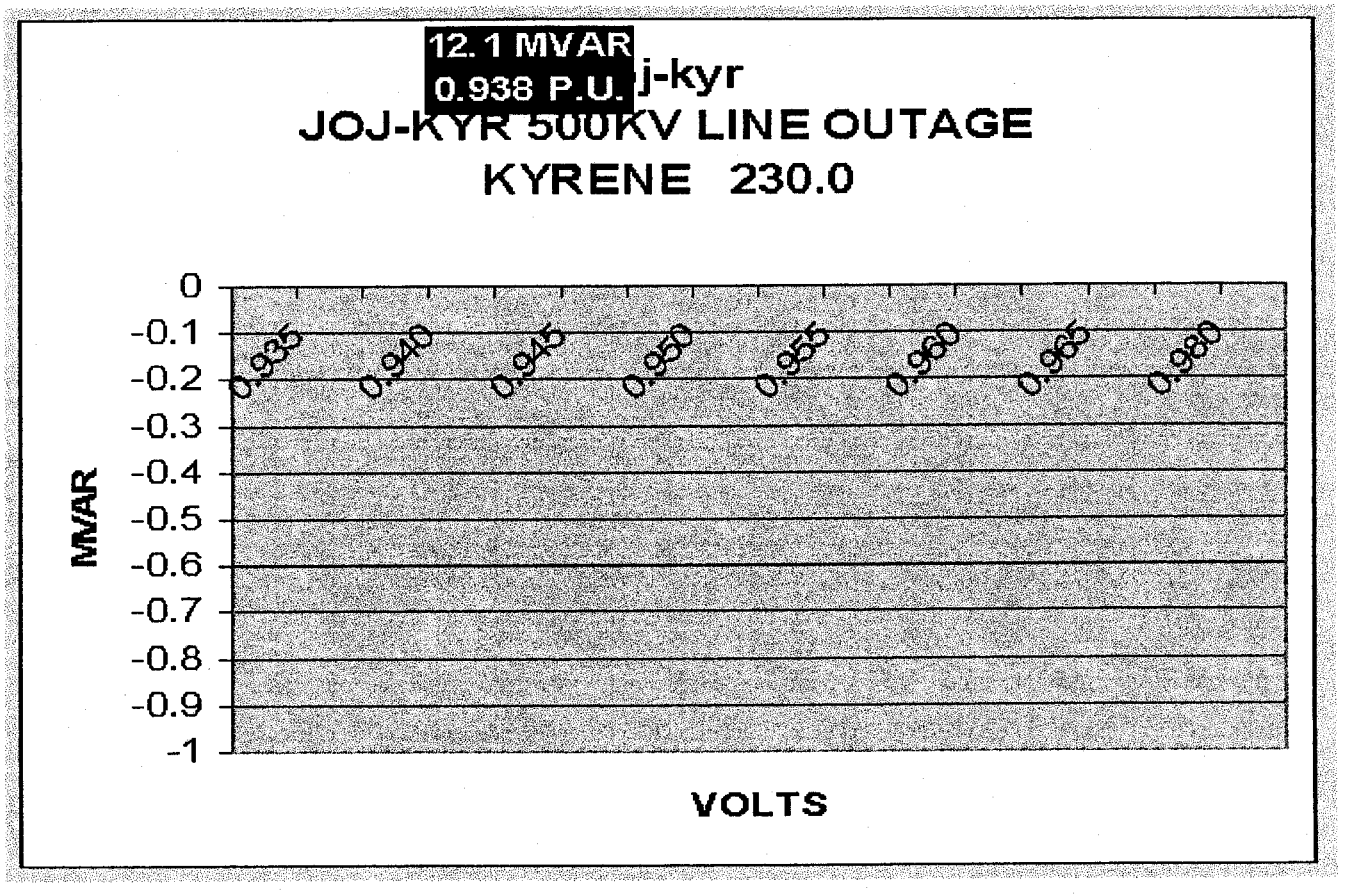

A15

VOLTS	MVAR
0.94	15.32
0.9375	12.62
0.935	12.76

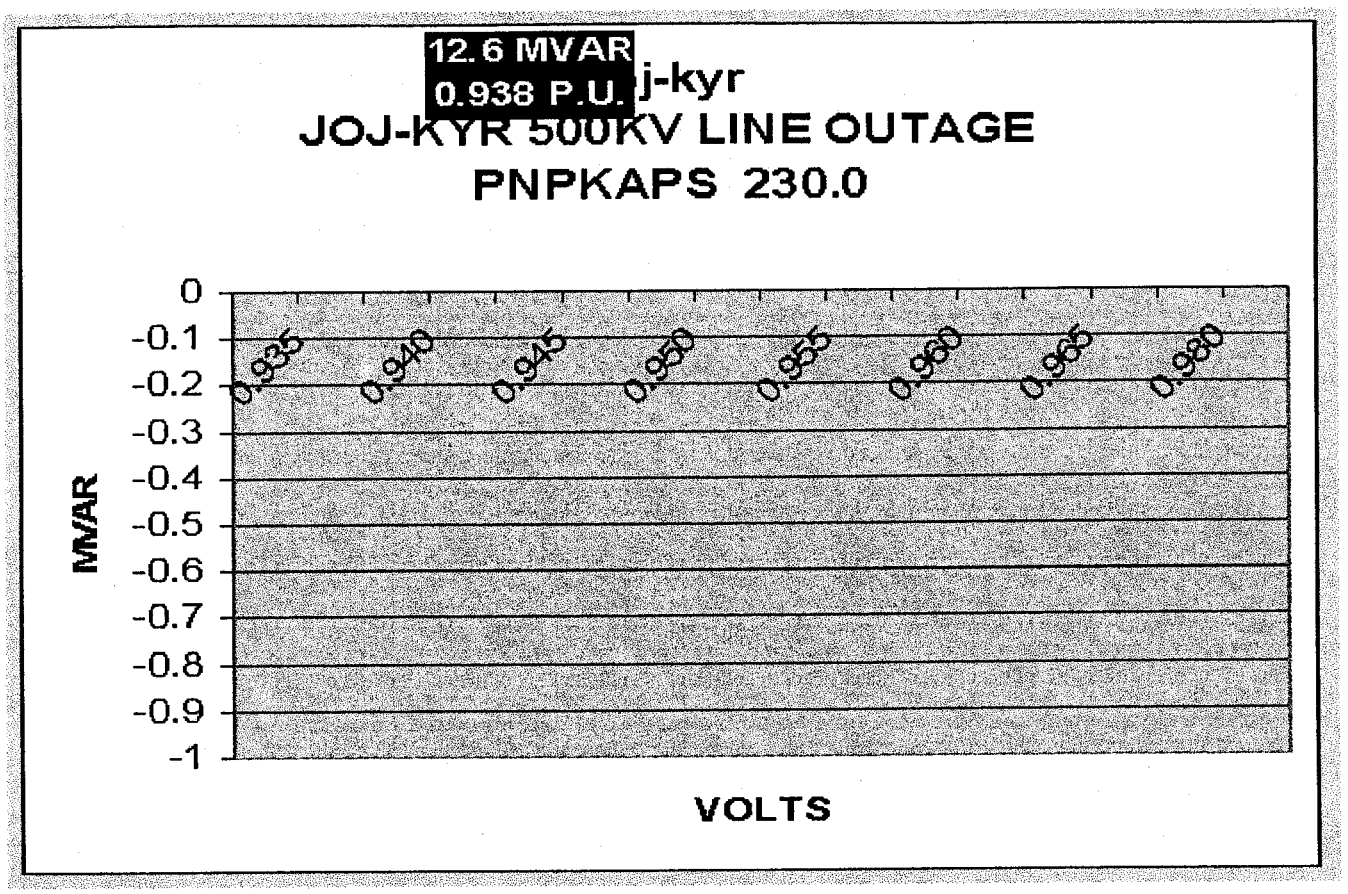

A16

VOLTS	MVAR
0.9825	25.40
0.98	19.03
0.9775	20.07

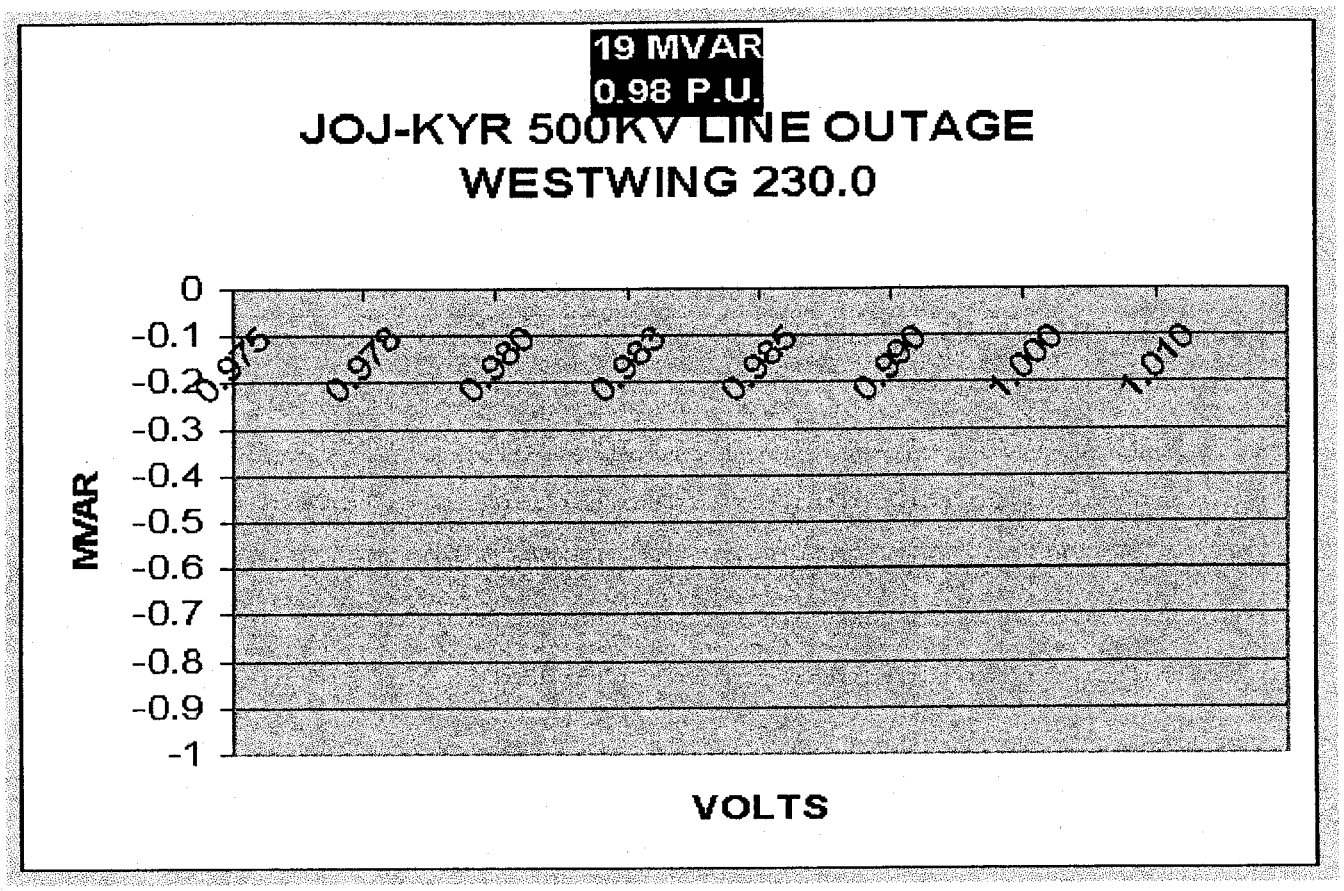

A17

A18

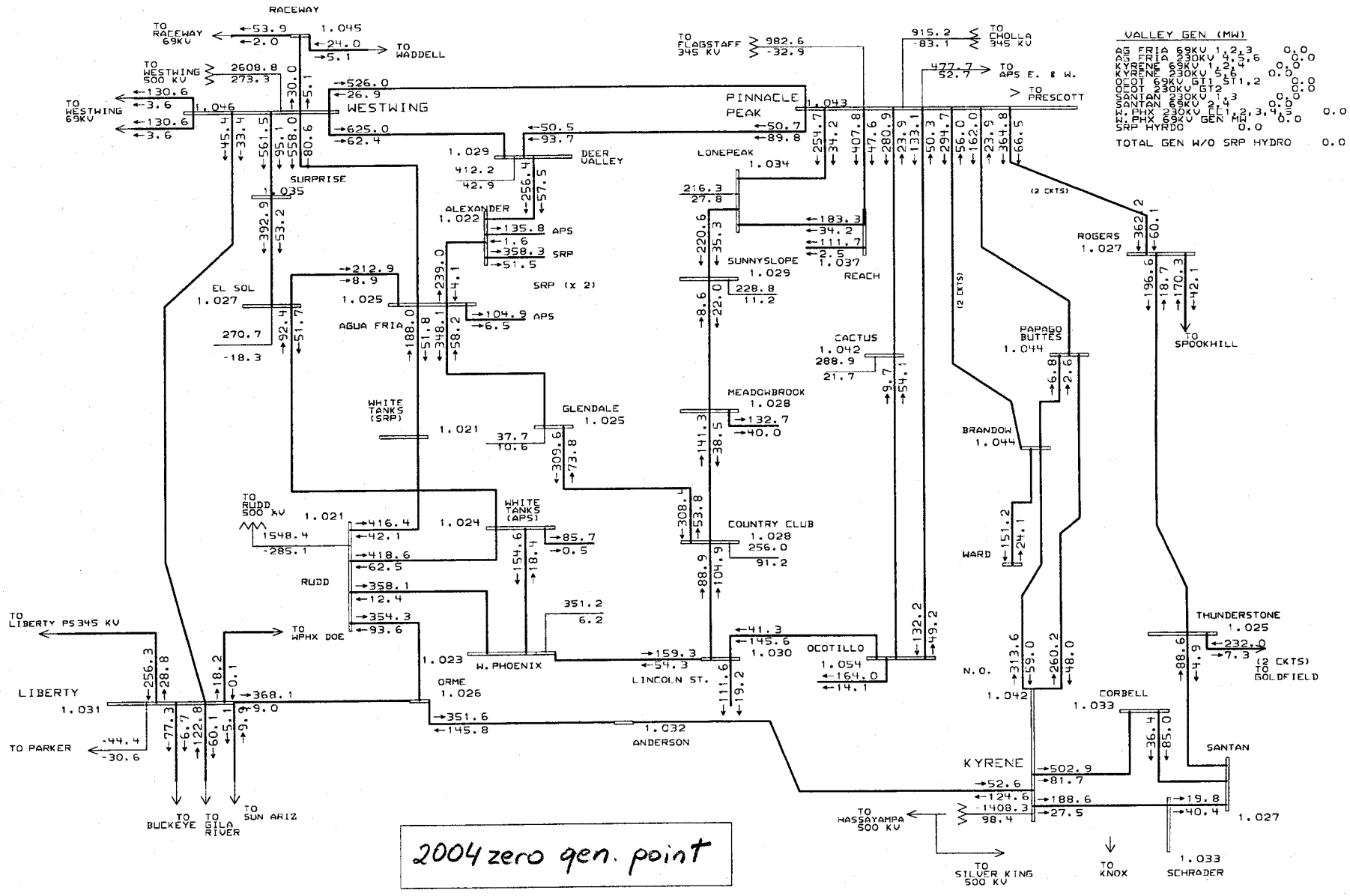

2004 zero gen. point

PHOENIX AREA 230KV SYSTEM

General Electric International, Inc. PSLF Program MW/MVAR Wed Jan 29 15:04:39 2003

Summer 2002 Coordinated Basecase ----- 3/11/2002
Arizona rep from VOP2001 basecase, WSCC Bulk case 2002hs3b
APS Rep updated as of 3/11/02. SRP Rep from VOP2001

2004zero_4200haa_9084 no var margin
final changes from APS,SRP,WAPA for 2004,

c:\upslf131\w-area\met230_03a.
c:\upslf131\w-area\2004zero_42
Rating = 2

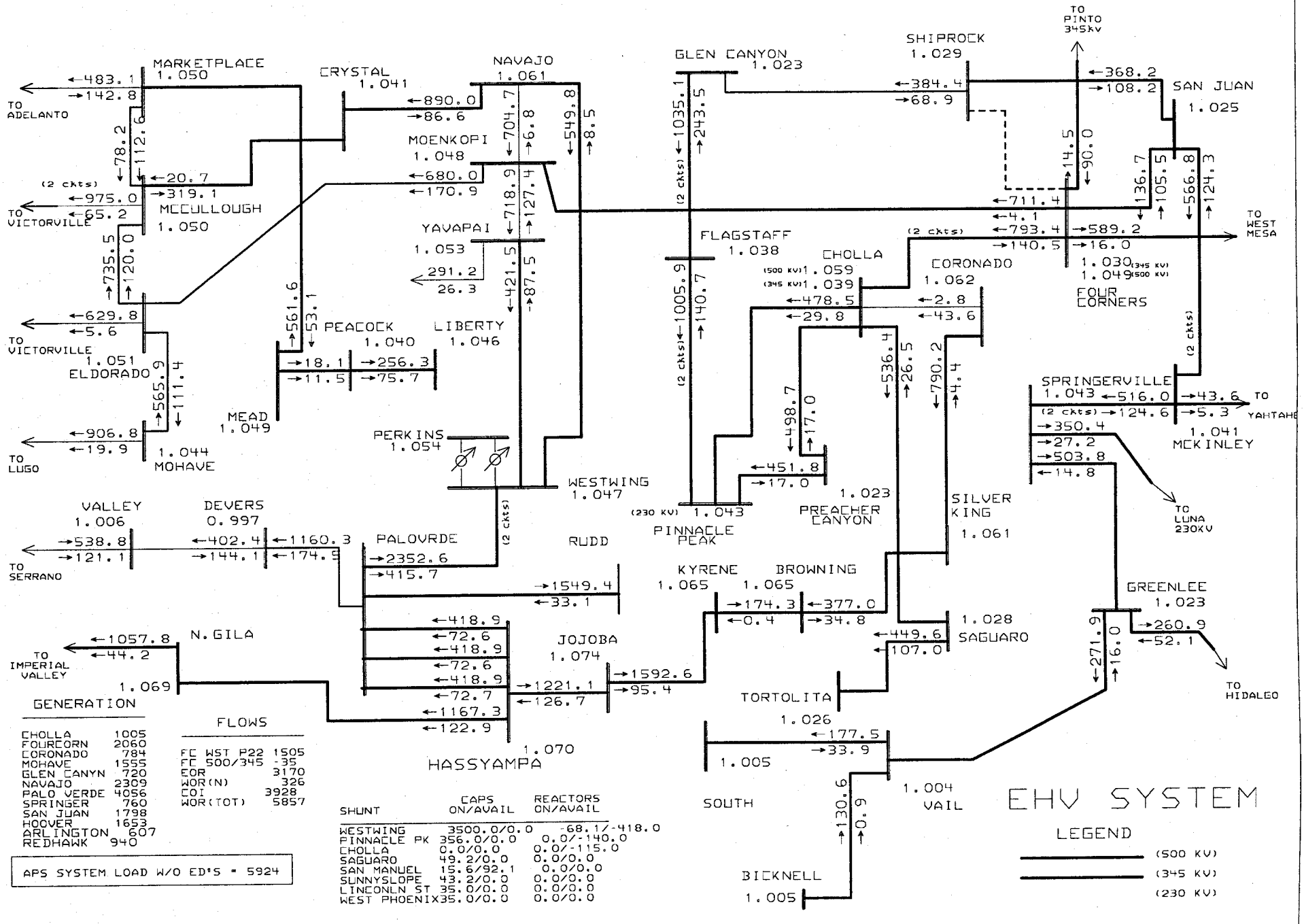

General Electric International, Inc. PSLF Program

Summer 2002 Coordinated Basecase ----- 3/11/2002
Arizona rep from VOP2001 basecase, WSCC Bulk case 2002hs3b
APS Rep updated as of 3/11/02. SRP Rep from VOP2001

2004zero_4200haa_9084 no var margin
final changes from APS,SRP,WAPA for 2004,

c:\upslf131\w-area\ehv03.drw
c:\upslf131\w-area\2004zero_42
Rating = 2

VOLTS	MVAR
0.935	-22.97
0.9325	-23.16
0.93	-23.03

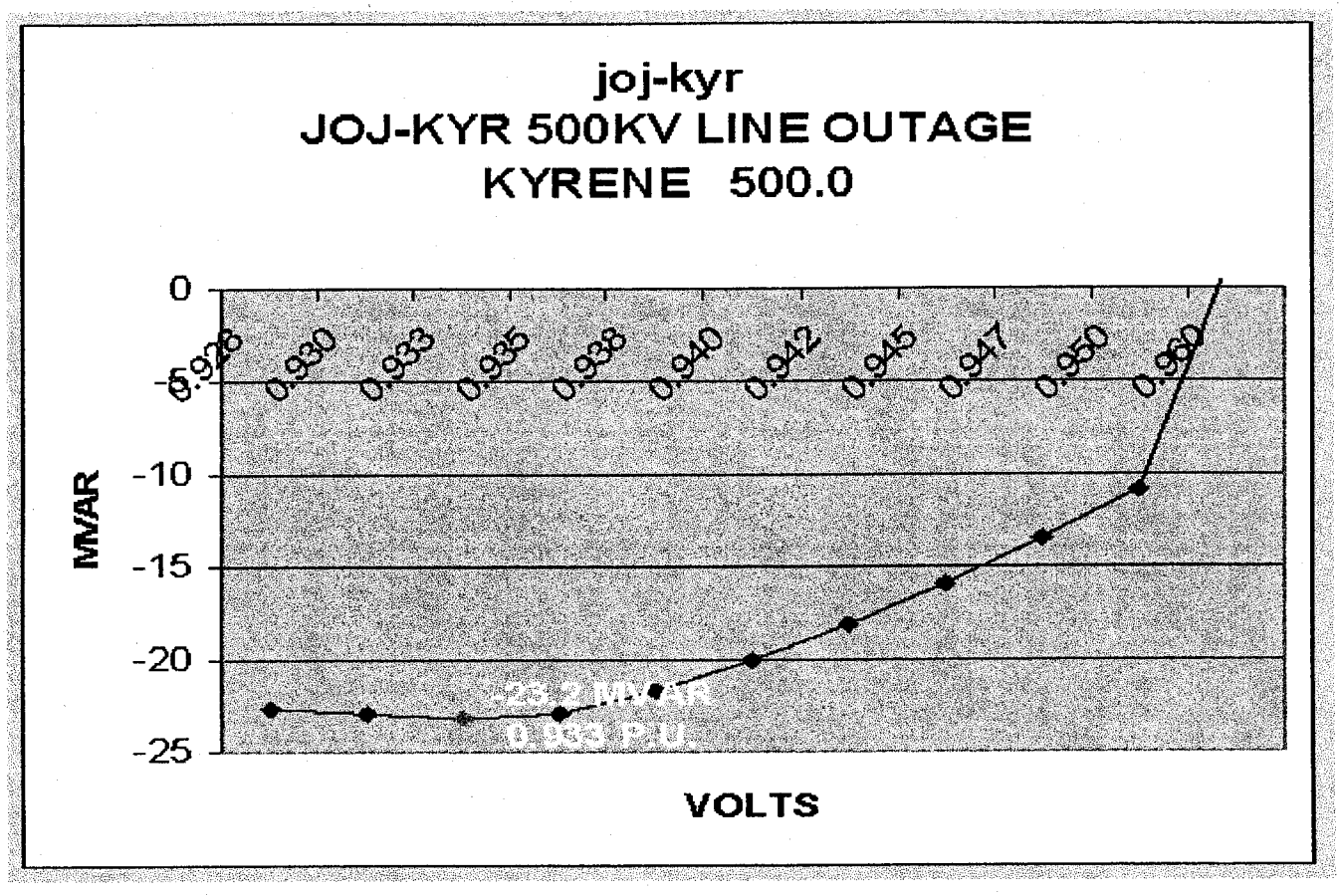

A20

VOLTS	MVAR
0.9125	-23.14
0.91	-23.23
0.9075	-22.98

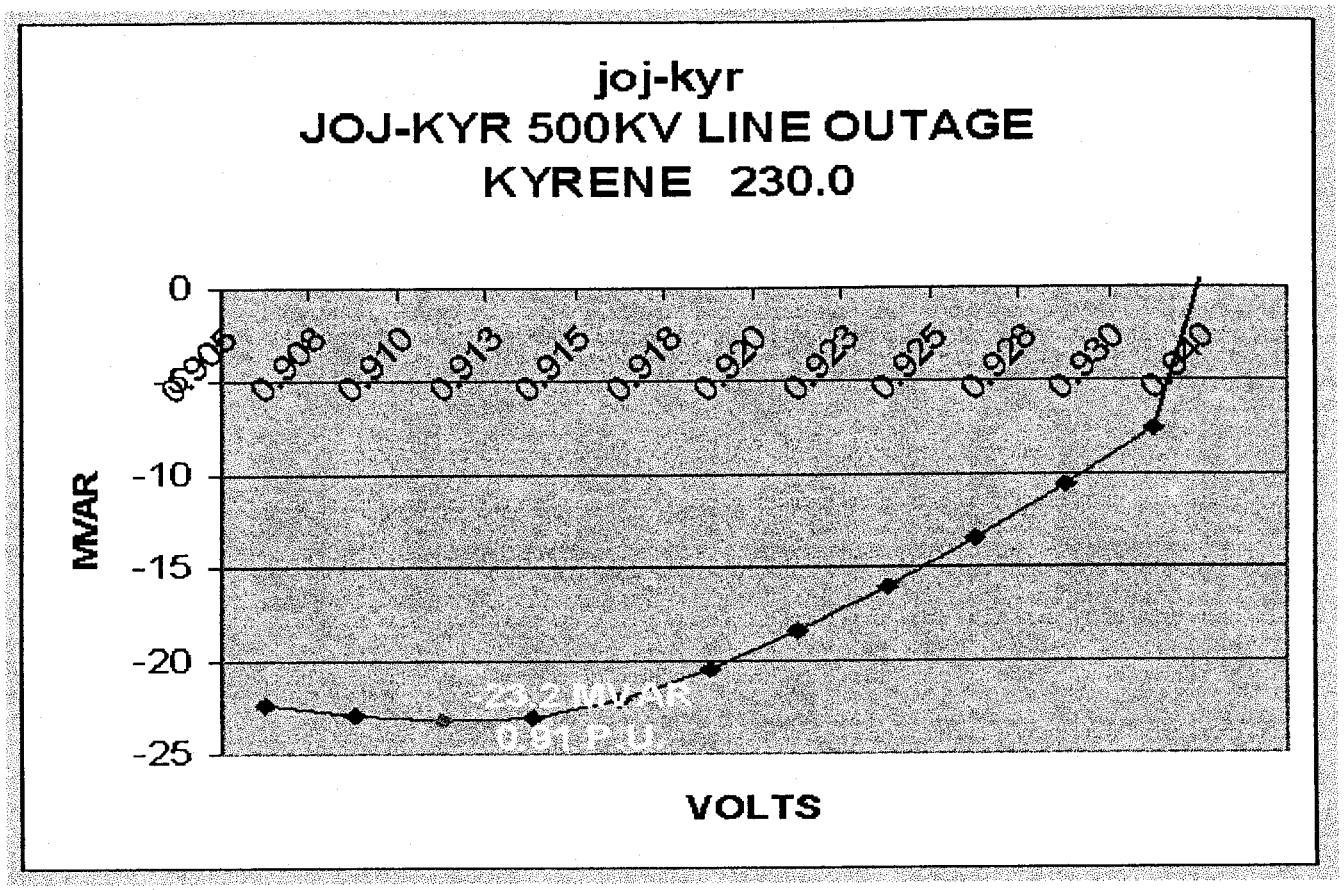

A21

VOLTS	MVAR
0.9325	-25.13
0.93	-26.00
0.9275	-26.00

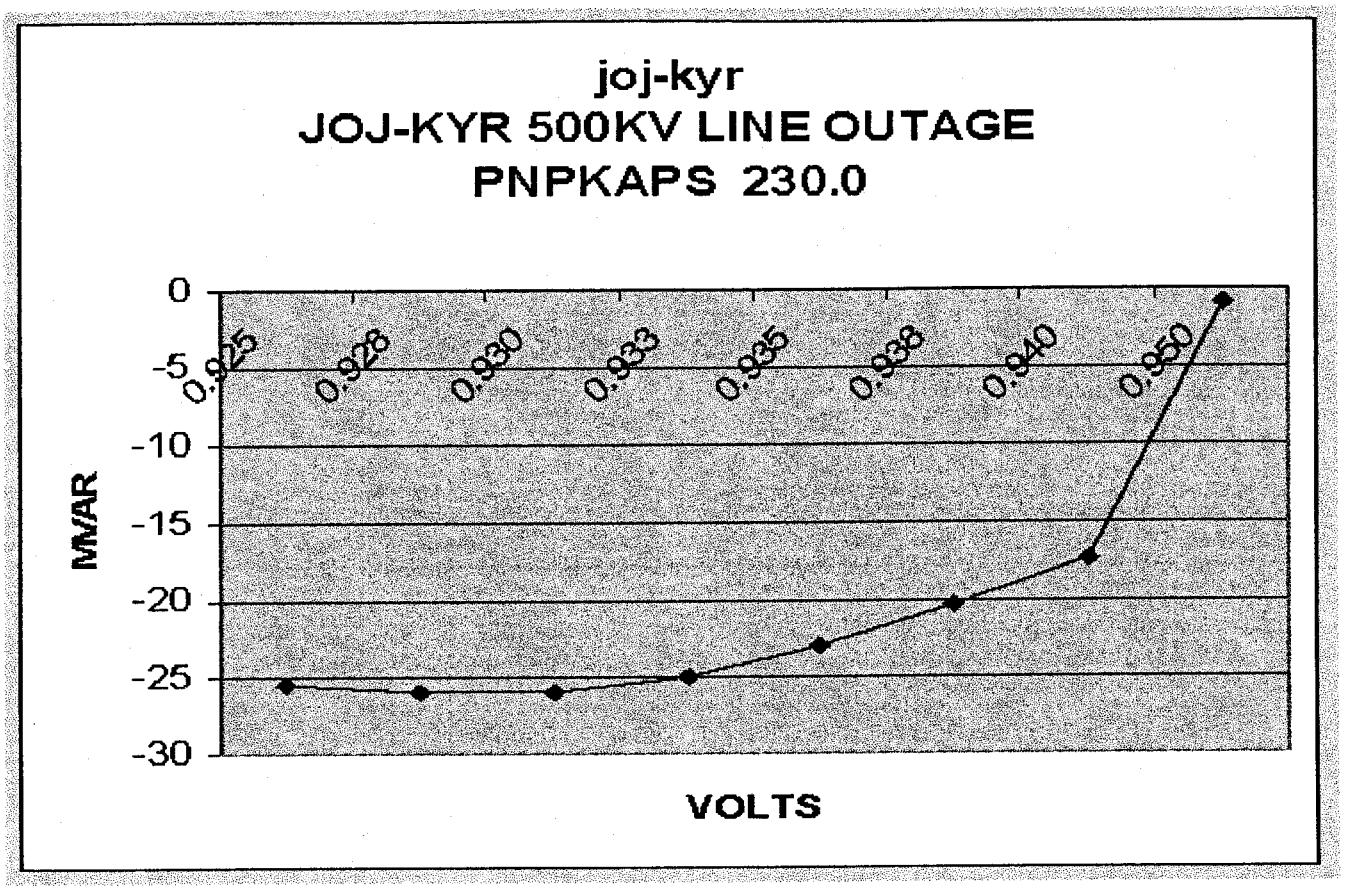

A22

VOLTS	MVAR
0.9675	-36.87
0.965	-37.12
0.9625	-35.92

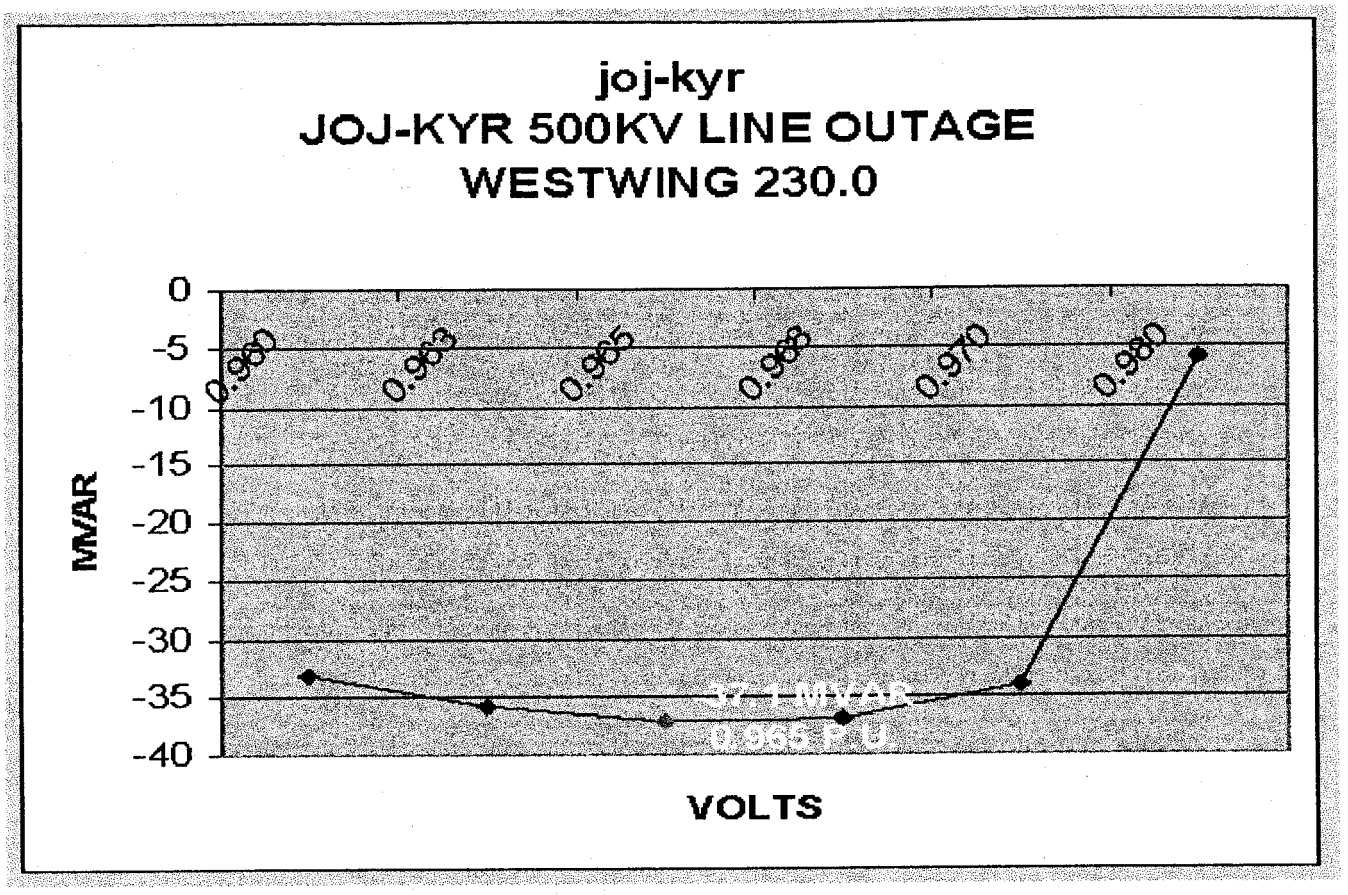

A23

A24

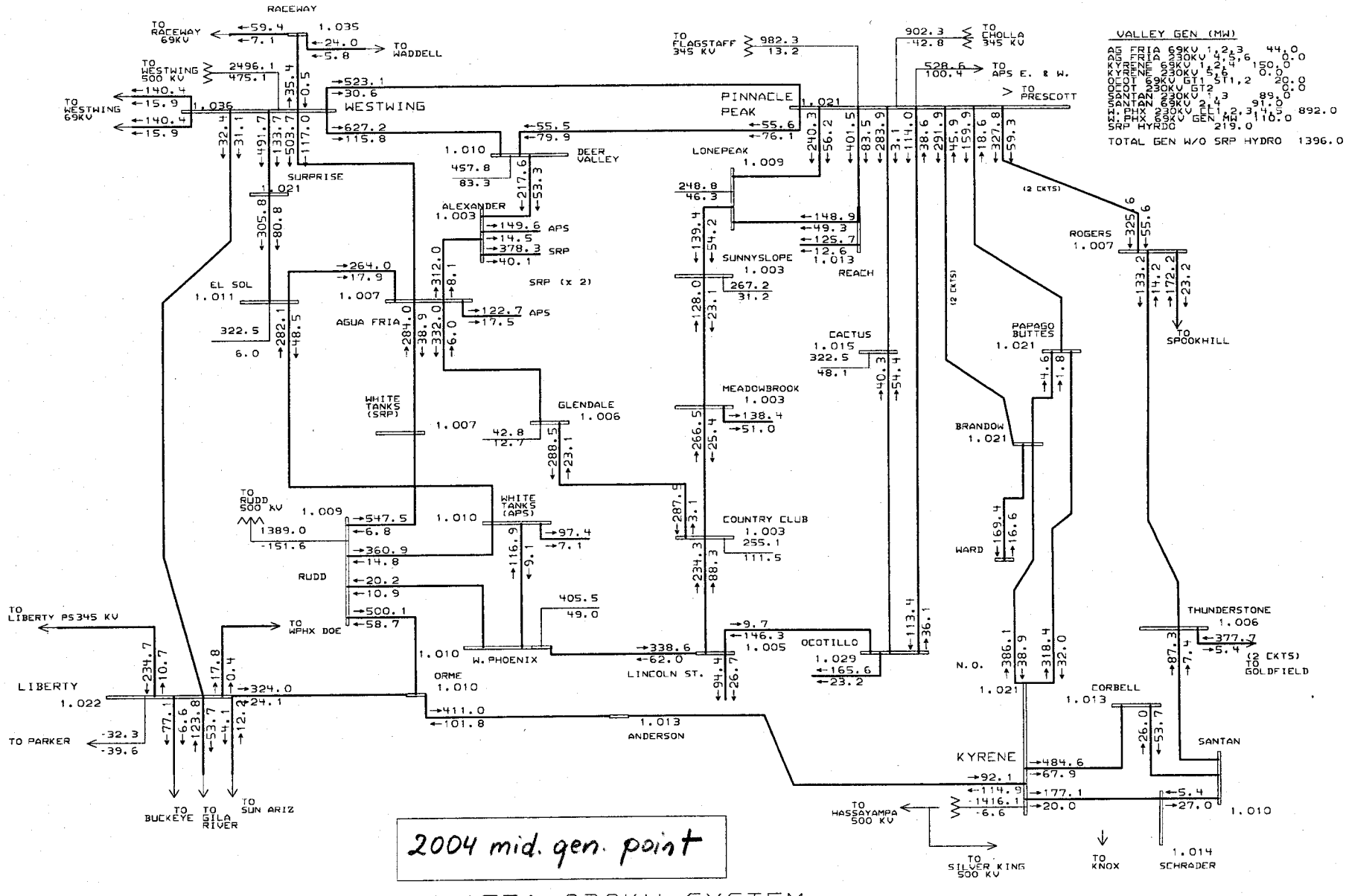

PHOENIX AREA 230KV SYSTEM

General Electric International, Inc. PSLF Program

MW/MVAR Wed Jan 29 15:08:58 2003

Summer 2002 Coordinated Basecase ----- 3/11/2002
Arizona rep from VOP2001 basecase, WSCC Bulk case 2002hs3b
APS Rep updated as of 3/11/02. SRP Rep from VOP2001

2004oppoint_4200haa_10300mw no var margin
final changes from APS, SRP, WAPA for 2004,

c:\upslf131\w-area\met230_03a.
c:\upslf131\w-area\2004oppoint
Rating = 2

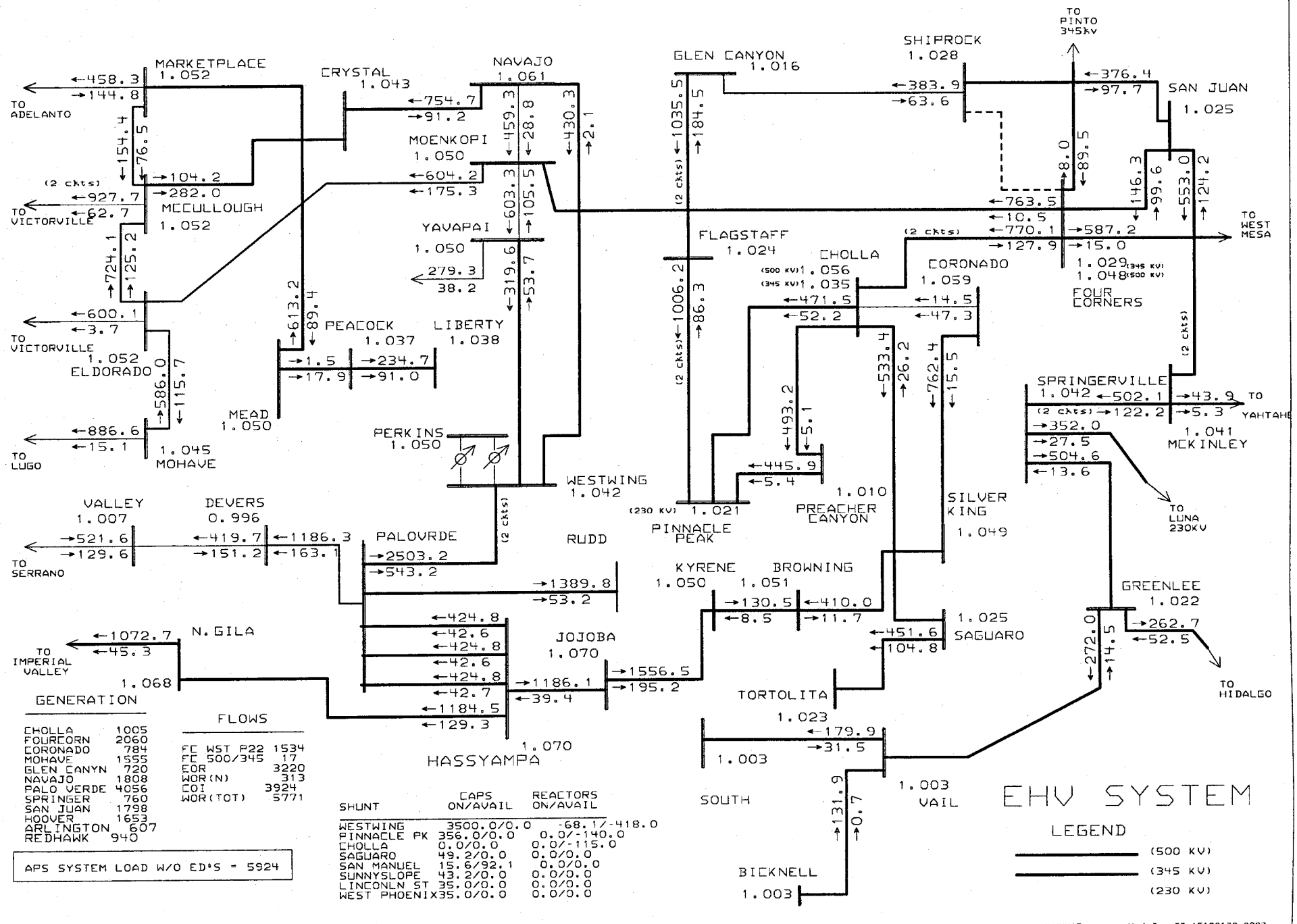

A25

GENERATION

CHOLLA	1005
FOURCORN	2060
CORONADO	784
MOHAVE	1555
GLEN CANYN	720
NAVAJO	1808
PALO VERDE	4056
SPRINGER	760
SAN JUAN	1798
HOOVER	1653
ARLINGTON	607
REDHAWK	940

FLOWS

FC WST P22	1534
FC 500/345	17
EOR	3220
WOR(N)	313
COI	3924
WOR(TOT)	5771

APS SYSTEM LOAD W/O ED'S = 5924

SHUNT	CAPS ON/AVAIL	REACTORS ON/AVAIL
WESTWING	3500.0/0.0	-68.1/-418.0
PINNACLE PK	356.0/0.0	0.0/-140.0
CHOLLA	0.0/0.0	0.0/-115.0
SAGUARO	49.2/0.0	0.0/0.0
SAN MANUEL	15.6/92.1	0.0/0.0
SUNNYSLOPE	43.2/0.0	0.0/0.0
LINCONLN ST	35.0/0.0	0.0/0.0
WEST PHOENIX	35.0/0.0	0.0/0.0

MW/MVAR Wed Jan 29 15:08:38 2003

General Electric International, Inc. PSLF Program

Summer 2002 Coordinated Basecase ----- 3/11/2002
Arizona rep from VOP2001 basecase, WSCC Bulk case 2002hs3b
APS Rep updated as of 3/11/02. SRP Rep from VOP2001

2004oppoint_4200haa_10300mw no var margin
final changes from APS, SRP, WAPA for 2004,

c:\upslf131\w-area\ehv03.drw
c:\upslf131\w-area\2004oppoint
Rating = 2

VOLTS	MVAR
0.9375	-20.07
0.935	-20.20
0.9325	-19.92

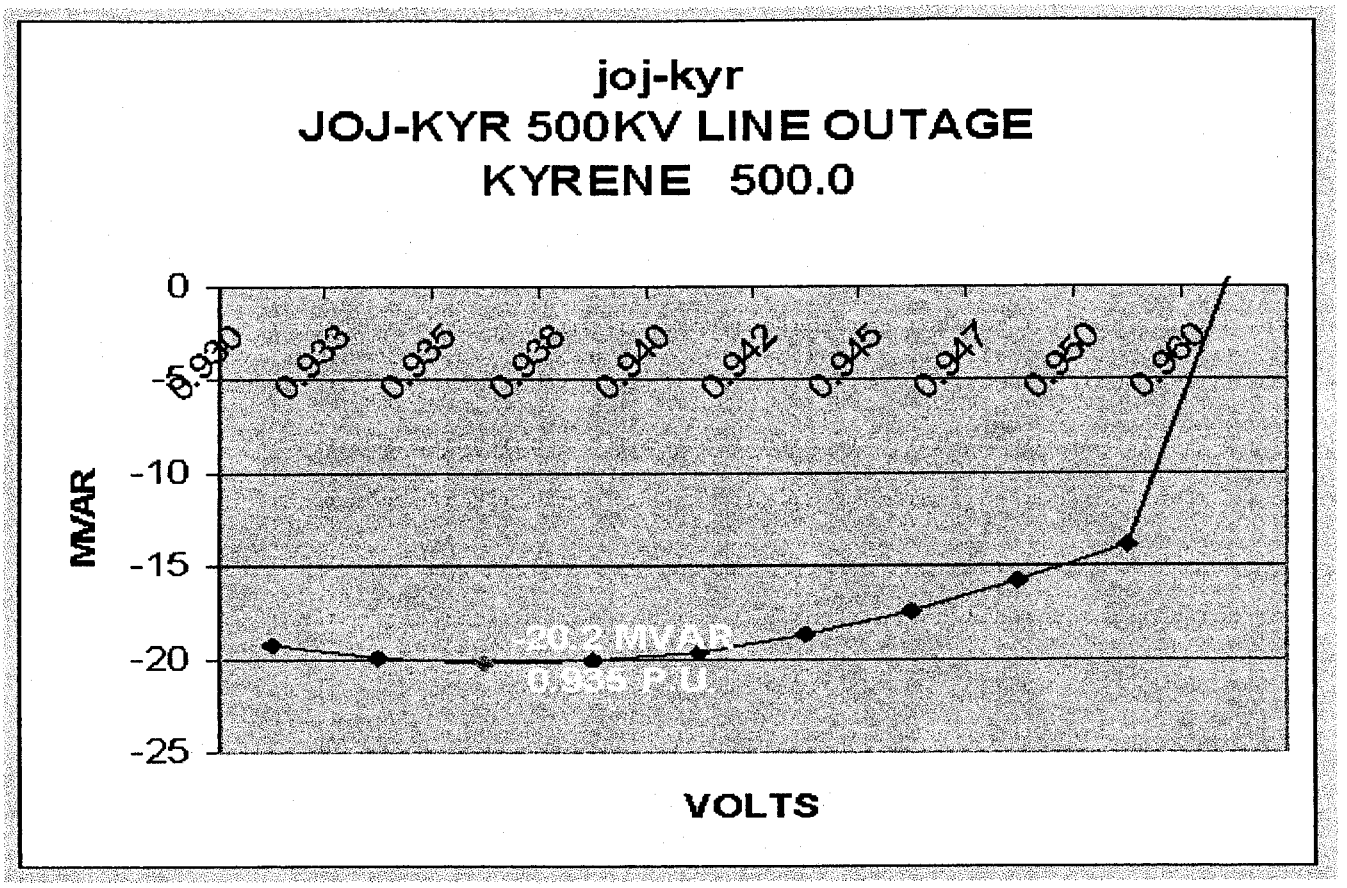

A26

VOLTS	MVAR
0.915	-19.80
0.9125	-20.23
0.91	-20.21

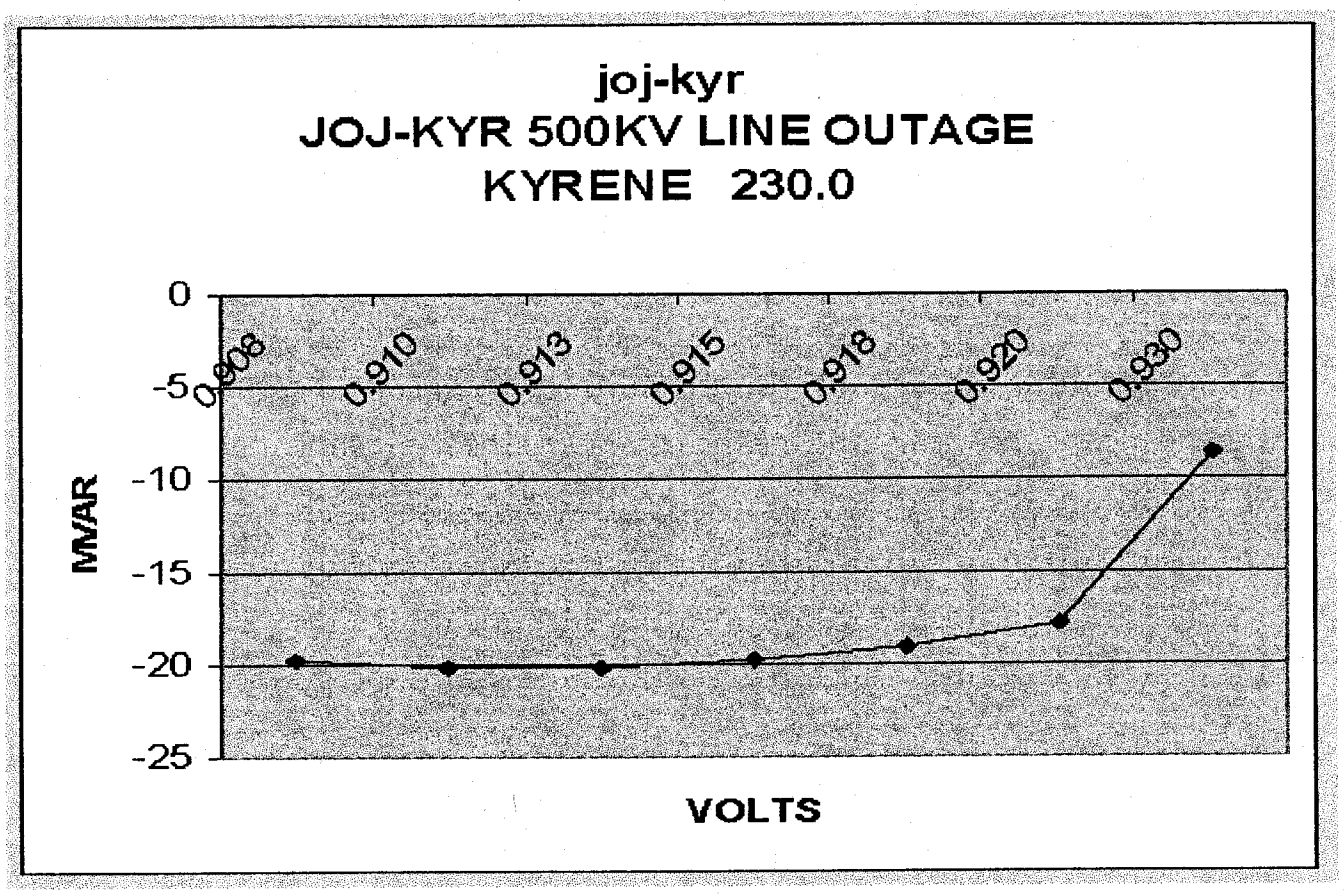

A27

VOLTS	MVAR
0.9275	-21.92
0.925	-21.99
0.9225	-21.51

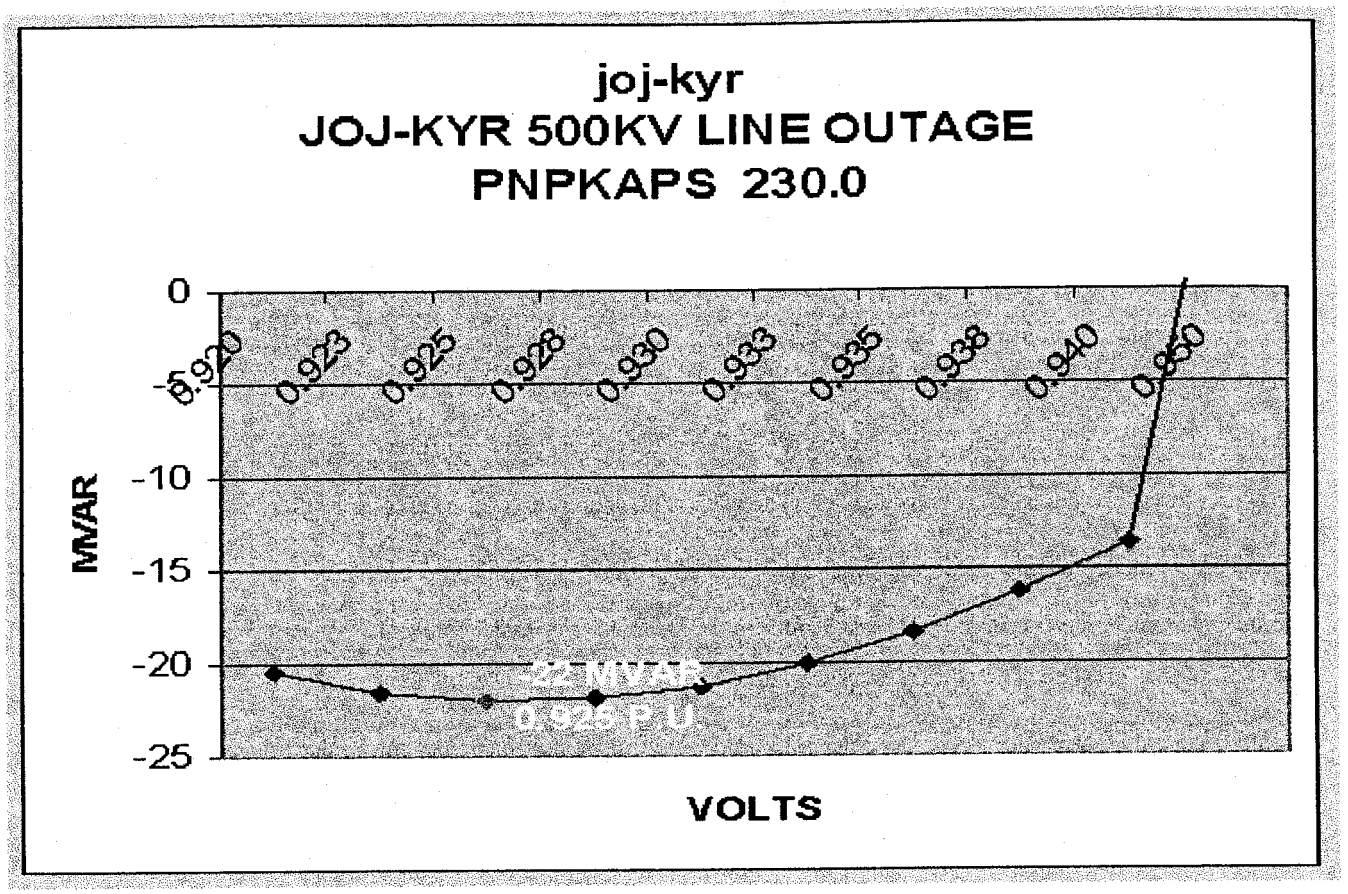

A28

VOLTS	MVAR
0.97	-32.59
0.9675	-32.83
0.965	-31.23

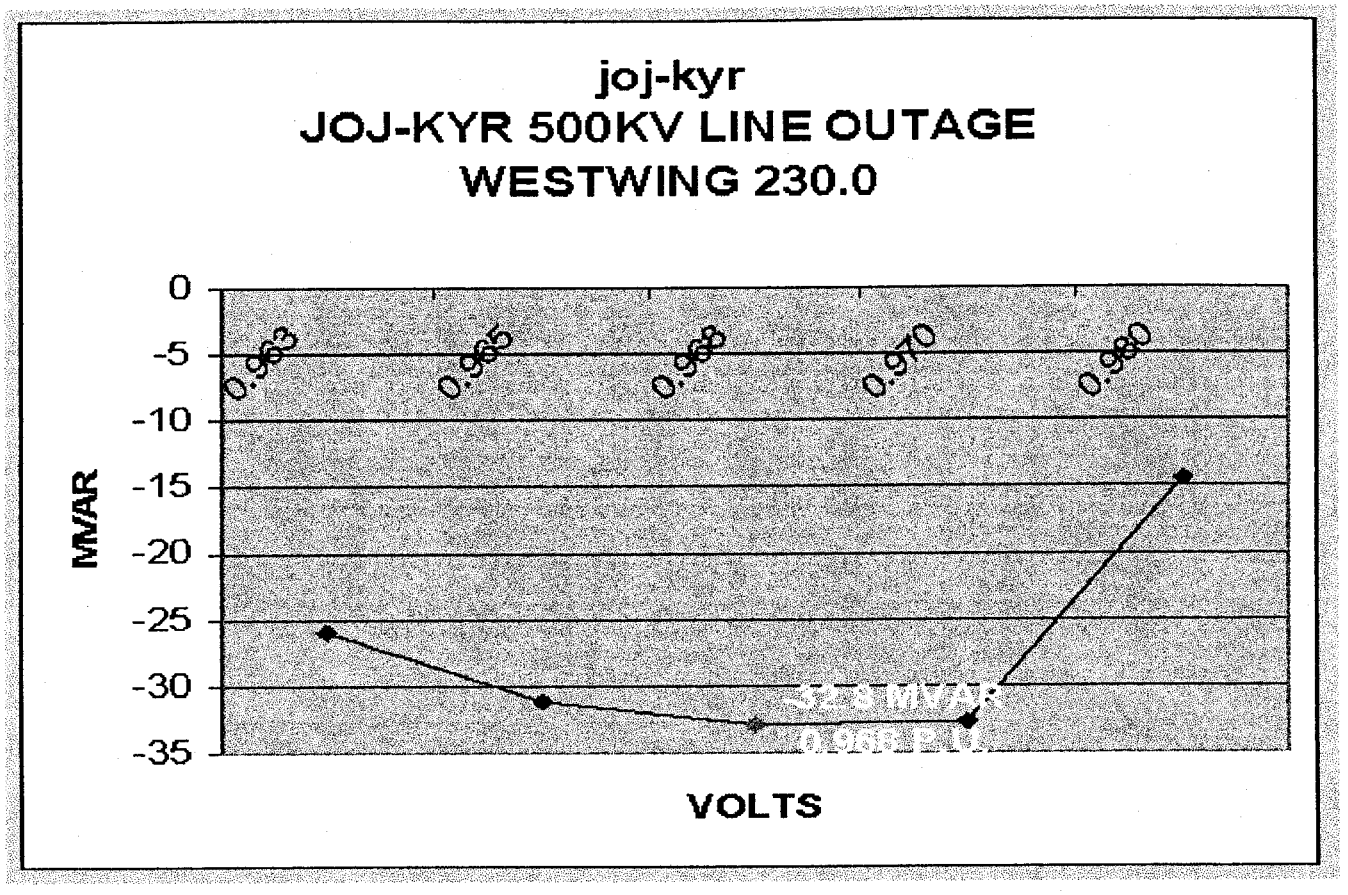

A29

A30

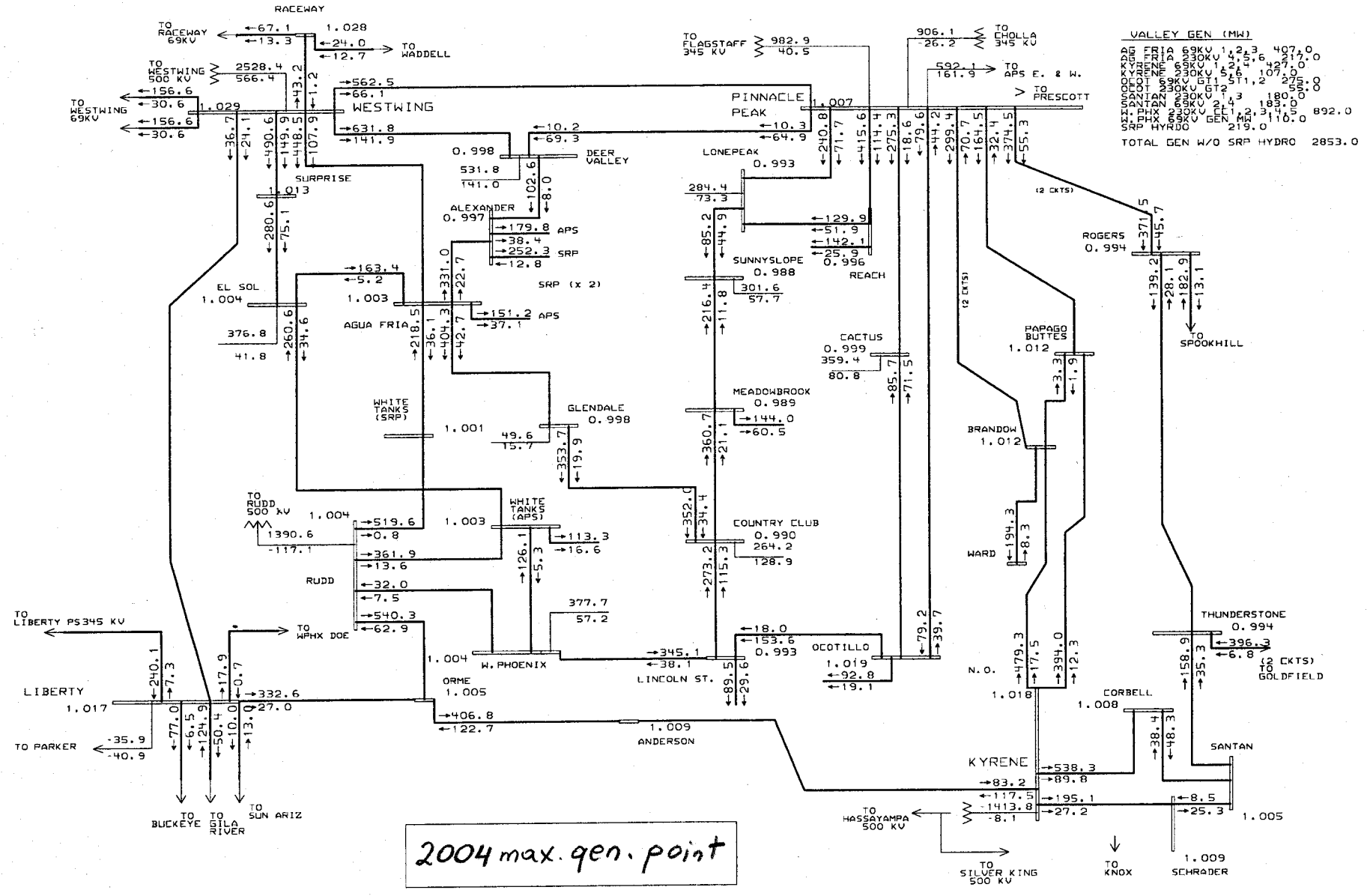

2004 max. gen. point

PHOENIX AREA 230KV SYSTEM

General Electric International, Inc. PSLF Program MW/MVAR Wed Jan 29 15:14:28 2003

Summer 2002 Coordinated Basecase ----- 3/11/2002
Arizona rep from VOP2001 basecase, WSCC Bulk case 2002hs3b
APS Rep updated as of 3/11/02. SRP Rep from VOP2001

2004max_4200ha_11925mw no var margin
final changes from APS,SRP,WAPA for 2004

c:\upslf131\w-area\met230_03a.
c:\upslf131\w-area\2004max_420
Rating = 2

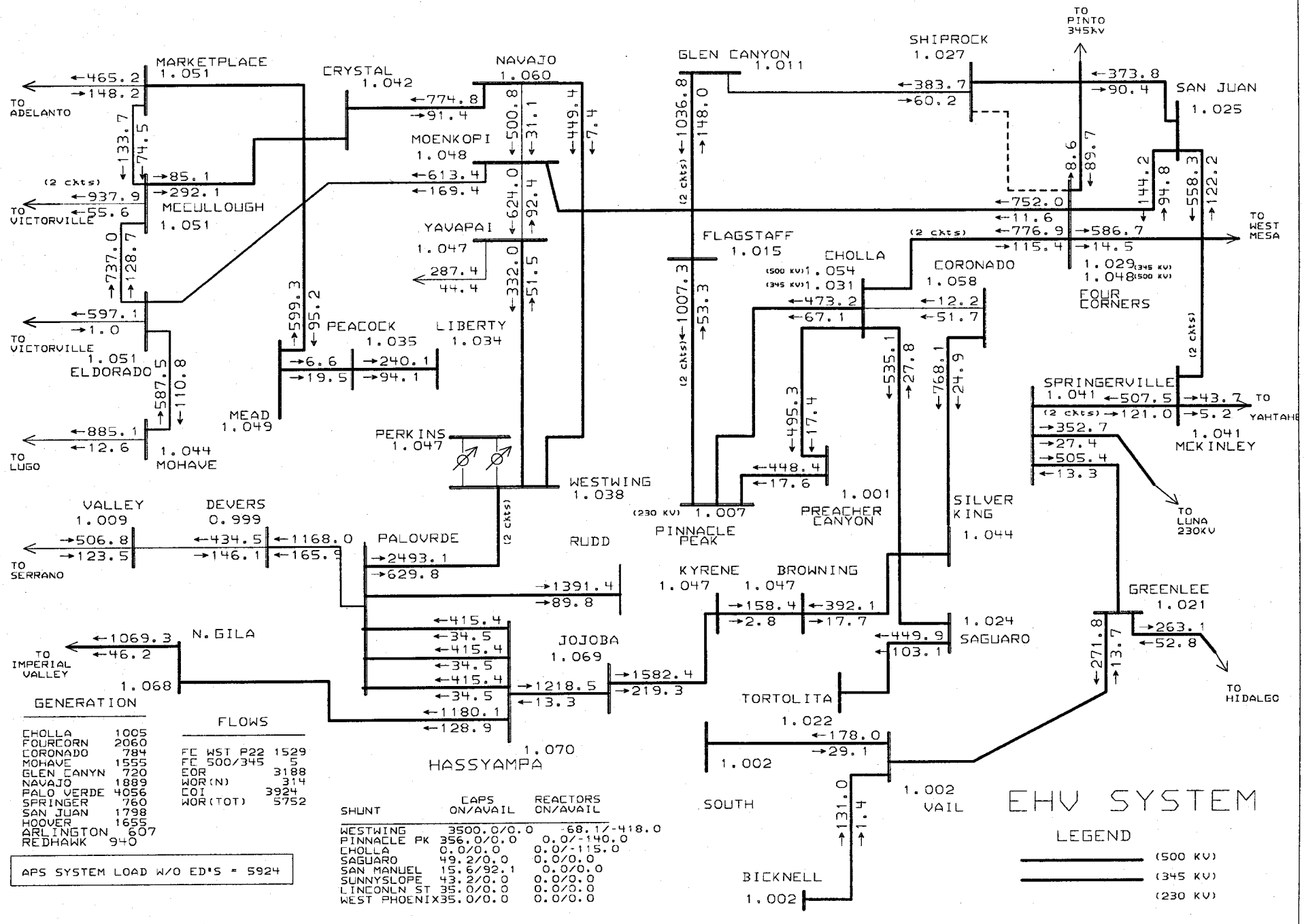

General Electric International, Inc. PSLF Program MW/MVAR Wed Jan 29 15:14:08 2003

Summer 2002 Coordinated Basecase ----- 3/11/2002
Arizona rep from VOP2001 basecase, WSCC Bulk case 2002hs3b
APS Rep updated as of 3/11/02. SRP Rep from VOP2001

2004max_4200ha_11925mw no var margin
final changes from APS,SRP,WAPA for 2004

c:\upslf131\w-area\ehv03.drw
c:\upslf131\w-area\2004max_420
Rating = 2

A31

VOLTS	MVAR
0.97	2.07
0.96	-10.35
0.9575	-10.10

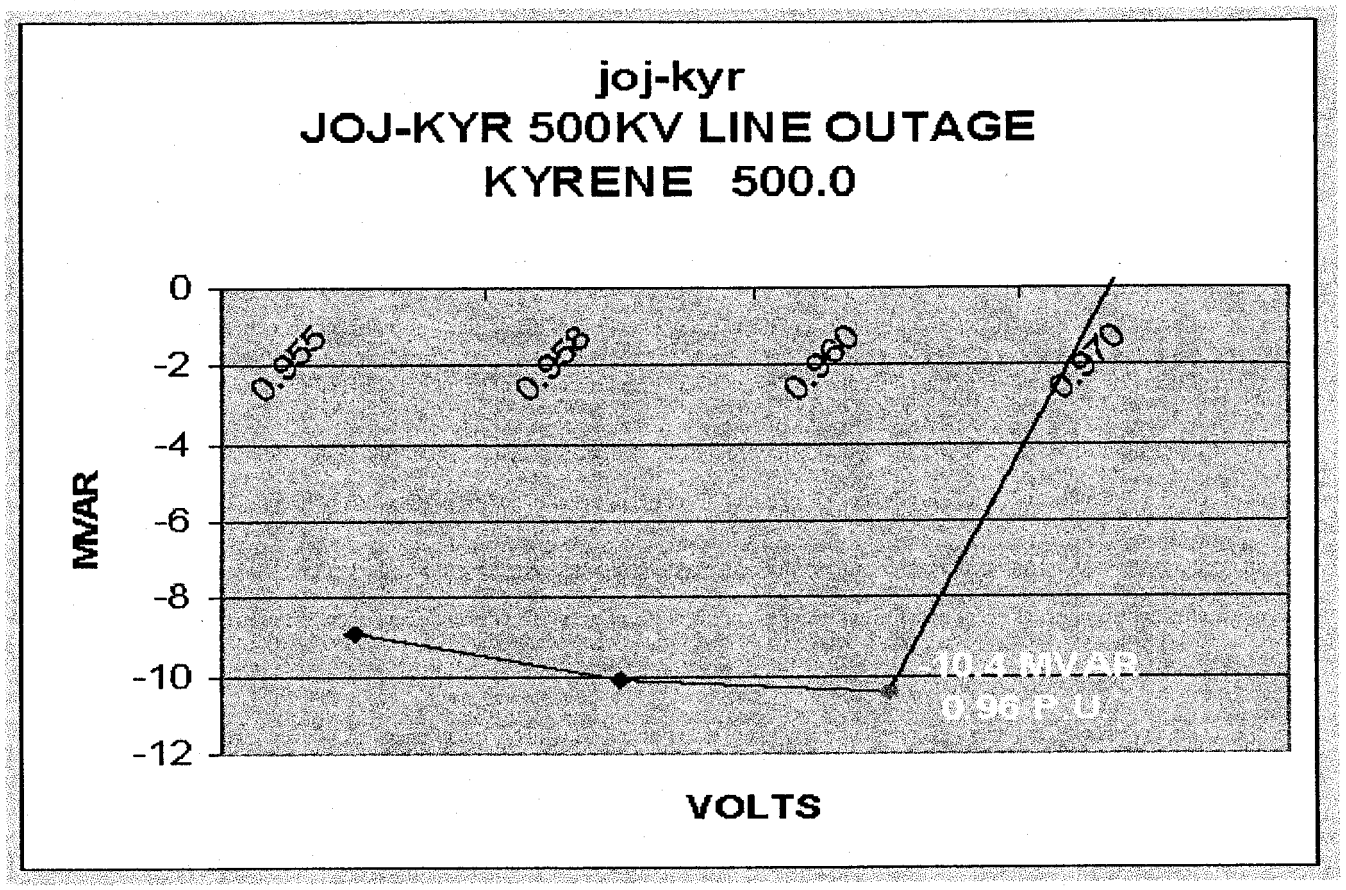

A32

VOLTS	MVAR
0.9375	-10.24
0.935	-10.40
0.9325	-9.97

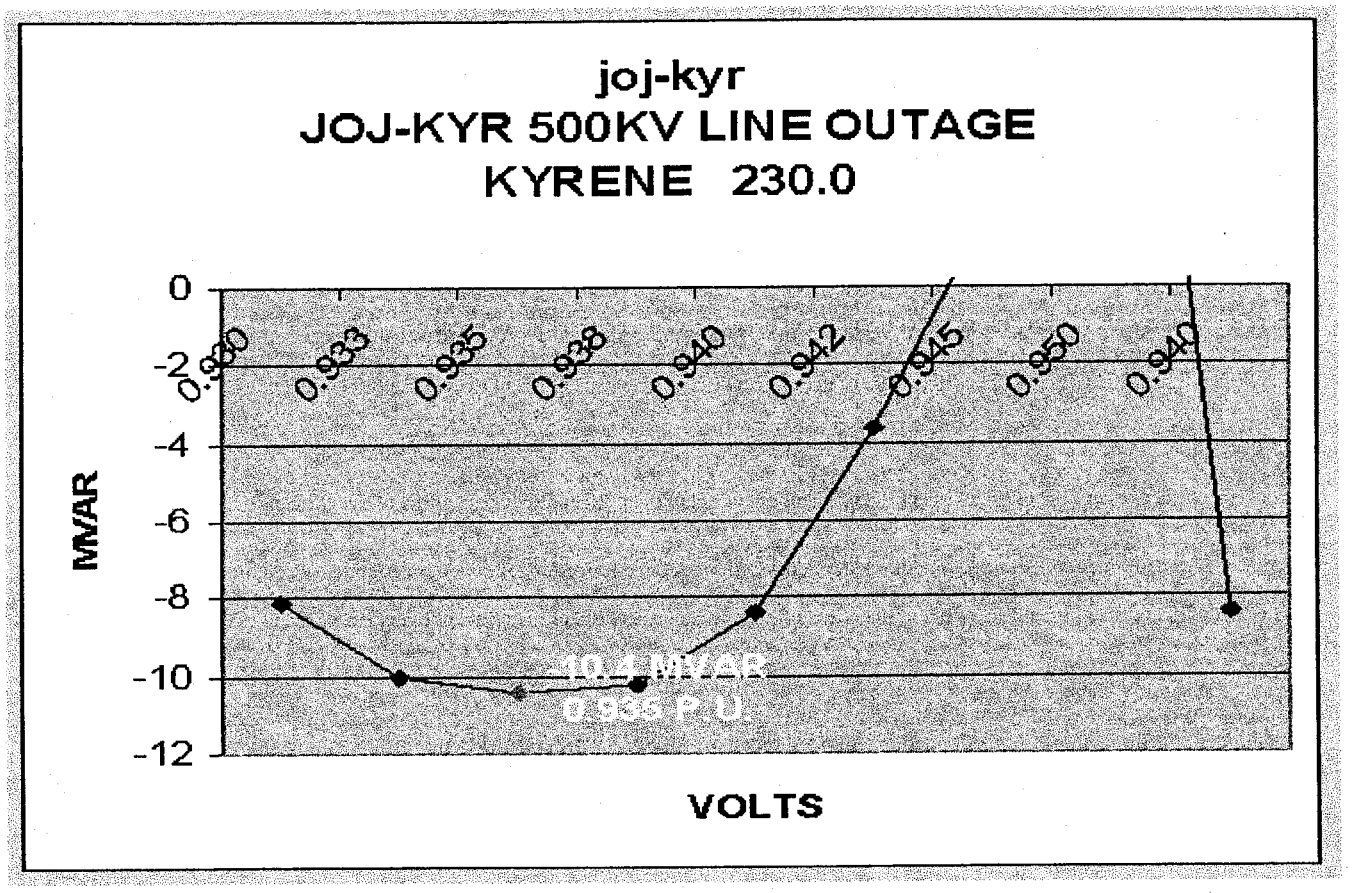

A33

VOLTS	MVAR
0.94	-0.19
0.93	-10.34
0.9275	-9.02

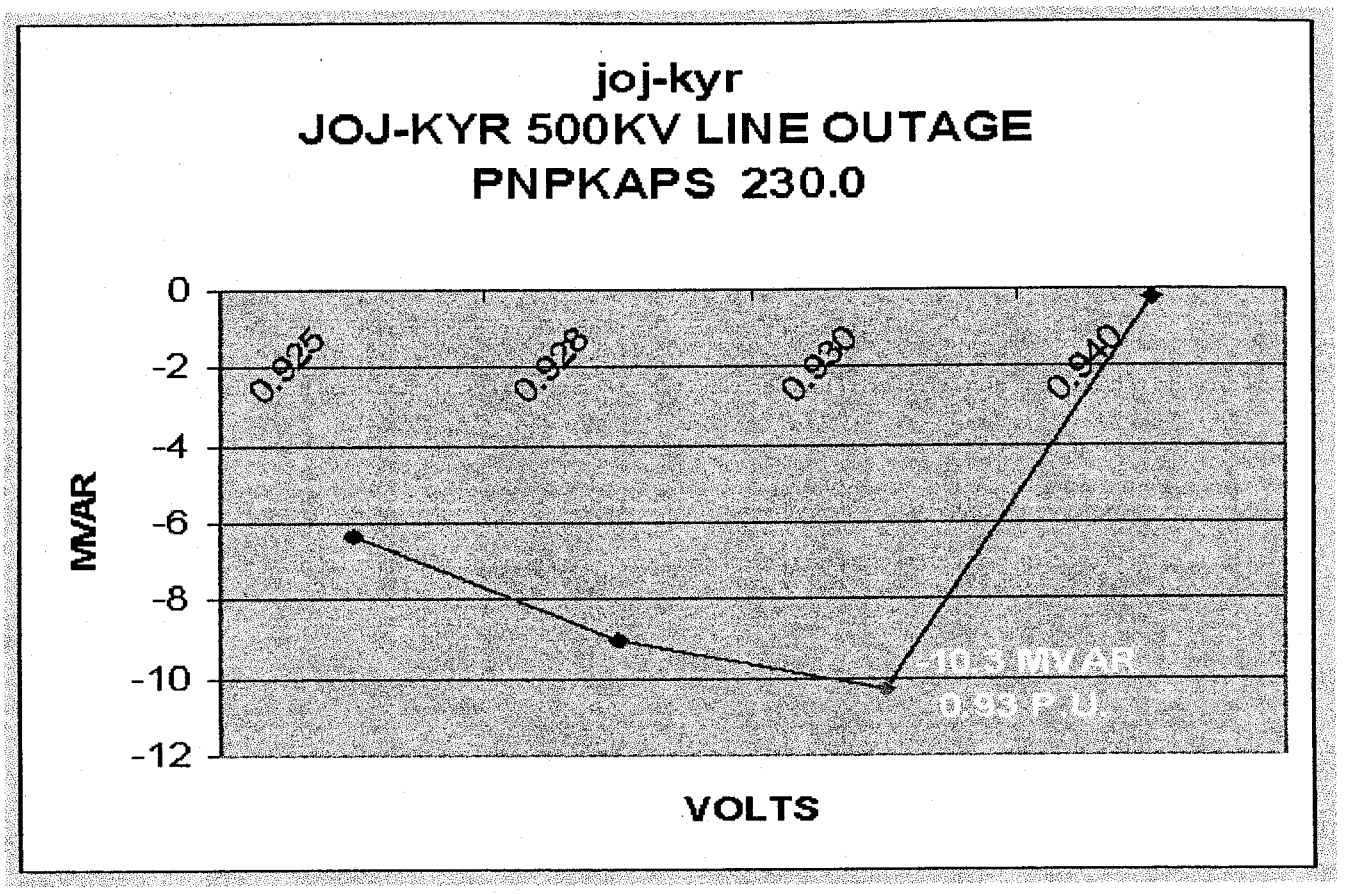

A34

VOLTS	MVAR
0.98	1.05
0.97	-10.94
0.9675	-0.08

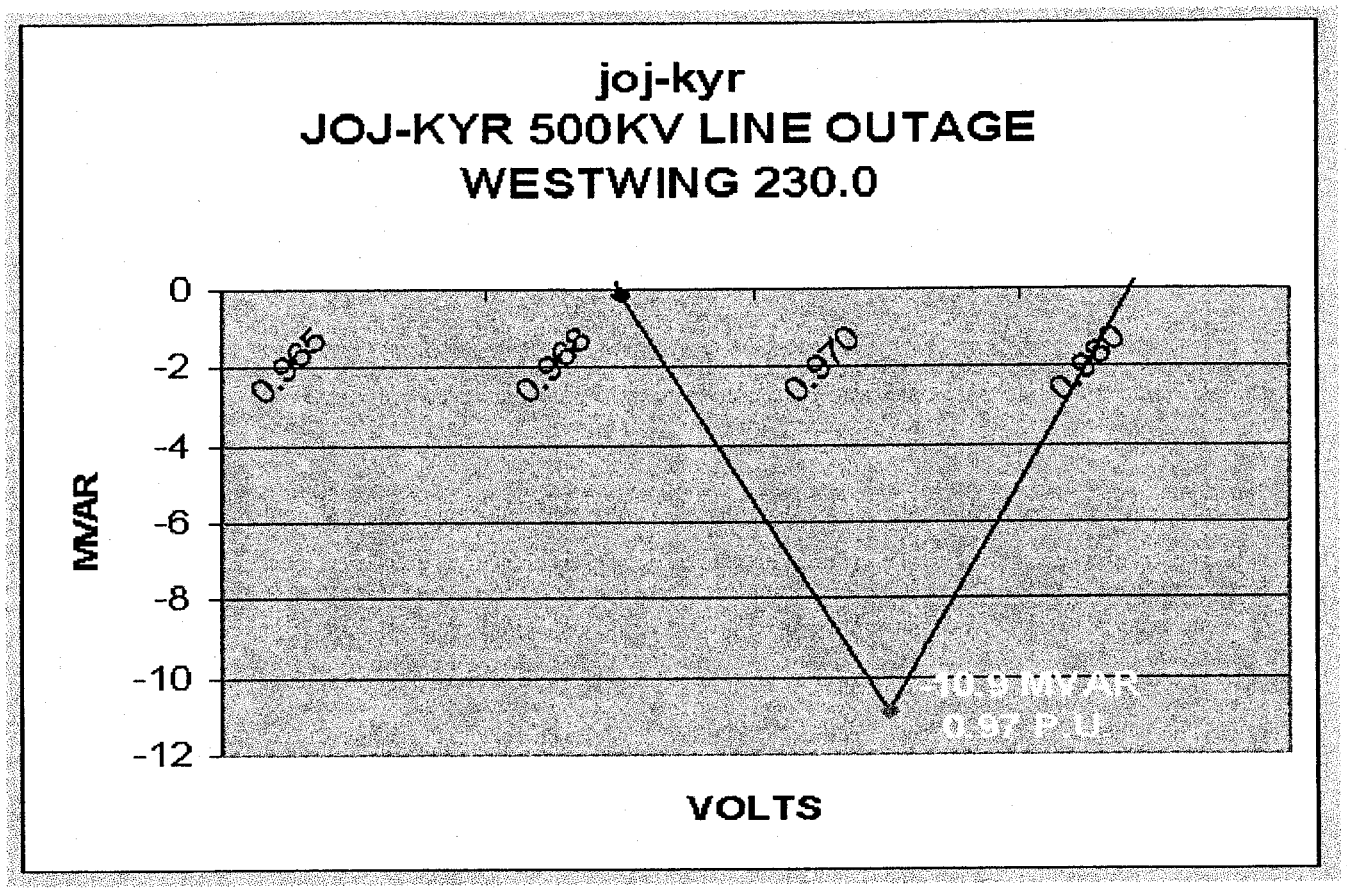

A35

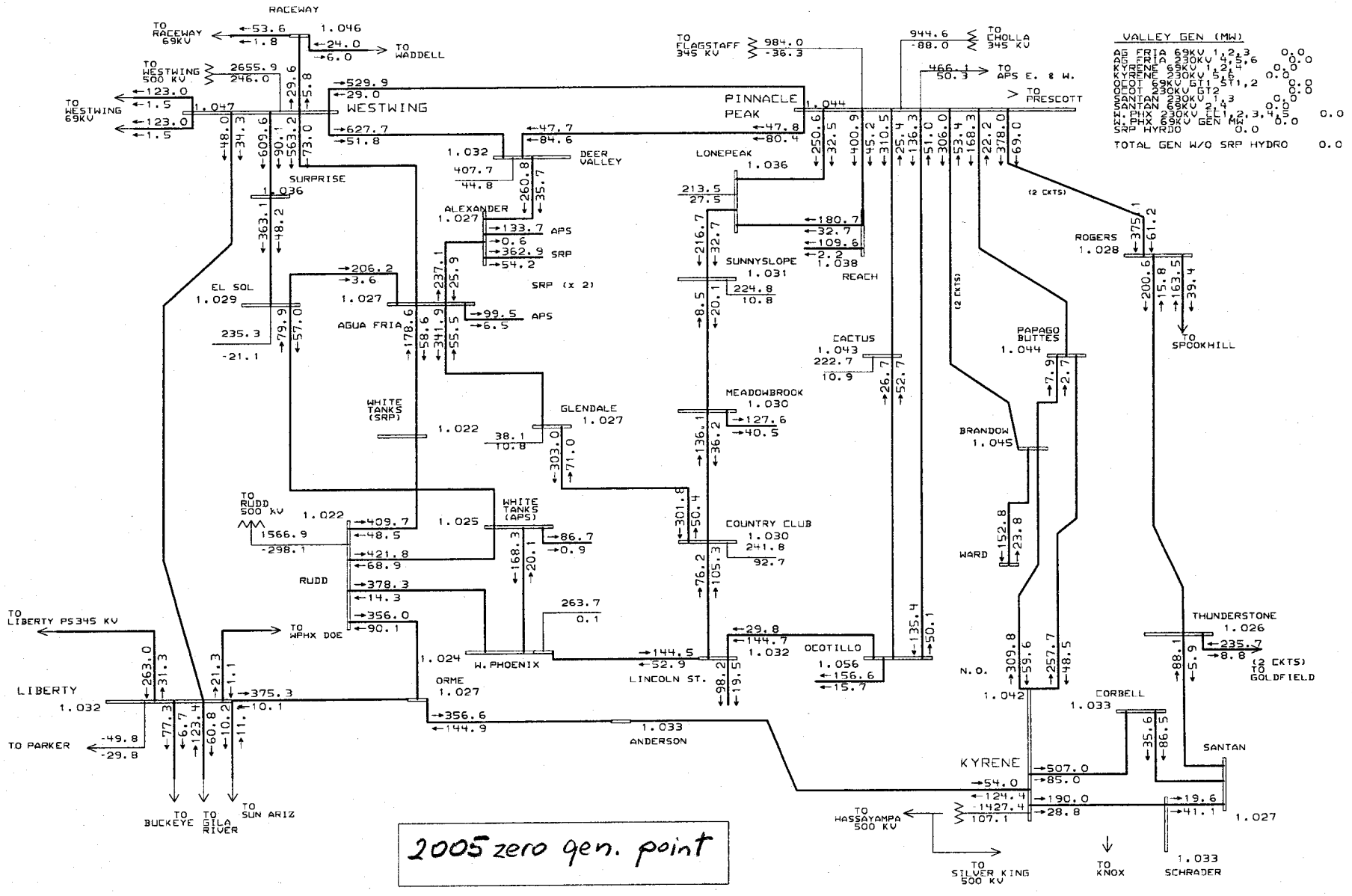

2005 zero gen. point

PHOENIX AREA 230KV SYSTEM

A36

General Electric International, Inc. PSLF Program MW/MVAR Wed Jan 29 15:19:20 2003

Summer 2002 Coordinated Basecase ----- 3/11/2002
Arizona rep from VOP2001 basecase, WSCC Bulk case 2002hs3b
APS Rep updated as of 3/11/02. SRP Rep from VOP2001

2005zero_4200haa_9193mw no var changes
final changes from APS,SRP,WAPA for 2005

c:\upslf131\w-area\met230_03a.
c:\upslf131\w-area\2005zero_42
Rating = 2

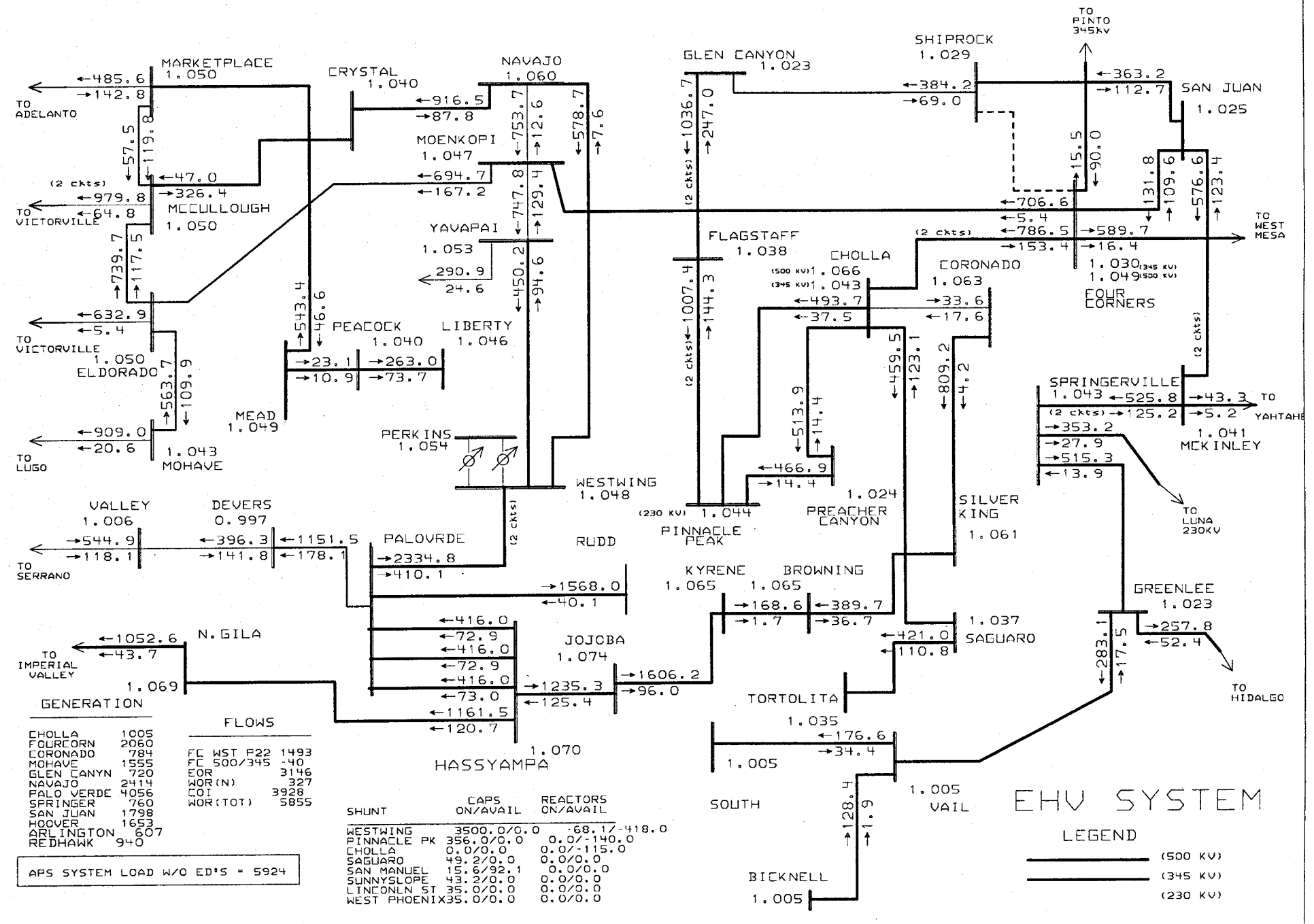

A37

General Electric International, Inc. PSLF Program

MW/MVAR Wed Jan 29 15:18:58 2003

Summer 2002 Coordinated Basecase ----- 3/11/2002
Arizona rep from VOP2001 basecase, WSCC Bulk case 2002hs3b
APS Rep updated as of 3/11/02. SRP Rep from VOP2001

2005zero_4200haa_9193mw no var changes
final changes from APS,SRP,WAPA for 2005

c:\upslf131\w-area\ehv03.drw
c:\upslf131\w-area\2005zero_42
Rating = 2

VOLTS	MVAR
0.9375	-14.05
0.935	-15.02
0.9325	-15.00

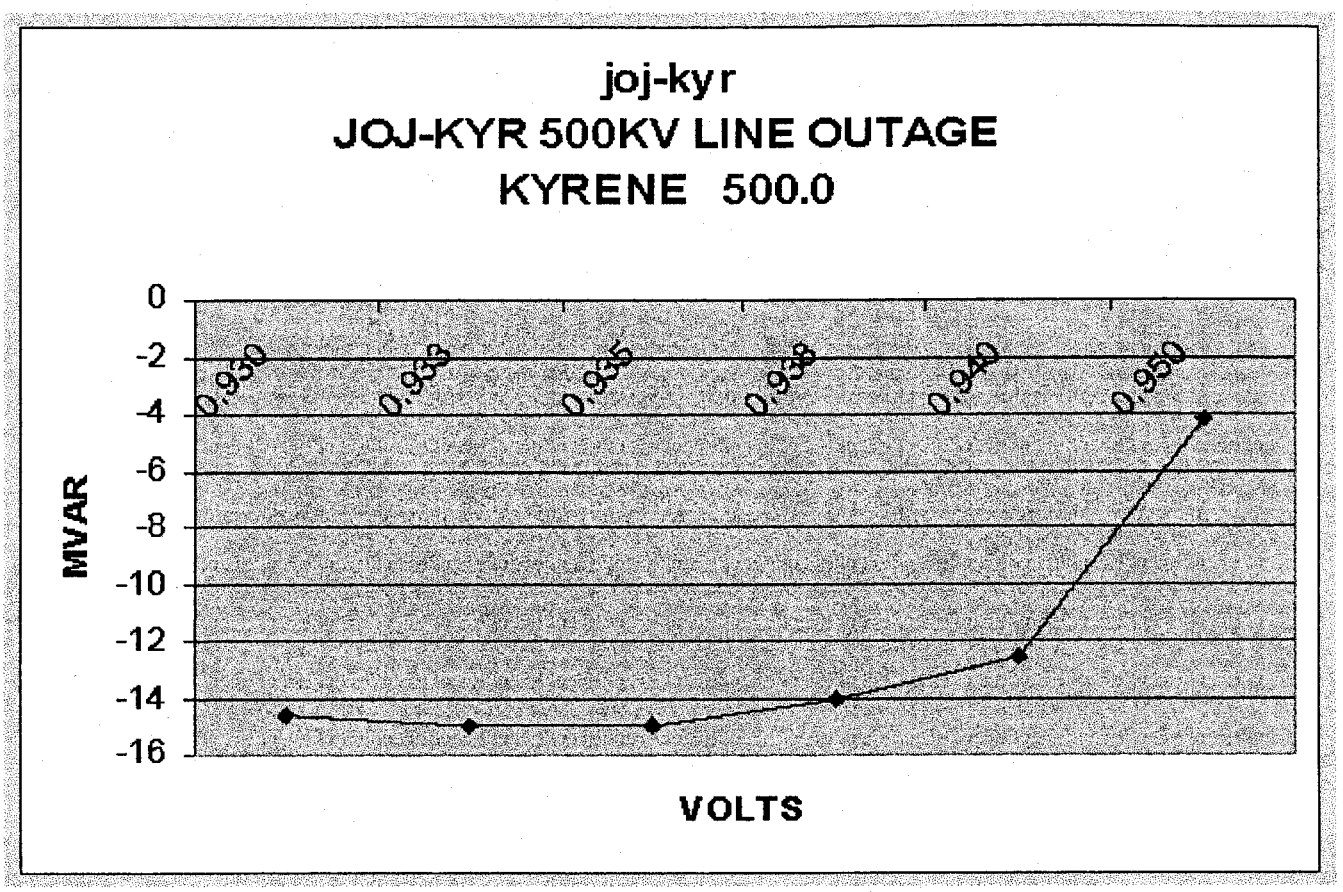

A38

VOLTS	MVAR
0.915	-14.42
0.9125	-15.13
0.91	-15.01

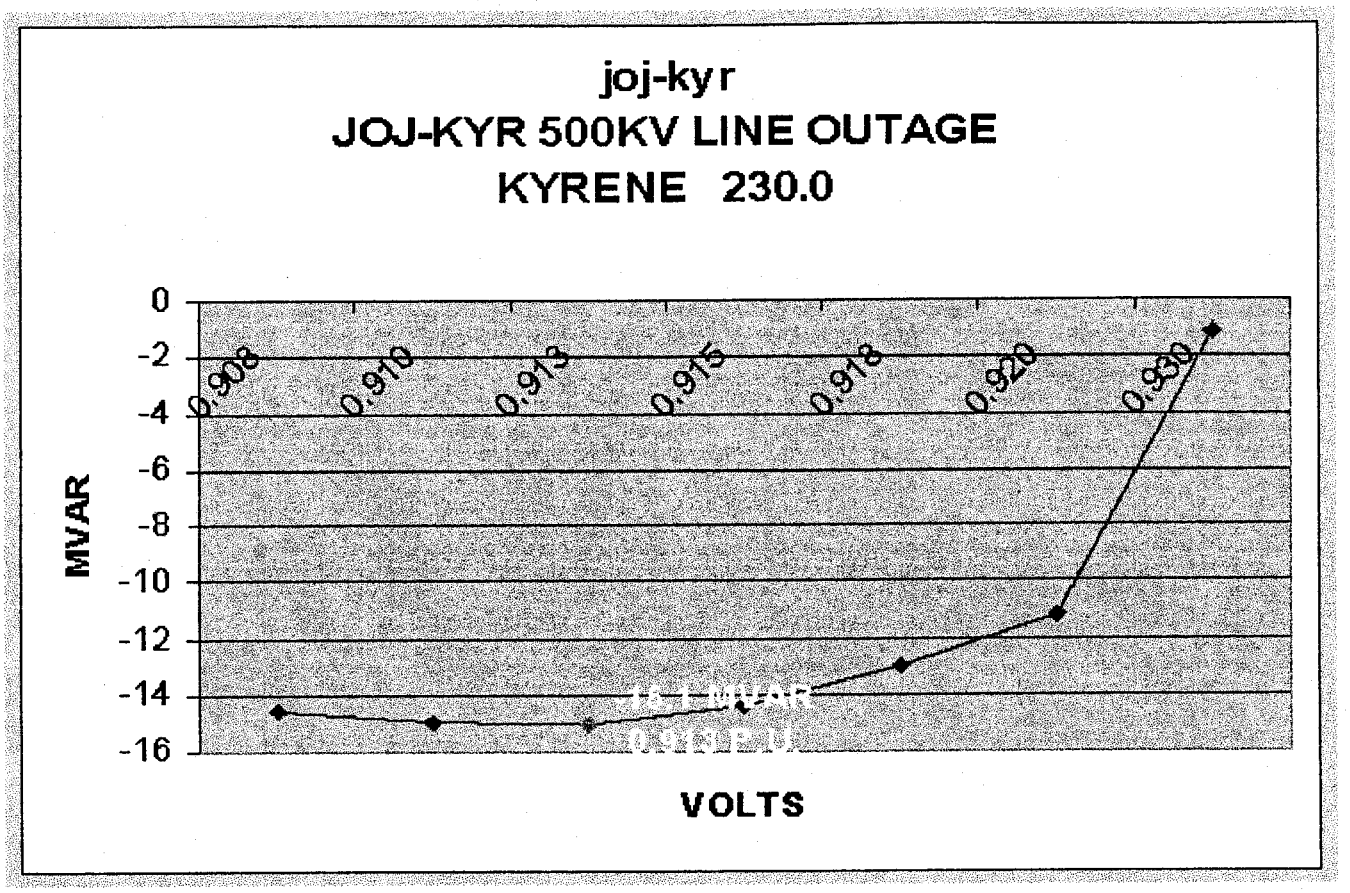

A39

VOLTS	MVAR
0.9325	-16.96
0.93	-16.99
0.9275	-16.52

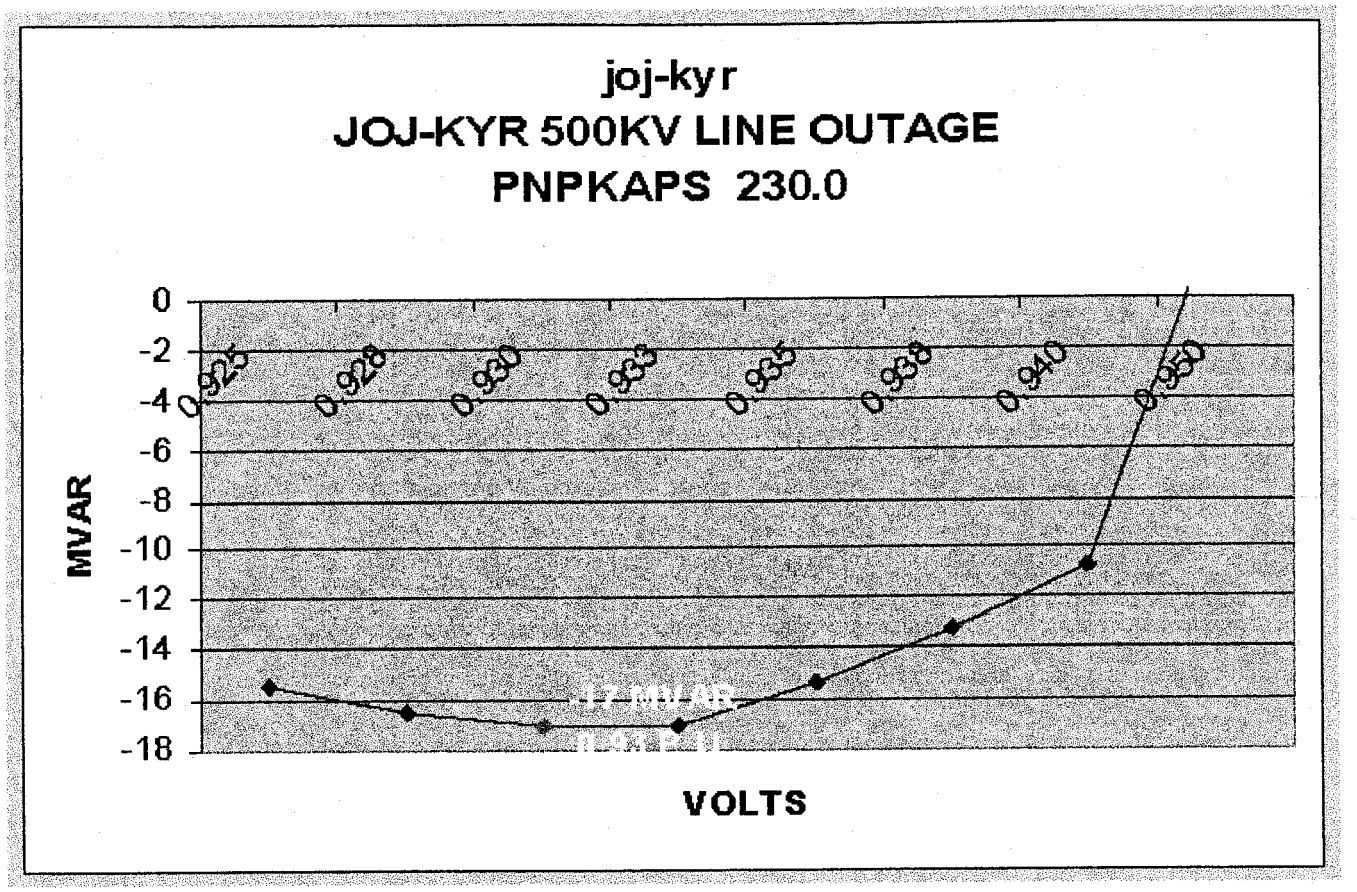

A40

VOLTS	MVAR
0.97	-23.01
0.9675	-24.27
0.965	-23.46

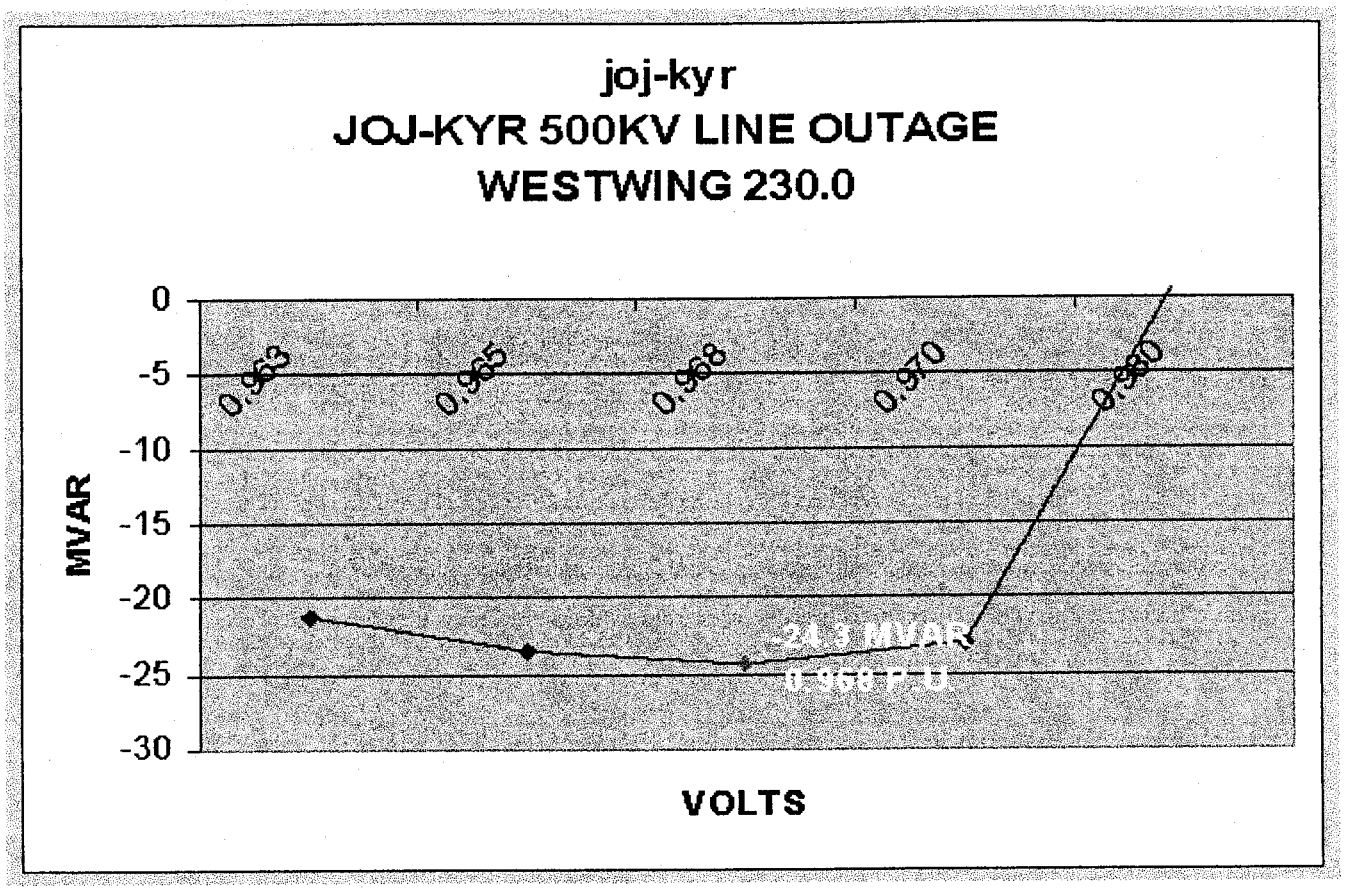

A41

A42

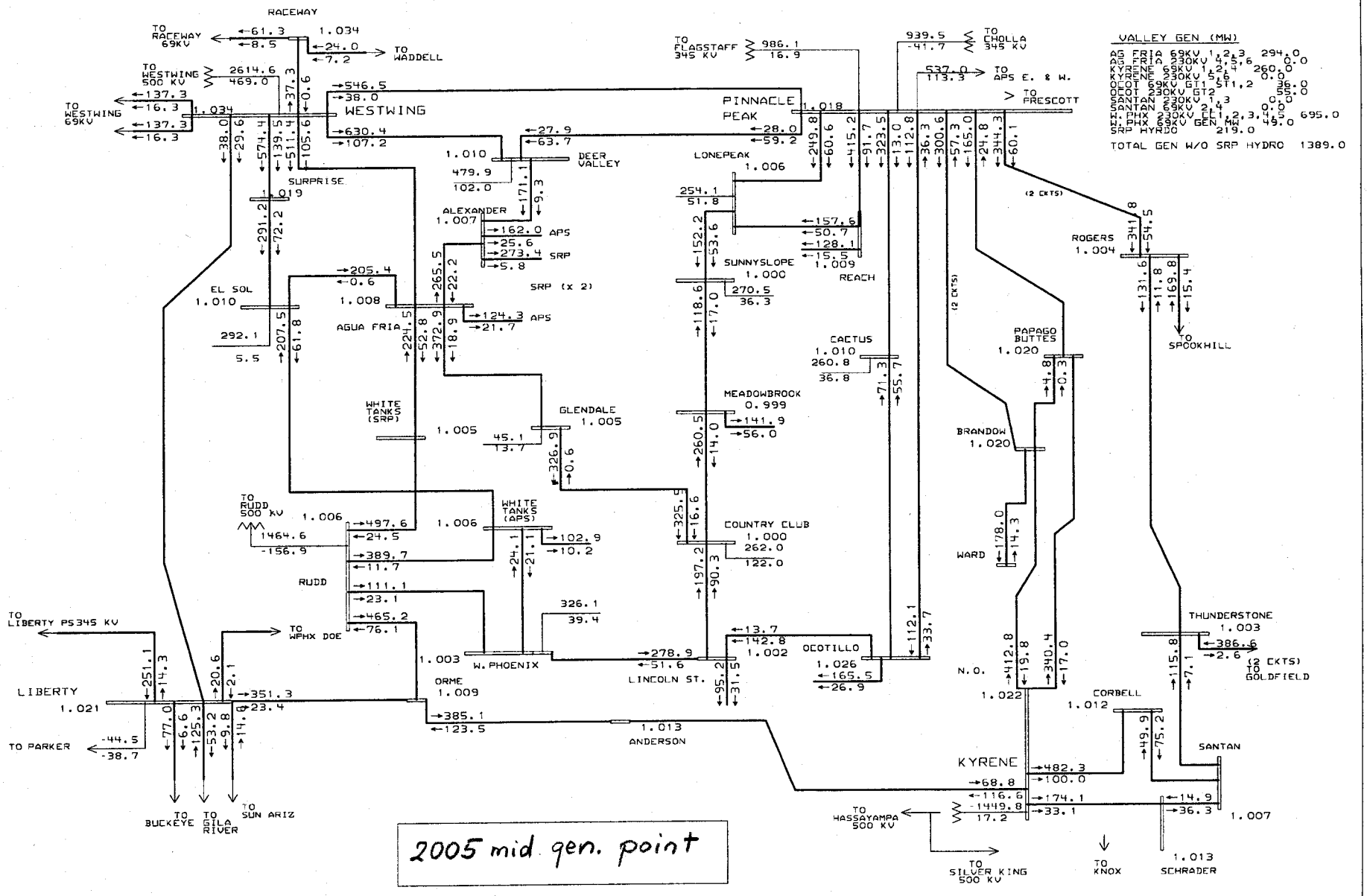

2005 mid gen. point

PHOENIX AREA 230KV SYSTEM

General Electric International, Inc. PSLF Program MW/MVAR Wed Jan 29 15:24:34 2003

Summer 2002 Coordinated Basecase ----- 3/11/2002
Arizona rep from VOP2001 basecase, WSCC Bulk case 2002hs3b
APS Rep updated as of 3/11/02. SRP Rep from VOP2001

2005oppoint_4200haa_10858 no var changes
final changes from APS,SRP,WAPA for 2005

c:\upslf131\w-area\met230_03a.
c:\upslf131\w-area\2005oppoint
Rating = 2

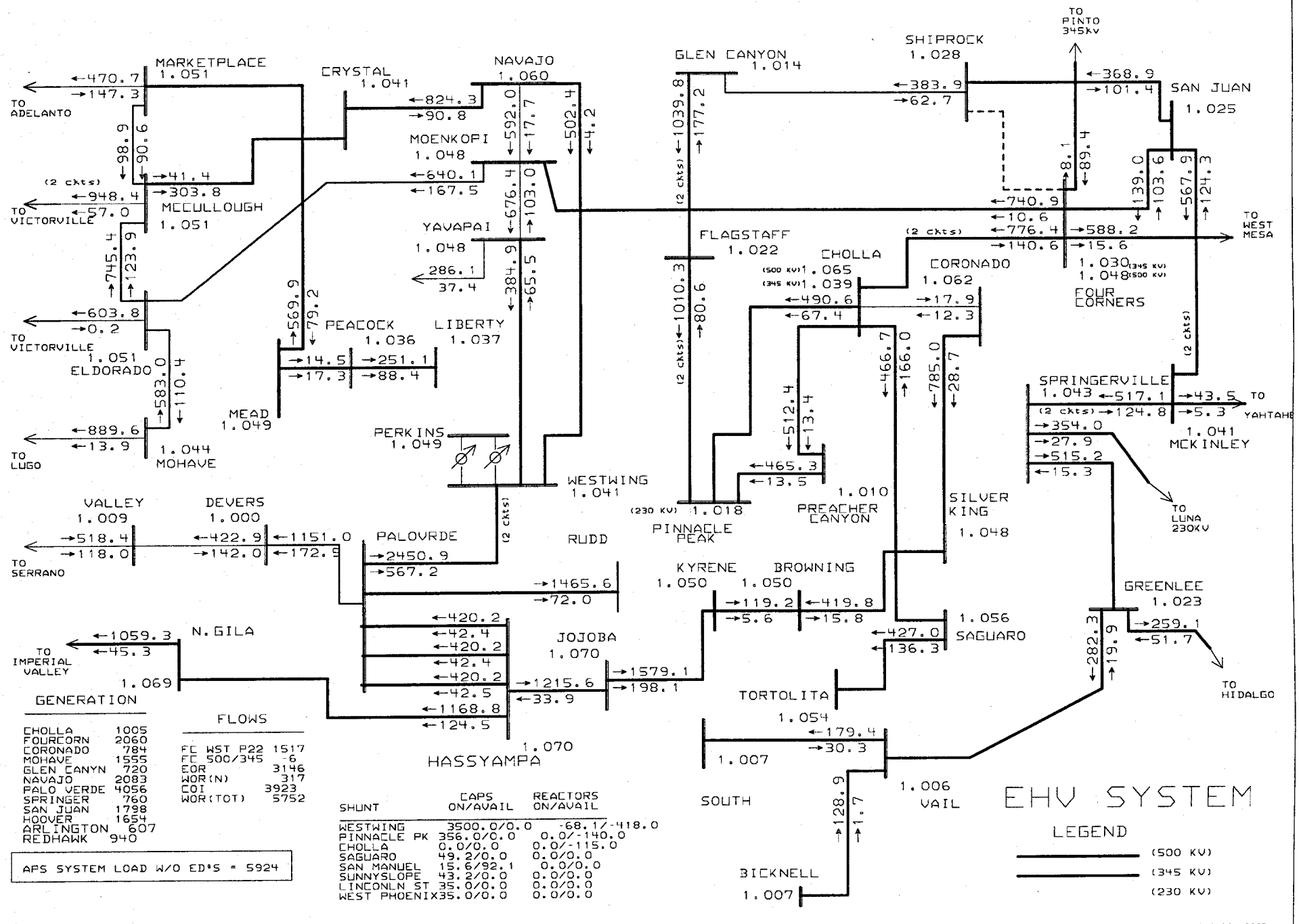

GENERATION

CHOLLA	1005
FOURCORN	2060
CORONADO	784
MOHAVE	1555
GLEN CANYN	720
NAVAJO	2083
PALO VERDE	4056
SPRINGER	760
SAN JUAN	1798
HOOVER	1654
ARLINGTON	607
REDHAWK	940

FLOWS

FC WST P22	1517
FC 500/345	-6
EOR	3146
WOR(N)	317
COI	3923
WOR(TOT)	5752

SHUNT	CAPS ON/AVAIL	REACTORS ON/AVAIL
WESTWING	3500.0/0.0	-68.1/-418.0
PINNACLE PK	356.0/0.0	0.0/-140.0
CHOLLA	0.0/0.0	0.0/-115.0
SAGUARO	49.2/0.0	0.0/0.0
SAN MANUEL	15.6/92.1	0.0/0.0
SUNNYSLOPE	43.2/0.0	0.0/0.0
LINCONLN ST	35.0/0.0	0.0/0.0
WEST PHOENIX	35.0/0.0	0.0/0.0

APS SYSTEM LOAD W/O ED'S = 5924

A43

General Electric International, Inc. PSLF Program MW/MVAR Wed Jan 29 15:24:02 2003

Summer 2002 Coordinated Basecase ----- 3/11/2002
Arizona rep from VOP2001 basecase, WSCC Bulk case 2002hs3b
APS Rep updated as of 3/11/02. SRP Rep from VOP2001

2005oppoint_4200haa_10858 no var changes
final changes from APS,SRP,WAPA for 2005

c:\ups\f131\w-area\ehv03.drw
c:\ups\f131\w-area\2005oppoint
Rating = 2

VOLTS	MVAR
0.9475	-9.80
0.945	-10.18
0.9425	-9.59

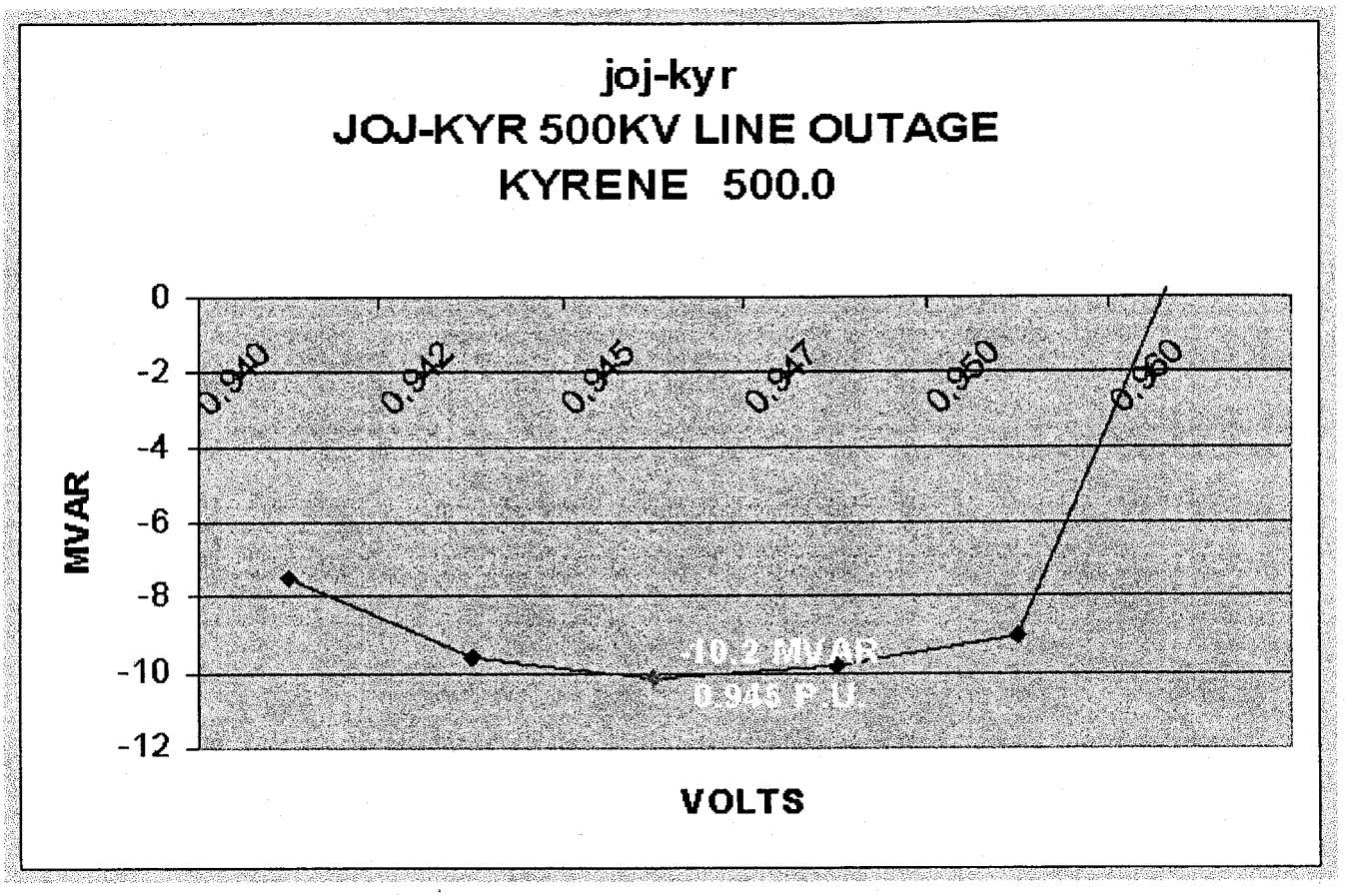

A44

VOLTS	MVAR
0.93	-4.60
0.92	-10.29
0.9175	-9.10

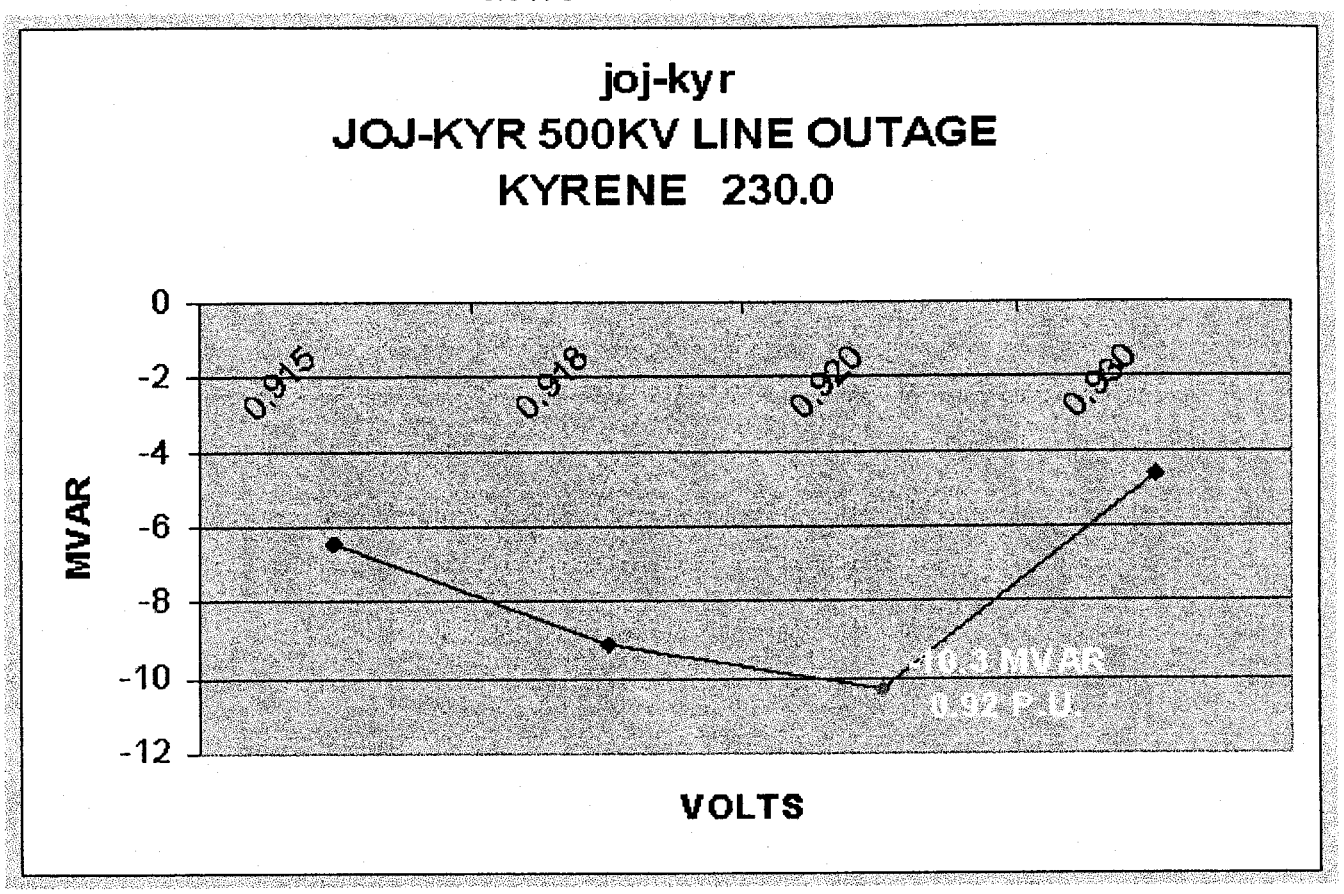

A45

VOLTS	MVAR
0.9275	-10.32
0.925	-10.71
0.9225	-9.69

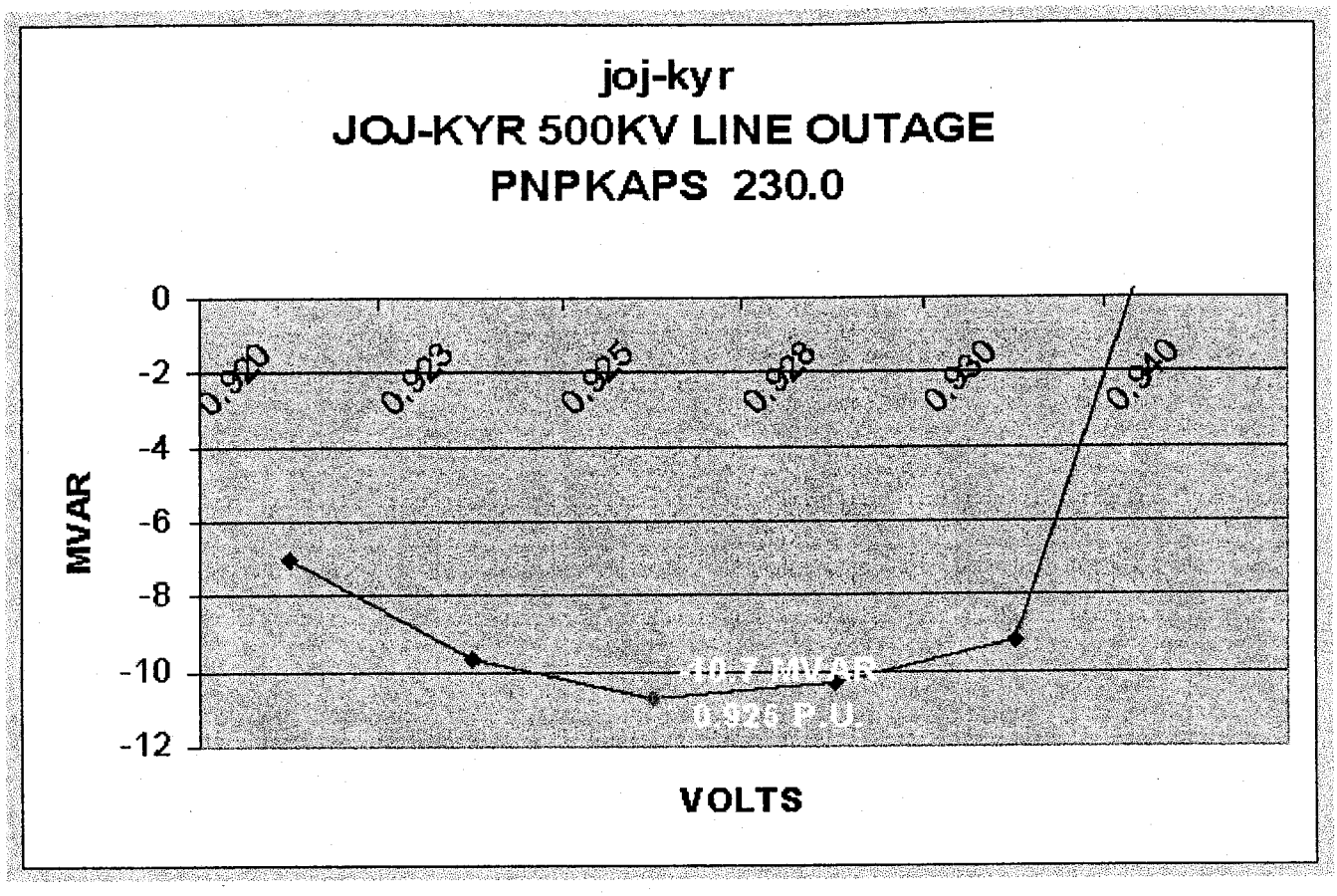

A46

VOLTS	MVAR
0.97	-13.98
0.9675	-15.72
0.965	-14.23

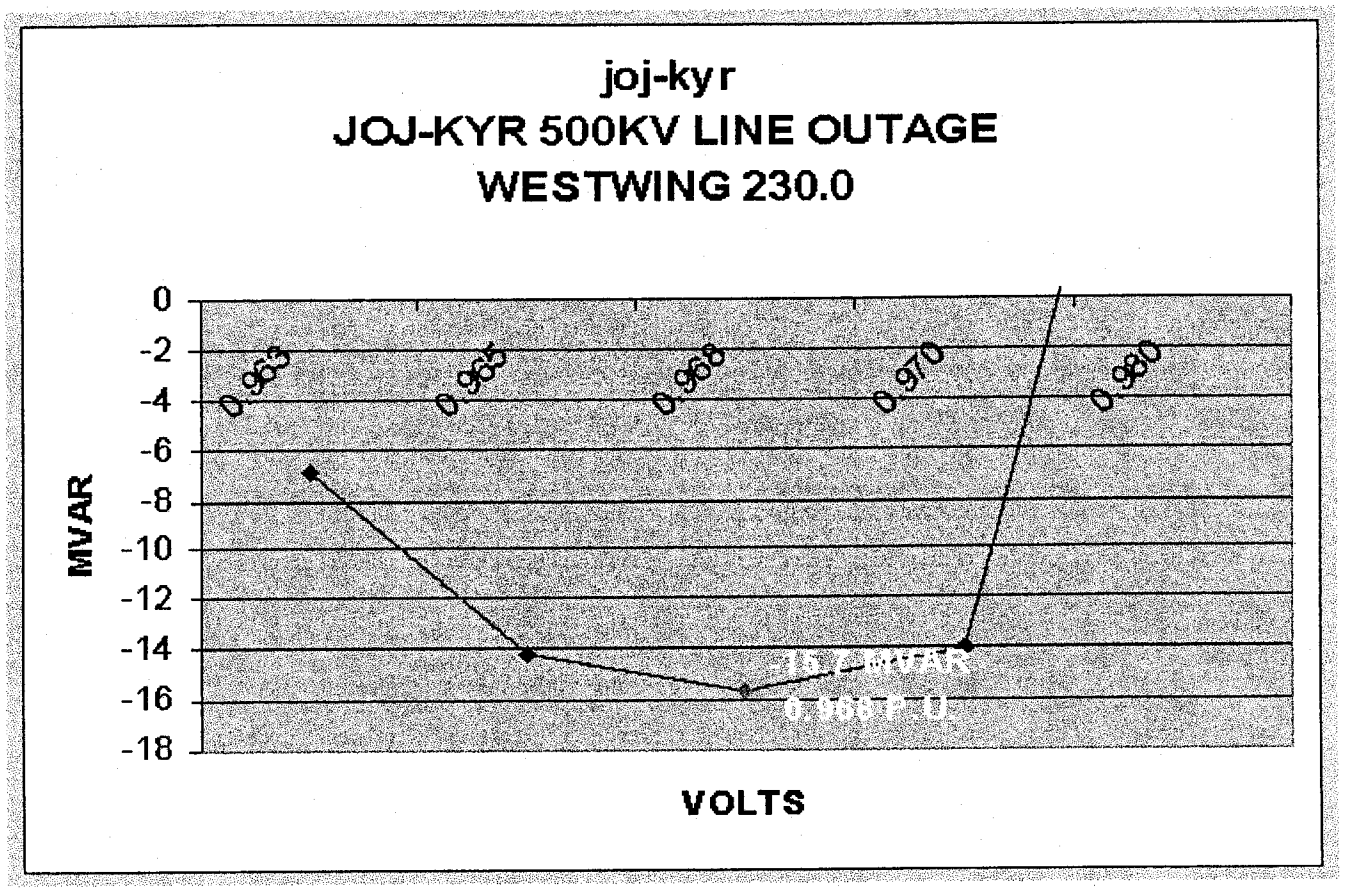

A47

A48

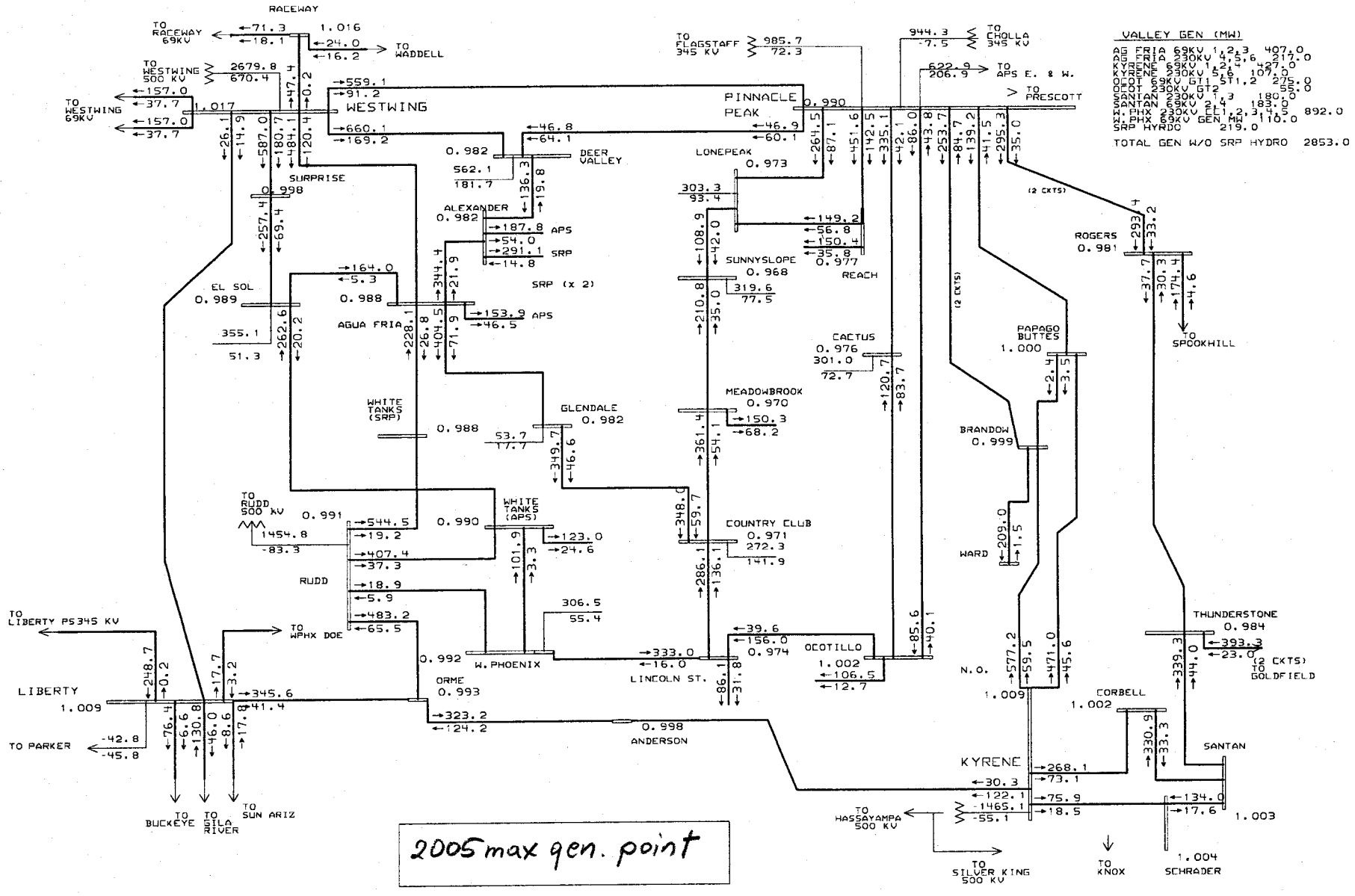

PHOENIX AREA 230KV SYSTEM

General Electric International, Inc. PSLF Program

MW/MVAR Wed Jan 29 15:30:20 2003

Summer 2002 Coordinated Basecase ----- 3/11/2002
Arizona rep from VOP2001 basecase, WSCC Bulk case 2002hs3b
APS Rep updated as of 3/11/02. SRP Rep from VOP2001

2005max_4200haa_12906mw no var margin
final changes from APS,SRP,WAPA for 2005

c:\upslf131\w-area\met230_03a.
c:\upslf131\w-area\2005max_420
Rating = 2

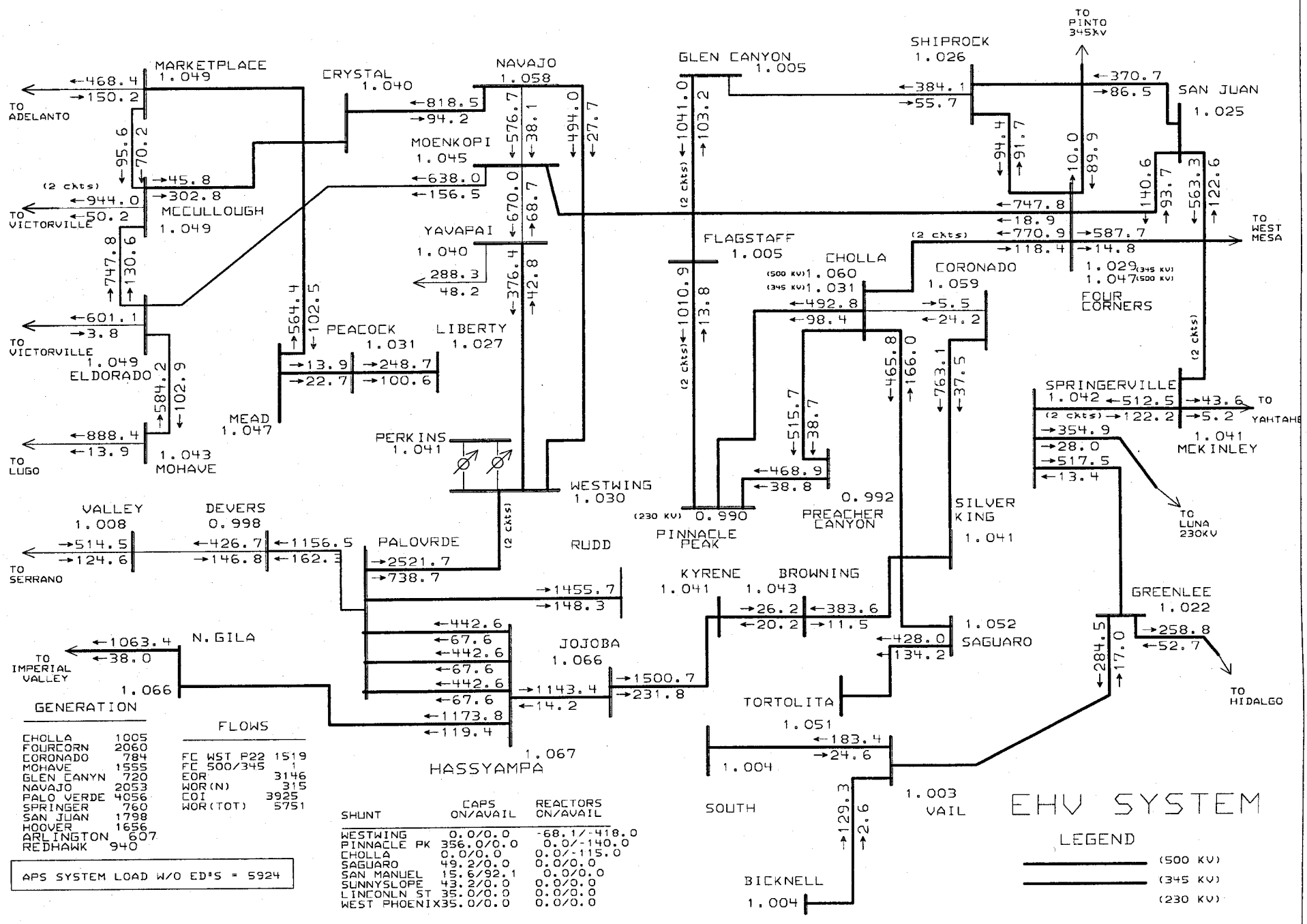

GENERATION

CHOLLA	1005
FOURCORN	2060
CORONADO	784
MOHAVE	1555
GLEN CANYN	720
NAVAJO	2053
PALO VERDE	4056
SPRINGER	760
SAN JUAN	1798
HOOVER	1656
ARLINGTON	607
REDHAWK	940

FLOWS

FC WST P22	1519
FC 500/345	1
EOR	3146
WOR(N)	315
COI	3925
WOR(TOT)	5751

APS SYSTEM LOAD W/O ED'S = 5924

SHUNT	CAPS ON/AVAIL	REACTORS ON/AVAIL
WESTWING	0.0/0.0	-68.1/-418.0
PINNACLE PK	356.0/0.0	0.0/-140.0
CHOLLA	0.0/0.0	0.0/-115.0
SAGUARO	49.2/0.0	0.0/0.0
SAN MANUEL	15.6/92.1	0.0/0.0
SUNNYSLOPE	43.2/0.0	0.0/0.0
LINCONLN ST	35.0/0.0	0.0/0.0
WEST PHOENIX	35.0/0.0	0.0/0.0

A49

General Electric International, Inc. PSLF Program

MW/MVAR Wed Jan 29 15:40:39 2003

Summer 2002 Coordinated Basecase ----- 3/11/2002
Arizona rep from VOP2001 basecase, WSCC Bulk case 2002hs3b
APS Rep updated as of 3/11/02. SRP Rep from VOP2001

2005max_4200haa_12906mw no var margin
final changes from APS,SRP,WAPA for 2005

c:\upslf131\w-area\ehv03.drw
c:\upslf131\w-area\2005max_420
Rating = 2

VOLTS	MVAR
0.98	-2.56
0.9775	-3.70
0.975	0.30

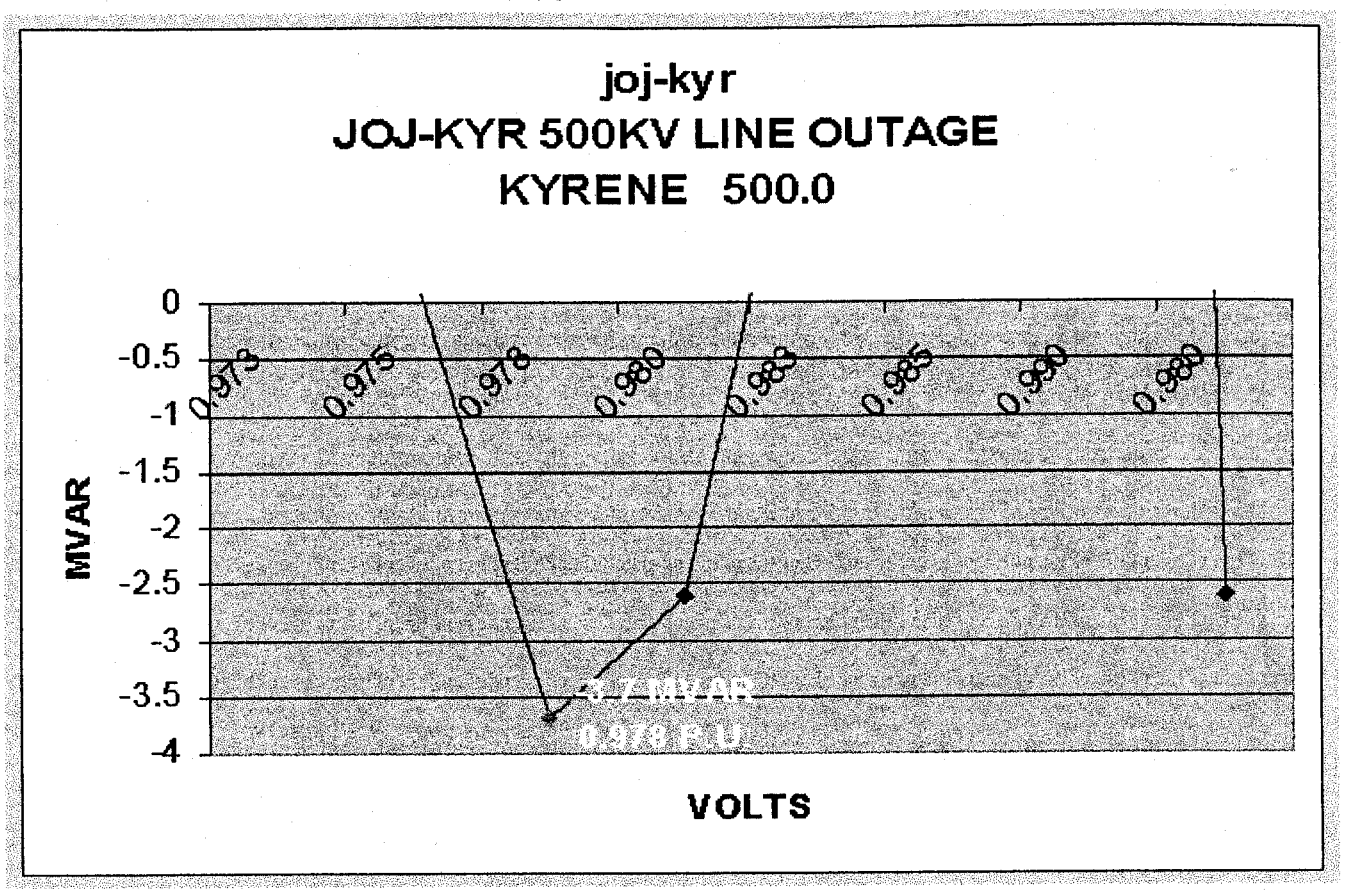

A50

VOLTS	MVAR
0.95	-2.98
0.9475	-3.07
0.945	1.09

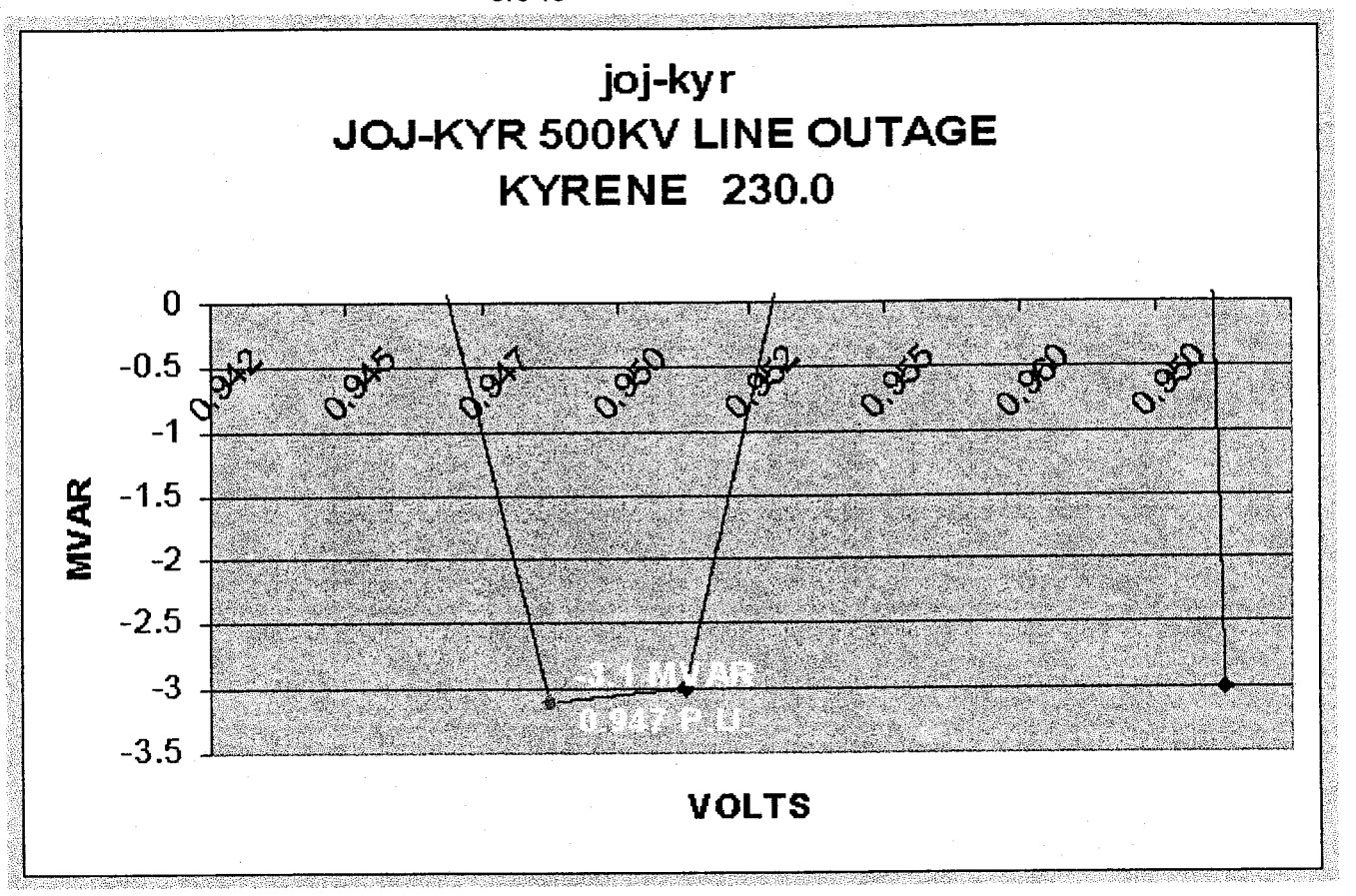

A51

VOLTS	MVAR
0.9225	-1.53
0.92	-2.79
0.9175	-1.85

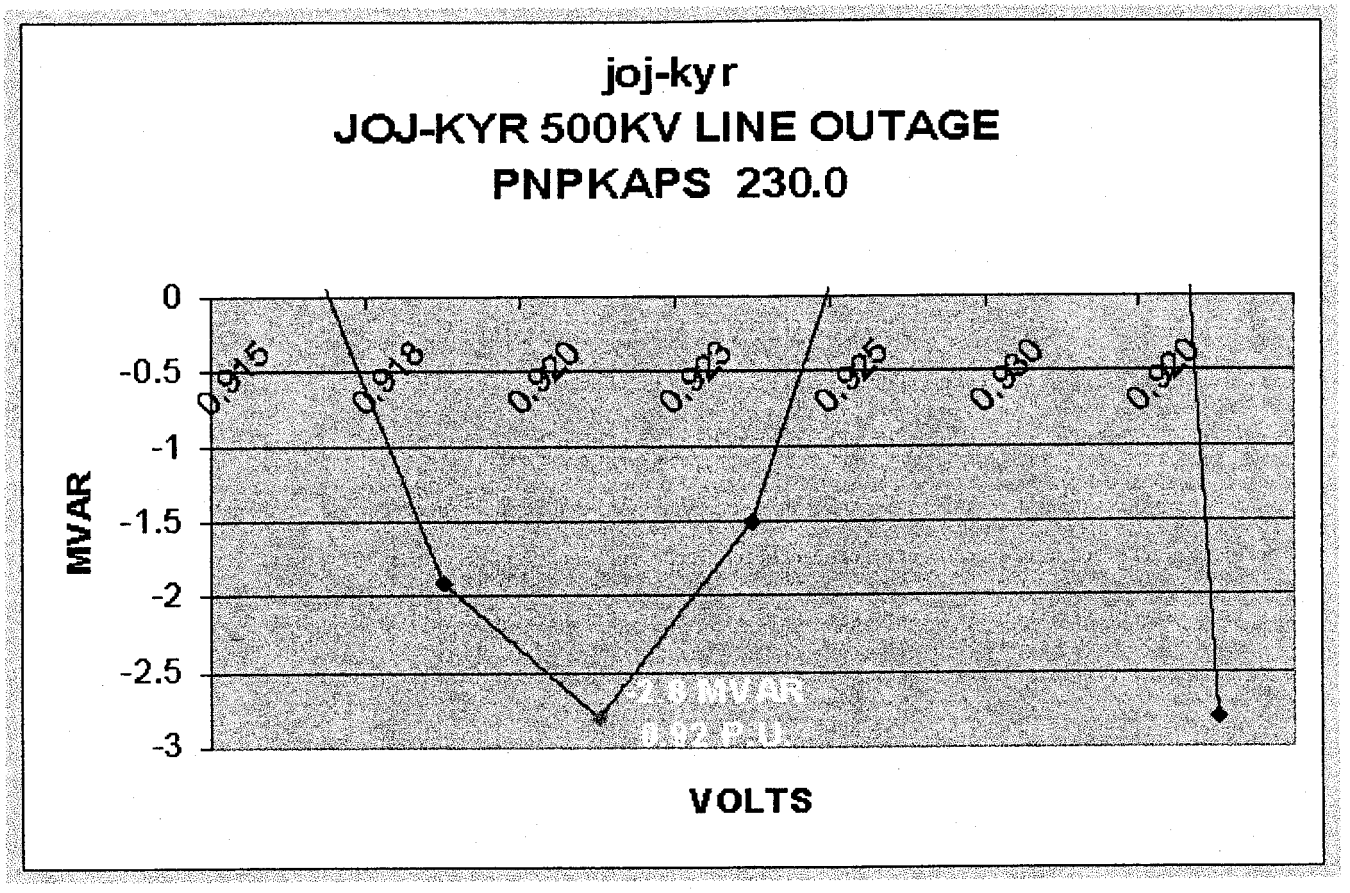

A52

VOLTS	MVAR
0.965	1.41
0.9625	-3.26
0.96	-2.76

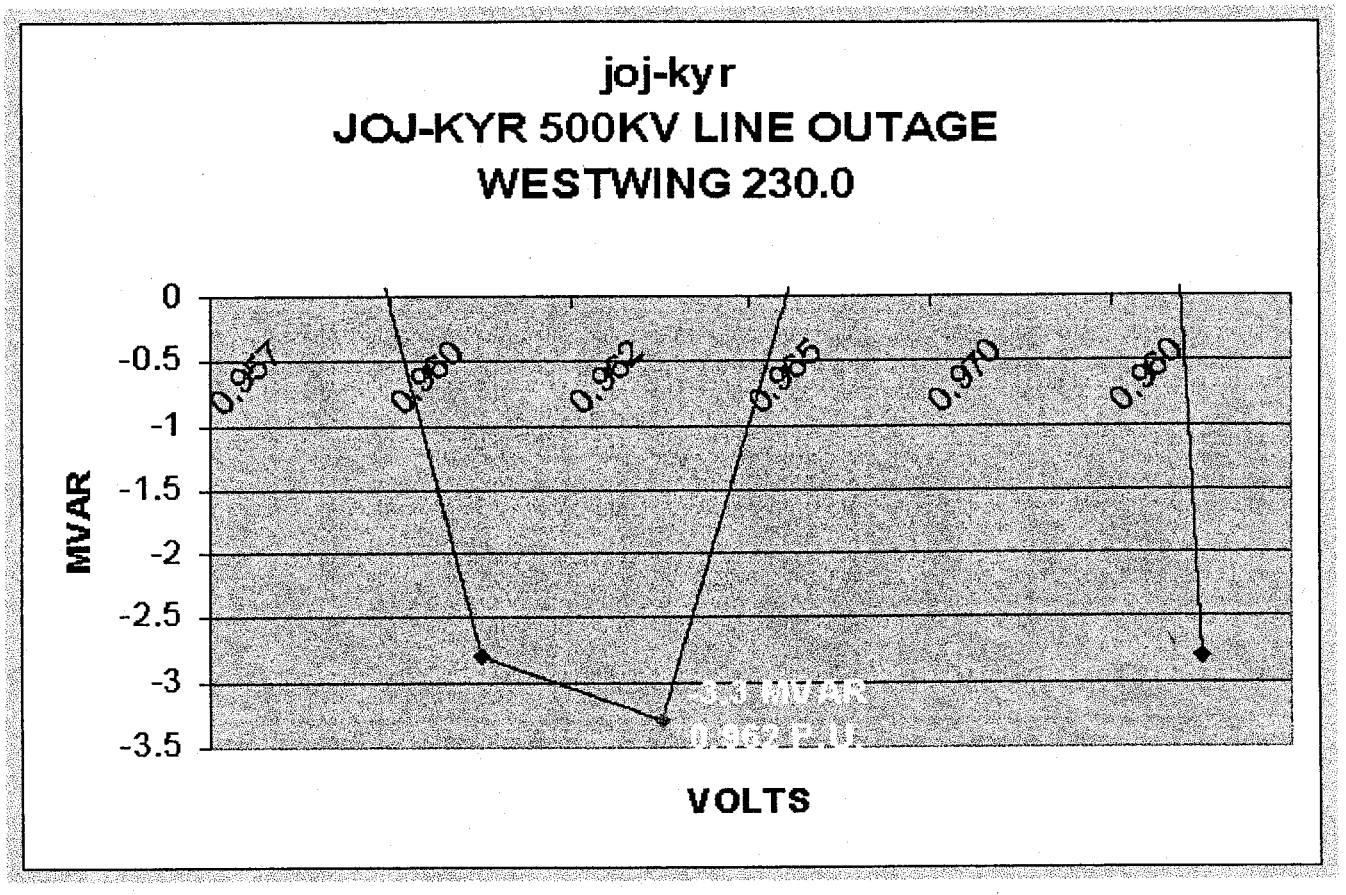

A53

A54

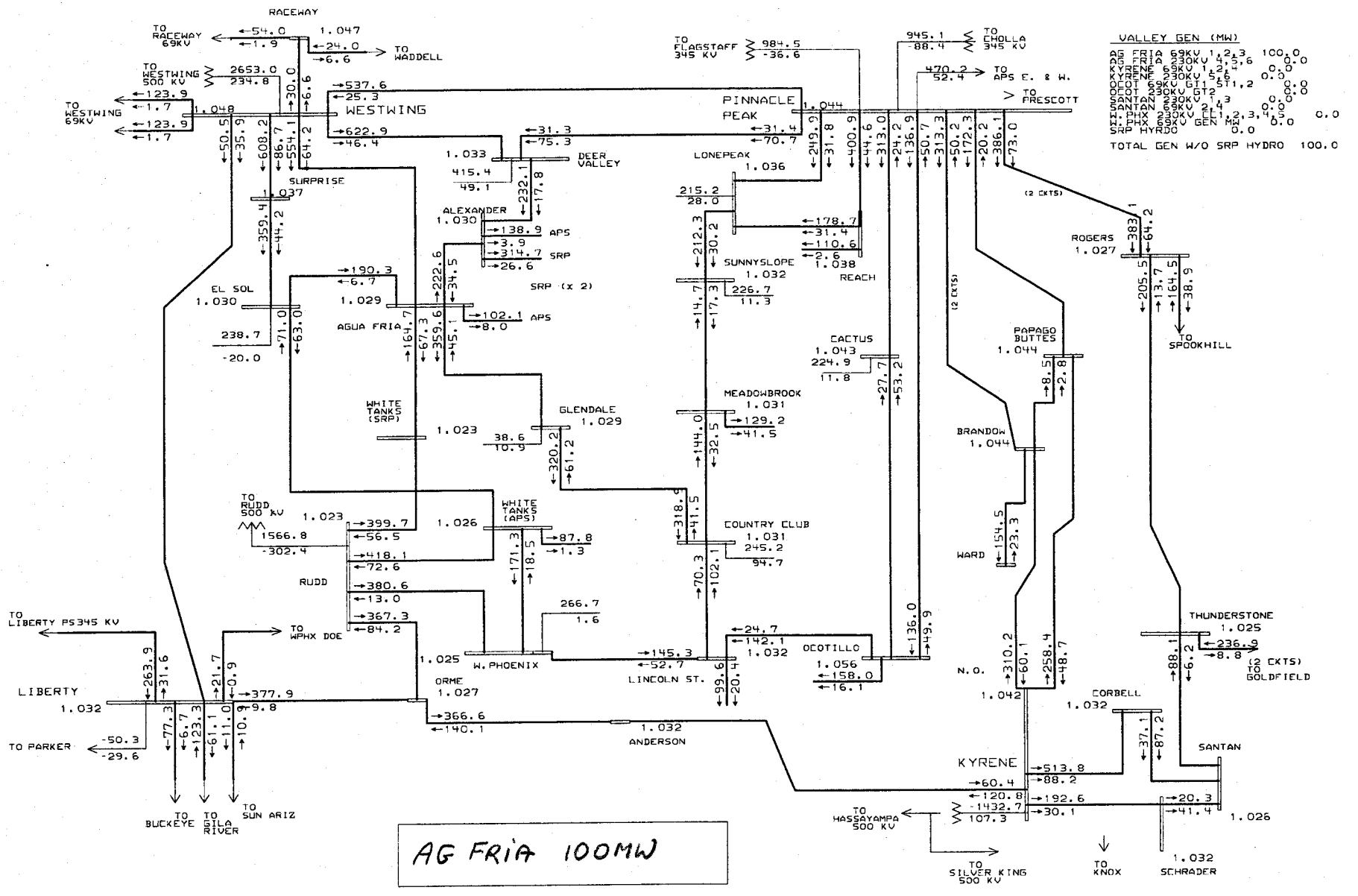

PHOENIX AREA 230KV SYSTEM

General Electric International, Inc. PSLF Program MW/MVAR Thu Jan 30 10:26:32 2003

Summer 2002 Coordinated Basecase ----- 3/11/2002
Arizona rep from VOP2001 basecase, WSCC Bulk case 2002hs3b
APS Rep updated as of 3/11/02. SRP Rep from VOP2001

2005zero_aguafr_100increase no var margin
final changes from APS,SRP,WAPA for 2005

c:\upslf131\w-area\met230_03a.
c:\upslf131\w-area\2005zero_ag
Rating = 2

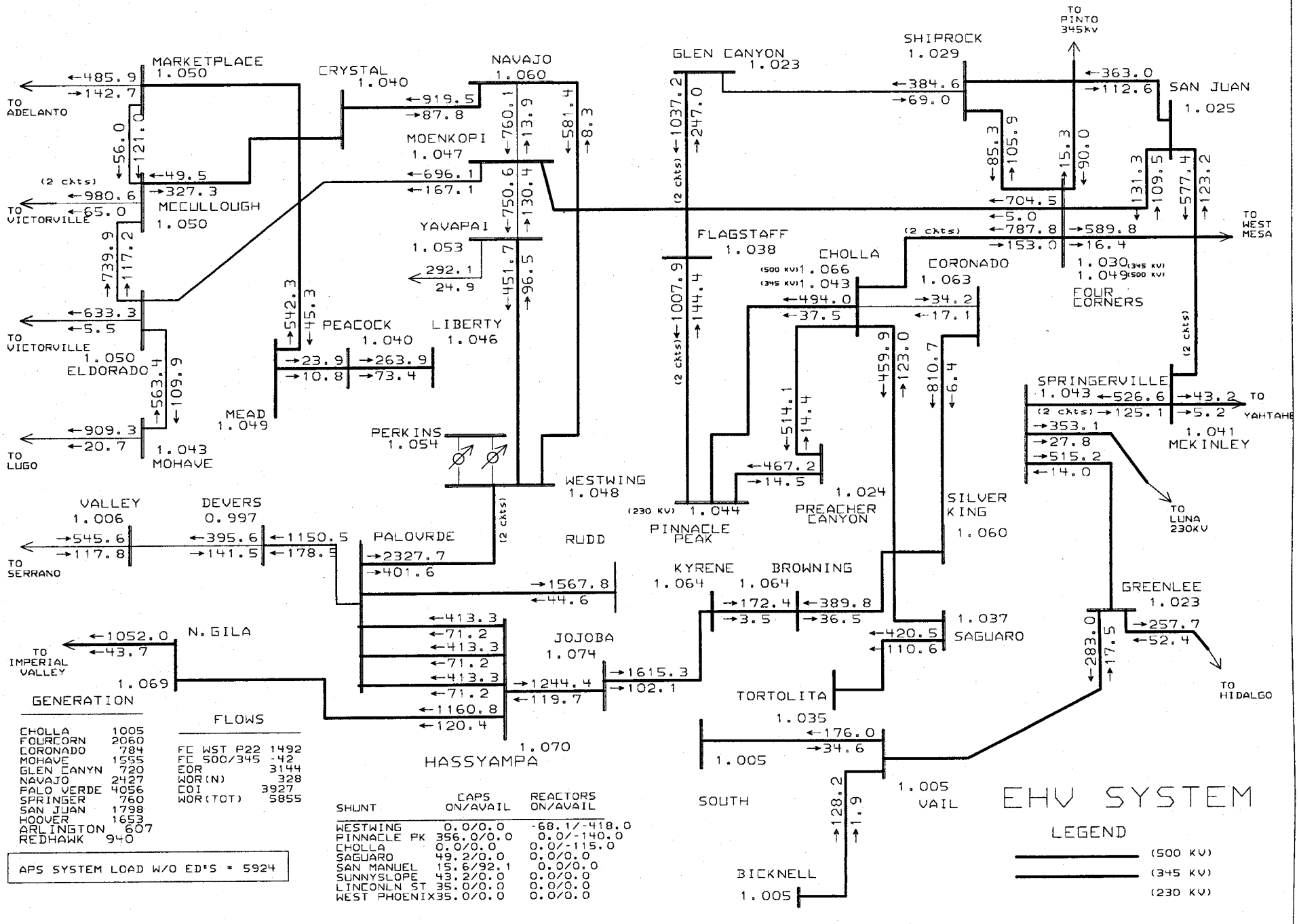

GENERATION

CHOLLA	1005
FOURCORN	2060
CORONADO	784
MOHAVE	1555
GLEN CANYN	720
NAVAJO	2427
PALO VERDE	4056
SPRINGER	760
SAN JUAN	1798
HOOVER	1653
ARLINGTON	607
REDHAWK	940

FLOWS

FC WST P22	1492
FC 500/345	-42
EOR	3144
WOR(N)	328
COI	3927
WOR(TOT)	5855

APS SYSTEM LOAD W/O ED'S = 5924

SHUNT	CAPS ON/AVAIL	REACTORS ON/AVAIL
WESTWING	0.0/0.0	-68.1/-418.0
PINNACLE PK	356.0/0.0	0.0/-140.0
CHOLLA	0.0/0.0	0.0/-115.0
SAGUARO	49.2/0.0	0.0/0.0
SAN MANUEL	15.6/92.1	0.0/0.0
SUNNYSLOPE	43.2/0.0	0.0/0.0
LINCONLN ST	35.0/0.0	0.0/0.0
WEST PHOENIX	35.0/0.0	0.0/0.0

A55

General Electric International, Inc. PSLF Program

MW/MVAR Thu Jan 30 10:26:22 2003

Summer 2002 Coordinated Basecase ----- 3/11/2002
Arizona rep from VOP2001 basecase, WSCC Bulk case 2002hs3b
APS Rep updated as of 3/11/02. SRP Rep from VOP2001

2005zero_aguafr_100increase no var margin
final changes from APS,SRP,WAPA for 2005

c:\upslf131\w-area\ehv03.drw
c:\upslf131\w-area\2005zero_ag
Rating = 2

VOLTS	MVAR
0.935	-14.34
0.9325	-15.15
0.93	-15.04

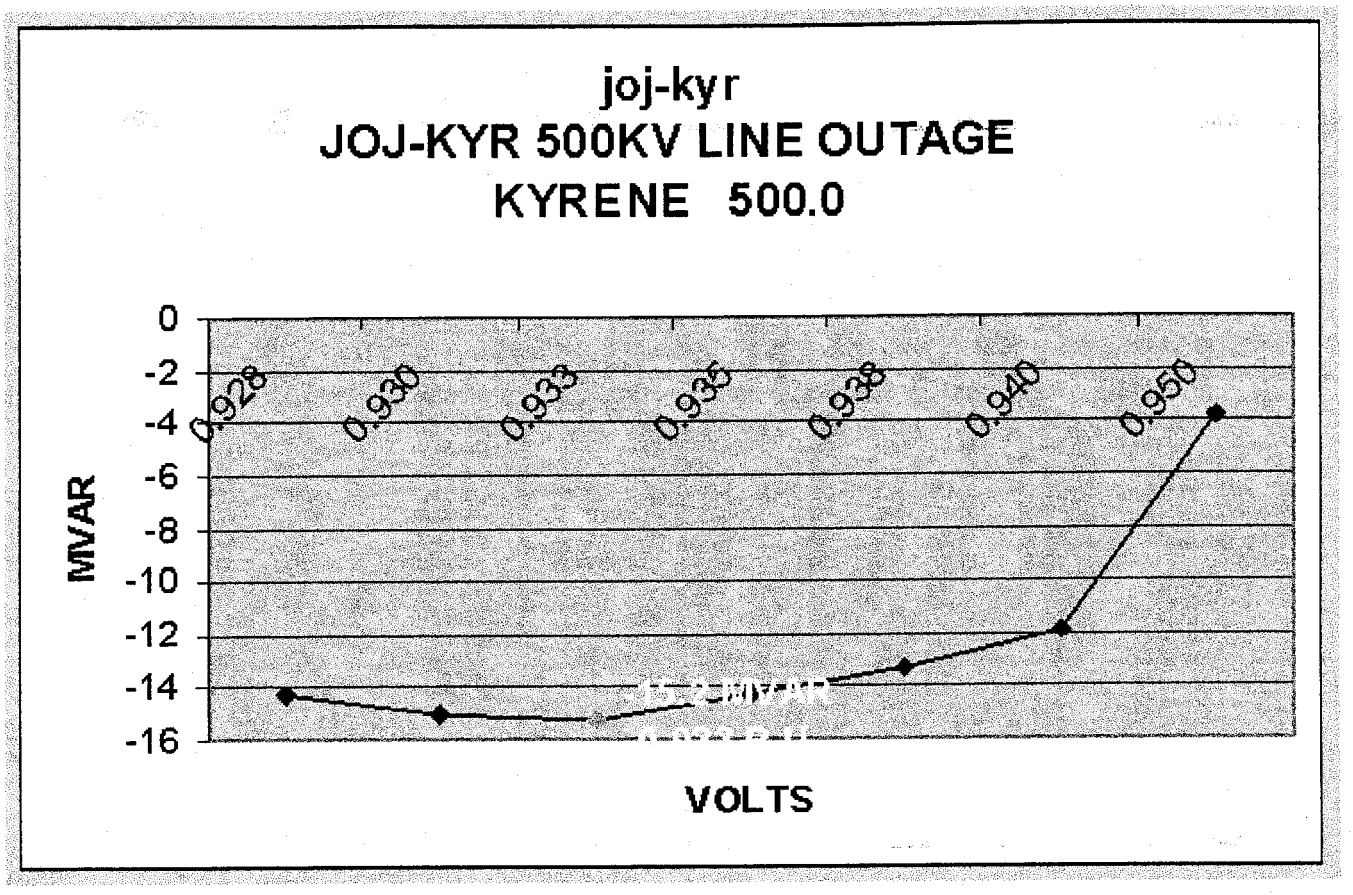

A56

VOLTS	MVAR
0.9125	-14.74
0.91	-15.44
0.9075	-14.89

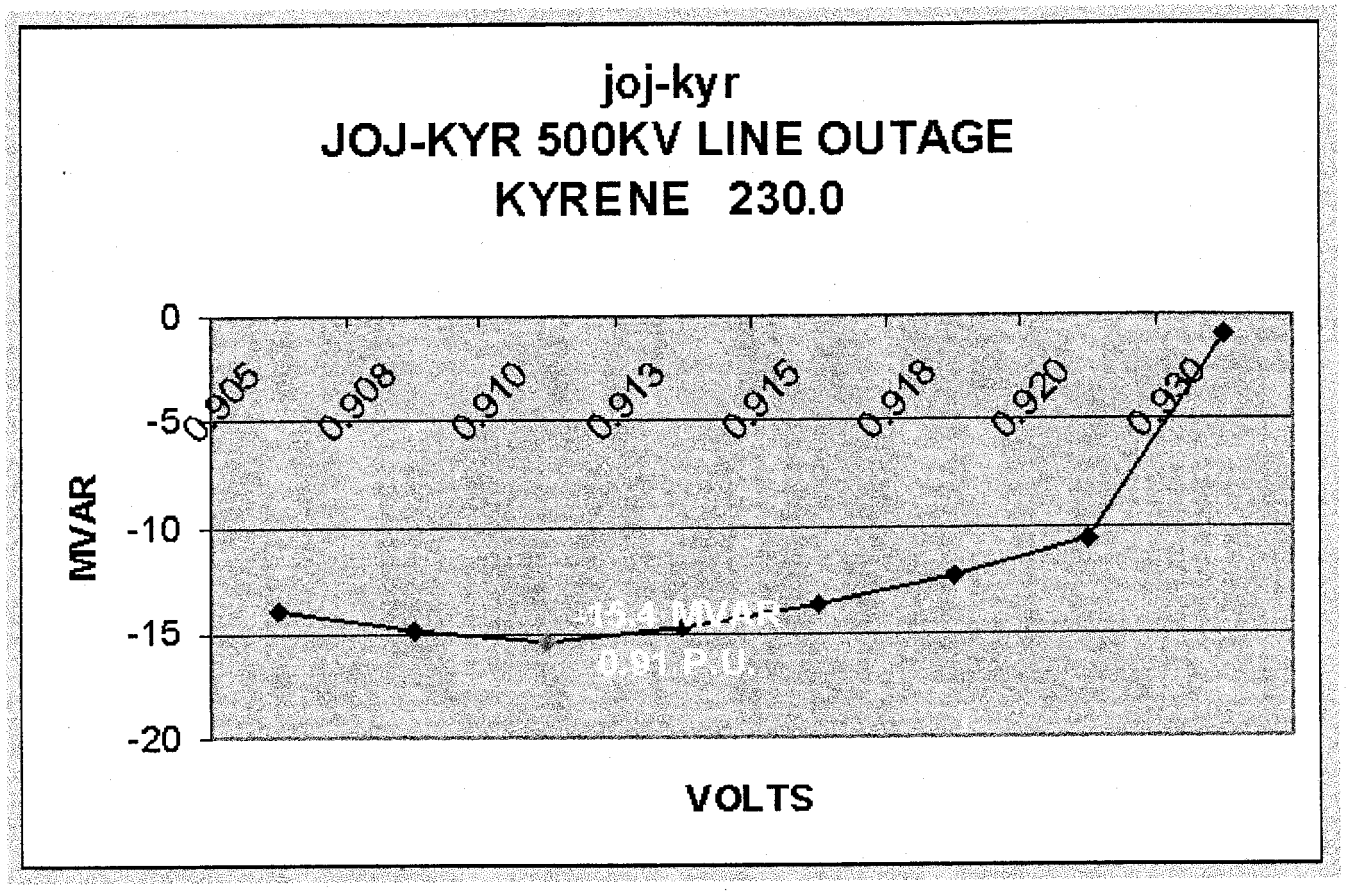

A57

VOLTS	MVAR
0.9325	-16.95
0.93	-17.34
0.9275	-16.47

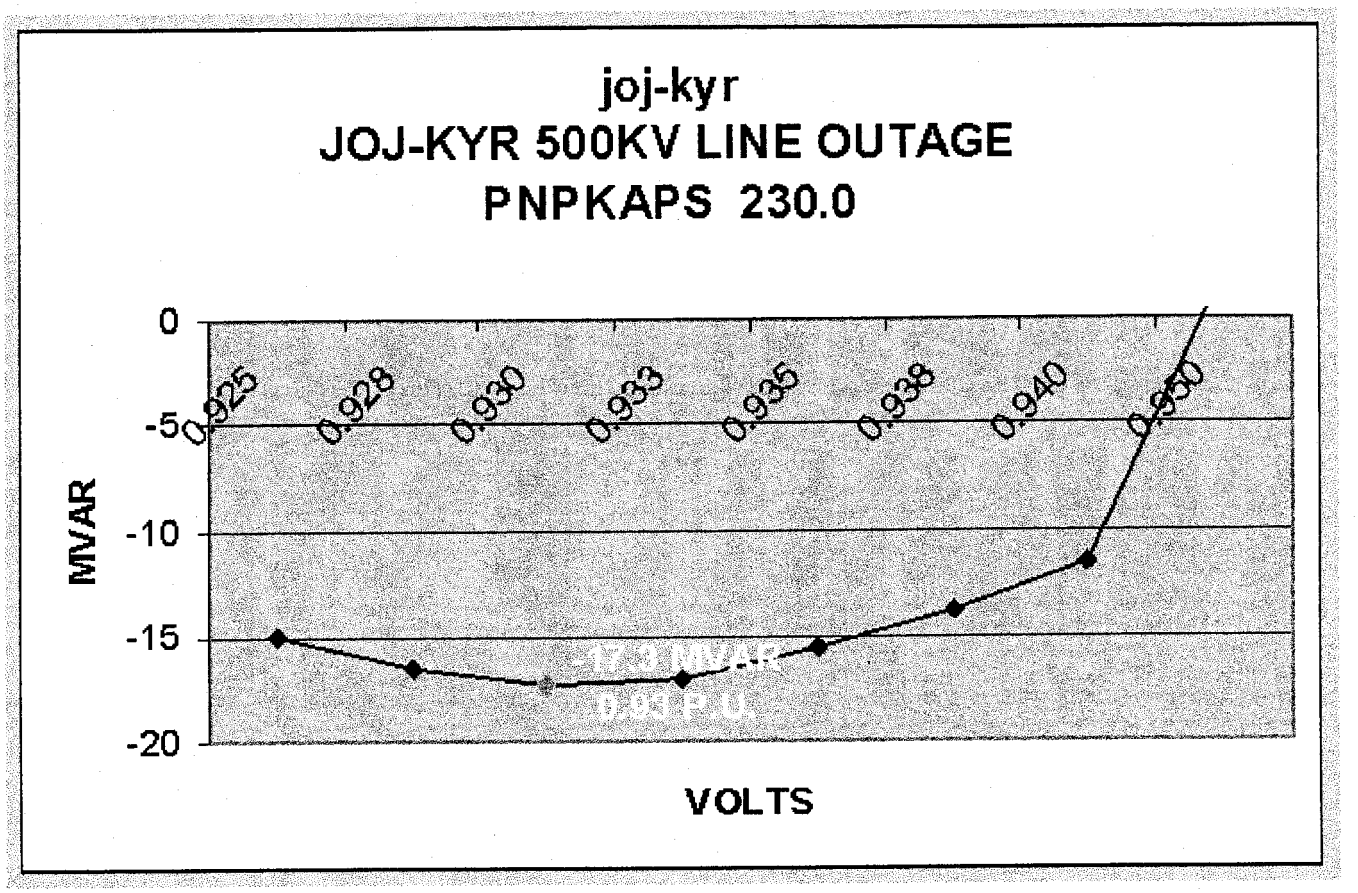

A58

VOLTS	MVAR
0.98	-5.04
0.97	-24.93
0.9675	-24.37

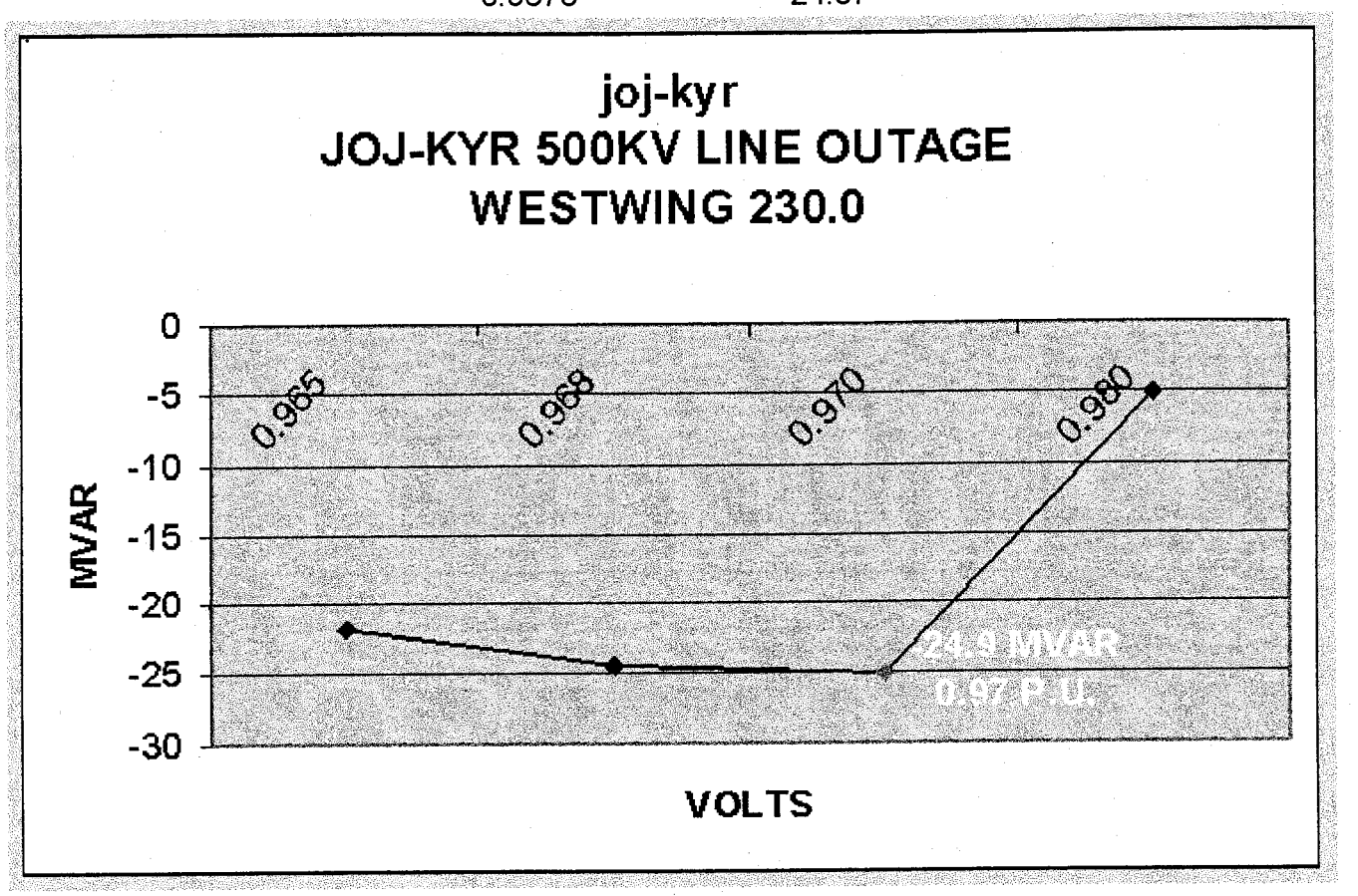

A59

A60

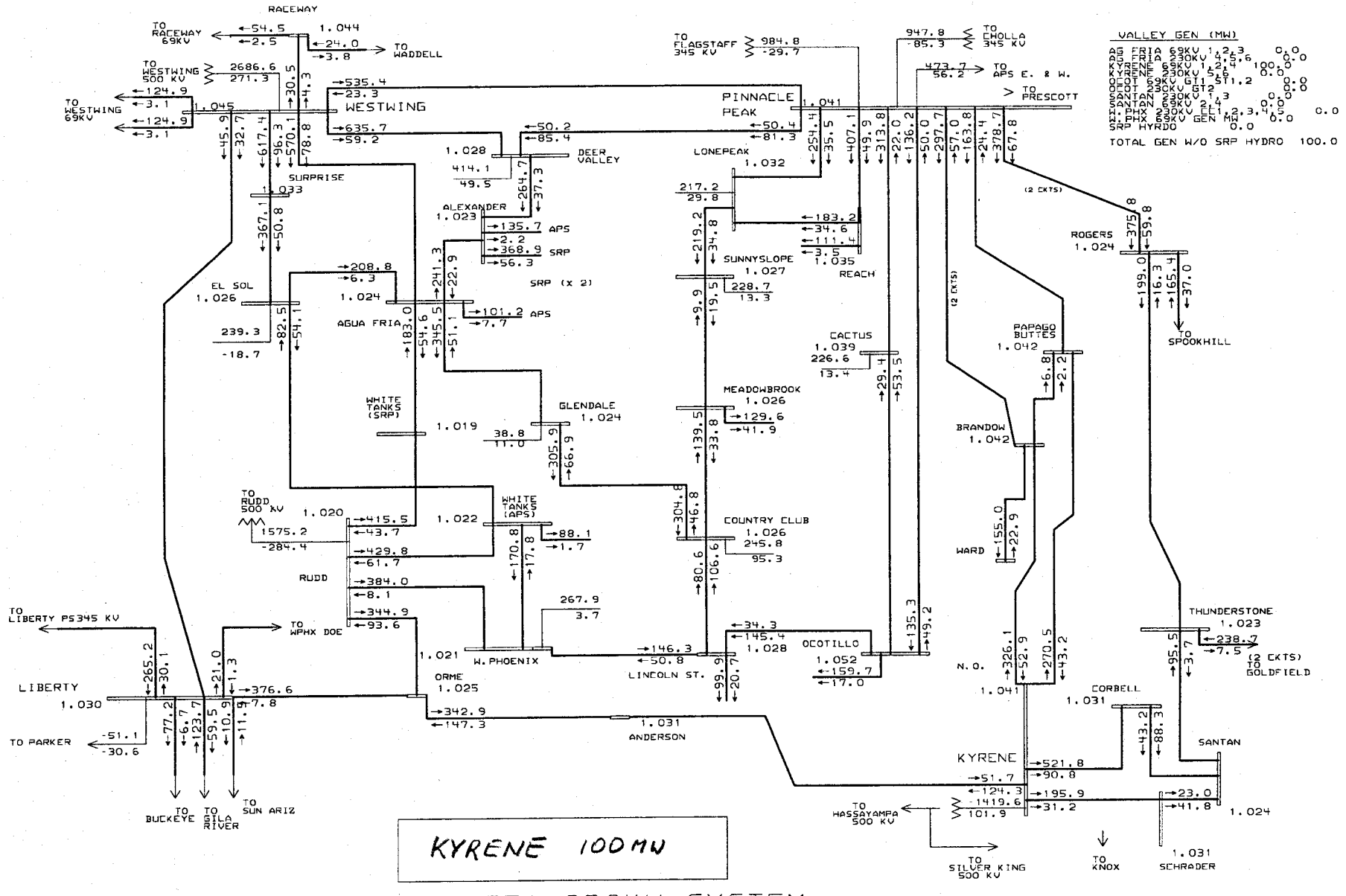

KYRENE 100MW

PHOENIX AREA 230KV SYSTEM

General Electric International, Inc. PSLF Program MW/MVAR Thu Jan 30 10:39:23 2003

Summer 2002 Coordinated Basecase ----- 3/11/2002
Arizona rep from VOP2001 basecase, WSCC Bulk case 2002hs3b
APS Rep updated as of 3/11/02. SRP Rep from VOP2001

2005zero_kyrene_100increase no var margin
final changes from APS,SRP,WAPA for 2005

c:\upslf131\w-area\met230_03a.
c:\upslf131\w-area\2005zero_ky
Rating = 2

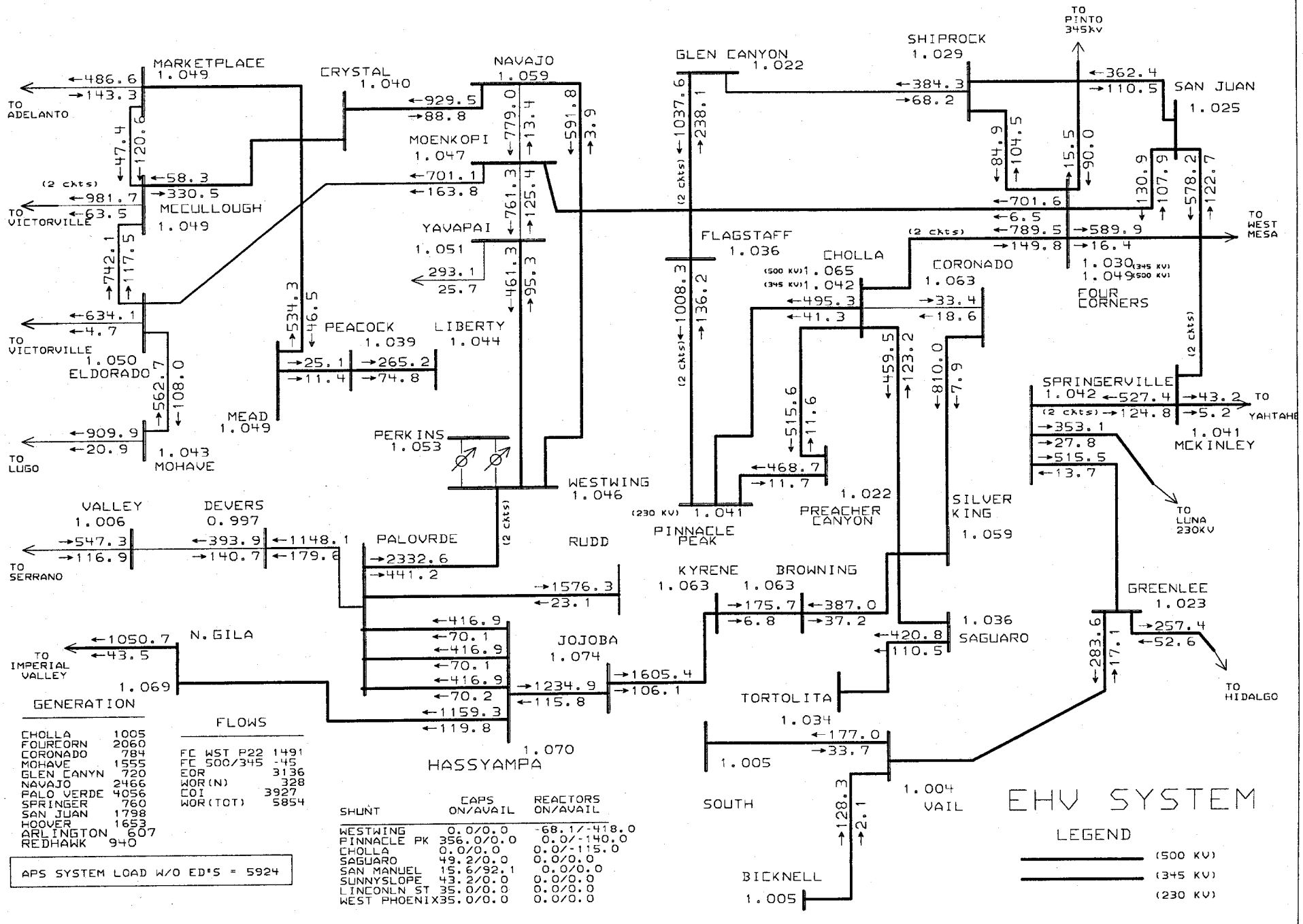

A61

General Electric International, Inc. PSLF Program

Summer 2002 Coordinated Basecase ----- 3/11/2002
Arizona rep from VOP2001 basecase, WSCC Bulk case 2002hs3b
APS Rep updated as of 3/11/02. SRP Rep from VOP2001

2005zero_kyrene_100increase no var margin
final changes from APS,SRP,WAPA for 2005

MW/MVAR Thu Jan 30 10:39:15 2003

c:\upslf131\w-area\ehv03.drw
c:\upslf131\w-area\2005zero_ky
Rating = 2

VOLTS	MVAR
0.9425	-12.48
0.94	-13.03
0.9375	-12.84

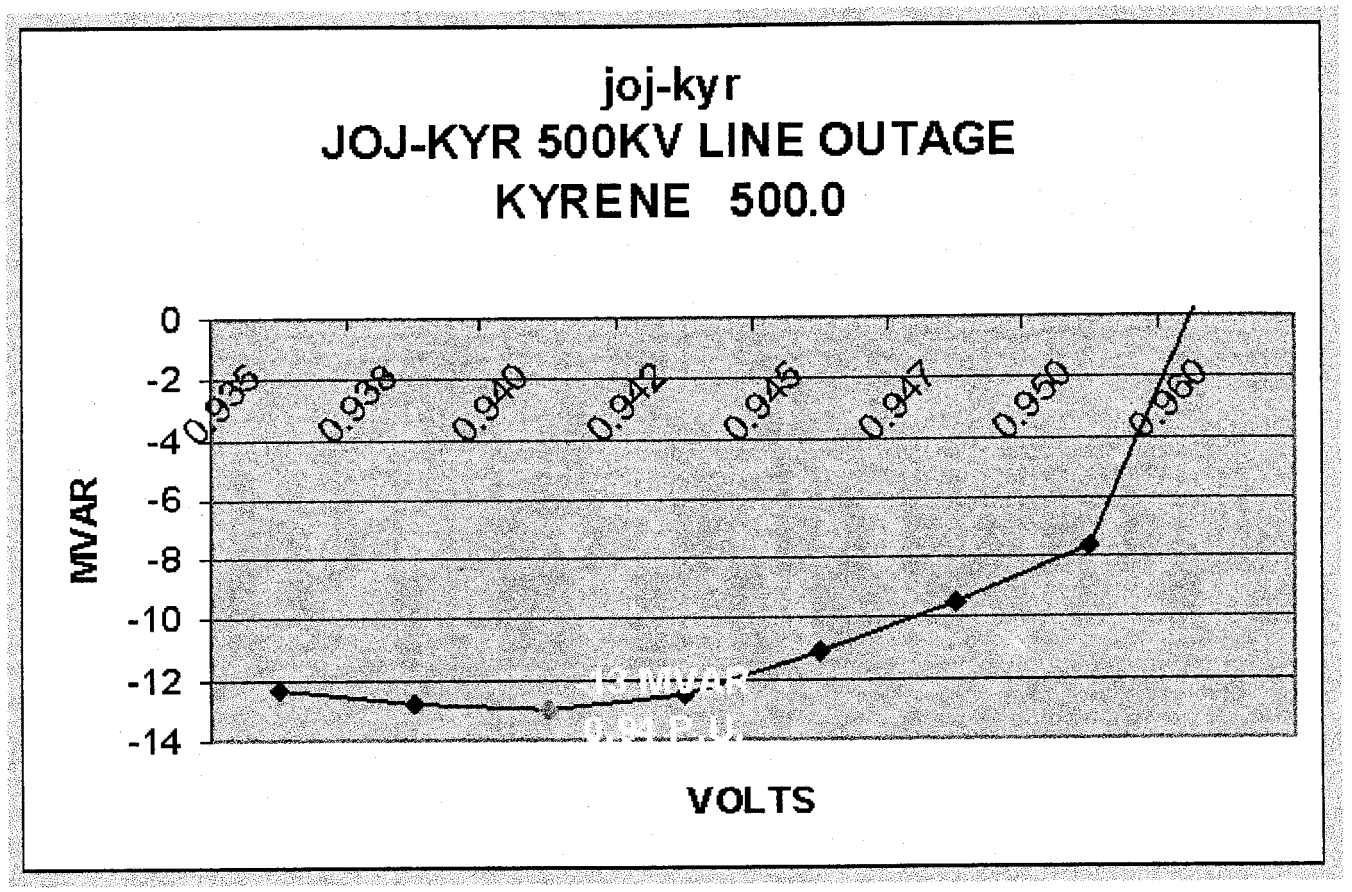

A62

VOLTS	MVAR
0.92	-12.99
0.9175	-13.09
0.915	-12.74

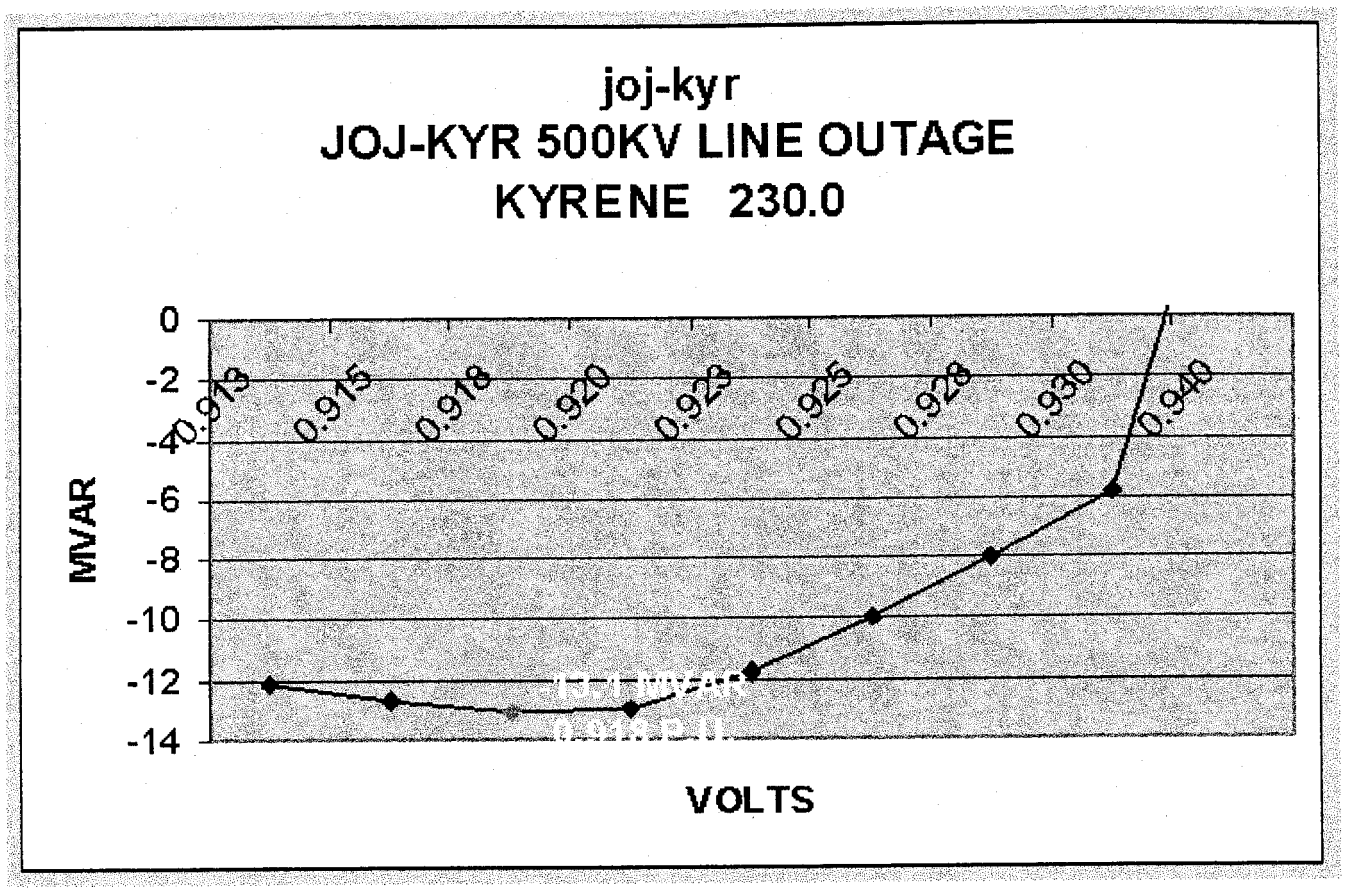

A63

VOLTS	MVAR
0.935	-13.63
0.9325	-14.53
0.93	-14.30

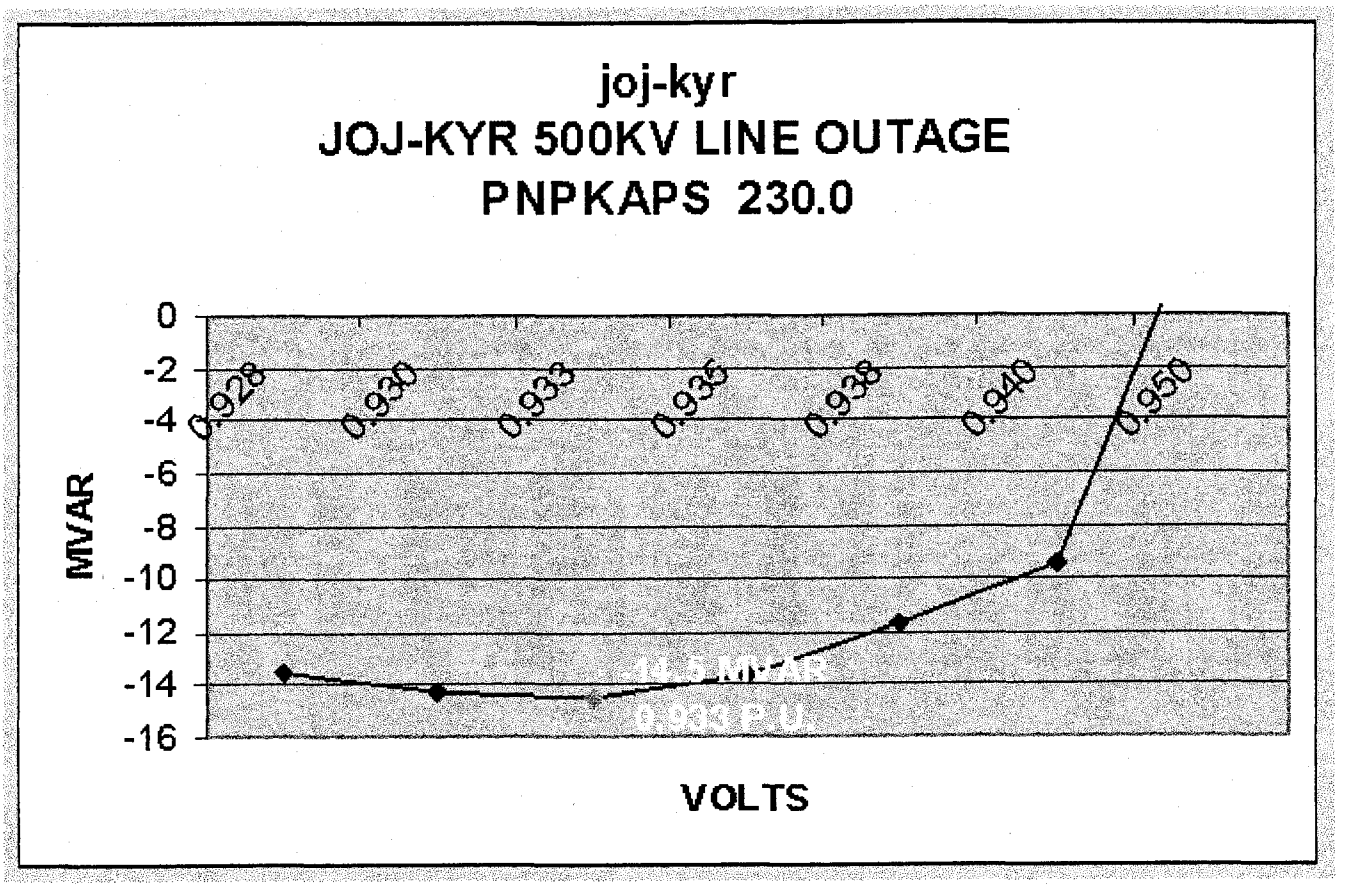

A 64

VOLTS	MVAR
0.97	-19.23
0.9675	-20.56
0.965	-19.70

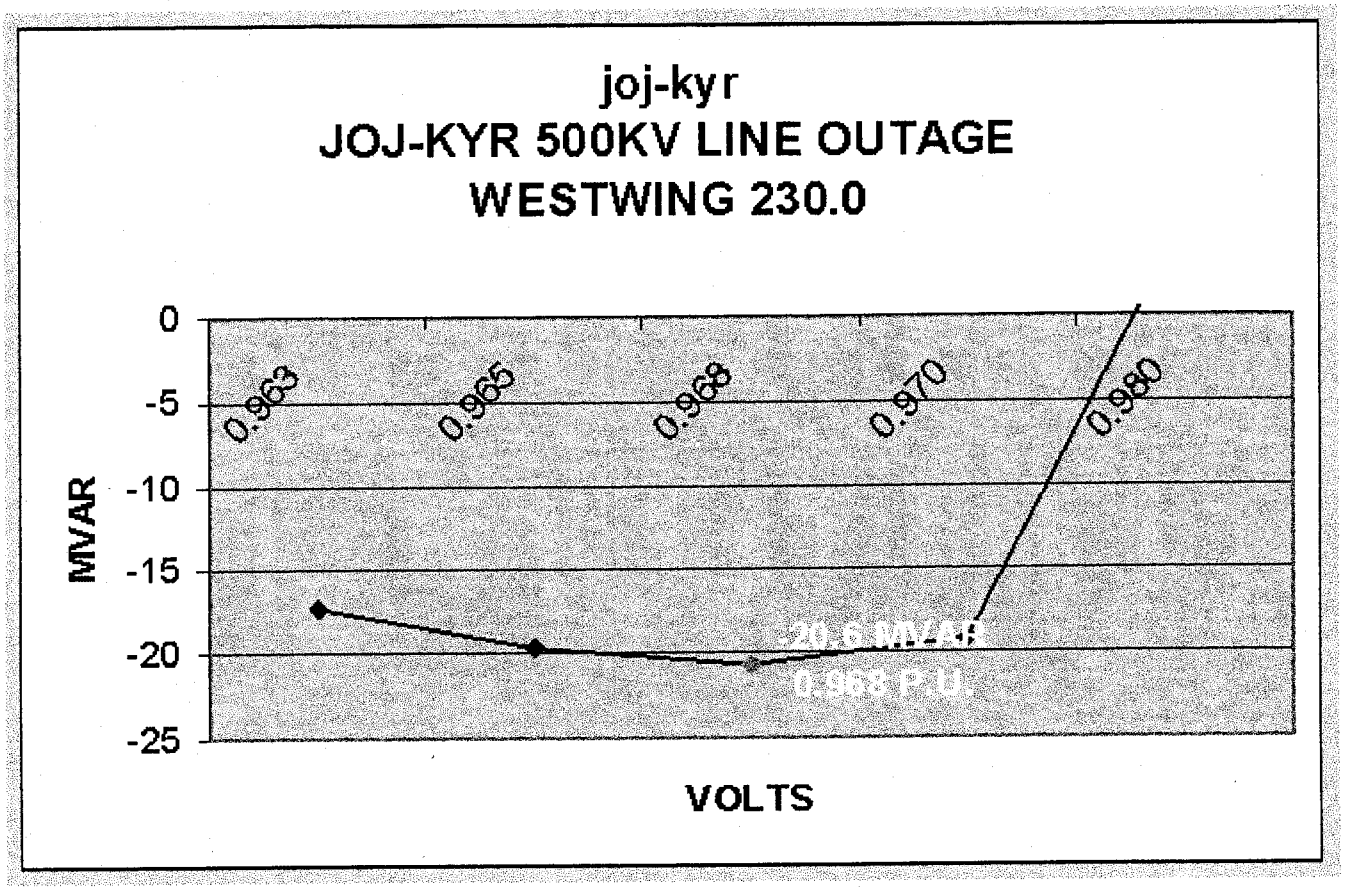

A65

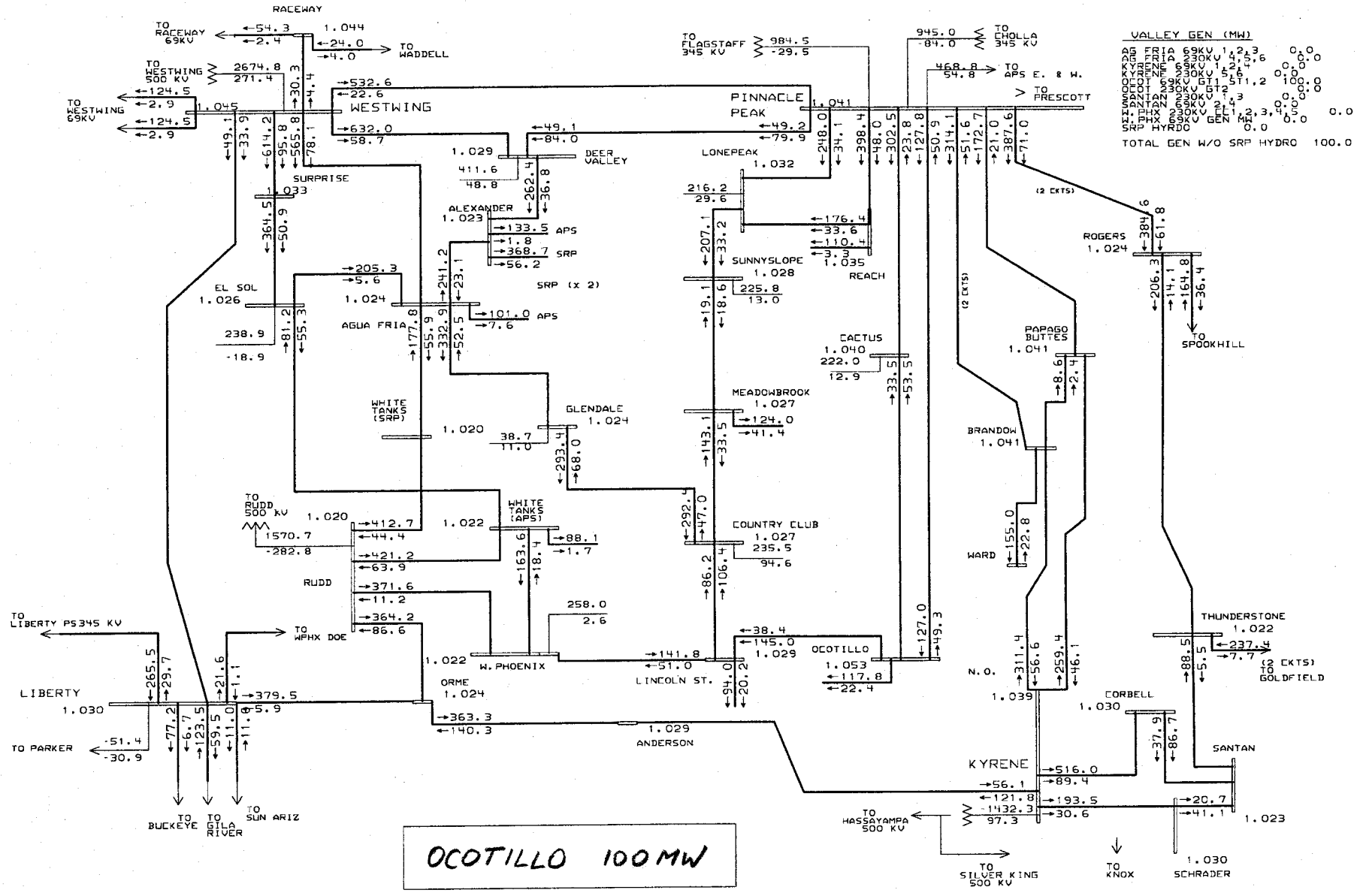

OCOTILLO 100 MW

PHOENIX AREA 230KV SYSTEM

A66

General Electric International, Inc. PSLF Program

Summer 2002 Coordinated Basecase ----- 3/11/2002
Arizona rep from VOP2001 basecase, WSCC Bulk case 2002hs3b
APS Rep updated as of 3/11/02. SRP Rep from VOP2001

2005zero_oct_100increase no var margin
final changes from APS,SRP,WAPA for 2005

MW/MVAR Thu Jan 30 10:36:45 2003

c:\upslf131\w-area\met230_03a.
c:\upslf131\w-area\2005zero_oc
Rating = 2

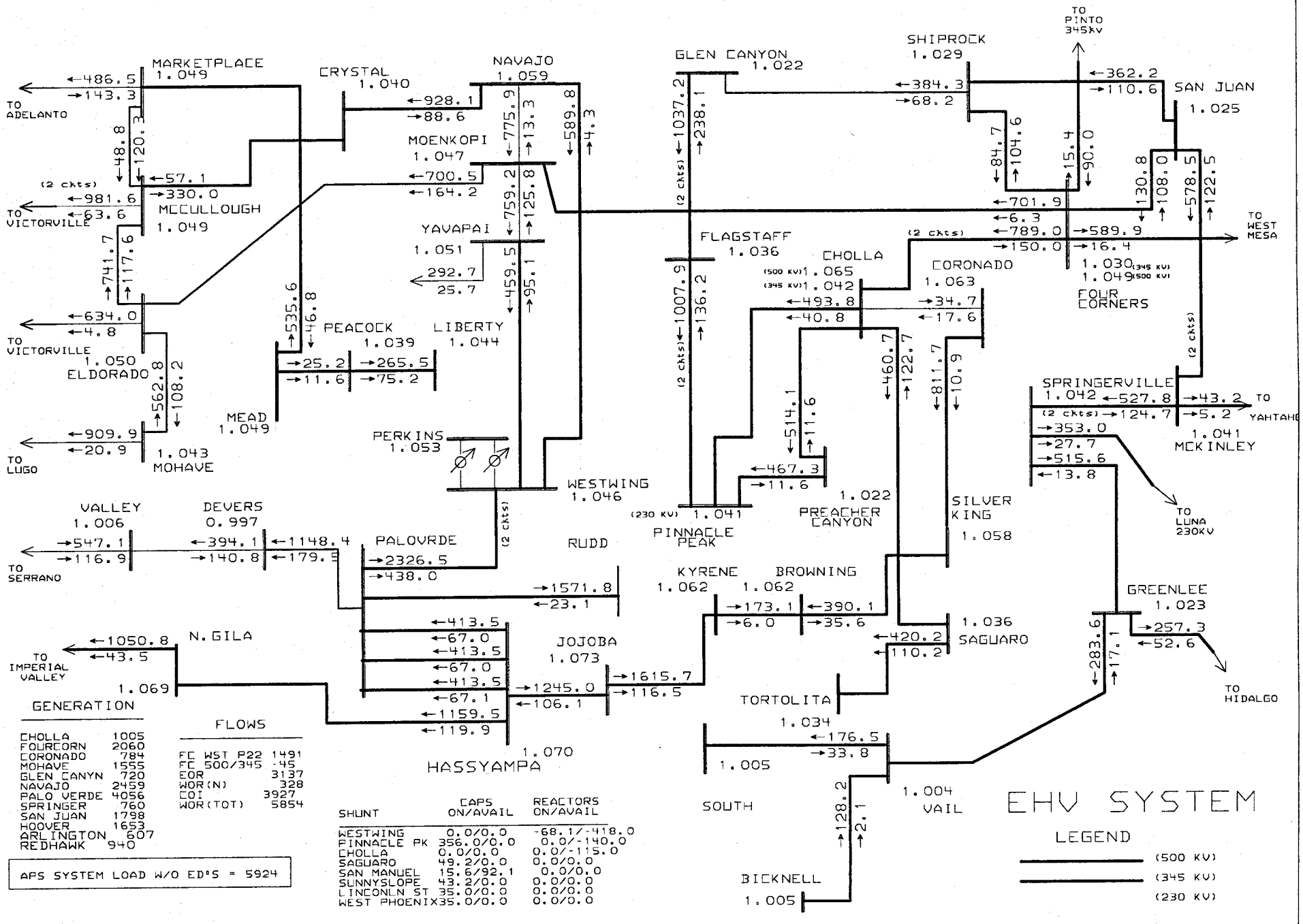

GENERATION

CHOLLA	1005
FOURCORN	2060
CORONADO	784
MOHAVE	1555
GLEN CANYN	720
NAVAJO	2459
PALO VERDE	4056
SPRINGER	760
SAN JUAN	1798
HOOVER	1653
ARLINGTON	607
REDHAWK	940

FLOWS

FC WST P22	1491
FC 500/345	-45
EOR	3137
WOR(N)	328
COI	3927
WOR(TOT)	5854

APS SYSTEM LOAD W/O ED'S = 5924

SHUNT	CAPS ON/AVAIL	REACTORS ON/AVAIL
WESTWING	0.0/0.0	-68.1/-418.0
PINNACLE PK	356.0/0.0	0.0/-140.0
CHOLLA	0.0/0.0	0.0/-115.0
SAGUARO	49.2/0.0	0.0/0.0
SAN MANUEL	15.6/92.1	0.0/0.0
SUNNYSLOPE	43.2/0.0	0.0/0.0
LINCONLN ST	35.0/0.0	0.0/0.0
WEST PHOENIX	35.0/0.0	0.0/0.0

A67

General Electric International, Inc. PSLF Program

MW/MVAR Thu Jan 30 10:36:35 2003

Summer 2002 Coordinated Basecase ----- 3/11/2002
Arizona rep from VOP2001 basecase, WSCC Bulk case 2002hs3b
APS Rep updated as of 3/11/02. SRP Rep from VOP2001

2005zero_oct_100increse no var margin
final changes from APS,SRP,WAPA for 2005

c:\upslf131\w-area\ehv03.drw
c:\upslf131\w-area\2005zero_oc
Rating = 2

VOLTS	MVAR
0.935	-15.99
0.9325	-16.19
0.93	-15.79

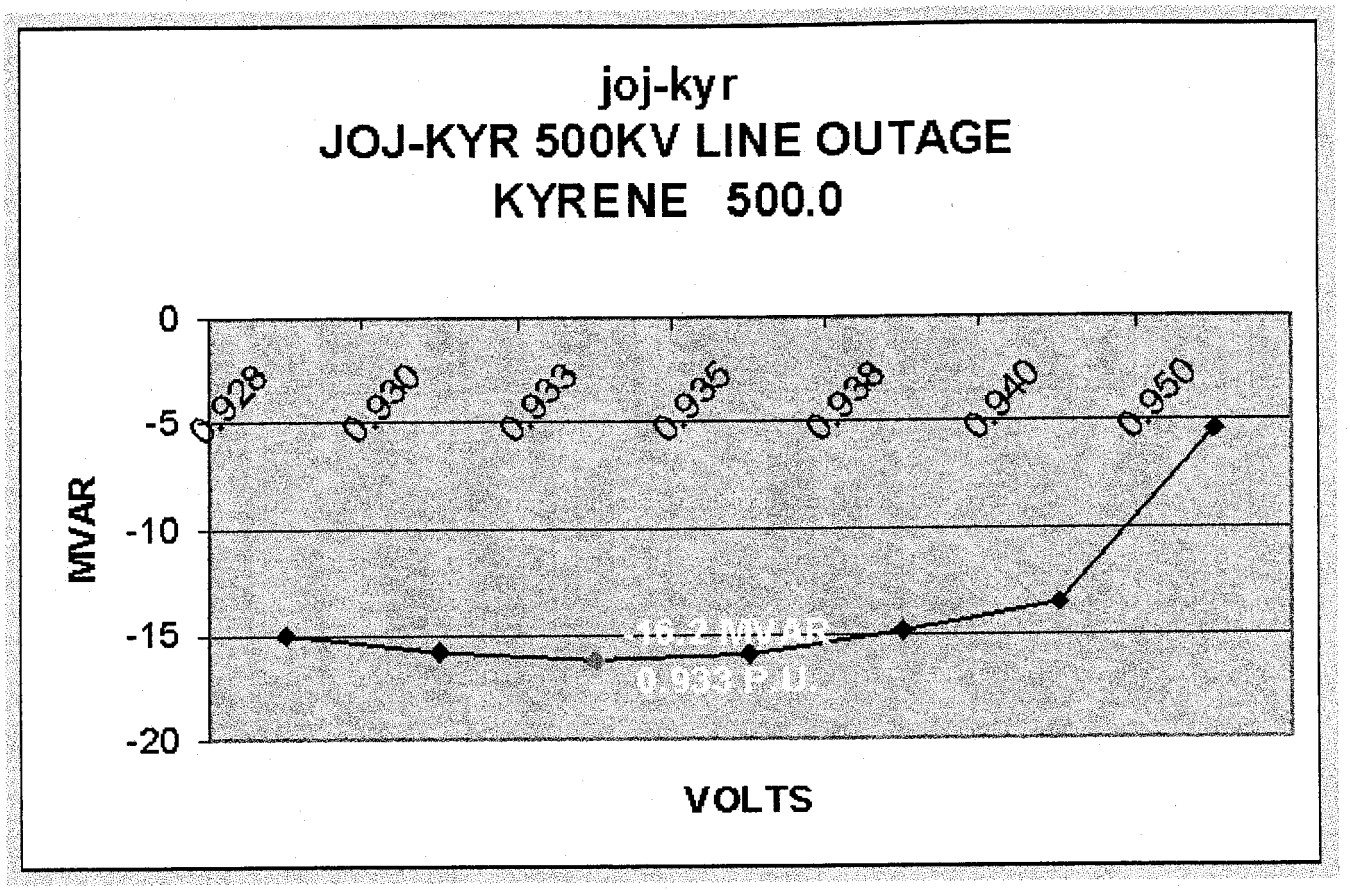

A68

VOLTS	MVAR
0.935	-17.75
0.9325	-18.54
0.93	-18.12

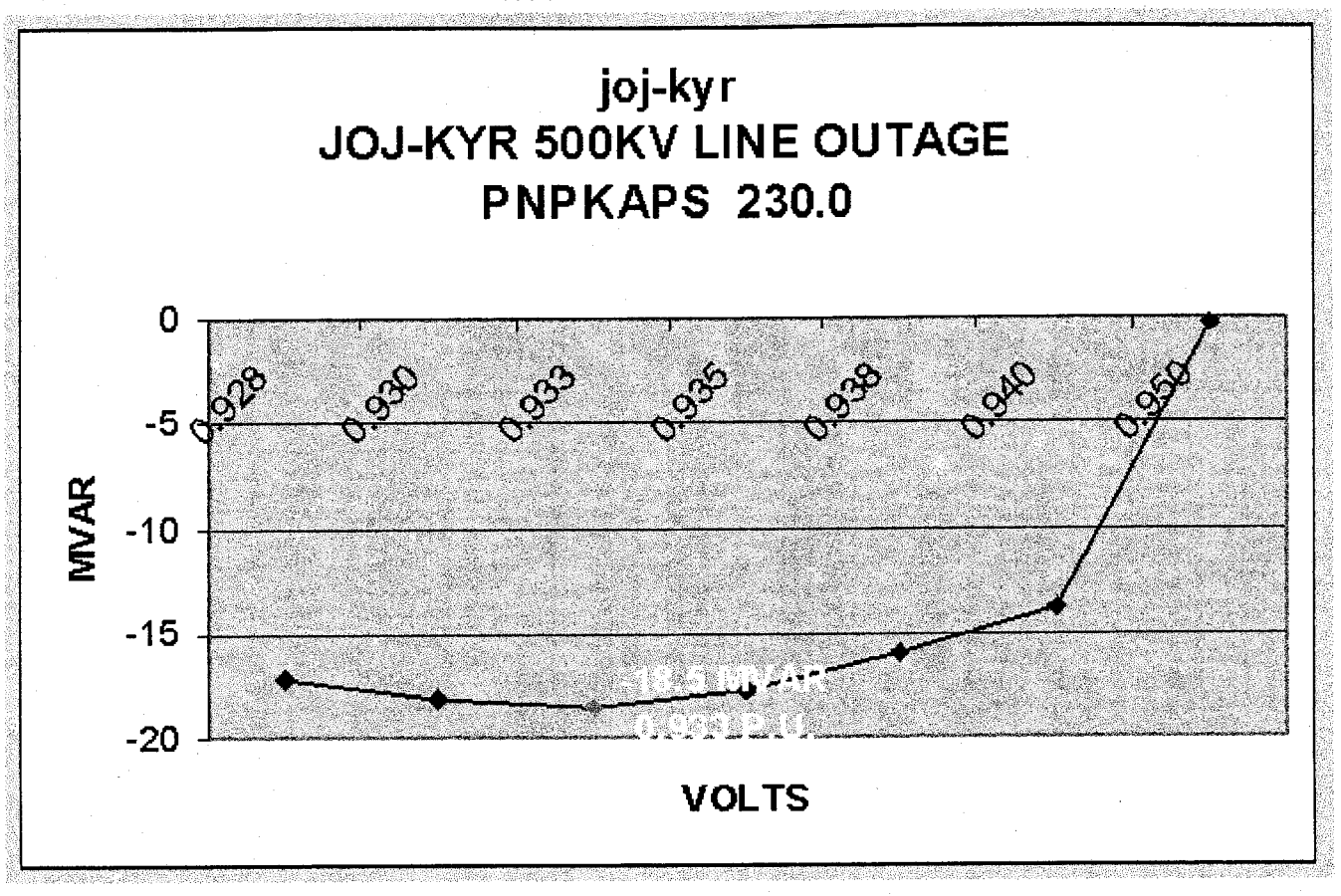

A 70

VOLTS	MVAR
0.97	-25.47
0.9675	-26.28
0.965	-24.89

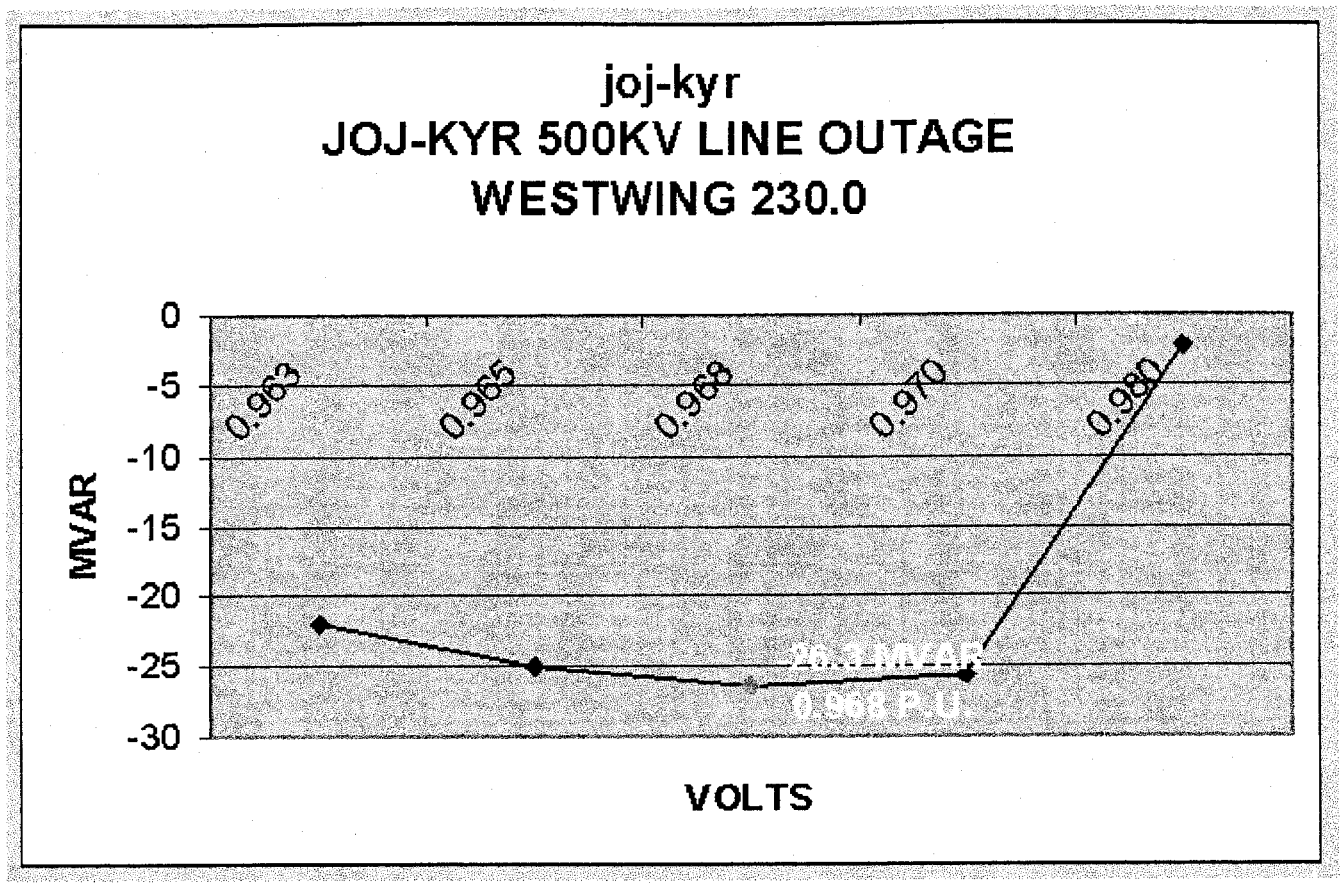

A71

A72

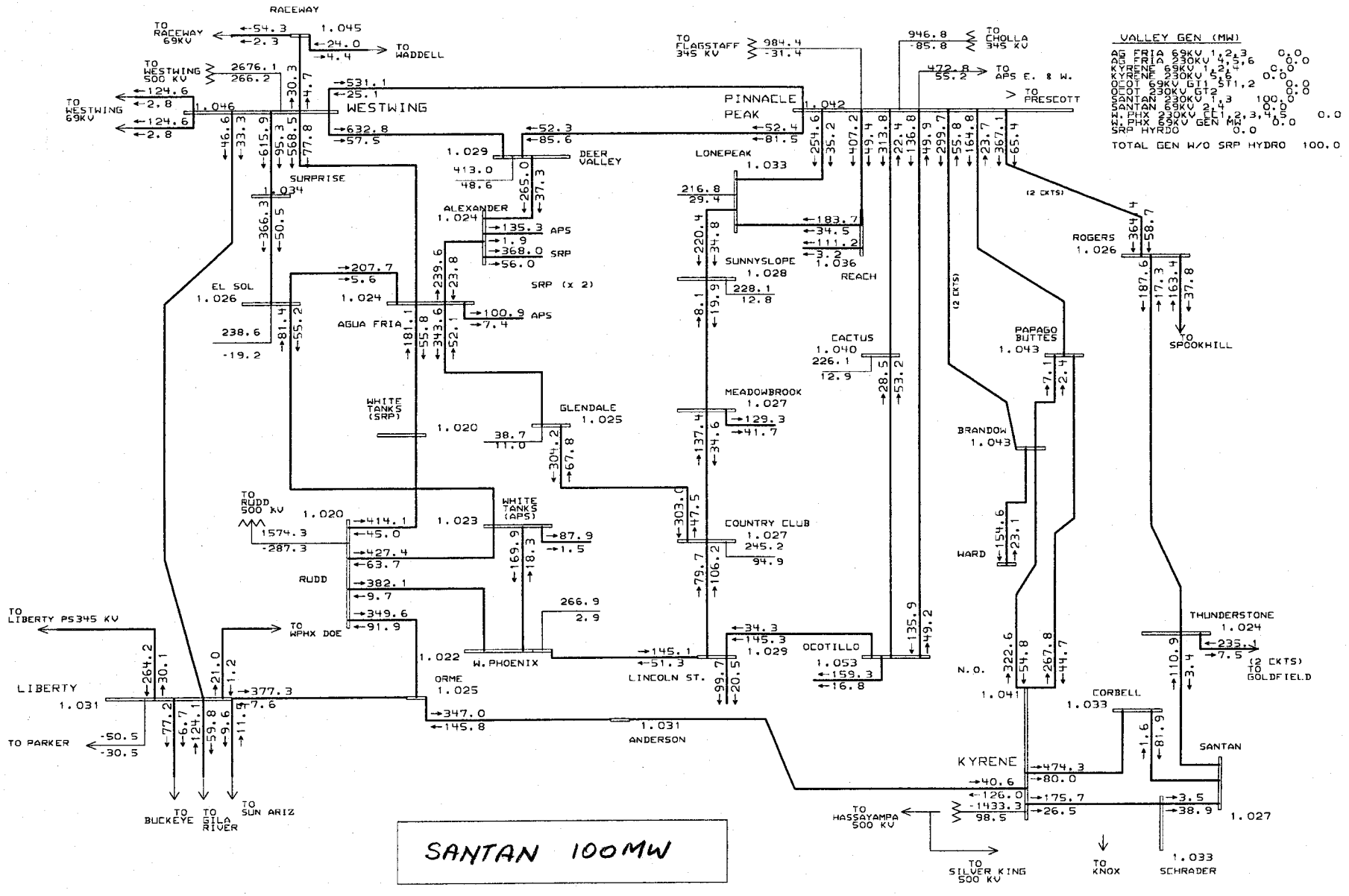

PHOENIX AREA 230KV SYSTEM

General Electric International, Inc. PSLF Program MW/MVAR Thu Jan 30 10:30:00 2003

Summer 2002 Coordinated Basecase ----- 3/11/2002
Arizona rep from VOP2001 basecase, WSCC Bulk case 2002hs3b
APS Rep updated as of 3/11/02. SRP Rep from VOP2001

2005zero_sant_100increase no var margin
final changes from APS,SRP,WAPA for 2005

c:\upslf131\w-area\met230_03a.
c:\upslf131\w-area\2005zero_sa
Rating = 2

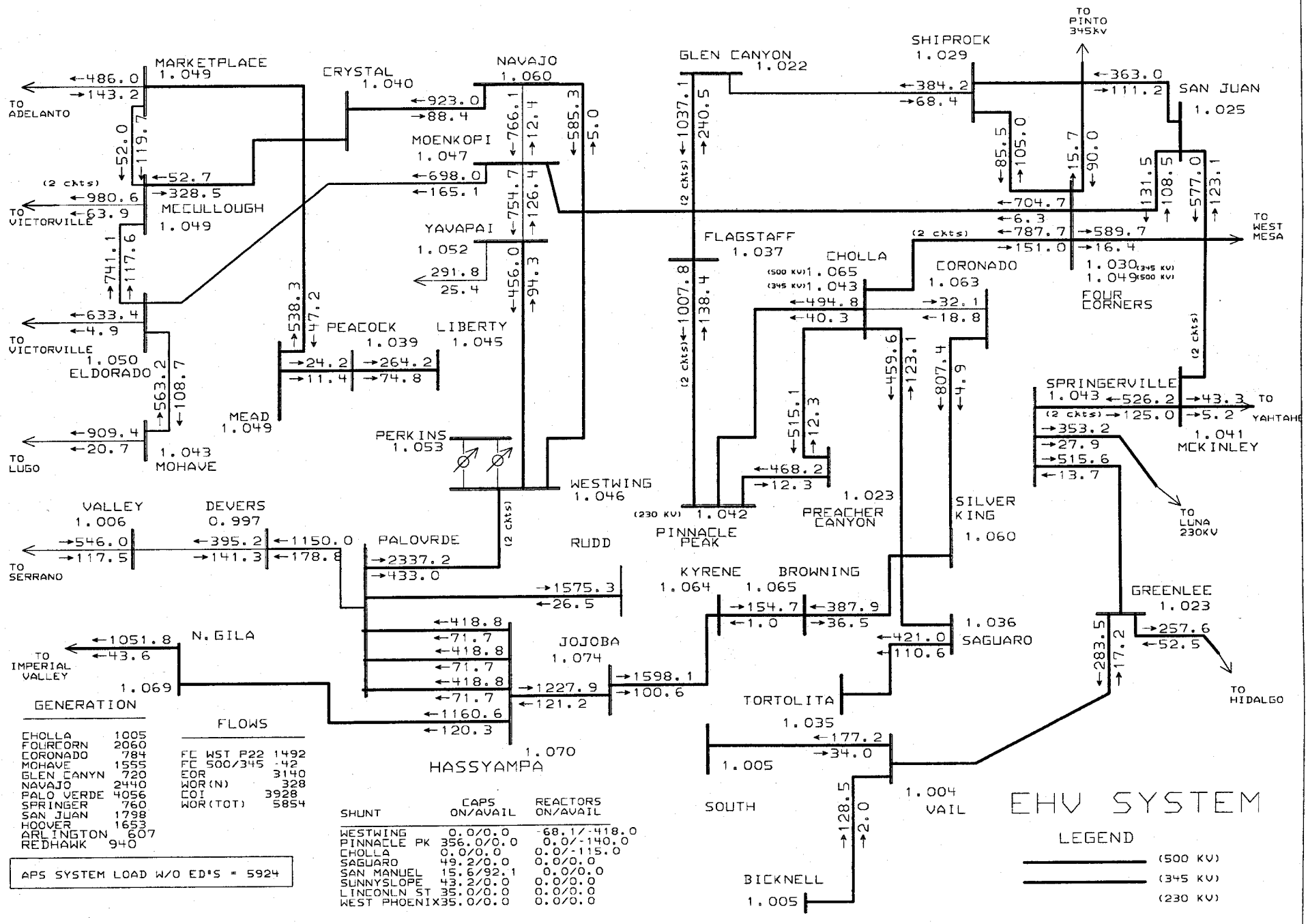

GENERATION

CHOLLA	1005
FOURCORN	2060
CORONADO	784
MOHAVE	1555
GLEN CANYN	720
NAVAJO	2440
PALO VERDE	4056
SPRINGER	760
SAN JUAN	1798
HOOVER	1653
ARLINGTON	607
REDHAWK	940

FLOWS

FC WST P22	1492
FC 500/345	-42
EOR	3140
WOR(N)	328
COI	3928
WOR(TOT)	5854

APS SYSTEM LOAD W/O ED'S = 5924

SHUNT	CAPS ON/AVAIL	REACTORS ON/AVAIL
WESTWING	0.0/0.0	-68.1/-418.0
PINNACLE PK	356.0/0.0	0.0/-140.0
CHOLLA	0.0/0.0	0.0/-115.0
SAGUARO	49.2/0.0	0.0/0.0
SAN MANUEL	15.6/92.1	0.0/0.0
SUNNYSLOPE	43.2/0.0	0.0/0.0
LINCONLN ST	35.0/0.0	0.0/0.0
WEST PHOENIX	35.0/0.0	0.0/0.0

A73

General Electric International, Inc. PSLF Program

Summer 2002 Coordinated Basecase ----- 3/11/2002
Arizona rep from VOP2001 basecase, WSCC Bulk case 2002hs3b
APS Rep updated as of 3/11/02. SRP Rep from VOP2001

2005zero_sant_1001increase no var margin
final changes from APS,SRP,WAPA for 2005

MW/MVAR Thu Jan 30 10:29:48 2003

c:\upslf131\w-area\ehv03.drw
c:\upslf131\w-area\2005zero_sa
Rating = 2

VOLTS	MVAR
0.92	-17.39
0.9175	-18.37
0.915	-18.26

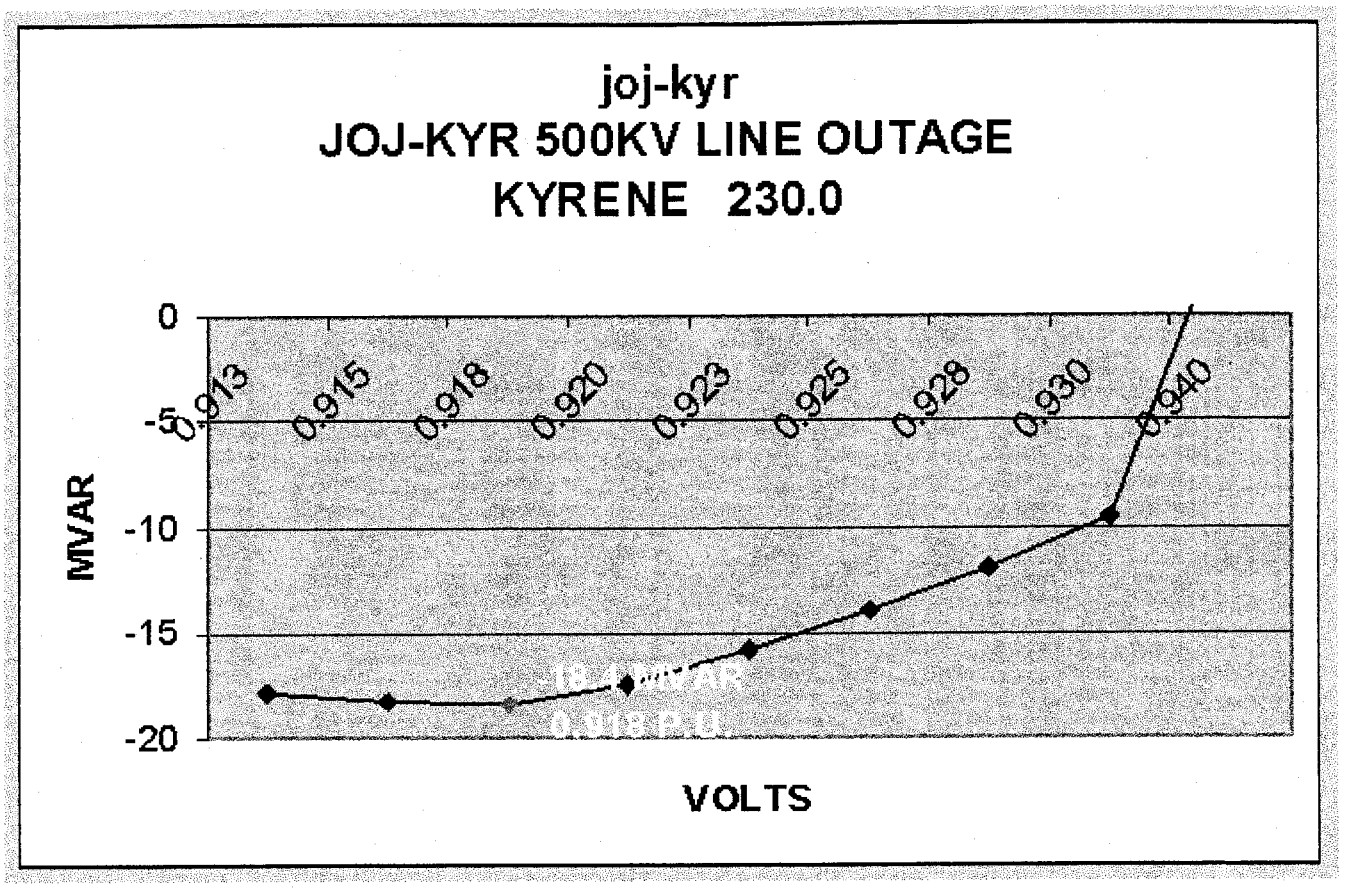

A 75

VOLTS	MVAR
0.935	-19.65
0.9325	-20.51
0.93	-20.24

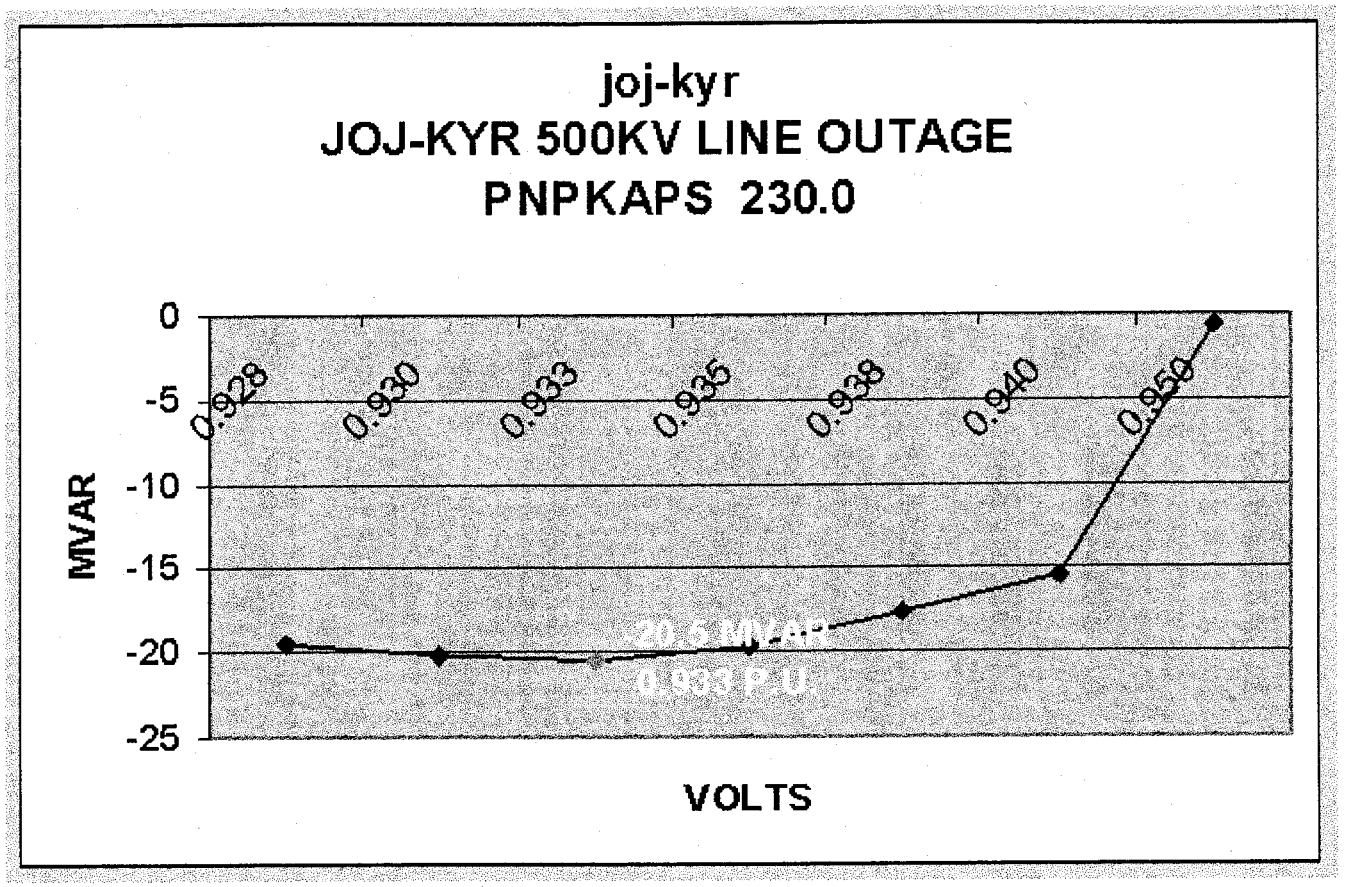

A76

VOLTS	MVAR
0.97	-27.75
0.9675	-29.08
0.965	-28.23

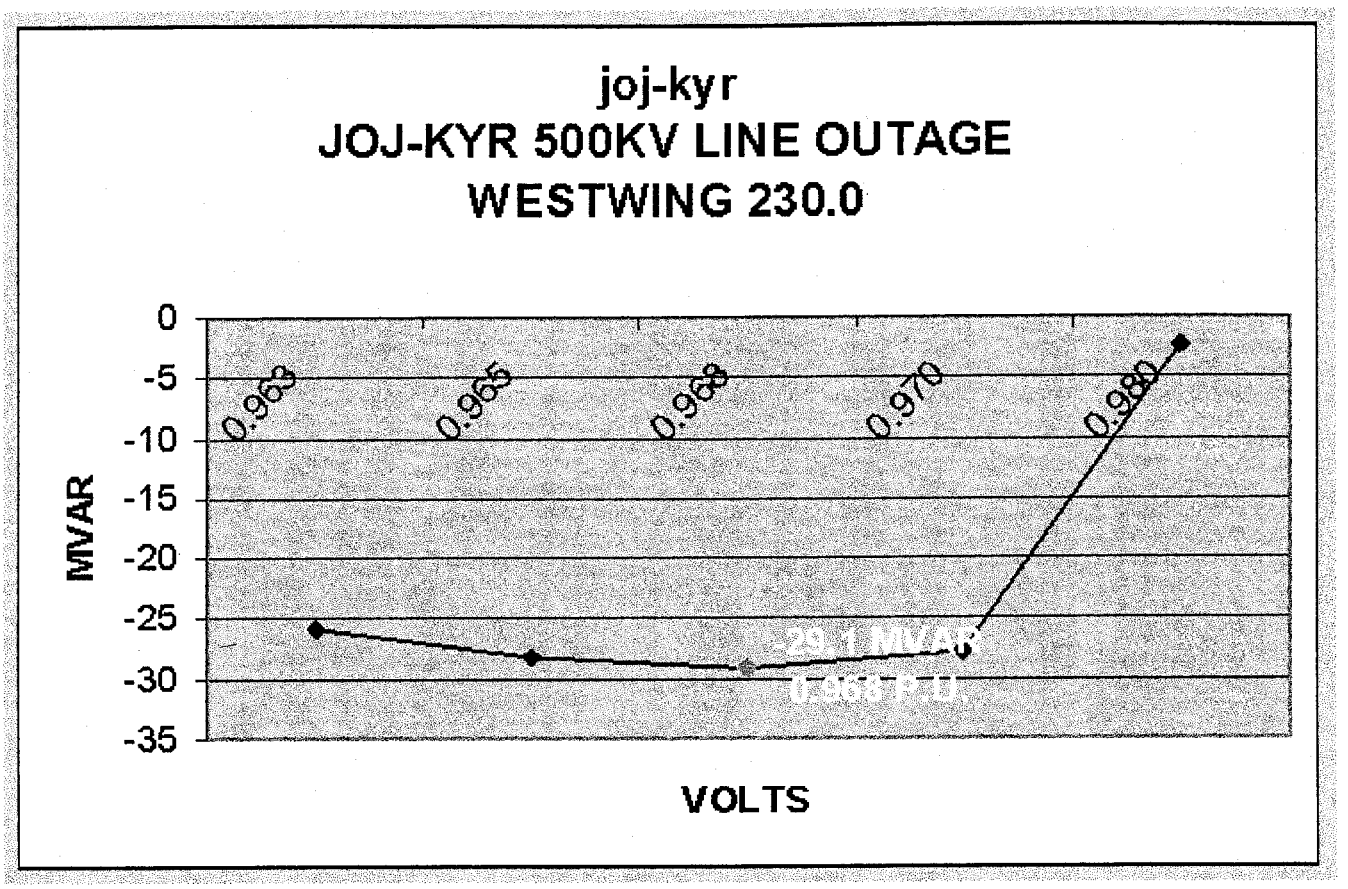

A77

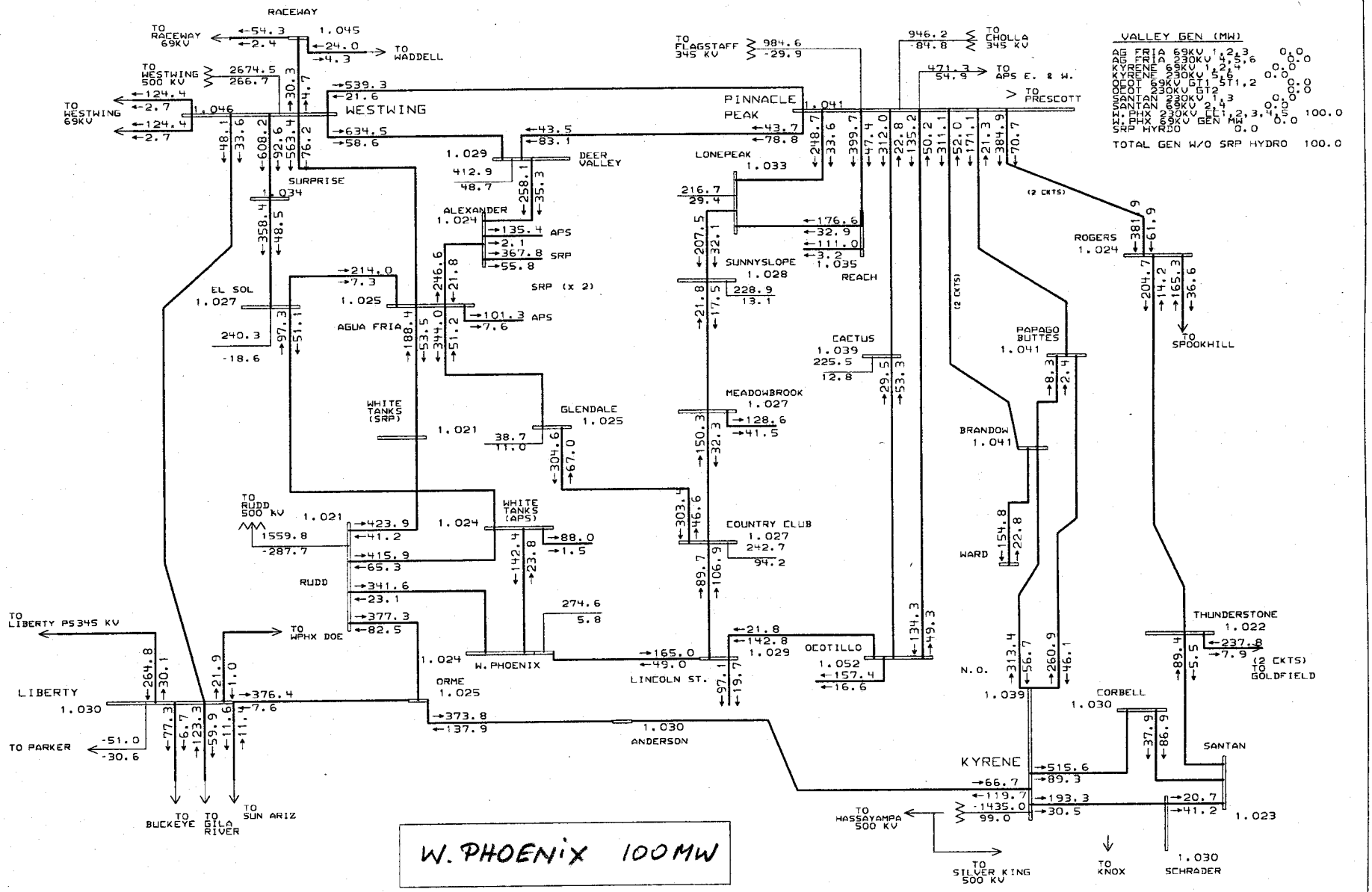

PHOENIX AREA 230KV SYSTEM

A78

General Electric International, Inc. PSLF Program

MW/MVAR Thu Jan 30 10:33:18 2003

Summer 2002 Coordinated Basecase ----- 3/11/2002
Arizona rep from VOP2001 basecase, WSCC Bulk case 2002hs3b
APS Rep updated as of 3/11/02. SRP Rep from VOP2001

2005zero_wphx-100increase no var margin
final changes from APS,SRP,WAPA for 2005

c:\upslf131\w-area\met230_03a.
c:\upslf131\w-area\2005zero_ph
Rating = 2

VOLTS	MVAR
0.935	-5.63
0.9325	-6.07
0.93	-5.32

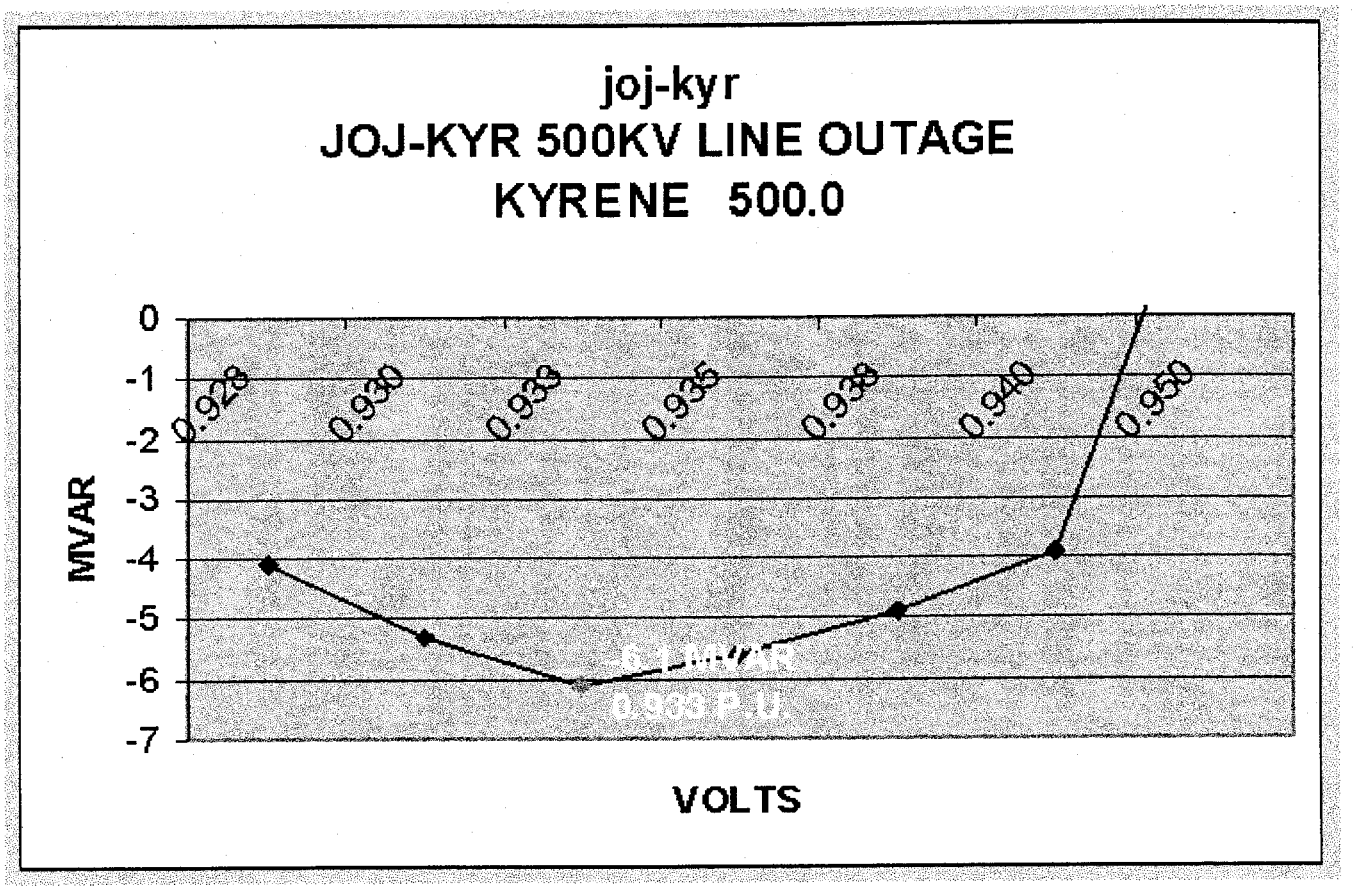

A 80

VOLTS	MVAR
0.92	-2.72
0.91	-6.04
0.9075	-5.09

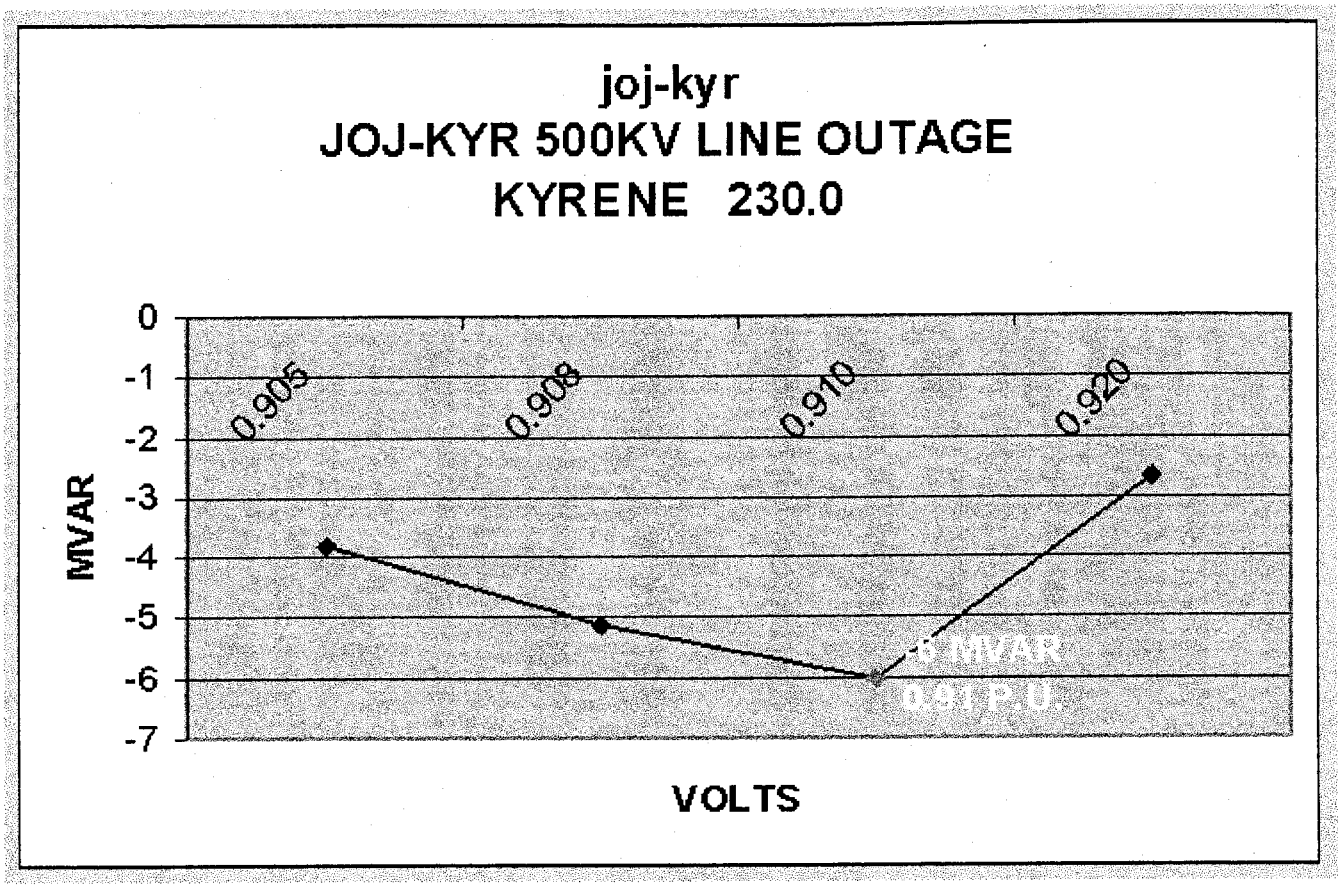

A81

VOLTS	MVAR
0.94	-1.95
0.93	-6.86
0.9275	-5.63

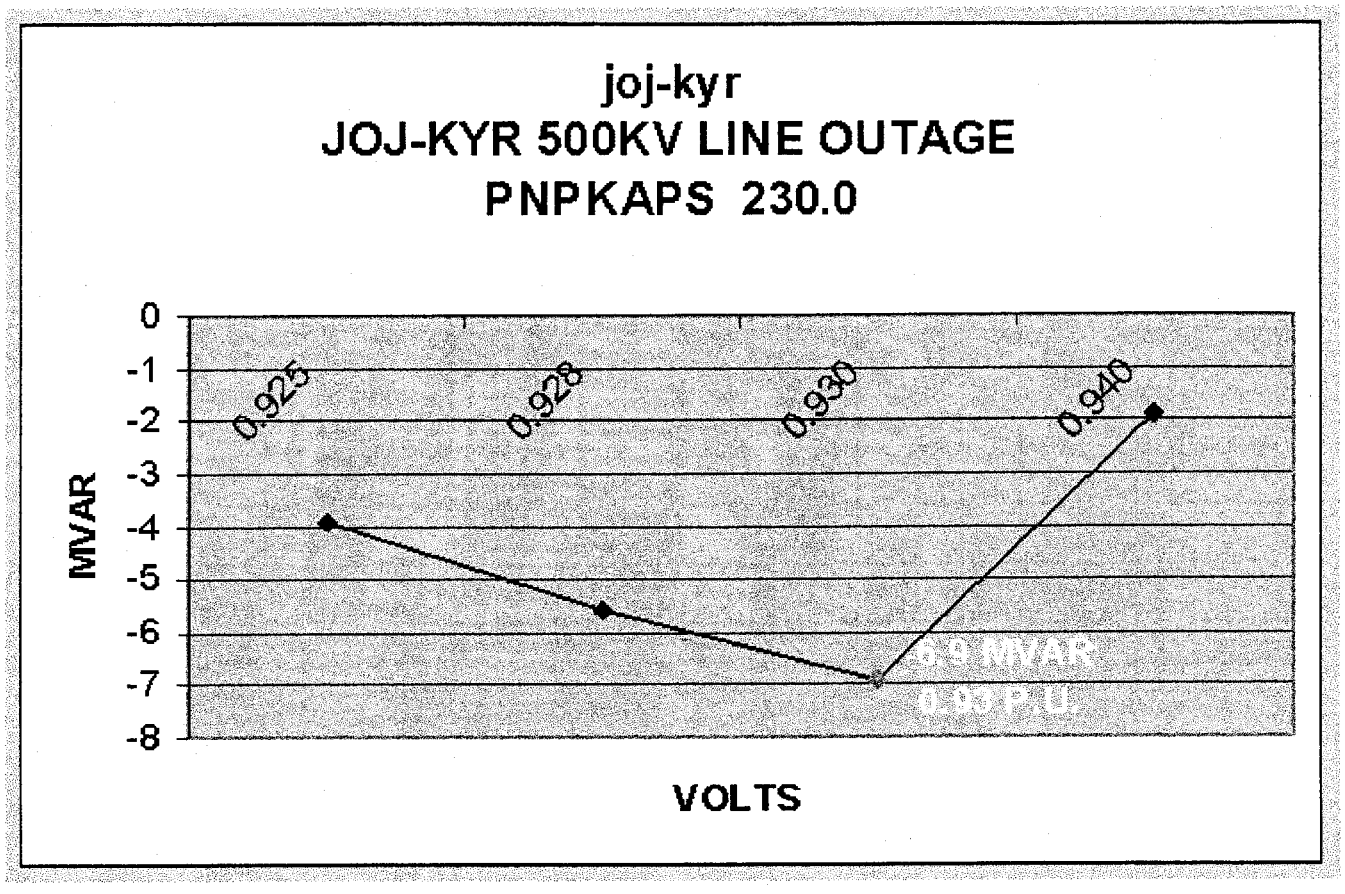

A82

VOLTS	MVAR
0.98	8.68
0.97	-9.30
0.9675	-9.28

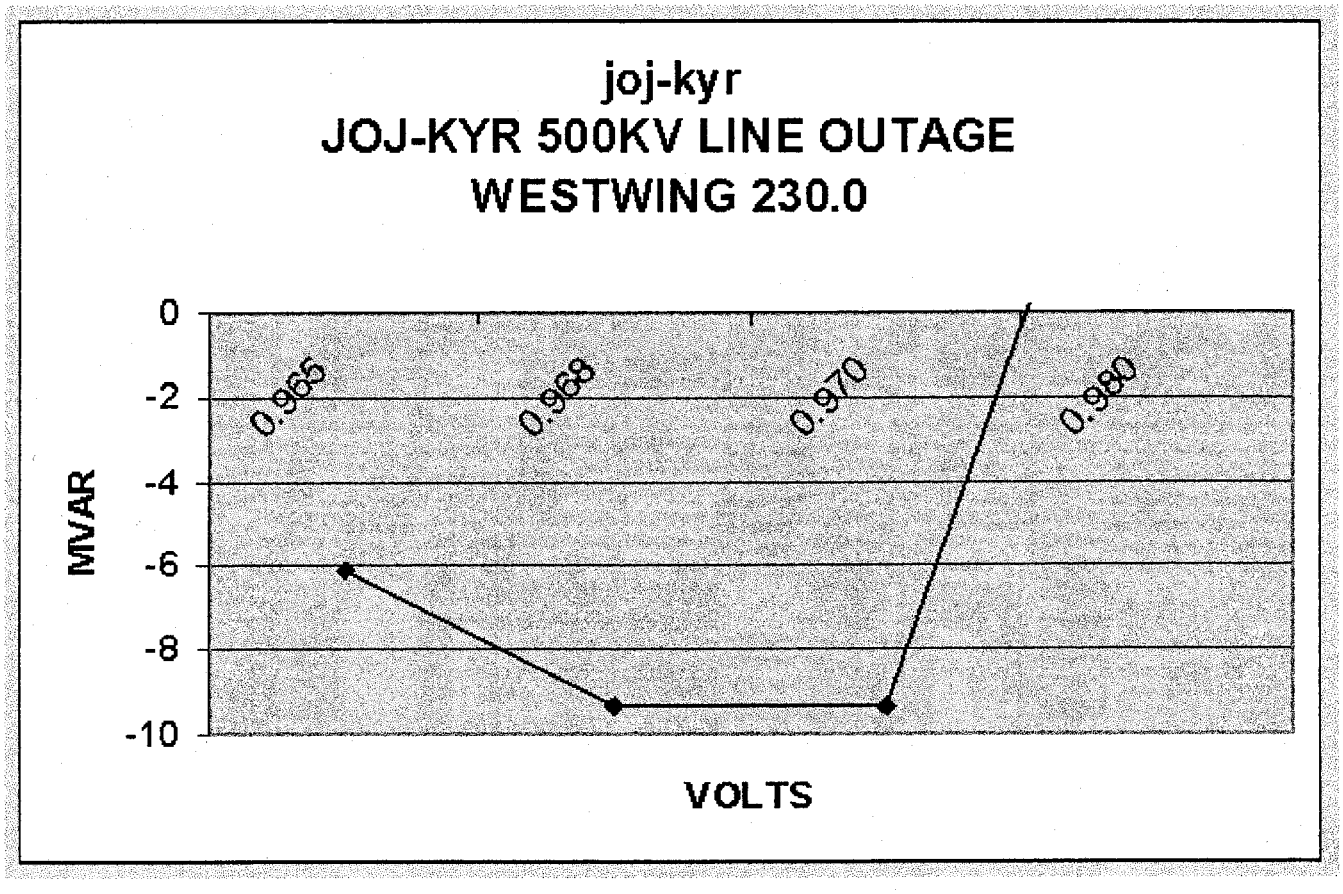

A 83

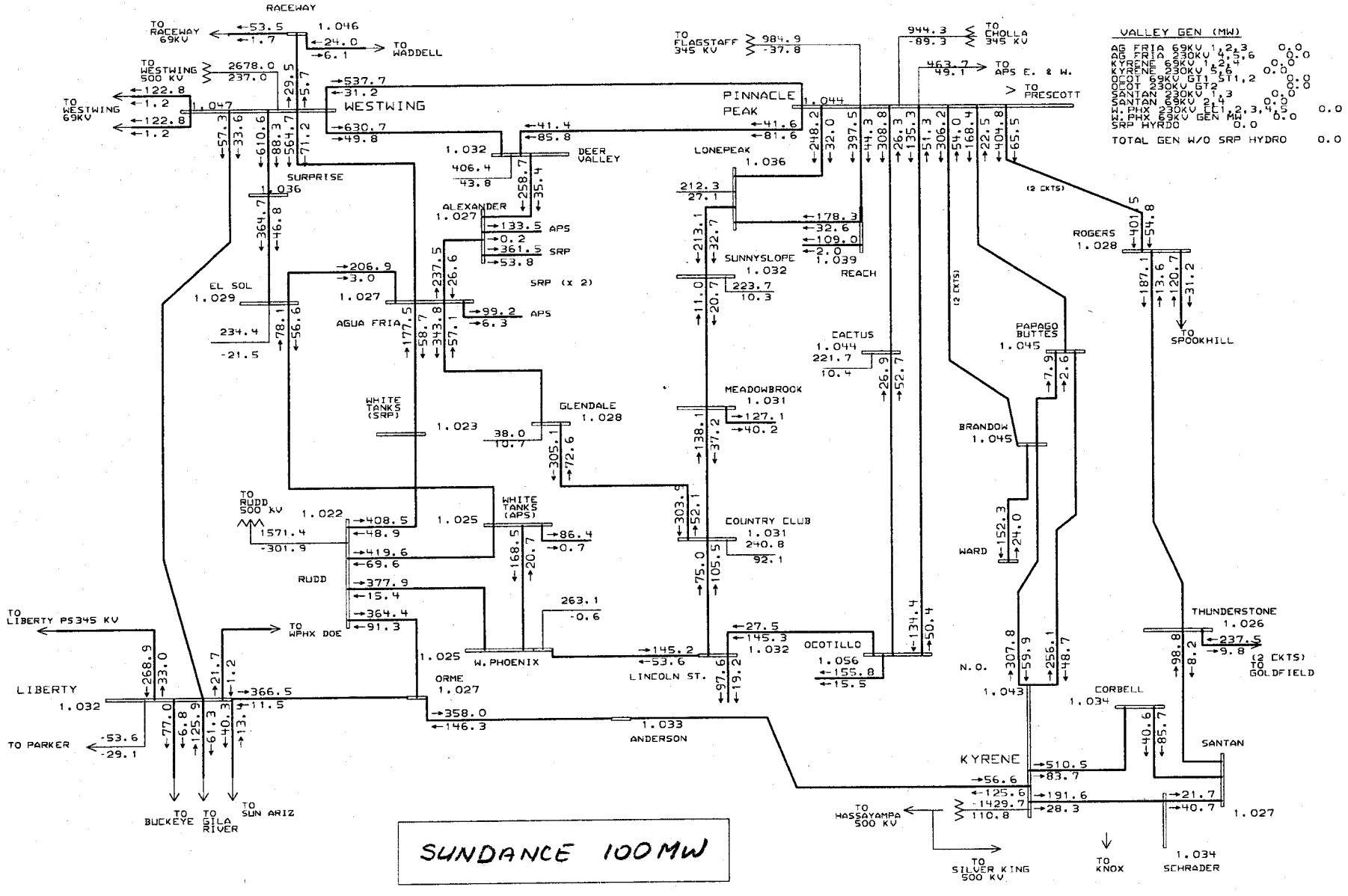

PHOENIX AREA 230KV SYSTEM

A84

General Electric International, Inc. PSLF Program

MW/MVAR Thu Jan 30 10:16:01 2003

Summer 2002 Coordinated Basecase ----- 3/11/2002
Arizona rep from VOP2001 basecase, WSCC Bulk case 2002hs3b
APS Rep updated as of 3/11/02. SRP Rep from VOP2001

2005zero_sund_100reduction no var margin
final changes from APS,SRP,WAPA for 2005

c:\ups1f131\w-area\met230_03a.
c:\ups1f131\w-area\2005zero_su
Rating = 2

VOLTS	MVAR
0.935	-16.45
0.9325	-16.46
0.93	-16.14

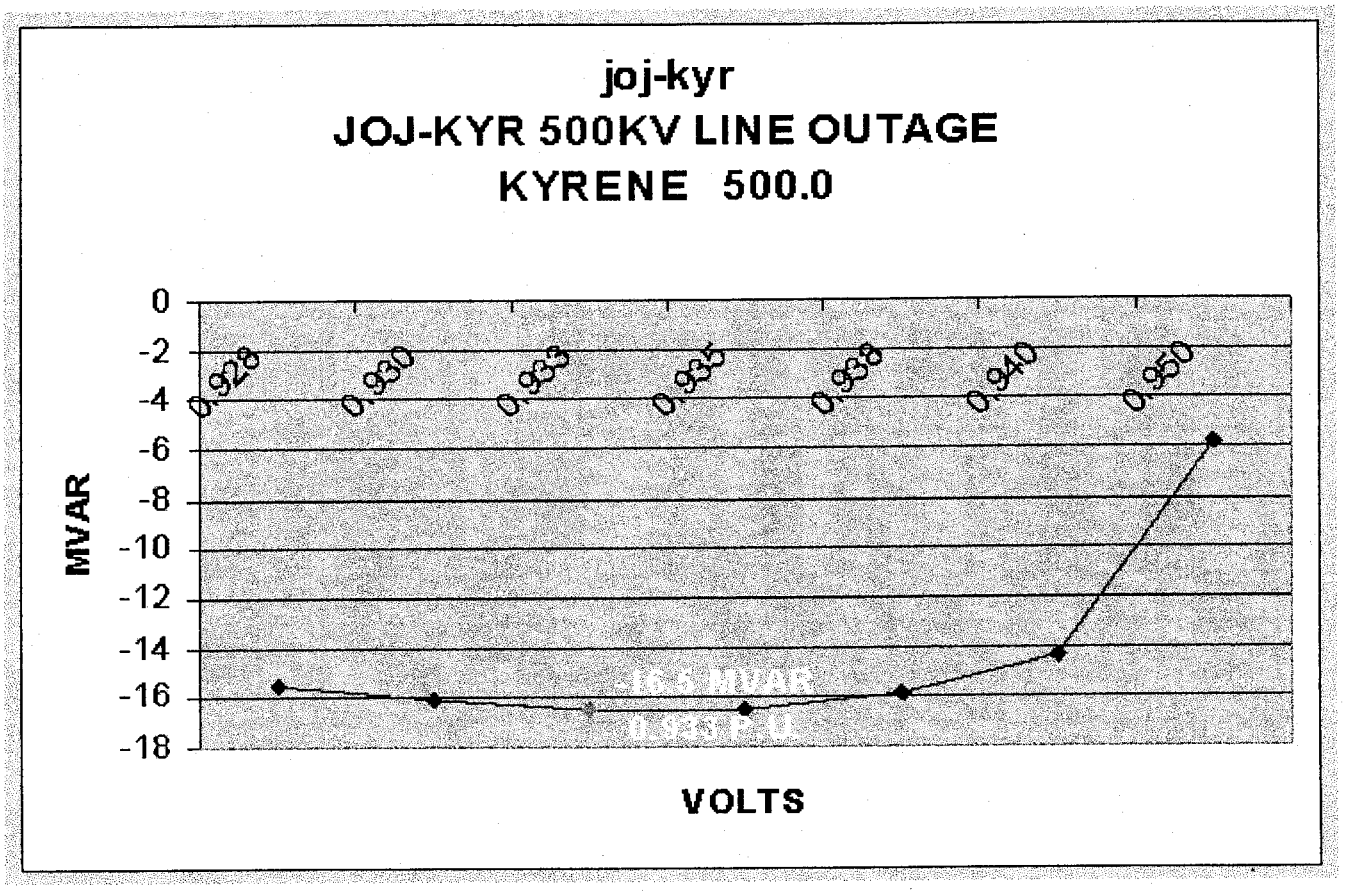

A86

VOLTS	MVAR
0.915	-16.27
0.9125	-16.55
0.91	-16.48

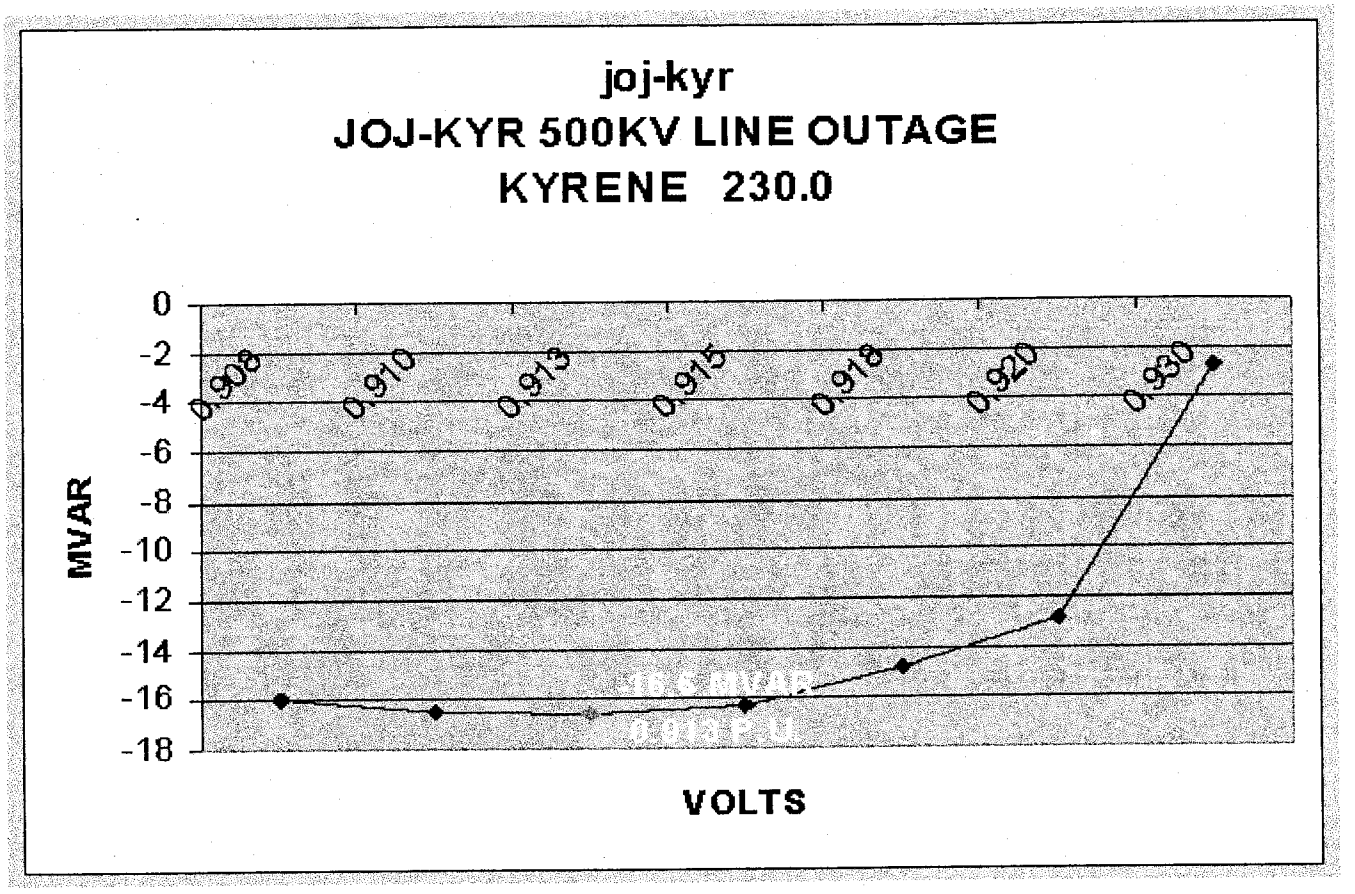

A87

VOLTS	MVAR
0.9325	-18.52
0.93	-18.64
0.9275	-18.25

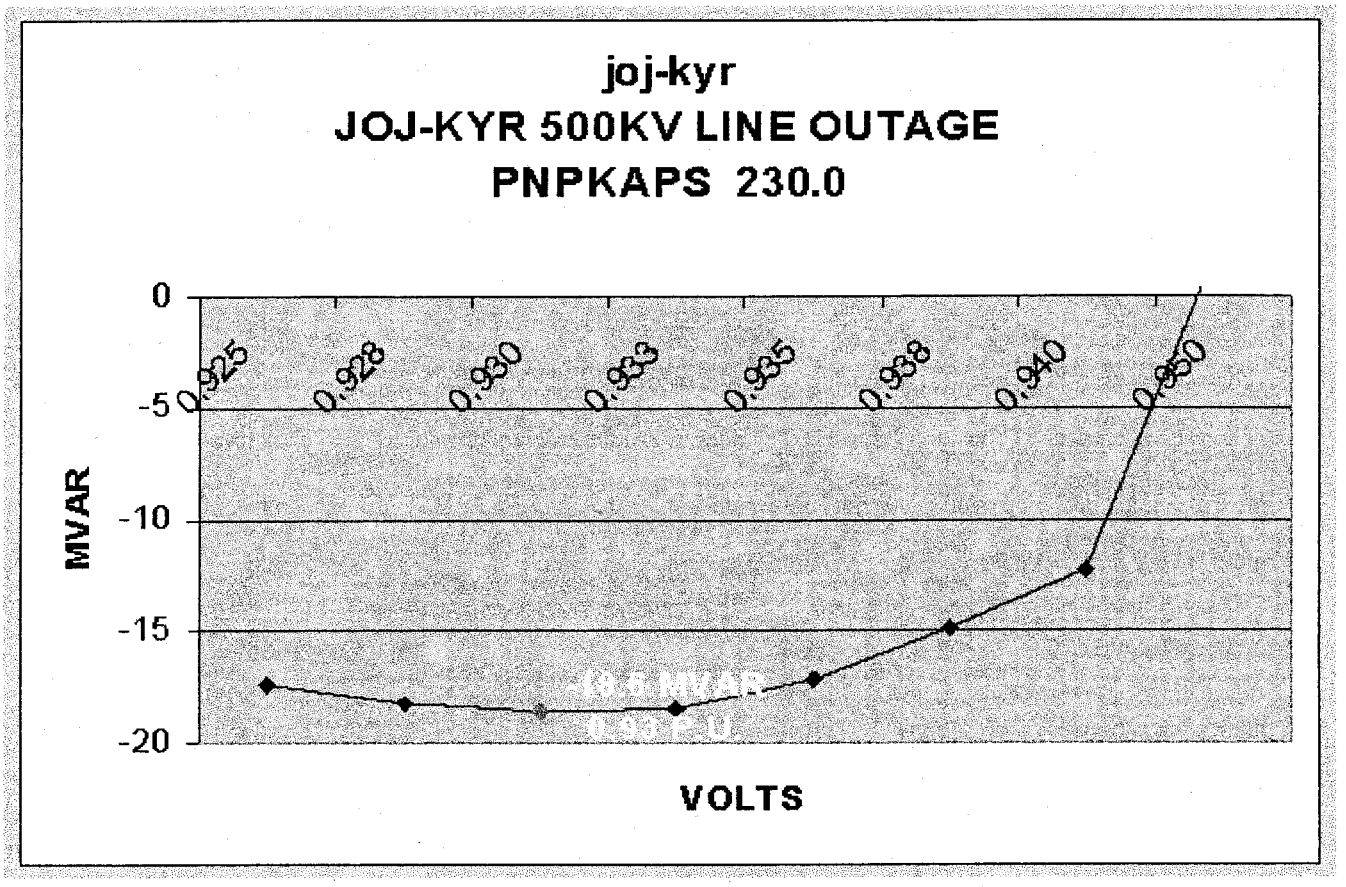

A88

VOLTS	MVAR
0.97	-24.79
0.9675	-26.42
0.965	-26.12

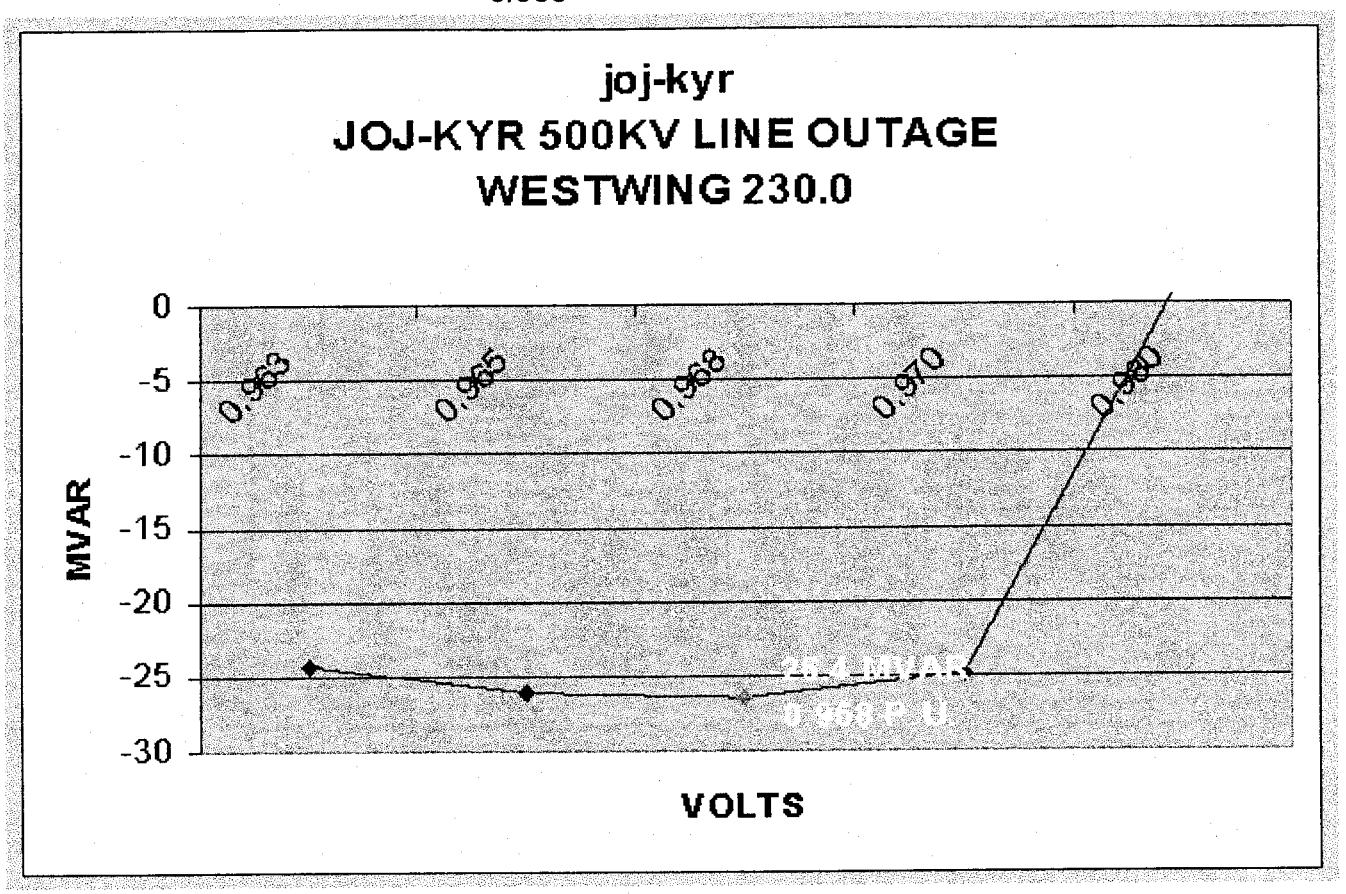

A89

A90

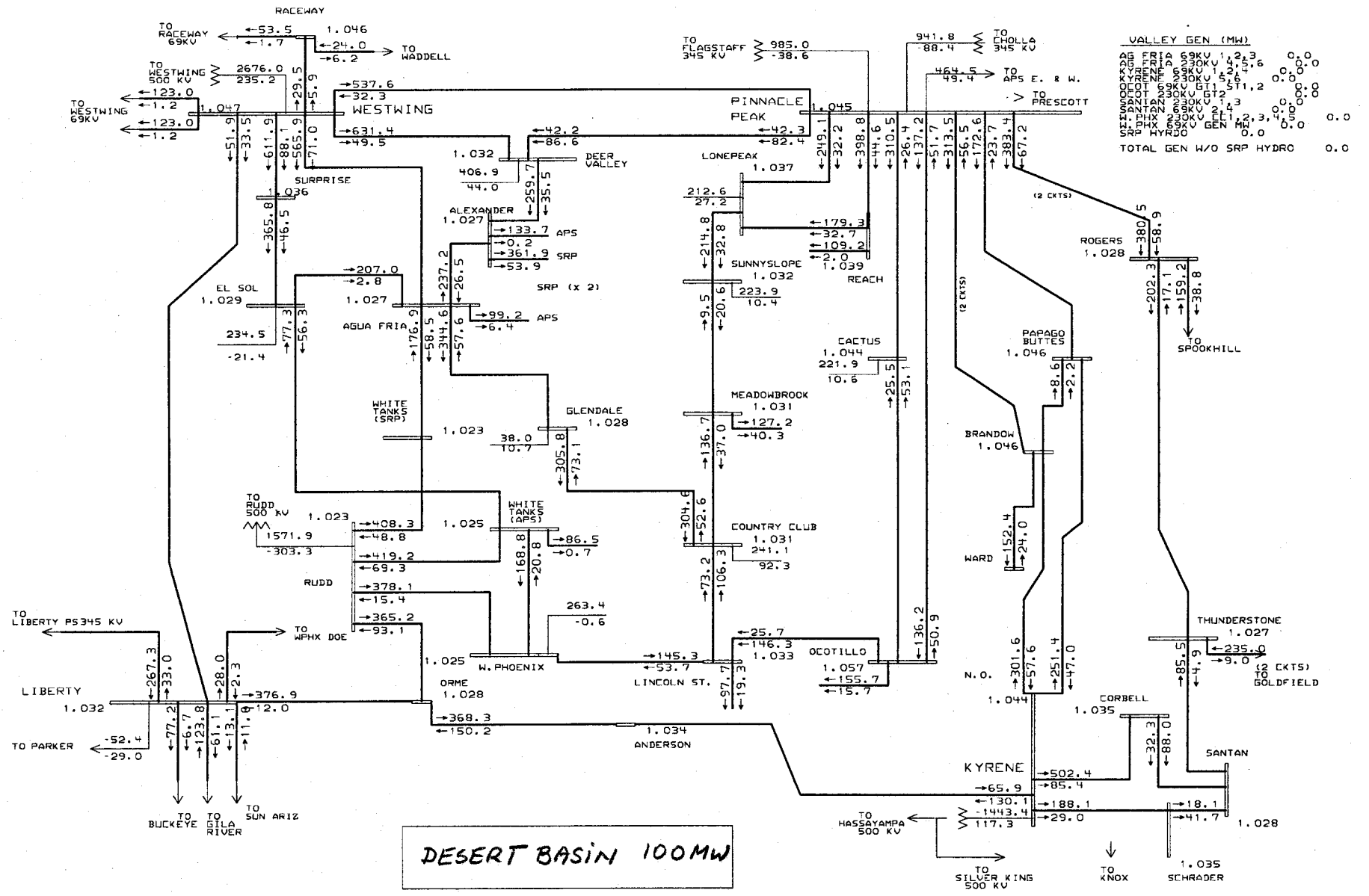

PHOENIX AREA 230KV SYSTEM

General Electric International, Inc. PSLF Program MW/MVAR Thu Jan 30 10:02:57 2003

Summer 2002 Coordinated Basecase ----- 3/11/2002
Arizona rep from VOP2001 basecase, WSCC Bulk case 2002hs3b
APS Rep updated as of 3/11/02. SRP Rep from VOP2001

2005zero_dbg_100reduction no var margin
final changes from APS,SRP,WAPA for 2005

c:\upslf131\w-area\met230_03a.
c:\upslf131\w-area\2005zero_db
Rating = 2

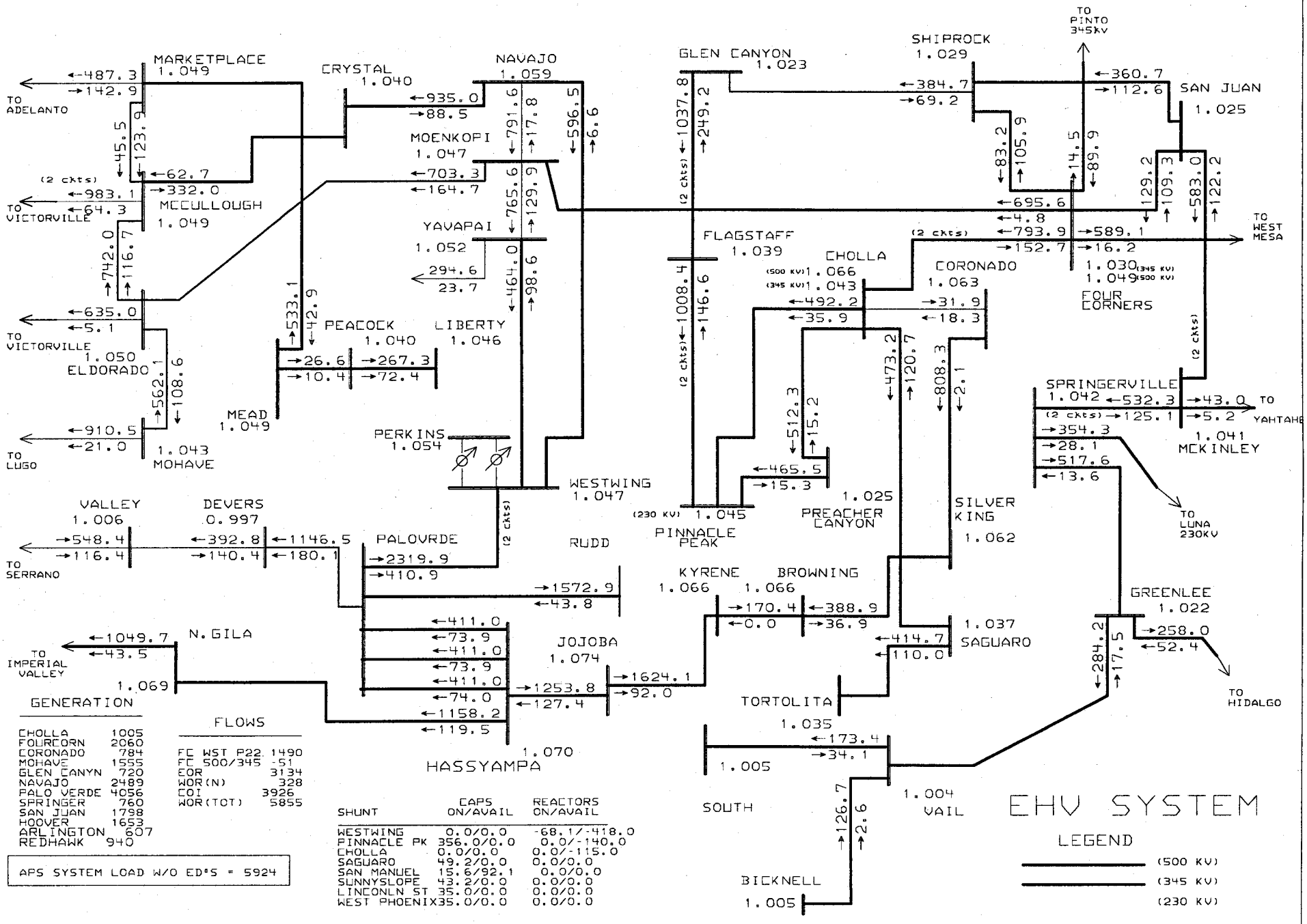

GENERATION

CHOLLA	1005
FOURCORN	2060
CORONADO	784
MOHAVE	1555
GLEN CANYN	720
NAVAJO	2489
PALO VERDE	4056
SPRINGER	760
SAN JUAN	1798
HOOVER	1653
ARLINGTON	607
REDHAWK	940

FLOWS

FC WST P22	1490
FC 500/345	-51
EOR	3134
WOR(N)	328
COI	3926
WOR(TOT)	5855

APS SYSTEM LOAD W/O ED'S = 5924

SHUNT	CAPS ON/AVAIL	REACTORS ON/AVAIL
WESTWING	0.0/0.0	-68.1/-418.0
PINNACLE PK	356.0/0.0	0.0/-140.0
CHOLLA	0.0/0.0	0.0/-115.0
SAGUARO	49.2/0.0	0.0/0.0
SAN MANUEL	15.6/92.1	0.0/0.0
SUNNYSLOPE	43.2/0.0	0.0/0.0
LINCONLN ST	35.0/0.0	0.0/0.0
WEST PHOENIX	35.0/0.0	0.0/0.0

General Electric International, Inc. BSLF Program MW/MVAR Thu Jan 30 10:02:33 2003

Summer 2002 Coordinated Basecase ----- 3/11/2002
Arizona rep from VOP2001 basecase, WSCC Bulk case 2002hs3b
APS Rep updated as of 3/11/02. SRP Rep from VOP2001

2005zero_dbg_100reduction no var margin
final changes from APS,SRP,WAPA for 2005

c:\upslf131\w-area\ehv03.drw
c:\upslf131\w-area\2005zero_db
Rating = 2

A91

VOLTS	MVAR
0.9375	-18.53
0.935	-18.88
0.9325	-18.82

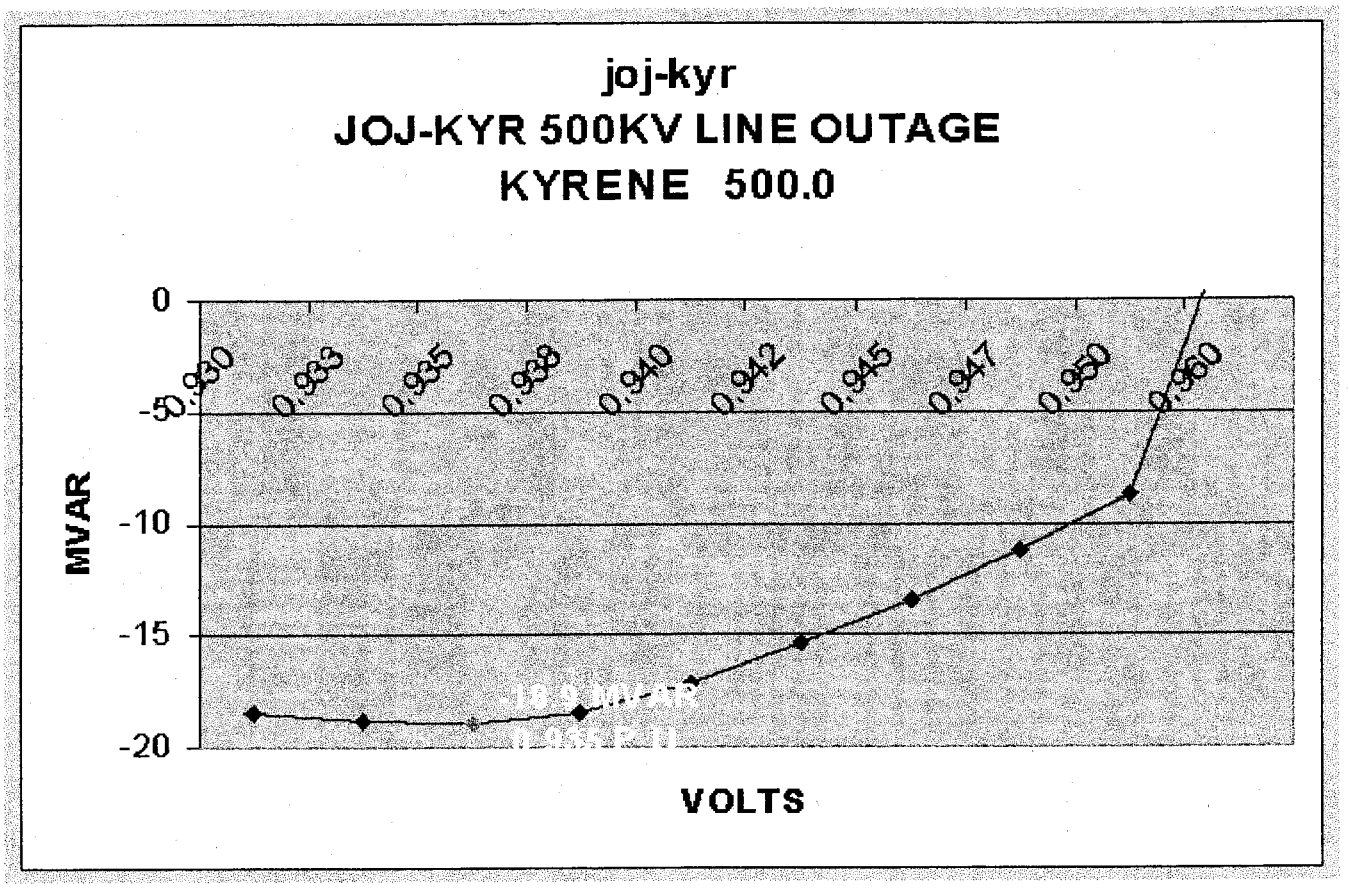

A92

VOLTS	MVAR
0.915	-18.81
0.9125	-18.99
0.91	-18.82

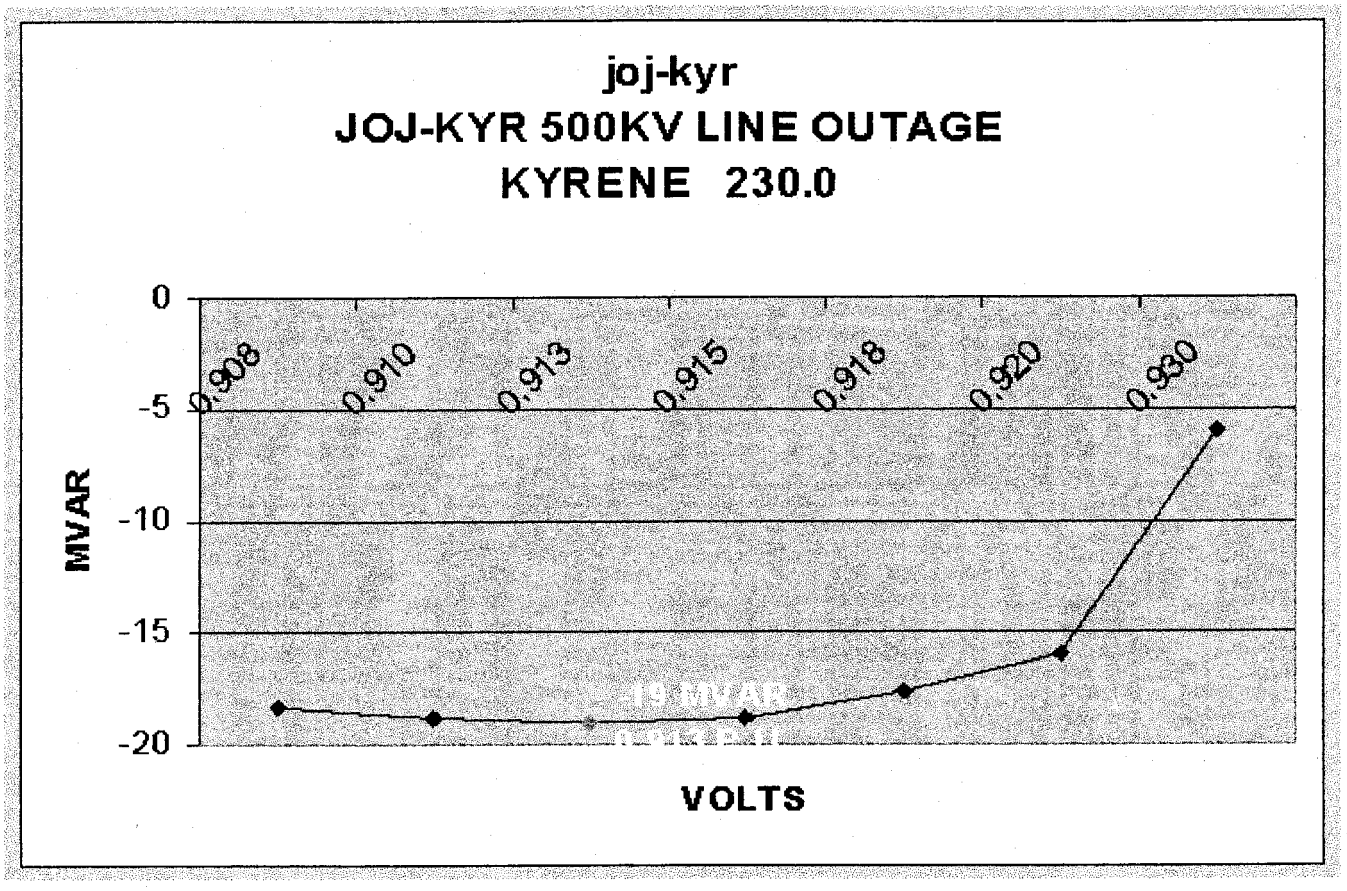

A93

VOLTS	MVAR
0.9325	-21.16
0.93	-21.30
0.9275	-20.91

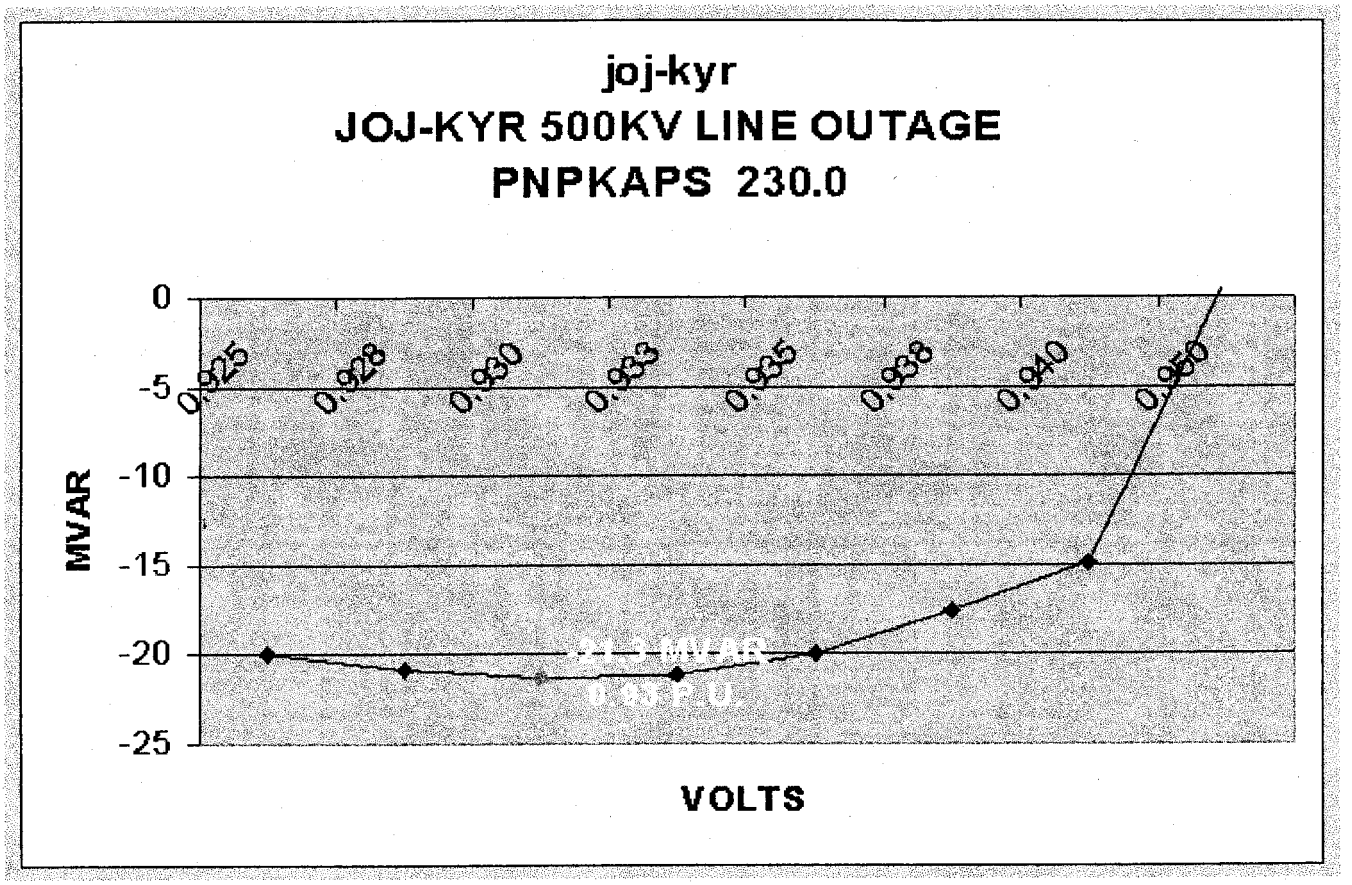

A94

VOLTS	MVAR
0.97	-28.32
0.9675	-30.13
0.965	-29.98

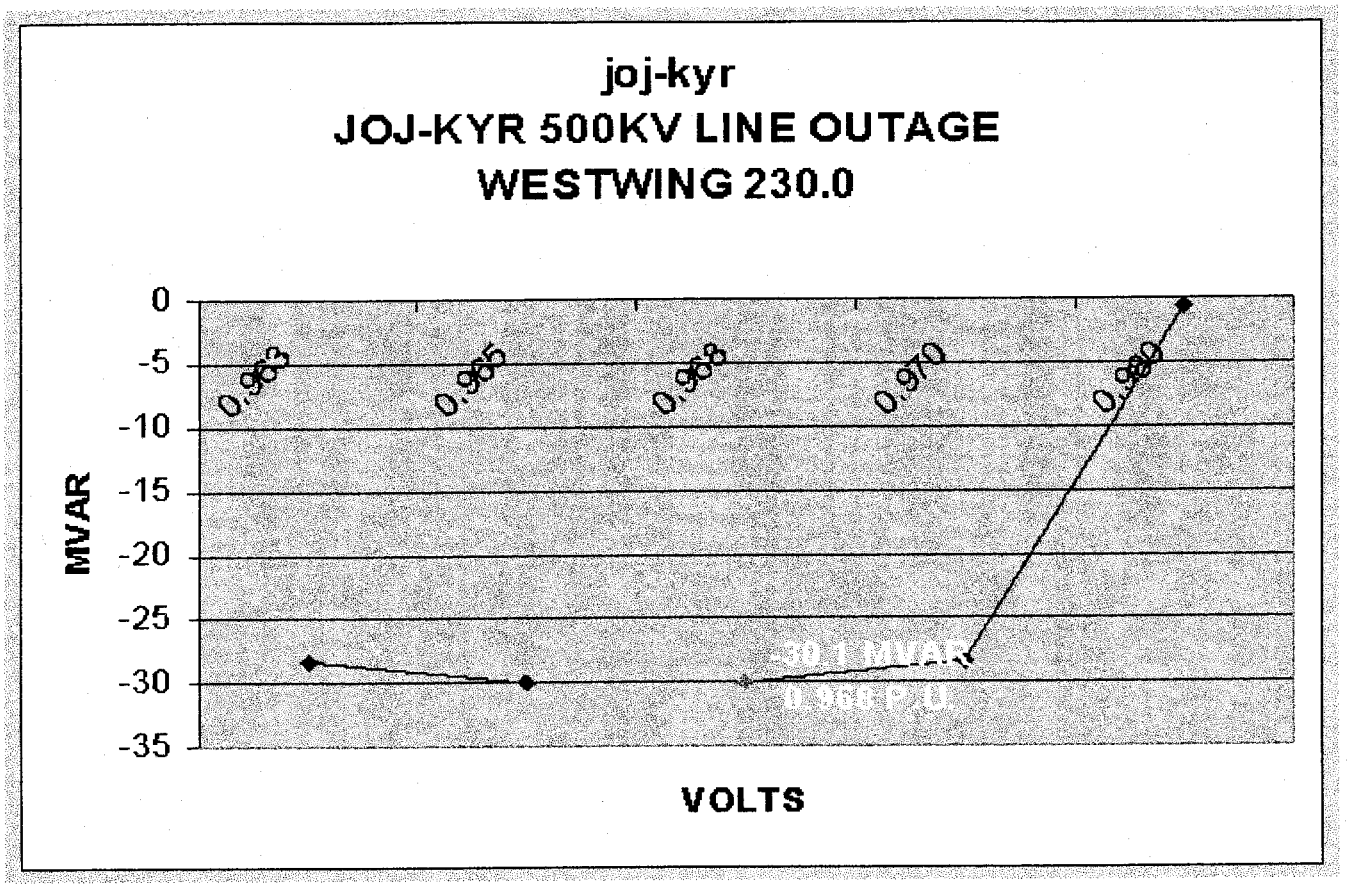

A95

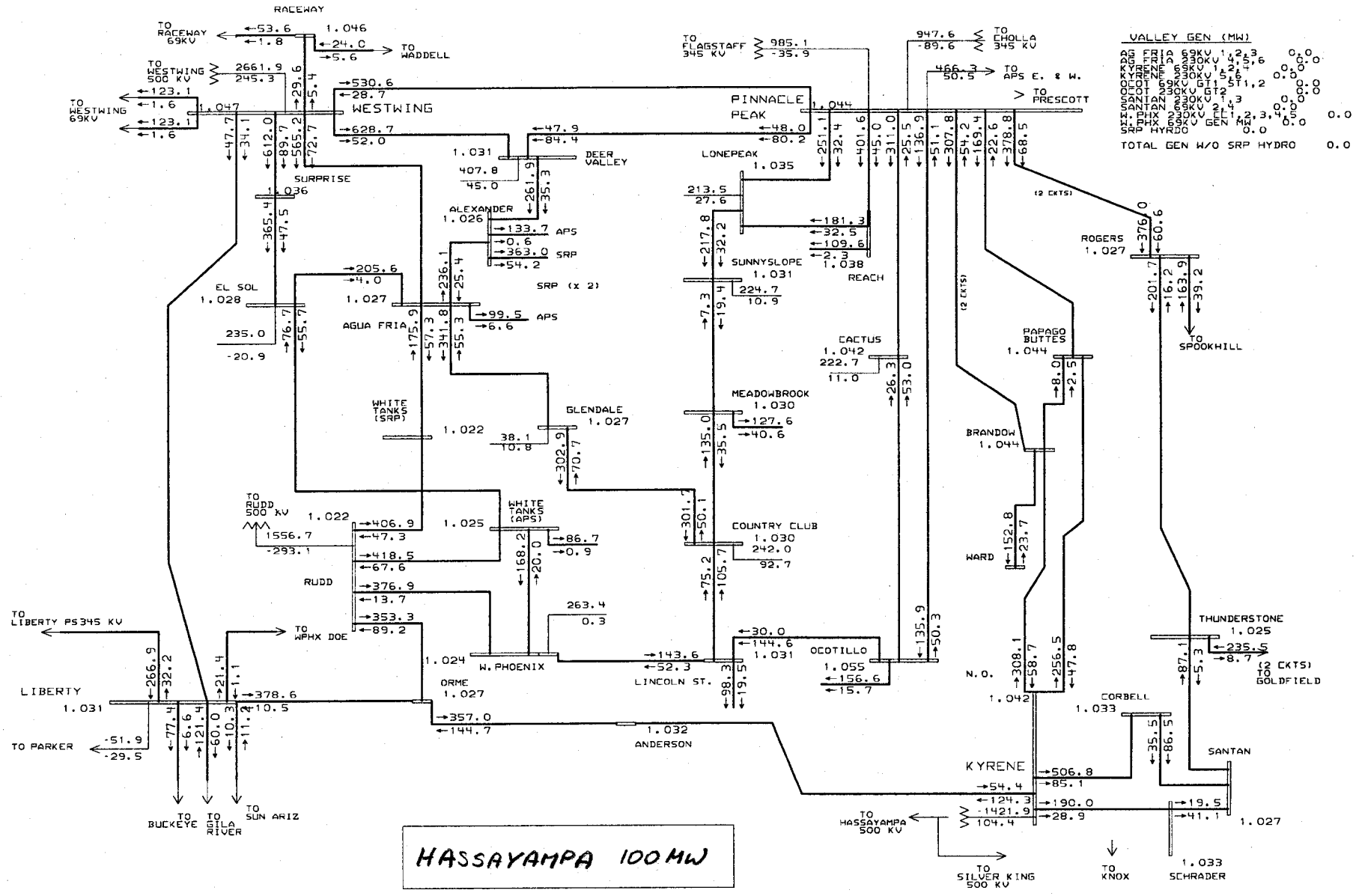

PHOENIX AREA 230KV SYSTEM

A96

General Electric International, Inc. PSLF Program MW/MVAR Thu Jan 30 10:00:01 2003

Summer 2002 Coordinated Basecase ----- 3/11/2002
Arizona rep from VOP2001 basecase, WSCC Bulk case 2002hs3b
APS Rep updated as of 3/11/02. SRP Rep from VOP2001

2005zero_rhog_100reduced no var margin
final changes from APS,SRP,WAPA for 2005

c:\upslf131\w-area\met230_03a.
c:\upslf131\w-area\2005zero_rh
Rating = 2

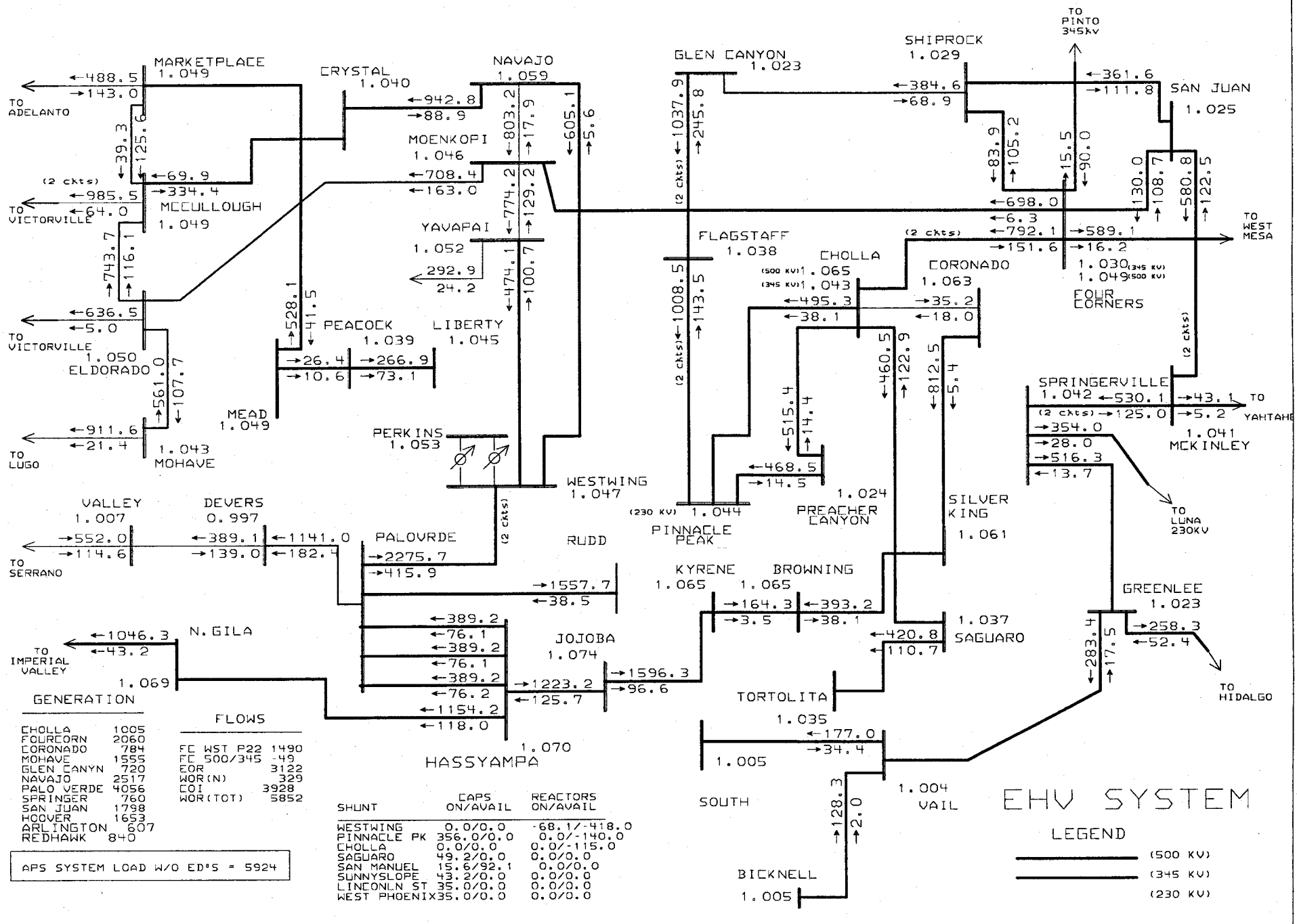

EHV SYSTEM

GENERATION

CHOLLA	1005
FOURCORN	2060
CORONADO	784
MOHAVE	1555
GLEN CANYN	720
NAVAJO	2517
PALO VERDE	4056
SPRINGER	760
SAN JUAN	1798
HOOVER	1653
ARLINGTON	607
REDHAWK	840

FLOWS

FC WST P22	1490
FC 500/345	-49
EOR	3122
WOR(N)	329
COI	3928
WOR(TOT)	5852

APS SYSTEM LOAD W/O ED'S = 5924

SHUNT	CAPS ON/AVAIL	REACTORS ON/AVAIL
WESTWING	0.0/0.0	-68.1/-418.0
PINNACLE PK	356.0/0.0	0.0/-140.0
CHOLLA	0.0/0.0	0.0/-115.0
SAGUARO	49.2/0.0	0.0/0.0
SAN MANUEL	15.6/92.1	0.0/0.0
SUNNYSLOPE	43.2/0.0	0.0/0.0
LINCONLN ST	35.0/0.0	0.0/0.0
WEST PHOENIX	35.0/0.0	0.0/0.0

LEGEND

(500 KV)
(345 KV)
(230 KV)

A97

General Electric International, Inc. PSLF Program MW/MVAR Thu Jan 30 09:59:40 2003

Summer 2002 Coordinated Basecase ----- 3/11/2002
Arizona rep from VOP2001 basecase, WSCC Bulk case 2002hs3b
APS Rep updated as of 3/11/02. SRP Rep from VOP2001

2005zero_rhog_100reduced no var margin
final changes from APS,SRP,WAPA for 2005

c:\upslf131\w-area\ehv03.drw
c:\upslf131\w-area\2005zero_rh
Rating = 2

VOLTS	MVAR
0.935	-16.90
0.9325	-17.76
0.93	-17.46

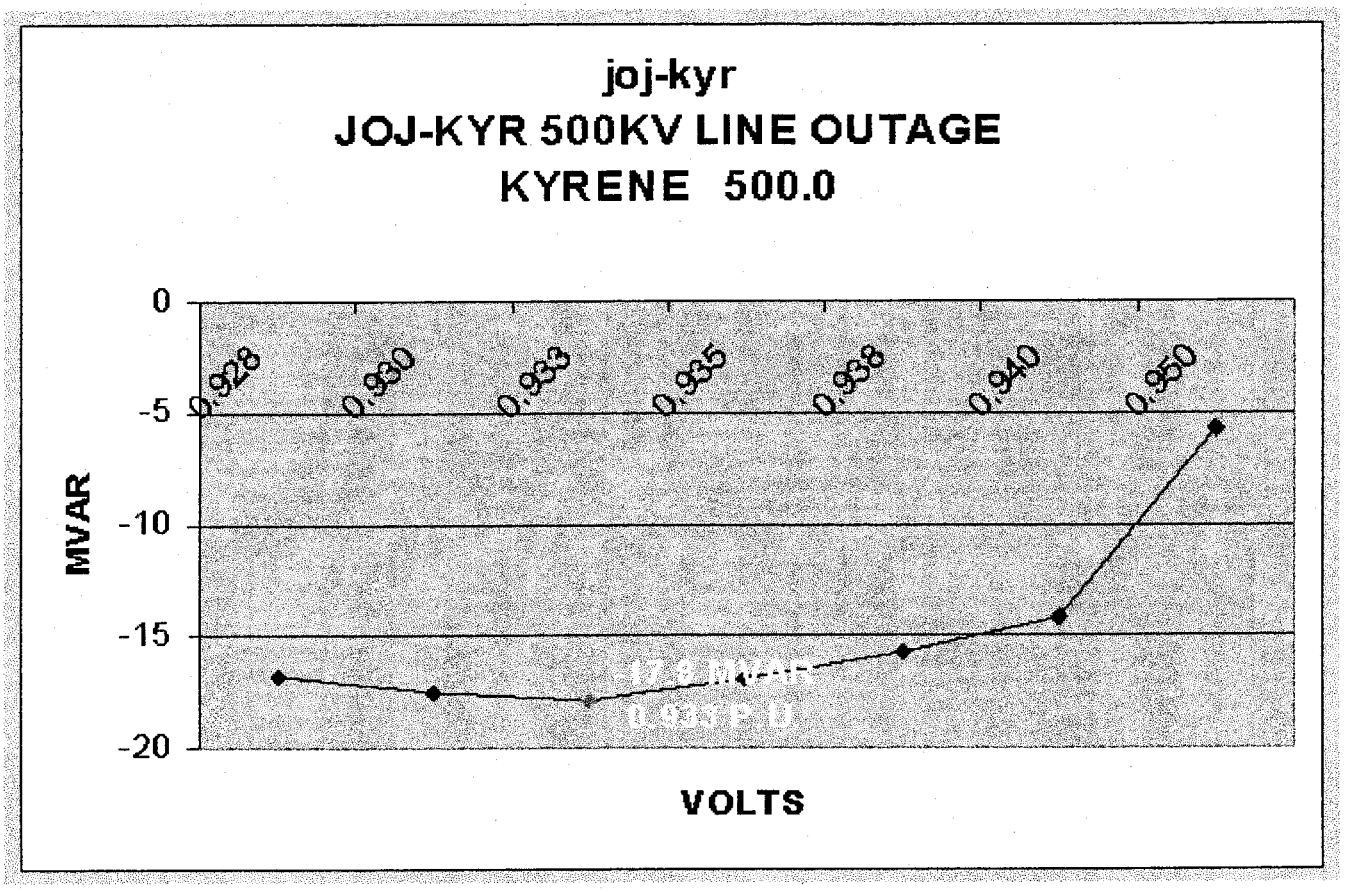

A98

VOLTS	MVAR
0.9125	-17.38
0.91	-17.80
0.9075	-17.34

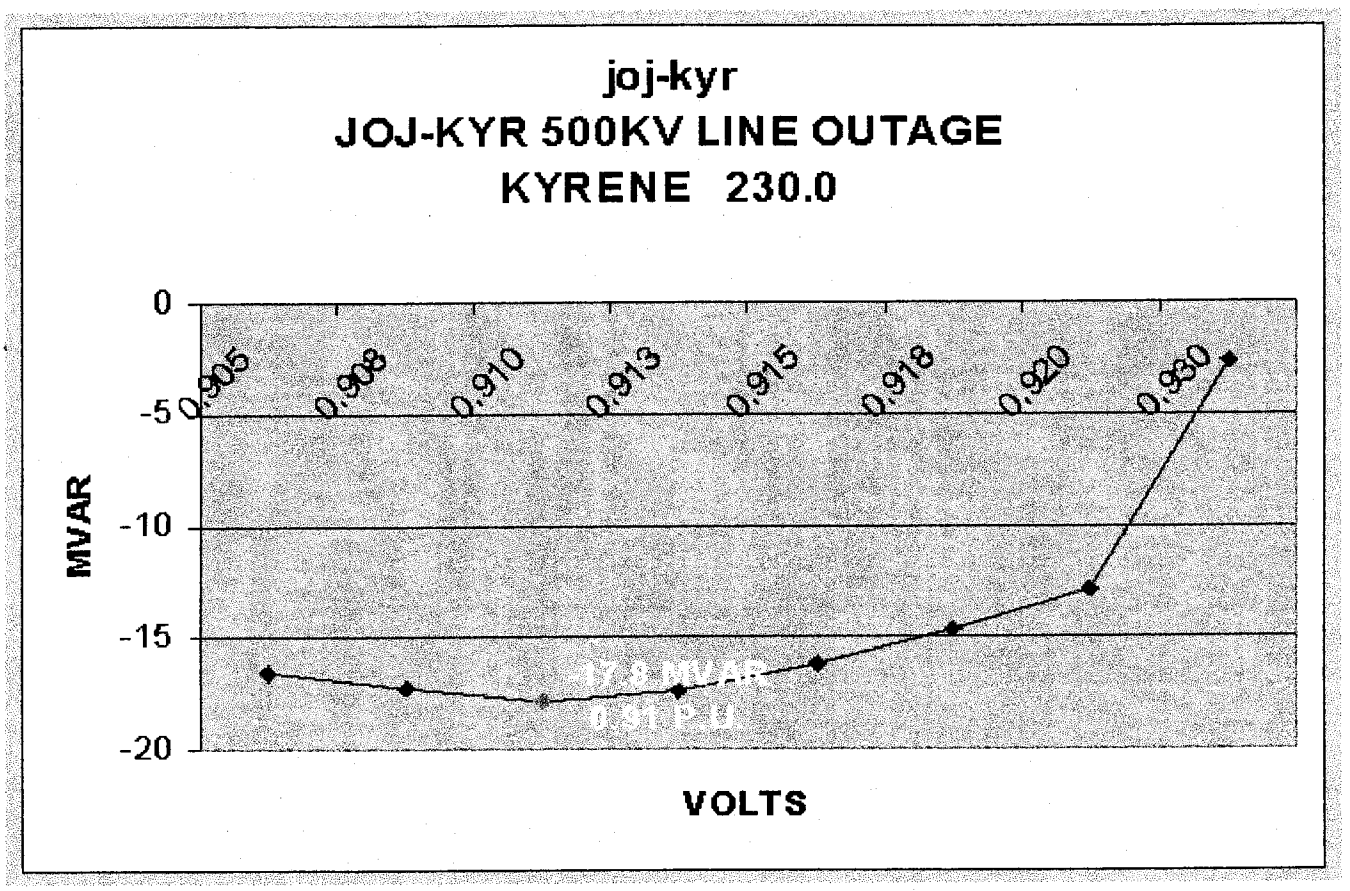

A99

VOLTS	MVAR
0.9325	-19.07
0.93	-20.10
0.9275	-19.67

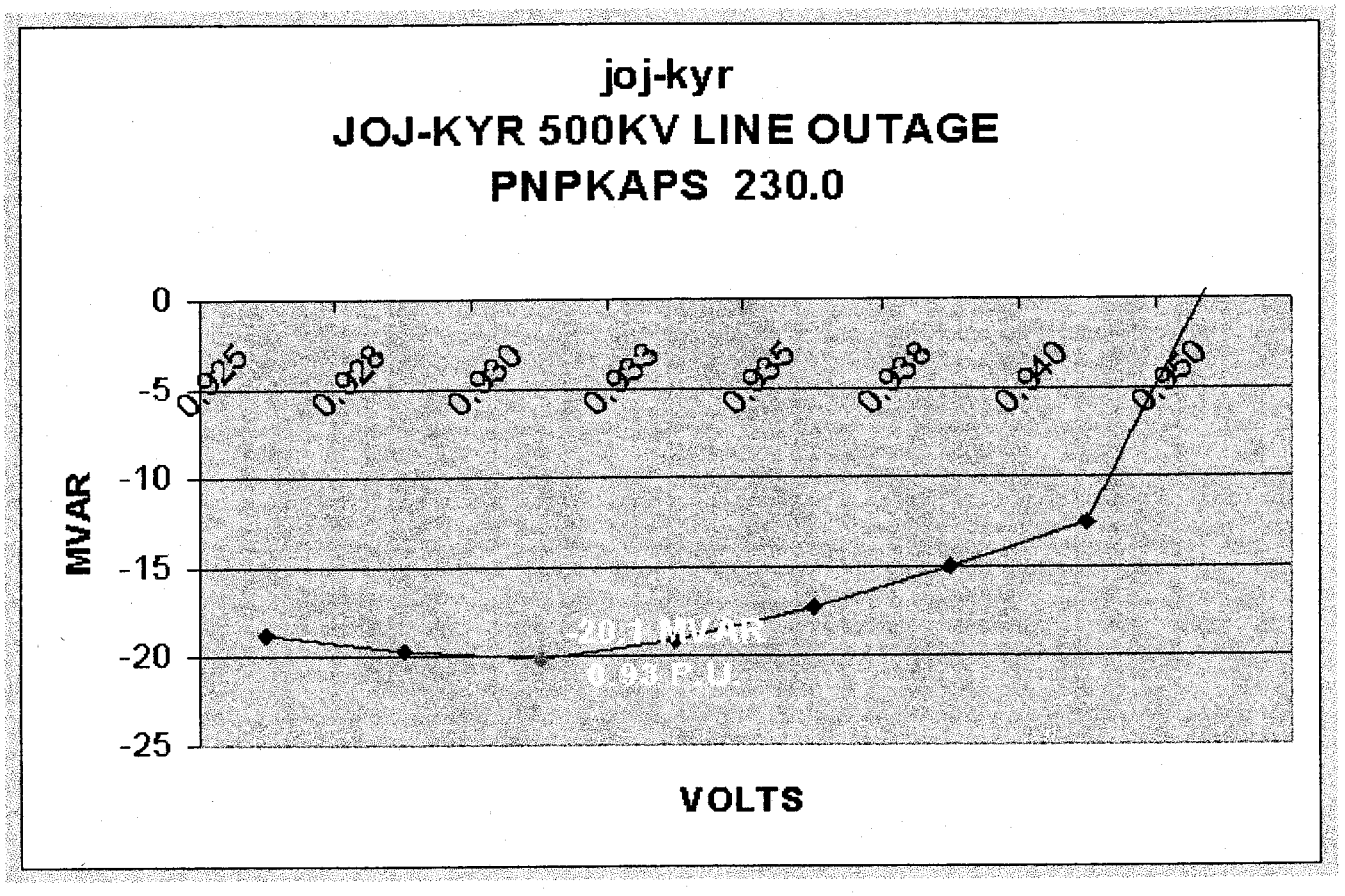

A 100

VOLTS	MVAR
0.97	-26.06
0.9675	-28.70
0.965	-27.92

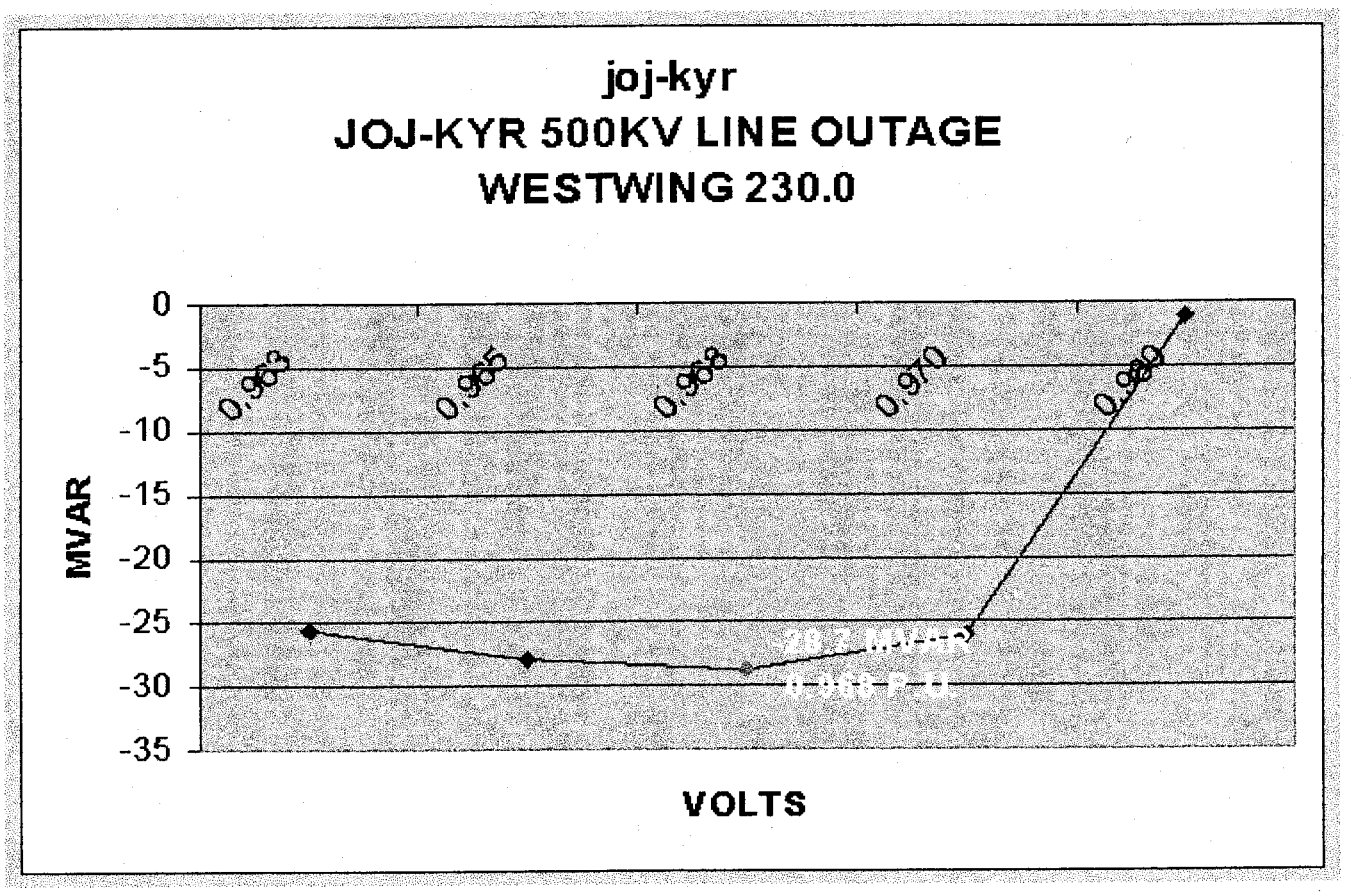

A101

A102

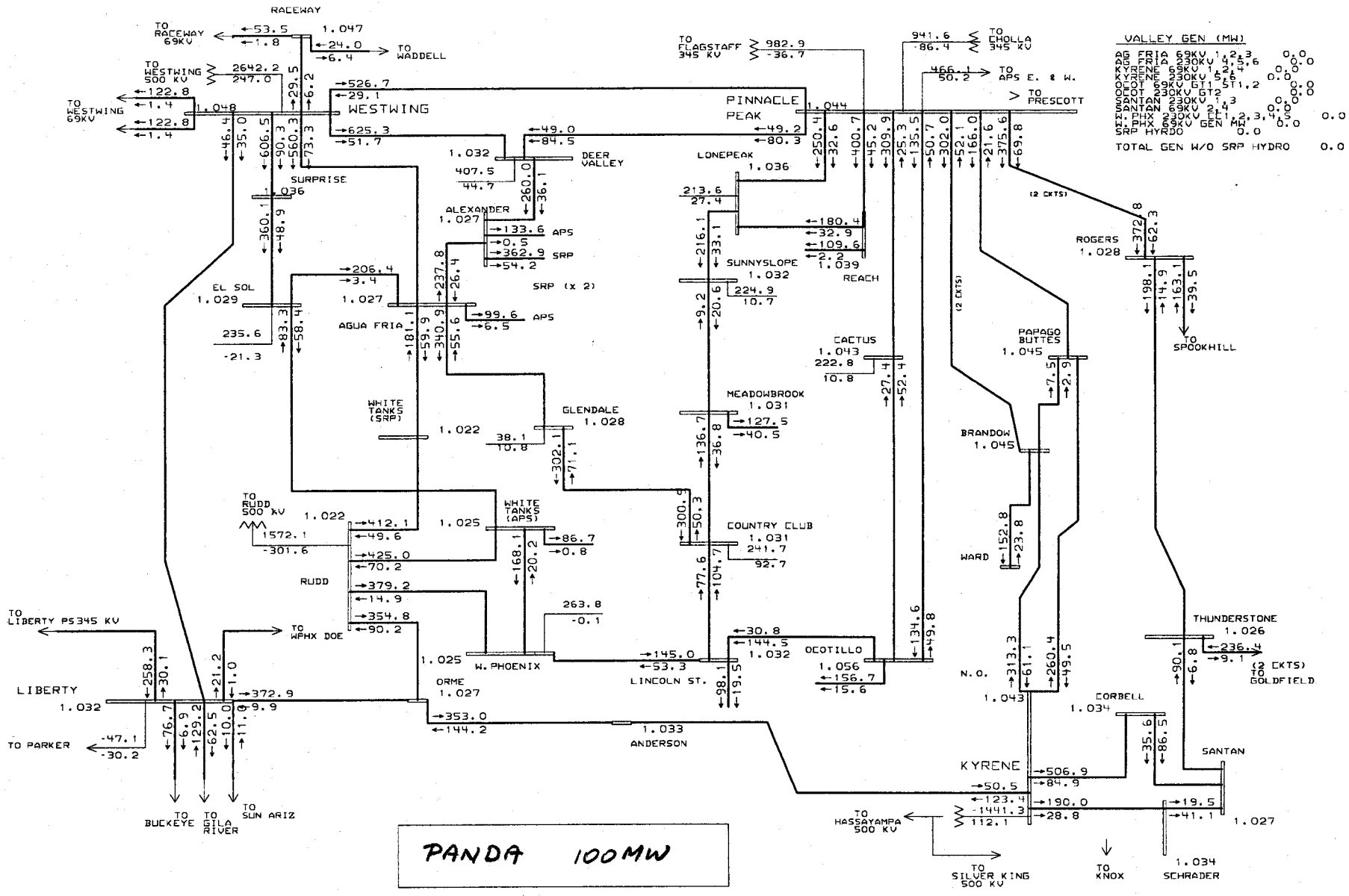

PHOENIX AREA 230KV SYSTEM

General Electric International, Inc. PSLF Program MW/MVAR Thu Jan 30 09:55:42 2003

Summer 2002 Coordinated Basecase ----- 3/11/2002
Arizona rep from VOP2001 basecase, WSCC Bulk case 2002hs3b
APS Rep updated as of 3/11/02. SRP Rep from VOP2001

2005zero_gilrv_100reduc no var margin
final changes from APS,SRP,WAPA for 2005

C:\upslf131\w-area\met230_03a.
C:\upslf131\w-area\2005zero_gi
Rating = 2

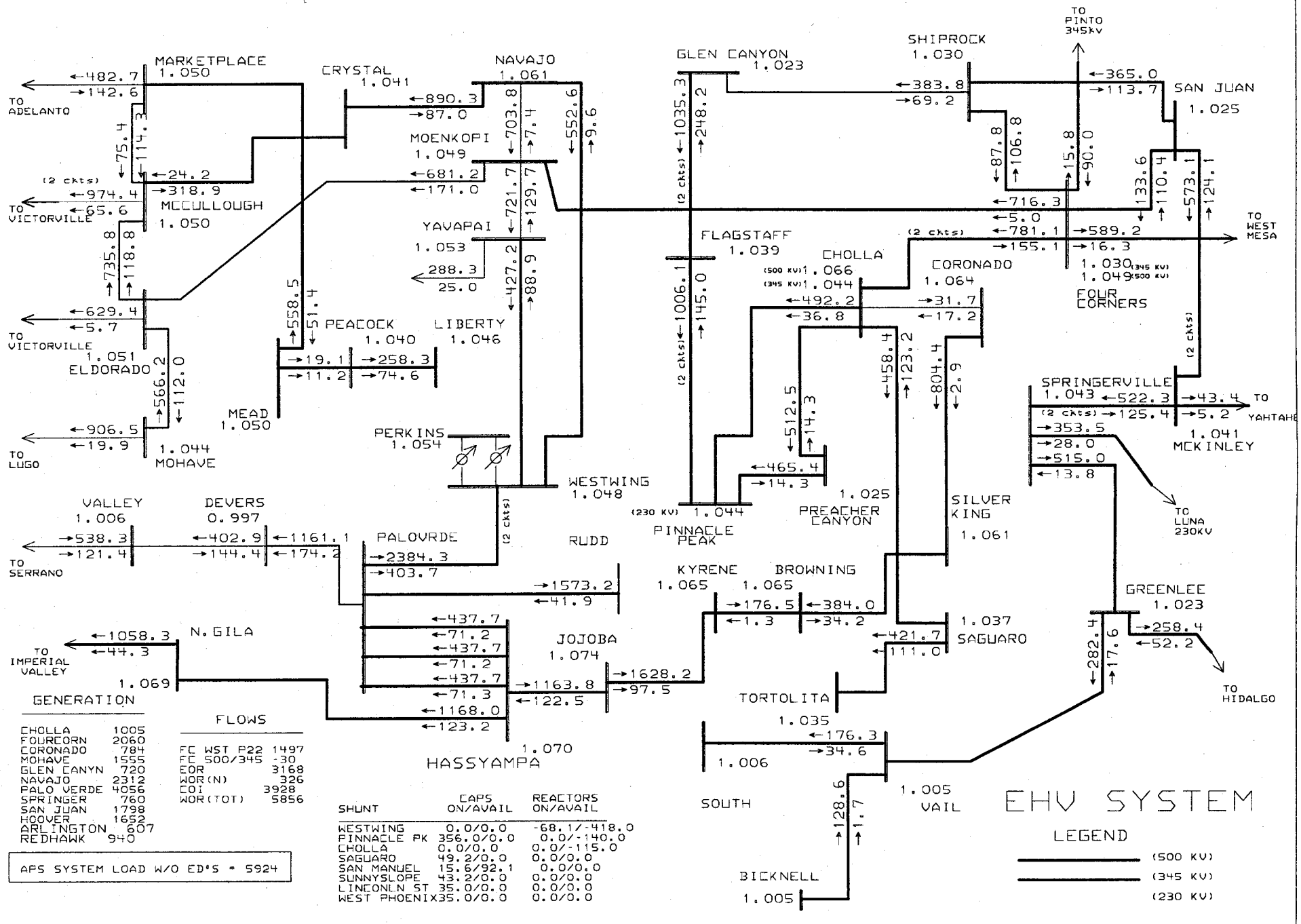

General Electric International, Inc. PSLF Program MW/MVAR Thu Jan 30 09:55:13 2003

Summer 2002 Coordinated Basecase ----- 3/11/2002
Arizona rep from VOP2001 basecase, WSCC Bulk case 2002hs3b
APS Rep updated as of 3/11/02. SRP Rep from VOP2001

2005zero_gilrv_100reduc no var margin
final changes from APS,SRP,WAPA for 2005

c:\ups1f131\w-area\ehv03.drw
c:\ups1f131\w-area\2005zero_gi
Rating = 2

A103

VOLTS	MVAR
0.9375	-10.24
0.935	-10.44
0.9325	-10.33

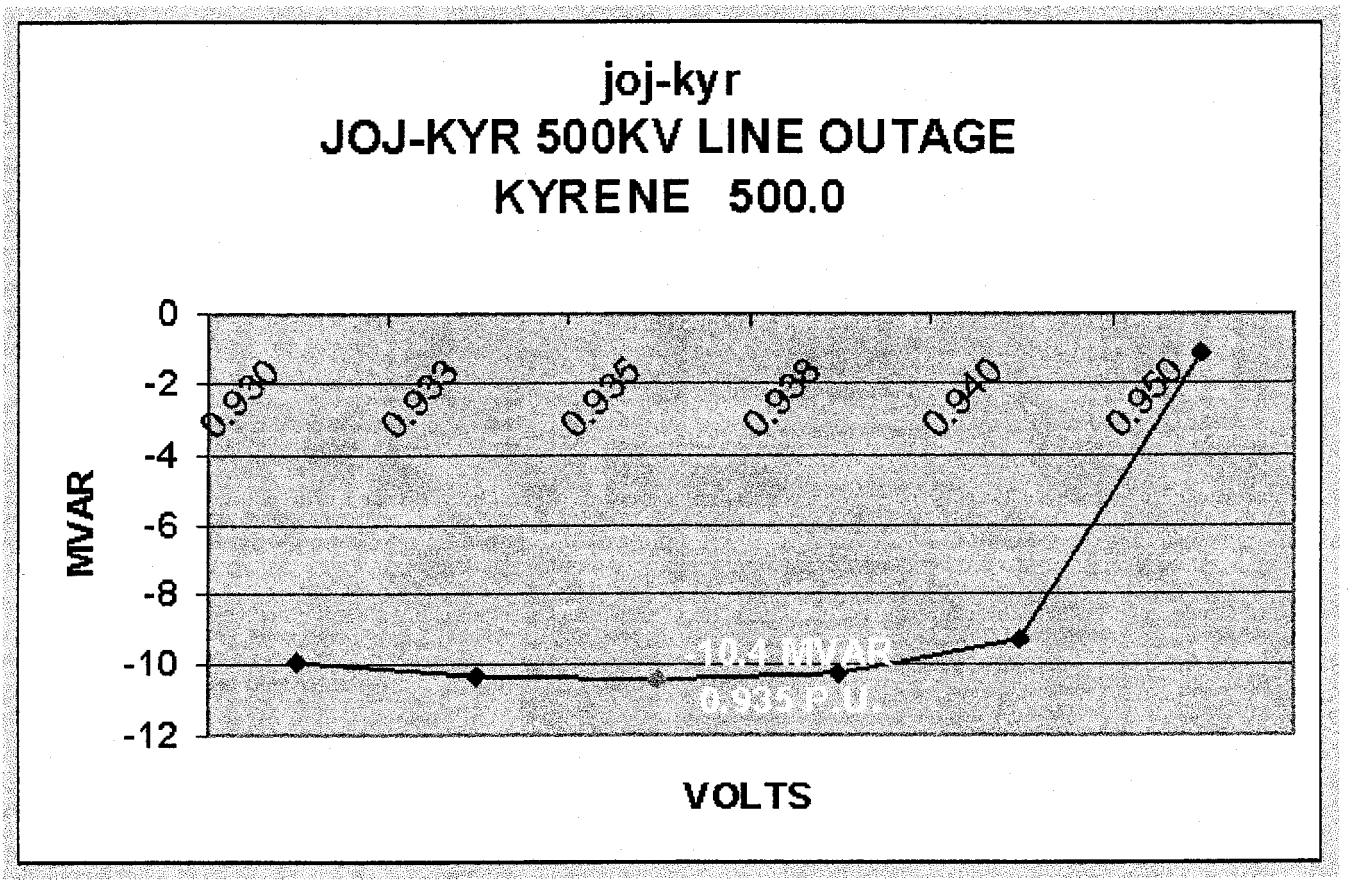

A104

VOLTS	MVAR
0.915	-10.34
0.9125	-10.50
0.91	-10.33

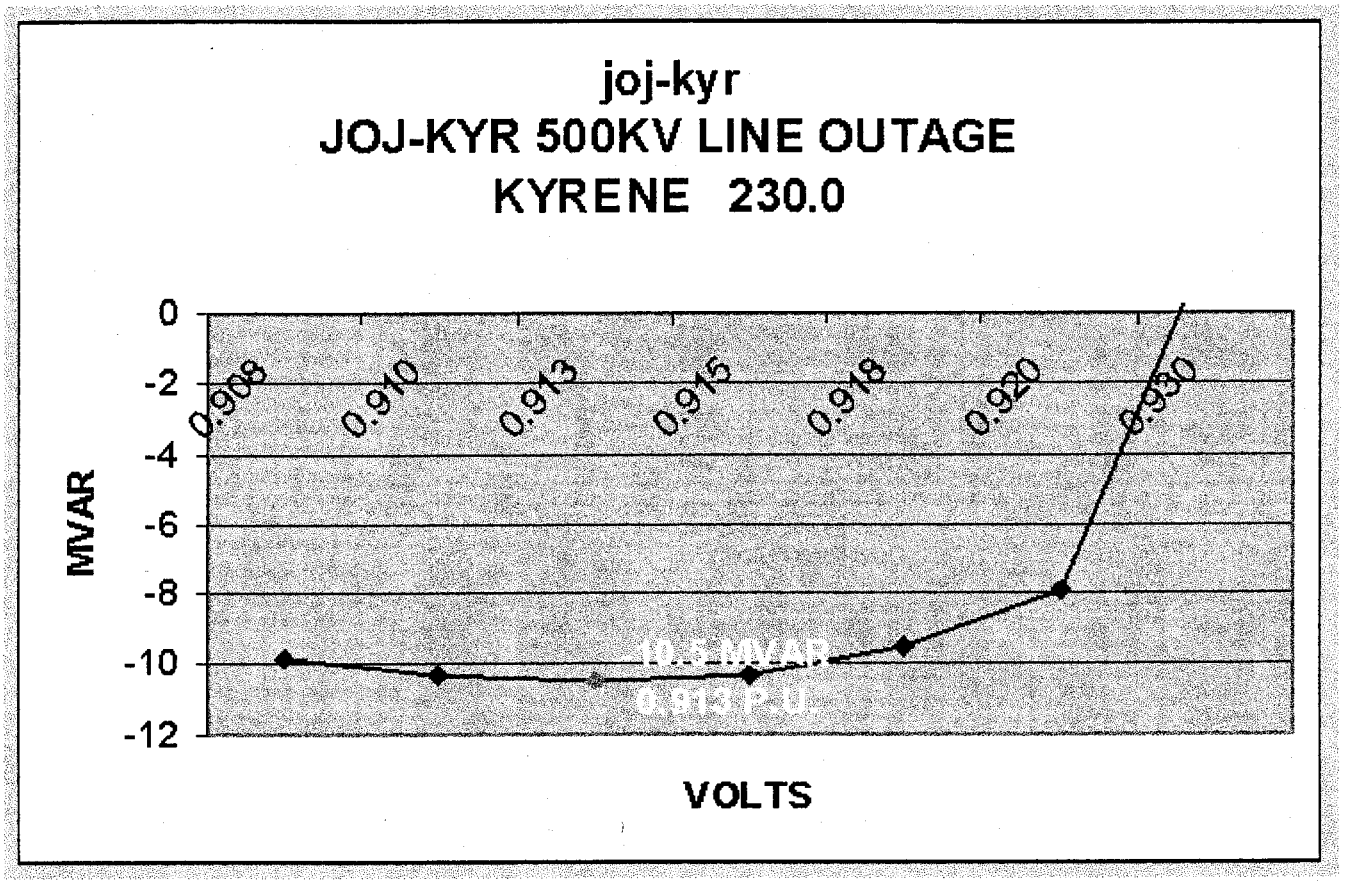

A105

VOLTS	MVAR
0.935	-11.36
0.9325	-11.79
0.93	-11.73

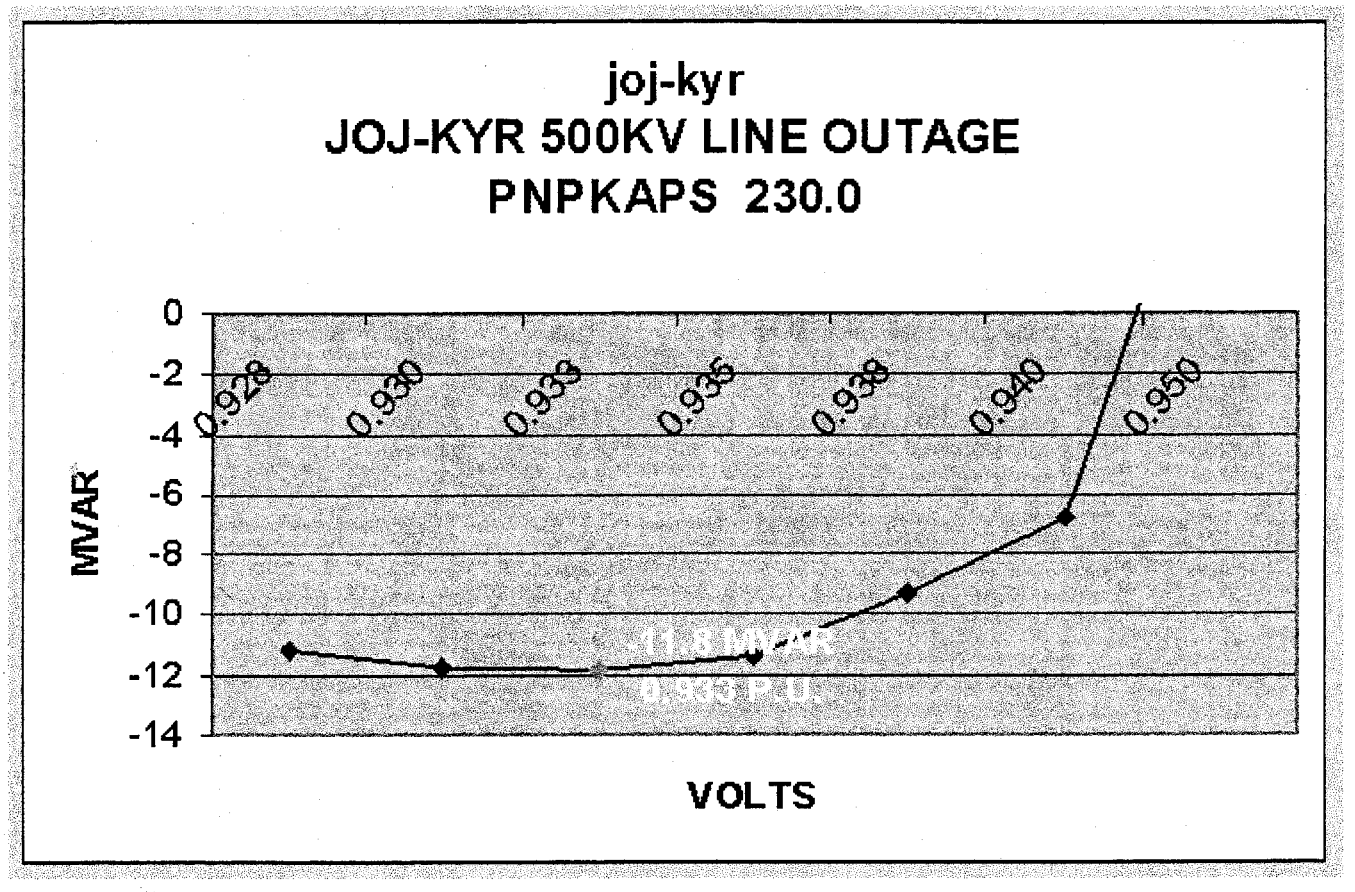

A 106

VOLTS	MVAR
0.97	-16.30
0.9675	-16.80
0.965	-15.93

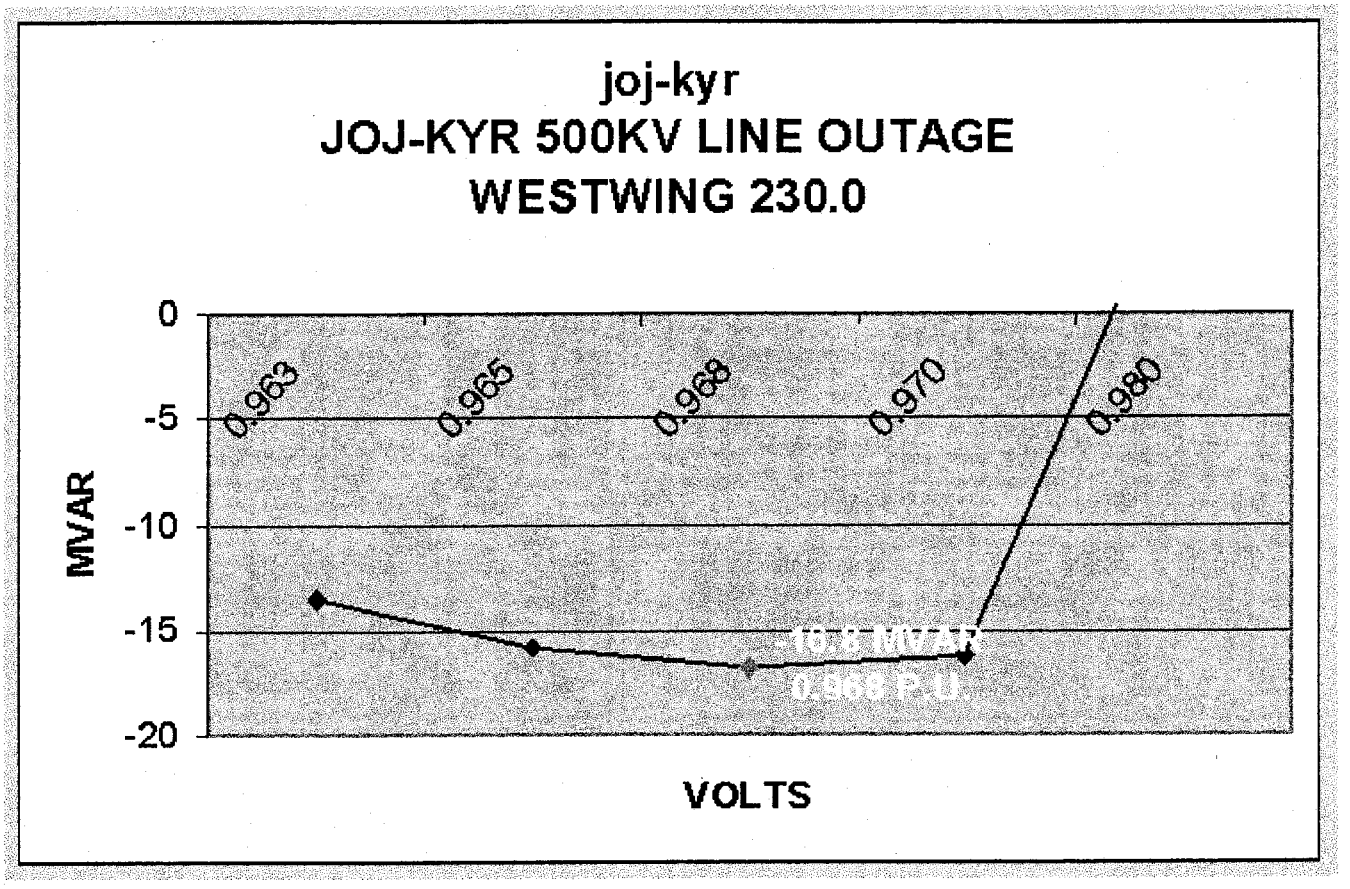

A107

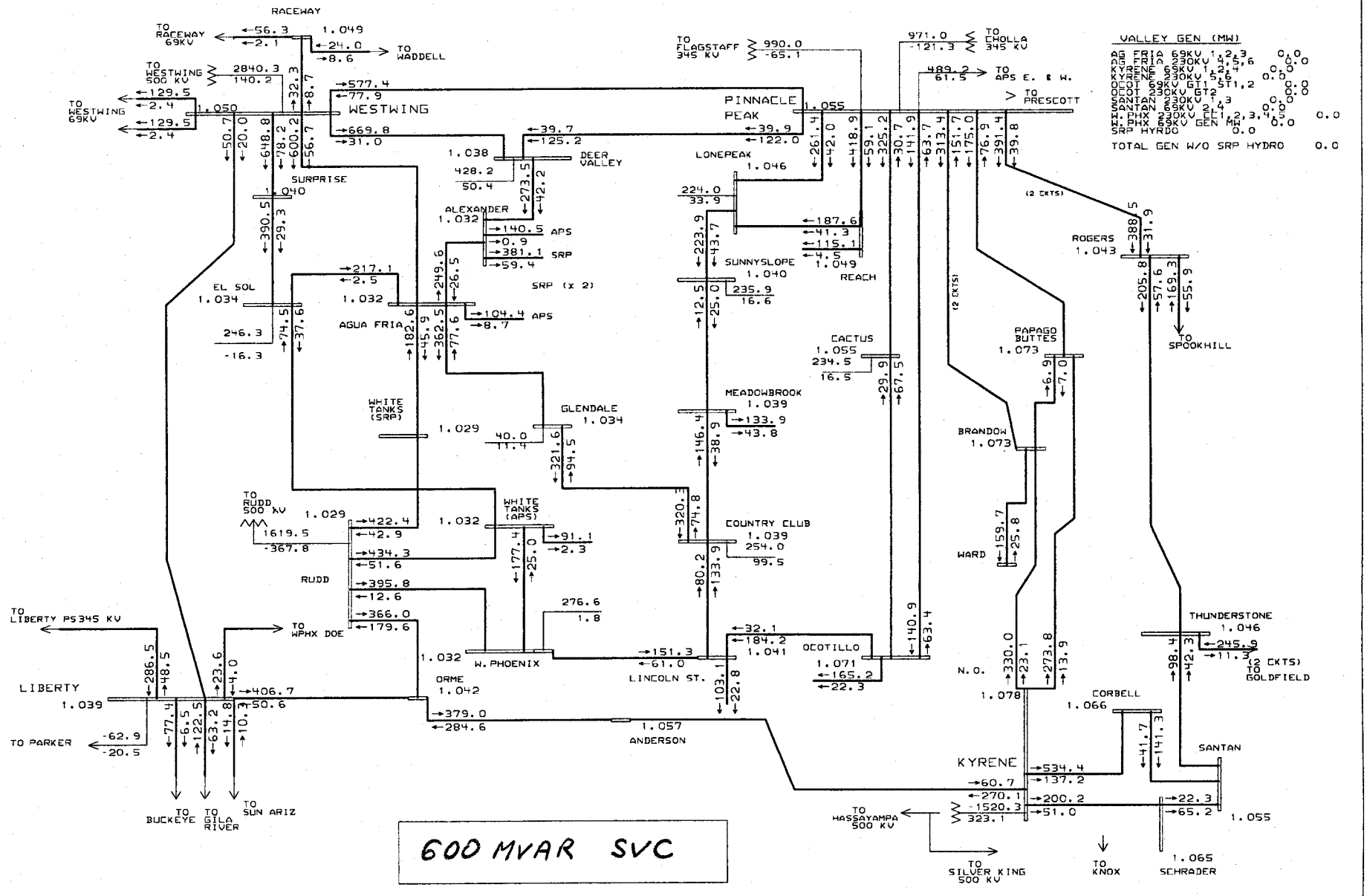

PHOENIX AREA 230KV SYSTEM

A108

General Electric International, Inc. PSLF Program MW/MVAR Thu Jan 30 09:45:57 2003

Summer 2002 Coordinated Basecase ----- 3/11/2002
Arizona rep from VOP2001 basecase, WSCC Bulk case 2002hs3b
APS Rep updated as of 3/11/02. SRP Rep from VOP2001

2005zero_4200haa_9645mw_600caps no var margin
final changes from APS,SRP,WAPA for 2005,

c:\upslf131\w-area\met230_03a.
c:\upslf131\w-area\2005zero_42
Rating = 2

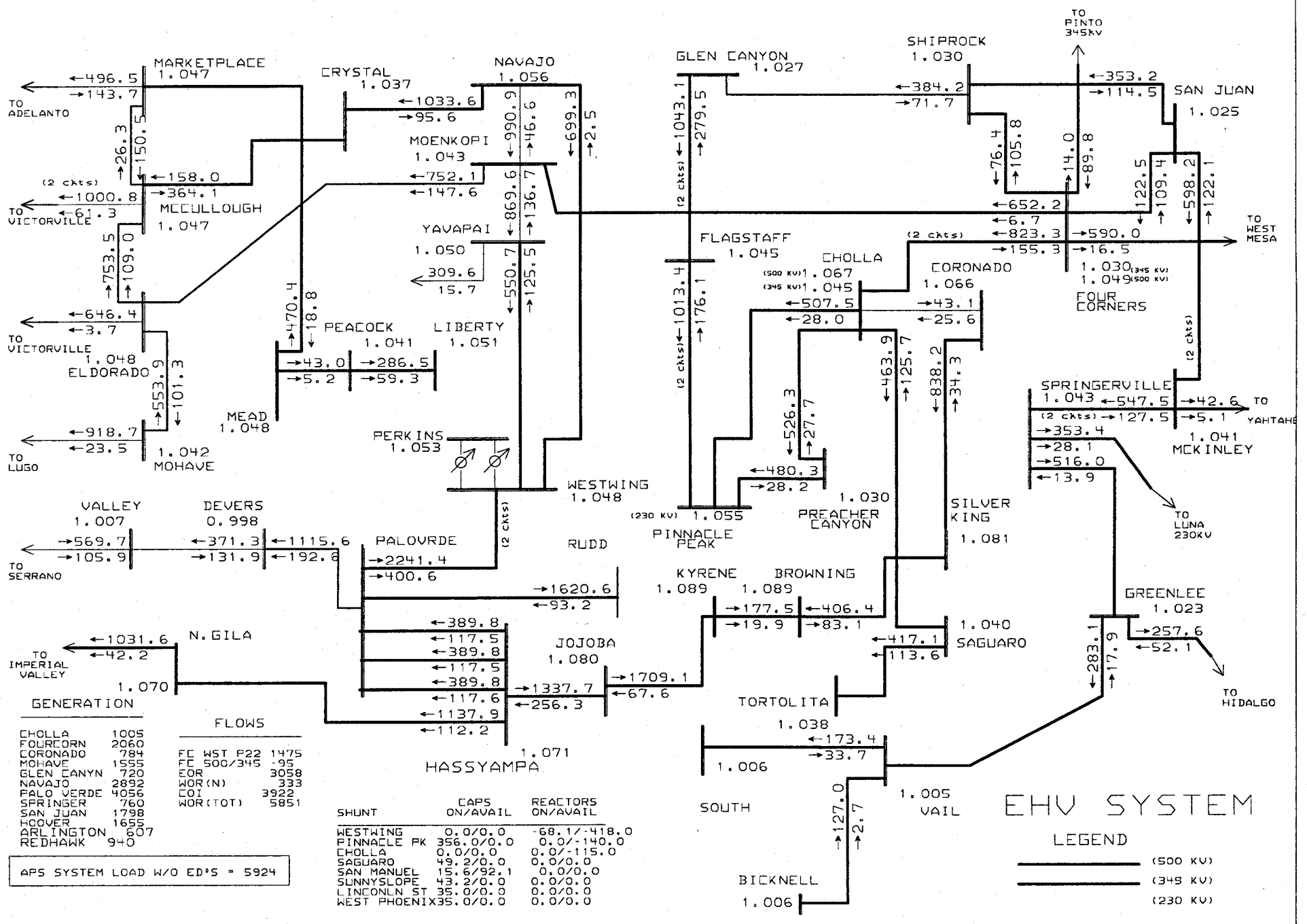

GENERATION

CHOLLA	1005
FOURCORN	2060
CORONADO	784
MOHAVE	1555
GLEN CANYN	720
NAVAJO	2892
PALO VERDE	4056
SPRINGER	760
SAN JUAN	1798
HOOVER	1655
ARLINGTON	607
REDHAWK	940

FLOWS

FC WST P22	1475
FC 500/345	-95
EOR	3058
WOR(N)	333
COI	3922
WOR(TOT)	5851

APS SYSTEM LOAD W/O ED'S = 5924

SHUNT	CAPS ON/AVAIL	REACTORS ON/AVAIL
WESTWING	0.0/0.0	-68.1/-418.0
PINNACLE PK	356.0/0.0	0.0/-140.0
CHOLLA	0.0/0.0	0.0/-115.0
SAGUARO	49.2/0.0	0.0/0.0
SAN MANUEL	15.6/92.1	0.0/0.0
SUNNYSLOPE	43.2/0.0	0.0/0.0
LINCONLN ST	35.0/0.0	0.0/0.0
WEST PHOENIX	35.0/0.0	0.0/0.0

A 109

General Electric International, Inc. PSLF Program MW/MVAR Thu Jan 30 09:45:30 2003

Summer 2002 Coordinated Basecase ----- 3/11/2002
Arizona rep from VOP2001 basecase, WSCC Bulk case 2002hs3b
APS Rep updated as of 3/11/02. SRP Rep from VOP2001

2005zero_4200haa_9645mw_600caps no var margin
final changes from APS,SRP,WAPA for 2005,

c:\upslf131\w-area\ehv03.drw
c:\upslf131\w-area\2005zero_42
Rating = 2

VOLTS	MVAR
0.965	-26.51
0.9625	-27.53
0.96	-27.51

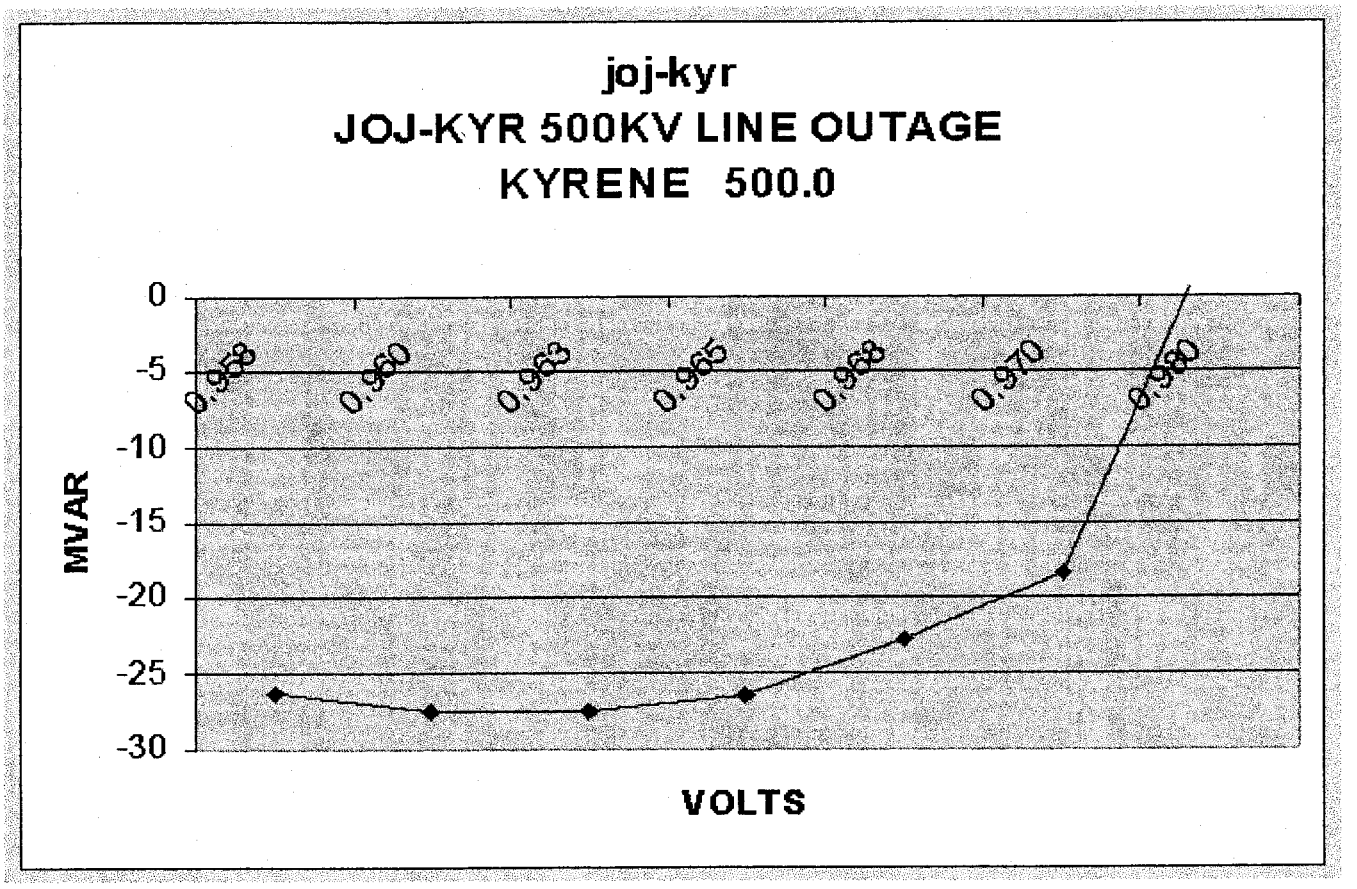

A110

VOLTS	MVAR
0.94	-27.42
0.9375	-27.84
0.935	-26.99

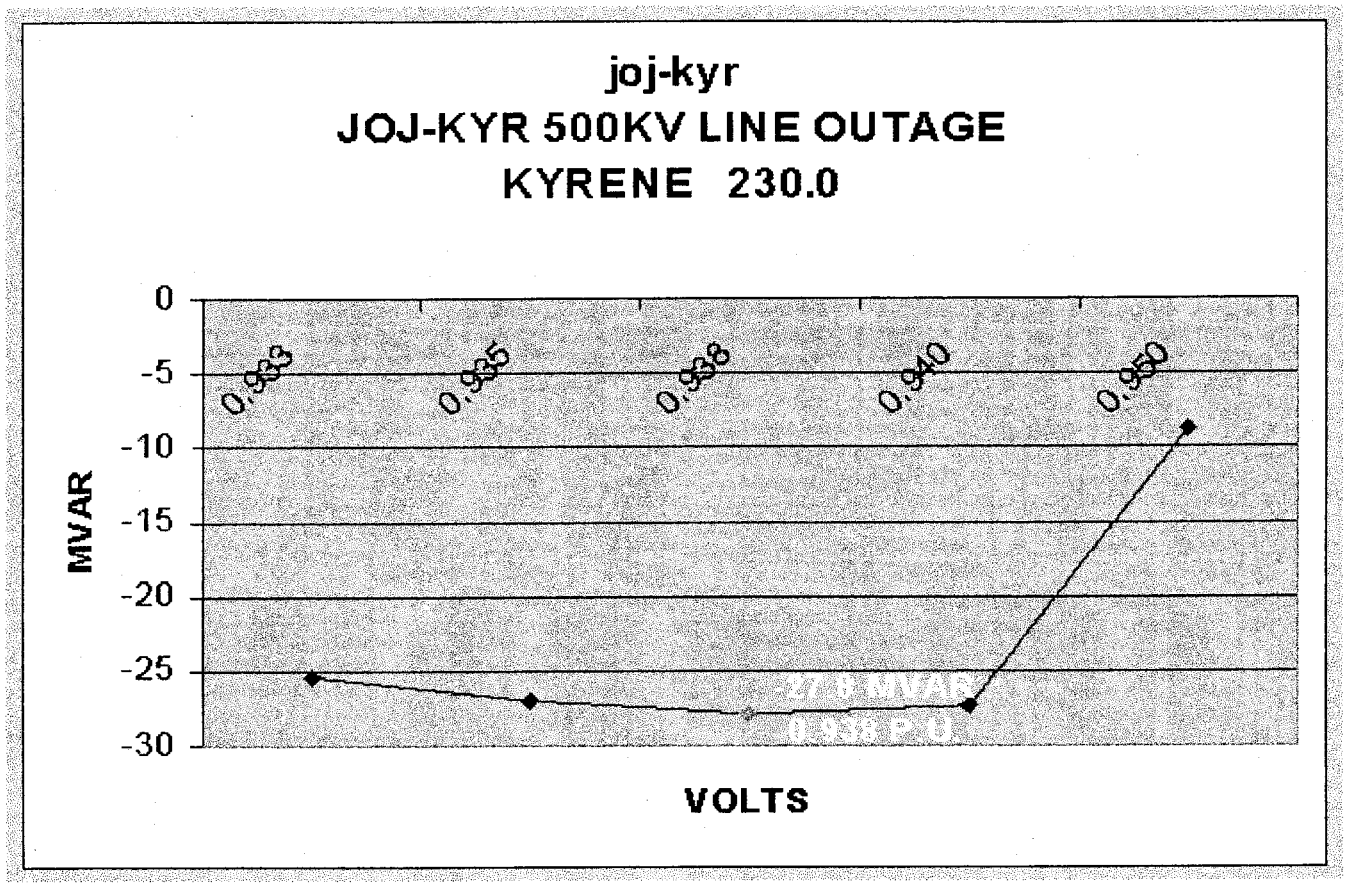

A111

VOLTS	MVAR
0.9375	-28.20
0.935	-28.34
0.9325	-27.06

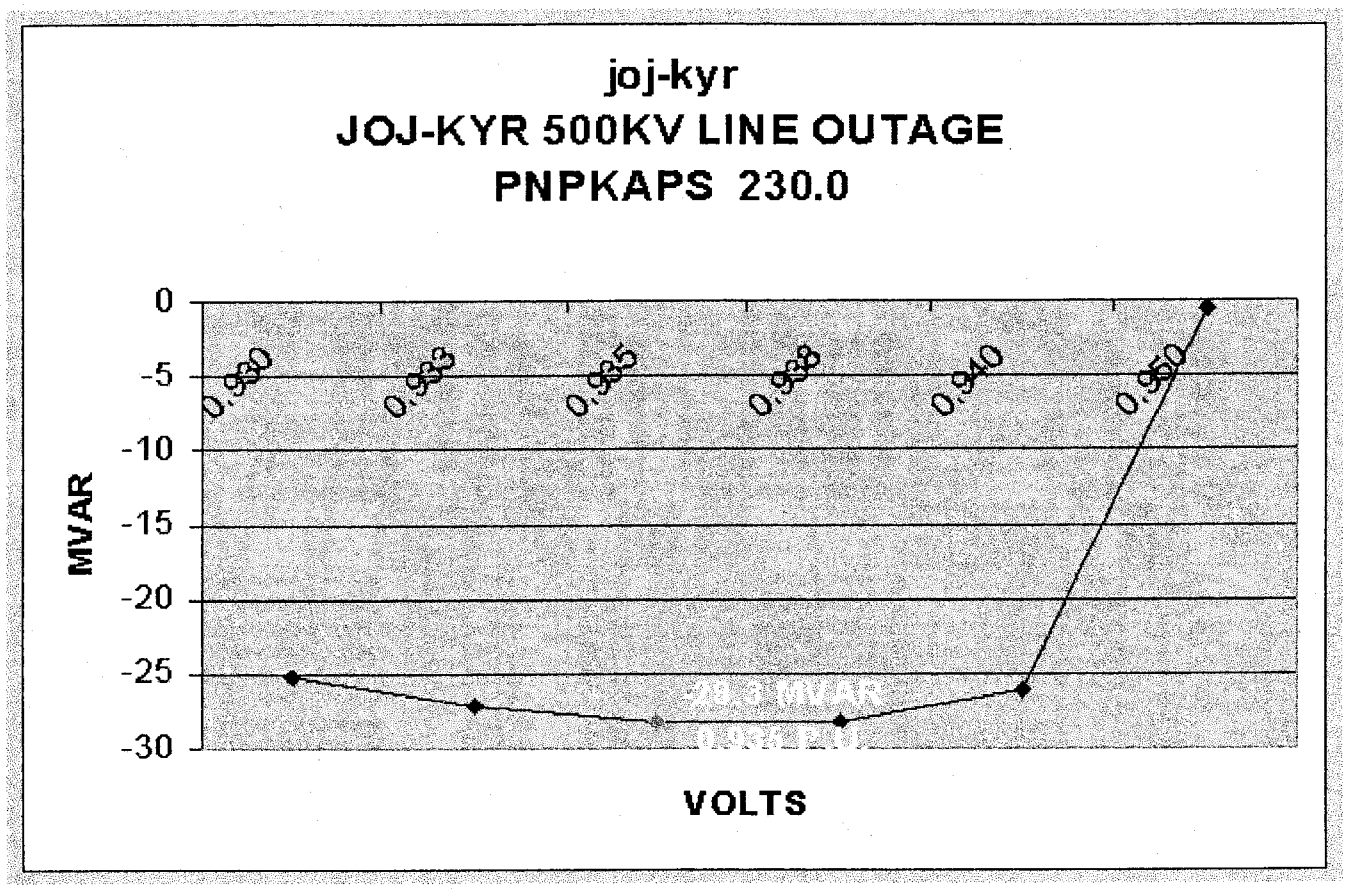

A112

VOLTS	MVAR
0.98	-29.16
0.975	-42.02
0.9725	-39.84

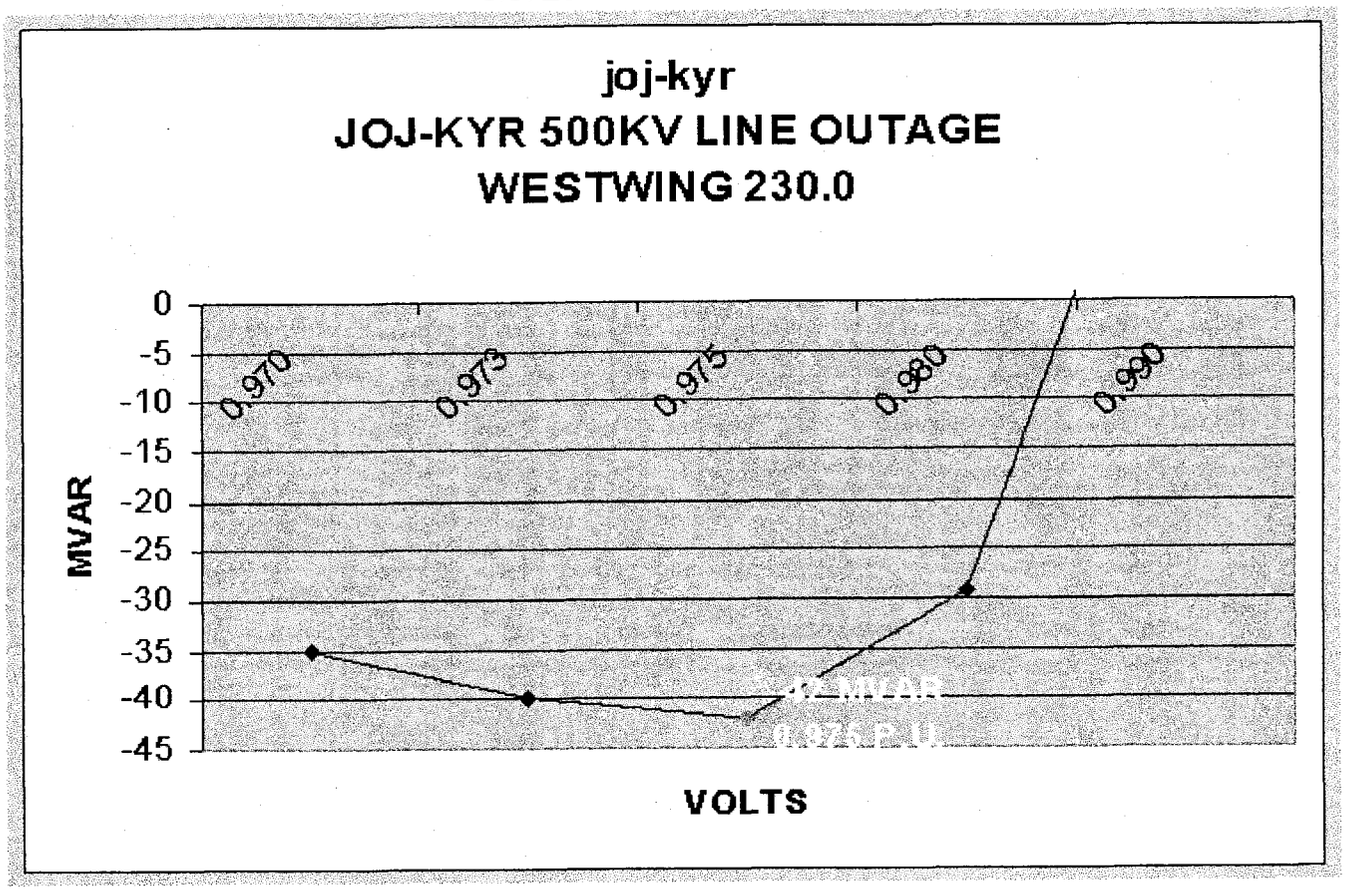

A113

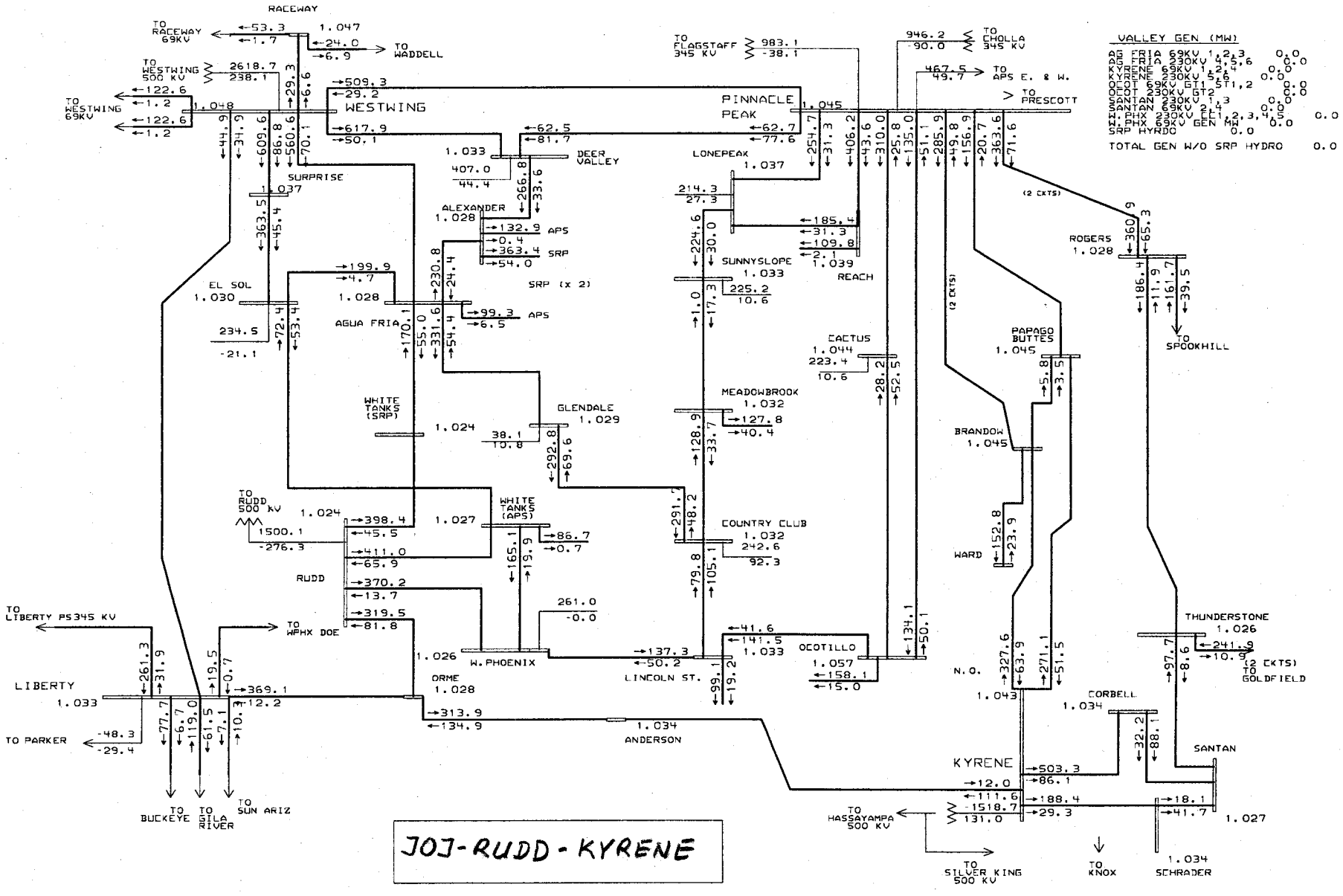

JOJ-RUDD-KYRENE

PHOENIX AREA 230KV SYSTEM

A 114

General Electric International, Inc. PSLF Program MW/MVAR Thu Jan 30 09:37:44 2003

Summer 2002 Coordinated Basecase ----- 3/11/2002
Arizona rep from VOP2001 basecase, WSCC Bulk case 2002hs3b
APS Rep updated as of 3/11/02. SRP Rep from VOP2001

2005zero_9193_joj_rudd_kyr no var margin
final changes from APS,SRP,WAPA for 2005

c:\upslf131\w-area\met230_03a.
c:\upslf131\w-area\2005zero_91
Rating = 2

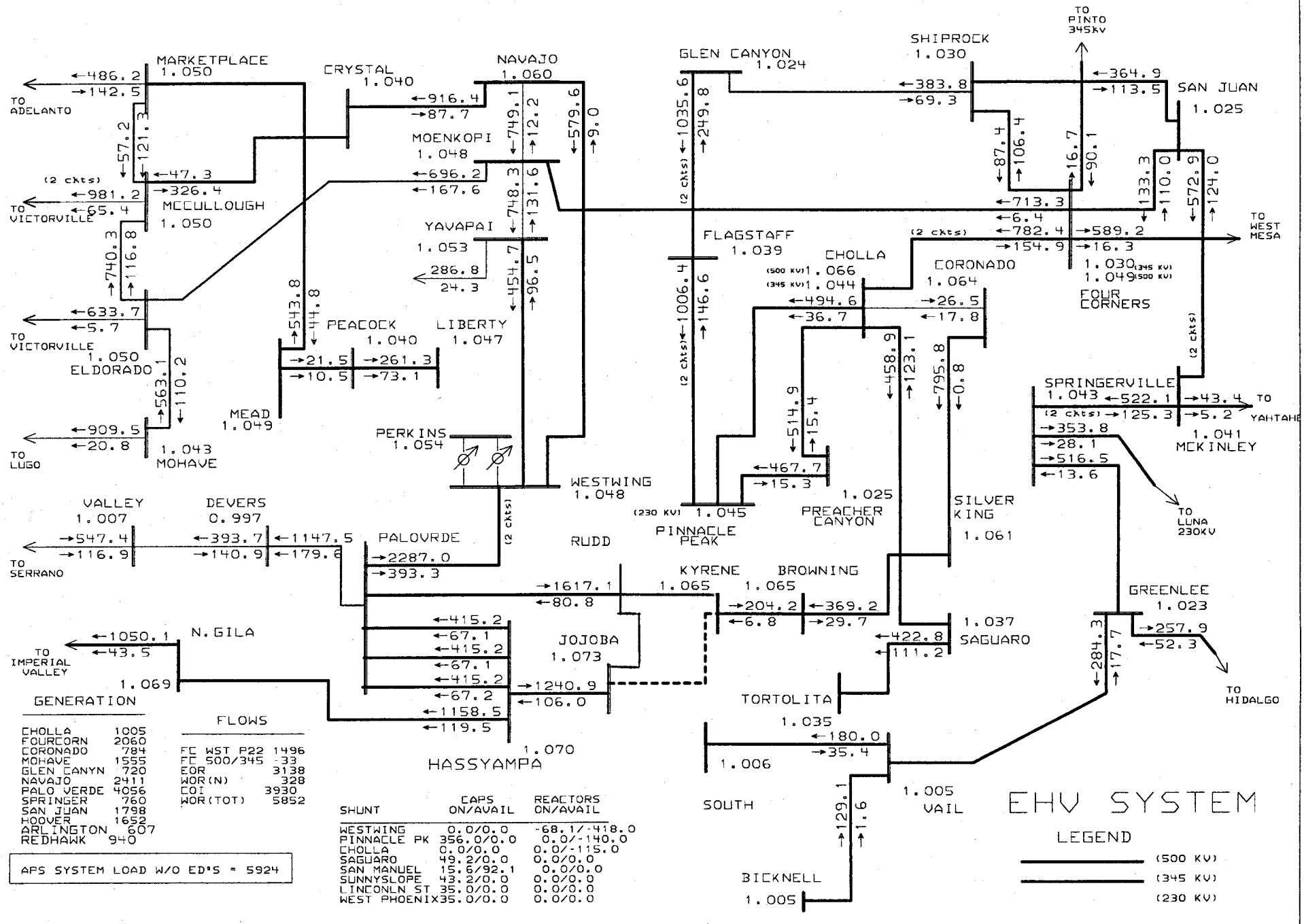

GENERATION

CHOLLA	1005
FOURCORN	2060
CORONADO	784
MOHAVE	1555
GLEN CANYN	720
NAVAJO	2411
PALO VERDE	4056
SPRINGER	760
SAN JUAN	1798
HOOVER	1652
ARLINGTON	607
REDHAWK	940

FLOWS

FC WST P22	1496
FC 500/345	-33
EOR	3138
WOR(N)	328
COI	3930
WOR(TOT)	5852

APS SYSTEM LOAD W/O ED'S = 5924

SHUNT	CAPS ON/AVAIL	REACTORS ON/AVAIL
WESTWING	0.0/0.0	-68.1/-418.0
PINNACLE PK	356.0/0.0	0.0/-140.0
CHOLLA	0.0/0.0	0.0/-115.0
SAGUARO	49.2/0.0	0.0/0.0
SAN MANUEL	15.6/92.1	0.0/0.0
SUNNYSLOPE	43.2/0.0	0.0/0.0
LINCONLN ST	35.0/0.0	0.0/0.0
WEST PHOENIX	35.0/0.0	0.0/0.0

A115

General Electric International, Inc. PSLF Program MW/MVAR Thu Jan 30 09:37:08 2003

Summer 2002 Coordinated Basecase ----- 3/11/2002
Arizona rep from VOP2001 basecase, WSCC Bulk case 2002hs3b
APS Rep updated as of 3/11/02. SRP Rep from VOP2001

2005zero_9193_joj_rudd_kyr no var margin
final changes from APS,SRP,WAPA for 2005

c:\upslf131\w-area\ehv03.drw
c:\upslf131\w-area\2005zero_91
Rating = 2

VOLTS	MVAR
0.9025	-237.67
0.9	-238.25
0.8975	-237.85

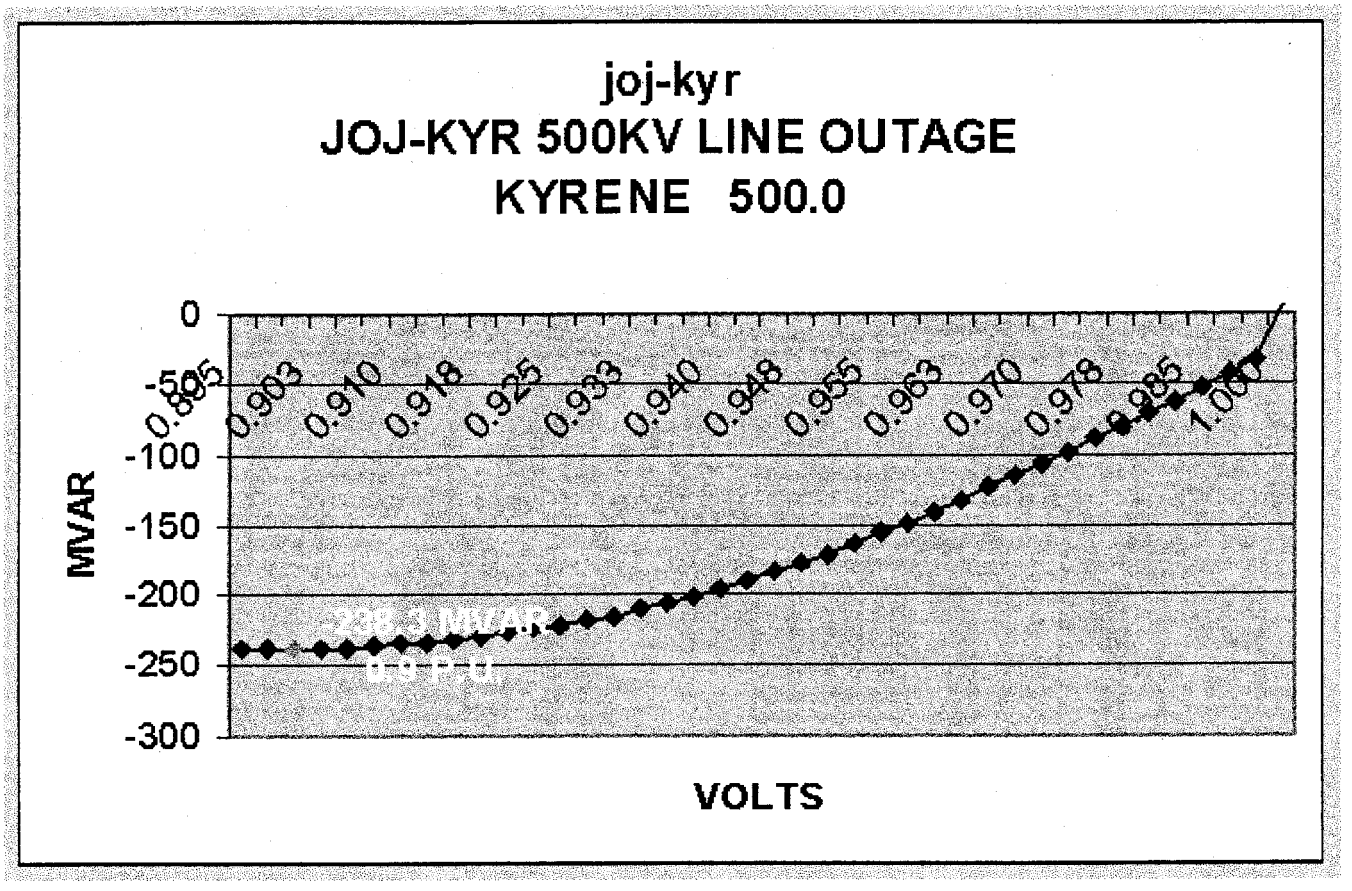

A116

VOLTS	MVAR
0.89	-242.38
0.8875	-242.55
0.885	-241.91

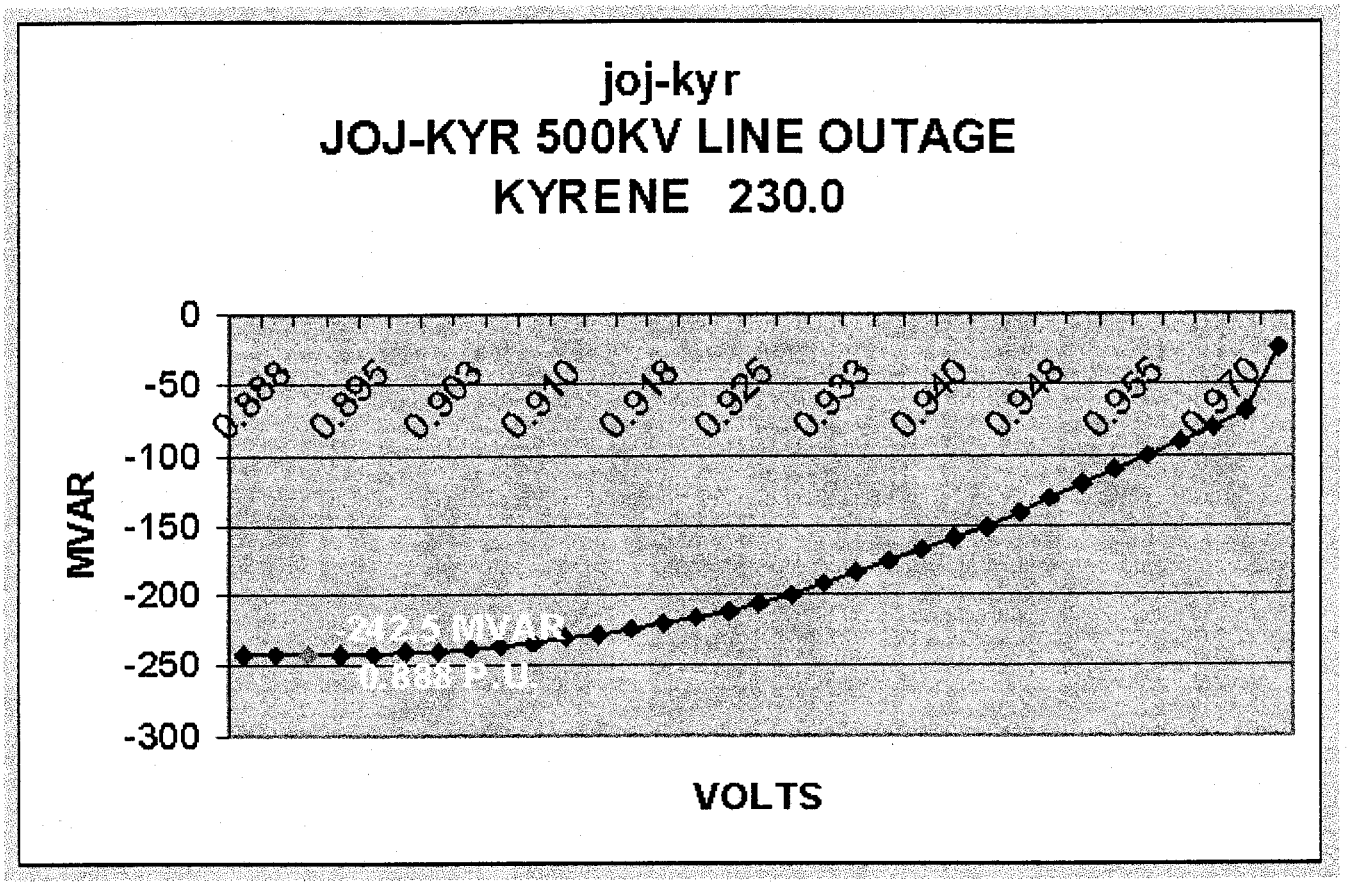

A117

VOLTS	MVAR
0.9175	-278.14
0.915	-278.71
0.9125	-278.39

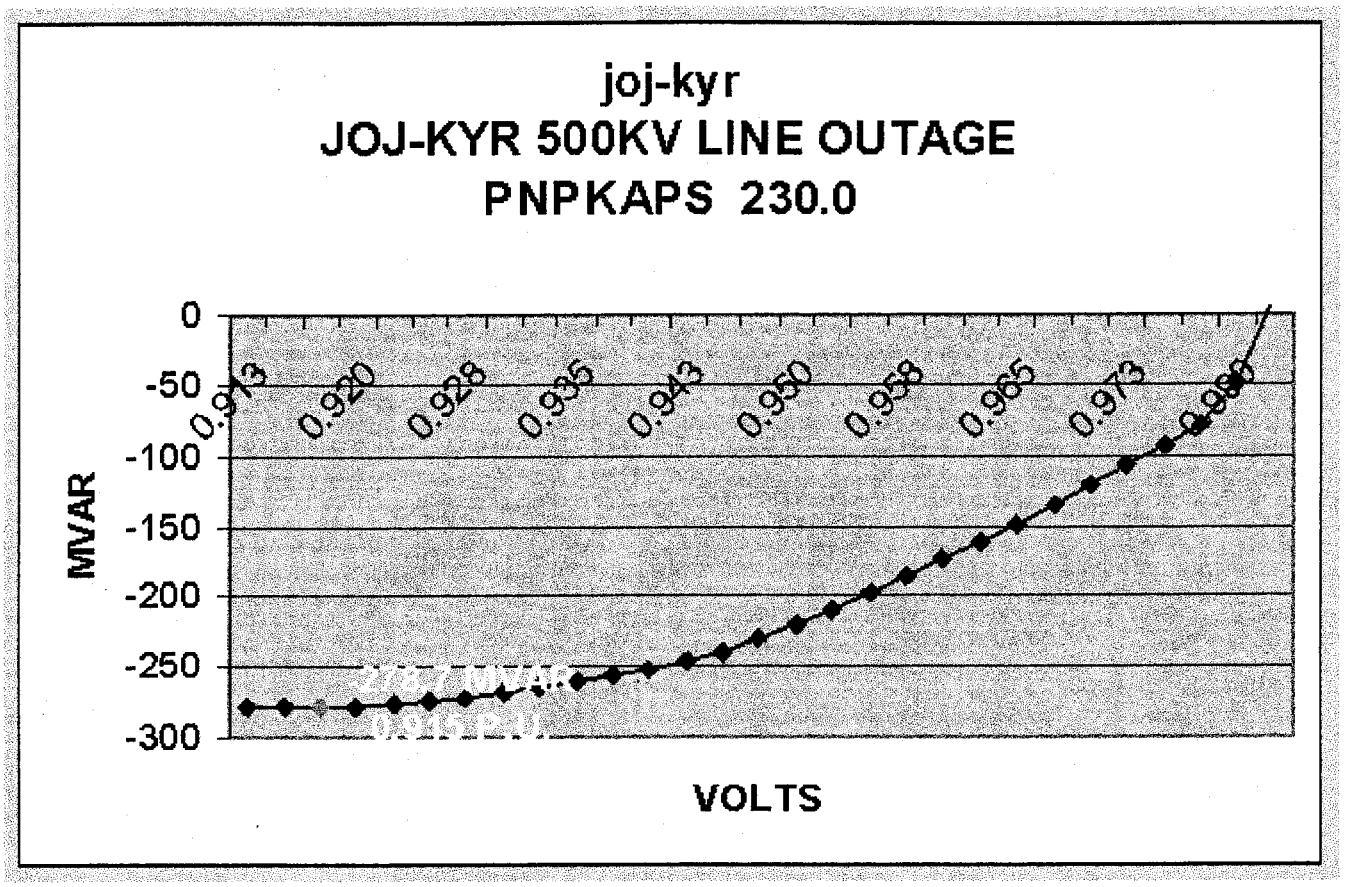

A118

VOLTS	MVAR
0.955	-403.51
0.9525	-404.50
0.95	-404.12

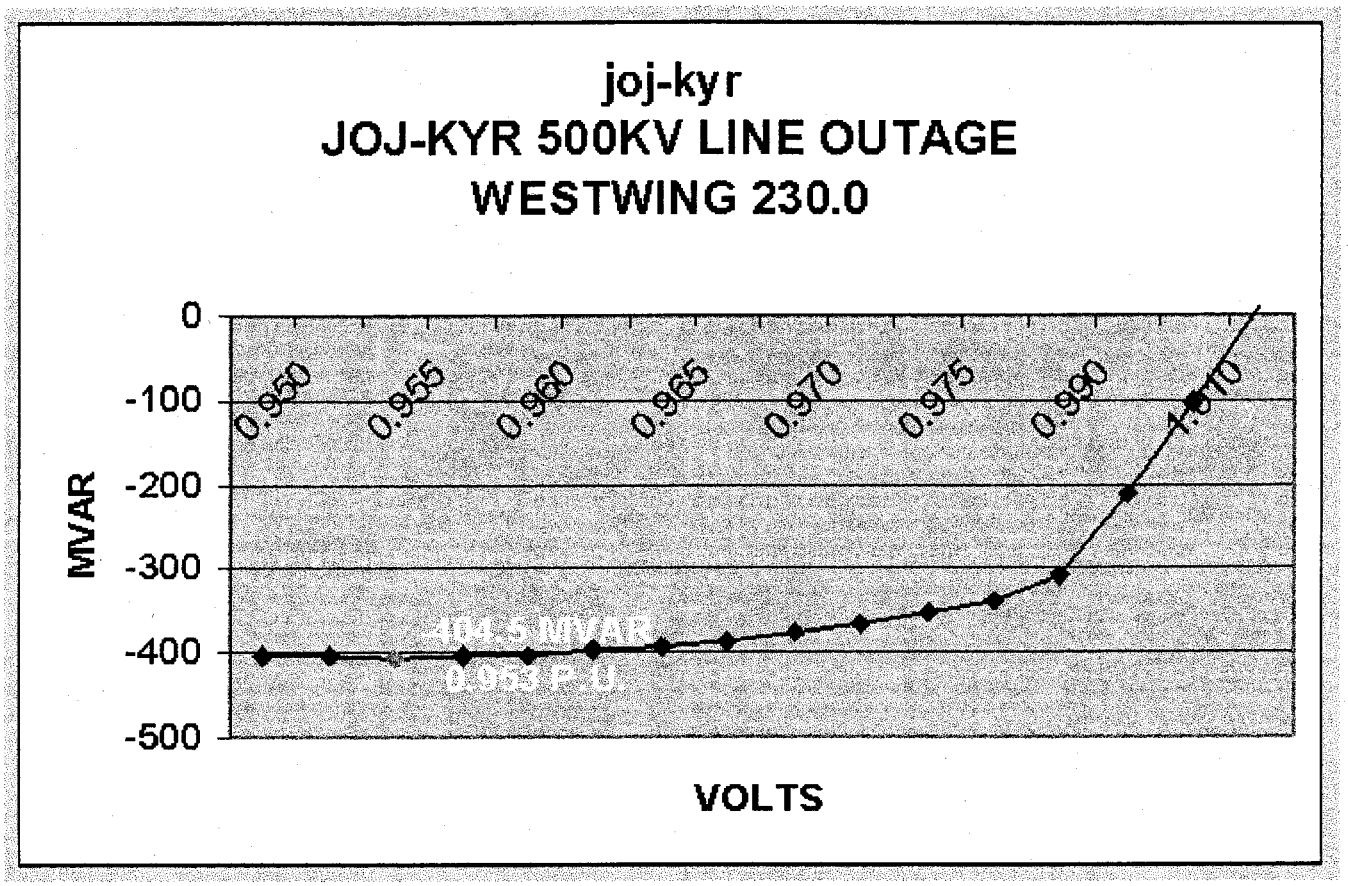

A119

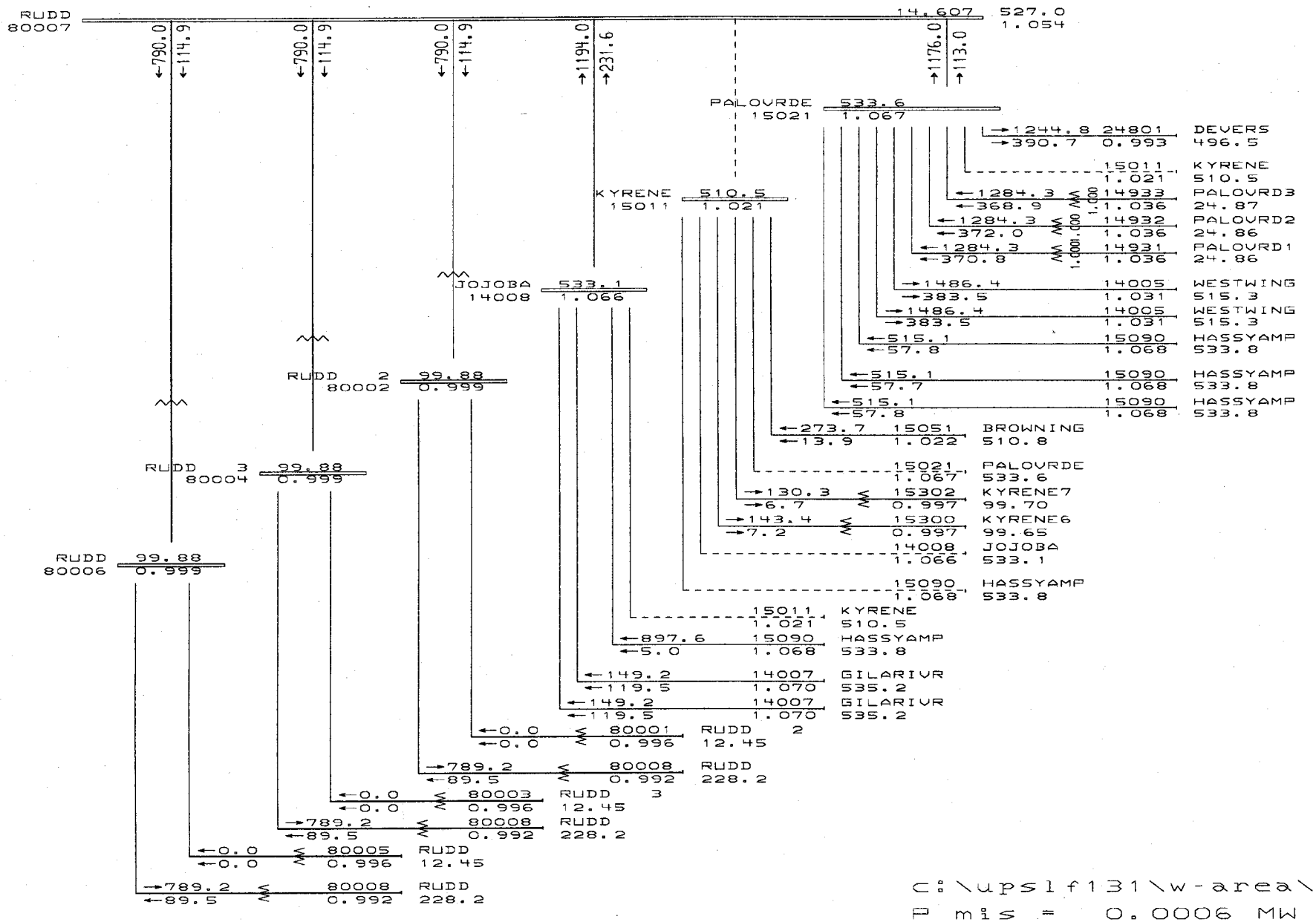

c:\upslf131\w-area\20
P mis = 0.0006 MW
Q mis = -0.0012 MVAR

A120

General Electric International, Inc. PSLF Program MW/MVAR Thu Jan 23 13:28:17 2003

Summer 2002 Coordinated Basecase ----- 3/11/2002
Arizona rep from VOP2001 basecase, WSCC Bulk case 2002hs3b
APS Rep updated as of 3/11/02. SRP Rep from VOP2001

Rudd,+450MVars,11 0.9099
final changes from APS,SRP,WAPA for 2004, Gila R. looped into Libert

c:\upslf131\w-area\2005zero_91
Rating = 2

YUMA DISTRICT

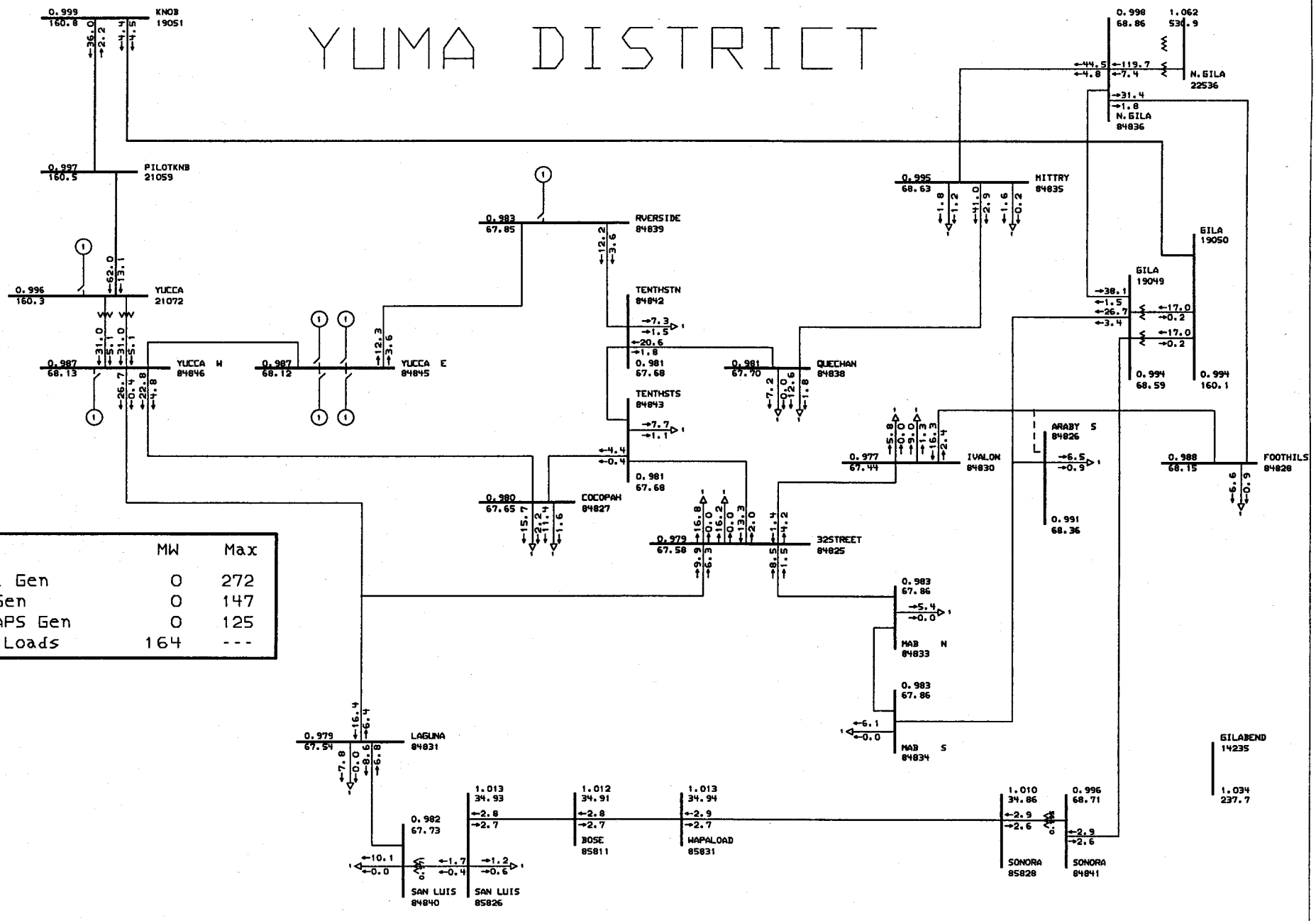

	MW	Max
Total Gen	0	272
APS Gen	0	147
Non-APS Gen	0	125
Yuma Loads	164	---

General Electric International, Inc. PSLF Program MW/MVAR Tue Dec 31 11:48:15 2002

APS

YUMA RMR STUDY //12-04-02

2003 Base Case//yuma03a //sm03428

c:\upslf13\yuma1.drw
c:\upslf13\yuma03a.sav
Rating = 1

4121

YUMA DISTRICT

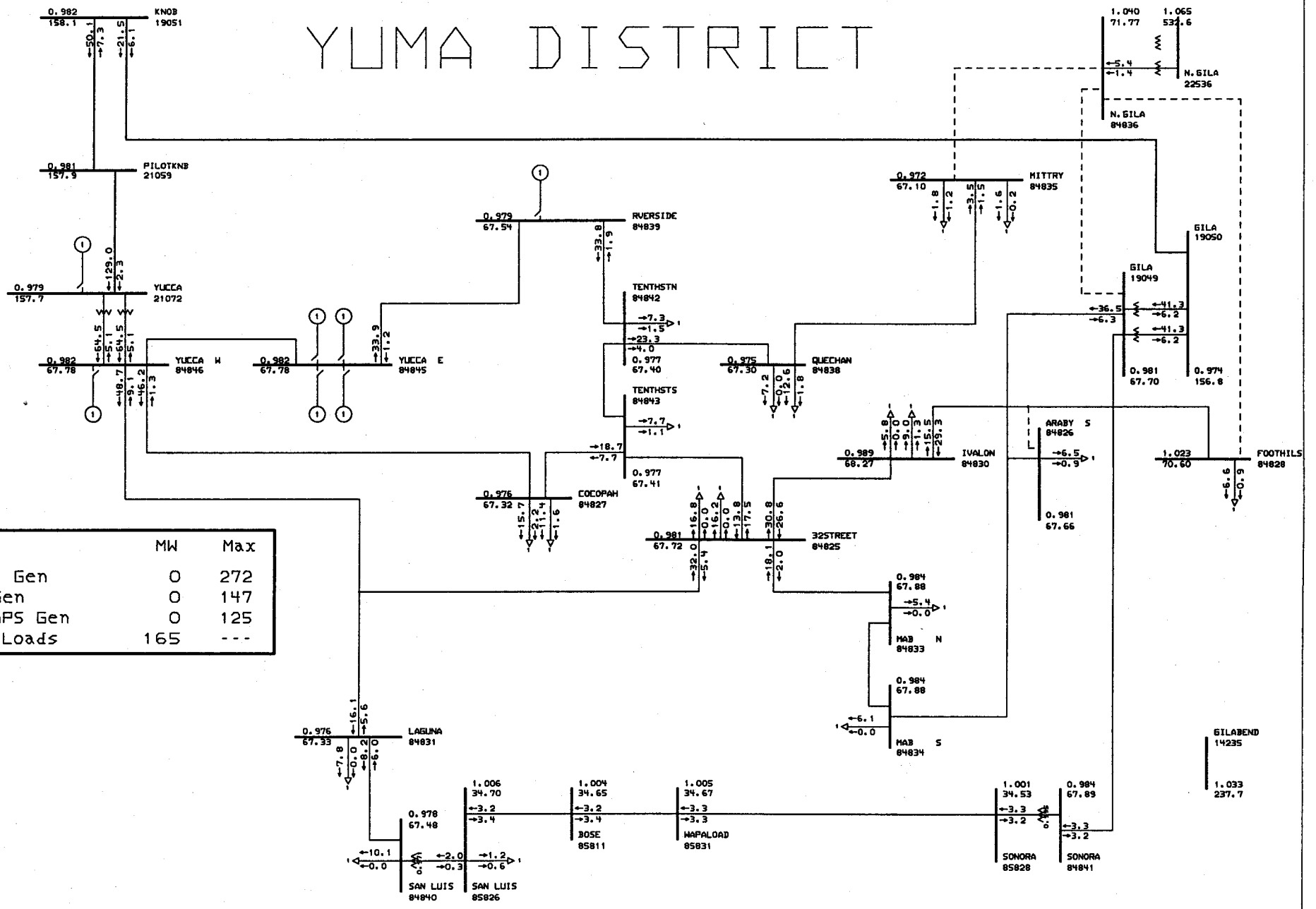

	MW	Max
Total Gen	0	272
APS Gen	0	147
Non-APS Gen	0	125
Yuma Loads	165	---

General Electric International, Inc. PSLF Program MW/MVAR Tue Dec 31 11:50:34 2002

APS

YUMA RMR STUDY //12-04-02
N.Gila XFMR outage
2003 Base Case//yuma03a //sm03#28

c:\upslf13\yuma1.drw
yuma03a.sav
Rating = 1

YUMA DISTRICT

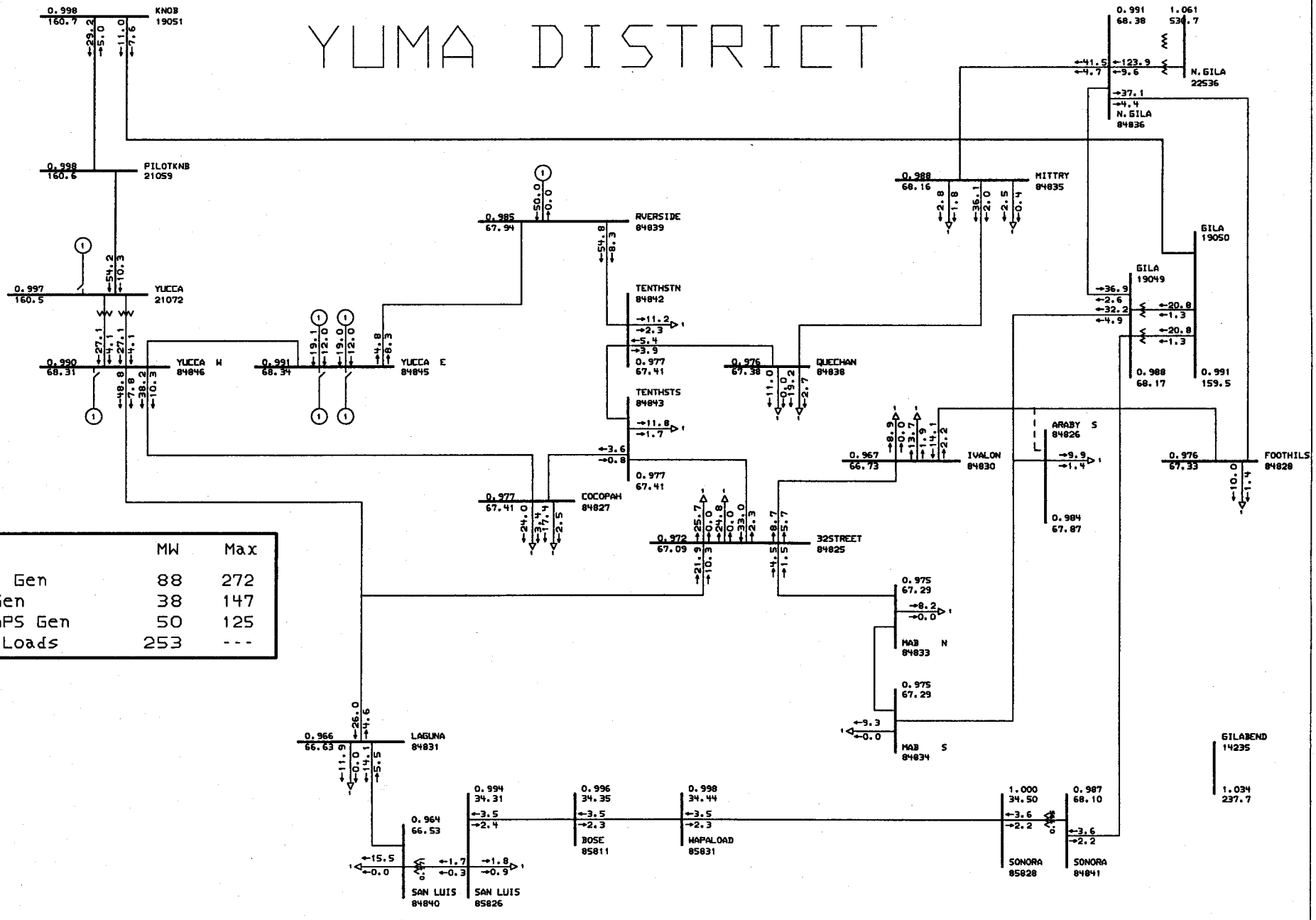

	MW	Max
Total Gen	88	272
APS Gen	38	147
Non-APS Gen	50	125
Yuma Loads	253	---

General Electric International, Inc. PSLF Program MW/MVAR Tue Dec 31 11:51:41 2002

APS

YUMA RMR STUDY //12-04-02

2003 Base Case//yuma03b //sm03#28

c:\upslf13\yuma1.drw
c:\upslf13\yuma03b.sav
Rating = 1

4172

YUMA DISTRICT

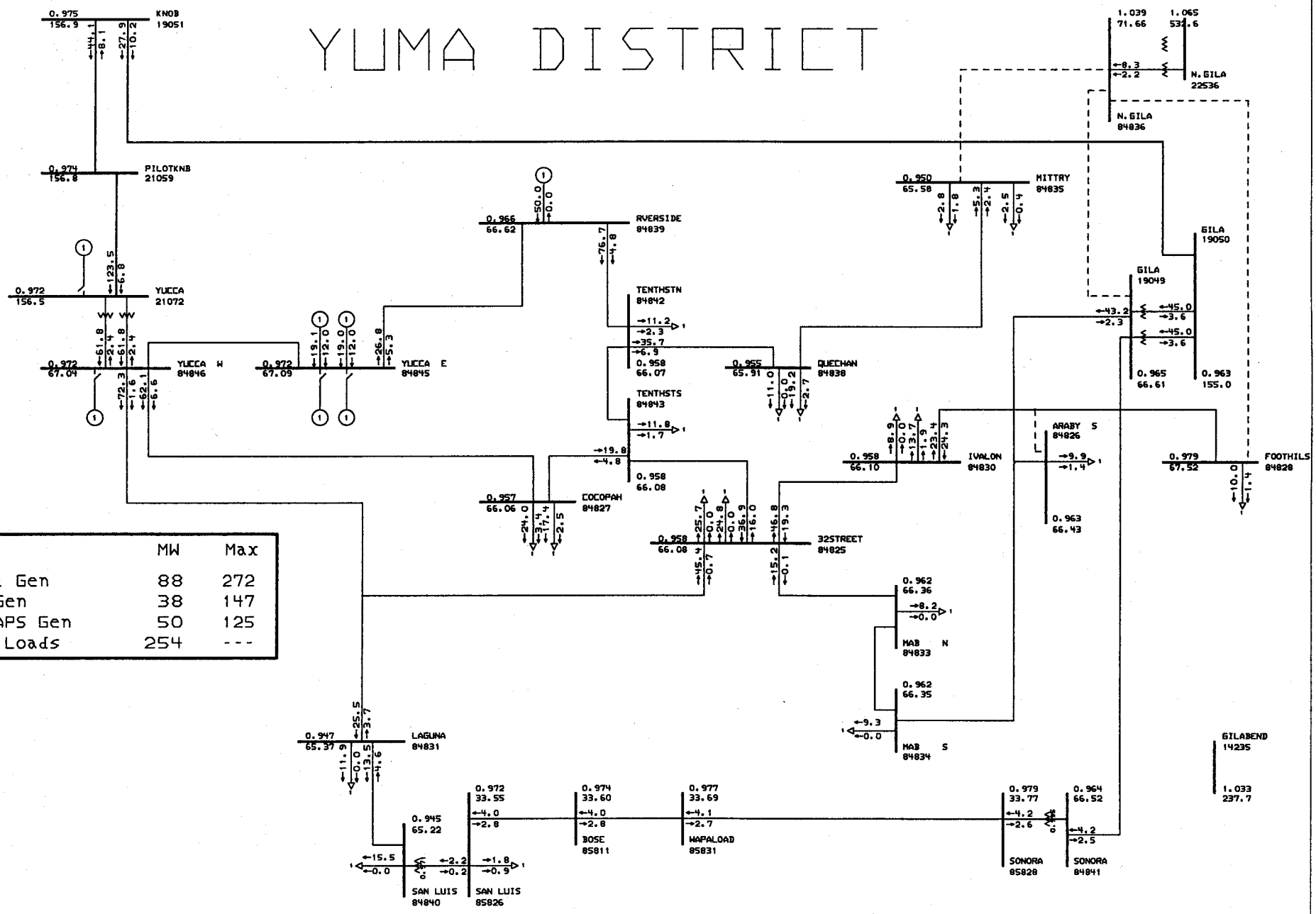

	MW	Max
Total Gen	88	272
APS Gen	38	147
Non-APS Gen	50	125
Yuma Loads	254	---

General Electric International, Inc. PSLF Program MW/MVAR Tue Dec 31 11:53:43 2002

APS

YUMA RMR STUDY //12-04-02
N.Gila XFMR outage
2003 Base Case//yuma03b //sm03#28

c:\upslf13\yuma1.drw
yuma03b.sav
Rating = 1

YUMA DISTRICT

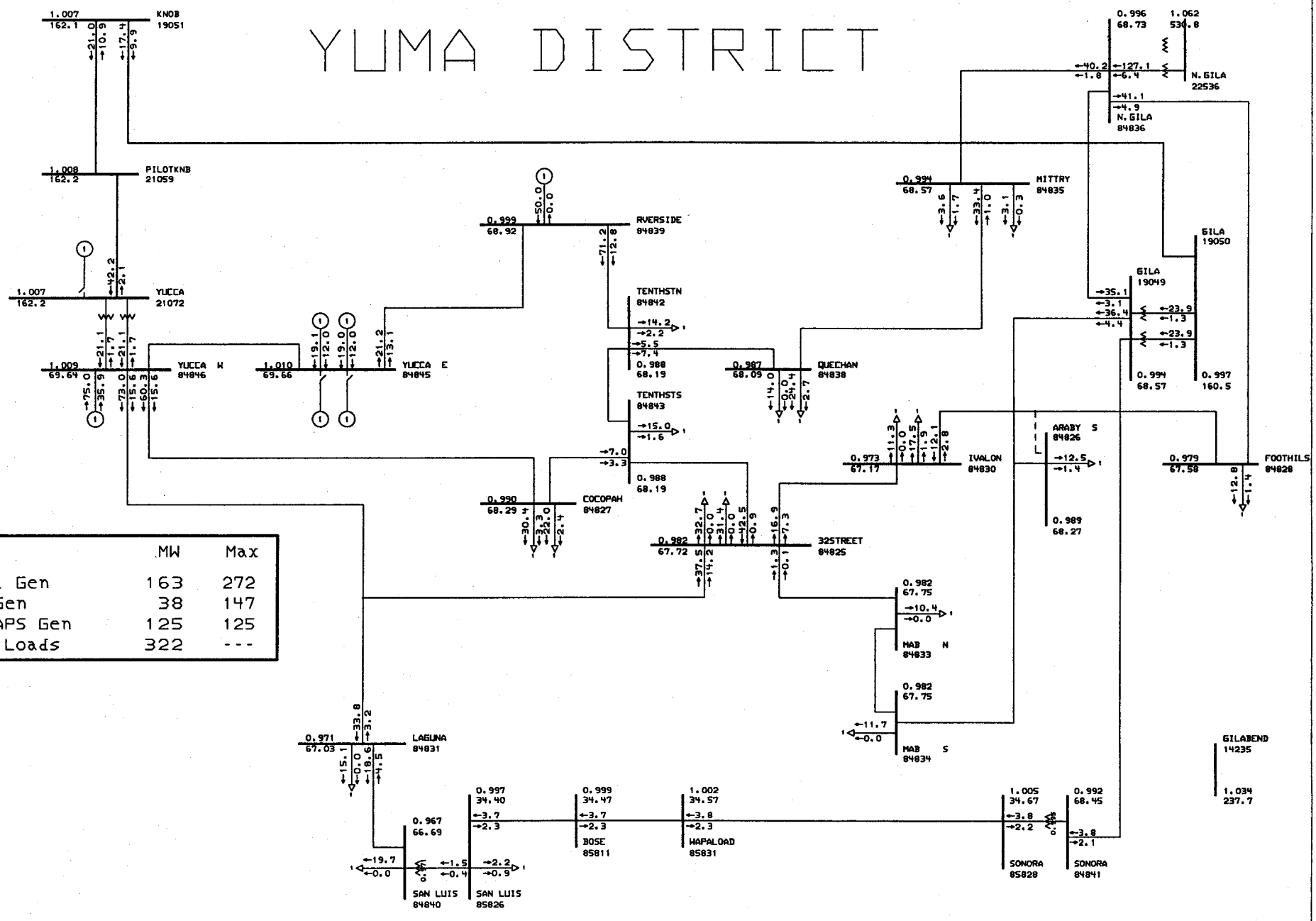

	MW	Max
Total Gen	163	272
APS Gen	38	147
Non-APS Gen	125	125
Yuma Loads	322	---

A125

General Electric International, Inc. PSLF Program MW/MVAR Tue Dec 31 11:54:15 2002

APS

YUMA RMR STUDY //12-04-02

2003 Base Case//yuma03c //sm03#28

c:\upslf13\yuma1.drw
c:\upslf13\yuma03c.sav
Rating = 1

YUMA DISTRICT

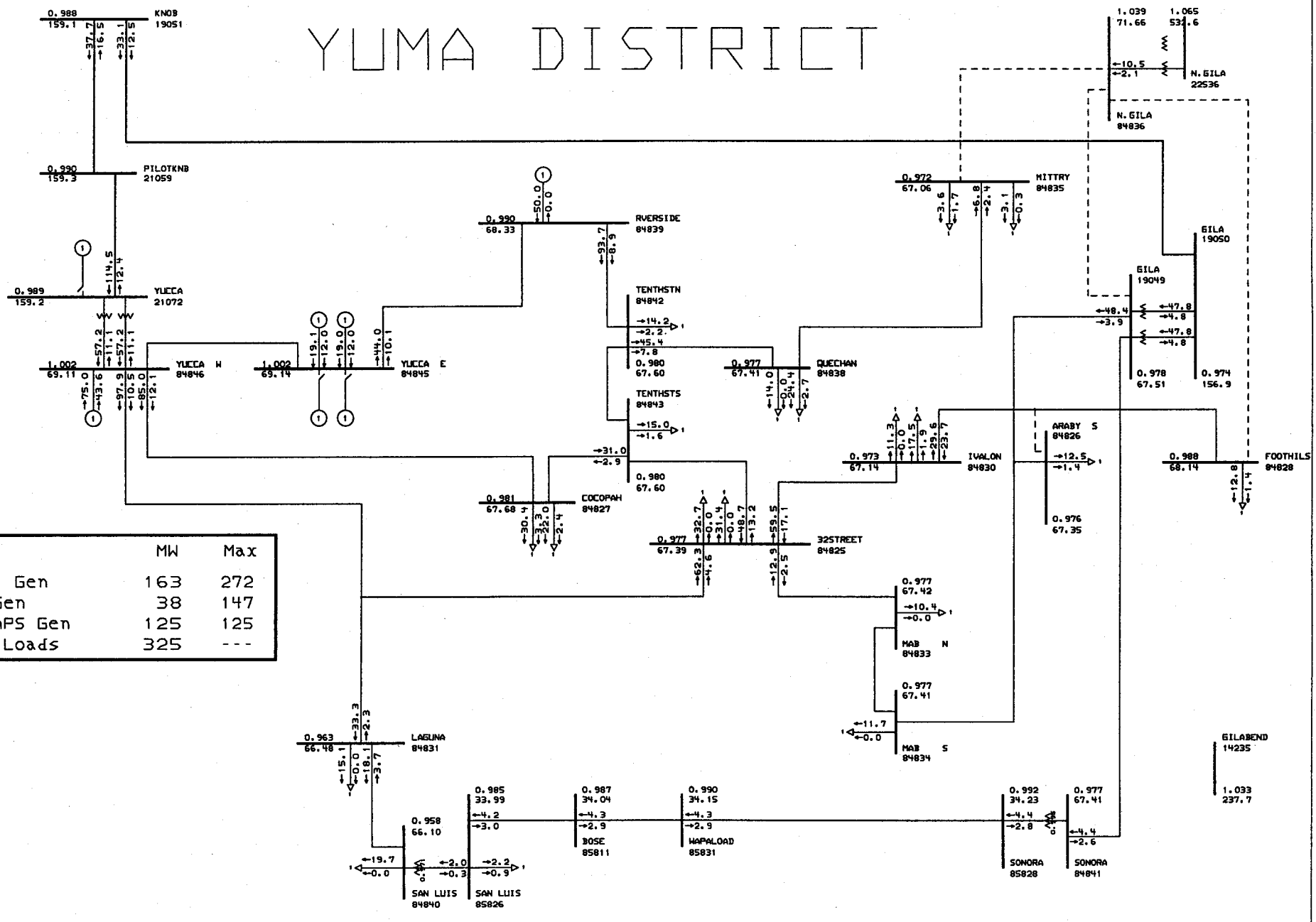

	MW	Max
Total Gen	163	272
APS Gen	38	147
Non-APS Gen	125	125
Yuma Loads	325	---

General Electric International, Inc. PSLF Program MW/MVAR Tue Dec 31 11:56:52 2002

APS

YUMA RMR STUDY //12-04-02
N.Gila XFMR outage
2003 Base Case//yuma03c //sm03#28

c:\upslf13\yuma1.drw
yuma03c.sav
Rating = 1

YUMA DISTRICT

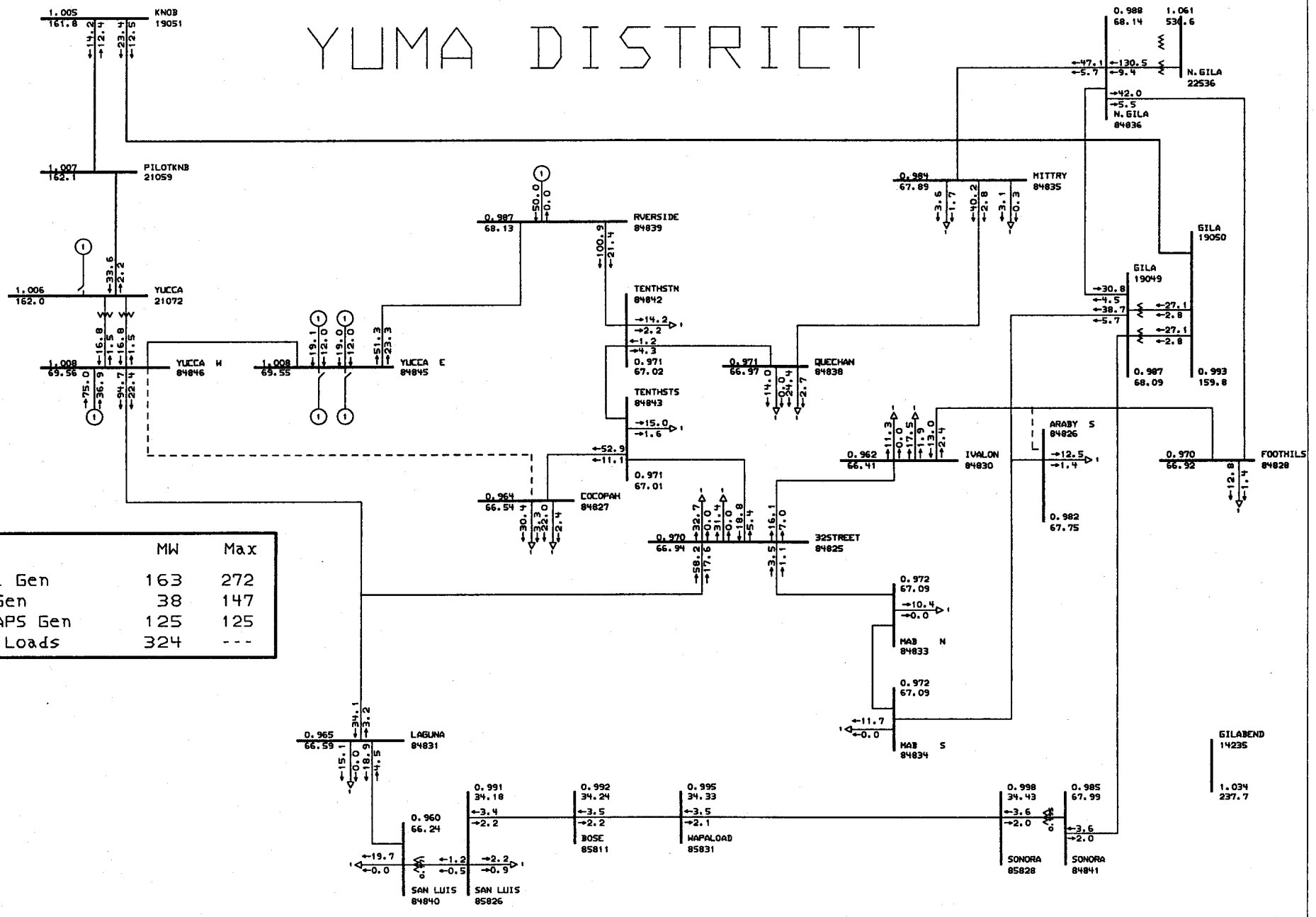

	MW	Max
Total Gen	163	272
APS Gen	38	147
Non-APS Gen	125	125
Yuma Loads	324	---

General Electric International, Inc. PSLF Program MW/MVAR Tue Dec 31 11:58:46 2002

APS

YUMA RMR STUDY //12-04-02
Yucca-Cocopah outage
2003 Base Case//yuma03c //sm03#28

c:\upslf13\yuma1.drw
yuma03c.sav
Rating = 1

YUMA DISTRICT

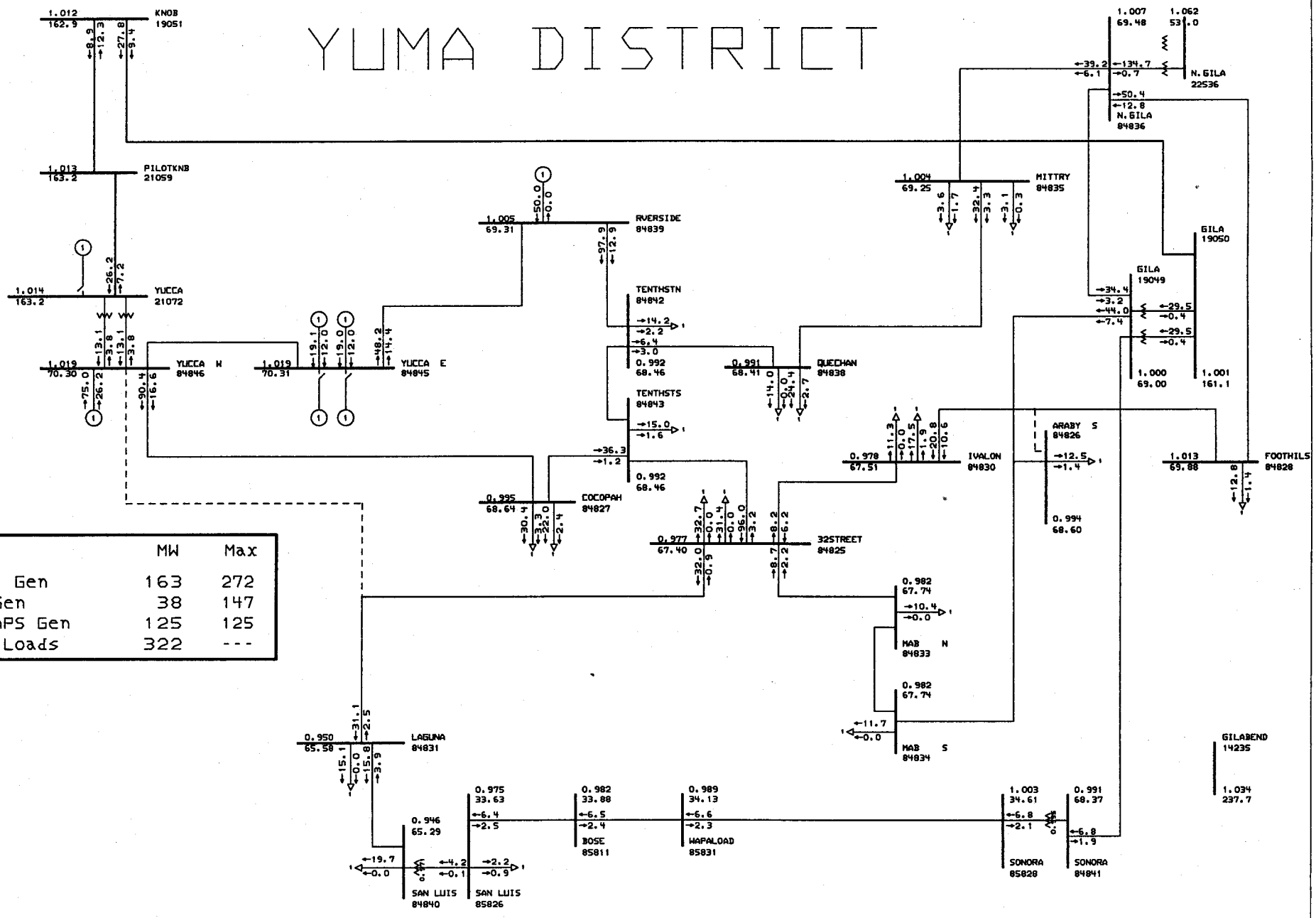

	MW	Max
Total Gen	163	272
APS Gen	38	147
Non-APS Gen	125	125
Yuma Loads	322	---

General Electric International, Inc. PSLF Program MW/MVAR Tue Dec 31 12:00:03 2002

APS

YUMA RMR STUDY //12-04-02
Yucca-Laguna tap outage
2003 Base Case//yuma03c //sm03#28

c:\upslf13\yuma1.drw
yuma03c.sav
Rating = 1

14 / 78

YUMA DISTRICT

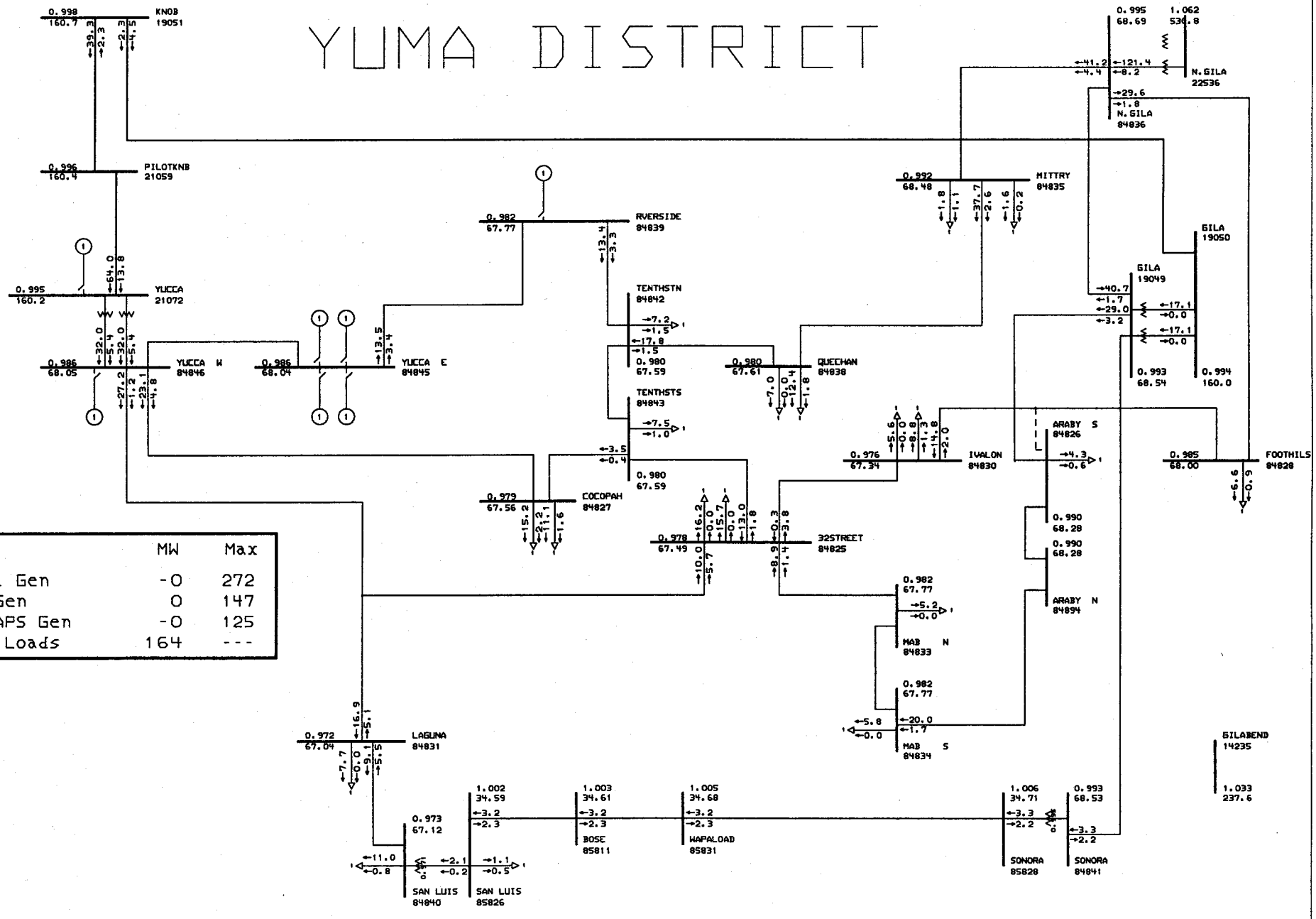

	MW	Max
Total Gen	-0	272
APS Gen	0	147
Non-APS Gen	-0	125
Yuma Loads	164	---

General Electric International, Inc. PSLF Program MW/MVAR Tue Dec 31 12:12:01 2002

APS

YUMA RMR STUDY //12/04/02

2004 Base Case//yuma04a //sm03#19/sm04#50

c:\upslf13\yuma1.drw
c:\upslf13\yuma04a.sav
Rating = 1

YUMA DISTRICT

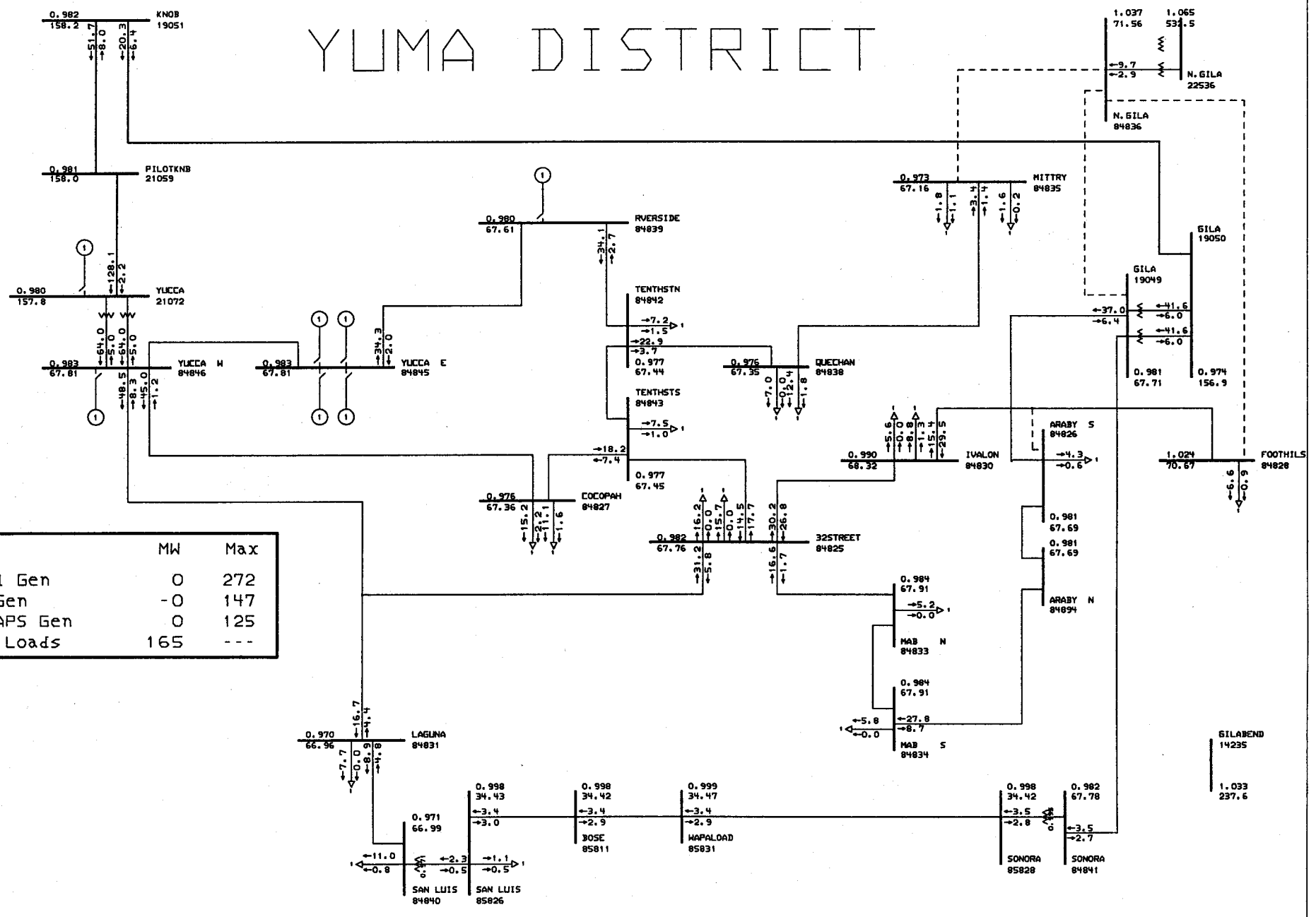

	MW	Max
Total Gen	0	272
APS Gen	-0	147
Non-APS Gen	0	125
Yuma Loads	165	---

A120

General Electric International, Inc. PSLF Program MW/MVAR Tue Dec 31 12:09:23 2002

APS

YUMA RMR STUDY //12/04/02
N.Gila XFMR outage
2004 Base Case//yuma04a //sm03#19/sm04#50

c:\upslf13\yuma1.drw
yuma04a.sav
Rating = 1

YUMA DISTRICT

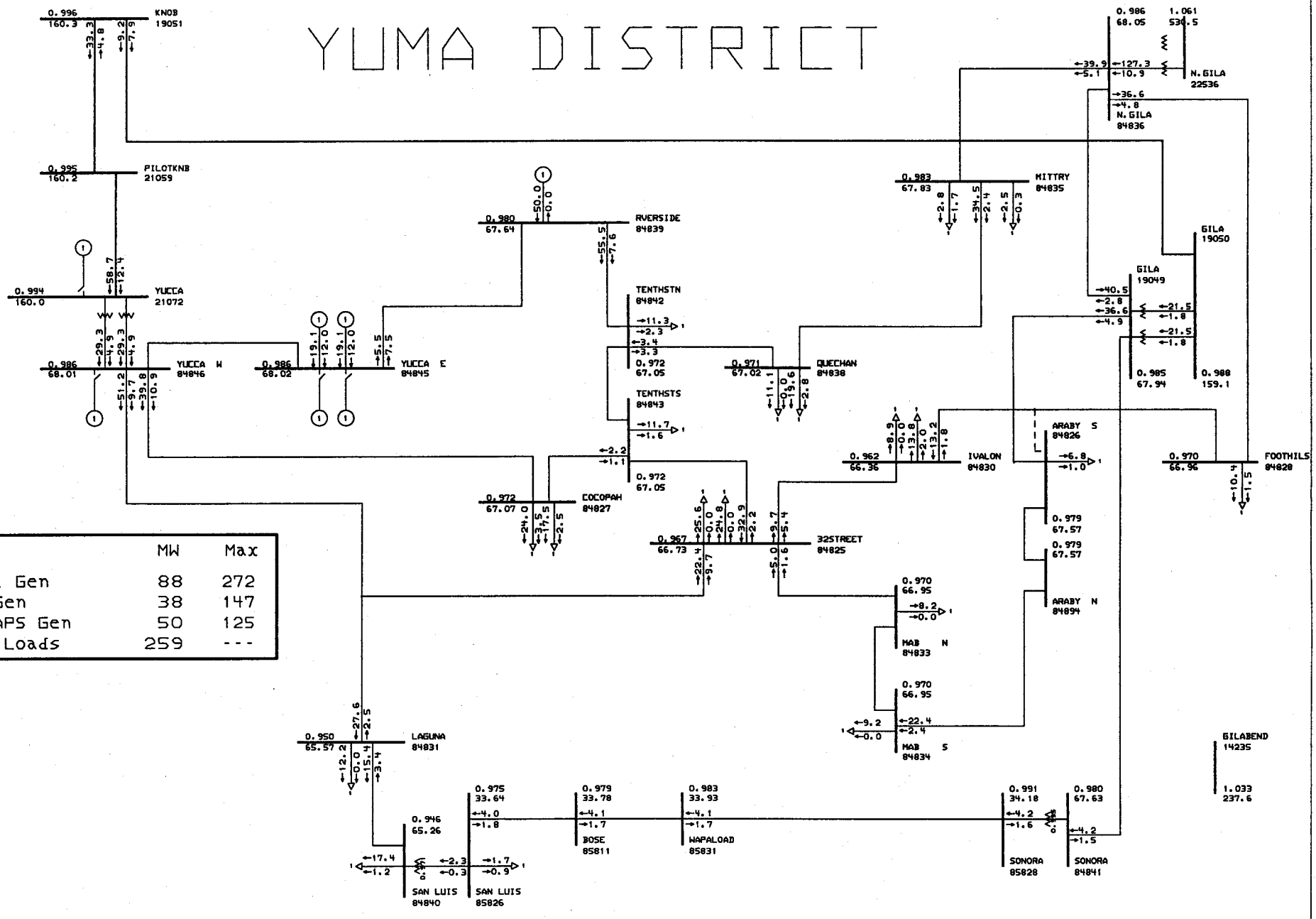

	MW	Max
Total Gen	88	272
APS Gen	38	147
Non-APS Gen	50	125
Yuma Loads	259	---

General Electric International, Inc. PSLF Program MW/MVAR Tue Dec 31 12:12:20 2002

APS

YUMA RMR STUDY //12/04/02

2004 Base Case//yuma04b //sm03#19/sm04#50

c:\upslf13\yuma1.drw
c:\upslf13\yuma04b.sav
Rating = 1

YUMA DISTRICT

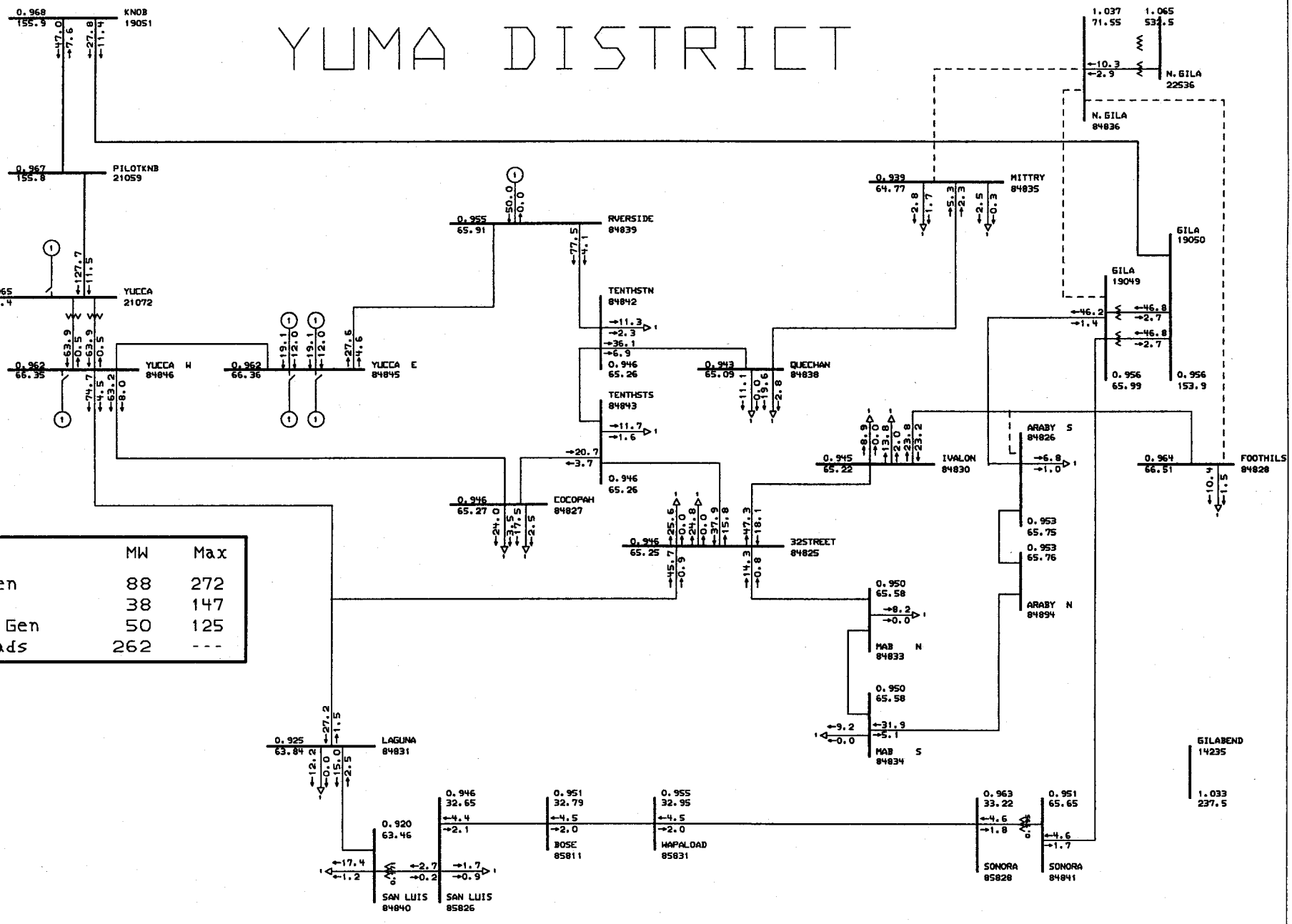

	MW	Max
Total Gen	88	272
APS Gen	38	147
Non-APS Gen	50	125
Yuma Loads	262	---

A.27

General Electric International, Inc. PSLF Program MW/MVAR Tue Dec 31 12:11:38 2002

APS

YUMA RMR STUDY //12/04/02
N.Gila XFMR outage
2004 Base Case//yuma04b //sm03#19/sm04#50

c:\upslf13\yuma1.drw
yuma04b.sav
Rating = 1

YUMA DISTRICT

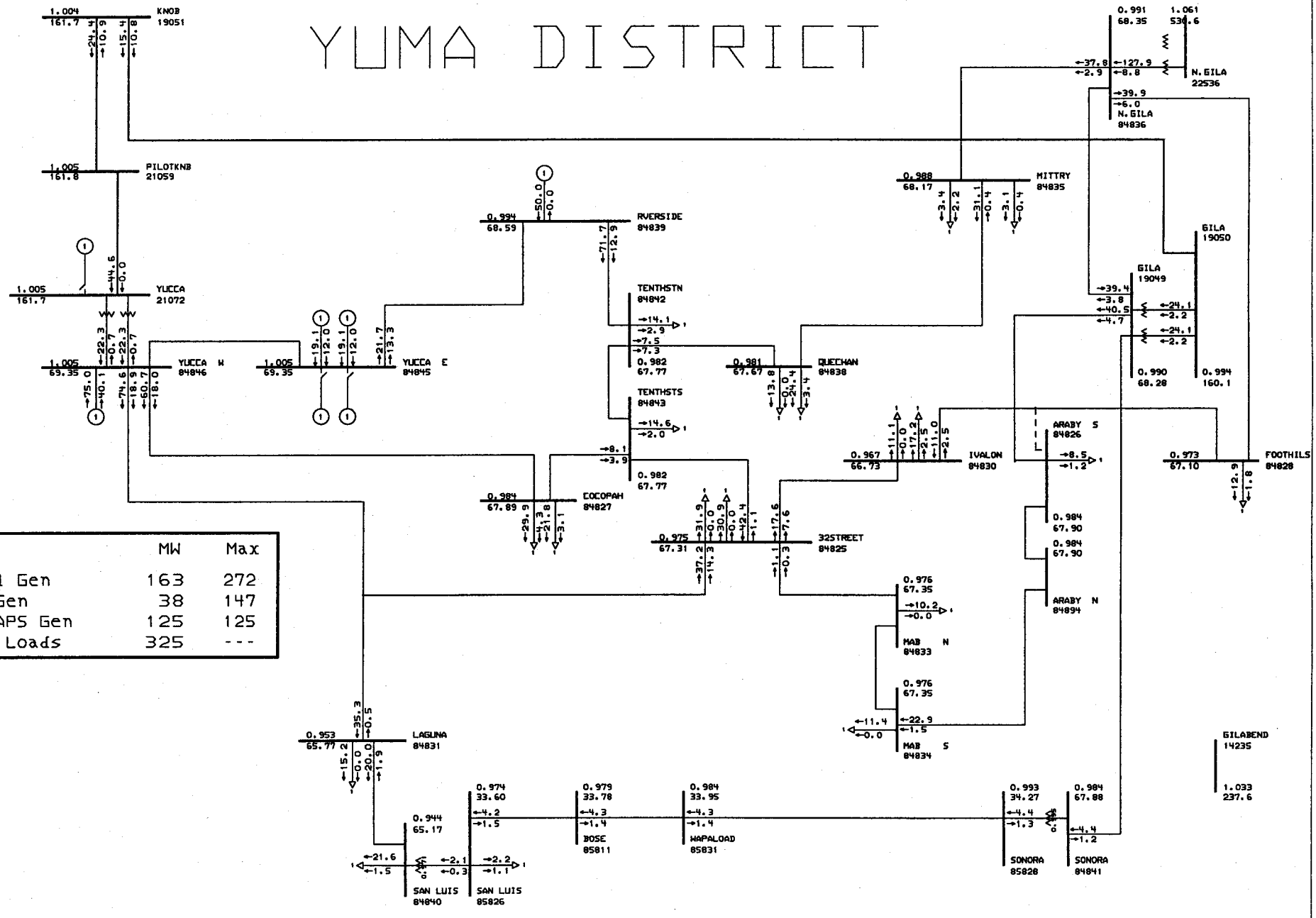

	MW	Max
Total Gen	163	272
APS Gen	38	147
Non-APS Gen	125	125
Yuma Loads	325	---

General Electric International, Inc. PSLF Program MW/MVAR Tue Dec 31 12:13:53 2002

APS

YUMA RMR STUDY //12/04/02

2004 Base Case//yuma04c //sm03#19/sm04#50

c:\upslf13\yuma1.drw
c:\upslf13\yuma04c.sav
Rating = 1

YUMA DISTRICT

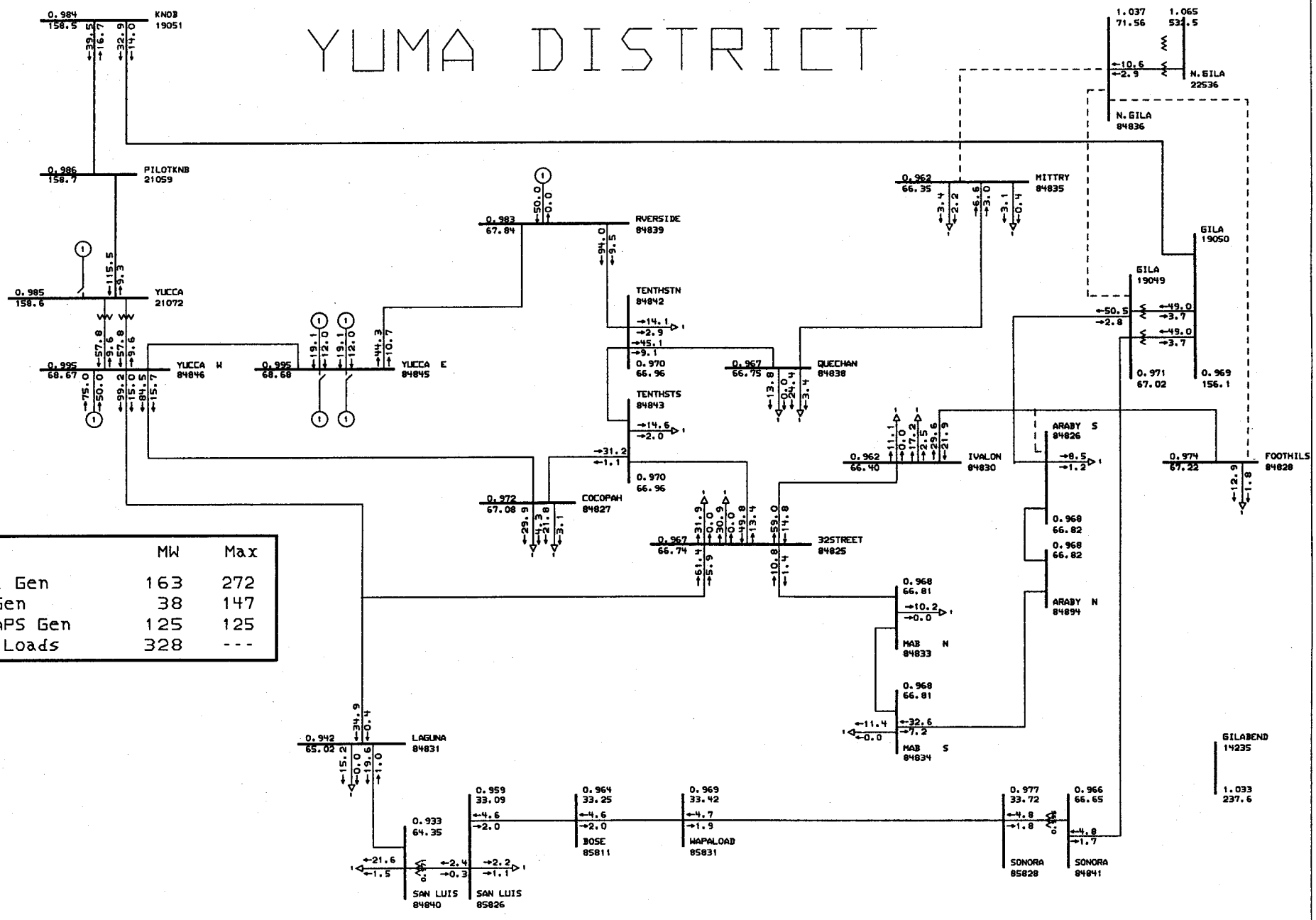

	MW	Max
Total Gen	163	272
APS Gen	38	147
Non-APS Gen	125	125
Yuma Loads	328	---

General Electric International, Inc. PSLF Program MW/MVAR Tue Dec 31 12:15:35 2002

APS

YUMA RMR STUDY //12/04/02
N.Gila XFMR outage
2004 Base Case//yuma04c //sm03#19/sm04#50

c:\upslf13\yuma1.drw
yuma04c.sav
Rating = 1

YUMA DISTRICT

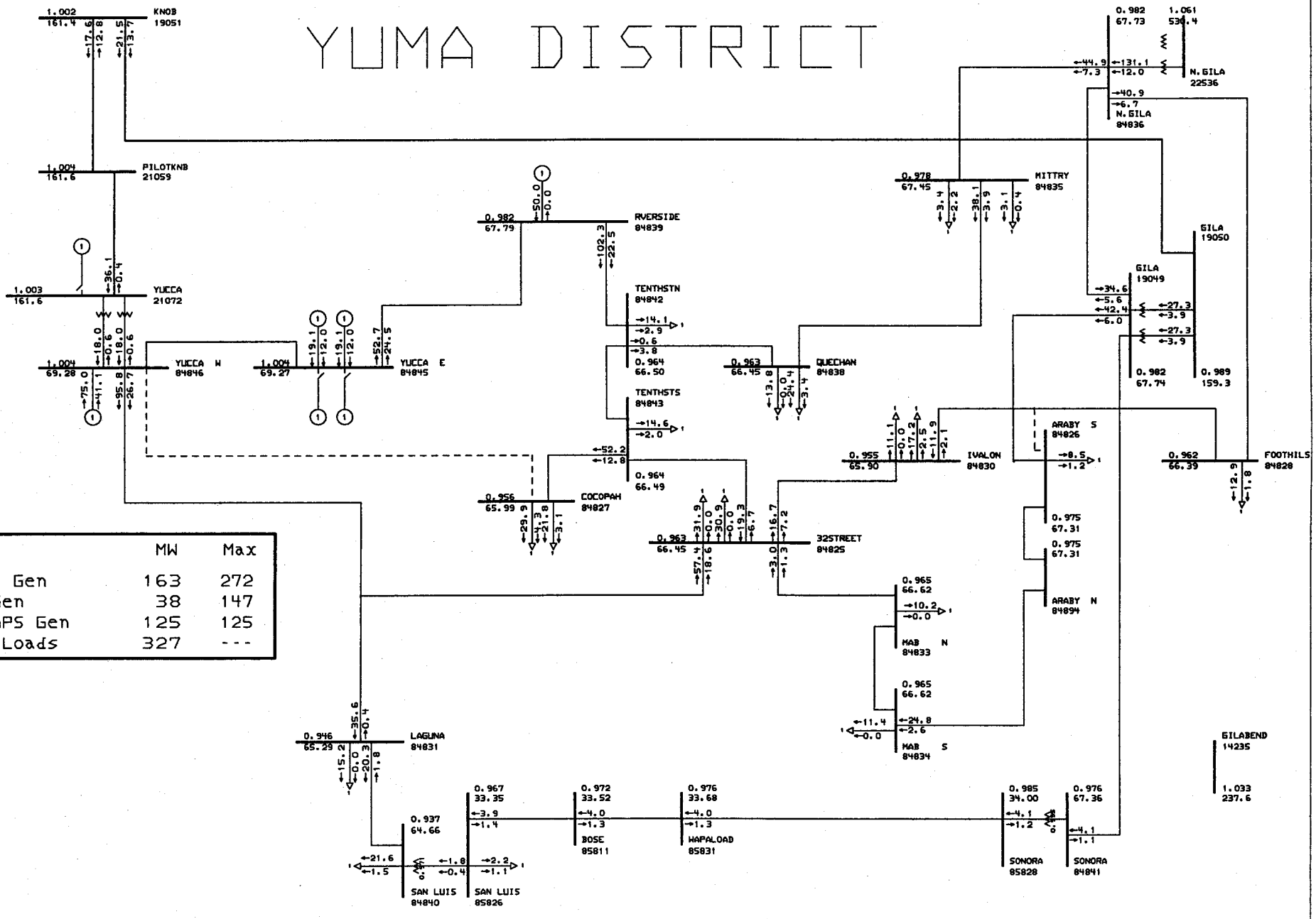

	MW	Max
Total Gen	163	272
APS Gen	38	147
Non-APS Gen	125	125
Yuma Loads	327	---

A135

General Electric International, Inc. PSLF Program MW/MVAR Tue Dec 31 12:16:44 2002

APS

YUMA RMR STUDY //12/04/02
Yucca-Cocopah outage
2004 Base Case//yuma04c //sm03#19/sm04#50

c:\upslf13\yuma1.drw
yuma04c.sav
Rating = 1

YUMA DISTRICT

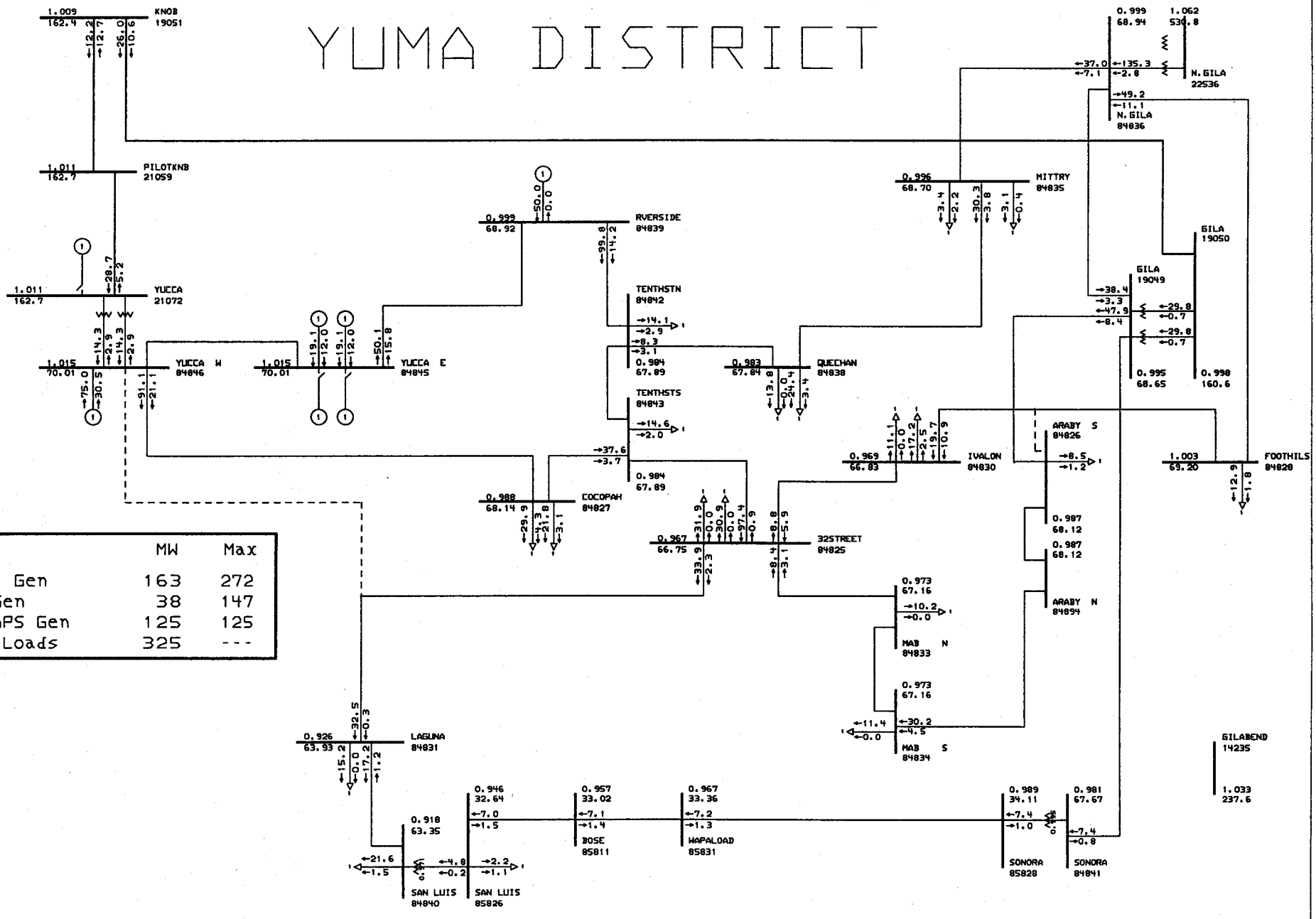

	MW	Max
Total Gen	163	272
APS Gen	38	147
Non-APS Gen	125	125
Yuma Loads	325	---

General Electric International, Inc. PSLF Program MW/MVAR Tue Dec 31 12:17:57 2002

APS

YUMA RMR STUDY //12/04/02
Yucca-Laguna tap outage
2004 Base Case//yuma04c //sm03#19/sm04#50

c:\upslf13\yuma1.drw
yuma04c.sav
Rating = 1

4137

YUMA DISTRICT

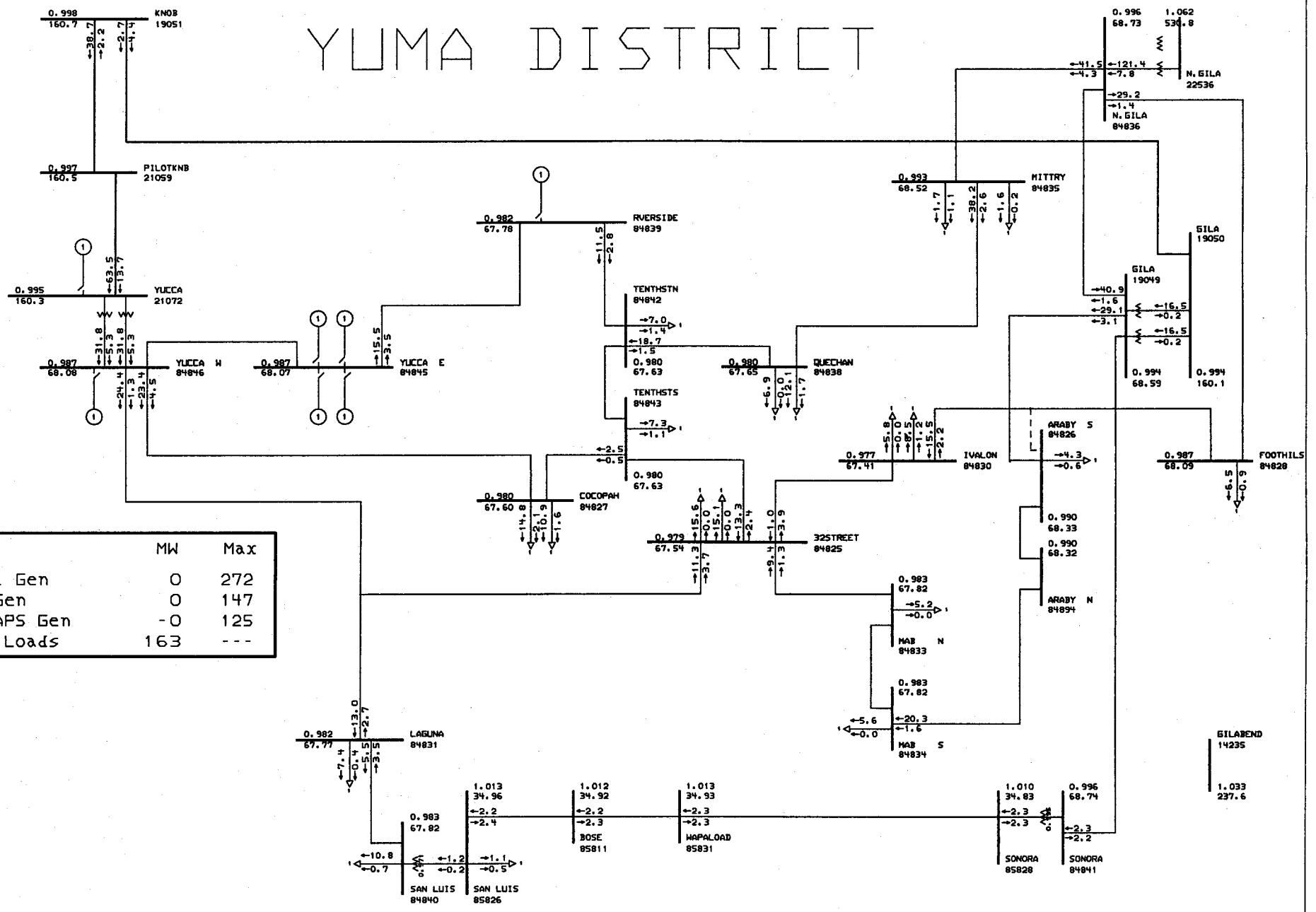

	MW	Max
Total Gen	0	272
APS Gen	0	147
Non-APS Gen	-0	125
Yuma Loads	163	---

General Electric International, Inc. PSLF Program MW/MVAR Tue Dec 31 12:25:25 2002

APS

YUMA RMR STUDY //12-05-02

2005 Base Case//yuma05a //sm04+15 & sm05+56

c:\upslf13\yuma1.drw
c:\upslf13\yuma05a.sav
Rating = 1

YUMA DISTRICT

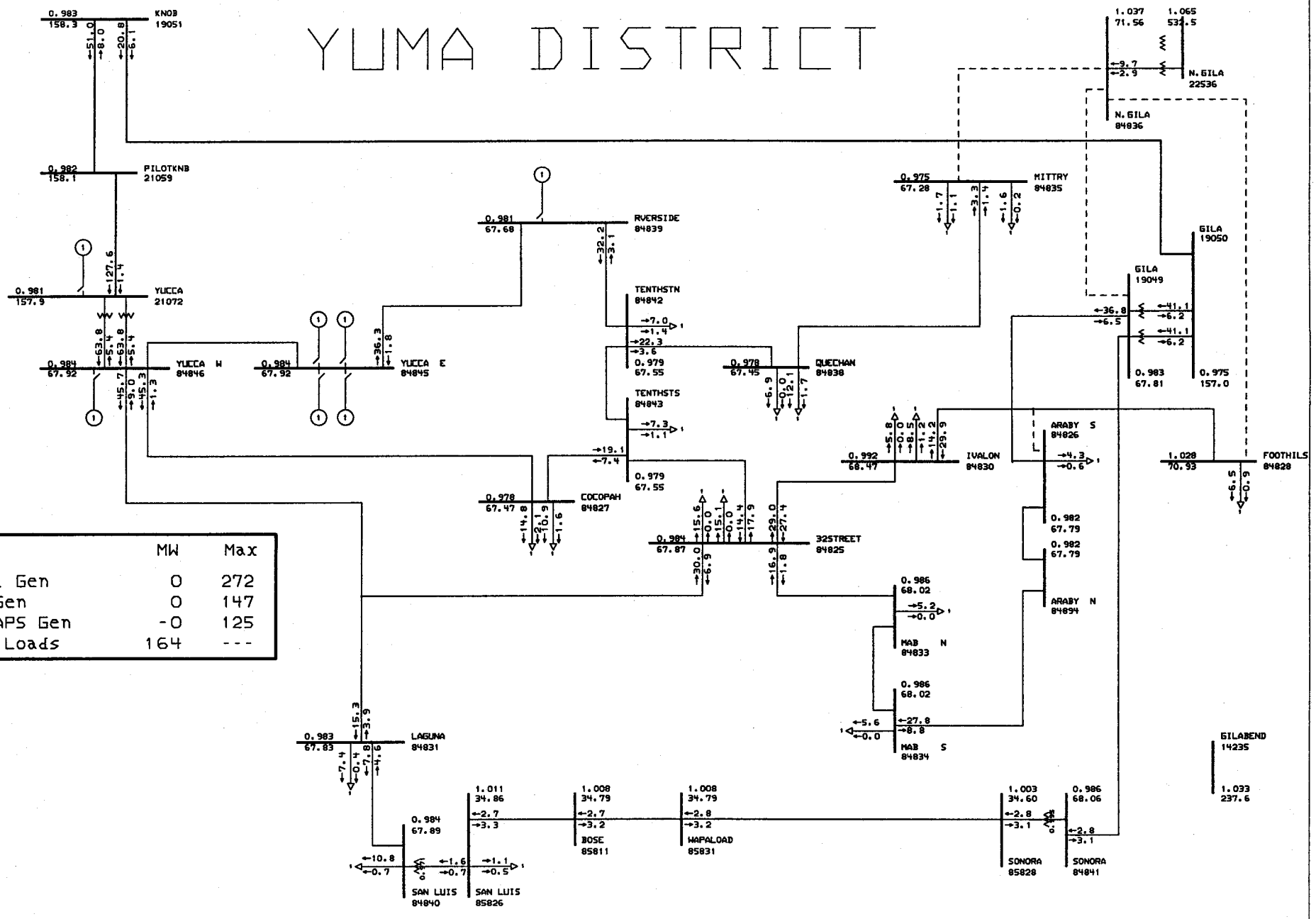

	MW	Max
Total Gen	0	272
APS Gen	0	147
Non-APS Gen	-0	125
Yuma Loads	164	---

General Electric International, Inc. PSLF Program MW/MVAR Tue Dec 31 12:28:41 2002

APS

YUMA RMR STUDY //12-05-02
N.Gila XFMR outage
2005 Base Case//yuma05a //sm04#15 & sm05#56

c:\upslf13\yuma1.drw
yuma05a.sav
Rating = 1

YUMA DISTRICT

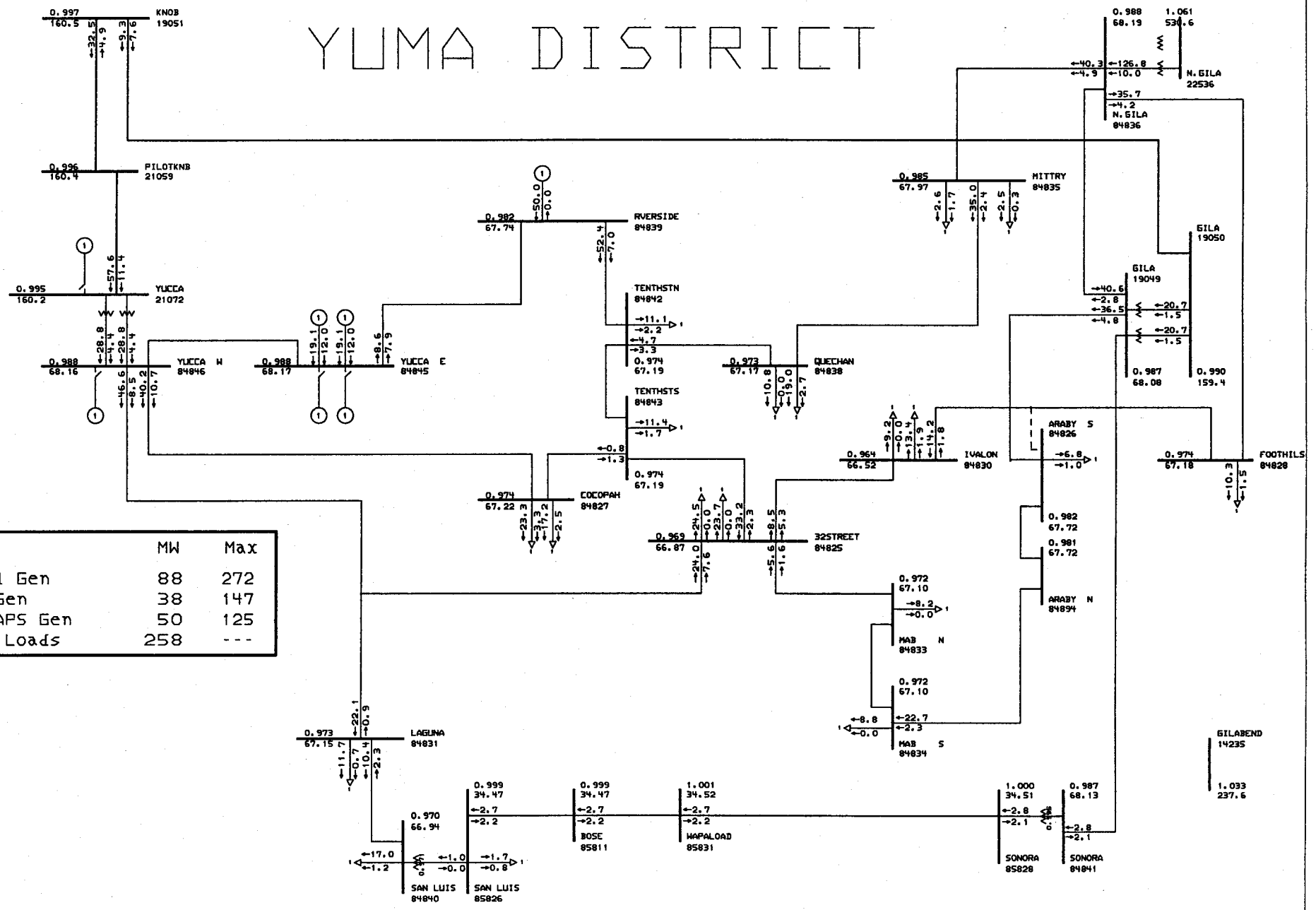

	MW	Max
Total Gen	88	272
APS Gen	38	147
Non-APS Gen	50	125
Yuma Loads	258	---

General Electric International, Inc. PSLF Program MW/MVAR Tue Dec 31 12:39:25 2002

APS

YUMA RMR STUDY //12-05-02

2005 Base Case//yuma05b //sm04#15 & sm05#56

c:\upslf13\yuma1.drw
c:\upslf13\yuma05b.sav
Rating = 1

14.20

YUMA DISTRICT

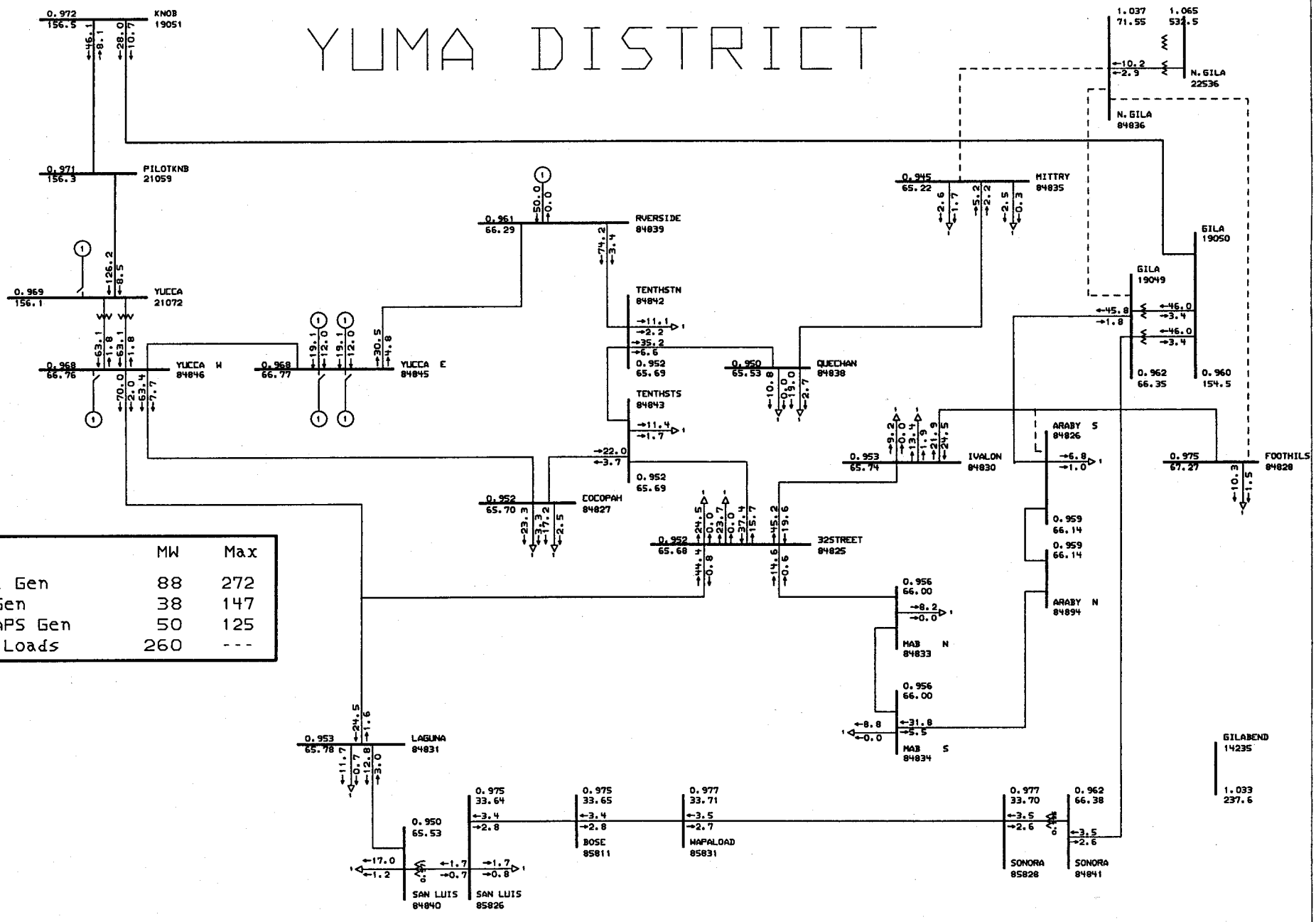

	MW	Max
Total Gen	88	272
APS Gen	38	147
Non-APS Gen	50	125
Yuma Loads	260	---

General Electric International, Inc. PSLF Program MW/MVAR Tue Dec 31 12:41:17 2002

APS

YUMA RMR STUDY //12-05-02
N.Gila XFMR outage
2005 Base Case//yuma05b //sm04#15 & sm05#56

c:\upslf13\yuma1.drw
yuma05b.sav
Rating = 1

A 115

YUMA DISTRICT

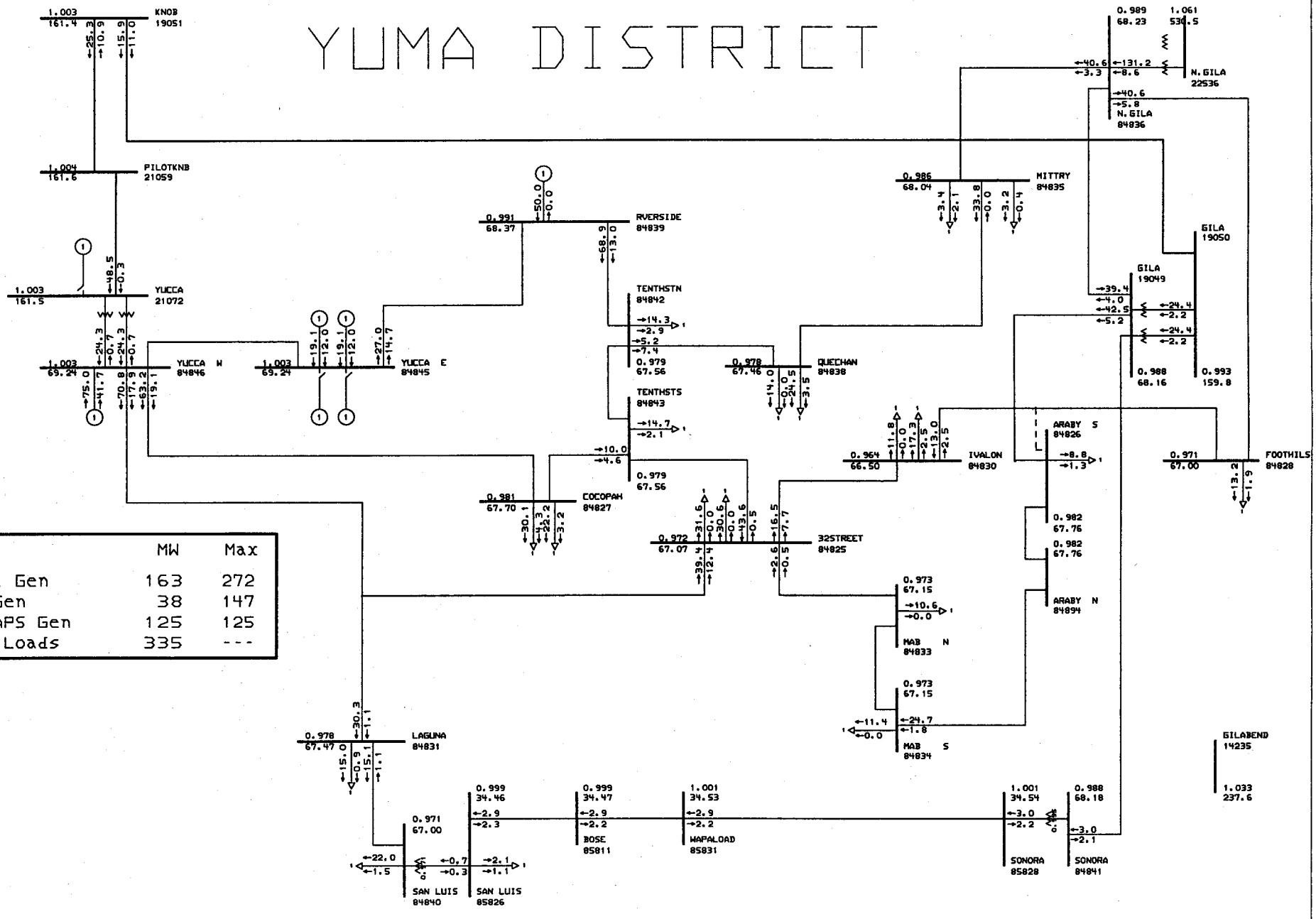

	MW	Max
Total Gen	163	272
APS Gen	38	147
Non-APS Gen	125	125
Yuma Loads	335	---

General Electric International, Inc. PSLF Program MW/MVAR Tue Dec 31 12:41:59 2002

APS

YUMA RMR STUDY //12-05-02

2005 Base Case//yuma05c //sm04#15 & sm05#56

c:\upslf13\yuma1.drw
c:\upslf13\yuma05c.sav
Rating = 1

YUMA DISTRICT

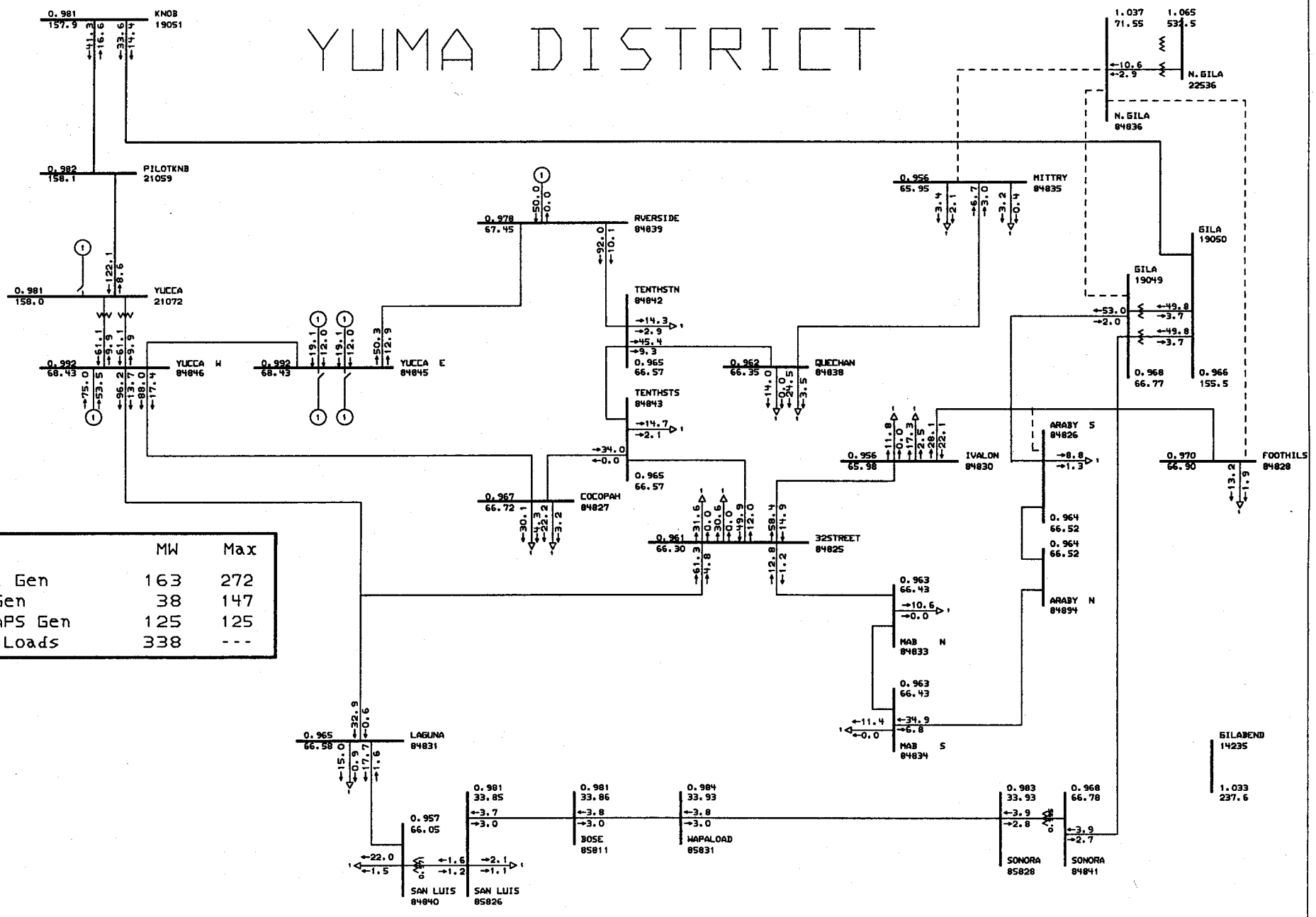

	MW	Max
Total Gen	163	272
APS Gen	38	147
Non-APS Gen	125	125
Yuma Loads	338	---

General Electric International, Inc. PSLF Program MW/MVAR Tue Dec 31 12:44:18 2002

APS

YUMA RMR STUDY //12-05-02
N.Gila XFMR outage
2005 Base Case//yuma05c //sm04#15 & sm05#56

c:\upslf13\yuma1.drw
yuma05c.sav
Rating = 1

M142

YUMA DISTRICT

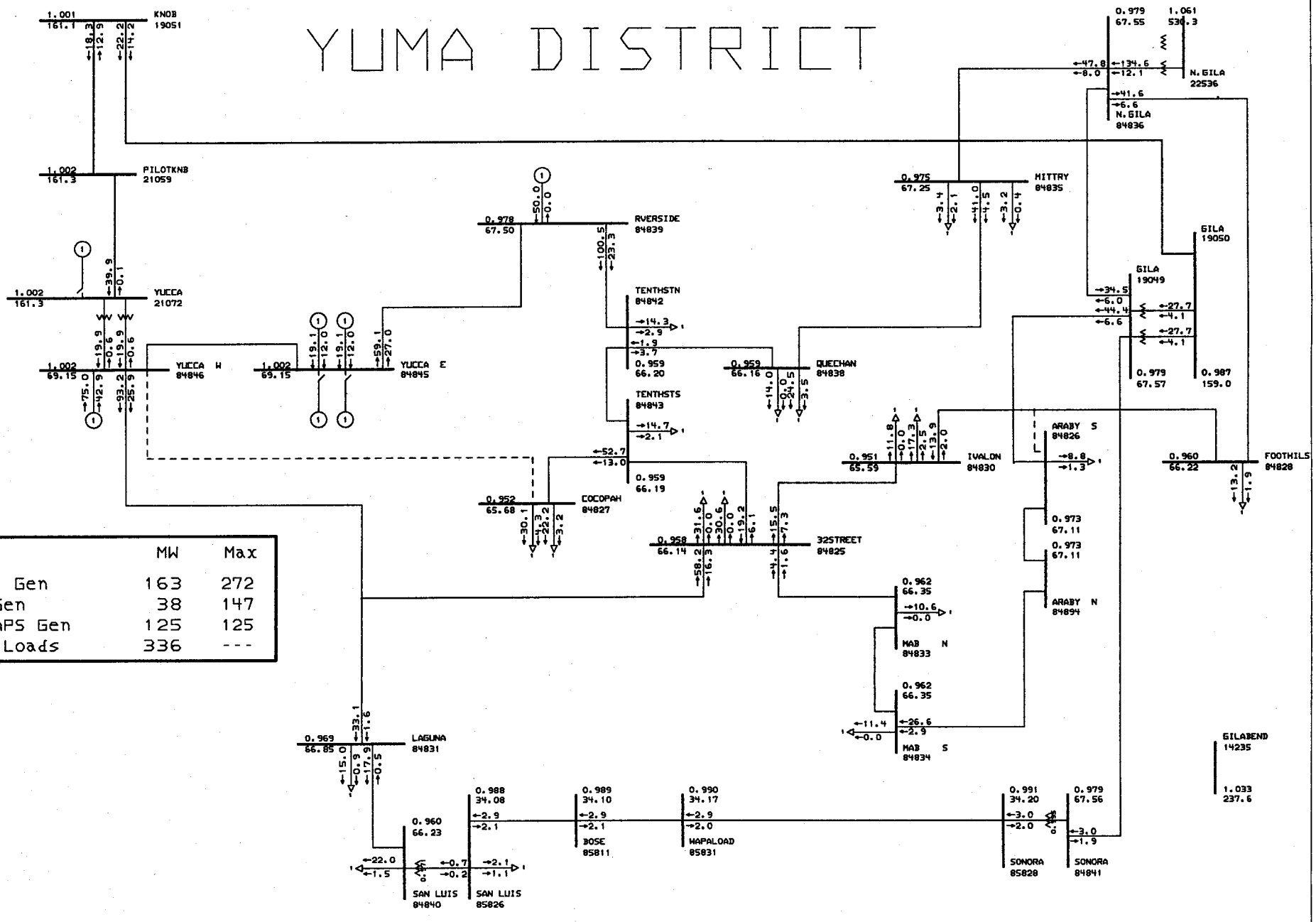

	MW	Max
Total Gen	163	272
APS Gen	38	147
Non-APS Gen	125	125
Yuma Loads	336	---

General Electric International, Inc. PSLF Program MW/MVAR Tue Dec 31 12:45:30 2002

APS

YUMA RMR STUDY //12-05-02
Yucca-Cocopah outage
2005 Base Case//yuma05c //sm04#15 & sm05#56

c:\ups1f13\yuma1.drw
yuma05c.sav
Rating = 1

YUMA DISTRICT

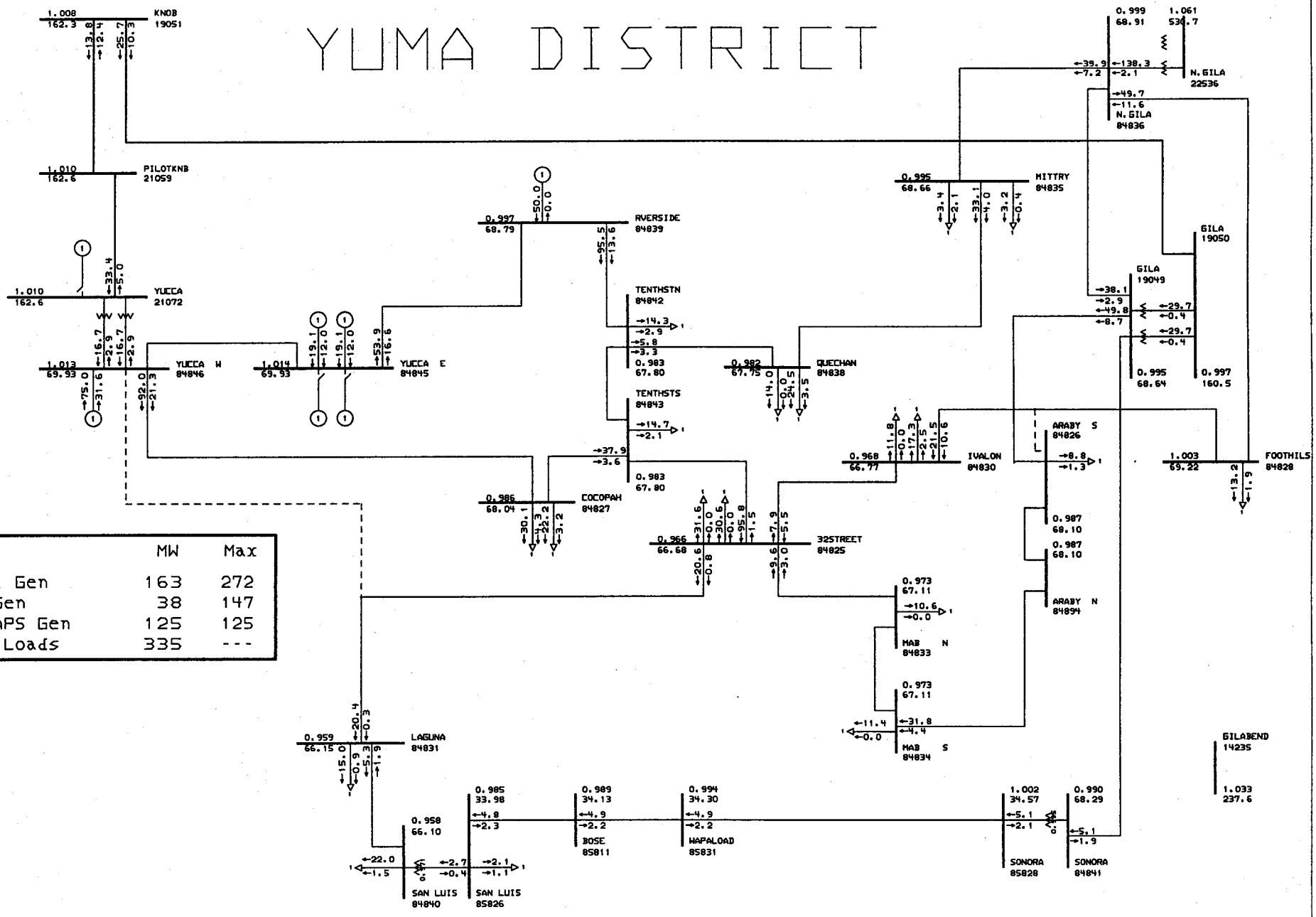

	MW	Max
Total Gen	163	272
APS Gen	38	147
Non-APS Gen	125	125
Yuma Loads	335	---

General Electric International, Inc. PSLF Program MW/MVAR Tue Dec 31 12:47:15 2002

APS

YUMA RMR STUDY //12-05-02
Yucca-Laguna tap outage
2005 Base Case//yuma05c //sm04#15 & sm05#56

c:\upslf13\yuma1.drw
yuma05c.sav
Rating = 1

YUMA DISTRICT

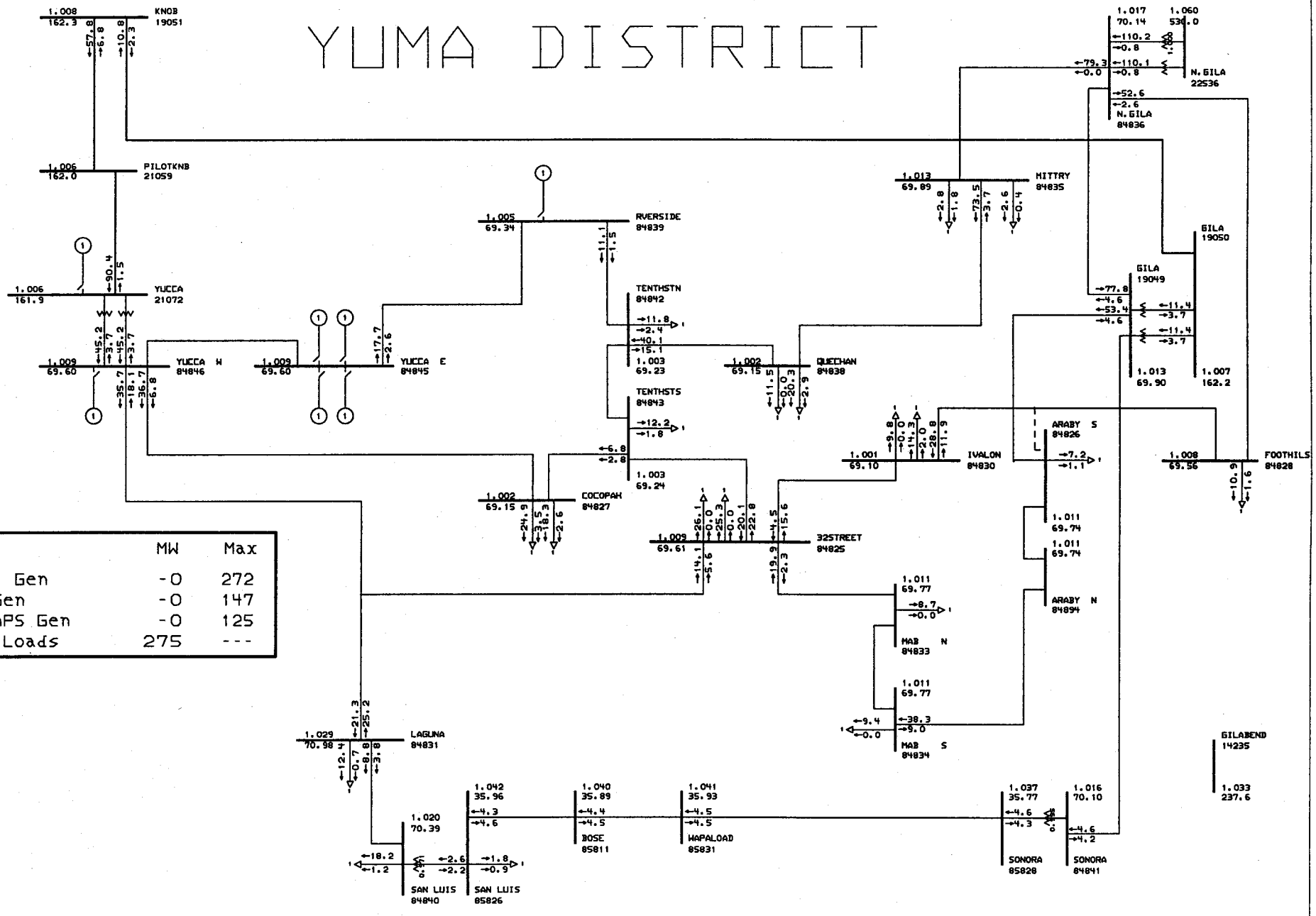

	MW	Max
Total Gen	-0	272
APS Gen	-0	147
Non-APS Gen	-0	125
Yuma Loads	275	---

General Electric International, Inc. PSLF Program MW/MVAR Tue Dec 31 12:49:48 2002

APS

YUMA RMR STUDY //12-05-02

2005 Base Case//yuma05a1 //sm04#15 & sm05#56

c:\upslf13\yuma1.drw
c:\upslf13\yuma05a1.sav
Rating = 1

YUMA DISTRICT

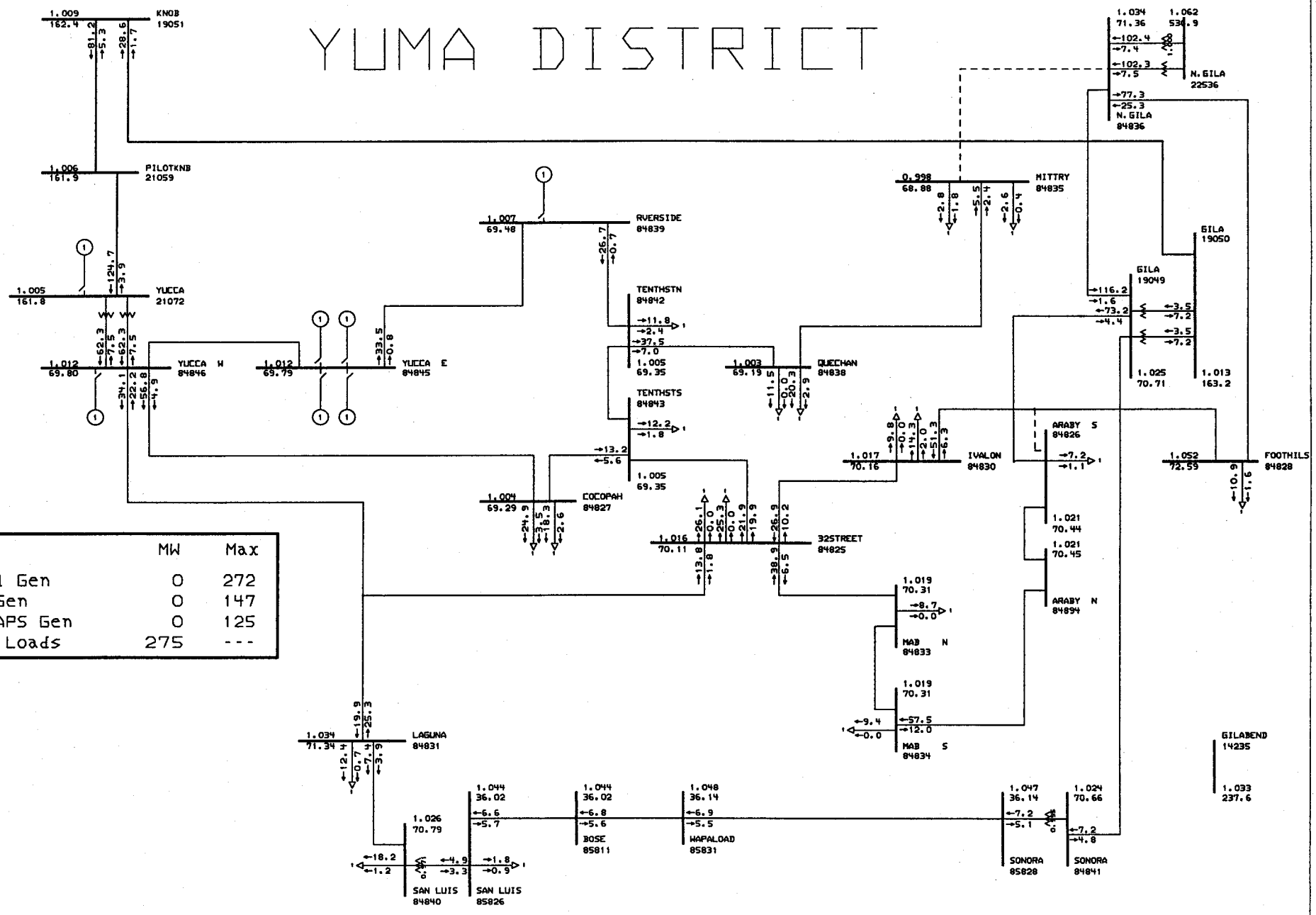

	MW	Max
Total Gen	0	272
APS Gen	0	147
Non-APS Gen	0	125
Yuma Loads	275	---

General Electric International, Inc. PSLF Program MW/MVAR Tue Dec 31 12:51:22 2002

APS

YUMA RMR STUDY //12-05-02
N.Gila-Mittry outage
2005 Base Case//yuma05a1 //sm04*15 & sm05*56

c:\upslf13\yuma1.drw
yuma05a1.sav
Rating = 1

YUMA DISTRICT

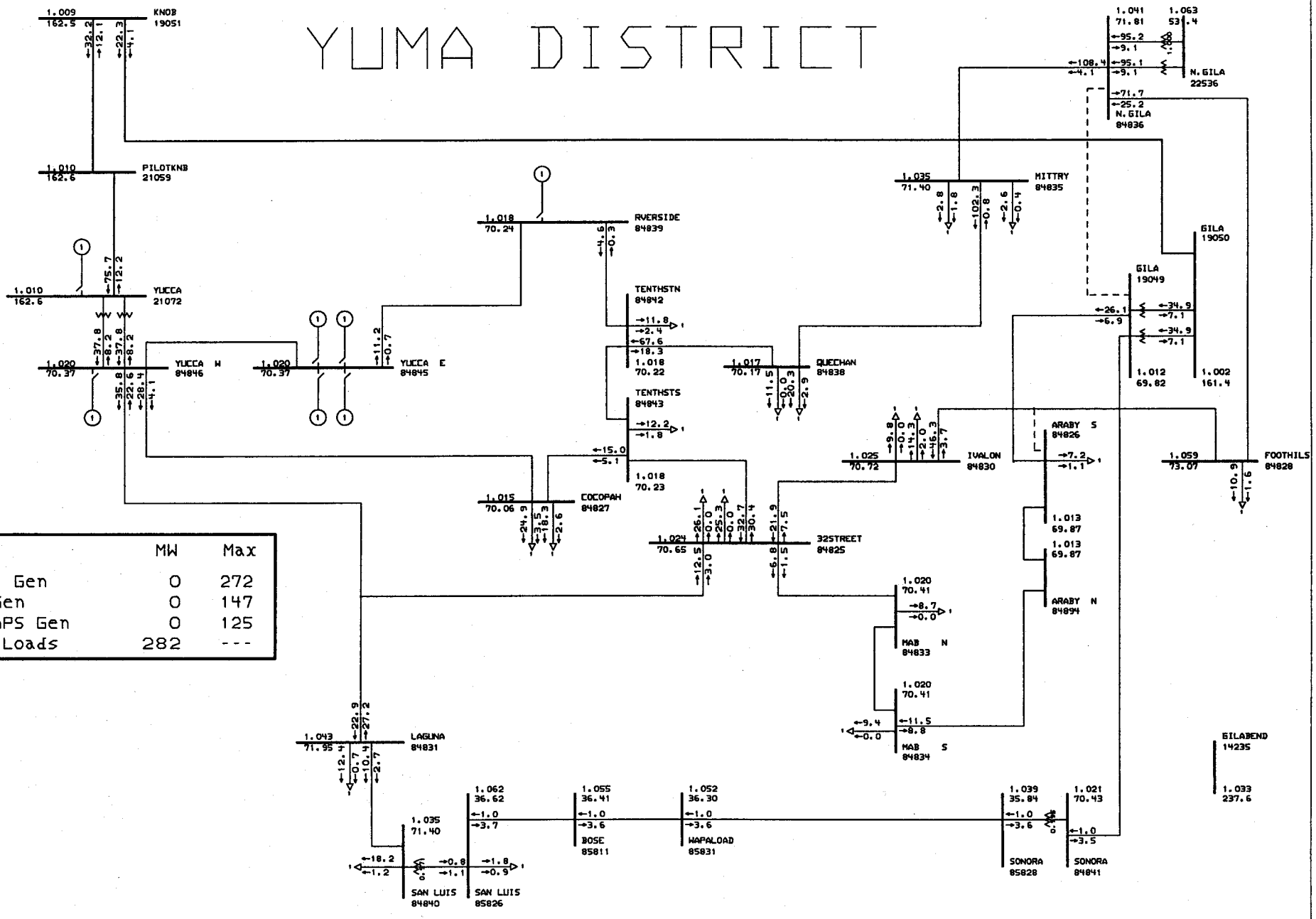

	MW	Max
Total Gen	0	272
APS Gen	0	147
Non-APS Gen	0	125
Yuma Loads	282	---

General Electric International, Inc. PSLF Program MW/MVAR Tue Dec 31 12:53:01 2002

APS

YUMA RMR STUDY //12-05-02
N.Gila-Gila outage
2005 Base Case//yuma05a1 //sm04#15 & sm05#56

c:\upslf13\yuma1.drw
yuma05a1.sav
Rating = 1

YUMA DISTRICT

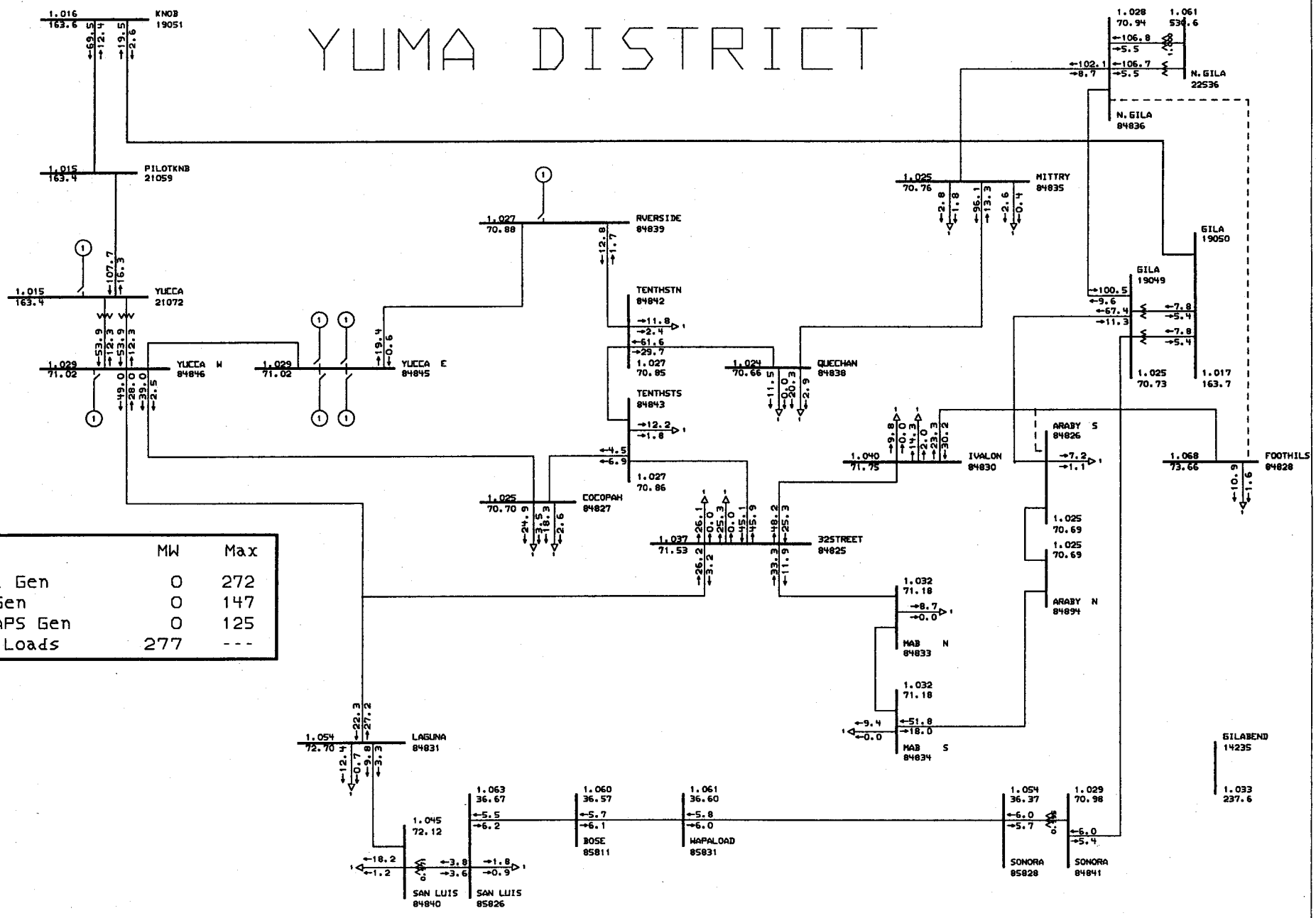

	MW	Max
Total Gen	0	272
APS Gen	0	147
Non-APS Gen	0	125
Yuma Loads	277	---

General Electric International, Inc. PSLF Program MW/MVAR Tue Dec 31 12:54:30 2002

APS

YUMA RMR STUDY //12-05-02
N.Gila-Foothills outage
2005 Base Case//yuma05a1 //sm04#15 & sm05#56

c:\upslf13\yuma1.drw
yuma05a1.sav
Rating = 1

YUMA DISTRICT

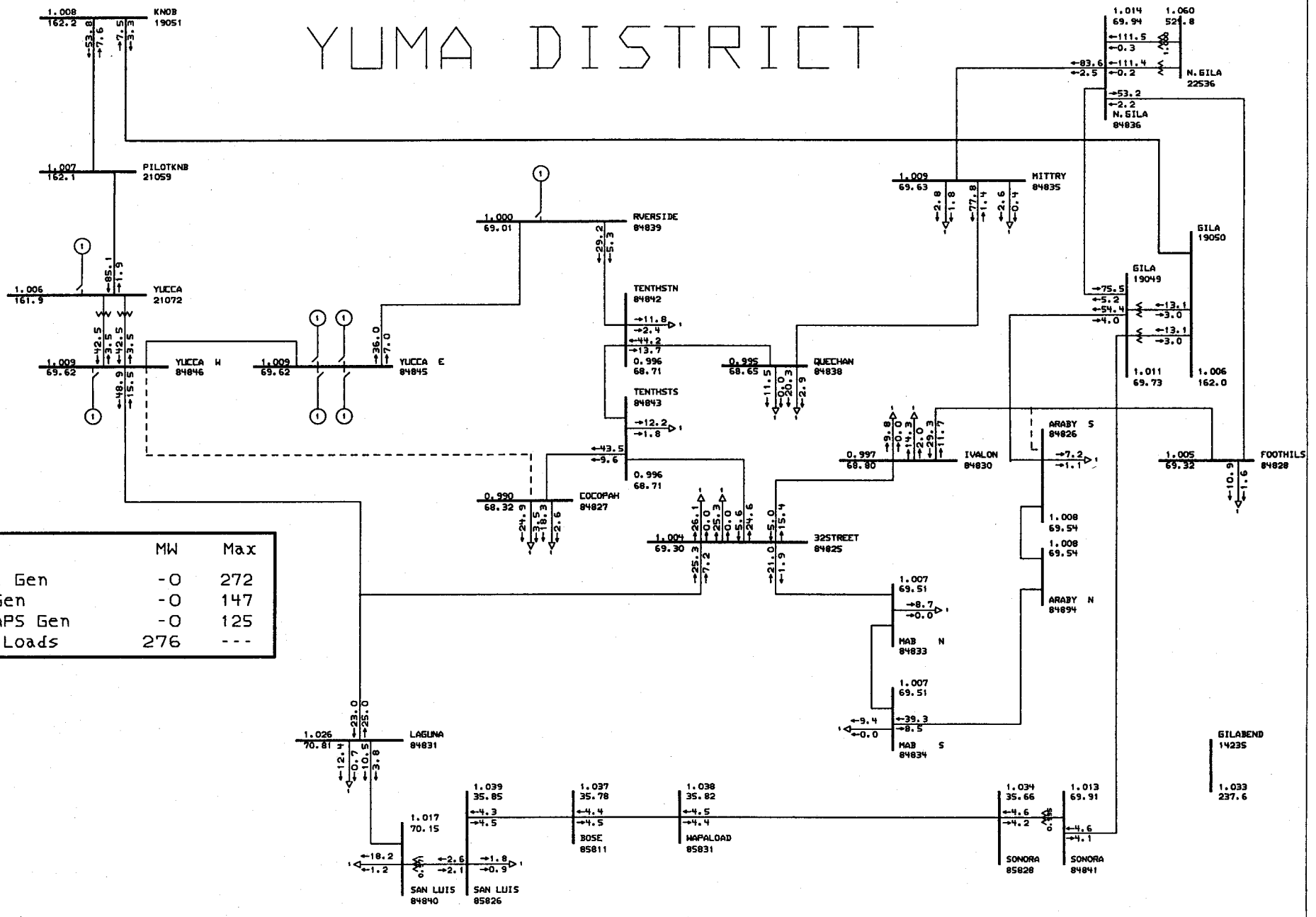

	MW	Max
Total Gen	-0	272
APS Gen	-0	147
Non-APS Gen	-0	125
Yuma Loads	276	---

General Electric International, Inc. PSLF Program MW/MVAR Tue Dec 31 12:55:46 2002

APS

YUMA RMR STUDY //12-05-02
Yucca-Cocopah outage
2005 Base Case//yuma05a1 //sm04#15 & sm05#56

c:\upslf13\yuma1.drw
yuma05a1.sav
Rating = 1

YUMA DISTRICT

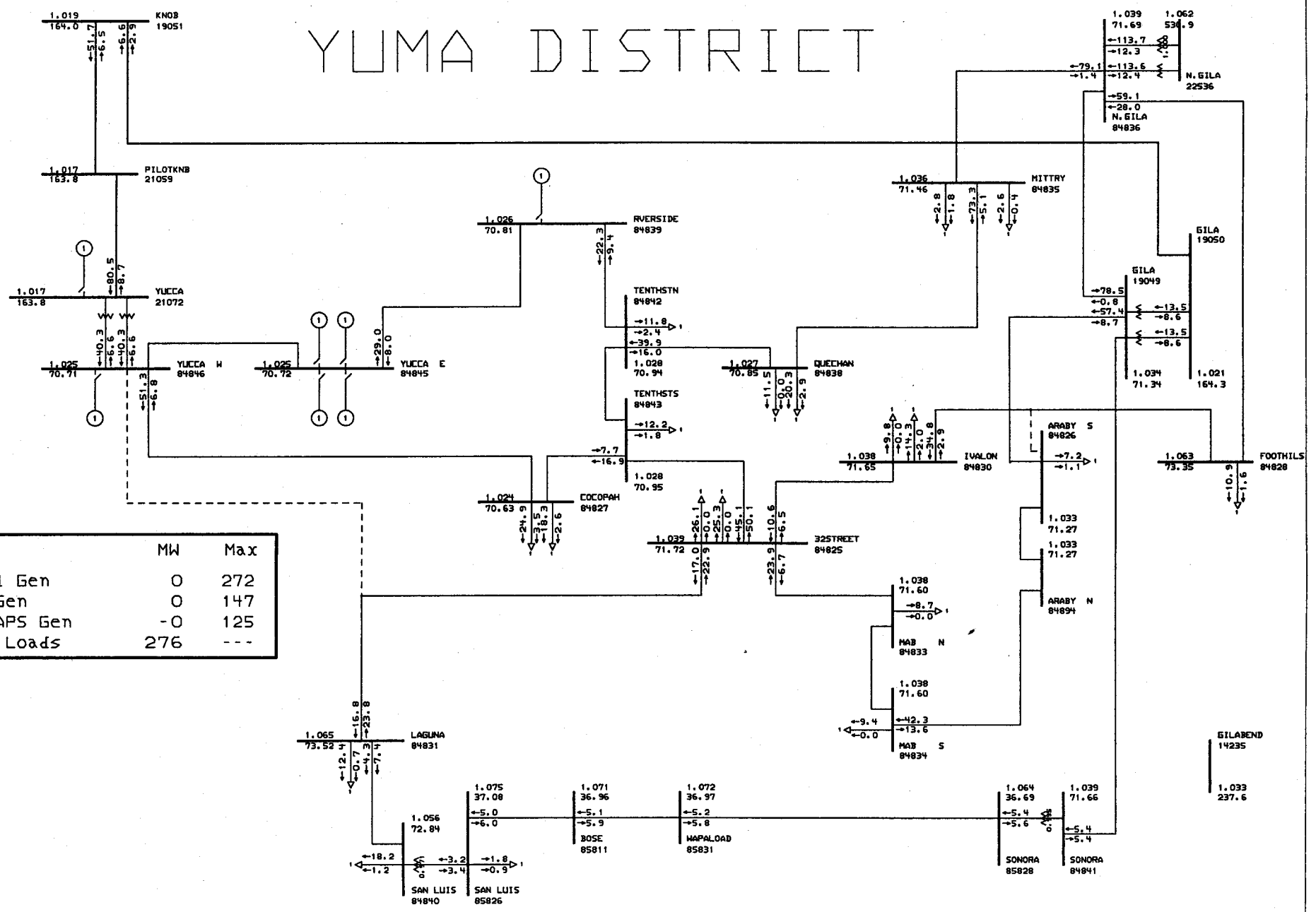

	MW	Max
Total Gen	0	272
APS Gen	0	147
Non-APS Gen	-0	125
Yuma Loads	276	---

General Electric International, Inc. PSLF Program MW/MVAR Tue Dec 31 12:56:54 2002

APS

YUMA RMR STUDY //12-05-02
Yucca-Laguna tap outage
2005 Base Case//yuma05a1 //sm04#15 & sm05#56

c:\upslf13\yuma1.drw
yuma05a1.sav
Rating = 1

A150

YUMA DISTRICT

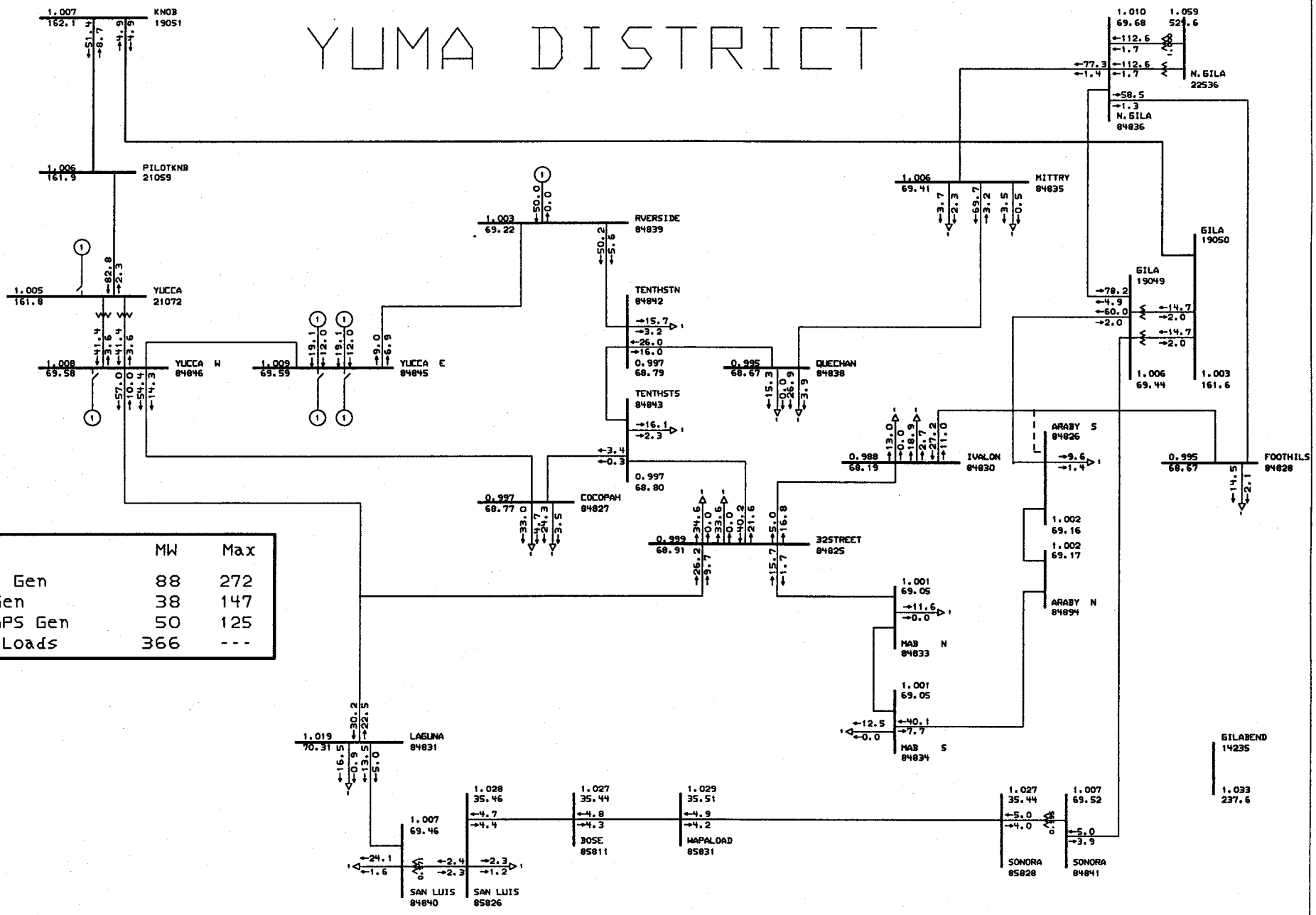

	MW	Max
Total Gen	88	272
APS Gen	38	147
Non-APS Gen	50	125
Yuma Loads	366	---

General Electric International, Inc. PSLF Program MW/MVAR Tue Dec 31 12:59:11 2002

APS

YUMA RMR STUDY //12-05-02

2005 Base Case//yuma05b1 //sm04#15 & sm05#56

c:\upslf13\yuma1.drw
c:\upslf13\yuma05b1.sav
Rating = 1

YUMA DISTRICT

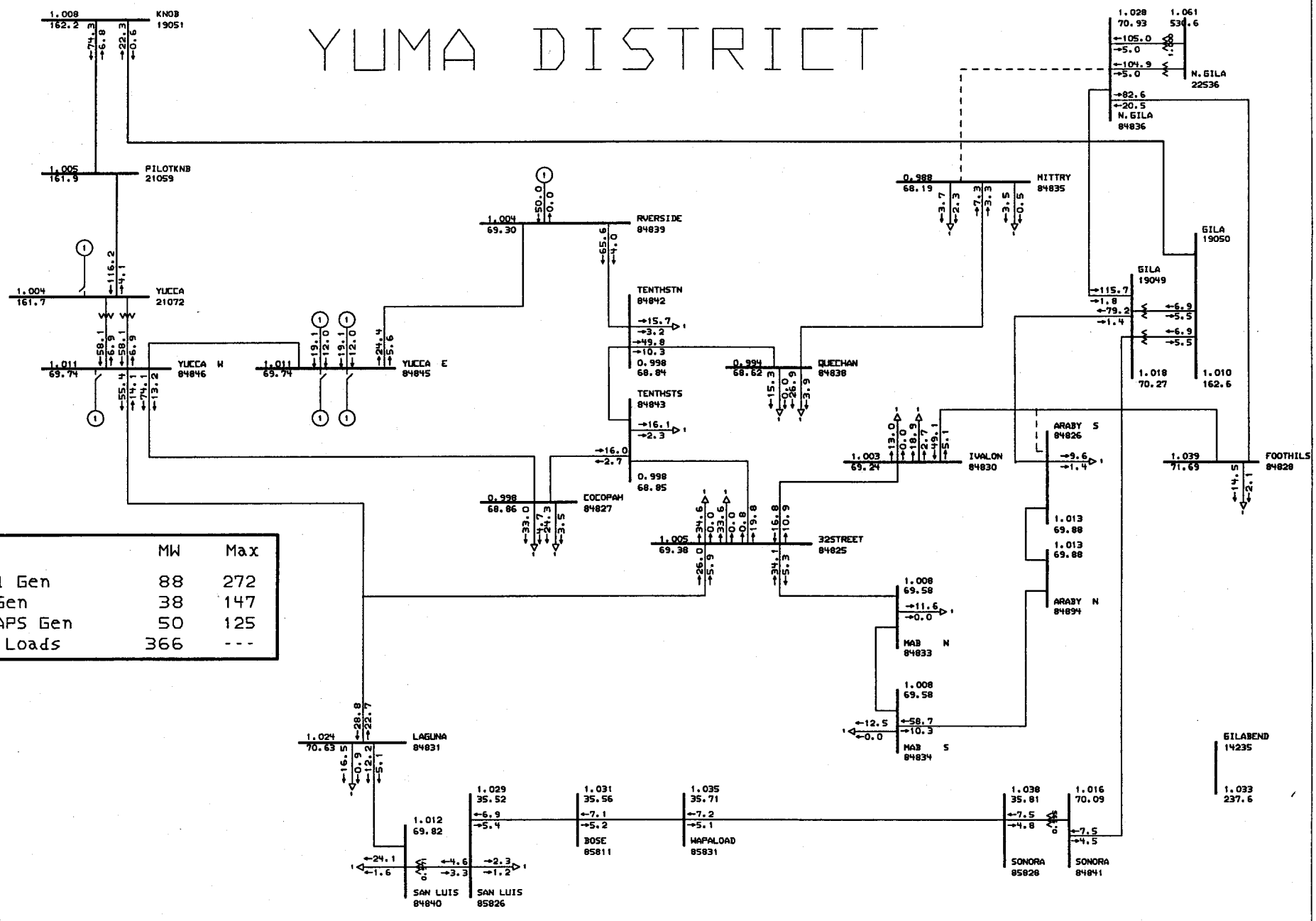

	MW	Max
Total Gen	88	272
APS Gen	38	147
Non-APS Gen	50	125
Yuma Loads	366	---

A1C2

General Electric International, Inc. PSLF Program MW/MVAR Tue Dec 31 13:00:37 2002

APS

YUMA RMR STUDY //12-05-02
N.Gila-Mittry outage
2005 Base Case//yuma05b1 //sm04#15 & sm05#56

c:\upslf13\yuma1.drw
yuma05b1.sav
Rating = 1

YUMA DISTRICT

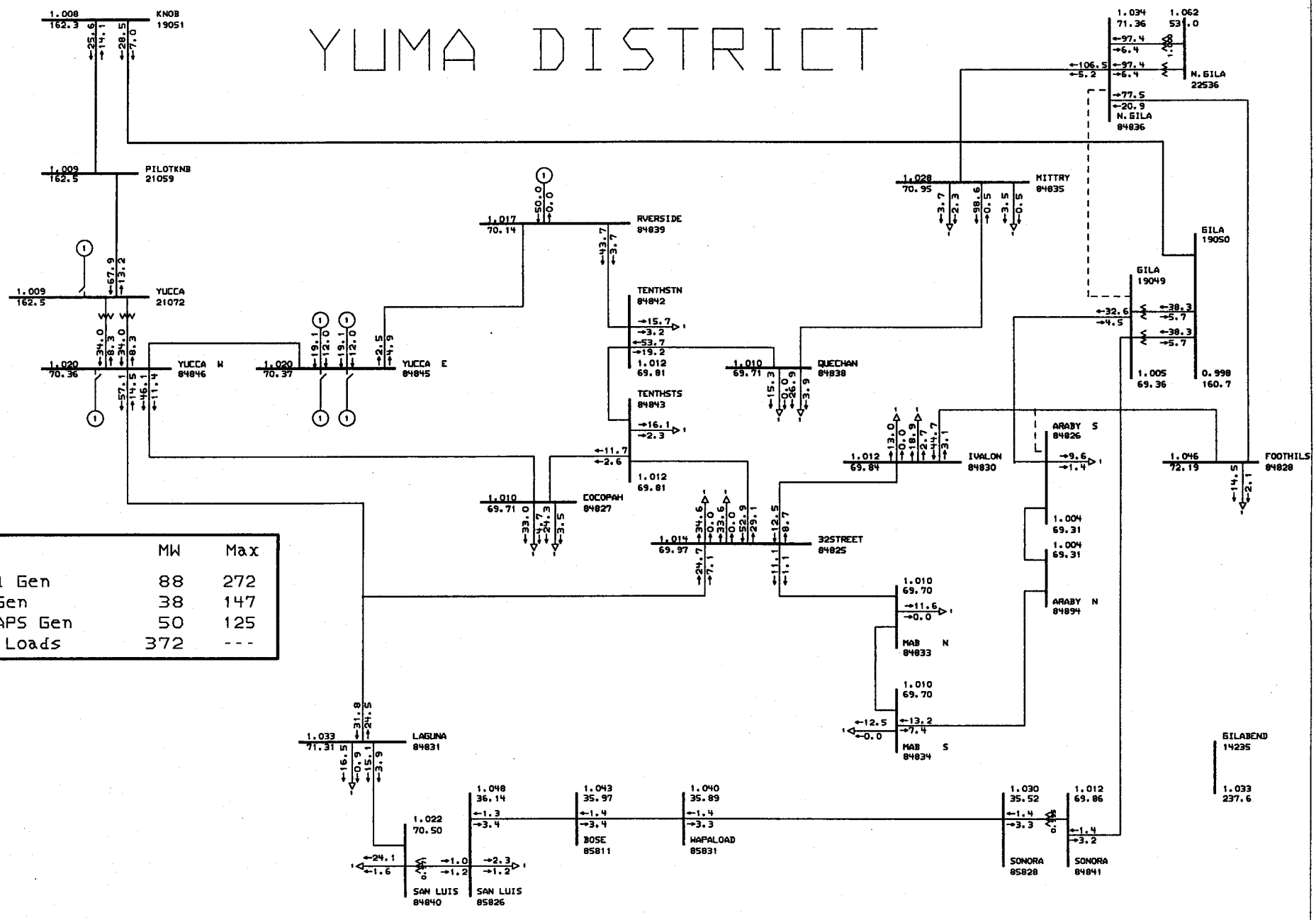

	MW	Max
Total Gen	88	272
APS Gen	38	147
Non-APS Gen	50	125
Yuma Loads	372	---

A 152

General Electric International, Inc. PSLF Program MW/MVAR Tue Dec 31 13:01:49 2002

APS

YUMA RMR STUDY //12-05-02
N.Gila-Gila outage
2005 Base Case//yuma05b1 //sm04#15 & sm05#56

c:\upslf13\yuma1.drw
yuma05b1.sav
Rating = 1

YUMA DISTRICT

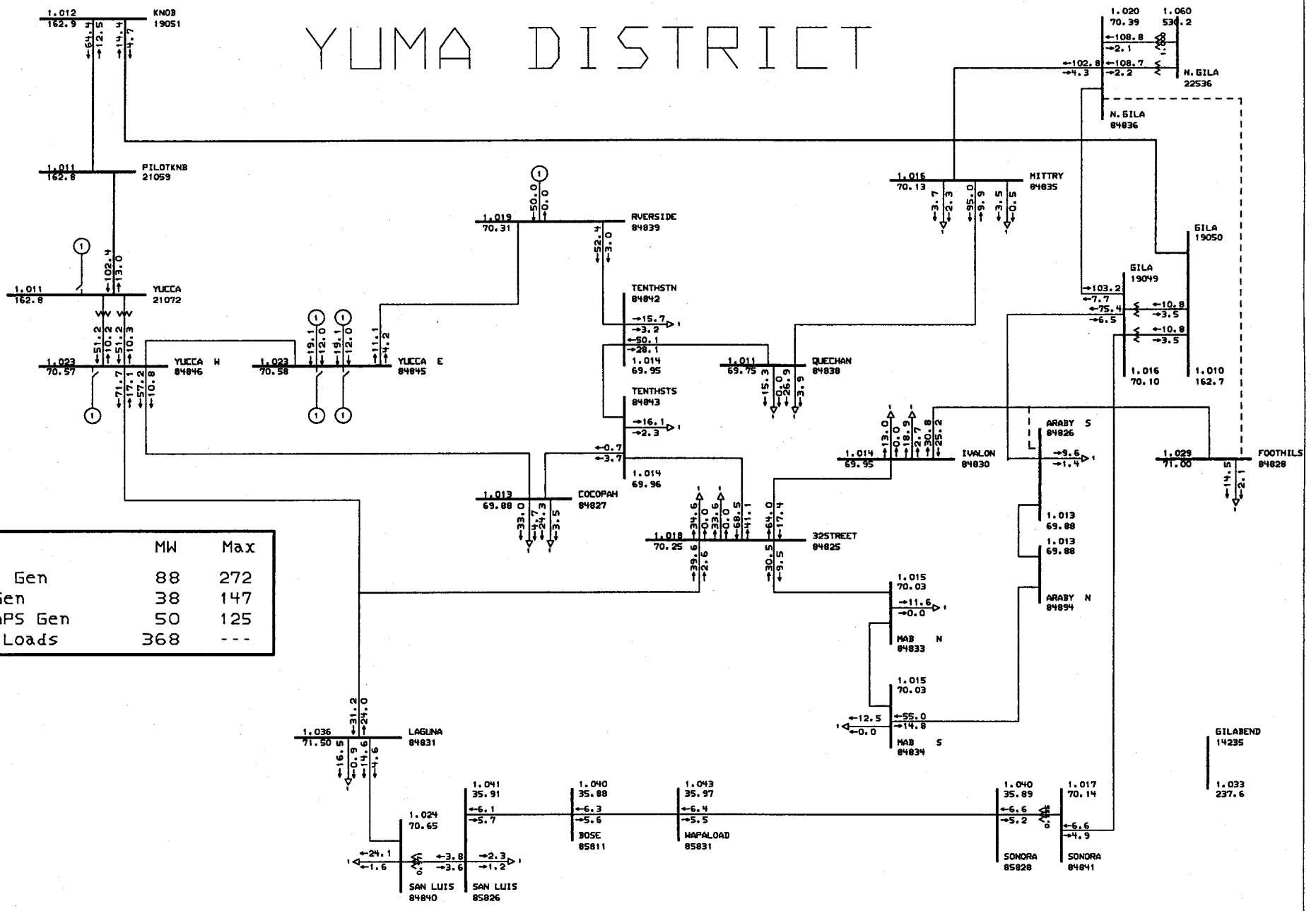

	MW	Max
Total Gen	88	272
APS Gen	38	147
Non-APS Gen	50	125
Yuma Loads	368	---

General Electric International, Inc. PSLF Program MW/MVAR Tue Dec 31 13:03:52 2002

APS

YUMA RMR STUDY //12-05-02
N.Gila-Foothills outage
2005 Base Case//yuma05b1 //sm04#15 & sm05#56

c:\upslf13\yuma1.drw
yuma05b1.sav
Rating = 1

YUMA DISTRICT

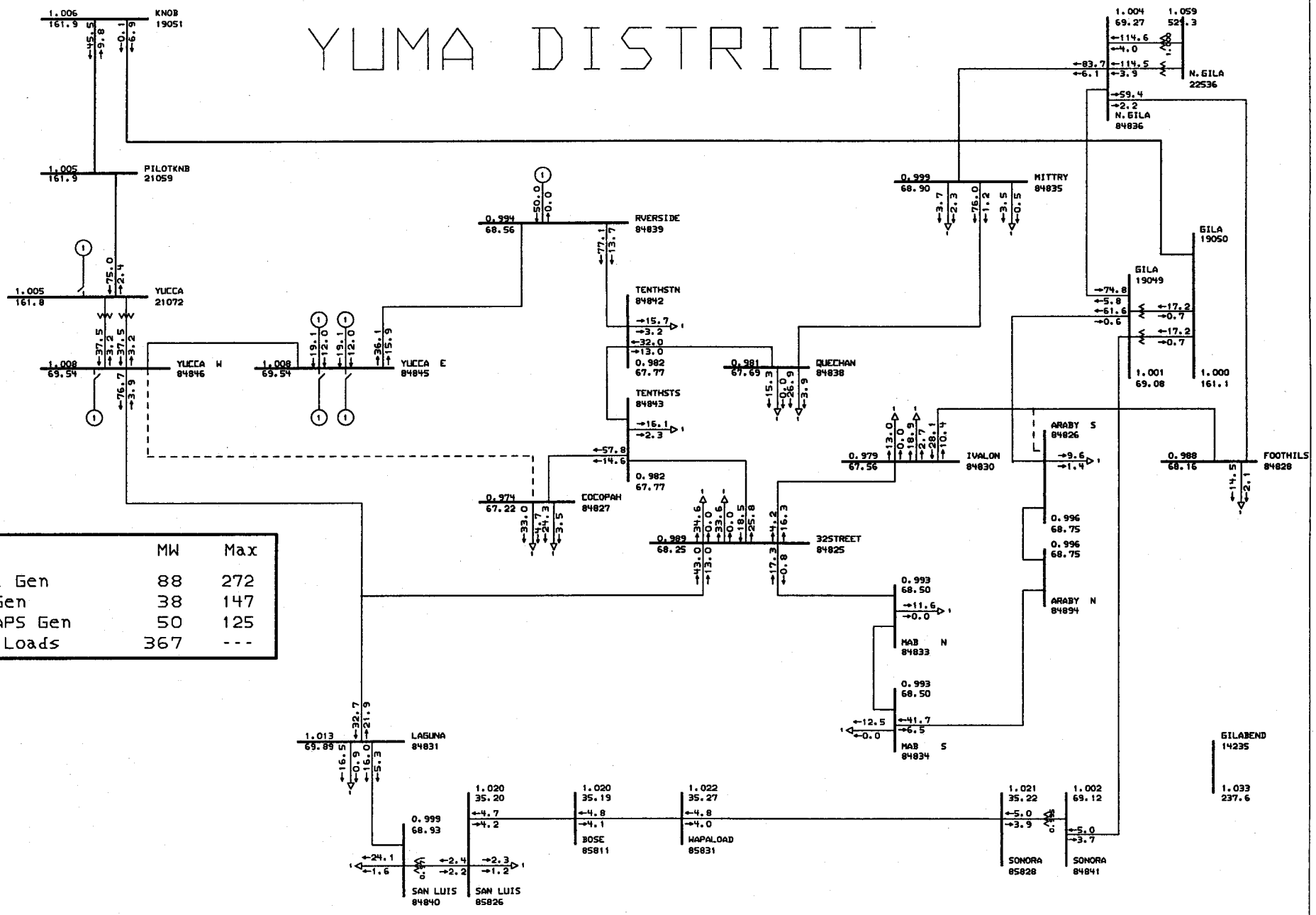

	MW	Max
Total Gen	88	272
APS Gen	38	147
Non-APS Gen	50	125
Yuma Loads	367	---

General Electric International, Inc. PSLF Program MW/MVAR Tue Dec 31 13:04:52 2002

YUMA RMR STUDY //12-05-02
Yucca-Cocopah outage
2005 Base Case//yuma05b1 //sm04#15 & sm05#56

c:\upslf13\yuma1.drw
yuma05b1.sav
Rating = 1

YUMA DISTRICT

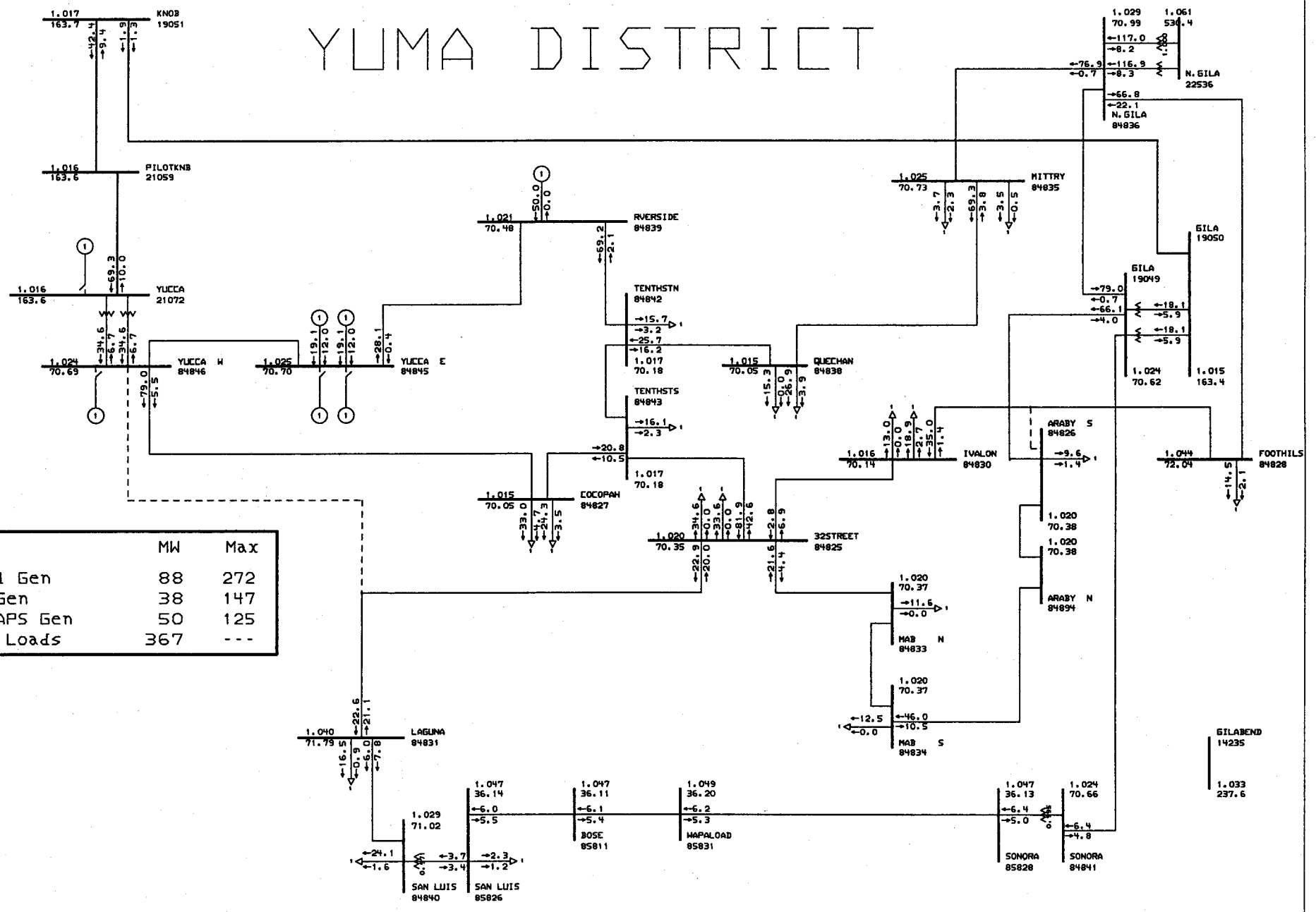

	MW	Max
Total Gen	88	272
APS Gen	38	147
Non-APS Gen	50	125
Yuma Loads	367	---

General Electric International, Inc. PSLF Program MW/MVAR Tue Dec 31 13:05:56 2002

APS

YUMA RMR STUDY //12-05-02
Yucca-Laguna tap outage
2005 Base Case//yuma05b1 //sm04#15 & sm05#56

c:\upslf13\yuma1.drw
yuma05b1.sav
Rating = 1

YUMA DISTRICT

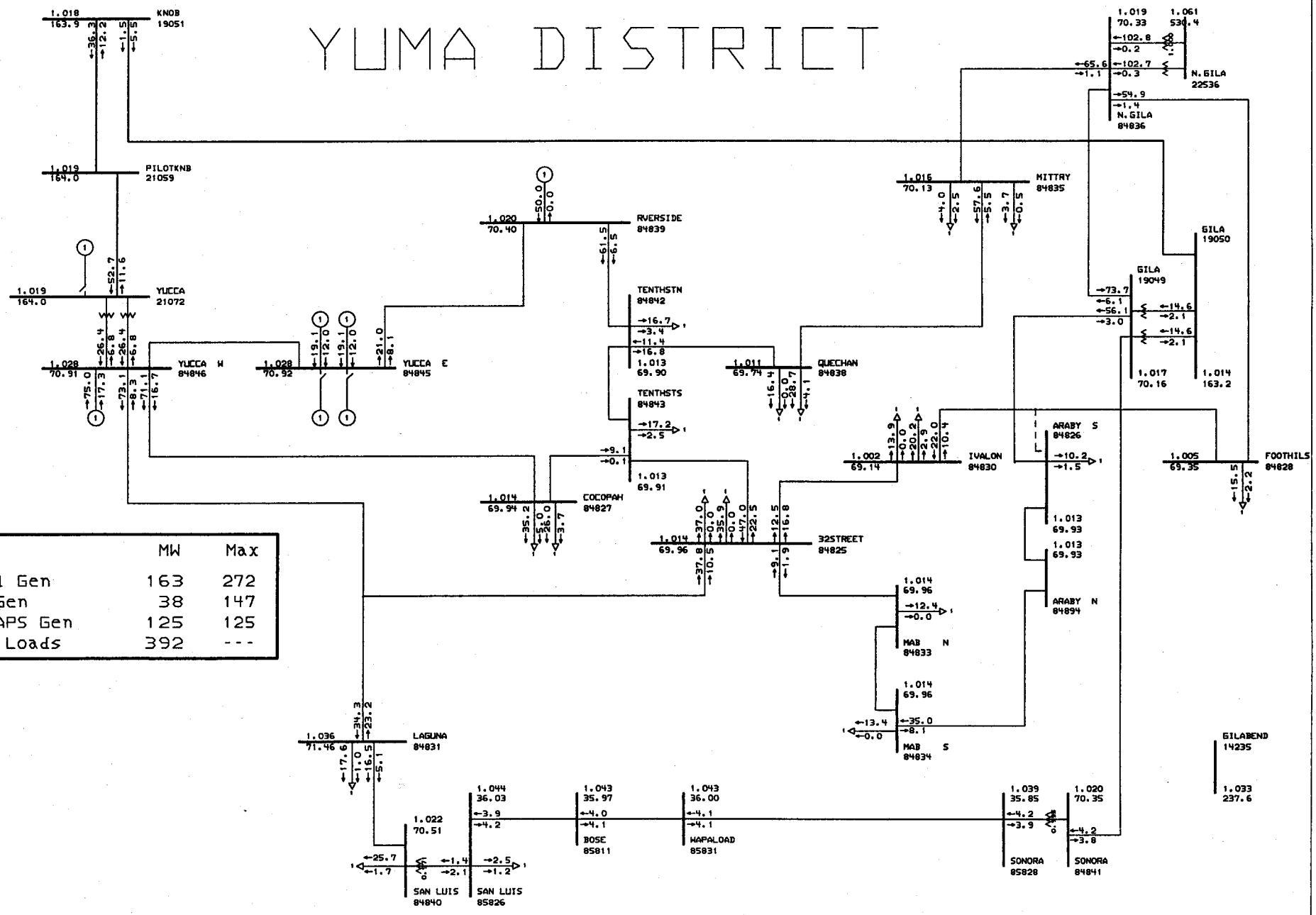

	MW	Max
Total Gen	163	272
APS Gen	38	147
Non-APS Gen	125	125
Yuma Loads	392	---

General Electric International, Inc. PSLF Program MW/MVAR Tue Dec 31 13:06:22 2002

APS

YUMA RMR STUDY //12-05-02

2005 Base Case//yuma05c1 //sm04#15 & sm05#56

c:\upslf13\yuma1.drw
c:\upslf13\yuma05c1.sav
Rating = 1

YUMA DISTRICT

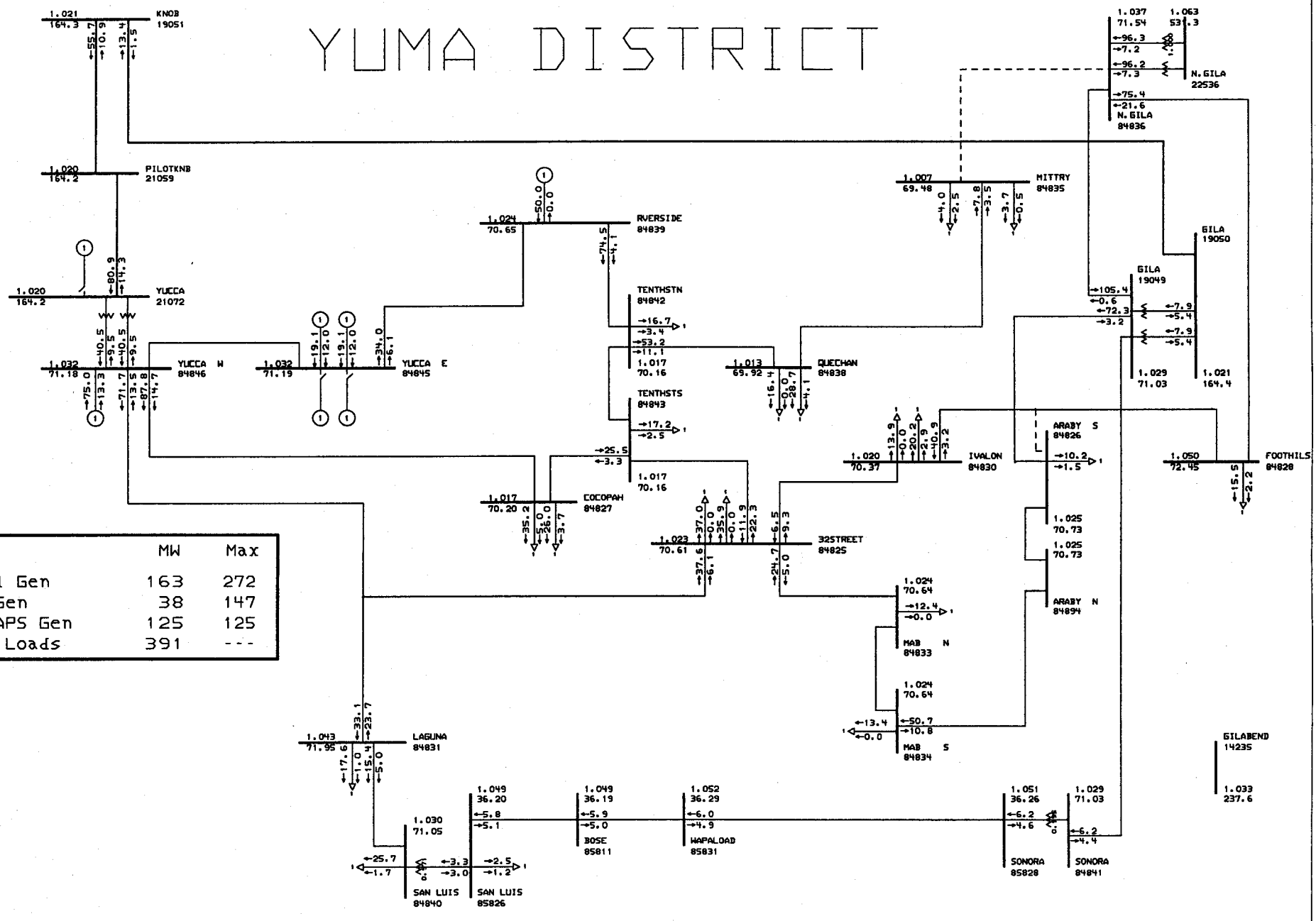

	MW	Max
Total Gen	163	272
APS Gen	38	147
Non-APS Gen	125	125
Yuma Loads	391	---

General Electric International, Inc. PSLF Program MW/MVAR Tue Dec 31 13:08:37 2002

APS

YUMA RMR STUDY //12-05-02
N.Gila-Mittry outage
2005 Base Case//yuma05c1 //sm04#15 & sm05#56

c:\upslf13\yuma1.drw
yuma05c1.sav
Rating = 1

YUMA DISTRICT

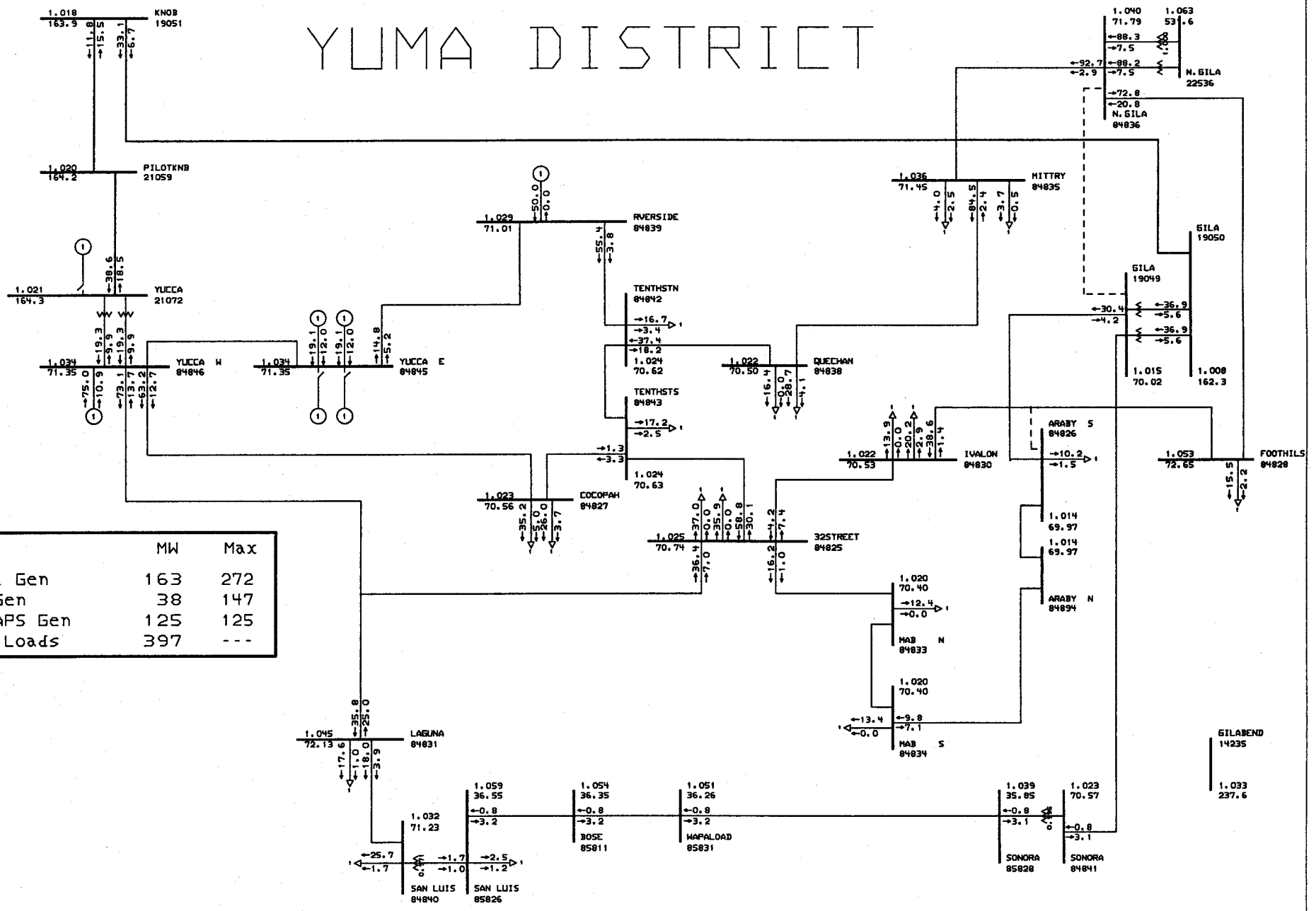

	MW	Max
Total Gen	163	272
APS Gen	38	147
Non-APS Gen	125	125
Yuma Loads	397	---

General Electric International, Inc. PSLF Program MW/MVAR Tue Dec 31 13:09:51 2002

APS

YUMA RMR STUDY //12-05-02
N.Gila-Gila outage
2005 Base Case//yuma05c1 //sm04#15 & sm05#56

c:\upslf13\yuma1.drw
yuma05c1.sav
Rating = 1

YUMA DISTRICT

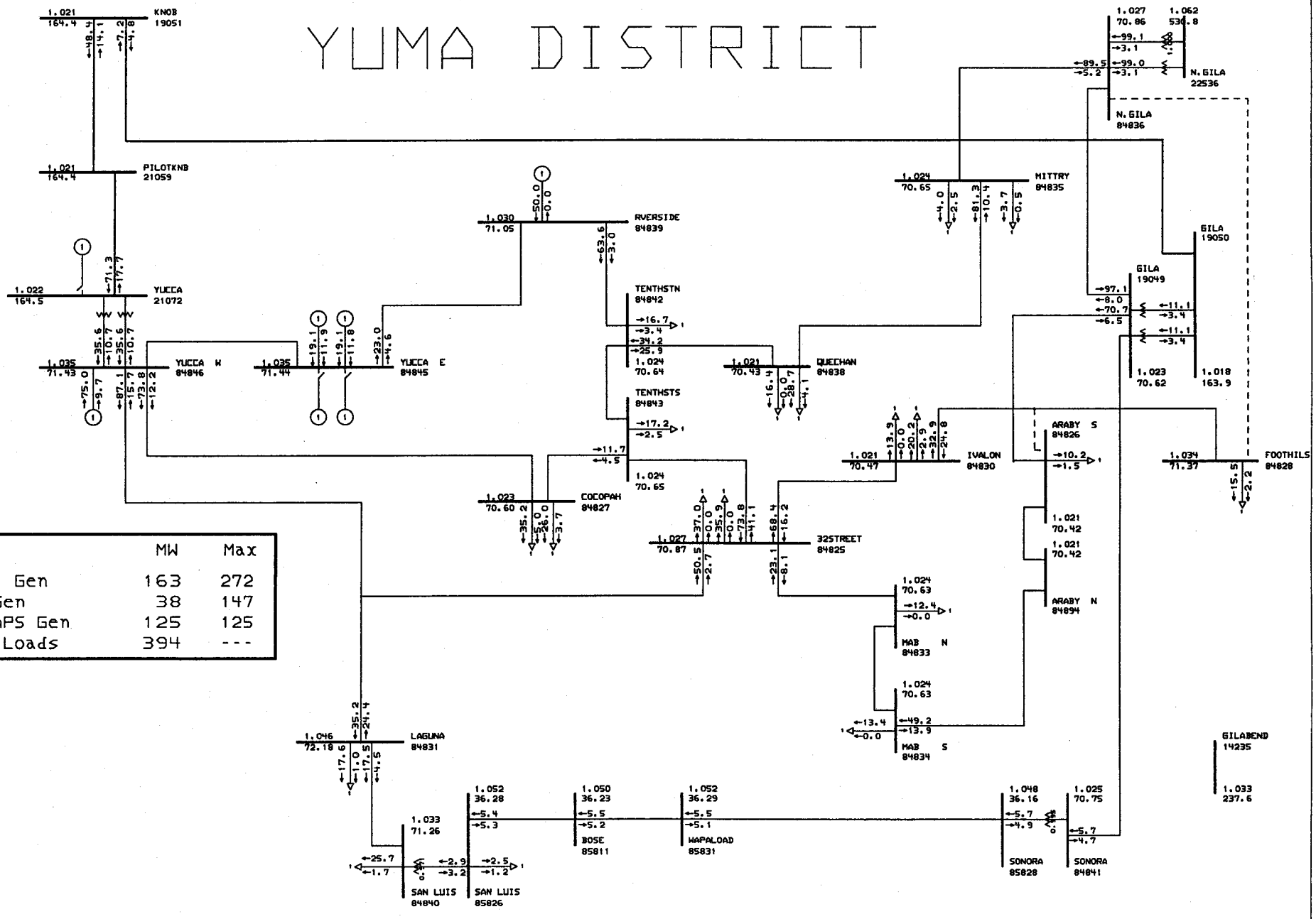

	MW	Max
Total Gen	163	272
APS Gen	38	147
Non-APS Gen	125	125
Yuma Loads	394	---

4160

General Electric International, Inc. PSLF Program MW/MVAR Tue Dec 31 13:11:05 2002

APS

YUMA RMR STUDY //12-05-02
N.Gila-Foothills outage
2005 Base Case//yuma05c1 //sm04#15 & sm05#56

c:\upslf13\yuma1.drw
yuma05c1.sav
Rating = 1

YUMA DISTRICT

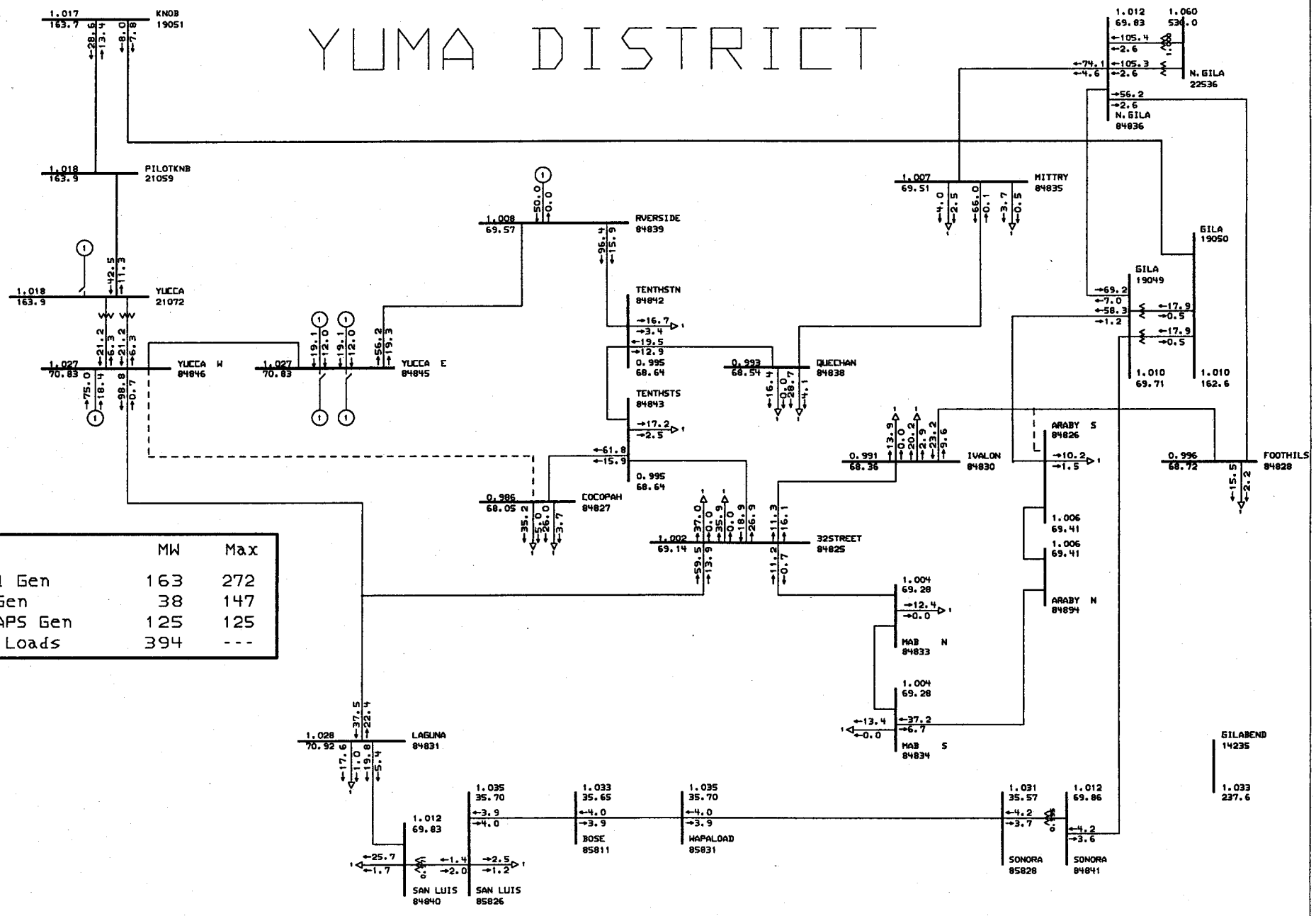

	MW	Max
Total Gen	163	272
APS Gen	38	147
Non-APS Gen	125	125
Yuma Loads	394	---

General Electric International, Inc. PSLF Program MW/MVAR Tue Dec 31 13:12:30 2002

APS

YUMA RMR STUDY //12-05-02
Yucca-Cocopah outage
2005 Base Case//yuma05c1 //sm04#15 & sm05#56

c:\upslf13\yuma1.drw
yuma05c1.sav
Rating = 1

A-1-1

YUMA DISTRICT

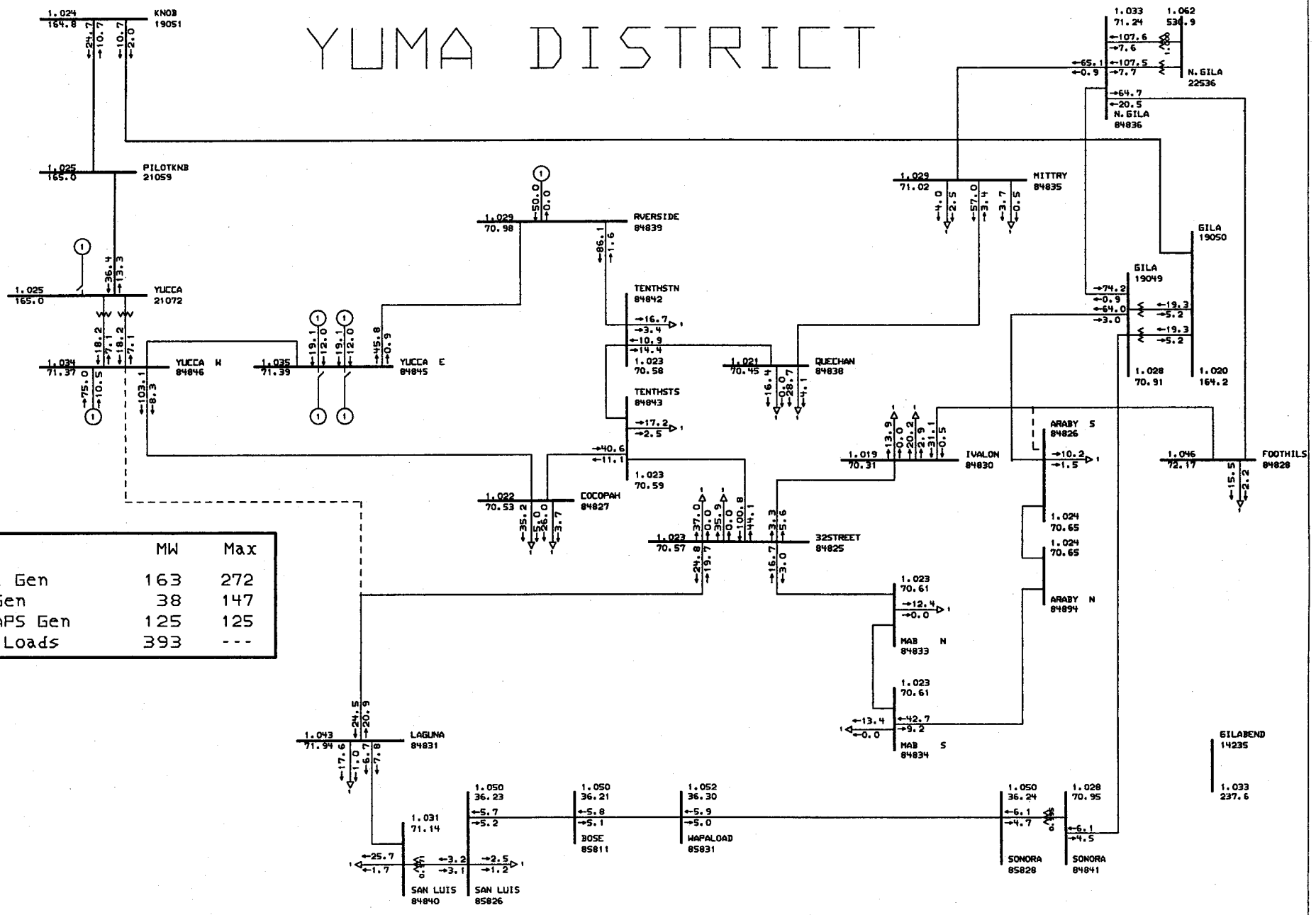

	MW	Max
Total Gen	163	272
APS Gen	38	147
Non-APS Gen	125	125
Yuma Loads	393	---

General Electric International, Inc. PSLF Program MW/MVAR Tue Dec 31 13:13:51 2002

APS

YUMA RMR STUDY //12-05-02
Yucca-Laguna tap outage
2005 Base Case//yuma05c1 //sm04#15 & sm05#56

c:\upslf13\yuma1.drw
yuma05c1.sav
Rating = 1

417

B

Appendix B

Multi-Area Production Simulation Program Description

Multi-Area Production Simulation

(MAPS)

Program Description

Copyright © 1997–2002 General Electric Company

January 2002

Table of Contents

Section		Page
	MAPS Unique Capabilities	1
II	Modeling Capabilities	3
III	MAPS Applications	4
IV	Production Costing	6
V	Transmission Network	14
VI	Data Input/Output	16
VII	Hardware Specifications for Running MAPS and MRA	22
VIII	MAPS Licensees	22
IX	MAPS Pricing	22
X	MAPS Publications	23

Multi-Area Production Simulation (MAPS)

I. MAPS Unique Capabilities

MAPS is a highly detailed model that calculates hour-by-hour production costs while recognizing the constraints on the dispatch of generation imposed by the transmission system. When the program was initially developed over twenty years ago, its primary use was as a generation and transmission planning tool to evaluate the impacts of transmission system constraints on the system production cost. In the current deregulated utility environment, the acronym MAPS may more also stand for Market Assessment & Portfolio Strategies because of the model's usefulness in studying issues such as market power and the valuation of generating assets operating in a competitive environment.

The unique modeling capabilities of MAPS use a detailed electrical model of the entire transmission network, along with generation shift factors determined from a solved ac load flow, to calculate the real power flows for each generation dispatch. This enables the user to capture the economic penalties of redispatching the generation to satisfy transmission line flow limits and security constraints.

Separate dispatches of the interconnected system and the individual companies' own load and generation are performed to determine the economic interchange of energy between companies. Several methods of cost reconstruction are available to compute the individual company costs in the total system environment. The chronological nature of the hourly loads is modeled for all hours in the year. In the electrical representation, the loads are modeled by individual bus.

In addition to the traditional production costing results, MAPS can provide information on the hourly spot prices at individual buses and on the flows on selected transmission lines for all hours in the year, as well as identifying the companies responsible for the flows on a given line.

Because of its detailed representation of the transmission system, MAPS can be used to study issues that often cannot be adequately modeled with conventional production costing software. These issues include:

- **Market Structures** – MAPS is being used extensively to model emerging market structures in different regions of the United States. It has been used to model the New York, New England, PJM and California ISOs for market power studies, stranded cost estimates, and project evaluations.

- **Transmission Access** – MAPS calculates the hour spot price ($/MWh) at each bus modeled, thereby defining a key component of the total avoided cost that is used in formulating contracts for transmission access by non-utility generators and independent power producers.

- **Loop Flow or Uncompensated Wheeling** – The detailed transmission modeling and cost reconstruction algorithms in MAPS combine to identify the companies contributing to the flow on a given transmission line and to define the production cost impact of that loading.

- **Transmission Bottlenecks** – MAPS can determine which transmission lines and interfaces in the system are bottlenecks and how many hours during the year these lines are limiting. Next, the program can be used to assess, from an economic point of view, the feasibility of various methods, such as transmission line upgrades or the installation of phase-angle regulators for alleviating bottlenecks.

- **Evaluation of New Generation, Transmission, or Demand-Side Facilities** – MAPS can evaluate which of the available alternatives under consideration has the most favorable impact on system operation in terms of production costs and transmission system loading.

- **Power Pooling** – The cost reconstruction algorithms in MAPS allow individual company performance to be evaluated with and without pooling arrangements, so that the benefits associated with pool operations can be defined.

Table 1 shows how MAPS models the bulk power system and yields an accurate through-time simulation of system operation.

Table 1

MAPS Models the Bulk Power System

Generation	Transmission	Loads	Transactions
Detailed Representation	Tracks Individual Flows	Chronological by Bus	Automatic Evaluation
Secure Dispatch	Obeys Real Limits	Varying Losses	Location Specific

II. Modeling Capabilities

MAPS has evolved to study the management of a power system's generation and transmission resources to minimize generation production costs while considering transmission security. The modeling capabilities of MAPS are summarized below:

- **Time Frame** – One year to several years with ability to skip years.
- **Company Models** – Up to 175 companies.
- **Load Models** – Up to 175 load forecasts. The load shapes can include all 365 days or automatically compress to a typical week (seven different day shapes) per month. The day shapes can be further compressed from 24 to 12 hours, with bi-hourly loads.
- **Generation** – Up to 7,500 thermal units, 500 pondage plants, 300 run-of-river plants, 50 energy-storage plants, 15 external contracts, 300 units jointly owned, and 2,000 fuel types. Thermal units have full and partial outages, daily planned maintenance, fixed and variable operating and maintenance costs, minimum down-time, must-run capability, and up to four fuels at a unit.
- **Network Model** – 30,000 buses, 60,000 lines, 100 phase-angle regulators and 10 multi-terminal High-Voltage Direct Current lines. Line or interface transmission limits may be set using operating nomograms as well as thermal, voltage and stability limits. Line or interface limits may be varied by generation availability. Transmission losses may vary as generation and loads vary, approximating the ac power flow behavior, or held constant, which is the usual production simulation assumption.
- **Marginal Costs** – Marginal costs for an increment such as 100 MW can be identified by running two cases, one 100 MW higher, with or without the same commitment and pumped-storage hydro schedule. A separate routine prepares the cost difference summaries. Hourly bus spot prices are also computed.
- **Operating Reserves** – Modeled on an area, company, pool and system basis.
- **Secure Dispatch** – Up to 5,000 lines and interfaces and nomograms may be monitored. The effect of hundreds of different network outages are considered each study hour.
- **Report Analyzer** – MAPS allows the simulation results to be analyzed through a powerful report analyzer program, which incorporates full screen displays, customizable output reports, graphical displays and databases. The built-in programming language allows the user to rapidly create custom reports.

Accounting – Separate commitment and dispatches are done for the system and for the company own-load assumptions, allowing cost reconstruction and cost splitting on a licensee-agreed basis. External economy contracts are studied separately after the base dispatch each hour.

Bottom Line – Annual fuel plus O&M costs for each company, fuel consumption, and generator capacity factors.

III. MAPS Applications

The program's unique combination of generation, transmission, loads and transaction details has broadened the potential applications of a production simulation model. Since both generation and transmission are available simultaneously with MAPS, the user can easily evaluate the system and company impacts of non-utility generation siting and transmission considerations.

In addition to calculating the usual production cost quantities, MAPS is able to calculate the market clearing prices (marginal costs or bus spot prices) at each load and generation bus throughout the system. For the load buses, the price reflects the cost of generating the next increment of energy somewhere on the system, and the cost of delivering it from its source of generation to the specific bus. Because the production simulation in MAPS recognizes the constraints imposed by the transmission system, the market clearing prices include the costs associated with the incremental transmission losses as well as the costs incurred in redispatching the generation because of transmission system overloads. Figure 1 shows the

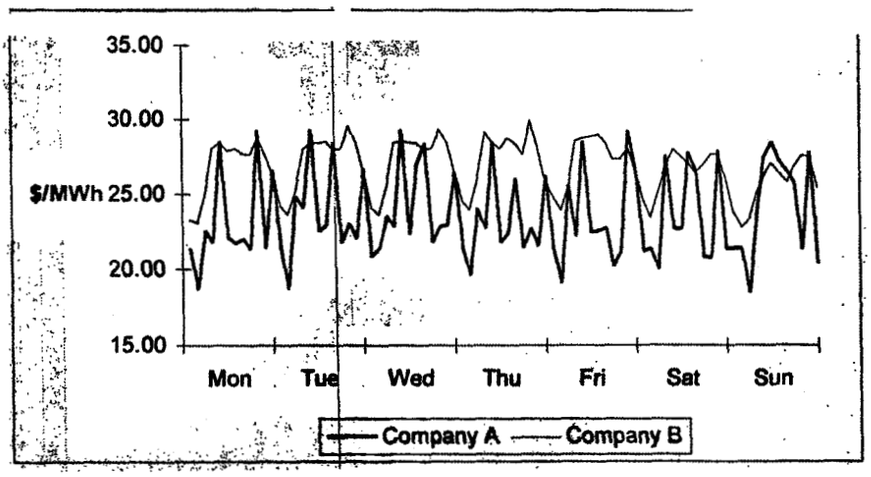

Figure 1. Market clearing prices vary with time and location.

variation in market clearing prices of two separate companies. The company wide clearing price is the weighted average of the clearing prices at the load buses.

MAPS is also able to calculate and constrain both the actual electrical flows on the transmission system and the scheduled flows assigned to individual contract paths. The actual real power flows on the network are based on the bus-specific location of the load and on the generation being dispatched to serve the load. The scheduled flows include firm company-to-company transactions that are delivered from the seller to the buyer over a negotiated path. The scheduled flows also include the generation from remotely owned units, which is delivered to the owning company over an assigned path, and generation that is delivered to remotely owned load.

The simultaneous modeling of actual and scheduled flows is especially important in modeling the Western region of the US where the scheduled flows often have a major impact on the operation of the system. Figure 2 shows the hourly flows on one of the WSCC interchange paths where the scheduled flows on the path are limiting while the actual flows are not,

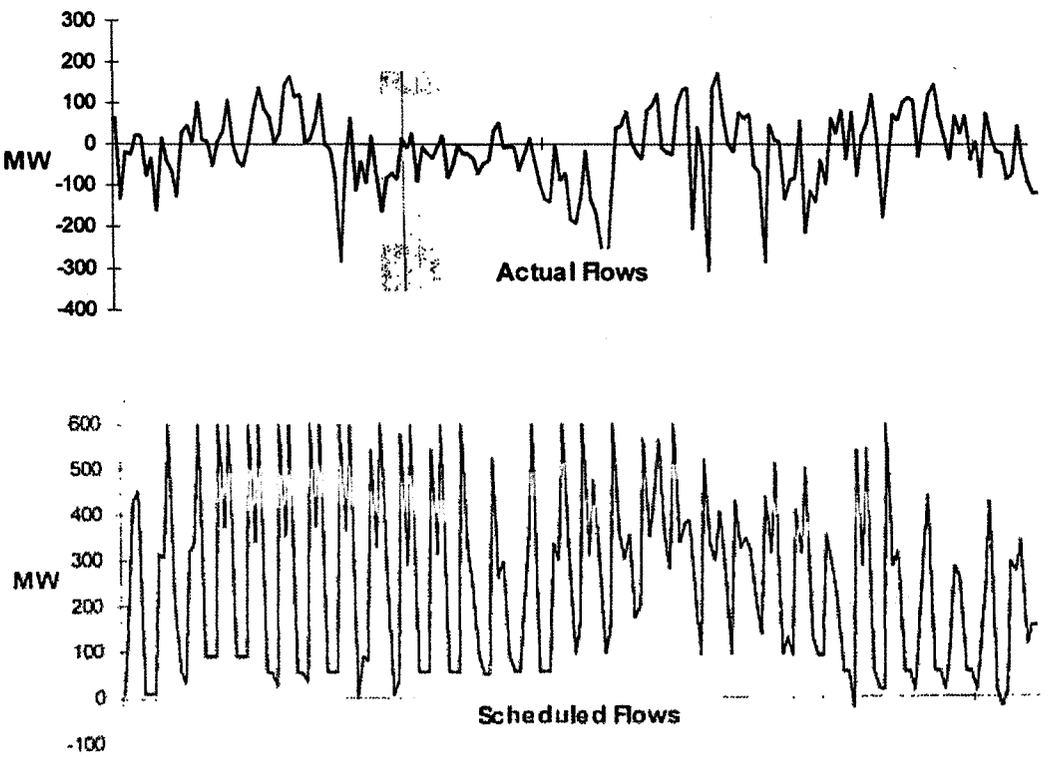

Figure 2. Example of hourly actual and scheduled flows.

resulting in the generation dispatch being constrained by scheduled rather than actual physical limits. This is important in identifying the contract paths that have available transfer capability and could be used to deliver power from potential new development sites.

IV. Production Costing

MAPS models the system chronologically on an hourly basis, dispatching the generation to serve the load for all hours in a year. As a result, MAPS captures the diversity that may exist throughout the system, and accurately models resources such as energy storage and demand-side management.

Load Data

The hourly load data is input to the program in EEI (Edison Electric Institute) format for each load forecast area. These hourly load profiles are then adjusted to meet the peak and energy forecasts input to the model on a monthly or annual basis. To accurately calculate the electrical flows on the transmission system, MAPS requires information on the hourly loads at each bus in the system. This is specified by assigning one, or a combination of several hourly load profiles to each load bus.

In addition to studying all the hours in the year, MAPS can study all the days in the year on a bi-hourly basis, or a typical week per month on an hourly or bi-hourly basis. With these modeling options, MAPS simulates the loads in chronological order and does not sort them into load duration curves.

Thermal Unit Characteristics

Essentially all the thermal unit characteristics input to MAPS can be changed on a weekly, monthly or annual basis. The following are the characteristics that can be modeled:

- Each unit can have up to seven loading segments (power points).
- Generating units can burn a blend of up to three fuel types in addition to the start-up fuel. The percentage of each fuel burned can vary by unit power point. Minimum fuel usage and maximum fuel limits are modeled and enforced on a monthly basis. If the maximum fuel limit is reached, the affected units will be switched to an alternate fuel.
- MAPS models fixed O&M in $/kW/year and variable O&M in $/MWh and $/fired hour. The user controls whether the variable O&M is included in determining the

order for unit commitment and dispatch. A separate bidding adder in $/MWh can also be input for each unit. This cost is added to the costs used to determine the commitment and dispatch order of the units, but is ignored when computing actual unit costs.

- MAPS calculates start-up costs as a function of the number of hours that the unit has been off-line. The user can specify whether the start-up should be included in the full-load costs used to determine the order in which the units are committed.
- In the unit commitment process, MAPS models the minimum downtime and uptime on thermal units. Units can also be identified as must-run with the user specifying that the entire unit is must-run, or only the minimum portion, with the remainder of the unit committed on an economic basis as needed.
- MAPS allows the user to specify the portion of each thermal unit that can be counted toward meeting the load plus spinning reserve requirements, and the portion that can be considered as quick-start capacity. A spinning reserve credit can also be taken for unused pondage hydro and energy-storage generating capacity.
- Full and partial forced outage information is specified to MAPS in terms of forced outage rates.
- Maintenance can be specified on a daily basis for any number of maintenance periods during the year. The user can also identify units as unavailable for specific hours during the day.
- The thermal generating units bid into the system at their costs, based on fuel prices, O&M and emission costs, bid adders, and heat rates. Alternatively, the user can input the bid price in $/MWh by unit power point. This price will then be used in the commitment and dispatch to determine the way in which the units operate.
- MAPS allows all types of generating units (thermal, pondage, and energy storage) to be owned by more than one company in a multi-utility simulation. The output and cost of these units are allocated to the owning companies based on the user-specified percentages.
- Nearly all unit characteristics including rating, heat rates, and costs, can change on a weekly basis.

Models for Production Costing

The following sections describe various portions of the production simulation process in MAPS.

Hydro and energy-storage scheduling - MAPS offers three distinct representations for modeling hydro plants: hourly modifiers, pondage modifiers or energy-storage devices. This flexibility allows the program to accurately model each hydro plant based on its operating characteristics.

Hourly modifiers allow the user to specify the actual hour-by-hour operation of the plant in MW. This data can be specified for the 168 hours of a typical week of operation, with the option to change this data on a monthly basis. Alternatively, the hourly operation for the entire year (8,760 or 8,784 hours) can be input. This feature can also be used to model firm company transactions that can be specified on an hourly basis.

Hydro plants can also be modeled as *pondage modifiers*. Each pondage modifier is defined by a monthly minimum and maximum capacity (MW) and a monthly available energy (MWh). The minimum capacity is base-loaded for all hours in the month, representing the run-of-river portion of the plant. The remaining capacity and energy are scheduled in a peak-shaving or valley-filling mode over the month. The user identifies the specific load shape to use for scheduling the plant; options include the system load, combinations of selected company loads, or combinations of selected area loads. If several pondage units are located at sequential dams on the same river, they can be scheduled as a group to coordinate the operation of the units.

MAPS allows the user to develop scenarios for different water conditions (e.g., low, average, or high stream flows) through simple modifications to the available energy specified for the pondage modifiers.

For *energy-storage* devices, which include pumped-storage hydro and batteries, MAPS automatically schedules the operation based on economics and the characteristics of the storage device. The characteristics specified include the charging (or pumping) and generating ratings, the maximum storage capacity in MWh, the full-cycle efficiency (which recognizes losses in the pump/generate cycle), and the scheduling period (daily or weekly). The program examines the initial thermal unit commitment to develop a cost curve for the week. This cost curve is then combined with the appropriate chronological load profile to develop an hourly schedule, which minimizes costs without violating the storage constraints. This schedule is locked-in and the thermal unit commitment process is repeated to develop the final commitment schedule.

For all three hydro representations, the user also specifies the ownership of the plant, energy costs in $/MWh, and the transmission system bus or buses at which the plant is located. For each hourly modifier and pondage plant, you can also specify an economic dispatch price in $/MWh. If, during the dispatch of the thermal generation, the spot price at the unit's bus drops below the specified value, the unit's output will be backed down to its minimum rating (or 0 in the case of hourly modifiers) and the energy will be shifted to hours later in the week when the spot price is higher.

Dispatchable load management and non-dispatchable renewable - MAPS can model some types of dispatchable DSM and load control as thermal generating units with the appropriate characteristics and costs. Load management strategies such as batteries or thermal energy storage can be modeled as energy-storage devices.

MAPS models non-dispatchable DSM and load control and renewables such as photovoltaic or wind energy as hourly modifications to the load. This modification can be specified for the 168 hours of a typical week, with the option to change this data on a monthly basis, or by specifying the data for the entire year (8,760 or 8784 hours).

The generating units used to represent DSM, load control, and renewables can be assigned to the appropriate areas and buses throughout the system to accurately capture the dispersed nature of such resources.

Maintenance scheduling - The unit planned outages can be specified by the user, in terms of the starting and stopping dates of the maintenance period, or automatically scheduled by the program. If being scheduled by the program, the maintenance requirements can be specified as weeks of maintenance or a planned outage rate. The program schedules the maintenance on a weekly basis so as to levelize reserves (the difference between installed capacity and the sum of load plus MW on maintenance) on an area, company, pool, or system basis.

Forced outages - MAPS models the forced outages through either a Monte Carlo or recursive convolution approach. In the Monte Carlo approach, the forced outages on generating units are modeled through the use of random outages. This method is stochastic over the course of the entire year and results in the units being on forced outage for randomly selected periods during the year. The total outage time for each unit is determined by the forced outage rate, and the duration of each outage period, also known as the "mean-time-to-repair," can be specified by unit in days. Partial outages on the generating units can also be modeled, on a weekly basis. The random outage method permits accurate treatment of forced outages over the course of the year while allowing each hour to be deterministically dispatched, thus

providing for the most accurate treatment of transmission limits when operating with the detailed electrical representation.

MAPS also has the capability of using the more traditional recursive convolution technique when run in the transportation mode. This technique convolves the forced outages of the units with the loads to develop an equivalent load curve each hour, allowing the calculation of expected output for each of the generating units. In this manner, a unit with a 10% forced outage rate will have a 10% probability of being unavailable for each hour of the year. This methodology is not compatible with the more detailed transmission constrained logic, but can be used with the transportation model and the transfer limits between areas.

Hourly commitment and dispatch - The objective of the commitment and dispatch algorithms in MAPS is to determine the most economic operation of the generating units on the system, subject to the operating characteristics of the individual generating units, the constraints imposed by the transmission system, and other operational considerations such as operating and spinning reserve requirements. The economics used for commitment and dispatch can be adjusted through the use of penalty factors that can move a unit within the commitment and dispatch ordering.

MAPS models the system chronologically on an hourly basis, committing and dispatching the generation to serve the load for all hours of the year. The unit commitment process in MAPS begins by developing a priority list of the available thermal units based on their full-load operating costs. The full-load cost is calculated from the fuel price and full-load heat rate, and can optionally include the variable O&M costs, start-up costs, and a bid adder. Alternatively, the full-load cost can be based on the bid prices that were input by unit section. This priority ordering of the thermal units is used for the entire week.

The units are then committed in order of increasing full-load costs to meet the load plus spinning reserve requirements on an hourly basis, recognizing transmission constraints. This preliminary commitment for the entire week is then checked to see if any units need to be kept on-line because of minimum downtime or minimum run-time constraints.

One potential shortcoming of this process is that baseload units, which tend to be committed first because of their lower full-load costs, may be committed for just a few hours during the week to meet load plus spinning reserve, but are then kept on-line, usually at part-load, because of the minimum downtime constraints. Consequently, the average cost of these units over the course of the week is much higher than the full-load costs that were used in determining their commitment ranking. A more economic commitment might be obtained by

skipping over these units and committing intermediate or peaking units, that while they have a higher full-load cost, they can be more easily cycled from hour to hour.

The multi-pass unit commitment option is designed to commit the units based on their expected operating costs rather than their full-load costs. This is accomplished by doing the commitment in up to four passes and adjusting the daily priority costs of those units that are not committed for a specified number of hours during the day. The cost adjustment is based on the unit type (i.e., baseload, intermediate, or peaking) and an input number of hours at full, part, and minimum load operation. The type for each unit is determined from the unit's minimum downtime and input cutoff values for the minimum downtimes of baseload and peaking units. Any unit whose minimum downtime falls between these cutoff values will be modeled as an intermediate unit.

Upon completion of the commitment process for the week, the program begins the dispatch process. All of the committed units are loaded to their minimum power point, and then the program dispatches the remaining unit sections, in order of increasing incremental cost, to meet the hourly bus loads, once again recognizing the constraints imposed by the transmission system and other user-specified operating considerations.

Operational constraints - In MAPS, the production simulation is formulated as a linear programming (LP) problem where the objective function is to minimize the production costs subject to electrical and business constraints. MAPS models each security constraint as a single constraint in the LP formulation. MAPS derives these constraints from the production costing input data (for example, identified must-run units and minimum down-time for generation units) and from user-specified operating nomograms, such as those often used by system operators to represent voltage and transient stability limits. MAPS monitors the flows on individual transmission lines and interfaces on an hourly basis to ensure that the line or interface limits, or other security constraints such as import limits, are not violated while dispatching the generation system.

MAPS can also consider other user-specified contingencies such as the tripping of lines or groups of lines, or the tripping of load or generation at specified buses. The final generation dispatch developed by MAPS will be secure in the sense that the system will be operating within all its limits even under the contingency conditions.

Operating and spinning reserves - During both the unit commitment and dispatch, MAPS models operating reserve requirements for areas, companies, pools, and the entire system. The operating reserves are calculated based on a percentage of the load, a fixed MW reserve, and a percentage of continuous rating of the largest committed unit.

The total operating reserves can be met by a combination of quick-start reserves (units not actually running but which can be brought on line very quickly) and spinning reserves. The portion of operating reserves that can be met by quick-start reserves can be specified by area, company, pool, or system. The user identifies which units have quick-start capability.

A spinning reserve credit can be taken for unused generation from energy-storage units. The user can also specify the portion of each committed thermal unit that can be applied toward the spinning reserve requirements.

Emissions - MAPS models two general types of emissions. The first type of emission is a function of the amount of fuel being used. This type would typically be used to model sulfur and particulate emission. The second type of emission is a function of the unit operation, but is not directly related to the amount of fuel. This type could be used to model NOx emissions, which can decrease with increased power output.

In addition to the emission rates modeled by fuel type or by unit, the user can input, by thermal unit and emission type, the removal efficiency (in per unit) of the emission control equipment, and the removal and trading costs in dollars per ton of emission. The removal cost represents the operating costs associated with emission control equipment. The trading cost can be used to model the costs associated with the emissions that are not removed by the control equipment. These costs could include the costs related to the purchase of emission allowances.

Penalty factors on the removal and trading costs can also be input to control the extent to which these costs are included in the full-load and incremental costs used to determine the order in which the units are committed and dispatched

Representation of various power market participants - Through the appropriate assignment of loads and generation, the various participants in the power market can be represented in MAPS. Integrated utilities would have generation, transmission, and be responsible for serving load. Separate distribution entities would not own any generation but would purchase all of the energy they need to meet their load obligations. Independent power producers would be modeled as companies with generation but no transmission or load. The commitment, dispatch, and cost allocation functions in MAPS itself would represent the independent system operator. The wholesale power broker would be modeled as a company with firm contracts to buy energy from other companies, which would then be resold on a firm or economy basis.

MAPS models bilateral contracts between market participants as firm transactions between the selling and buying companies. These contracts can be specified in terms of hourly MW values,

or as minimum and maximum MW ratings and available monthly energy that would be scheduled by the program.

Purchase and sale contracts - MAPS can model internal transactions (purchases and sales contracts) between companies with the system, and external transactions with companies outside the study system.

The internal transactions can be either "firm" or "economy." Firm transactions between companies can be specified in MW on an hourly basis, or as a minimum and maximum rating (MW) and a monthly energy (MWh), which can be scheduled by MAPS. The firm transactions occur regardless of economics. The economy transactions occur between companies in the system dispatch when it is cheaper for a company to purchase energy to serve its load than to generate load with its own units.

The external contracts can also be categorized as "firm" and "economy." The primary difference is that firm external contracts are evaluated as part of the base dispatch each hour, while economy external contracts involve multiple dispatches each hour to evaluate the price paid for the energy.

Firm external contracts are modeled as unit modifiers located outside the study system, but in all other respects they are treated the same as any other system generation. Company ownerships are assigned to the units, and they are modeled in the commitment and dispatch along with the local generation.

The special feature of the economy external contract logic in MAPS is that multiple dispatches are performed each hour (both with and without each economy external contract) and the price paid for the energy is a function of the change in system operating costs. This total savings is also referred to in MAPS as the delta costs. These total savings from the transactions are divided between the system and the outside world according to a specified percentage. The system savings resulting from an external economy purchase are allocated to those companies that are net buyers of energy. Similarly, any savings from an external economy sale are allocated to those companies that are net sellers of energy.

Cost reconstruction - Within a single run of the program, MAPS can perform two separate dispatches of the system generation. In the system dispatch, the entire system is dispatched to serve the load as economically as possible, subject to the constraints imposed by the transmission system. In the company own-load dispatch, each company's resources (including its firm transactions with other companies) are economically dispatched to serve its own load. The results of the two dispatches are then used to calculate the savings that result from the

coordinated system dispatch versus the isolated company dispatches. Several methods of cost reconstruction are available to allocate these savings between the buyers and sellers and to compute the individual company costs in the system environment.

Furthermore, multiple pools within a system can be modeled in MAPS. MAPS has the capability to model economic energy transaction within a company's power pool, if desired in the simulation.

Hourly bus spot prices - MAPS computes hourly spot prices at individual buses. The bus spot price is the cost of supplying an additional MW of load at the bus and includes the cost of generating the energy, the cost of the incremental transmission losses, and any costs associated with re-dispatching the generation if this additional increment of load caused overloads on the transmission system. The difference in spot prices at two buses is the short-run marginal wheeling cost between these buses.

MAPS can also develop marginal costs on a company and pool basis. There are two types of marginal cost calculations in MAPS: incremental and delta. Incremental marginal costs are calculated from a single dispatch and are equal to the cost of the last increment of power generated. Delta costs are calculated from two dispatches and equal the average cost of the change in energy dispatched. The hourly marginal costs can be summarized for on-, mid-, and off-peak periods by month, season and year.

V. Transmission Network

MAPS contains two distinct models for representing the transmission system. The original approach uses a transportation model to limit the transfer between interconnected areas during the dispatch of the system generation. The second approach performs a transmission-constrained production simulation, using a detailed electrical model of the entire transmission network, along with generation shift factors determined from a solved ac load flow, to calculate the real power flows for each generation dispatch. This makes it possible to capture the economic penalties of redispatching the generation to satisfy transmission line flow limits and security constraints. In the electrical representation, all physical components of the transmission system are modeled, including transmission lines, phase-angle regulators, and HVDC lines.

MAPS can also operate in the mode in which both methodologies are used simultaneously. For example, MAPS can operate the system so that both the scheduled contract flows (transportation model) and actual electrical flows are calculated, with the more restrictive limits

applying. Similarly, MAPS can constrain the system based only on the transfer limits between areas while calculating the actual electrical flows throughout the system.

Most discussions about the future of power systems agree that networks will be stressed more than ever before, and the utilities will not have the luxury of observing artificial constraints. For this reason, it is important to model the actual electrical flows on the lines in addition to the transportation flows between the control areas. MAPS, with both models available, is perfectly suited to model both the current operation of a system and to examine the various ways in which the system might be operated in the future.

In both the transportation and electrical representations, MAPS calculates and limits the transmission flows on an hourly basis. In the transportation mode, the utility system is modeled as discrete operating areas containing generation and load. The transmission system is represented in terms of transfer limits on the interfaces between the interconnected areas. These limits can be different for the two directions of interface flow, and can be specified on an hourly basis. These limits can also vary on an hourly basis in response to user-specified conditions as to whether or not specified units are available (for commitment) or have been committed (for dispatch).

In the electrical representation, the load and generation are assigned to individual buses and the transmission system is modeled in terms of the individual transmission lines, interfaces (which are groupings of lines), phase-angle regulators (PARs), and HVDC lines. Limits can be specified for the flow on the lines and the operation of the PARs. These limits can change on an hourly basis as a function of loads, generation, and flows elsewhere on the system. Examples of the types of operating nomograms that can be modeled in MAPS include:

- transmission line or interface limit as a function of area or company load
- net imports to an area as a function of load
- simultaneous imports into an area
- minimum generation by area.

The user can control the extent to which MAPS will enforce the limits assigned to an interchange path, transmission line, or other system element. Each monitored element is assigned an overload cost in $/MWh. If violating the limit will result in production cost savings greater than or equal to the overload cost, the limit will be ignored. If the monitored element has a small overload cost, it has "soft" limits that will be monitored but will most likely not result in a significant redispatch of the generation. An element with a large overload cost

will be modeled with "hard" limits that are strictly enforced and rarely, if ever, violated, necessitating a redispatch of the generation to correct the violations.

VI. Data Input/Output

The MAPS data is input through data tables that are stored as text files, which can be easily accessed and edited through standard text editors. The table structure is essentially free-format with no stringent requirements that data can be input in specific positions within a line. The table structure in MAPS is self-documenting and allows the user to freely insert comments in the data to aid in documentation.

All MAPS output is stored in binary files to allow for report generation and customization at a later date. Among the results stored in binary files are the individual unit quantities on an hourly, monthly, annual, and study period basis for the system and own-load dispatches, and the hourly interface flows. The stored results of the transmission analysis, when MAPS is run in with the detailed electrical representation, include the hourly flows and plant outputs, the limiting elements for each hour and the marginal benefit of relaxing each limiting constraint, and the hourly spot prices at specified buses.

The MAPS Report Analyzer (MRA) is an extremely powerful tool for analyzing the vast quantities of generation- and transmission-related data produced by MAPS. The MRA loads the data from the binary files into a very efficient database and allows the user to easily create customized reports and graphs through the use of built-in commands and a simple programming language.

The MRA is completely menu driven and includes several on-line help function to guide the user. The MRA has several options for plotting study results. The first option is intended to give the user a quick look at the data but does not offer all of the flexibility, such as changing scale divisions or adding text to the graphs, that is sometimes needed. The MRA also contains a separate plotting package that can be used to fine tune the appearance of plots. The third option allows the user to export the data for use with other plotting software.

The following pages show some of the reports and graphs that are readily available from the MRA or can be easily generated from data accessible through the MRA.

Example 1 MRA Unit Edit Table

NO	--NAME--			TYPE	COMPANY	--AREA--	MAX-RTG	CON-RTG	F-O-R	MN-DT	P	TOTAL-GWH	CF	P	FC(k$)	P	OMT(k$)	P	SPMIN	SPMAX
1	Unit-01			THE	Company A	ATCE_AR	36.00	36.00	0.1040	4	0	0.774	0.0024	0	103	0	1.28	0	11.04	39.81
2	Unit-02			THE	Company A	ATCE_AR	37.00	37.00	0.1040	4	0	0.777	0.0024	0	102	0	1.29	0	11.04	39.81
3	Unit-03			THE	Company A	ATCE_AR	46.00	46.00	0.1040	4	0	0.000	0.0000	0	0	0	0.00	0	11.04	39.81
4	Unit-04	0	0	THE	Company A	ATCE_AR	22.00	22.00	0.1040	4	0	0.000	0.0000	0	0	0	0.00	0	11.04	39.81
5	Unit-05	0	0	THE	JOINT	ATCE_AR	838.78	838.78	0.0610	48	0	4105.661	0.5572	0	73479	0	9063.78	0	11.04	39.81
6	Unit-06	0	0	THE	JOINT	ATCE_AR	838.78	838.78	0.0610	48	0	3974.200	0.5394	0	71273	0	8773.56	0	11.04	39.81
7	Unit-07	0	0	THE	Company B	ATCE_AR	84.00	84.00	0.1040	4	0	13.198	0.0179	0	718	0	21.85	0	11.04	39.81
8	Unit-08	0	0	THE	Company B	ATCE_AR	19.00	19.00	0.1040	4	0	0.821	0.0049	0	76	0	1.36	0	11.04	39.81
9	Unit-09	0	0	THE	Company B	ATCE_AR	86.00	86.00	0.0840	48	0	150.891	0.1997	0	5144	0	208.19	0	11.04	39.81
10	Unit-10	0	0	THE	Company B	ATCE_AR	54.00	54.00	0.0980	48	0	0.000	0.0000	0	0	0	0.00	0	11.04	39.81
11	Unit-11	0	0	THE	Company B	ATCE_AR	80.00	80.00	0.0760	48	0	343.647	0.4890	0	6535	0	758.64	0	11.04	39.81
12	Unit-12	0	0	THE	Company B	ATCE_AR	9.00	9.00	0.1040	4	0	0.000	0.0000	0	0	0	0.00	0	11.04	39.81
13	Unit-13	0	0	THE	Company B	ATCE_AR	129.00	129.00	0.0760	48	0	555.595	0.4903	0	10386	0	1226.55	0	11.04	39.81
~~14~~	~~Unit-14~~	~~0~~	~~0~~	~~THE~~	~~Company B~~	~~ATCE_AR~~	~~160.00~~	~~160.00~~	~~0.0760~~	~~48~~	~~0~~	~~699.189~~	~~0.4975~~	~~0~~	~~13058~~	~~0~~	~~1543.55~~	~~0~~	~~11.04~~	~~39.81~~
15	Unit-15	0	0	THE	Company B	ATCE_AR	155.00	155.00	0.0980	48	0	12.013	0.0088	0	653	0	25.46	0	11.04	39.81
16	Unit-16	0	0	THE	JOINT	ATCE_AR	1031.00	1031.00	0.1660	168	0	6268.466	0.6922	0	41312	0	4151.52	0	11.04	39.81
17	Unit-17	0	0	THE	JOINT	ATCE_AR	847.20	847.20	0.0610	48	0	4478.840	0.6019	0	79801	0	9887.49	0	11.04	39.81
18	Unit-18	0	0	THE	JOINT	ATCE_AR	847.20	847.20	0.0610	48	0	4304.070	0.5784	0	76858	0	9501.69	0	11.04	39.81
19	Unit-19	0	0	THE	Company C	ATCE_AR	59.00	59.00	0.1040	4	0	1.304	0.0025	0	175	0	2.16	0	11.04	39.81
20	Unit-20	0	0	THE	Company C	ATCE_AR	20.00	20.00	0.1040	4	0	0.000	0.0000	0	0	0	0.00	0	11.04	39.81
21	Unit-21	0	0	THE	Company C	ATCE_AR	20.00	20.00	0.1040	4	0	0.000	0.0000	0	0	0	0.00	0	11.04	39.81
22	Unit-22	0	0	THE	Company C	ATCE_AR	37.00	37.00	0.1040	4	0	0.000	0.0000	0	0	0	0.00	0	11.04	39.81
23	Unit-23	0	0	THE	Company C	ATCE_AR	20.00	20.00	0.1040	4	0	0.000	0.0000	0	0	0	0.00	0	11.04	39.81
24	Unit-24	0	0	THE	Company C	ATCE_AR	20.00	20.00	0.1040	4	0	0.000	0.0000	0	0	0	0.00	0	11.04	39.81
25	Unit-25	0	0	THE	Company C	ATCE_AR	20.00	20.00	0.1040	4	0	0.000	0.0000	0	0	0	0.00	0	11.04	39.81
26	Unit-26	0	0	THE	JOINT	ATCE_AR	1051.00	1051.00	0.1660	168	0	6390.057	0.6922	0	42114	0	4232.06	0	11.04	39.81
27	Unit-27	0	0	THE	JOINT	ATCE_AR	1035.00	1035.00	0.1660	168	0	6292.781	0.6922	0	41474	0	4167.63	0	11.04	39.81
28	Unit-28	0	0	THE	JOINT	ATCE_AR	1106.00	1106.00	0.1660	168	0	6724.443	0.6922	0	44318	0	4453.52	0	11.04	39.81
29	Unit-29	0	0	THE	JOINT	ATCE_AR	1106.00	1106.00	0.1660	168	0	6724.454	0.6922	0	44319	0	4453.52	0	11.04	39.81
30	Unit-30	0	0	THE	JOINT	ATCE_AR	37.93	37.93	0.1040	4	0	0.000	0.0000	0	0	0	0.00	0	11.04	39.81

NAME	Unit name
TYPE	Unit type
COMPANY	Unit company
AREA	Unit area
MAX-RTG	Maximum rating in MW
CON-RTG	Continuous rating in MW
F-O-R	Forced outage rate
MN-DT	Minimum downtime (hours)

TOTAL-GWH	Annual GWH operation
CF	Capacity Factor
FC (k$)	Fuel Cost
OMT (k$)	Total O&M Cost
SPMIN	Spot price minimum
SPMAX	Spot price maximum
SPAVG	Spot price average

Example 2 MAPS Standard System Report

Year -- 2000
Monthly Summary Table
****

Description	Jan	Feb	Mar	Apr	May	Jun	Jul	Aug	Sep	Oct	Nov	Dec	Ann
SYSTEM													
Thermal Units													
ENERGY (1000s MWh)	22181	21179	19527	17531	19141	21007	26876	24109	19369	19371	20622	23235	254153
REVENUE (1000s $)	447234	448626	387184	376870	404163	435390	716990	550809	416994	415715	426702	474828	5501506
COST (1000s $)	316989	315642	290949	285241	282927	305187	438163	364271	294182	303528	305870	334249	3837198
NET $ (1000s $)	130245	132984	96235	91629	121237	130203	278827	186537	122812	112187	120831	140575	1664308
Hourly Modifiers													
ENERGY (1000s MWh)	0	0	0	0	0	0	0	0	0	0	0	0	0
REVENUE (1000s $)	0	0	0	0	0	0	0	0	0	0	0	0	0
COST (1000s $)	0	0	0	0	0	0	0	0	0	0	0	0	0
~~NET $ (1000s $)~~	~~0~~	~~0~~	~~0~~	~~0~~	~~0~~	~~0~~	~~0~~	~~0~~	~~0~~	~~0~~	~~0~~	~~0~~	~~0~~
Pondage Modifiers													
ENERGY (1000s MWh)	344	401	649	663	536	268	185	142	120	149	351	438	4250
REVENUE (1000s $)	7418	9049	13081	14522	11677	6024	5578	3851	2770	3300	7639	9388	94297
COST (1000s $)	0	0	0	0	0	0	0	0	0	0	0	0	0
NET $ (1000s $)	7418	9049	13081	14522	11677	6024	5578	3851	2770	3300	7639	9388	94297
P.S. Hydro													
GEN EGY (1000s MWh)	68	100	80	171	139	146	199	192	134	173	109	92	1601
REVENUE (1000s $)	1700	2425	1744	4533	3690	3834	6841	5673	3533	4418	2738	2252	43380
PUMP EGY (1000s MWh)	84	157	97	257	177	197	296	250	194	249	154	135	2248
NEG REV (1000s $)	1415	2830	1644	4537	2956	3259	5401	4267	3277	4268	2711	2342	38907
NET EGY (1000s MWh)	-17	-56	-17	-87	-39	-52	-98	-58	-60	-76	-45	-43	-648
NET $ (1000s $)	285	-405	99	-4	734	575	1440	1406	256	150	26	-90	4473
Total Generation													
ENERGY (1000s MWh)	22509	21524	20159	18108	19638	21223	26964	24194	19429	19443	20929	23635	257756
REVENUE (1000s $)	454937	457270	400364	391387	416575	441990	724008	556066	420020	419165	434367	484126	5600276
COST (1000s $)	316989	315642	290949	285241	282927	305187	438163	364271	294182	303528	305870	334249	3837198
NET $ (1000s $)	137948	141629	109415	106146	133648	136802	285845	191795	125838	115637	128497	149877	1763078
Load ENERGY	22509	21523	20159	18108	19638	21223	26964	24193	19429	19444	20929	23634	257754
REVENUE	455881	459494	400553	391454	416700	442119	724056	556358	420166	419184	434573	484156	5604694
Net Gen GWh - Load GWh	0	0	0	0	0	1	0	1	0	0	0	0	2
Net Gen k$ - Load k$	-317933	-317866	-291138	-285308	-283052	05316	38210	-364563	-294328	-303547	-306076	334278	84161
Congestion Cost (k$)	944	2224	189	67	125	129		292	146	19	206	29	4417

Example 3 – Typical Plots Available from MRA

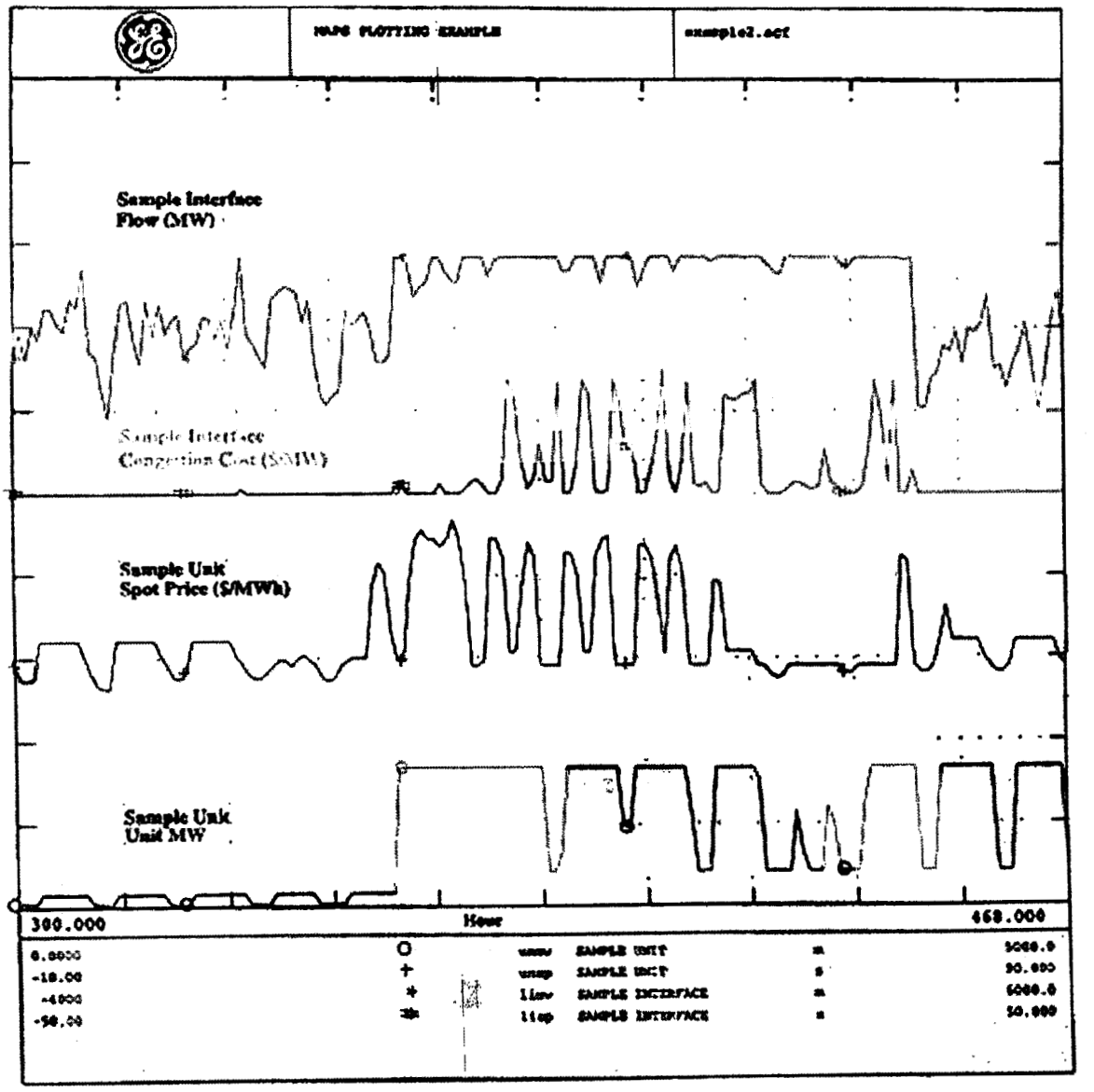

MULTI AREA PRODUCTION SIMULATION PROGRAM
SAMPLE DATA BASE
BASE CASE FROM PUBLIC DATA
Data for the period 1/2000 through 12/2000

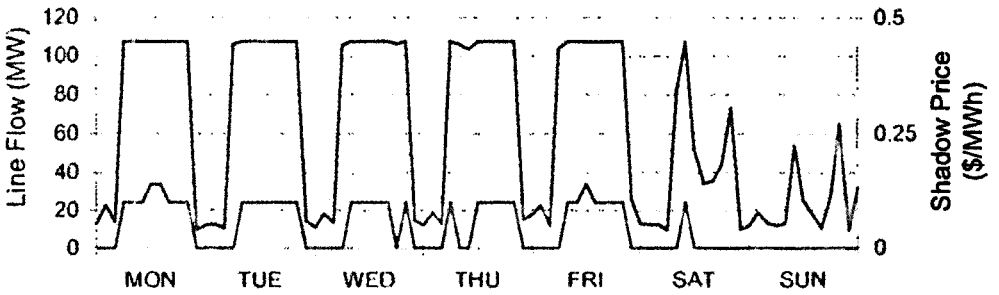

Example 4 – Line Flows and Line Shadow Prices

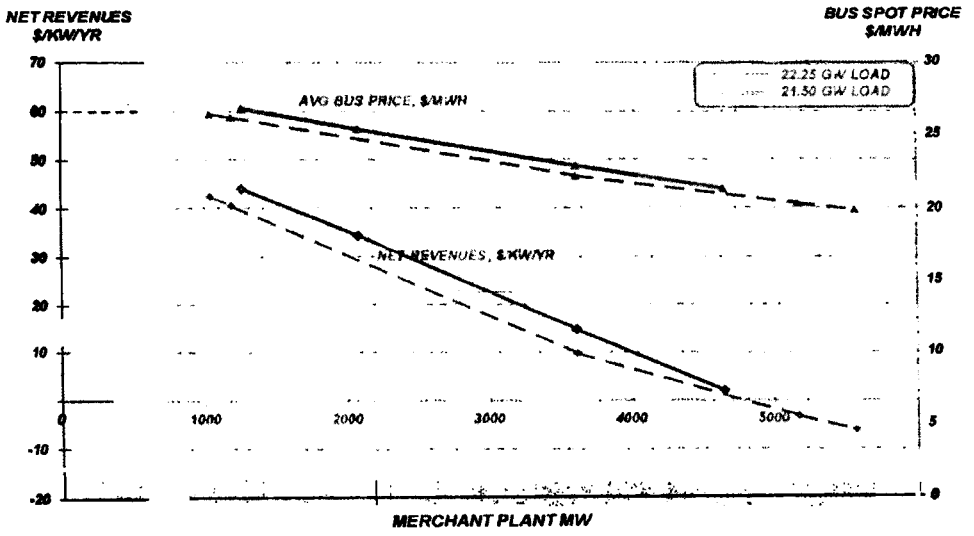

Example 5 – Merchant Plant Net Revenues

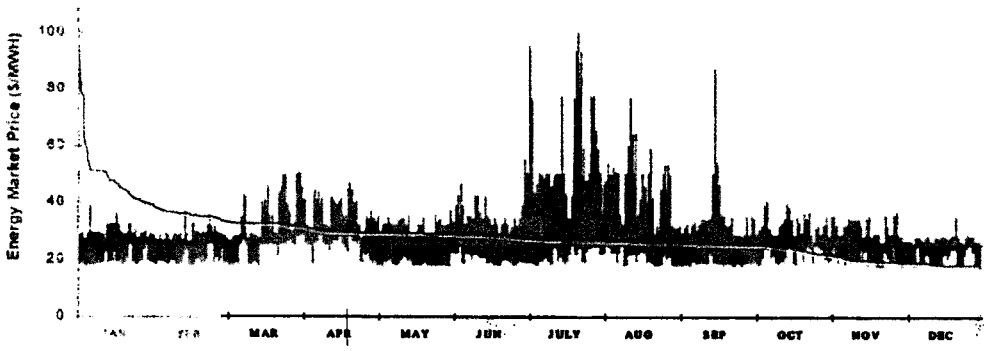

Example 6 – Hourly Market Energy Prices

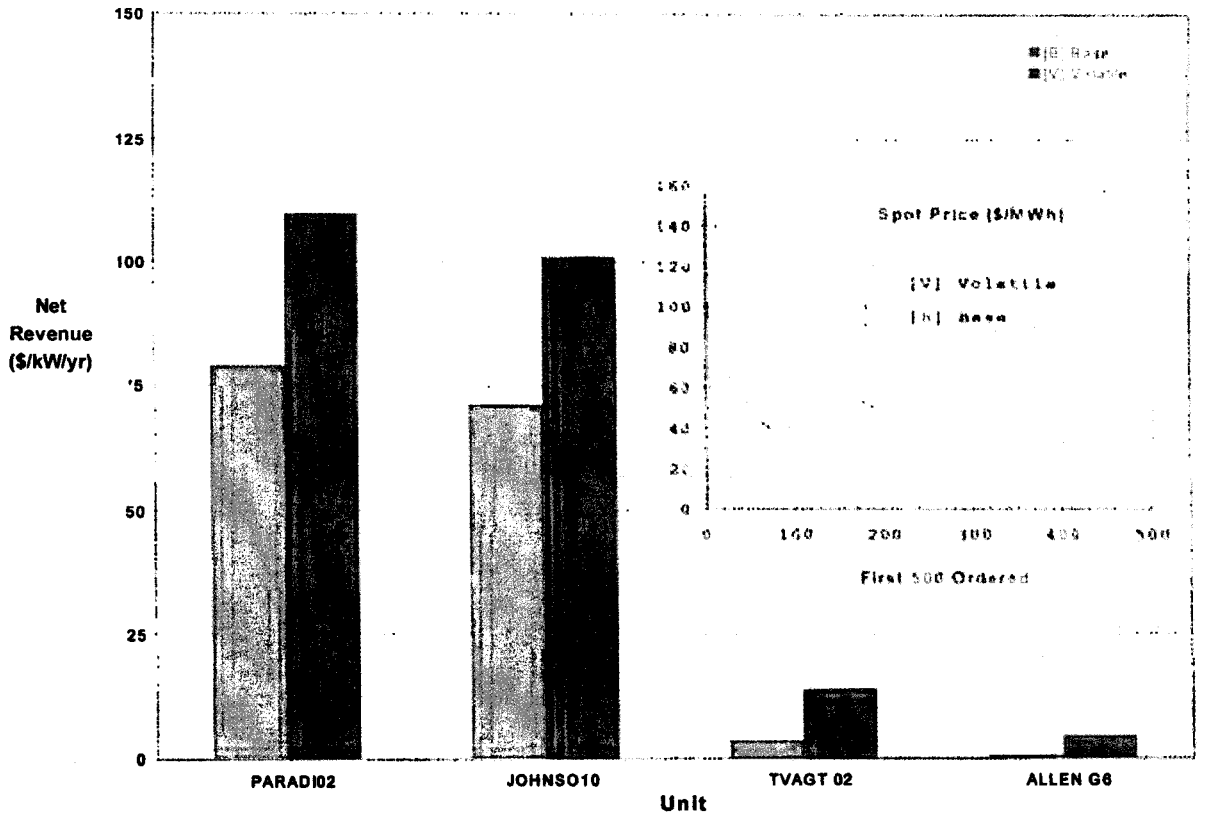

Example 7 - Effect of Market Volatility on Spot Price and Net Revenue

VII. Hardware Specifications for Running MAPS and MRA

	PENTIUM PC
System	Pentium IV 900 MHz 512 MB RAM 40 GB Disk 2 Button Mouse 101 Keys (US) Floppy Disk Drive CD-ROM 56 kB Modem
Monitor	20" Color Display
Backup	CD-Writer
Op Sys	Windows NT, 95, 98, or 2000
Aux Software	Exceed 7.0 from Hummingbird

VIII. MAPS Licensees

A list of current MAPS licensees is available on request.

IX. MAPS Pricing Information

Pricing information for licensing MAPS, MAPS training, and MAPS studies conducted by PSEC personnel is available on request.

X. MAPS Publications

2001

[1] J. Zhu, M. O. Sanford, G. H. Ganoung, D. Moyeda, R. Seeker, "Emissions Control in a Competitive Power Market," IEEE Computer Applications in Power, October 2001.

2000

J. Zhu, G.A. Jordan, S. Ihara, "The Market for Spinning Reserve and its Impact on Energy Prices," IEEE PES Winter Power Meeting, January 2000.

[2] J. Yang, G.A. Jordan, "System Dynamic Index for Market Power Mitigation in the Restructuring Electricity Market," IEEE PES Summer Power Meeting, July 2000.

[3] J. Bastian, J. Zhu, V. Banunarayanan, M.O. Sanford, G.A. Jordan, "Forecasting Locational Marginal Prices in a US ISO," CIGRE 2000 Session, Paris, France, August 2000.

1999

[1] J. Bastian, J. Zhu, V. Banunarayanan, R. Mukerji, "Forecasting Energy Prices in a Competitive Market," IEEE Computer Applications in Power, July 1999.

1998

[1] R. Mukerji, "GE MAPS Model – Market Assessment and Portfolio Strategies," IBC Conference on Market Price Forecasting, March 1998.

[2] R. Mukerji, "Market Price Forecasting," IBC Conference on Merchant Power Plants in the New US Market, June 1998.

1997

[1] I. Shavel, R. Mukerji, "Valuing Energy Projects in a Deregulated Environment," IBC Conference on Purchased Power Contracts, Washington, D.C., January 27-28, 1997.

[2] R. Mukerji, J.L. Oplinger, "Valuation of Energy Projects in a Deregulated Environment," Pennsylvania Electric Association Conference, State College PA, May, 1997.

1996

N.W. Miller, R. Mukerji, R.E. Clayton, "The Role of Power Electronics in Open Access Markets," EPRI Conference on the Future of Power Delivery, Washington, D.C., April 9-11, 1996.

S.L. Pope, M.D. Cadwalader, R. Mukerji, "Forecasting the Market Price of Electricity for Stranded Investment Calculations," IBC Conference on Stranded Costs, Washington, D.C., June 19-21, 1996.

[3] R. Mukerji, J. Hajagos, C. Dahl, K.D. Rogers, M. Gopinathan, D. Eyre, "Transmission Constrained Production Simulation - A Key Tool in the De-Regulated Utility Environment," CIGRE 1996 Session, Paris, France, 1996.

[4] R.E. Clayton, R. Mukerji, "System Planning Tools for the Competitive Market," IEEE Computer Applications in Power, July 1996.

1995

[1] R. Mukerji, G.A. Jordan, R. Clayton, G.A. Haringa, "Computation of Spot Prices and Congestion Costs in Large Interconnected Power Systems," American Power Conference, Chicago, IL, April 18-20, 1995.

1994

[1] J. Apperson, R. Mukerji, "Transmission Oriented Production Simulation for Regional Planning," Transmission Planning and Pricing Conference, Denver, Colorado, November 10-11, 1994.

[2] R. Mukerji, S. Ellis, L.L. Garver, N.W. Simons, "Analytic Tools for Evaluating Transmission Access Issues," American Power Conference, Chicago, IL, April 1994.

[3] R. Mukerji, T.F. Godart, N.W. Simons, D. Powell, J. Hajagos, A. Madsen, "Automation and Integration of the Power System Planning Process," CIGRE 1994 Session, Paris, France, 1994.

1993

[1] N.W. Simons, L.L. Garver, R. Mukerji, "Transmission Constrained Production Costing: A Key to Pricing Transmission Access," Public Utilities Fortnightly, Feb. 1, 1993.

[2] T.F. Godart, R. Mukerji, "Advanced Software Integration for Power System Planning," EPRI International Conference on Expert Systems Applications for Electric Power Industry, Phoenix, Arizona, 1993.

[3] R. Mukerji, N.W. Simons, L.L. Garver, "Pricing Transmission Access." PCEA Engineering and Operating Conference, Irvine, California, March 1993.

1992

[1] R. Mukerji, W. Neugebauer, R.P. Ludorf, A. Catelli, "Evaluation of Wheeling and Non-Utility Generation (NUG) Options Using Optimal Power Flows," IEEE-T-PWRS, Feb. 1992, pp. 201-207

[2] N.W. Simons, L.L. Garver, R. Mukerji, "Quantification of the Economic Consequences of Loop Flows," Electric Systems Planning and Operations Conference, Denver, Colorado, Nov. 5-6, 1992.

1991

[1] L.L. Garver, R. Mukerji, N.W. Simons, "Spot Pricing and Megawatt-Miles: Two Pricing Mechanisms," The 2nd Annual Transmission and Wheeling Conference, Denver, Colorado, Nov. 21-22, 1991.

[2] M. Gopinathan, K.D. Rogers, W. Stillinger, D.A. Keegan, G.A. Jordan, "Determination of Transmission Interface Transfer Limits," Proceedings of the American Power Conference, Vol. 53-I, 1991, pp. 576-581.

1990

[1] L.L. Garver, G.A. Jordan, D.A. Keegan, N.W. Simons, "The Integrated Effects of Generation and Transmission on Annual Production Costs," EPRI Conference on Applications of Power Production Simulation, Washington, DC, June 11-13, 1990.

1989

[1] R.C. Degeneff, R.P. Felak, L.L. Garver, G.A. Jordan, edited by Earl Hazan, "Analysis of Wheeling Costs Shows Impact on System," Transmission and Distribution, Vol. 41, No. 3, March 1989.

[2] L.L. Garver, G.A. Jordan, and H.G. Stoll, "Production Simulation," Chapters 12 and 13, and "Generation Planning," Chapter 14 in Least Cost Electric Utility Planning, edited by H.G. Stoll, published by John Wiley & Sons, New York, 1989.

1988

[1] R.C. Degeneff, R.P. Felak, L.L. Garver, G.A. Jordan, "The Integrated Effect of Wheeling on Total System Production Costs," Proceedings of the Sixth NARUC Biennial Regulatory Information Conference, Columbus, Ohio, September 15, 1988, Vol. II, pp. 755-766.

[2] R.C. Degeneff, R.P. Felak, L.L. Garver, G.A. Jordan, "The Integrated Effect of Phase Angle Regulators on Production Costs of Two Pools," presented at the Fall 1988 Meeting of the Pennsylvania Electric Association System Planning Committee, Hershey, Pennsylvania, September 20, 1988.

1987

[1] C. Saylor, J.E. Scheiderich, G.A. Jordan, L.L. Garver, R.C. Degeneff, "The Effects of Transmission Losses on Multi-Area Production Costs," Proceedings of the American Power Conference, Vol. 49, 1987.

[2] G.A. Jordan, L.L. Garver, R.C. Degeneff, R.M. Sigley, "Transmission Constraints Can Cut Energy-Import Savings," Electrical World, Vol. 201, No. 7, July 1987, pp. 37-38

1986

[1] G.A. Jordan, L.L. Garver, R.C. Degeneff, R.M. Sigley, "Evaluating Energy Imports with Multi-Area Production Simulation," presented at the Minnesota Power Systems Conference, Minneapolis, MN, October 7, 1986.

[2] G.A. Jordan, L.L. Garver, R.C. Degeneff, "Using a Production Simulation Program to Evaluate the Effects of Transmission Limits on HVDC Imports," presented at the IEEE Montech Conference on HVDC Power Transmission, Montreal, Quebec, Canada, September 29, 1986

C

Appendix C

Phoenix-Area Power Flows

APS-Phoenix Nomogram w/o Limits
January - December 2003

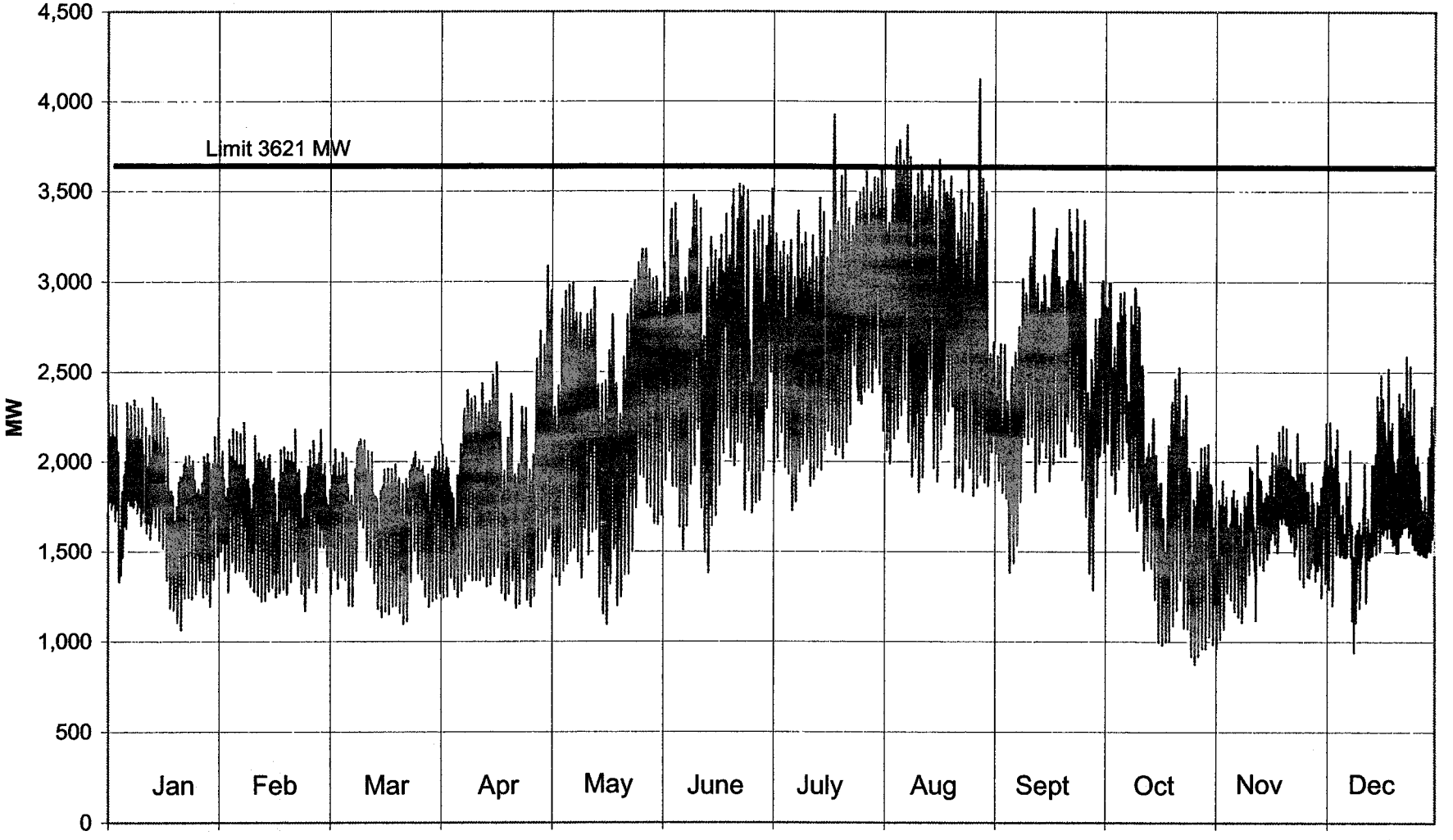

APS-Phoenix Import w/o Limits
June - September 2003

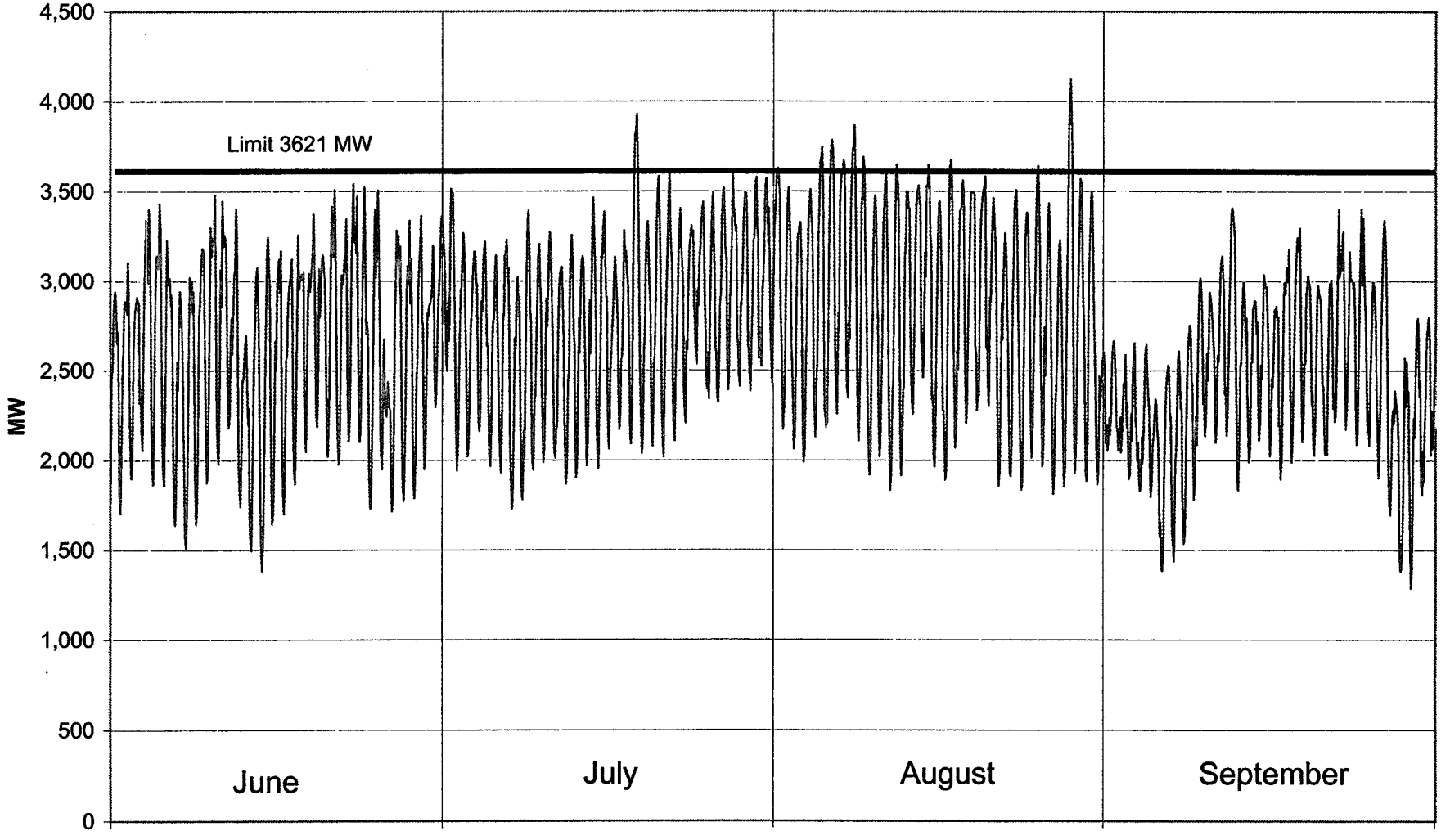

APS-Phoenix Import w/o Limits
June - September 2004

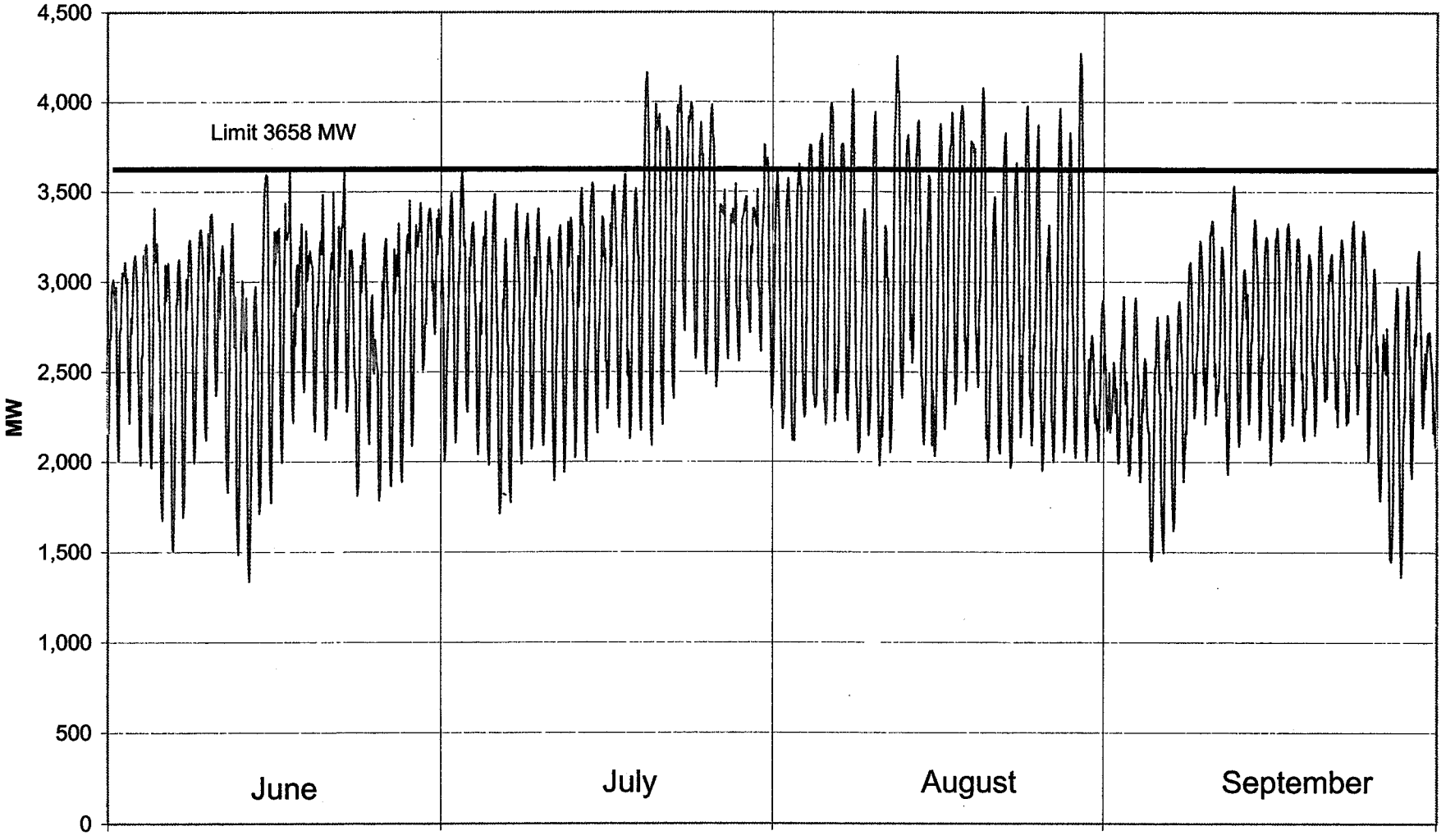

APS-Phoenix Import w/o Limits
June - September 2005

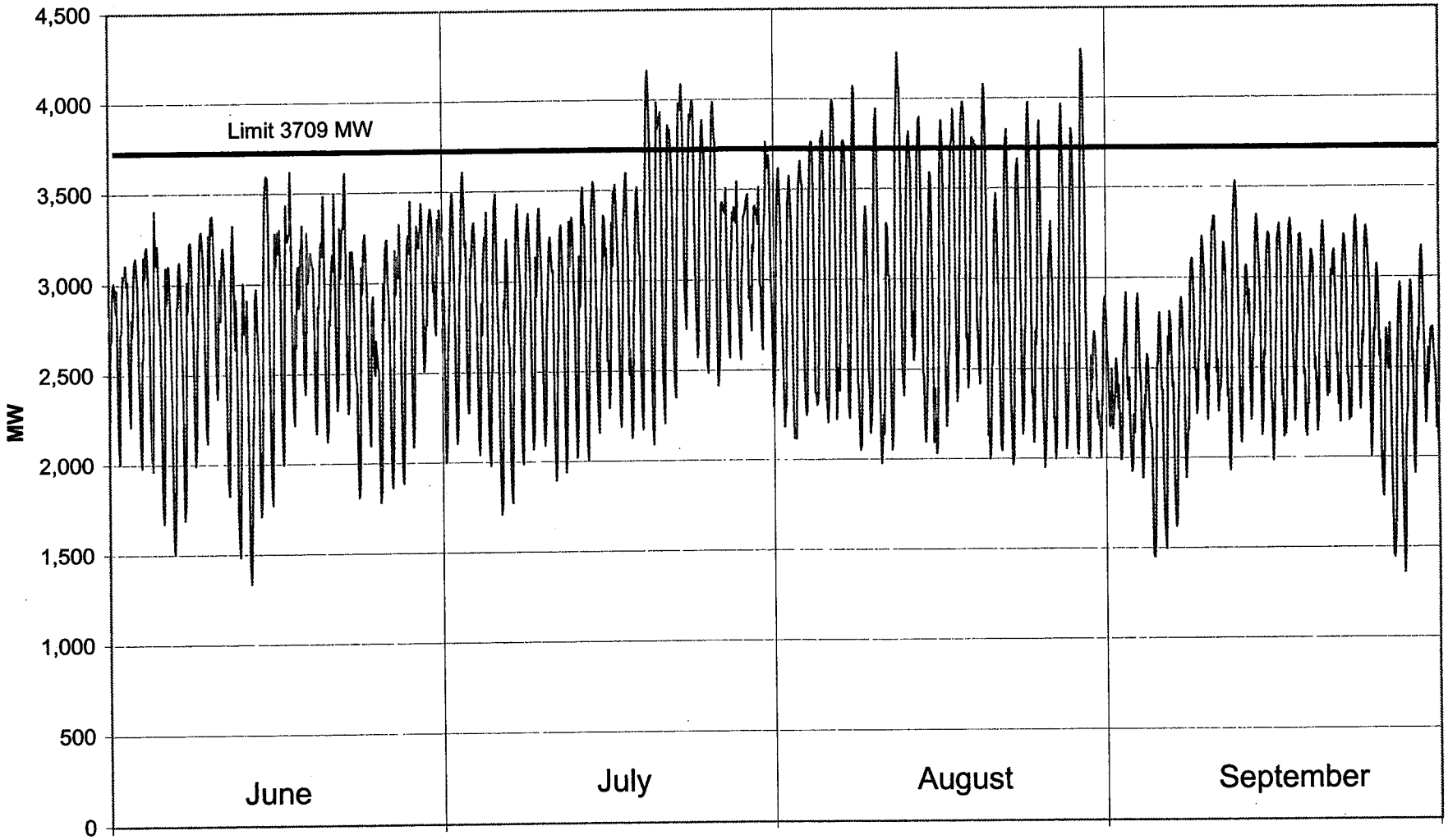

APS-Phoenix Import with Limits
June - September 2005

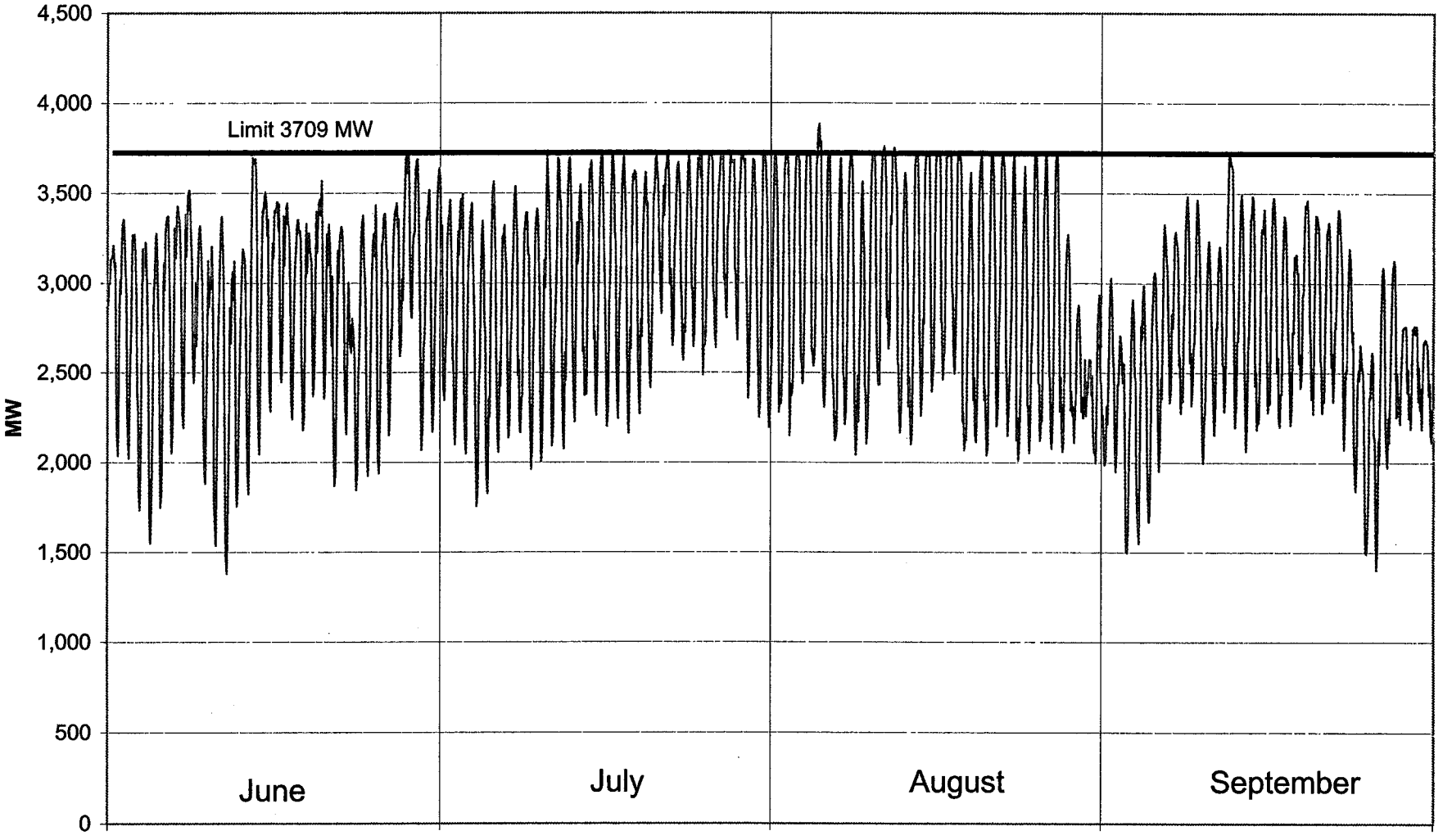

Total Phoenix Import
Actual January - December 2002

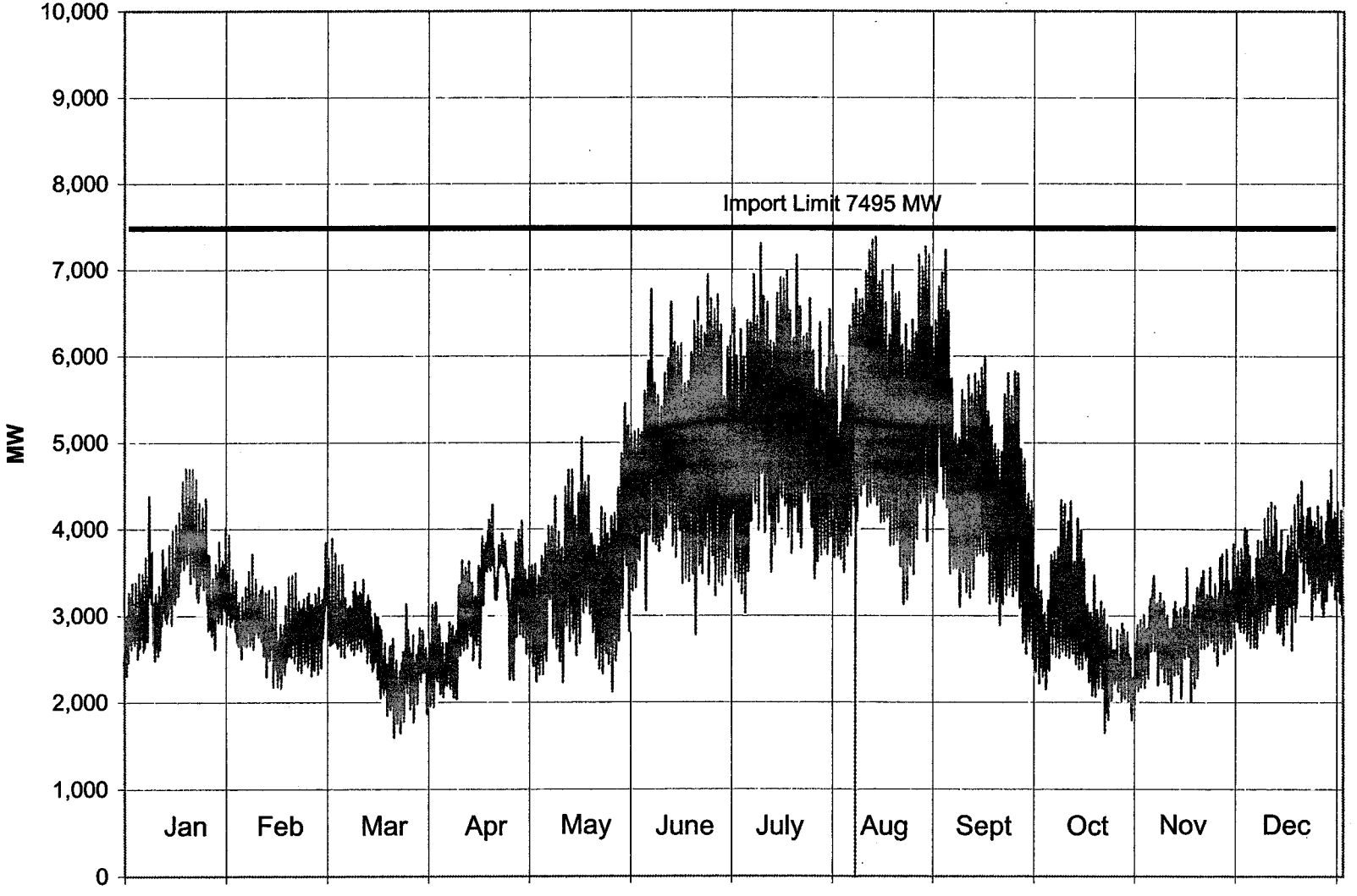

Total Phoenix Nomogram w/o Limits
January - December 2003

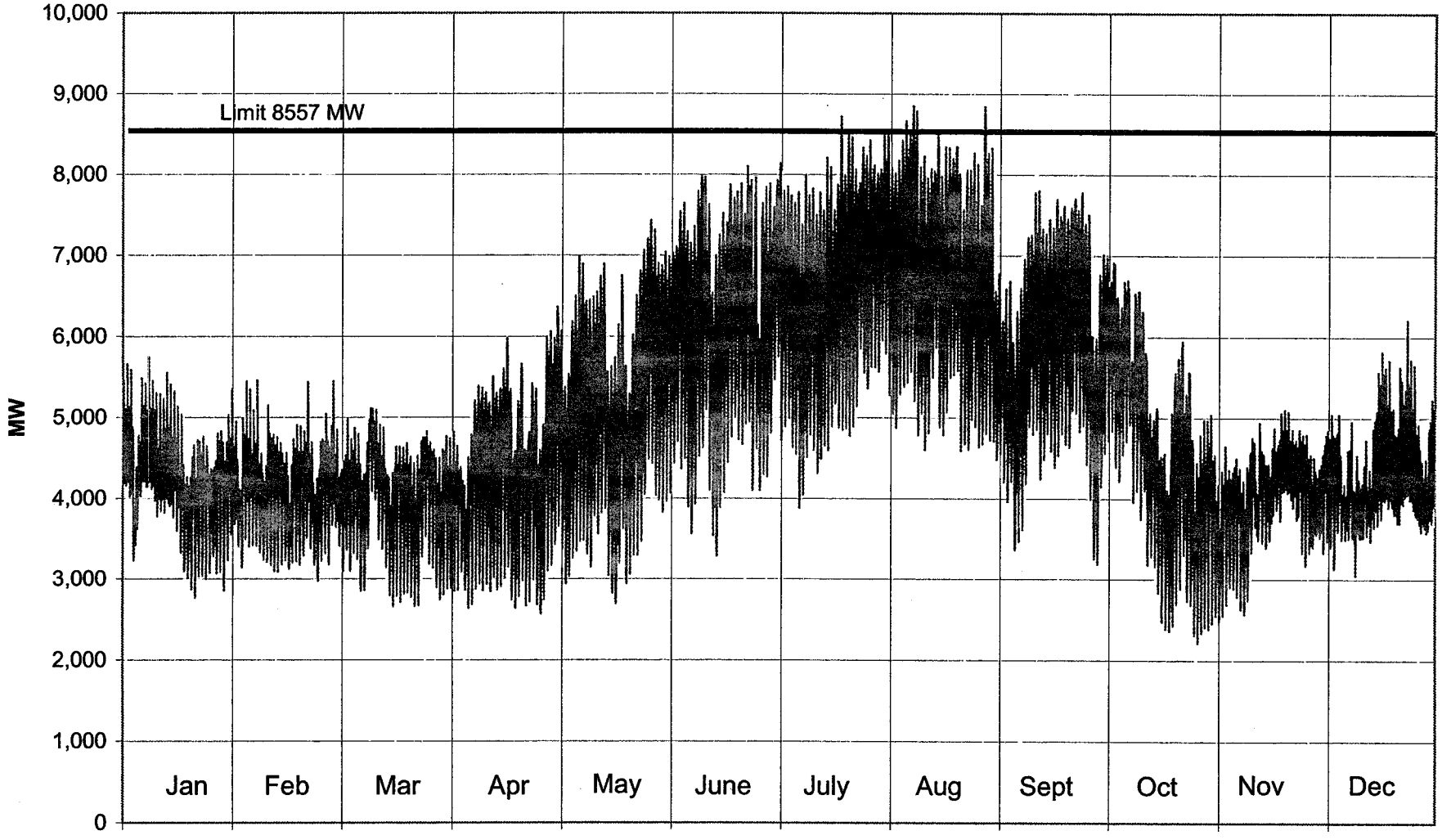

Total Phoenix Nomogram w/o Limits
June - September 2003

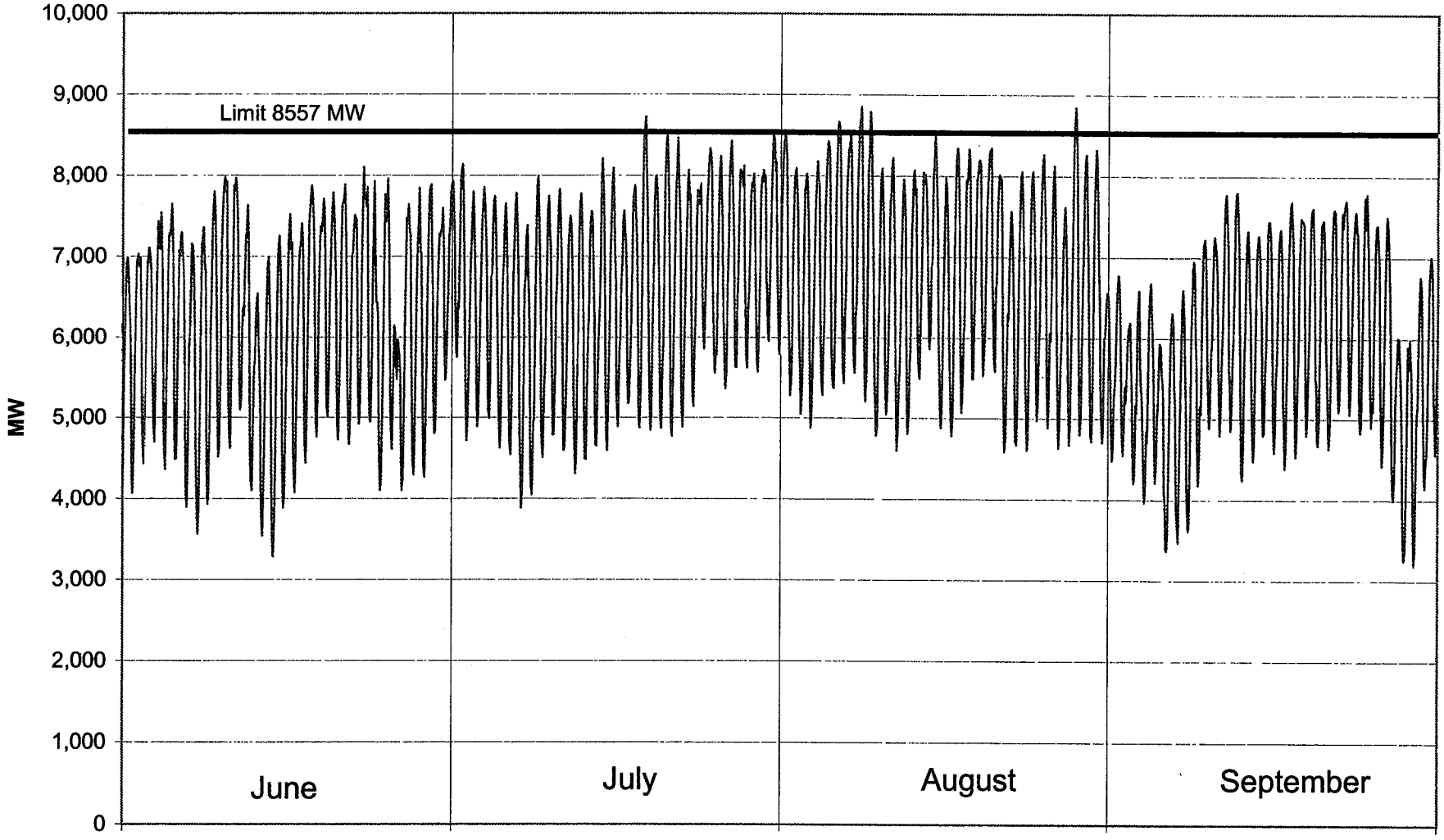

Total Phoenix Import w/o Limits
June - September 2004

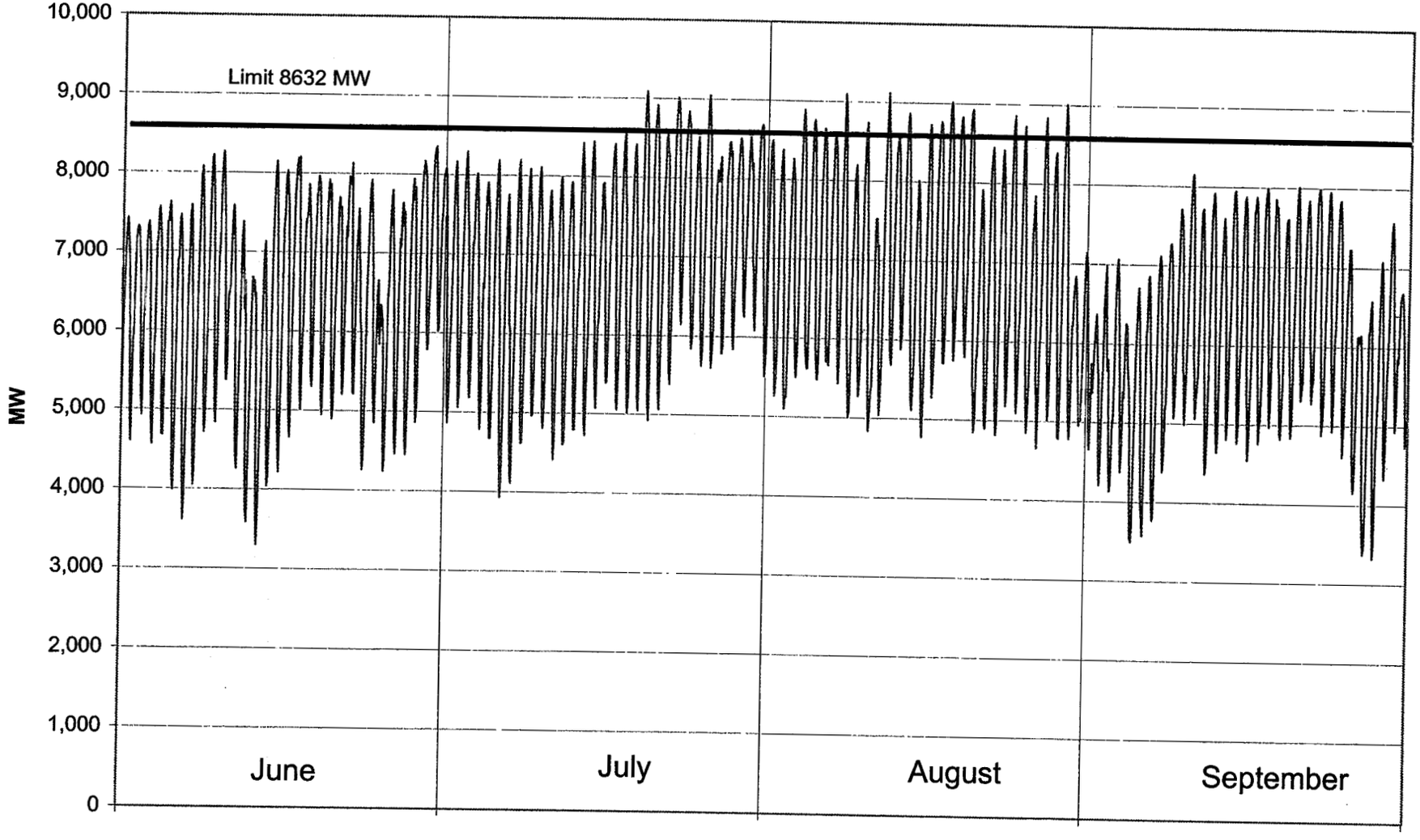

Total Phoenix Import w/o Limits
June - September 2005

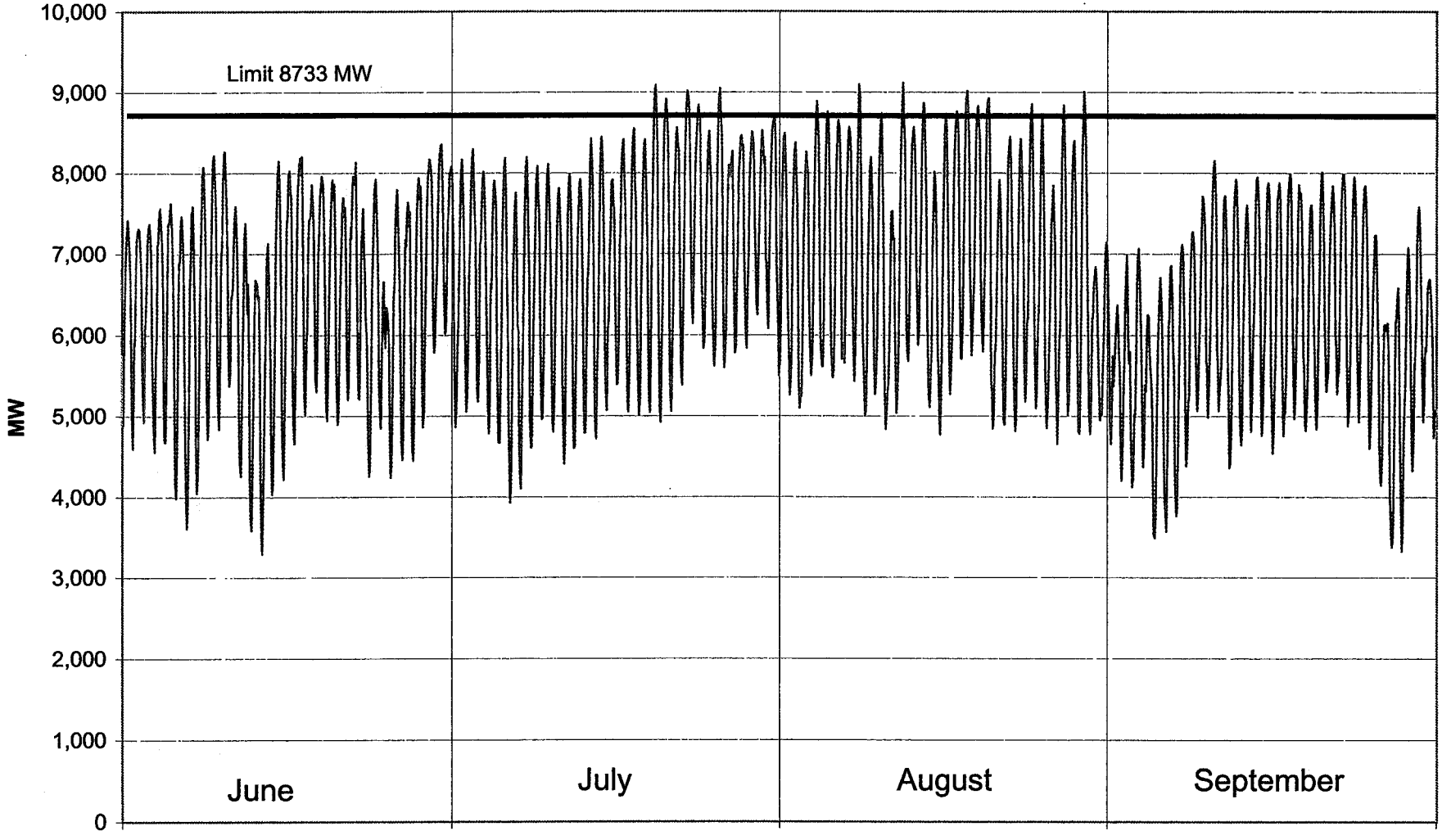

Total Phoenix Import with Limits
June - September 2005

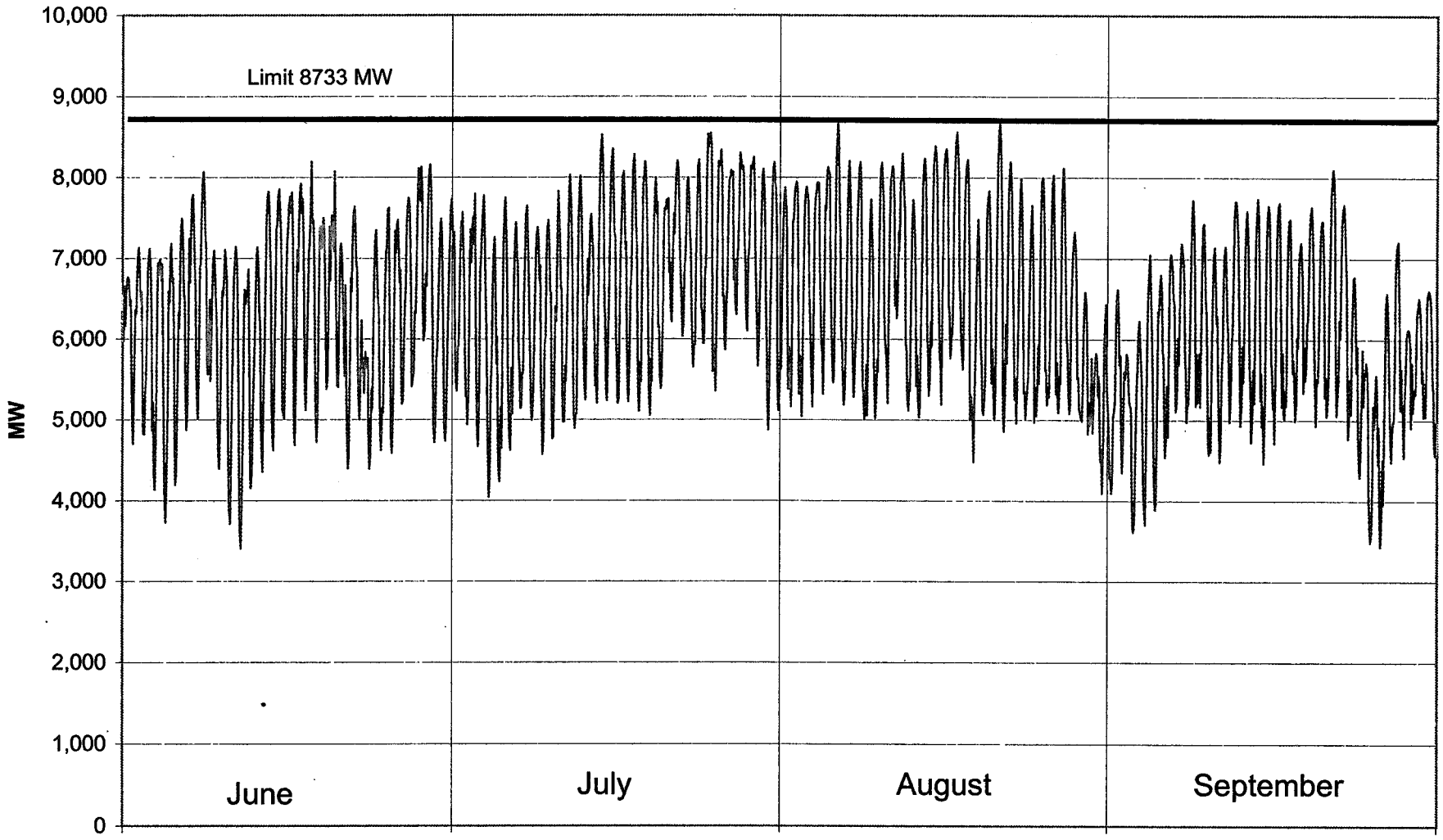

D

Appendix D

Yuma-Area Power Flows

Yuma Import Without Limits
January - December 2003

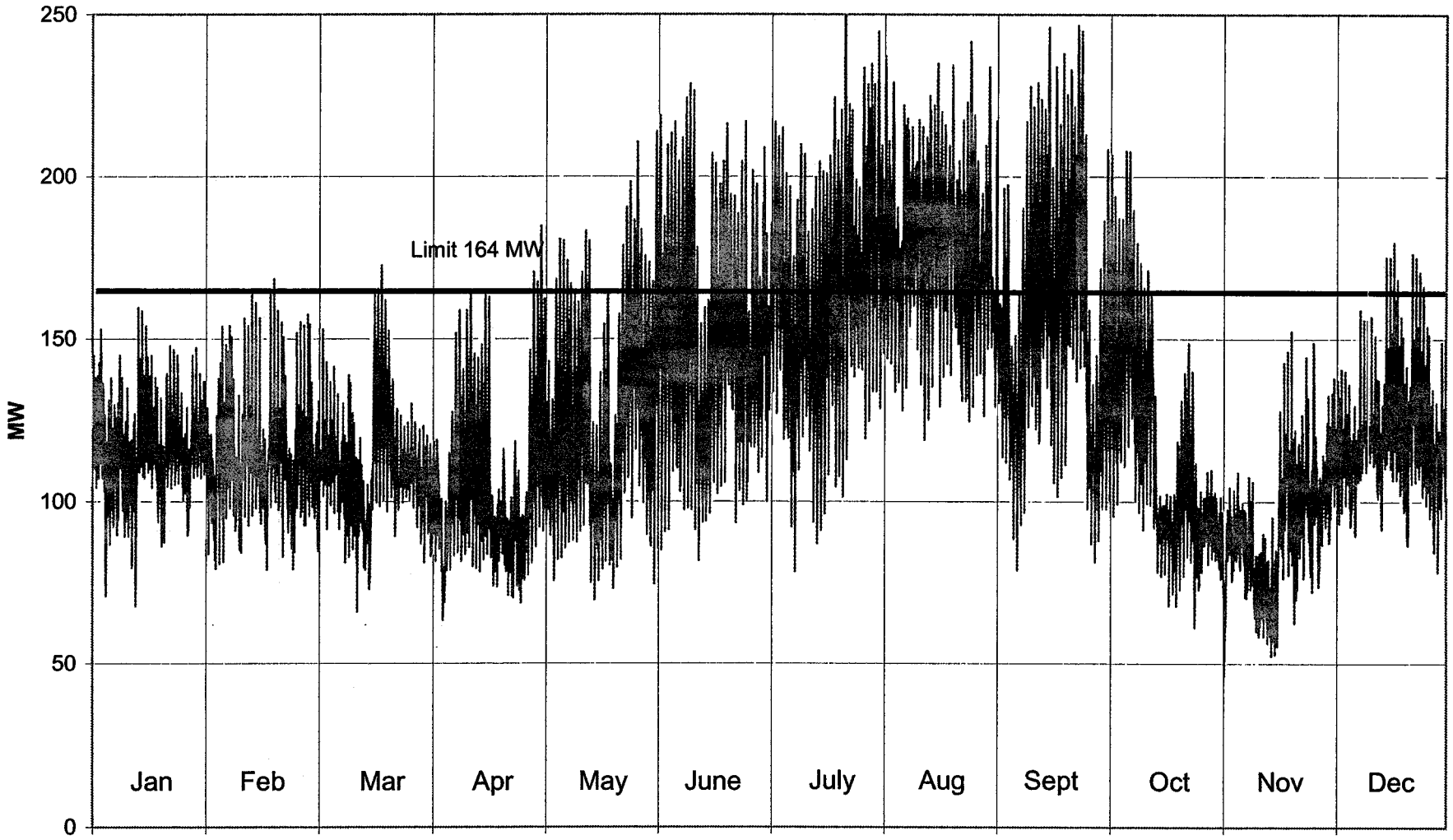

Yuma Import Without Limits
January - December 2004

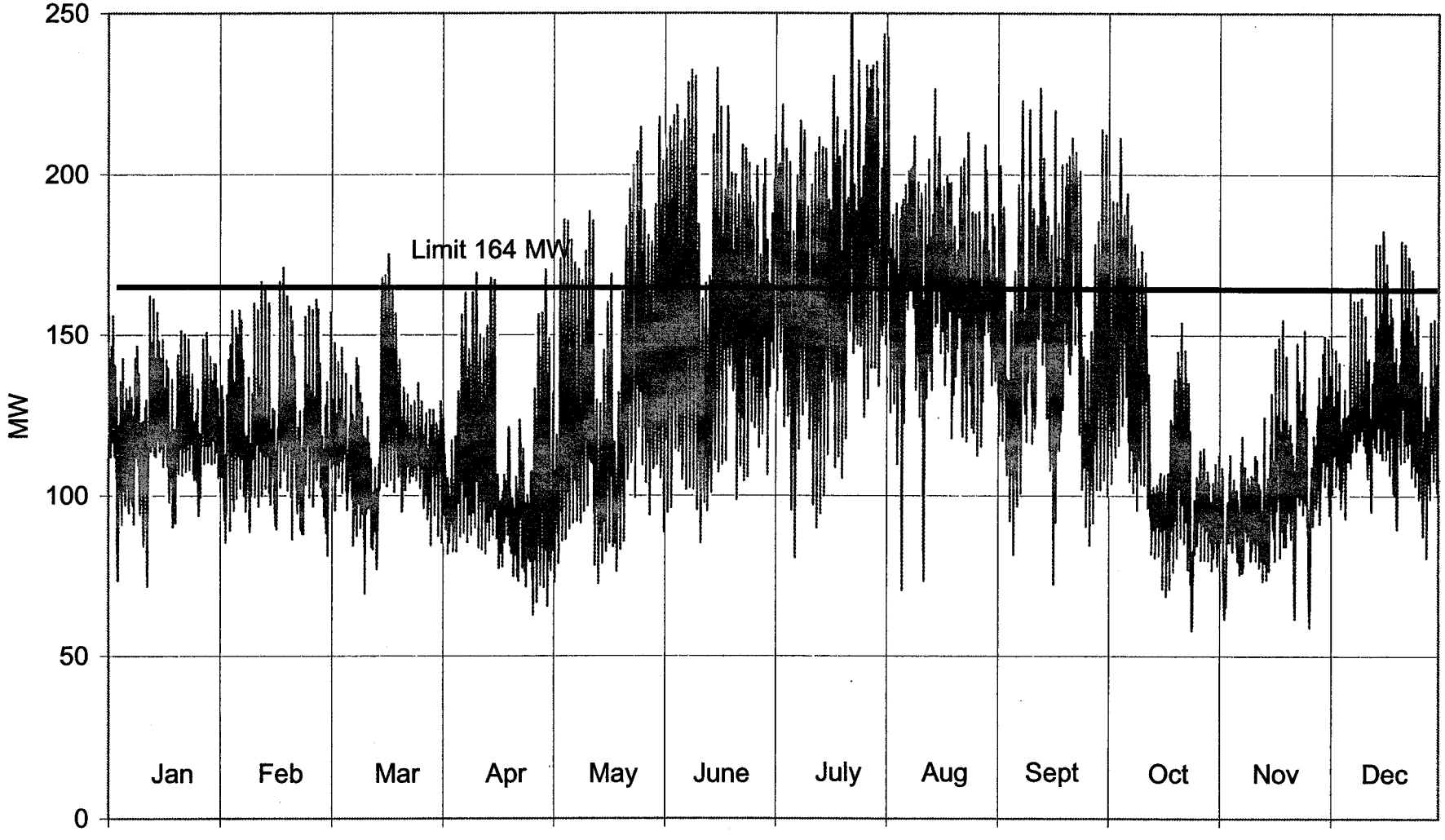

Yuma Import Without Limits
January - December 2005

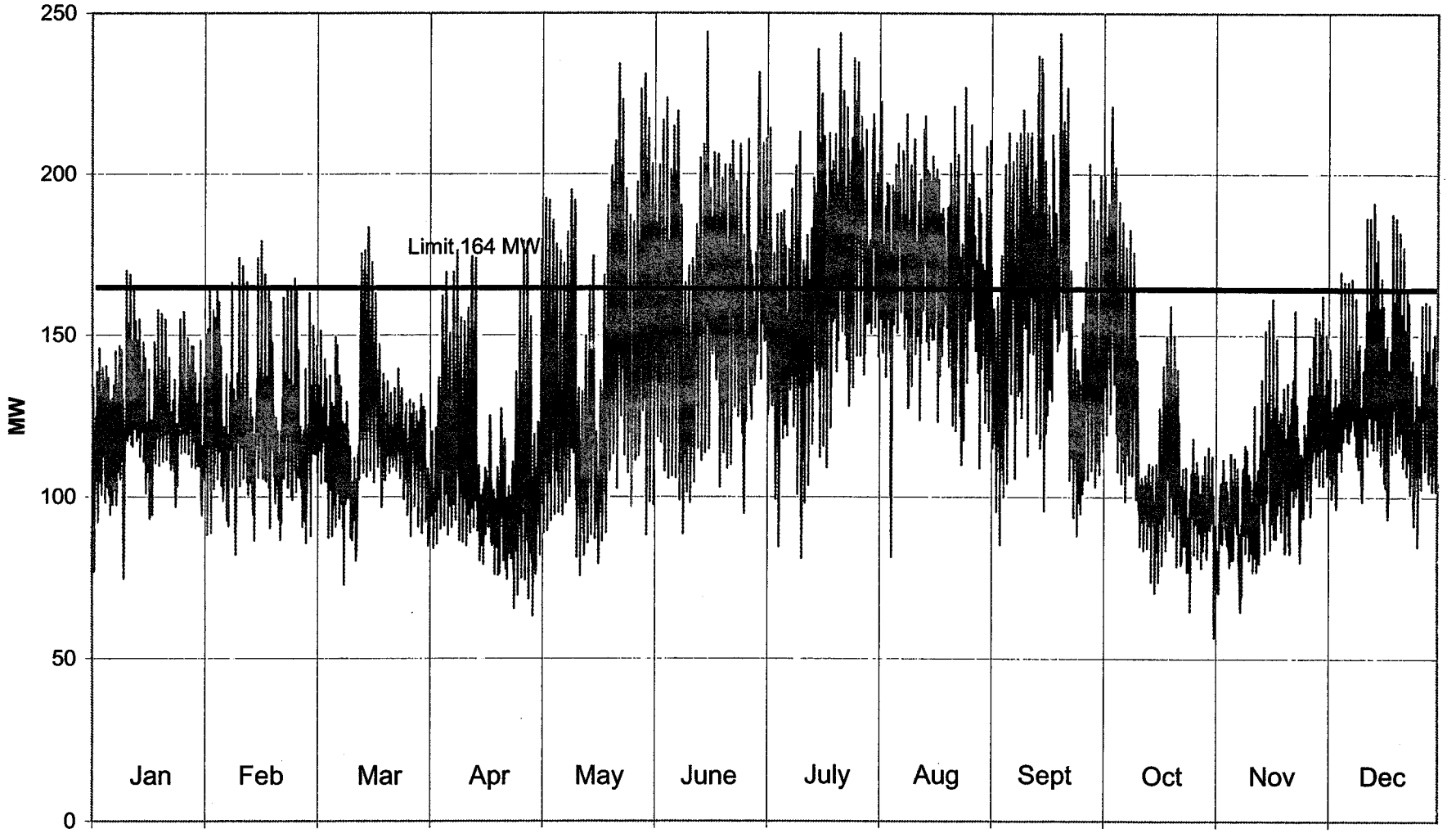

Yuma Import with Limits
January - December 2003

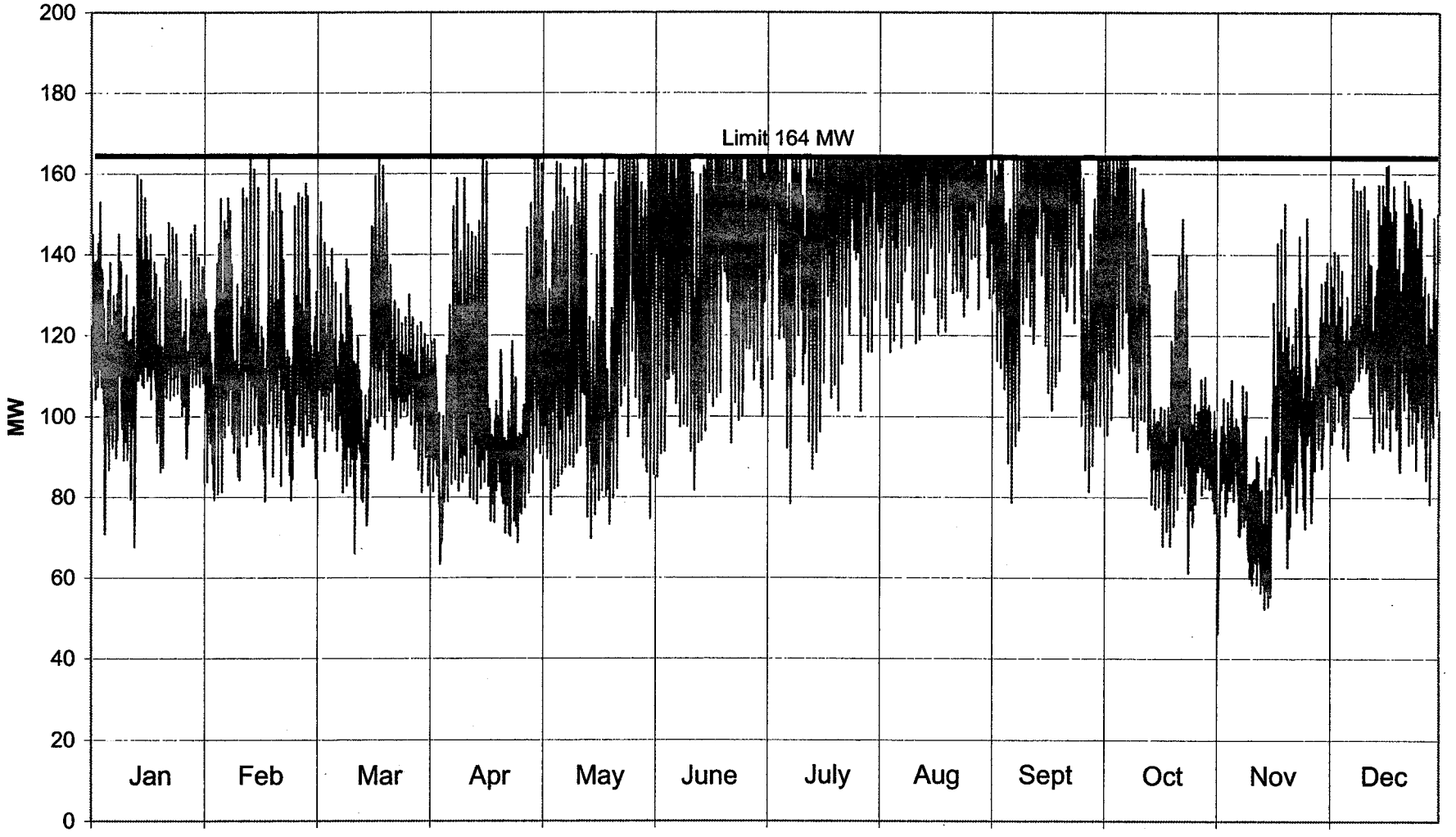

Yuma Import with Limits
January - December 2004

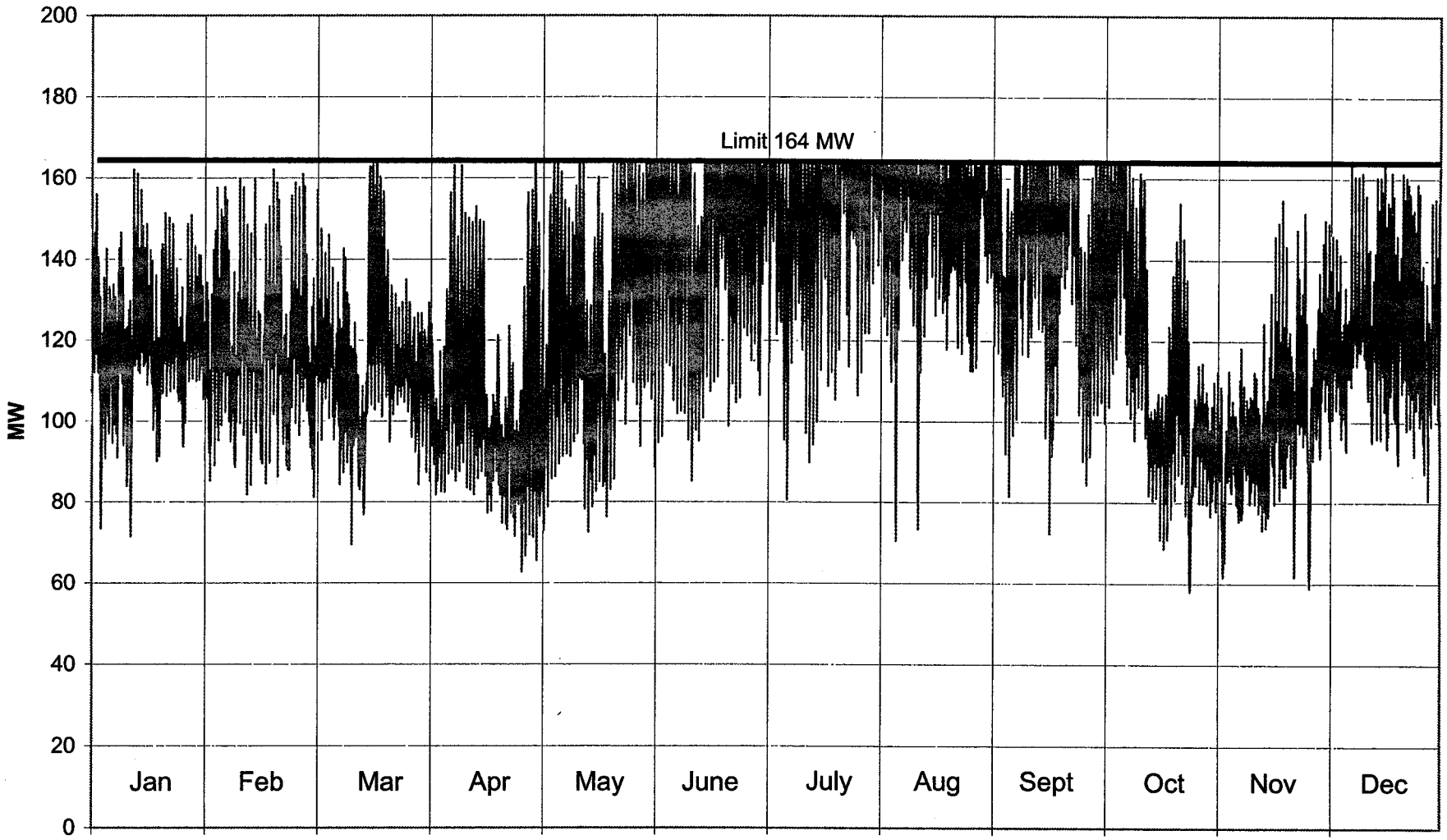

Yuma Import with Limits
January - December 2005

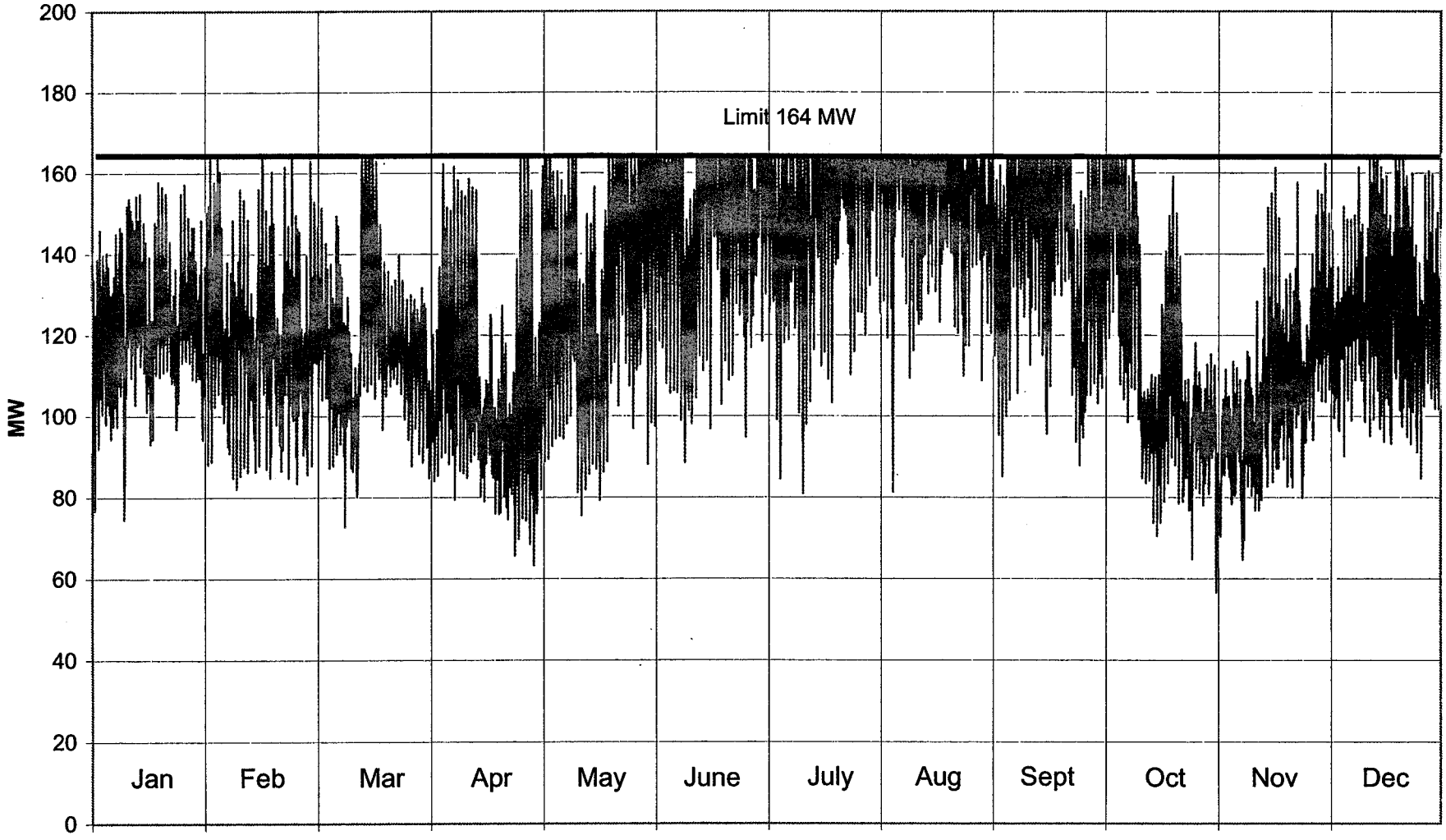

ARIZONA PUBLIC SERVICE COMPANY

APS

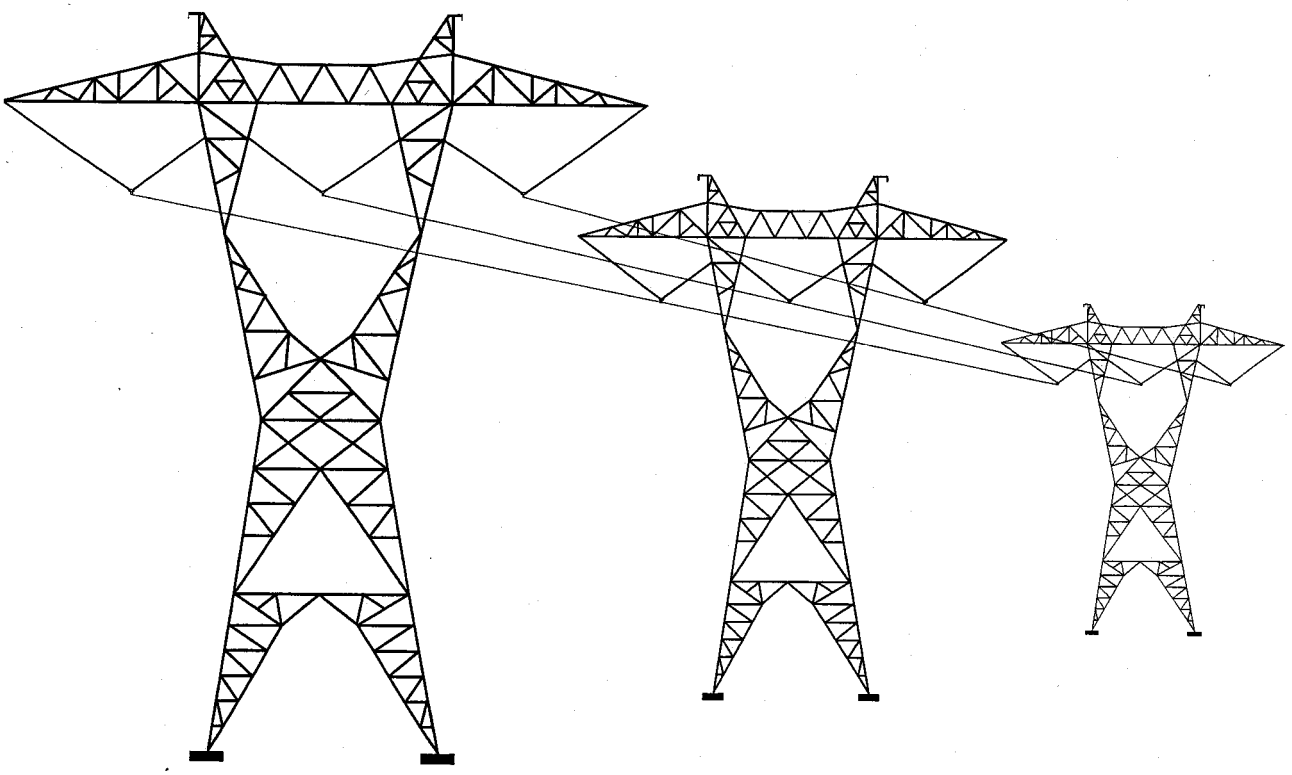

2003 - 2012
TEN-YEAR PLAN

January 2003