APS
A subsidiary of Pinnacle West Capital Corporation

ORIGINAL

0000007771

Steven M. Wheeler
Executive Vice President
Customer Service & Regulation

RECEIVED

2004 JAN 30 P 2: 37

AZ CORP COMMISSION
DOCUMENT CONTROL

January 30, 2004

HAND DELIVERED

Arizona Corporation Commission
DOCKETED

JAN 3 0 2004

DOCKETED BY

Ernest Johnson
Director, Utilities Division
ARIZONA CORPORATION COMMISSION
1200 West Washington Street
Phoenix, Arizona 85007

RE: 10-Year Plan And Related Studies
Docket No. E-00000D-03-0047

Dear Mr. Johnson:

In compliance with A.R.S. § 40-360.02 and pursuant to Arizona Corporation Commission ("Commission") Decision Nos. 63876 (July 25, 2001) and 65154 (September 10, 2002), enclosed please find Arizona Public Service Company's ("APS" or "Company") 2004-2013 Ten-Year Plan for major transmission facilities, along with associated system studies, system ratings, and also the Company's Reliability Must Run Report for 2004-2013.

The 2004-2013 Ten-Year Plan describes planned transmission lines of 115 kV or higher that APS may construct over the next 10 years. This Ten-Year Plan includes approximately 205 miles of new 500 kV transmission lines, 194 miles of new 230 kV transmission lines, and 14 new bulk transformers. The total investment needed to construct these projects is currently estimated to exceed $1.1 billion. When completed, these projects are expected to add approximately 2,000 MW of additional Extra-High Voltage scheduling capability, as well as 2,500 MW of import capability into the Metropolitan Phoenix Area and 250 MW of import capability into Yuma.

These new transmission projects, coupled with additional distribution and sub-transmission investments, will support reliable power delivery in both APS' service area and in the Western United States. However, the Ten-Year Plan, as well as other APS reliability-related infrastructure investments, is premised on a number of assumptions concerning the Company's future financial condition, the regulatory treatment of such investments by the Commission and the Federal Energy Regulatory Commission, other state and federal policies affecting transmission, and, of course, APS' ability to finance large investments of this nature on commercially-reasonable terms.

Arizona Public Service Company P.O. Box 53999 MS 9040 Phoenix, AZ 85072-3999 Ph: 602-250-3982 Fax: 602-250-2367 e-mail: *steve.wheeler@aps.com*

Please contact me if you have any questions or desire additional information concerning this filing.

Sincerely,

Steven M. Wheeler

SMW:DN
Enclosures
cc/encl: Docket Control (Original, plus 13 copies)
Commissioner Marc Spitzer, Chairman
Commissioner Bill Mundell
Commissioner Jeff Hatch-Miller
Commissioner Mike Gleason
Commissioner Kristin Mayes
Laurie Woodall, Assistant Attorney General

ARIZONA PUBLIC SERVICE COMPANY
2004–2013
TEN-YEAR PLAN

Prepared for the

Arizona Corporation Commission

January 2004

ARIZONA PUBLIC SERVICE COMPANY
2004 - 2013
TEN-YEAR PLAN

CONTENTS

GENERAL INFORMATION 1

PLANNED TRANSMISSION MAPS

Arizona EHV and Outer Divisions 6

Phoenix Metropolitan (West) area 7

Phoenix Metropolitan (East) area 8

PLANNED TRANSMISSION DESCRIPTIONS

Gavilan Peak loop-in of Pinnacle Peak-Prescott 230-kV line (2005) 9

Rudd-TS3-TS4 230-kV line (2006) 10

Flagstaff 345/69-kV Interconnection (2006) 11

Hassayampa-Jojoba-Pinal West 500-kV line (2006) 12

Pinal West-Santa Rosa-Browning 500-kV line (2007 & 2011) 13

Palo Verde-TS5 500-kV line (2007) 14

TS5-TS1 230-kV line (2007) 15

TS3-TS2-TS1 230-kV line (2008) 16

Raceway-Avery 230-kV line (2008) 17

Pinnacle Peak-TS6-Avery 230-kV lines (2009) 18

Second Knoll loop-in of Coronado-Silver King 500-kV line (2009) 19

Raceway loop-in of Navajo-Westwing 500-kV line (2010) 20

TS5-Raceway 500-kV line (2010) 21

Westwing-Raceway 230-kV line (2010) 22

Gila Bend-TS8 230-kV line (2012) 23

Westwing-El Sol 230-kV line (2013) 24

Mazatzal loop-in of Cholla-Pinnacle Peak 345-kV line (TBD) 25

Palo Verde-Pinal West-Saguaro 500-kV line (TBD) 26

ARIZONA PUBLIC SERVICE COMPANY
2004–2013
TEN-YEAR PLAN

GENERAL INFORMATION

Pursuant to A.R.S. § 40-360.02, Arizona Public Service Company ("APS") submits its 2004-2013 Ten-Year Plan. Additionally, pursuant to Arizona Corporation Commission ("Commission") Decision No. 63876 (July 25, 2001) concerning the first Biennial Transmission Assessment, APS is including with this filing its Transmission Planning Process and Guidelines and maps showing system ratings on APS' transmission system. The Transmission Planning Process and Guidelines outline generally APS' internal planning for its high voltage and extra-high voltage transmission system, including a discussion of APS' planning methodology, planning assumptions, and its guidelines for system performance. The system ratings maps show emergency and continuous system ratings on APS' extra-high voltage system, and on its Metro, Northern, and Southern 230 kV systems.

This 2004–2013 Ten-Year Plan describes planned transmission lines of 115 kV or higher voltage that APS may construct over the next ten-year period. Pursuant to A.R.S. § 40-360(10), underground facilities are not included. There are approximately 205 miles of 500-kV transmission line, 194 miles of 230-kV transmission line, and 14 bulk transformers contained in the projects in this Ten-Year Plan filing. The total investment for the projects, as they are modeled in this filing, is estimated to be in excess of $1.115 billion and the projects will add 2000 MW of additional EHV scheduling capability, 2500 MW of import capability into the Phoenix area, and 247 MW of import capability into the Yuma area. The following table shows a breakdown of the projects contained in this Ten-Year Plan.

	Projects in Ten-Year Plan
500-kV transmission line	205 miles
230-kV transmission line	194 miles
Bulk Transformers	14
Total Investment	$1.115 billion
EHV Scheduling Capability	+2000 MW (+20 %)[1]
Total Phoenix Area Import	+2500 MW (+29 %)[1]
Yuma Area Import	+247 MW (+151 %)[1]

[1] Based on 2003 values.

Also, previously reported facilities that have been completed, canceled, or deferred beyond the upcoming ten-year period are not included. This Ten-Year Plan is tentative information only and, pursuant to A.R.S. § 40-360.02(F), is subject to change without notice at the discretion of APS, based on land usage, growth pattern changes, regulatory or legal developments, or for other reasons. A summary of changes from last year's plan is provided below.

For the convenience of the reader, APS has included system maps showing the general location and in-service date for all overhead transmission lines planned by APS for Arizona and the Phoenix Metropolitan Area. Written descriptions of each proposed transmission line are provided on subsequent pages in the currently expected chronological order of each project. The line routings shown on the system maps and the descriptions of each transmission line are intended to be general and are subject to revision. Specific routing is determined by the Arizona Power Plant and Transmission Line Siting Committee when issuing a Certificate of Environmental Compatibility and through subsequent right-of-way acquisition. Pursuant to the amendments to A.R.S. § 40-360.02, this filing also includes technical study results for the projects identified. The technical study results show project needs which are generally based on either security (contingency performance) or adequacy (generator interconnection or increasing transfer capability) or both.

APS believes that the projects identified in this 2004-2013 Ten-Year Plan, with their associated in-service dates, will ensure that APS' transmission system meets all applicable reliability criteria. However, changes in regulatory requirements or underlying assumptions such as load forecasts, generation expansion, financial condition, and other utilities' plans, may substantially impact this Ten-Year Plan and could result in changes to anticipated in-service dates or project scopes. Additionally, the future formation and role of the WestConnect Regional Transmission Organization (RTO), or other federal and regional mandates, may impact this Ten-Year Plan and the transmission planning process generally.

Changes From 2003-2012 Ten-Year Plan

The following is a list of projects that were changed or removed from the Ten Year plan filed last year, along with a brief description of why the change was made.

- Projects removed from plan

  The Buckeye loop-in of Gila Bend-Liberty 230-kV line is no longer in the plan, along with the Silver King loop-in of Cholla-Saguaro 500-kV and the Gila Bend-Pinal West 230-kV line. It was determined that the objectives of these projects can be met by other system additions.

  Along with those projects the Rudd loop-in of the Jojoba-Kyrene 500-kV line is no longer in the plan. It was determined that this project would reduce system performance and the Phoenix area import capability. The technical study can be referenced in the Technical Study Report which is also part of this filing.

- Table Mesa replaced by Raceway

  The Table Mesa substation has been replaced by a 500-kV substation at Raceway with a 500/230-kV transformer. The Navajo-Westwing 500-kV line

will be looped-in to Raceway instead of Table Mesa and the loop-in will be delayed from 2009 to 2010. The TS5-Table Mesa 500-kV line will now be TS5-Raceway 500-kV. Also, because of the replacement of Table Mesa with Raceway the Table Mesa-Raceway 230-kV lines and the Table Mesa loop-in of Gavilan Peak-Prescott 230-kV line have been deleted.

- South East Valley Project

  The project has changed to include a Santa Rosa substation with a 500/230-kV transformer. As a result, the Pinal West-Santa Rosa 230-kV line has been deleted. The Pinal West-Santa Rosa-SEV portion has been delayed from 2006 to 2007.

- Northern Area Interconnections

  The Flagstaff loop-in of Cholla-Coconino 230-kV line has been replaced with a 345/69-kV interconnection at the WAPA Flagstaff substation.

  The Cholla-Second Knoll 230-kV line has been replaced with a 500/69-kV interconnection of SRP's Coronado-Silver King 500-kV line into Second Knoll.

  These changes result in interconnections that are more cost-effective and a better use of the existing transmission system.

- Timing Changes and Name Changes

  The Gavilan Peak loop-in of the Pinnacle Peak-Prescott 230-kV line has been delayed from 2004 to 2005. The West Valley South Project will now terminate at the TS4 substation instead of the Liberty substation. The Palo Verde-TS5 500-kV line has been advanced from 2008 to 2007. Trilby Wash is now named TS1 and the TS5-TS1 230-kV portion of West Valley North has been advanced from 2008 to 2007. The proposed 230-kV substation in Yuma will be named TS8 and the Gila Bend-TS8 230-kV line has been delayed from 2010 to 2012. Also, the name

of the proposed Misty Willow 230-kV substation has changed to TS6. The Westwing-El Sol 230-kV line has been delayed from 2012 to 2013.

APS EHV & OUTER DIVISION 115/230 KV TRANSMISSION PLANS 2004 - 2013

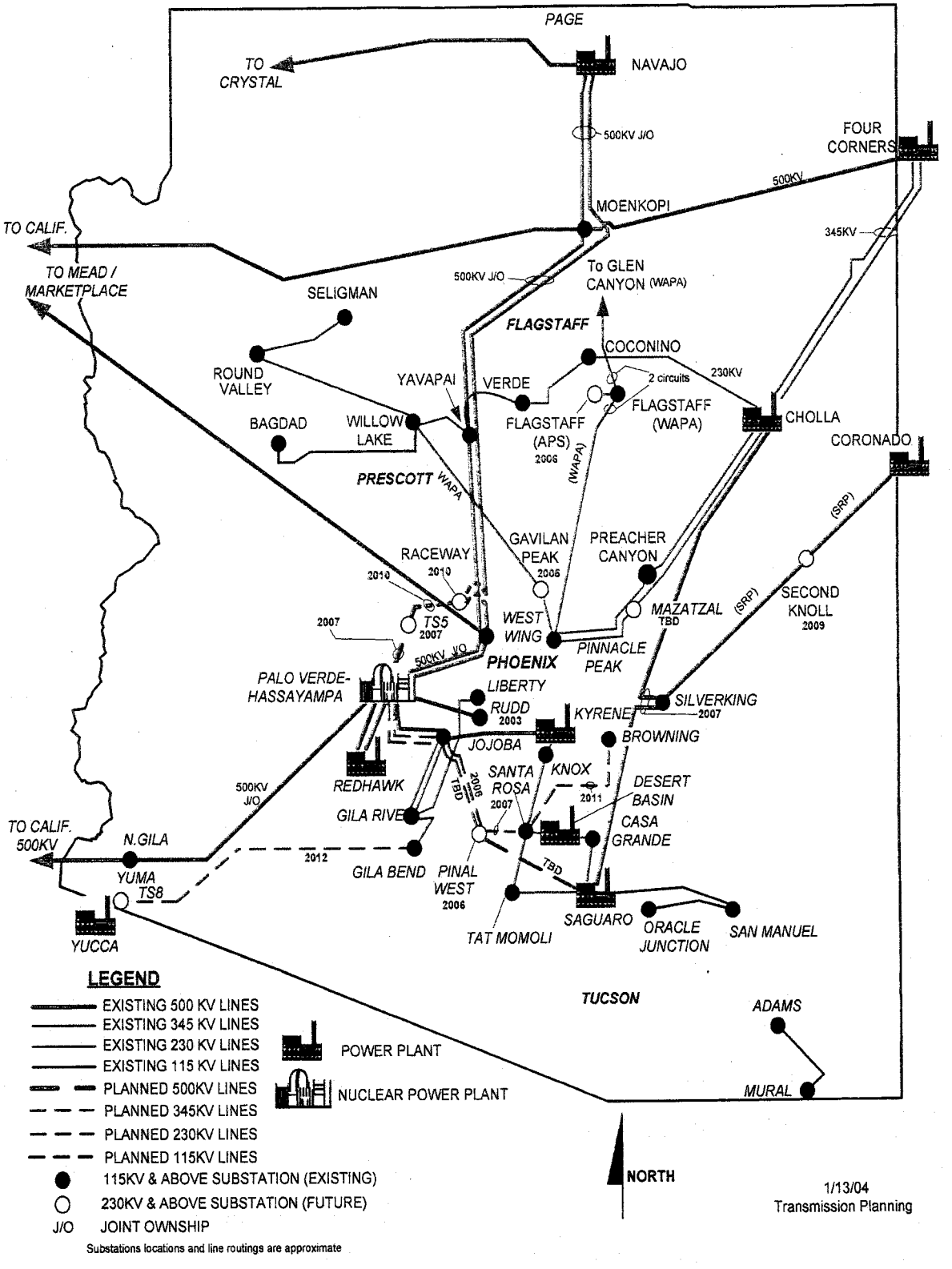

PHOENIX METROPOLITAN (WEST) AREA 230KV TRANSMISSION PLANS 2004- 2013

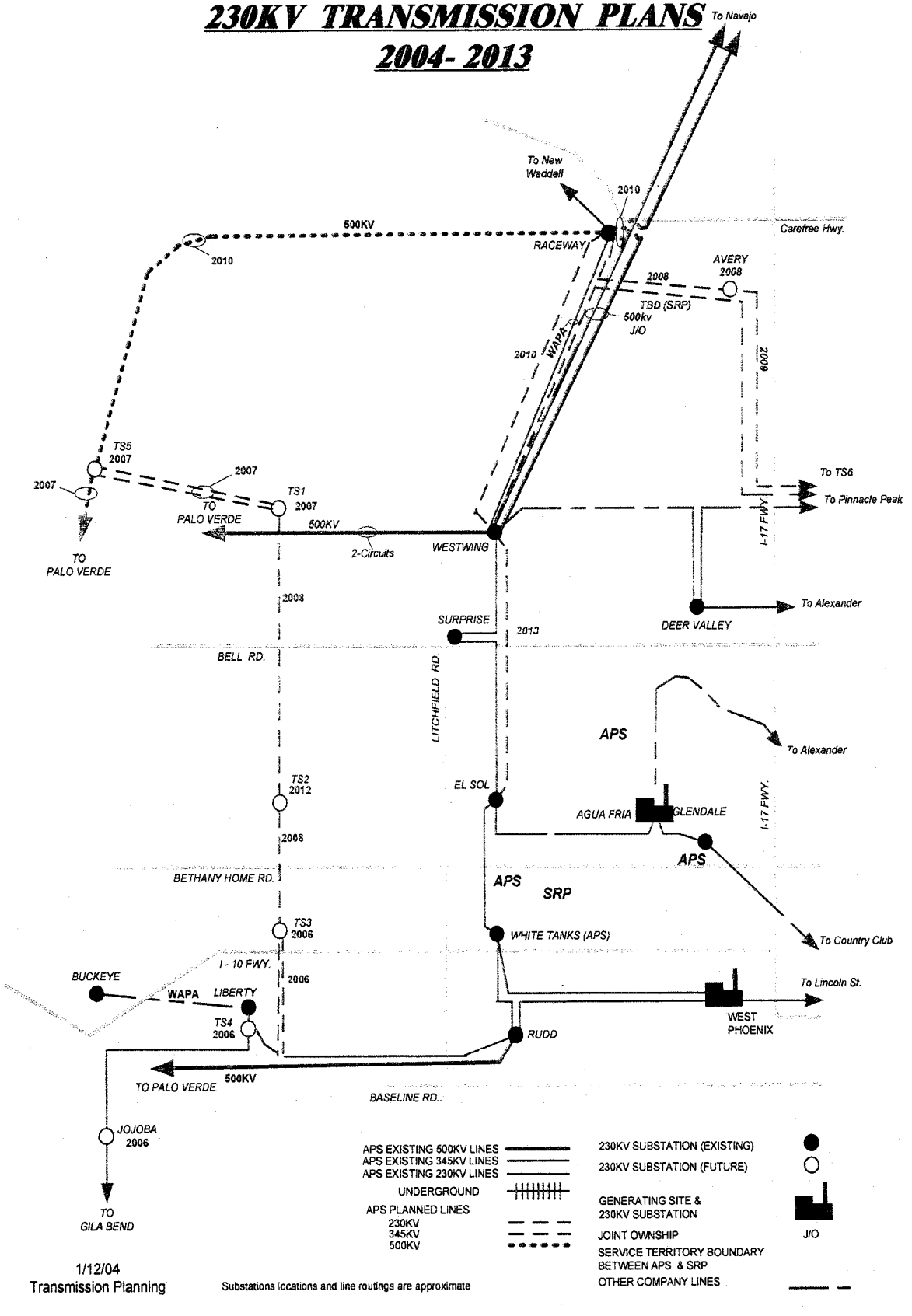

PHOENIX METROPOLITAN (EAST) AREA
230KV TRANSMISSION PLANS
2004- 2013

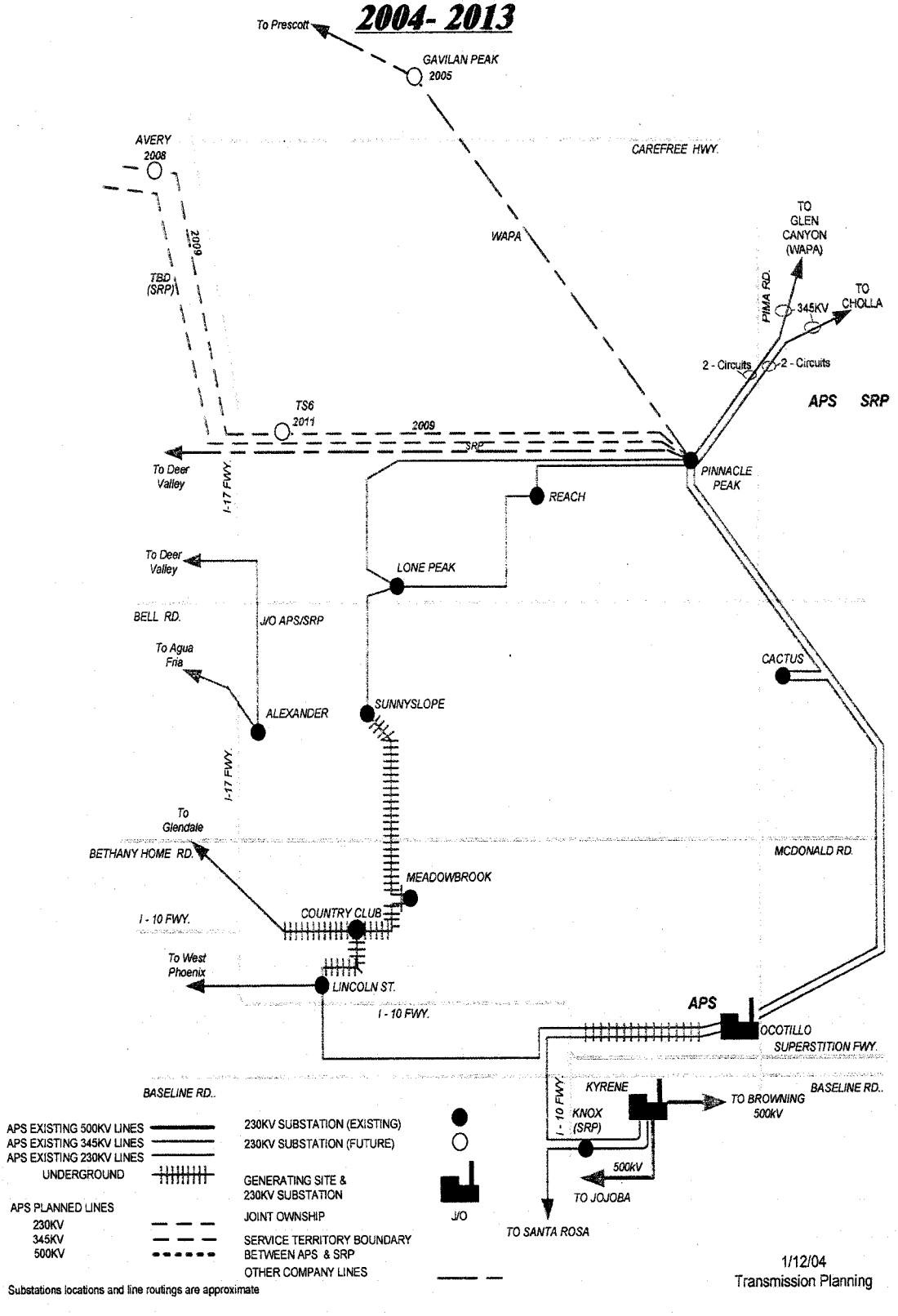

Arizona Public Service Company
2004 —2013
Ten-Year Plan

Planned Transmission Description
2005

Line Designation	Gavilan Peak loop-in of Pinnacle Peak-Prescott 230-kV line.
Size	
(a) Voltage	230-kV AC.
(b) Capacity	150MW
(c) Point of Origin	Pinnacle Peak-Prescott 230-kV line near 12th Street and Desert Hills Drive; Sec. 28, T6N, R3E.
(d) Intermediate Point	None.
(e) Point of Termination	Gavilan Peak 230/69-kV substation to be built in 2005, 1/4 mile south of the intersection of 12th Street and Desert Hills Drive; within the northeast quarter of Sec. 28, T6N, R3E.
(f) Length	Approximately 1 span each of two single-circuit lines.
Routing	Gavilan Peak 230-kV substation will be adjacent to the Pinnacle Peak-Prescott 230-kV line so it will just be one or two spans.
Purpose	This substation will be needed to serve projected need for electric energy in the area immediately north of the Phoenix Metropolitan area. Additionally, improved reliability and continuity of service will result for the growing communities in the areas of Desert Hills, Anthem, and New River.
Date	
(a) Construction Start	2003
(b) Estimated In Service	2005

A Certificate of Environmental Compatibility is not needed for this project.

Arizona Public Service Company
2004 —2013
Ten-Year Plan
Planned Transmission Description
2006

Line Designation	Rudd – TS3 – TS4 230-kV line.
Size	
(a) Voltage	230-kV AC.
(b) Capacity	1200 MVA.
(c) Point of Origin	Rudd-Liberty 230-kV transmission line near the intersection of Broadway Road and Perryville Road; within Sec. 28, T1N, R1W.
(d) Intermediate Point	TS3 230/69-kV substation to be constructed in 2006 near the corner of Camelback Rd. and Cotton Ln.; Sec. 24, T2N, R2W.
(e) Point of Termination	A new TS4 230kV substation located just south of the WAPA Liberty substation, Sec. 19, T1N, R2W.
(f) Length	Approximately 7 miles of double-circuit 230-kV.
Routing	North and east from the existing Rudd-Liberty 230-kV transmission line approximately 7 miles to the TS3 substation and returning south and west to the existing line. Then the termination of the line will be moved from the Liberty substation to the TS4 substation.
Purpose	This 230-kV line will provide a source for the TS3 230/69-kV substation and 69-kV substations planned in the western and southwestern Phoenix Metropolitan area. Increased reliability and quality of service will result for customers served by the 230/69-kV substation.
Date	
(a) Construction Start	2002 (The component that was already certificated in Case No. 115, Decision No. 64473, Rudd-Liberty was in-service for the summer of 2003.) Construction for the double-circuit to TS3 will start in 2004.
(b) Estimated In Service	2006

Certificate of Environmental Compatibility issued 2/12/02 (Case No. 115, Decision No. 64473, Southwest Valley Project). Revised on 4/9/02, Decision No. 64704. This CEC is for the 230-kV line, Rudd-Liberty, running east and west on the same poles as the Palo Verde-Rudd 500-kV line. Certificate of Environmental Compatibility issued 12/24/03 (Case No. 122, Decision No. 66646, West Valley South Project). This CEC is for the 230-kV component running from the existing Rudd-Liberty line to the TS3 substation and for the TS4 substation.

Arizona Public Service Company
2004 —2013
Ten-Year Plan

Planned Transmission Description
2006

Line Designation	345/69-kV interconnection at WAPA's Flagstaff 345-kV bus.
Size	
(a) Voltage	345-kV AC.
(b) Capacity	150 MW.
(c) Point of Origin	WAPA's Flagstaff 345-kV substation; Sec. 24, T21N, R9E.
(d) Intermediate Point	None.
(e) Point of Termination	A new 69-kV substation to be built in 2006 adjacent to WAPA's Flagstaff substation; Sec. 24, T21N, R9E.
(f) Length	Approximately 1 span.
Routing	A 345/69-kV transformer will interconnect into WAPA's Flagstaff substation.
Purpose	This substation will serve projected need for electric energy in the APS' northern service area. The project will improved reliability and continuity of service for the growing communities in northern Arizona.
Date	
(a) Construction Start	2004
(b) Estimated In Service	2006

A Certificate of Environmental Compatibility is not needed for this project.

Arizona Public Service Company
2004 —2013
Ten-Year Plan

Planned Transmission Description
2006

Line Designation	Hassayampa – Jojoba – Pinal West 500-kV line.
Size	
(a) Voltage	525-kV AC.
(b) Capacity	To be determined.
(c) Point of Origin	Hassayampa substation or another nearby 500-kV substation; Sec. 3, T1S, R6W.
(d) Intermediate Point	Jojoba 500-kV substation; Sec. 25, T2S, R4W.
(e) Point of Termination	Pinal West 500/345-kV substation to be constructed in 2006, in the vicinity of the town of Mobile; Sec. 18, T5S, R2E
(f) Length	Approximately 60 miles of single-circuit 500-kV
Routing	South and east from Hassayampa, following the existing 500-kV line to Jojoba, then continuing on to the proposed Pinal West 500-kV substation in the vicinity of the town of Mobile.
Purpose	This project is a result of the CATS study. When combined with the rest of the Southeast Valley project the line will increase import capability to the Phoenix Metropolitan area as well as increase the export capability from the Palo Verde/Hassayampa area. It is anticipated the line will be a joint participation project with SRP as the project manager.
Date	
(a) Construction Start	2005
(b) Estimated In Service	2006

An application for a Certificate of Environmental Compatibility was filed by SRP on 12/16/03, Case No. 124.

Arizona Public Service Company
2004 —2013
Ten-Year Plan

Planned Transmission Description
2007

Line Designation	Pinal West – Santa Rosa – Browning 500-kV line.
Size	
(a) Voltage	525-kV AC.
(b) Capacity	To be determined.
(c) Point of Origin	Pinal West 500/345-kV substation to be constructed in 2006, in the vicinity of the town of Mobile; Sec. 18, T5S, R2E
(d) Intermediate Point	Santa Rosa 500-kV substation to be constructed in 2007 near the existing Santa Rosa 230-kV substation; Sec. 30, T5S, R4E.
(e) Point of Termination	Browning 500/230-kV substation; Sec. 12, T1S, R8E.
(f) Length	Approximately 60 miles of single-circuit 500-kV
Routing	South and east from Pinal West to the Santa Rosa 500-kV substation. Then east and north to the Browning 500/230-kV substation.
Purpose	This project is a result of the CATS study. The line will increase import capability to the Phoenix Metropolitan area as well as increase the export capability from the Palo Verde/Hassayampa area. It is anticipated the line will be a joint participation project with SRP as the project manager.
Date	
(a) Construction Start	2005
(b) Estimated In Service	Pinal West-Santa Rosa in 2007. Santa Rosa-Browning in 2011

An application for a Certificate of Environmental Compatibility has not yet been filed.

Arizona Public Service Company
2004—2013
Ten-Year Plan

Planned Transmission Description
2007

Line Designation	Palo Verde-TS5 500-kV line.
Size	
(a) Voltage	525-kV AC.
(b) Capacity	To be determined.
(c) Point of Origin	Palo Verde Power Plant or nearby 500-kV substation.
(d) Intermediate Point	None.
(e) Point of Termination	TS5 500/230-kV substation to be constructed in 2007. Location to be determined, approximately in the north Buckeye/Sun Valley area.
(f) Length	Approximately 45 miles of single-circuit line.
Routing	Generally north from Palo Verde/Hassayampa for approximately 45 miles.
Purpose	This line will serve projected need for electric energy in the area immediately north and west of the Phoenix Metropolitan area. It will increase the import capability to the Phoenix Metropolitan area as well as increase the export capability from the Palo Verde/Hassayampa area.
Date	
(a) Construction Start	2006
(b) Estimated In Service	2007

An application for a Certificate of Environmental Compatibility is expected to be filed during 2004.

Arizona Public Service Company
2004 —2013
Ten-Year Plan

Planned Transmission Description
2007

Line Designation	TS5-TS1 230-kV line.
Size	
(a) Voltage	230-kV AC.
(b) Capacity	To be determined.
(c) Point of Origin	TS5 500/230-kV substation to be constructed in 2007. Location to be determined, approximately in the north Buckeye/Sun Valley area.
(d) Intermediate Point	None.
(e) Point of Termination	TS1 230/69-kV substation to be constructed in 2007 approximately 11 miles west of Westwing substation; Sec. 23, T4N, R2W.
(f) Length	Approximately 15 miles of single-circuit line.
Routing	East from TS5 substation to TS1 substation for approximately 15 miles.
Purpose	This line is required to serve the increasing need for electric energy in the western Phoenix Metropolitan area, providing more capability to import power into the Phoenix Metropolitan area along with improved reliability and continuity of service for growing communities such as El Mirage, Surprise, and Youngtown.
Date	
(a) Construction Start	2006
(b) Estimated In Service	2007

The TS5-TS1 230-kV line will be sited as part of the West Valley North project. An application for the Certificate of Environmental Compatibility for the West Valley North project is planned for 2004.

Arizona Public Service Company
2004 —2013
Ten-Year Plan

Planned Transmission Description
2008

Line Designation	TS3-TS2-TS1 230-kV line.
Size	
(a) Voltage	230-kV AC.
(b) Capacity	To be determined.
(c) Point of Origin	TS3 230/69-kV substation to be constructed in 2006 near the corner of Camelback Rd. and Cotton Ln.; Sec. 24, T2N, R2W.
(d) Intermediate Point	TS2 230/69-kV substation to be constructed in 2012; Sec. 25, T3N, R2W.
(e) Point of Termination	TS1 230/69-kV substation to be constructed in 2007 approximately 11 miles west of Westwing substation; Sec. 23, T4N, R2W.
(f) Length	Approximately 12 miles of single-circuit line.
Routing	North from the TS3 substation, generally following the Loop 303, to the TS1 substation passing the location of the future TS2 substation which is currently projected to be in-service in 2012.
Purpose	This line is required to serve the increasing need for electric energy in the western Phoenix Metropolitan area, providing more capability to import power into the Phoenix Metropolitan area along with improved reliability and continuity of service for growing communities such as El Mirage, Surprise, and Youngtown.
Date	
(a) Construction Start	2007
(b) Estimated In Service	2008

The TS3-TS2 230-kV line portion was sited as part of the West Valley South project and a Certificate of Environmental Compatibility was issued 12/24/03 (Case No. 122, Decision No. 66646). The TS1-TS2 230-kV line portion will be sited as part of the West Valley North project. An application for the Certificate of Environmental Compatibility for the West Valley North project is planned for 2004.

Arizona Public Service Company
2004—2013
Ten-Year Plan

Planned Transmission Description
2008

Line Designation	Raceway-Avery 230-kV line.
Size	
(a) Voltage	230-kV AC.
(b) Capacity	1200 MVA.
(c) Point of Origin	Raceway substation located along the Westwing-New Waddell 230-kV line, approximately 3 miles south of the New Waddell Dam; Sec. 4, T5N, R1E.
(d) Intermediate Point	None.
(e) Point of Termination	A new Avery substation near Dove Valley Road and 39th Avenue; Sec. 10, T5N, R2E.
(f) Length	Approximately 10 miles of double-circuit line.
Routing	South from Raceway substation approximately 1 mile, paralleling existing transmission lines, then east approximately 9 miles to the new Avery substation.
Purpose	This line will serve projected need for electric energy in the area immediately north of the Phoenix Metropolitan area. Additionally, improved reliability and continuity of service will result for the area's growing communities such as Anthem, Desert Hills and New River.
Date	
(a) Construction Start	2004
(b) Estimated In Service	2008

Certificate of Environmental Compatibility issued 6/18/03 (Case No. 120, Decision No. 64473, North Valley Project).

Arizona Public Service Company
2004 —2013
Ten-Year Plan

Planned Transmission Description
2009

Line Designation	Pinnacle Peak-TS6-Avery 230-kV lines.
Size	
(a) Voltage	230-kV AC.
(b) Capacity	1200 MVA.
(c) Point of Origin	Pinnacle Peak substation; Sec. 25, T4N, R3E.
(d) Intermediate Point	TS6 substation to be constructed in 2011; Sec. 12, T4N, R3E.
(e) Point of Termination	Avery substation near Dove Valley Road and 39th Avenue; Sec. 10, T5N, R2E.
(f) Length	Approximately 16 miles of double-circuit line.
Routing	Along the existing 230-kV right-of-way, west 10 miles from Pinnacle Peak substation to approximately Interstate 17, generally parallel to and south of Happy Valley Road; then north 5 miles, generally parallel to Interstate 17, to Dove Valley Road, then west to the new Avery substation.
Purpose	These lines will serve projected need for electric energy in the area immediately north of the Phoenix Metropolitan area. Additionally, improved reliability and continuity of service will result for the growing communities in the areas of Anthem, Desert Hills, and New River.
Date	
(a) Construction Start	2004
(b) Estimated In Service	2009

Certificate of Environmental Compatibility issued 6/18/03 (Case No. 120, Decision No. 64473, North Valley Project).

Arizona Public Service Company
2004—2013
Ten-Year Plan

Planned Transmission Description
2009

Line Designation	Second Knoll loop-in of Coronado-Silver King 500-kV line.
Size	
(a) Voltage	525-kV AC.
(b) Capacity	To be determined.
(c) Point of Origin	Coronado-Silver King 500-kV line; T15N, R20E.
(d) Intermediate Point	None.
(e) Point of Termination	Second Knoll 500/69-kV substation to be built in 2009; T15N, R20E.
(f) Length	Only 1 span of single-circuit line.
Routing	The Second Knoll substation will be built adjacent to the Coronado-Silver King 500-kV line, therefore limiting the distance to 1 or 2 spans.
Purpose	This line will be needed to serve projected need for electric energy in Show Low and the surrounding communities.
Date	
(a) Construction Start	2008
(b) Estimated In Service	2009

A Certificate of Environmental Compatibility is not needed for this project.

Arizona Public Service Company
2004 —2013
Ten-Year Plan

Planned Transmission Description
2010

Line Designation	Raceway loop-in of Navajo-Westwing 500-kV line.
Size	
(a) Voltage	525-kV AC.
(b) Capacity	To be determined.
(c) Point of Origin	Navajo-Westwing 500-kV line; Sec. 4, T5N, R1E.
(d) Intermediate Point	Raceway 500-kV substation to be constructed in 2010 adjacent to the Navajo-Westwing 500-kV line and approximately 1 mile from the existing Raceway 230kV substation; Sec. 4, T5N, R1E.
(e) Point of Termination	Raceway 230-kV substation; Sec. 4, T5N, R1E.
(f) Length	One span of double-circuit 500-kV line from the Navajo-Westwing 500-kV line to the Raceway 500-kV substation. Approximately 1 mile of double-circuit 230-kV lines to the Raceway 230-kV substation.
Routing	Navajo-Westwing 500-kV line will be adjacent to the Raceway 500-kV substation. From the 500/230-kV transformers at the Raceway 500-kV substation, 230-kV lines would run south to the Raceway 230-kV substation.
Purpose	The loop-in of Raceway 500-kV line will be needed to provide contingency support to Raceway, increase system reliability, and increase the import capability to the Phoenix Metropolitan area.
Date	
(a) Construction Start	2009
(b) Estimated In Service	2010

An application for a Certificate of Environmental Compatibility has not yet been filed.

Arizona Public Service Company
2004—2013
Ten-Year Plan

Planned Transmission Description
2010

Line Designation	TS5 – Raceway 500-kV line.
Size	
(a) Voltage	525-kV AC.
(b) Capacity	To be determined.
(c) Point of Origin	TS5 500/230-kV substation to be constructed in 2007. Location to be determined, approximately in the north Buckeye/Sun Valley area.
(d) Intermediate Point	None.
(e) Point of Termination	Raceway 500-kV substation to be constructed in 2010 adjacent to the Navajo-Westwing 500-kV line and approximately 1 mile from the existing Raceway 230kV substation; Sec. 4, T5N, R1E.
(f) Length	Approximately 40 miles of single-circuit line.
Routing	North from TS5 substation and then in a northeasterly direction to the Raceway substation.
Purpose	This line will be needed to serve projected need for electric energy in the area immediately north and west of the Phoenix Metropolitan area. It will increase the import capability to the Phoenix Metropolitan area as well as increase the export capability from the Palo Verde/Hassayampa area.
Date	
(a) Construction Start	2008
(b) Estimated In Service	2010

An application for a Certificate of Environmental Compatibility has not yet been filed.

Arizona Public Service Company
2004 —2013
Ten-Year Plan

Planned Transmission Description
2010

Line Designation	Westwing – Raceway 230kV Line.
Size	
(a) Voltage	230-kV AC.
(b) Capacity	1200 MVA.
(c) Point of Origin	Westwing substation; Sec 12, T4N, R1W.
(d) Intermediate Point	None.
(e) Point of Termination	Raceway substation located along the Westwing-New Waddell 230-kV line, approximately 3 miles south of the Waddell Dam; Sec. 4, T5N, R1E.
(f) Length	Approximately 7 miles of line on double-circuit poles.
Routing	Northeast from Westwing substation paralleling existing transmission lines to the Raceway substation which will be adjacent to the existing transmission lines.
Purpose	The 230-kV line will serve increasing loads in the far north and northwest parts of the Phoenix Metropolitan area and provide contingency support for multiple Westwing 500/230-kV transformer outages.
Date	
(a) Construction Start	2007
(b) Estimated In Service	2010

Certificate of Environmental Compatibility issued 6/18/03 (Case No. 120, Decision No. 64473, North Valley Project).

Arizona Public Service Company
2004 —2013
Ten-Year Plan

Planned Transmission Description
2012

Line Designation	Gila Bend-TS8 230-kV line.
Size	
(a) Voltage	230-kV AC.
(b) Capacity	To be determined.
(c) Point of Origin	Gila Bend substation; Sec. 36, T2N, R1W.
(d) Intermediate Point	None.
(e) Point of Termination	TS8 230-kV substation to be built in or near Yuma, Arizona
(f) Length	Approximately 115 mile of single-circuit line.
Routing	West from Gila Bend to Yuma, generally parallel to Interstate 8.
Purpose	As a new transmission path to Yuma area, this 230-kV line will provide transmission capacity required to supplement limited transmission and generation resources in the Yuma area. This 230-kV line will also provide another source for the Gila Bend area.
Date	
(a) Construction Start	2010
(b) Estimated In Service	2012

An application for a Certificate of Environmental Compatibility has not yet been filed.

Arizona Public Service Company
2004—2013
Ten-Year Plan

Planned Transmission Description
2013

Line Designation	Westwing-El Sol 230-kV line.
Size	
(a) Voltage	230-kV AC.
(b) Capacity	1200 MVA.
(c) Point of Origin	Westwing substation; Sec. 12, T4N, R1W.
(d) Intermediate Point	None.
(e) Point of Termination	El Sol substation; Sec. 30, T3N, R1E.
(f) Length	Approximately 11 miles of single-circuit line.
Routing	Per Certificate.
Purpose	This line will increase system capacity to serve growing demand for electric energy in the Phoenix Metropolitan area, while maintaining system reliability and integrity for delivery of bulk power from Westwing south into the APS Phoenix Metropolitan area 230-kV transmission system.
Date	
(a) Construction Start	2012
(b) Estimated In Service	2013

Certificate of Environmental Compatibility issued 7/26/73 (Case No. 9, docket No. U-1345). Note that this Certificate authorizes two double-circuit lines. Construction of the first double-circuit line was completed in March 1975. Construction of the second line, planned to be built with double-circuit capability but initially operated with a single circuit, is described above.

Arizona Public Service Company
2004 —2013
Ten-Year Plan

Planned Transmission Description
TBD

Line Designation	Mazatzal loop-in of Cholla-Pinnacle Peak 345-kV line.
Size	
(a) Voltage	345-kV AC.
(b) Capacity	To be determined.
(c) Point of Origin	Cholla-Pinnacle Peak 345-kV line; near Sec. 3, T8N, R10E.
(d) Intermediate Point	None.
(e) Point of Termination	Mazatzal 345/69-kV substation; approximately Sec. 3, T8N, R10E.
(f) Length	Approximately 1 span each of two single-circuit lines.
Routing	The Mazatzal substation will be built adjacent to the Cholla-Pinnacle Peak 345-kV line so it will be just one or two spans.
Purpose	This substation will serve projected need for electric energy in the area of Payson and the surrounding communities. Additionally, improved reliability and continuity of service will result for the growing communities in the Payson area.
Date	
(a) Construction Start	TBD
(b) Estimated In Service	TBD

A Certificate of Environmental Compatibility is not needed for this project.

Arizona Public Service Company
2004—2013
Ten-Year Plan

Planned Transmission Description
TBD

Line Designation	Palo Verde - Pinal West - Saguaro 500-kV line.
Size	
(a) Voltage	525-kV AC.
(b) Capacity	To be determined.
(c) Point of Origin	Palo Verde Power Plant; Sec. 34, T1N, R6W.
(d) Intermediate Point	Pinal West substation in the Casa Grande area. Hassayampa and Jojoba substations are also possible interconnection points.
(e) Point of Termination	Saguaro substation; Sec. 14, T10S, R10E.
(f) Length	Approximately 130 miles of new line to be built on single-circuit poles or towers. Some sections may be built on double-circuit structures.
Routing	South and east from the Palo Verde switchyard, paralleling existing transmission lines for part of the route. The approved corridor is defined in the CEC identified below.
Purpose	This line is the result of the joint participation CATS study. The line will be needed to increase the adequacy of the existing EHV transmission system and permit increased power delivery throughout the state. It is anticipated the line will be a joint participation project.
Date	
(a) Construction Start	TBD
(b) Estimated In Service	TBD

Certificate of Environmental Compatibility issued 01/23/1976 (Case No. 24, Decision No. 46802).

A subsidiary of Pinnacle West Capital Corporation

TRANSMISSION PLANNING PROCESS AND GUIDELINES

APS Transmission Planning

January 2004

TRANSMISSION PLANNING PROCESS AND GUIDELINES

I. INTRODUCTION 1

II. PLANNING METHODOLOGY

A. General 1

B. 230kV Long Range System 2

C. Ten Year System Expansion Plans 3

D. Facilities Keyed to Generation/Resource Additions 4

E. Generation Schedules 4

F. Study Period 5

G. Regional Coordination Planning

1. Western Electricity Coordinating Council 5
2. Joint Studies 6

H. Load Projections 6

I. Alternative Evaluations

1. General 6
2. Power Flow Analyses 6
3. Transient Stability Studies 7
4. Short Circuit Studies 7
5. Losses Analyses 7
6. Transfer Capability Studies 7
7. Subsynchronous Resonance (SSR) 7
8. Economic Evaluation 7

III. PLANNING ASSUMPTIONS

A. General

1. Loads 8
2. Generation and Other Resources 8
3. Nominal Voltage Levels 8
4. Source of Data Bases 8
5. Voltage Control Devices 8
6. Phase Shifters 8
7. Conductor Sizes 8
8. 69kV System Modeling 9
9. Substation Transformers 9
10. Switchyard Arrangements
    a. 500kV & 345kV Substations 10
    b. 230kV Substations 11
11. Series Capacitor Application 11
12. Shunt and Tertiary Reactor Application 11

B. Power Flow Studies

1. System Stressing 11
2. Displacement 12

C. Transient Stability Studies

1. Fault Simulation 12
2. Margin 12
3. Unit Tripping 12
4. Machine Reactance Representation 12
5. Fault Damping 12
6. Series Capacitor Switching 12

D. Short Circuit Studies

1. Generation Representation 13
2. Machine Reactance Representation 13
3. Line Representation 13
4. Transformer Representation 13

IV. SYSTEM PERFORMANCE

A. Power Flow Studies

1. Normal (Base Case Conditions)

a. Voltage Levels

1) General 13

2) Specific Buses 14

b. Facilities Loading Limits

1) Transmission Lines 14

2) Underground Cable 14

3) Transformers 14

4) Series Capacitors 14

c. Interchange of VARs 14

d. Distribution of Flow 15

2. Single Contingency Outages

a. Voltage Levels 15

b. Facilities Loading Limits

1) Transmission Lines 15

2) Underground Cable 15

3) Transformers 15

4) Series Capacitors 15

c. Generator Units 15

d. Impact on Interconnected Systems 15

B. Transient Stability Studies

1. Fault Simulation 16

2. Series Capacitor Switching 16

3. System Stability 16

4. Reclosing 16

C. Short Circuit Studies 16

I. INTRODUCTION AND PURPOSE

The Transmission Planning Process and Guidelines (Guidelines) are used by Arizona Public Service Company (APS) to assist in planning its Extra High Voltage (EHV) transmission system (345kV and above) and High Voltage transmission system (230kV and 115kV). In addition to these Guidelines, APS follows the Western Electricity Coordinating Council's (WECC) regional planning reliability criteria for system disturbance and performance levels. These WECC Reliability Criteria, which can be found in their entirety on the WECC website, are (1) WECC/NERC Reliability Criteria for Transmission System Planning (http://www.wecc.biz/WECC-NERC_Planning%20Standards_9-18-02.pdf) and (2) Minimum Operating Reliability Criteria (http://www.wecc.biz/MORC_Pages_9-02.pdf). These Guidelines are for internal use by APS and may be changed or modified at any time without notice. Thus, others should not use these Guidelines without consultation with APS.

II. PLANNING METHODOLOGY

A. General

APS uses a deterministic approach for transmission system planning. Under this approach, system performance should meet certain specific criteria under normal conditions (all lines in-service) and for any single contingency condition (any one element out-of-service). In general, an adequately planned transmission system will:

- Provide an acceptable level of service at the lowest cost for normal and single contingency operating conditions.
- Not result in the loss of load for any single contingency outage.
- Not result in cascading, overloaded equipment, or unacceptable voltage conditions for any single contingency outage.
- Work in compliment with local generation in load constrained areas.

At present, probabilistic computational techniques are not directly used in the transmission planning process. However, system reliability performance is examined in the solution of switchyard circuit breaker arrangements, transformer reserve capacity, and in the choice of using single contingency outages for reserve transmission capacity. Further, deterministic guidelines generally provide some margin. The WECC is developing and plans to phase in probabilistic performance criteria in its planning criteria, which APS generally follows.

These planning methodologies, assumptions, and guidelines are used as the basis for the development of future transmission facilities. Additionally, consideration of potential alternatives to transmission facilities (such as distributed generation or new technologies) is evaluated on a case-specific basis. As the system grows and changes, and as more planning tools become available to the transmission planning engineer, revisions or additions to these guidelines will be made as appropriate.

B. 230kV Long-Range System

APS' planning process begins with the review of the major long-range 230kV system requirements. APS' philosophy regarding long-range 230kV transmission planning for the Phoenix Metropolitan Area has been to develop four major source points (Westwing, Pinnacle Peak, Kyrene, and Rudd) in the Valley; see *Figure 1*. In the future, other major source points may become necessary.

FIGURE 1

APS VALLEY LONG RANGE 230KV TRANSMISSION PHILOSOPHY

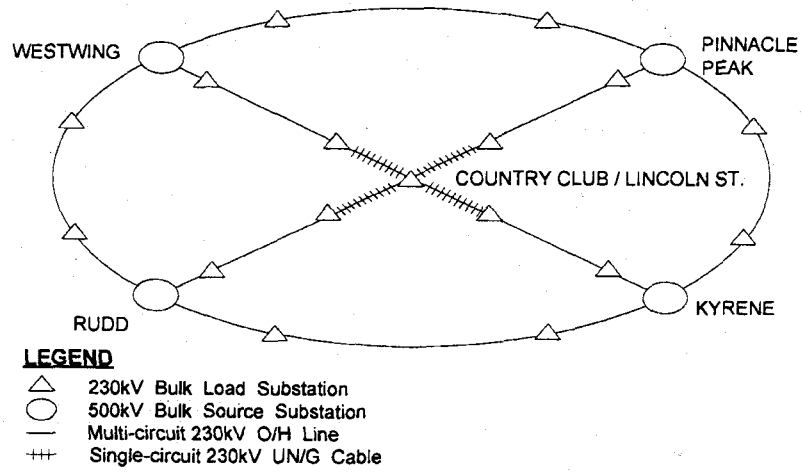

The Long-Range Substation Development Master Plan for the Phoenix Metropolitan Area will be utilized in determining the location of future 230/69kV and 69/12.5kV substations. This Master Plan considered future land use plans that were developed by government agencies, Landis aerial photo maps, and master plans that were provided by private developers. Other factors considered in developing the Master Plan included (1) APS' long-range forecasted load densities per square mile for residential, commercial, and industrial loads, (2) the 12.5kV service areas and associated number of 69/12.5kV substations, and (3) the 69kV service areas and associated 230/69kV substations for the Phoenix area.

C. Ten Year System Expansion Plans

The next step is to conduct detailed 230kV facility studies to develop APS' ten-year 230kV system expansion plans. In developing these plans, the 230kV and 69kV system requirements are coordinated to minimize future expansion of facilities, while at the same time achieving the long range 230kV and 69kV substation expansion plans set forth in the Master Plan. Consideration is given to load growth patterns due to master planned developments, new housing developments, shopping centers, high/mid rise buildings, and industrial parks. Also considered, are other system changes affected by right-of-way,

facilities siting constraints, routing of future transportation corridors, and joint planning with neighboring utilities and governmental entities.

D. Facilities Keyed to Generation/Resource Additions

New EHV transmission facilities are also required in conjunction with generation resources due to (1) a "merchant" request by an Independent Power Producer (IPP) for generator interconnection to the APS system, (2) a "merchant" request for point-to-point transmission service from the generator (receipt point) to the designated delivery point, or (3) designation of new resources or re-designation of existing units to serve APS network load (including removal of an older units' native load designation).

If an interconnection or transmission service request is made by an IPP to interconnect into or deliver power over the APS system, APS will perform the study work and enter into appropriate agreements pursuant to applicable FERC regulations and APS' Open Access Transmission Tariff. At present, FERC is reviewing and standardizing the interconnection process and agreements. APS may design and construct, at the IPP's expense, transmission facilities identified in the Facilities Study that are needed to accommodate the interconnection or transmission service request.

E. Generation Schedules

For planning purposes, economic dispatches of network resources are determined for APS' system peak load in the following manner:

a. Determine base generation available and schedule these units at maximum output.
b. Determine resources purchased from other utilities, IPPs, or power marketing agencies.
c. Determine APS' spinning reserve requirements.

d. Schedule intermediate generation (oil/gas steam units) such that the spinning reserve requirements in section (c) above are met.

e. Determine the amount of peaking generation (combustion turbine units) required to supply the remaining system peak load.

Phoenix area network resources are dispatched based on economics and any existing import limitations. When possible, spinning reserve will be carried on higher cost Phoenix area network generating units.

Generation output schedules for interconnected utilities and IPPs are based upon consultation with the neighboring utilities and IPPs or as modeled in the latest data in WECC coordinated study cases.

F. Study Period

Transmission plans are updated on a continuing basis to determine the projected facilities needed for each year over a ten-year period. These plans then become a basis for the transmission capital budget and future facility construction. Each year the plans for the next ten years are developed by first determining the requirements for the tenth year, and then defining the additions required for each of the preceding nine years. Needs for specific projects are incorporated in these ten-year plans.

G. Regional Coordinated Planning

1. Western Electricity Coordinating Council (WECC)

APS is a member of the Western Electricity Coordinating Council. The focus of the WECC is on promoting the reliability of the interconnected bulk electric system. The WECC provides the means for:

- Developing regional planning and operating criteria.
- Coordinating future plans.
- Compiling regional data banks for use by the member systems and the WECC in conducting technical studies.
- Assessing and coordinating operating procedures and solutions to regional problems.

- Establishing an open forum with interested non-project participants to review the plan of service for a project.

2. Joint Studies

In many instances, EHV projects can serve the needs of several utilities, IPPs, or both. To this end, joint study efforts may be undertaken. Such joint study efforts endeavor to develop a plan that will meet the needs and desires of all individual companies involved.

H. Load Projections

APS substation load projections are based on the APS Corporate Load Forecast. Substation load projections for neighboring interconnected utilities or power agencies operating in the WECC area are based on the latest data in WECC coordinated study cases. Heavy summer loads are used for the studies.

I. Alternative Evaluations

1. General

In evaluating several alternative plans, comparisons of power flows, transient stability tests, and fault levels are made first. After the alternatives are found that meets the system performance criteria in each of these three areas comparisons may be made of the losses, transfer capability, impact on system operations, and reliability of each of the plans. Finally, the costs of facility additions (capital cost items), costs of losses, and relative costs of transfer capabilities are determined. A brief discussion of each of these considerations follows.

2. Power Flow Analyses

Power flows of base case (all lines in-service) and single contingency conditions are tested and should conform to the system performance criteria set forth in Section IV of these Guidelines. Double or multiple contingencies are examined, but in general, no facilities are planned for such conditions. Normal system voltages, voltage deviations, and voltage extreme limitations are based upon operating experience resulting in acceptable voltage levels to

the consumer. Power flow limits are based upon the thermal ratings and/or sag limitations of conductors or equipment, as applicable.

3. Transient Stability Studies

   Stability guidelines are established to maintain system stability for single contingency, three-phase fault conditions. Double or multiple contingencies are examined, but in general, no facilities are planned for such conditions.

4. Short Circuit Studies

   Three-phase and single-phase-to-ground fault studies are performed to ensure the adequacy of system protection equipment to clear and isolate faults.

5. Losses Analyses

   A comparison of individual element and overall transmission system losses are made for each alternative plan being studied. The losses computed in the power flow program consist of the I^2R losses of lines and transformers and the core losses in transformers, where represented.

6. Transfer Capability Studies

   In evaluating the relative merits of one or more EHV transmission plans, both simultaneous and non-simultaneous transfer capability studies are performed to determine the magnitude of transfer capabilities between areas or load centers.

7. Subsynchronous Resonance (SSR)

   SSR phenomenon result from the use of series capacitors in the network where the tuned electrical network exchanges energy with a turbine generator at one or more of the natural frequencies of the mechanical system. SSR countermeasures are applied to prevent damage to machines as a result of transient current or sustained oscillations following a system disturbance. SSR studies are not used directly in the planning process. SSR countermeasures are determined after the transmission plans are finalized.

8. Economic Evaluation

   In general, an economic evaluation of alternative plans consists of a cumulative present worth or equivalent annual cost comparison of capital costs.

III. PLANNING ASSUMPTIONS

A. General

1. Loads

Loads used for the APS system originate from the latest APS Corporate Load Forecast. In most cases, the corrected power factor of APS loads is 99.5% at 69kV substations.

2. Generation and Other Resources

Generation dispatch is based on firm power and/or transmission wheeling contracts including network resources designations.

3. Normal Voltage Levels

a. Nominal EHV design voltages are 500kV, 345kV, 230kV, and 115kV.

b. Nominal EHV operating voltages are 535kV, 348kV, 239kV, and 119kV.

4. Sources of Databases

WECC Heavy Summer base cases are the sources of the databases. Loop flow (unscheduled flow), of a reasonable amount and direction, will be allowed for use in planning studies.

5. Voltage Control Devices

Devices which can control voltages are shunt capacitors, shunt reactors, tap-changing-under-load (TCUL) and fixed-tap transformers, static VAR compensators, and machine VAR capabilities. If future voltage control devices are necessary, these devices will be evaluated based upon economics and the equipment's ability to obtain an adequate voltage profile on the EHV and HV systems.

6. Phase Shifters

In general, where phase shifters are used, schedules are held across the phase shifter in base case power flows and the phase shifter angle is held in the outage cases.

7. Conductor Sizes

Existing EHV voltages utilized by APS are 230kV, 345kV, and 500kV. It is presently planned that the 345kV transmission system will not be expanded,

thus all future APS EHV lines will be 500kV or 230kV. Planned 500kV lines will initially be modeled using tri-bundled 1780 kCM ACSR conductor (Chukar) with a flat phase spacing of 32 ft./32 ft./64 ft. between phases, unless otherwise specified. Preferred construction for 230kV lines consists of 954 ACSS conductor on steel poles.

8. 69kV System Modeling

   230kV facility outages may result in problems to the underlying 69kV system due to the interconnection of those systems. For this reason, power flow cases include a detailed 69kV system representation. Solutions to any problems encountered on the 69kV system are coordinated with the subtransmission planning engineers.

9. Substation Transformers

   a. Bulk substation transformer banks may be made up of one three-phase or three single-phase auto-transformers, depending upon bank size and economics. For larger banks where single-phase transformers are used, a fourth (spare) single-phase transformer will be used in a jack-bus arrangement to improve reliability and facilitate connection of the spare in the event of an outage of one of the single-phase transformers. TCUL will be considered in the high voltage windings, generally with a range of plus or minus 10%. High voltage ratings will be 500kV or 345kV class and low voltage windings will be 230kV, 115kV, or 69kV class.

   b. For high-density load areas, both 230/69kV and 69/12.5kV transformers can be utilized. 230/69kV transformers will be rated at 113/150/188 MVA with a 65°C temperature rise, unless otherwise specified. 69/12.5kV transformers will be rated at 25/33/41 MVA with a 65°C temperature rise, unless otherwise specified. 188 MVA transformers are utilized in future 230/69kV substations up to a 200 MVA load level. Beyond the 200 MVA load level, the economic sizes of 230/69kV transformers to serve the load are as follows:

1) Add the third 188 MVA transformer if the load potential is expected to be 400 MVA or less.
2) If the load potential is expected to exceed 400 MVA then another 230/69kV substation will be built.

With all elements in service, a transformer may be loaded up to its top Forced Oil Air (FOA) rating without sustaining any loss of service life. For a single contingency outage (loss of one transformer) the remaining transformer or transformers may be loaded up to 20% above their top FOA rating, unless heat test data indicate a different overload capability. The loss of service life sustained will depend on the transformer pre-loading and the outage duration. Tap setting adjustment capabilities on 230/69kV transformers will be ±5% from the nominal voltage setting (230/69kV) at 2½% increments.

10. Switchyard Arrangements

a. 500kV and 345kV Substations

Existing 345kV switchyard arrangements use breaker-and-one-half, main-and-transfer, or modified paired-element circuit breaker switching schemes. Because of the large amounts of power transferred via 500kV switchyards and the necessity of having adequate reliability, all 500kV circuit breaker arrangements are planned for an ultimate breaker-and-one-half scheme. If only three or four elements are initially required, the circuit breakers are connected in a ring bus arrangement, but physically positioned for a breaker-and-one-half scheme. The maximum number of elements to be connected in the ring bus arrangement is six. System elements such as generators, transformers, and lines will be arranged in breaker-and-one-half schemes such that a failure of a center breaker will not result in the loss of two lines routed in the same general direction and will minimize the impact of losing two elements.

b. 230kV Substations

Future 230/69kV substations should be capable of serving up to 564 MVA of load. 400 MVA has historically been the most common substation load level in the Phoenix Metropolitan area. Future 230/69kV substations should accommodate up to four 230kV line terminations and up to three 230/69kV transformer bays. Based upon costs, as well as reliability and operating flexibility considerations, a breaker-and-one-half layout should be utilized for all future 230/69kV Metropolitan Phoenix Area substations, with provision for initial development to be a ring bus. Any two 230/69kV transformers are to be separated by two breakers so that a stuck breaker will not result in an outage of both transformers.

11. Series Capacitor Application

Series capacitors may be used on EHV lines to increase system stability, for increased transfer capability, and/or for control of power flow. The series capacitors may be lumped at one end of a line because of lower cost; however, the capacitors are generally divided into two banks, one at either end of a line, for improved voltage profile.

12. Shunt and Tertiary Reactor Application

Shunt and/or tertiary reactors may be installed to prevent open end line voltages from being excessive, in addition to voltage control. The open end line voltage must not be more than 0.05 per unit voltage greater than the sending end voltage. Tertiary reactors may also be used for voltage and VAR control as discussed above.

B. Power Flow Studies

1. System Stressing

Realistic generation capabilities and schedules should be used to stress the transmission system in order to maximize the transfer of resources during the maximum load condition.

2. Displacement

In cases where displacements (due to power flow opposite normal generation schedules) may have an appreciable effect on transmission line loading, a reasonable amount of displacement (Generation Units) may be removed.

C. Transient Stability Studies

1. Fault Simulation

When studying system disturbances caused by faults, two conditions will be simulated:

a. Three-phase-to-ground faults, and
b. Single-line-to-ground faults with a stuck circuit breaker in one phase with back-up delayed clearing.

2. Margin

a. Generation margin may be applied for the contingencies primarily affected by generation, or
b. Power flow margin may be applied for the contingencies primarily affected by power flow.

3. Unit Tripping

Generator unit tripping may be allowed in-order to increase system stability performance.

4. Machine Reactance Representation

For transient stability studies, the unsaturated transient reactance of machines with full representation will be used.

5. Fault Damping

Fault damping will be applied to the generating units adjacent to faults. Fault damping will be determined from studies that account for the effect of generator amortisseur windings and the SSR filters.

6. Series Capacitor Switching

Series capacitors, locations to be determined from short circuit studies, will be flashed and reinserted as appropriate.

D. Short Circuit Studies

Three-phase and single-phase-to-ground faults will be evaluated.

1. Generation Representation

All generation will be represented.

2. Machine Reactance Representation

The saturated subtransient reactance (X''_d) values will be used.

3. Line Representation

The transmission line zero sequence impedance (X_0) is assumed to be equal to three times the positive sequence impedance (X_1).

4. Transformer Representation

The transformer zero sequence impedance (X_0) is assumed to be equal to the positive sequence impedance (X_1). Bulk substation transformers are modeled as auto-transformers. The two-winding model is that of a grounded-wye transformer. The three-winding model is that of a wye-delta-wye with a solid ground.

IV. SYSTEM PERFORMANCE

A. Power Flow Studies

1. Normal (Base Case Conditions)

a. Voltage Levels

1) General

(a) 500kV bus voltages will be maintained between 1.05 and 1.08 p.u. on a 500kV base.

(b) 345kV bus voltages will range between .99 and 1.04 p.u. on the 345kV system.

(c) 500kV and 345kV system voltages are used to maintain proper 230kV bus voltages.

(d) Voltage on the 230kV and 115kV system should be between 1.01 p.u. and 1.05 p.u.

(e) Tap settings for 230/69kV and 345/69kV transformers should be used to maintain low side (69kV) voltages of 1.03 to 1.04 p.u. Seasonal tap changes may be required.

2) Specific Buses

(a) APS Pinnacle Peak 230kV bus voltage should be between 1.025 p.u. and 1.035 p.u.

(b) APS Westwing 230kV bus voltage should be between 1.04 p.u. and 1.05 p.u.

(c) Saguaro 115kV bus voltage will be approximately 1.035 p.u.

(d) Voltage at the Prescott (DOE) 230kV bus should be approximately 1.02 p.u.

b. Facility Loading Limits

1) Transmission Lines

Transmission line loading cannot exceed 100% of the continuous rating, which is based upon established conductor temperature limit or sag limitation.

2) Underground Cable

Underground cable loading should not exceed 100% of the continuous rating with all elements in service. This rating is based on a cable temperature of 85°C with no loss of cable life.

3) Transformers

Transformers cannot exceed 100% of top FOA, 65°C rise, nameplate ratings.

4) Series Capacitors

Series Capacitors cannot exceed 100% of continuous rating.

c. Interchange of VARs

Interchange of VARs between companies at interconnections will be reduced to a minimum and maintained near zero.

d. Distribution of Flow

Schedules on a new project will be compared to simulated power flows to ensure a reasonable level of flowability.

2. Single Contingency Outages

a. Voltage Levels

Maximum voltage deviation on APS' major buses cannot exceed 5%. This deviation level yields a close approximation to the post-transient VAR margin requirements of WECC.

b. Facilities Loading Limits

1) Transmission Lines

Transmission line loading cannot exceed 100% of the lesser of the sag limit or the emergency rating (30-minute rating) which is based upon established conductor temperature limits.

2) Underground Cable

Underground cable loading should not exceed the emergency rating during a single-contingency outage. This rating is based on a cable temperature of 105°C for two hours of emergency operation with no loss of cable life.

3) Transformers

Transformers cannot exceed 120% of top FOA, 65°C rise, nameplate ratings.

4) Series Capacitors

Series Capacitors cannot exceed 100% of emergency rating.

c. Generator Units

Generator units used for controlling remote voltages will be modified to hold their base case terminal voltages.

d. Impact on Interconnected System

Single contingency outages will not cause overloads upon any neighboring transmission system.

B. Transient Stability Studies

Transient stability studies are primarily performed on the 500kV and 345kV systems.

1. Fault Simulation

Three-phase-to-ground faults and single-line-to-ground faults, simulating a stuck circuit breaker in one phase with back-up delayed clearing will be simulated. Fault clearing times of four cycles after fault inception (5 cycles for a 230kV fault) and a back-up clearing time of twelve cycles after fault inception is utilized. System elements are switched out at the appropriate clearing times, as applicable. Fault damping will be applied when applicable at fault inception.

2. Series Capacitor Switching

Series capacitors, at locations determined from short-circuit studies, will be flashed at fault inception and will be reinserted depending on their reinsertion types.

3. System Stability

The system will be considered stable if the following conditions are met:

a. All machines in the system remain synchronized as demonstrated by the relative rotor angles.

b. System damping exists as demonstrated by the damping of relative rotor angles and the damping of voltage magnitude swings. Voltages for the first swing after fault clearing should not drop below 75% of pre-fault value with maximum time duration of 20 cycles for voltage dip exceeding 20%.

4. Re-closing

Automatic re-closing of circuit breakers controlling EHV facilities is not utilized.

C. Short Circuit Studies

Fault current shall not exceed 100% of the substation fault current interruption capability for three-phase or single-line-to-ground faults.

2003 SYSTEM RATING MAPS

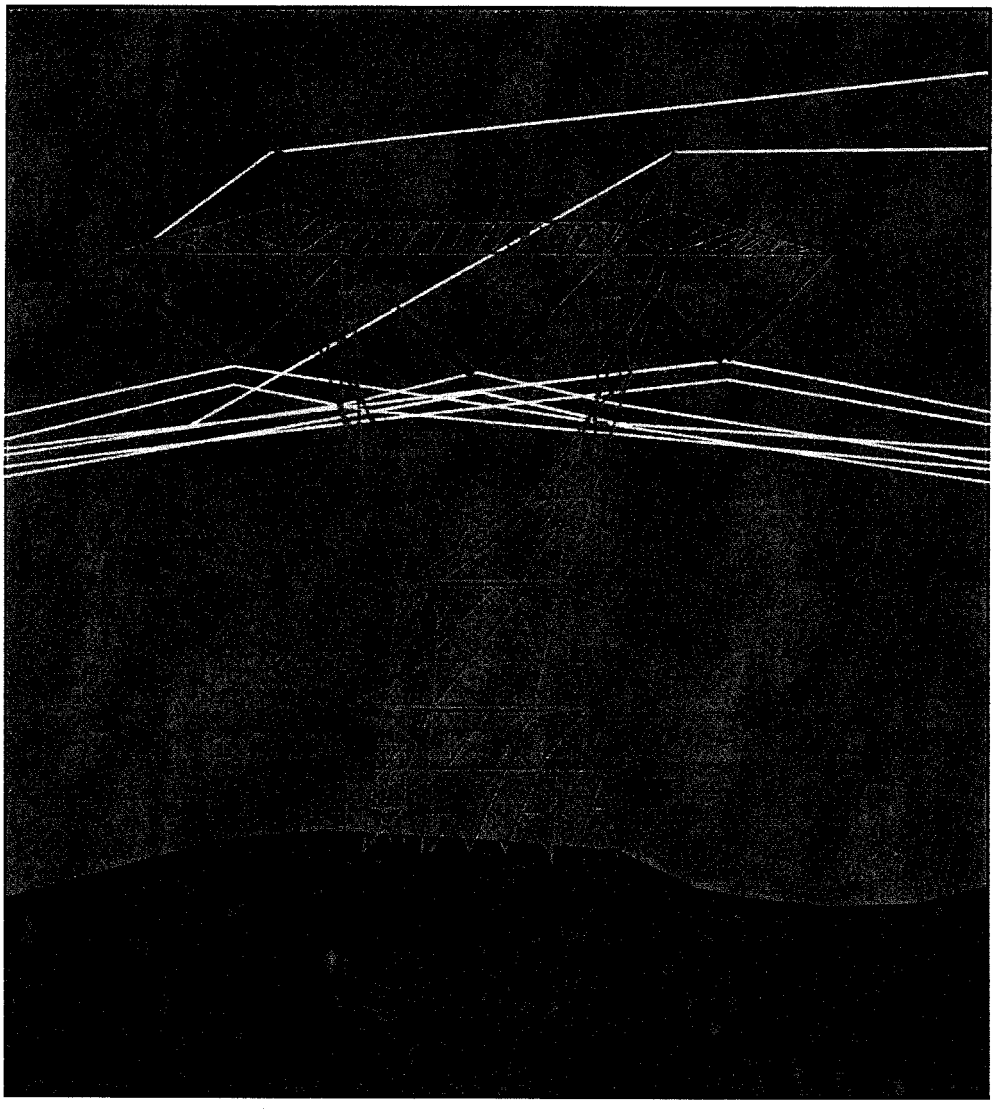

Prepared By

Transmission Operations
June, 2003

TABLE OF CONTENTS

LEGEND ---------- 1

EHV CONTINUOUS ---------- 2

EHV EMERGENCY ---------- 4

METRO 230kV CONTINUOUS ---------- 6

METRO 230kV EMERGENCY ---------- 7

NORTHERN 230kV CONTINUOUS ---------- 8

NORTHERN 230kV EMERGENCY ---------- 9

SOUTHERN 230kV CONTINUOUS ---------- 10

SOUTHERN 230kV EMERGENCY ---------- 11

LEGEND
SYSTEM RATING MAPS

SYMBOL	DESCRIPTION
###	CURRENT LIMIT IN AMPS
—— ### ——	LIMITING ELEMENT
###	CONDUCTOR LIMIT IN AMPS
	TRANSFORMER LIMITS ARE IN MVA
————————	OVERHEAD TRANSMISSION LINE
— — — — — —	UNDERGROUND CABLE
M	MOTOR OPERATED SWITCH
V	VACCUM SWITCH
H	HYDRAULIC SWITCH
1	BREAKER NUMBER

EHV-1
CONTINUOUS RATINGS

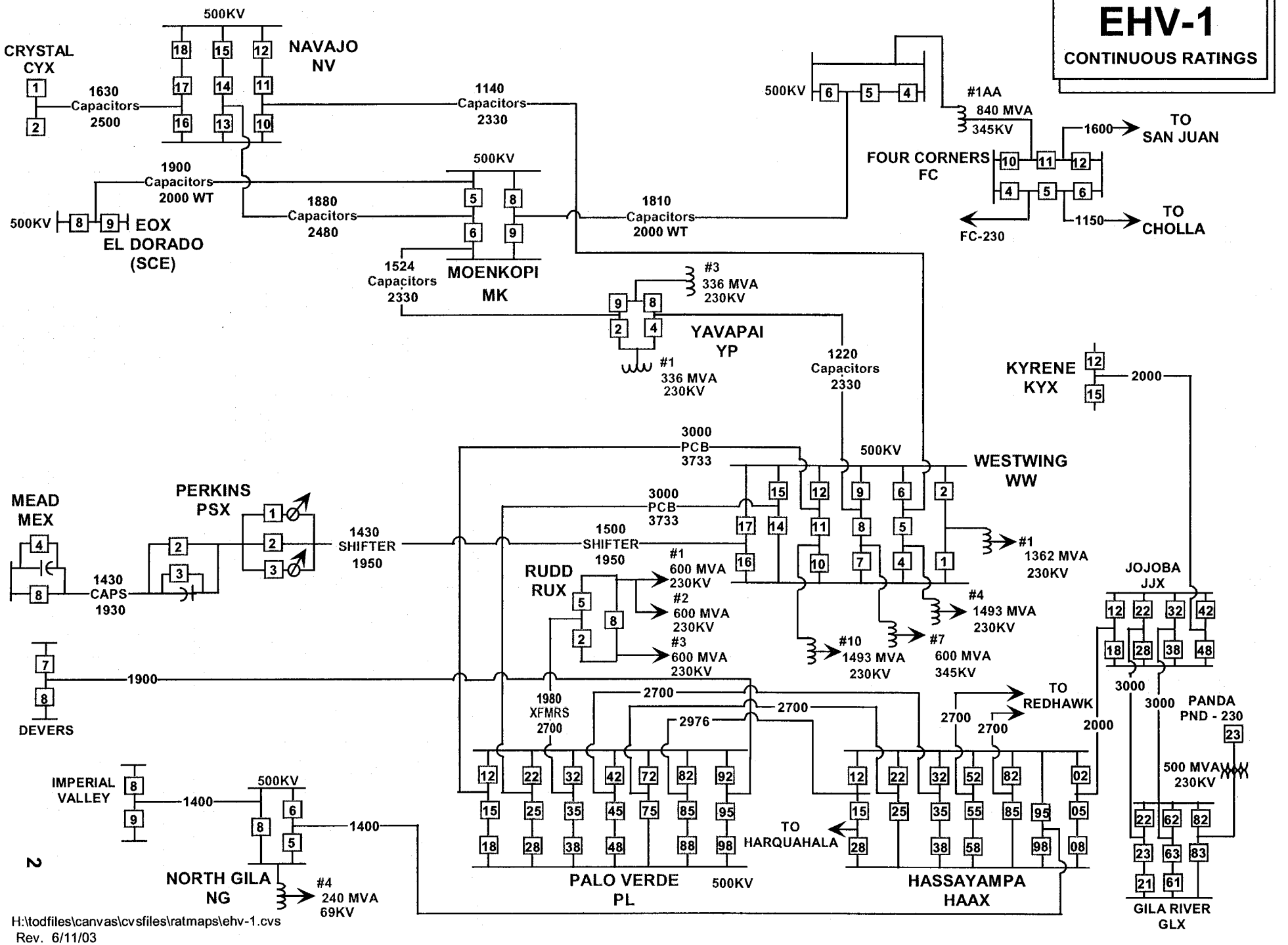

H:\todfiles\canvas\cvsfiles\ratmaps\ehv-1.cvs
Rev. 6/11/03

EHV-2
CONTINUOUS RATINGS

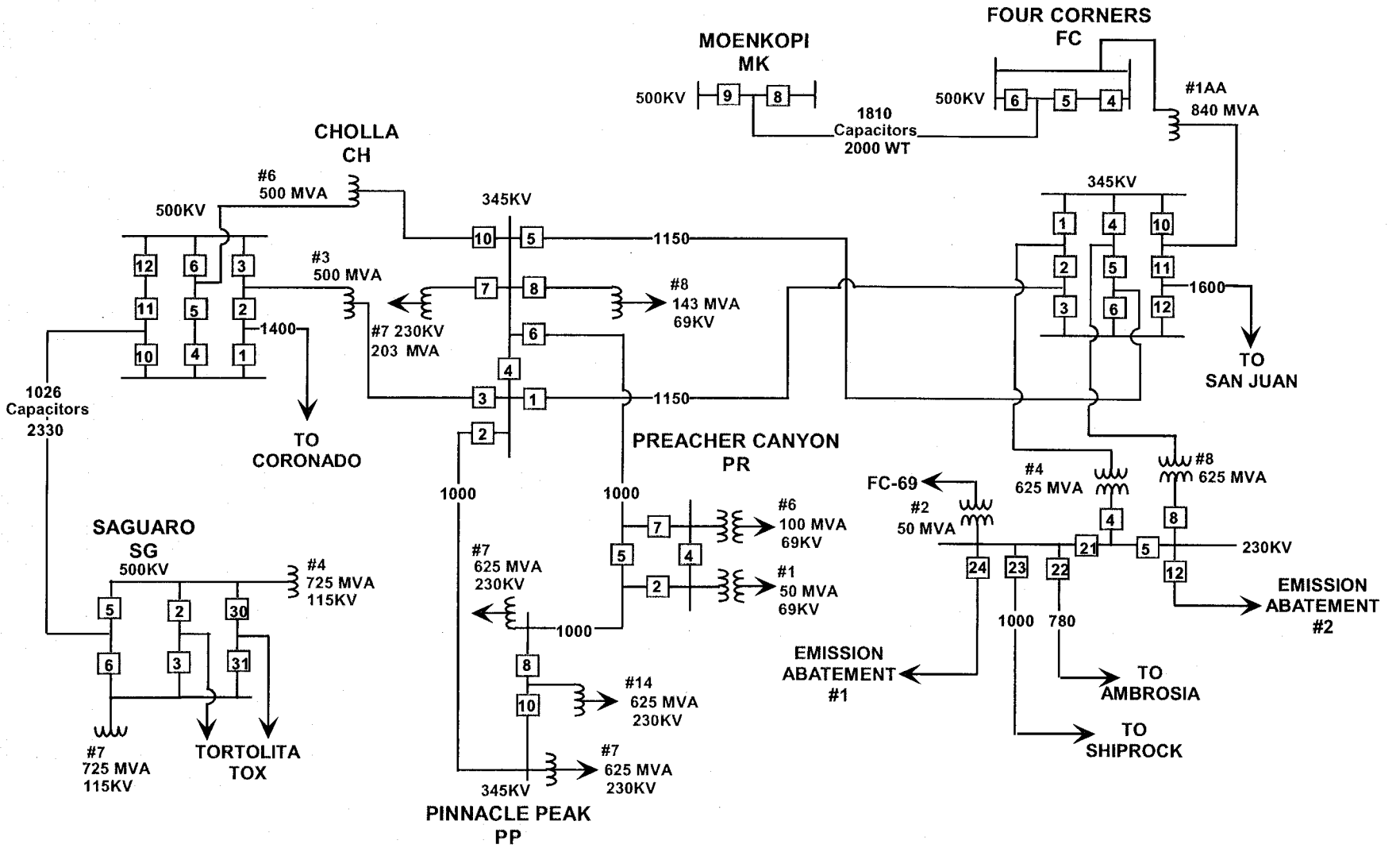

H:\todfiles\canvas\cvsfiles\ratmaps\ehv-2.cv5
Rev. 06/11/03

EMERGENCY RATING (AMPS)

EHV-1
EMERGENCY RATINGS

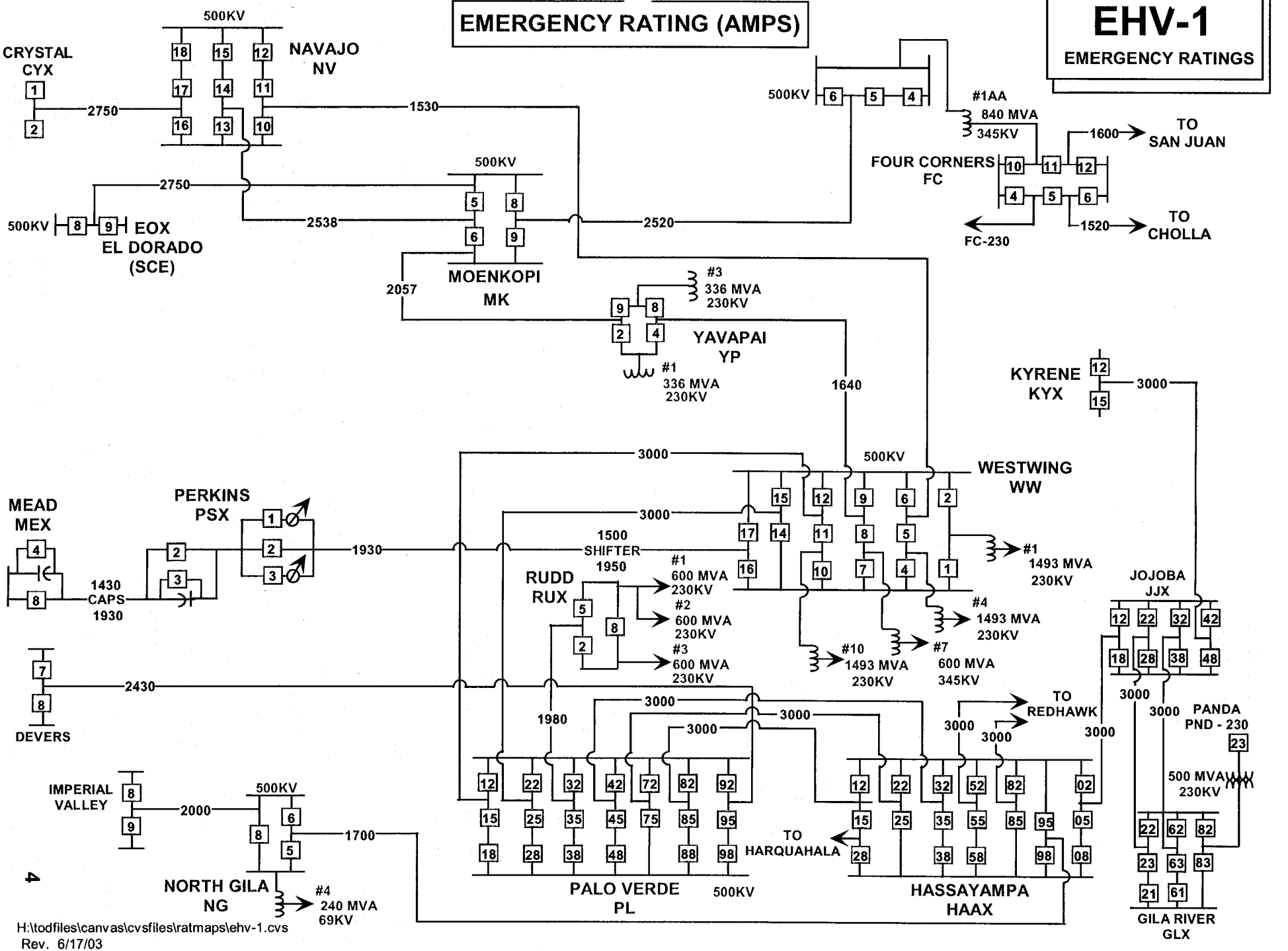

H:\todfiles\canvas\cvsfiles\ratmaps\ehv-1.cvs
Rev. 6/17/03

EHV-2

EMERGENCY RATINGS

EMERGENCY RATING (AMPS)

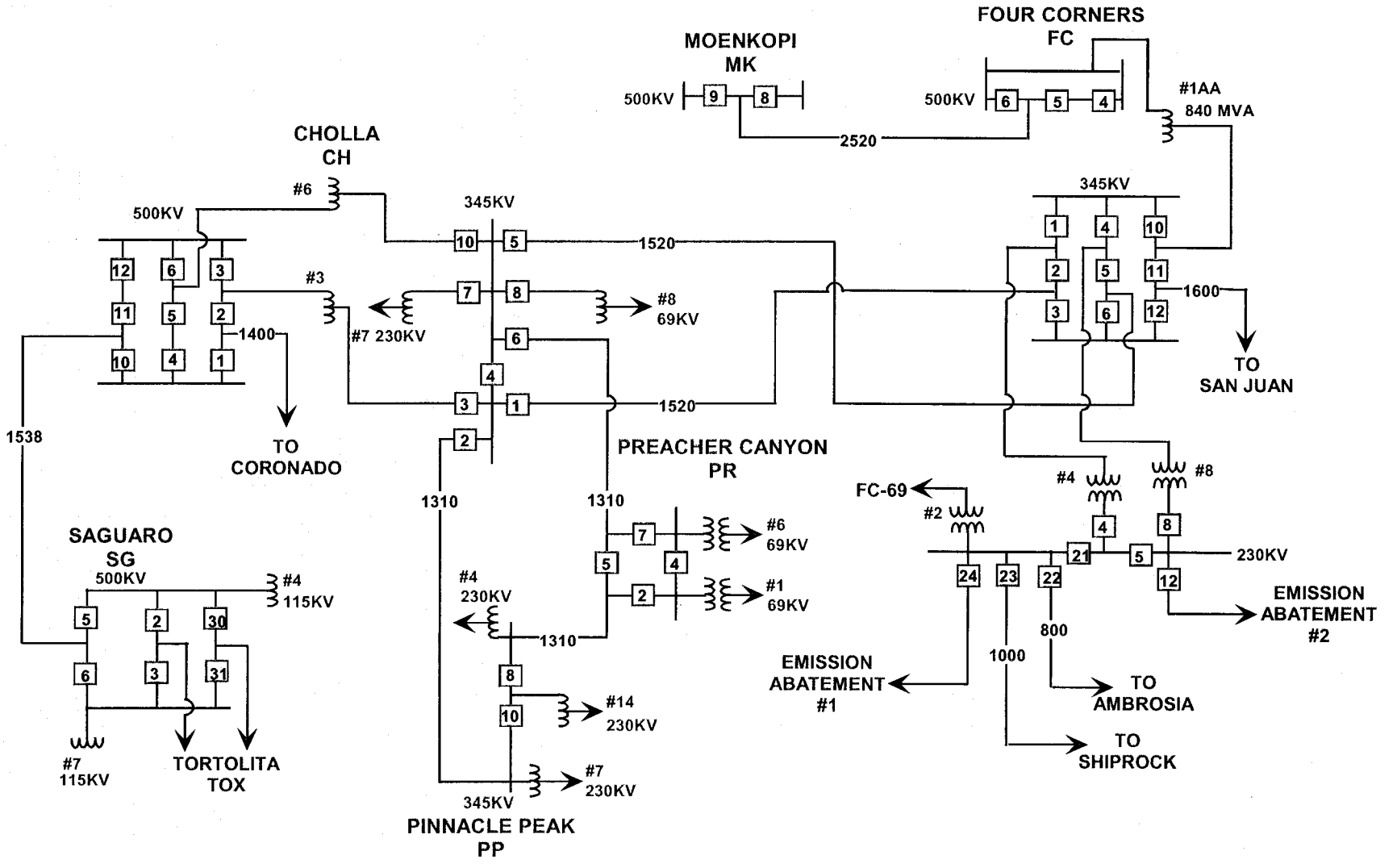

H:\todfiles\canvas\cvsfiles\ratmaps\ehv-2.cv5
Rev. 06/17/03

METRO 230KV

CONTINUOUS RATINGS

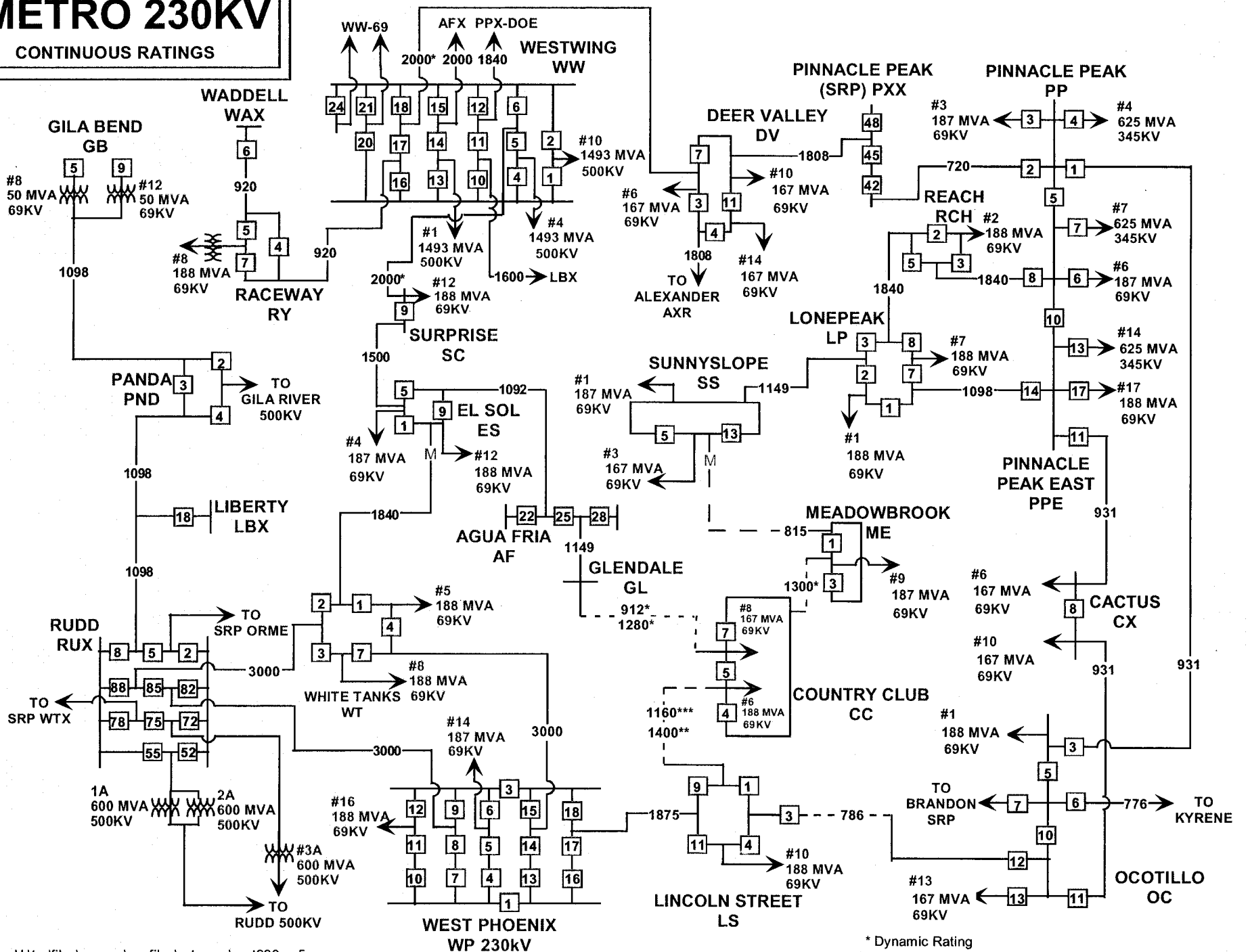

* Dynamic Rating
** No forced cooling on GT-CC, Cooling both ends LS-CC
*** Forced cooling on GT-CC, Cooling one end LS-CC

H:\todfiles\canvas\cvsfiles\ratmaps\met230.cv5
Rev. 06/12/03

METRO 230KV

EMERGENCY RATINGS

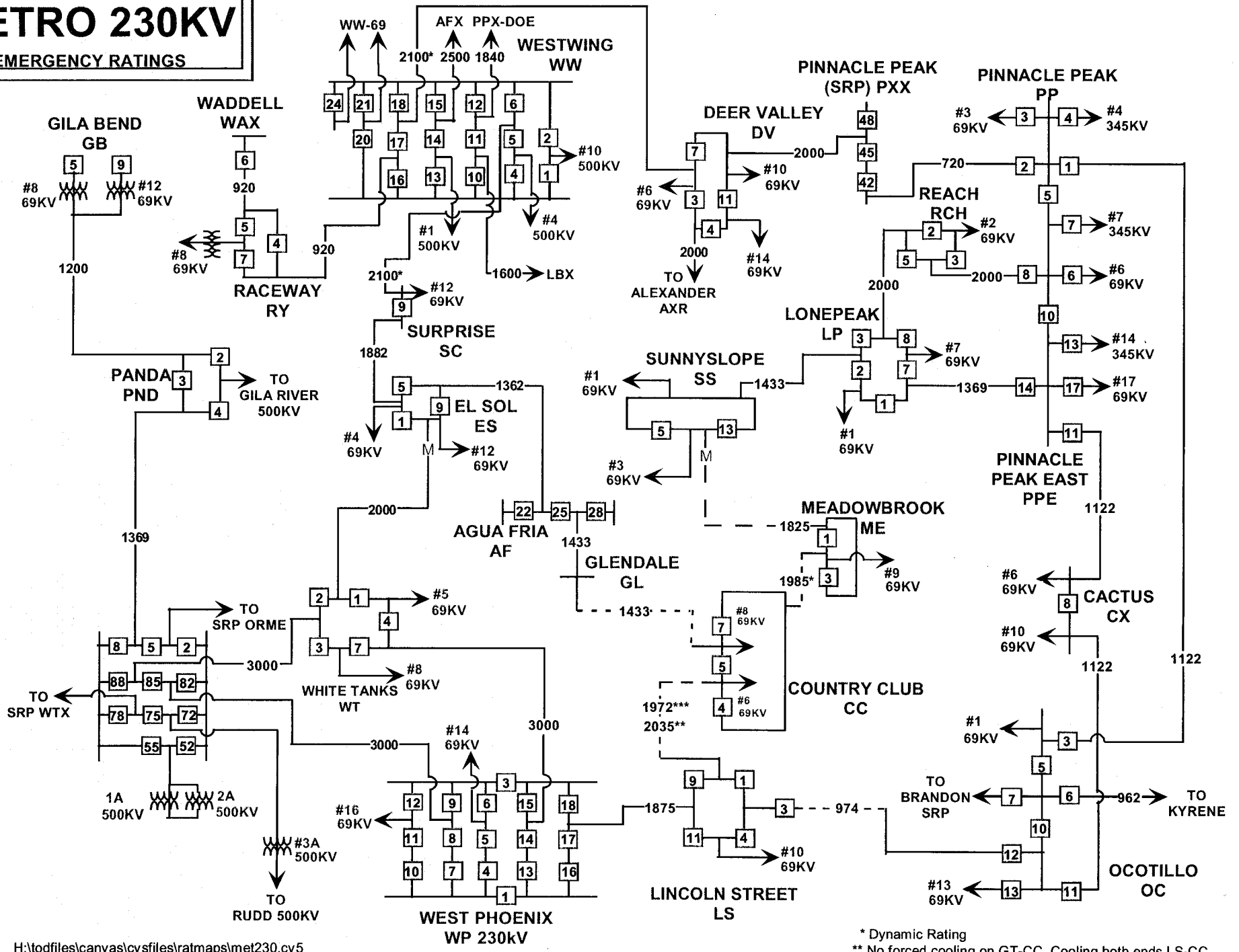

* Dynamic Rating
** No forced cooling on GT-CC, Cooling both ends LS-CC
*** Forced cooling on GT-CC, Cooling one end LS-CC

H:\todfiles\canvas\cvsfiles\ratmaps\met230.cv5
Rev. 06/17/03

NORTHERN 230KV

CONTINUOUS RATINGS

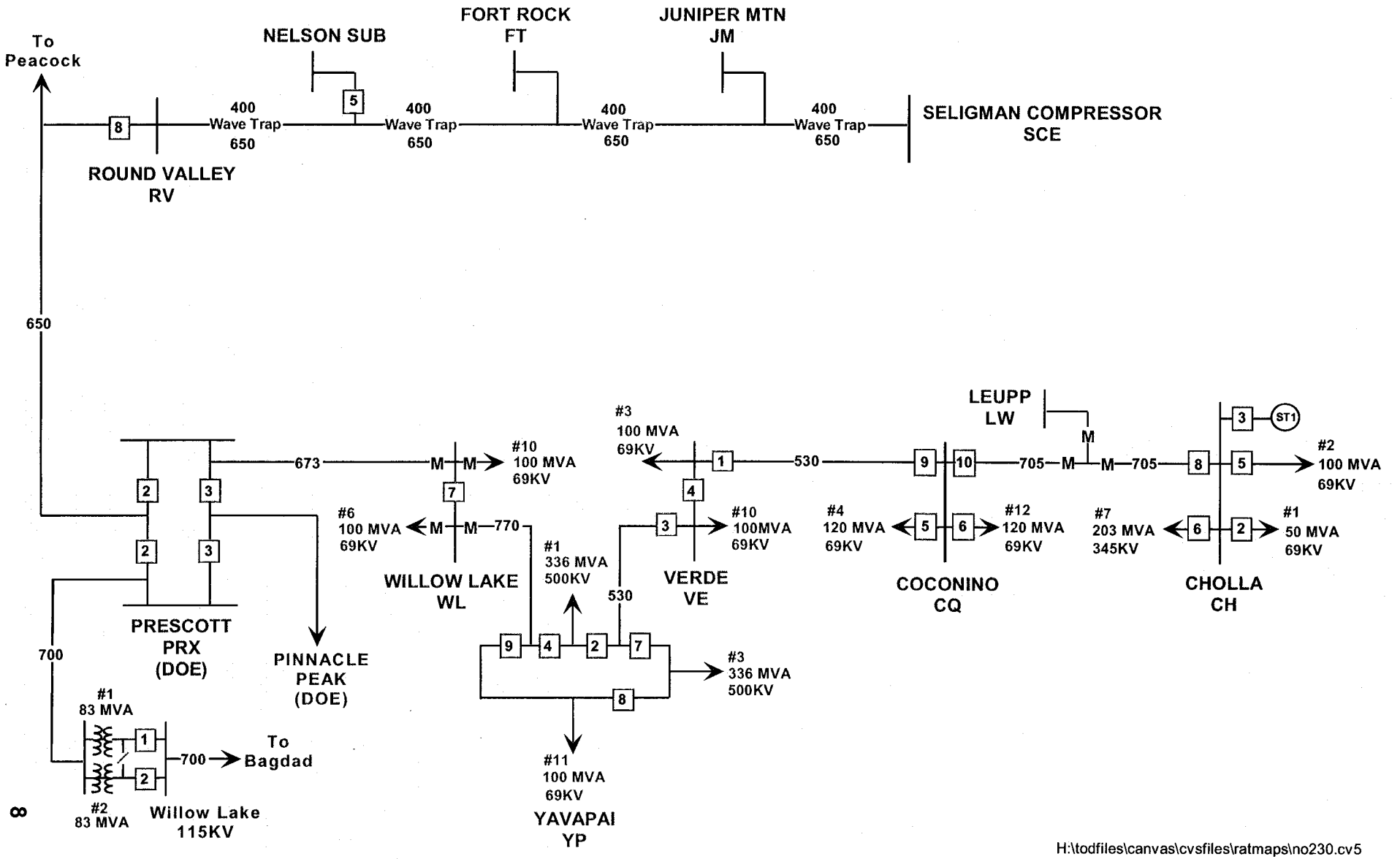

H:\todfiles\canvas\cvsfiles\ratmaps\no230.cv5
Rev. 06/19/03

NORTHERN 230KV

EMERGENCY RATINGS

EMERGENCY RATING (AMPS)

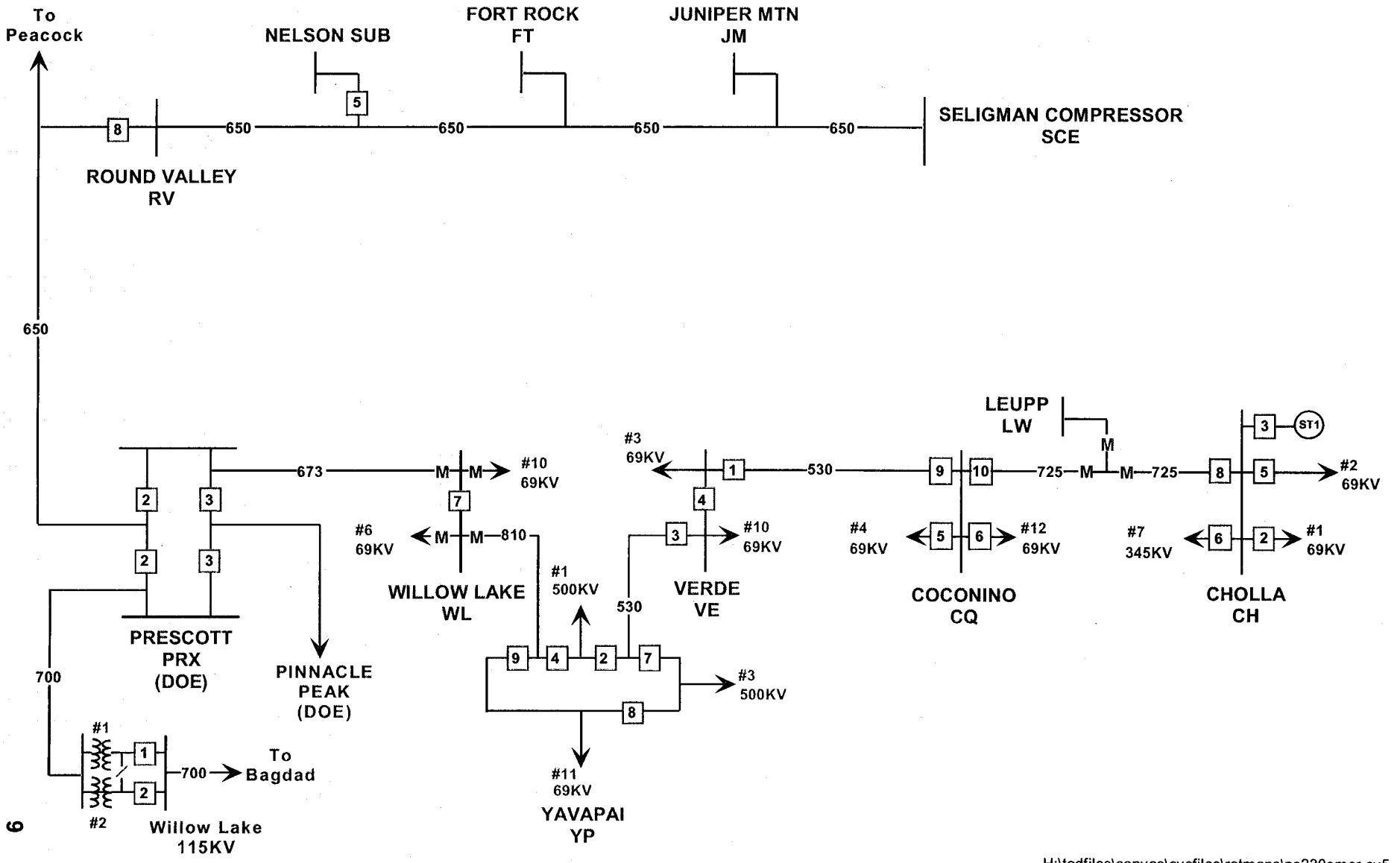

H:\todfiles\canvas\cvsfiles\ratmaps\no230emer.cv5
Rev. 06/12/03

SOUTHERN 230KV

CONTINUOUS RATINGS

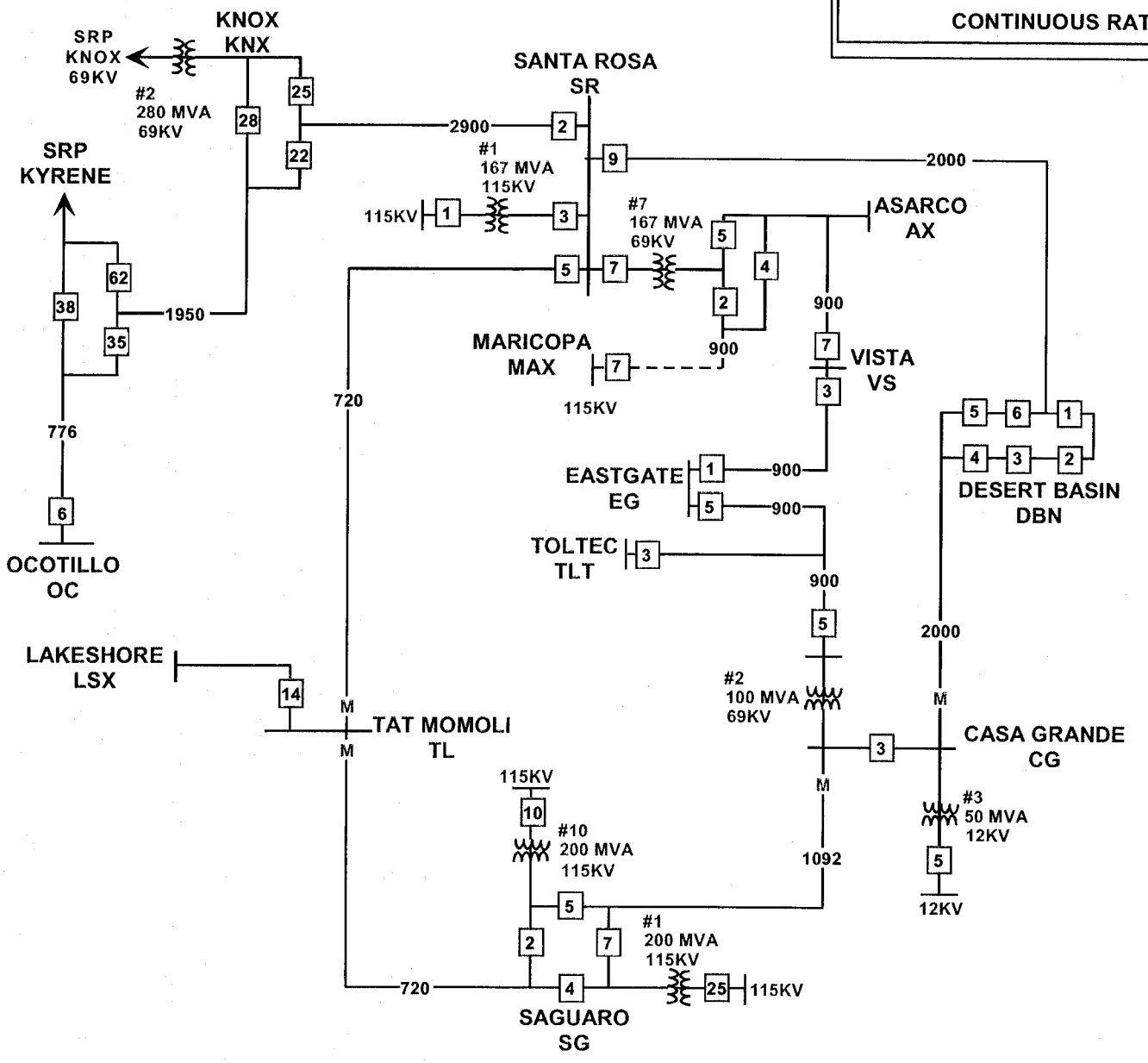

H:\todfiles\canvas\cvsfiles\ratmaps\no230.cv5
Rev. 06/17/03

SOUTHERN 230KV

EMERGENCY RATINGS

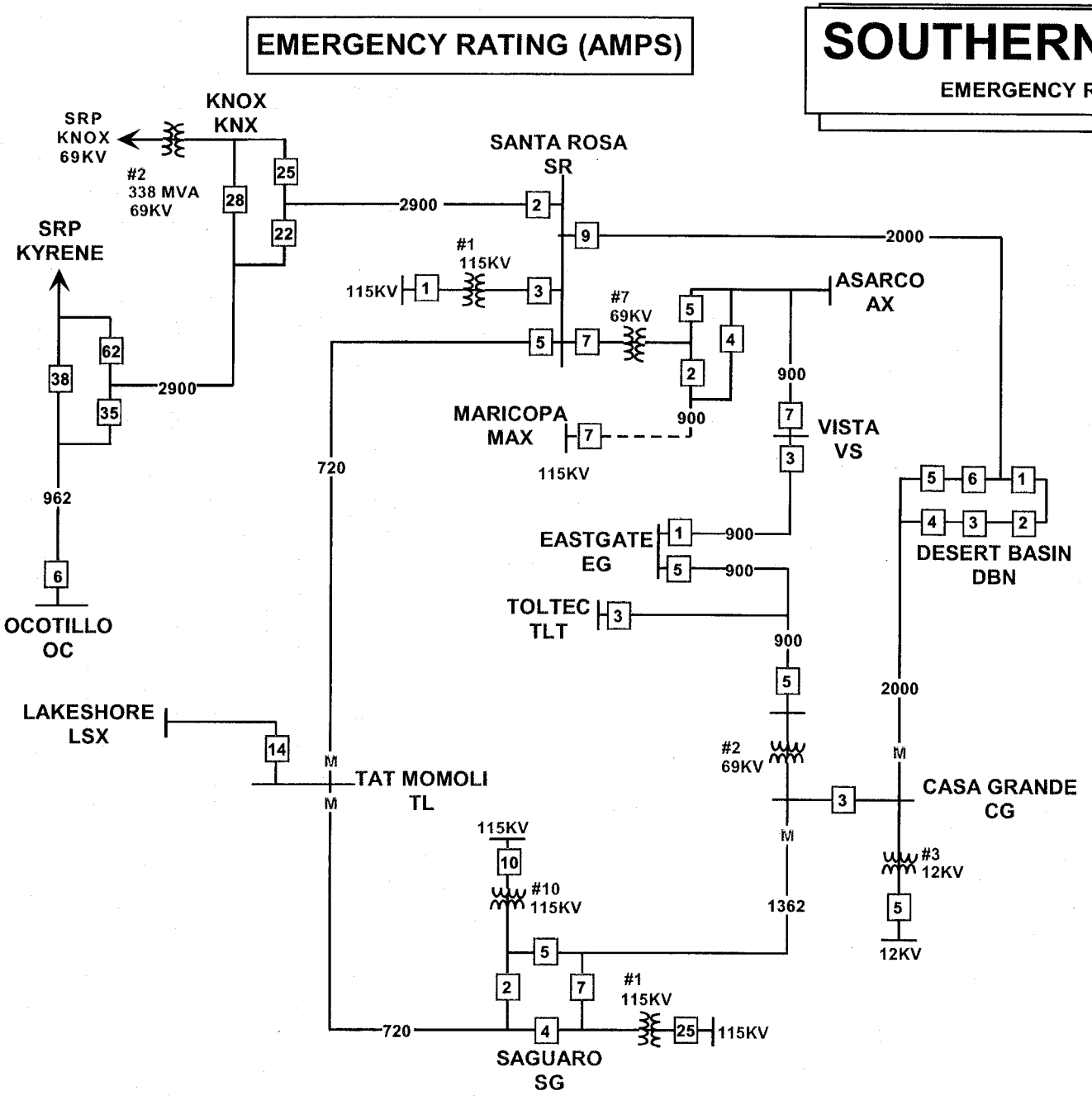

H:\todfiles\canvas\cvsfiles\ratmaps\no230.cv5
Rev. 06/17/03

ARIZONA PUBLIC SERVICE COMPANY

TEN-YEAR PLAN

2004 – 2013

TECHNICAL STUDY REPORT

FOR

THE ARIZONA CORPORATION COMMISSION

JANUARY 2004

Table of Contents

	Page
1. Introduction	1
2. Power Flow Analyses	1
3. Stability Analysis	3

Appendices

A. Power Flow Maps	A1-A40
B. 2006 Stability Plots	B1-B30
C. 2012 Stability Plots	C1-C31
D. Loop-in of the Jojoba-Kyrene 500-kV line into Rudd	D1

ARIZONA PUBLIC SERVICE COMPANY
2004-2013
TEN-YEAR PLAN
TECHNICAL STUDY REPORT

I. Introduction

This technical study report is filed with the ACC pursuant to A.R.S. § 40-360.02, as amended by House Bill 2040, and Arizona Corporation Commission ("Commission") Decision No. 63876 (July 25, 2001) regarding the Biennial Transmission Assessment prepared by Commission Utilities Division Staff.

Two aspects of technical studies were performed and reported here. They are power flow analyses and stability analyses. Power flow analysis was performed for two scenarios. The first is for all transmission system elements being in service. All system elements must be within its continuous rating. The second scenario is for outage of a single element. All remaining system elements must remain within its emergency ratings. Voltage deviations for these scenarios must also be within established guidelines. These voltage deviation guidelines closely approximate post-transient var margin requirements of the Western Electricity Coordinating Council. More detail is provided in APS' Transmission Planning Process and Guidelines, which is also included in this filing.

The stability analyses were performed to simulate electrical disturbances on the transmission system and evaluate the system response. The desired result is that all generators will remain on line, no additional lines will open, and the system oscillations will damp out.

Results of the power flow and stability analyses aid in determining when and where new electrical facilities are needed because of reliability or security reasons. Additionally, some facilities are planned to address adequacy concerns. These include the interconnection of generation to the transmission system or efforts to increase import capability to load-constrained or other areas.

II. Power Flow Analyses

Power flow cases were created for each year of the 2004-2013 study time frame. These cases represent the latest transmission and sub-transmission plans, load projections, and resource plans of utilities and independent power producers. Base case and single contingency conditions are evaluated to determine system needs and timing. Various iterations of possible solutions lead to the final plans for transmission additions.

The single contingency analysis involves simulations for every non-radial 115kV or above line that APS owns, partially owns, or operates. Transformer outages are also evaluated. Results of the power flow studies are tabulated in a Security Needs Table and an Adequacy Needs Table, below. These tables identify sixteen transmission

lines/projects that are included in this Ten-Year Plan filing. Some of the projects were classified as Adequacy Needs because of the uncertainty of generation location, size, and availability in the later years. As projects near the five-year planning time frame, they may be redefined as Security Needs projects. Selected maps of the power flow simulations are contained in the appendix.

Security Needs Table

Transmission Project	In Service Year	Critical Outage	Limiting Element
Loop-in of Pinnacle Peak-Prescott 230kV line to Gavilan Peak 230kV substation	2005	Jomax-Dove Valley 69kV line	Voltage deviation @ Dove Valley 69kV & load loss @ Gavilan Peak 69kV and Dove Valley 69kV.
Rudd-TS3 230kV line & TS4-TS3 230kV line.	2006	White Tanks 230/69kV transformer or local 69kV lines	White Tanks 230/69kV xfmr #2 & voltage deviation @ White Tanks & 69kV system busses
TS1-TS2-TS3 230kV lines	2008	Loss of Surprise 230/69kV transformer or loss of Westwing 230/69kV transformer or local 69kV lines	Surprise 230/69kV transformer, Westwing 230/69kV transformer, and local 69kV lines
Raceway-Avery 230kV line	2008	Raceway transformer & local 69kV lines	Voltage deviation @ Avery & 69kV system lines
Loop-in of Coronado-Silver King 500kV line to Second Knoll	2009	Cholla-Zeniff 69kV line or Cholla-Showlow 69kV line	Voltage deviations on the sub-transmission system in the area.
Pinnacle Peak-TS6-Avery 230kV line	2009	Raceway-Avery 230kV line	230/69kV transformers @ Deer Valley, Gavilan Peak, and Pinnacle Peak and voltage deviation @ Avery
Gila Bend-Yuma 230kV line	2010	Palo Verde-N. Gila 500kV line	Voltage deviation @ Yuma & scheduling capacity

Adequacy Needs Table

Transmission Project	In Service Year	System Benefits
Hassayampa-Jojoba-Pinal West 500kV line. Pinal West-Santa Rosa-S.E. Valley 500kV line.	2006-2007	Increases import capability for the Phoenix metropolitan area, increases the export capability from the PV area. Increases transmission system reliability and ability to deliver power.
Loop-in of Cholla-Saguaro 500kV line into Silver King 500kV substation.	2007	Increase transmission system reliability and ability to deliver power. Increases import capability for the Phoenix metropolitan area.
Palo Verde-TS5 500kV. TS5-TS1 230kV.	2007	Increases import capability for the Phoenix metropolitan area, increases the export capability from the PV area. Increase system capacity and reliability to deliver power to the western part of the Phoenix Metropolitan area.
Loop-in of Navajo-Westwing 500kV to Raceway 500kV substation. TS5-Raceway 500kV line.	2010	Increases import capability for the Phoenix metropolitan area, increases the export capability from the PV area. Increase system reliability and ability to deliver power.
Westwing-Raceway 230kV line #2	2010	Increase reliability to Raceway and provide a backup for outage of Westwing 500/230kV transformers.
Gila Bend-TS8 230kV line	2012	Increases import capability for the Yuma area. Increases transmission system reliability and ability to deliver power.
Westwing-El Sol 230kV line	2013	Increase transmission system reliability and ability to deliver power.
Loop-in of Cholla-Pinnacle Peak 345kV to Mazatzal 345kV substation	TBD	Increase transmission system reliability and ability to deliver power.
Palo Verde-Pinal West-Saguaro	TBD	Increase transmission system reliability and ability to deliver power.

III. Stability Analysis

A stability simulation for simulated three-phase faults was performed for 2005 and 2012 for every 345kV or 500kV line that APS owns (totally or partially) or operates. It has been APS' experience that stability concerns do not manifest on the 230kV system, which is primarily designed to deliver power to load. Therefore, no 230kV simulations were performed. Additionally, every new proposed generation plant will be required to

perform stability evaluations prior to receiving permission to interconnect to the transmission system.

Each simulation modeled a 3-phase bus fault, appropriate series capacitor flashing and reinsertion, and fault removal and transmission line removal. System performance was evaluated by monitoring representative generator rotor angles, bus voltages and system frequency. Plots of these system parameters are included in Appendix B. The stability simulations performed to date indicate that no stability problems limit the transmission system.

APPENDIX A

Power Flow Maps

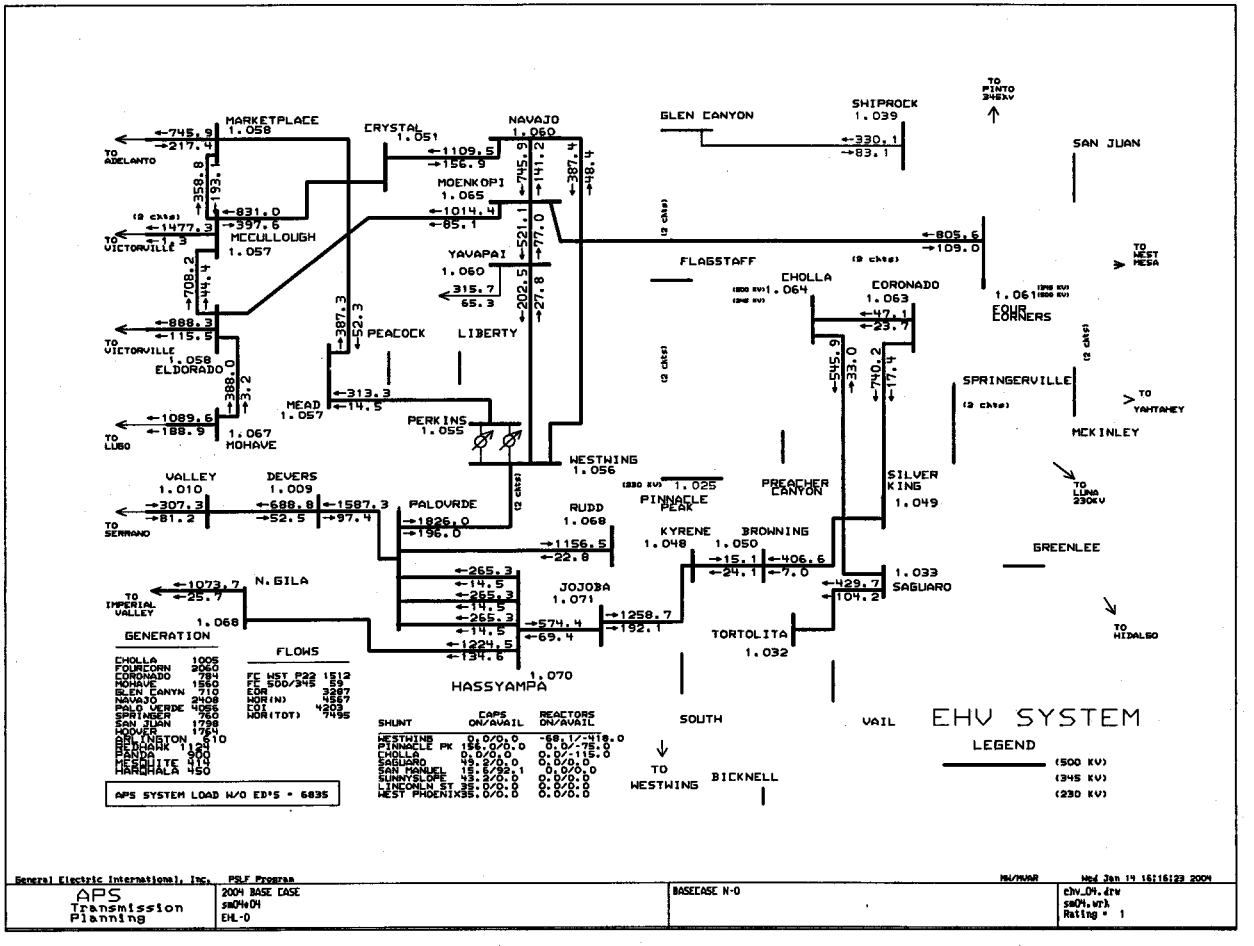
MARKETPLACE 1.058
CRYSTAL 1.051
NAVAJO 1.060
GLEN CANYON
SHIPROCK 1.039
TO PINTO 345KV
SAN JUAN
TO ADELANTO
MOENKOPI 1.065
MCCULLOUGH 1.057
TO VICTORVILLE
YAVAPAI 1.060
FLAGSTAFF
CHOLLA 1.064
CORONADO 1.063
FOUR CORNERS 1.061
TO WEST MESA
PEACOCK
LIBERTY
ELDORADO 1.058
MEAD 1.057
PERKINS 1.055
MOHAVE 1.067
TO LUGO
WESTWING 1.056
SPRINGERVILLE
TO YAHTANEY
MCKINLEY
VALLEY 1.010
DEVERS 1.009
PALOVRDE
RUDD 1.068
PINNACLE PEAK 1.025
PREACHER CANYON
SILVER KING 1.049
TO LUNA 230KV
TO SERRANO
KYRENE 1.048
BROWNING 1.050
GREENLEE
N. GILA
JOJOBA 1.071
SAGUARO 1.033
TO IMPERIAL VALLEY
TORTOLITA 1.032
TO HIDALGO
HASSYAMPA 1.070
SOUTH
VAIL
TO WESTWING
BICKNELL
EHV SYSTEM
LEGEND
(500 KV)
(345 KV)
(230 KV)
GENERATION
CHOLLA 1005
FOURCORN 2060
CORONADO 784
MOHAVE 1560
GLEN CANYN 710
NAVAJO 2408
PALO VERDE 4056
SPRINGER 760
SAN JUAN 1798
HOOVER 1764
ARLINGTON 610
REDHAWK 1124
PANDA 900
MESQUITE 414
HARQUHALA 450
FLOWS
FC WST P22 1512
FC 500/345 59
EOR 3287
WOR(N) 4567
COI 4203
WOR(TOT) 7495
SHUNT CAPS ON/AVAIL REACTORS ON/AVAIL
WESTWING 0.0/0.0 -68.1/-418.0
PINNACLE PK 156.0/0.0 0.0/-75.0
CHOLLA 0.0/0.0 0.0/-115.0
SAGUARO 49.2/0.0 0.0/0.0
SAN MANUEL 15.6/92.1 0.0/0.0
SUNNYSLOPE 43.2/0.0 0.0/0.0
LINCOLN ST 35.0/0.0 0.0/0.0
WEST PHOENIX 35.0/0.0 0.0/0.0
APS SYSTEM LOAD W/O ED'S = 6835
General Electric International, Inc. PSLF Program
MW/MVAR
Wed Jan 14 16:16:23 2004
APS Transmission Planning
2004 BASE CASE
sm04+04
EHL-0
BASECASE N-0
ehv_04.drw
sm04.wrk
Rating = 1

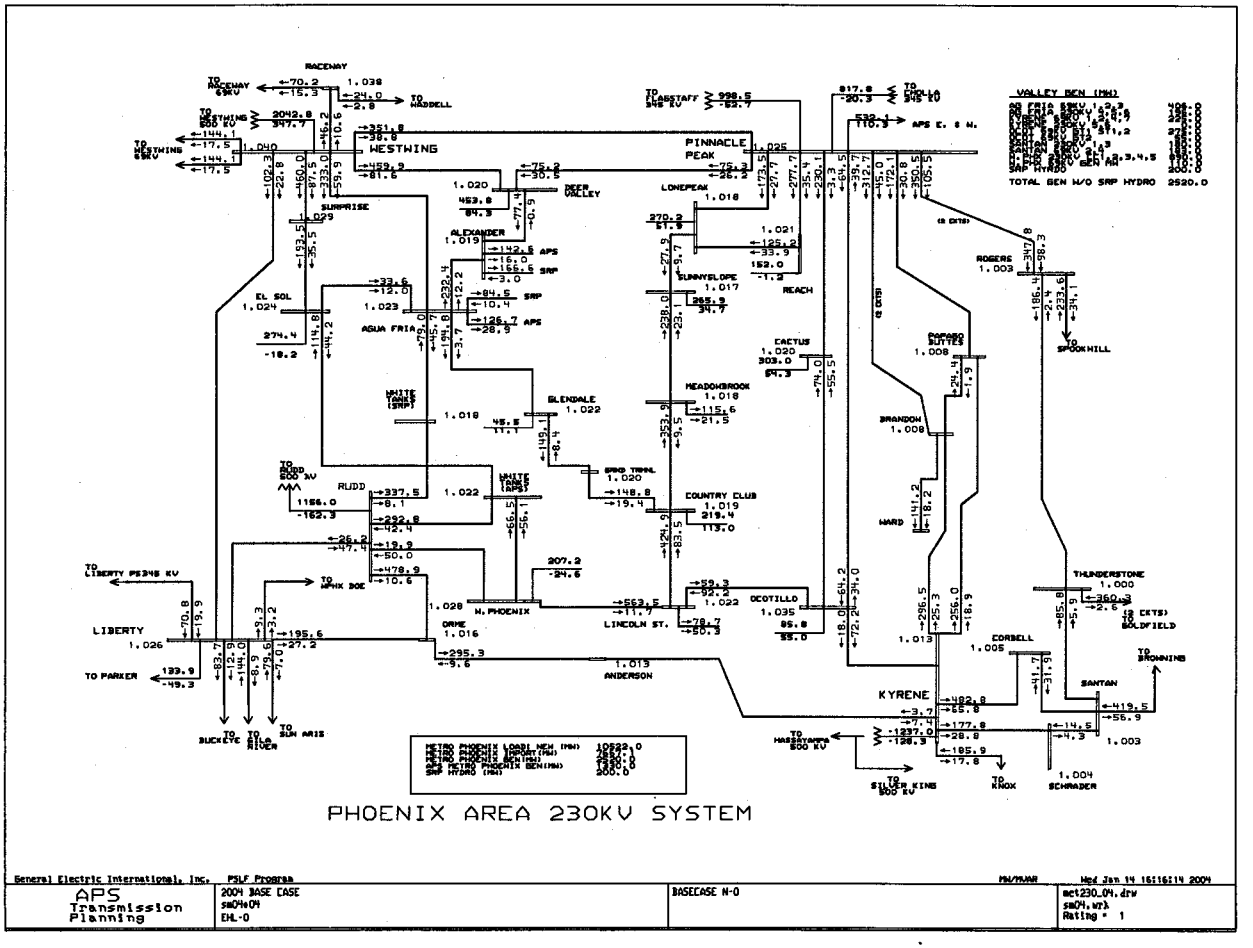

PHOENIX AREA 230KV SYSTEM

General Electric International, Inc. PSLF Program MW/MVAR Wed Jan 14 16:16:14 2004

APS Transmission Planning	2004 BASE CASE sw04h04 EHL-0	BASECASE N-0	met230_04.drw sw04.wrk Rating = 1

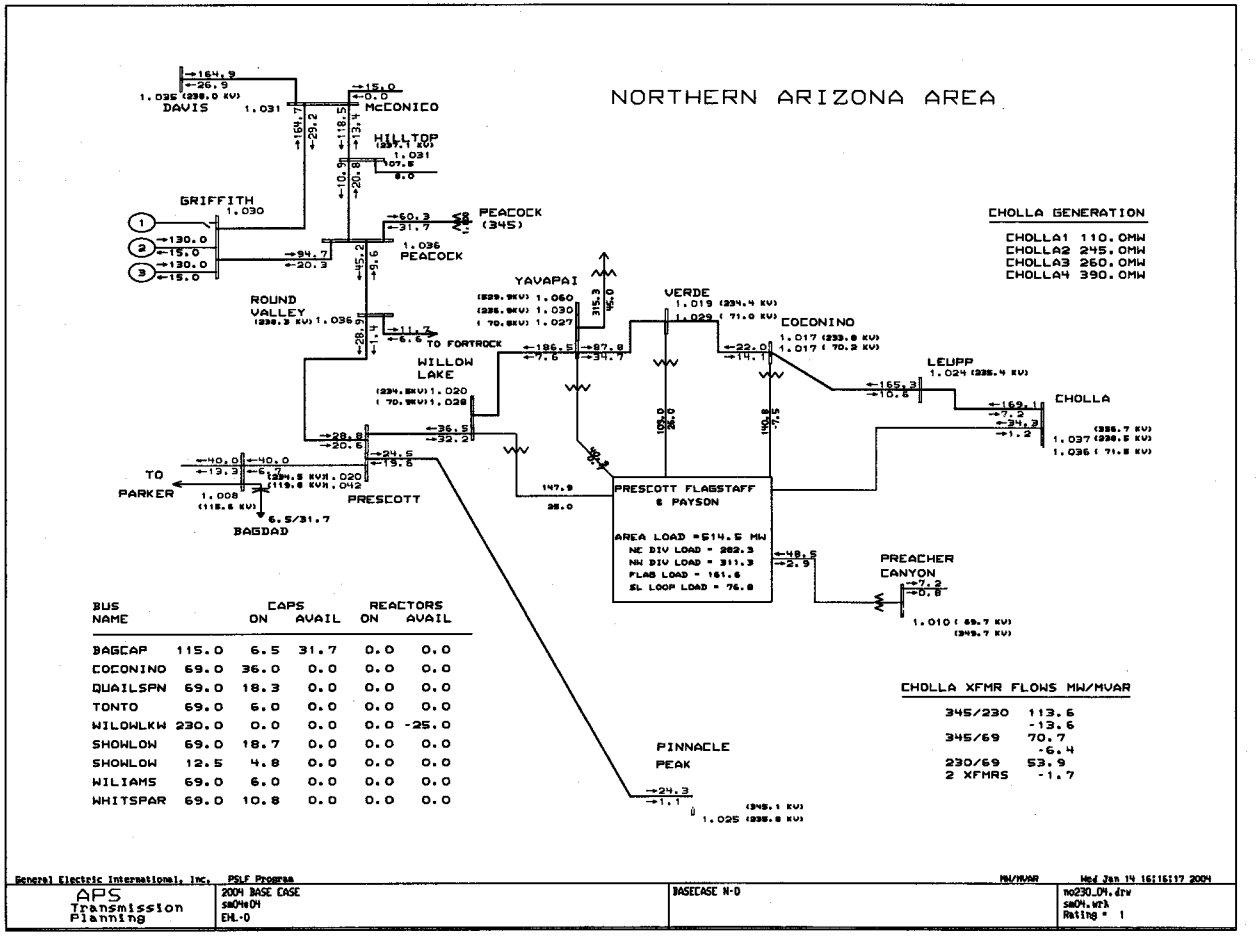

BUS NAME		CAPS ON	CAPS AVAIL	REACTORS ON	REACTORS AVAIL
BAGCAP	115.0	6.5	31.7	0.0	0.0
COCONINO	69.0	36.0	0.0	0.0	0.0
QUAILSPN	69.0	18.3	0.0	0.0	0.0
TONTO	69.0	6.0	0.0	0.0	0.0
WILOWLKW	230.0	0.0	0.0	0.0	-25.0
SHOWLOW	69.0	18.7	0.0	0.0	0.0
SHOWLOW	12.5	4.8	0.0	0.0	0.0
WILIAMS	69.0	6.0	0.0	0.0	0.0
WHITSPAR	69.0	10.8	0.0	0.0	0.0

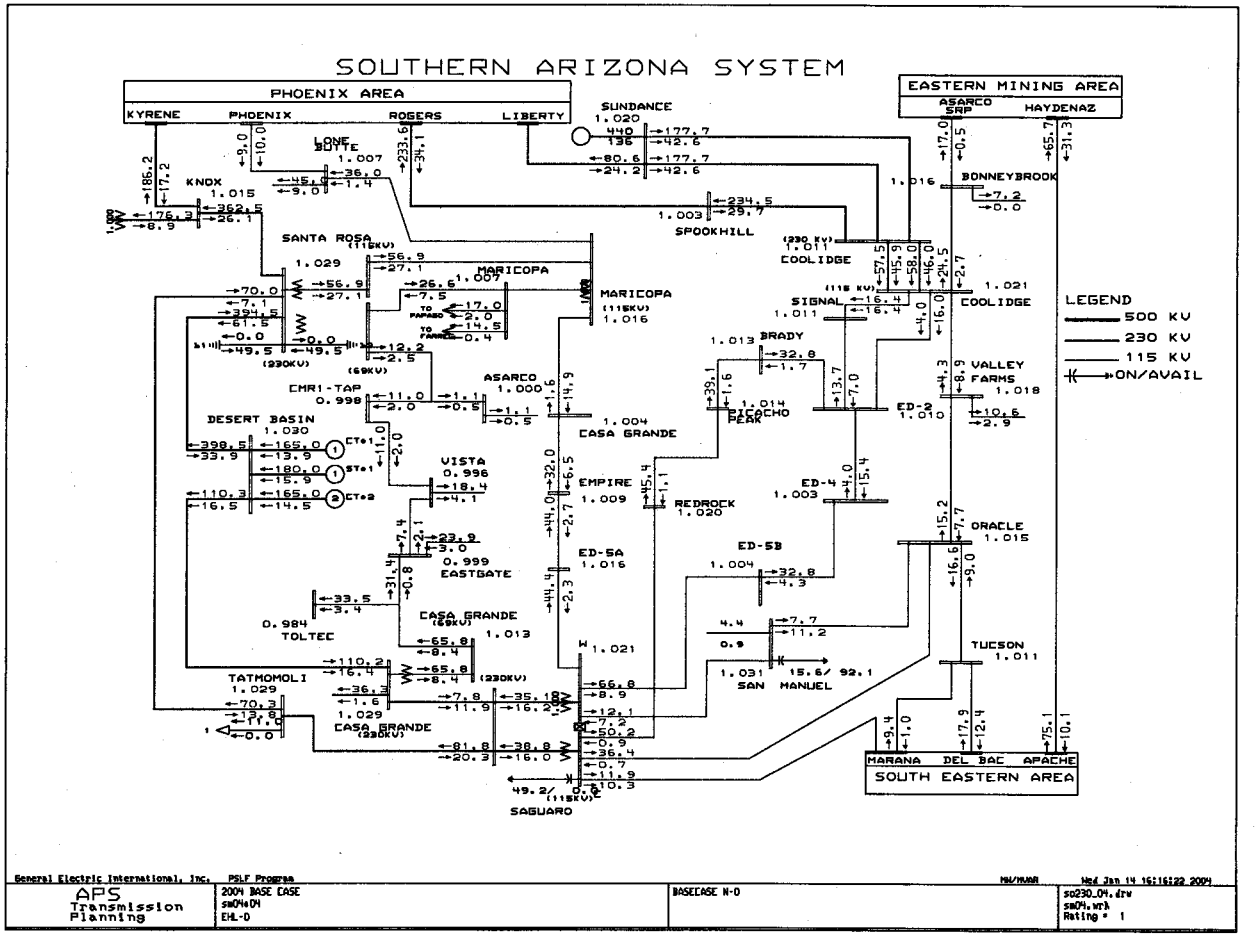
SOUTHERN ARIZONA SYSTEM
PHOENIX AREA
KYRENE
PHOENIX
ROGERS
LIBERTY
EASTERN MINING AREA
ASARCO SRP
HAYDENAZ
SUNDANCE
1.020
LONE BUTTE
1.007
KNOX
1.015
SANTA ROSA
(115KV)
1.029
MARICOPA
1.007
MARICOPA
(115KV)
1.016
SPOOKHILL
1.003
COOLIDGE
(230 KV)
1.011
BONNEYBROOK
1.016
COOLIDGE
1.021
SIGNAL
(115 KV)
1.011
BRADY
1.013
PICACHO PEAK
1.014
VALLEY FARMS
1.018
ED-2
1.010
ASARCO
1.000
CMR1-TAP
0.998
DESERT BASIN
1.030
CASA GRANDE
1.004
VISTA
0.996
EMPIRE
1.009
REDROCK
1.020
ED-4
1.003
ORACLE
1.015
ED-5A
1.016
ED-5B
1.004
EASTGATE
0.999
TOLTEC
0.984
CASA GRANDE
(69KV)
1.013
TATMOMOLI
1.029
CASA GRANDE
(230KV)
1.029
SAN MANUEL
1.031
TUCSON
1.011
SAGUARO
MARANA
DEL BAC
APACHE
SOUTH EASTERN AREA
LEGEND
500 KV
230 KV
115 KV
ON/AVAIL
General Electric International, Inc.
PSLF Program
APS
Transmission
Planning
2004 BASE CASE
sw04+DM
EHL-0
BASECASE N-0
so230_04.drw
sw04.wrk
Rating = 1

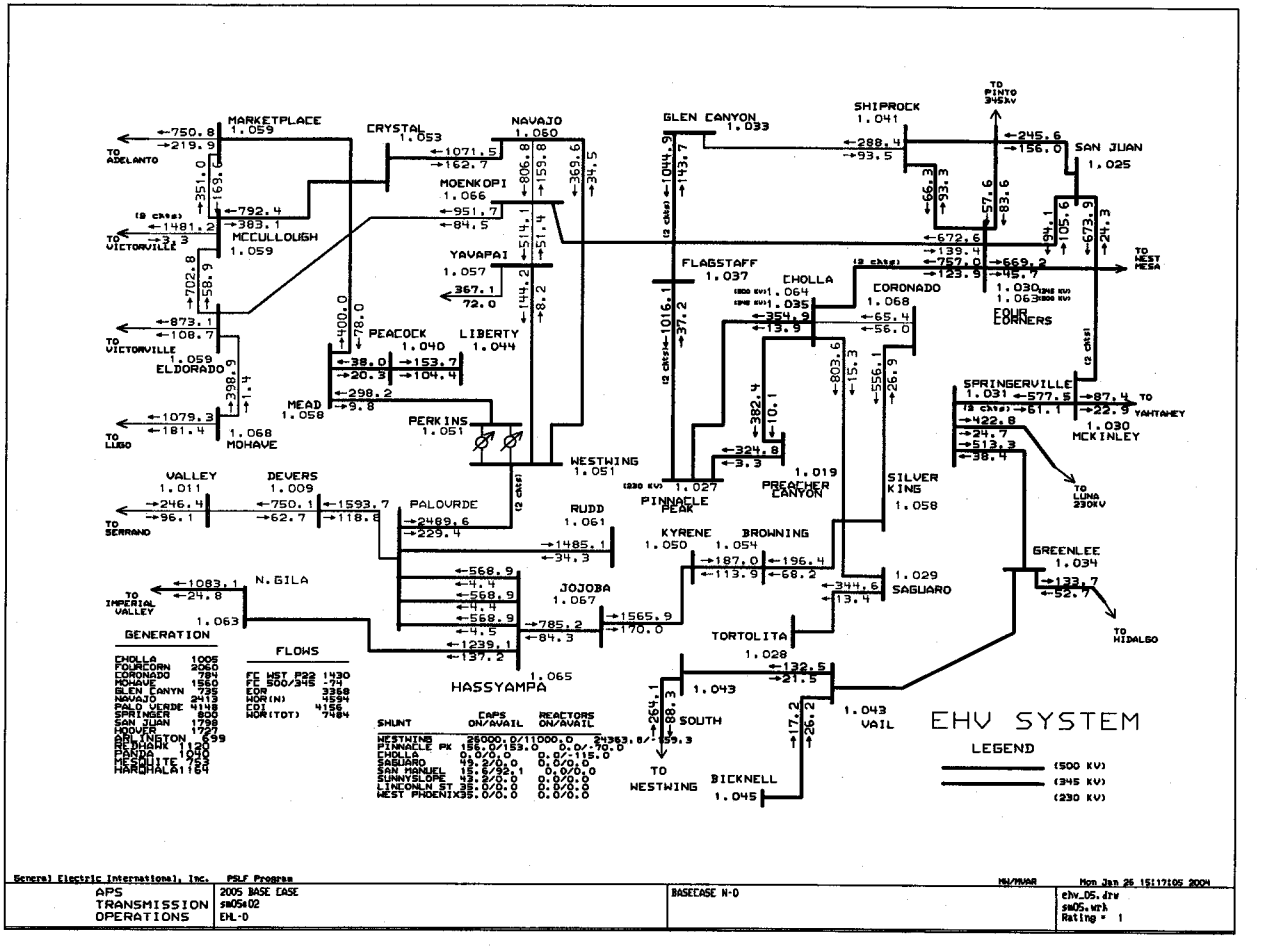
MARKETPLACE 1.059
CRYSTAL 1.053
NAVAJO 1.060
GLEN CANYON 1.033
SHIPROCK 1.041
TO PINTO 345KV
SAN JUAN 1.025
TO ADELANTO
MOENKOPI 1.066
MCCULLOUGH 1.059
TO VICTORVILLE
YAVAPAI 1.057
FLAGSTAFF 1.037
CHOLLA 1.035
CORONADO 1.068
FOUR CORNERS
TO WEST MESA
PEACOCK 1.040
LIBERTY 1.044
ELDORADO 1.059
MEAD 1.058
PERKINS 1.051
WESTWING 1.051
SPRINGERVILLE 1.031
TO YAHTAHEY
MCKINLEY 1.030
TO LUGO
MOHAVE 1.068
VALLEY 1.011
DEVERS 1.009
PALOVERDE
RUDD 1.061
PINNACLE PEAK 1.027
PREACHER CANYON 1.019
SILVER KING 1.058
TO LUNA 230KV
TO SERRANO
KYRENE 1.050
BROWNING 1.054
GREENLEE 1.034
N.GILA 1.063
TO IMPERIAL VALLEY
JOJOBA 1.067
SAGUARO 1.029
TO HIDALGO
TORTOLITA 1.028
HASSYAMPA 1.065
SOUTH 1.043
VAIL 1.043
TO WESTWING
BICKNELL 1.045
EHV SYSTEM
LEGEND
(500 KV)
(345 KV)
(230 KV)
GENERATION
CHOLLA 1005
FOURCORN 2060
CORONADO 784
MOHAVE 1580
GLEN CANYN 795
NAVAJO 2413
PALO VERDE 4148
SPRINGER 805
SAN JUAN 1798
HOOVER 1727
ORM INSTON 6599
REDHAWK 1126
PERDOM 1040
MESQUITE 753
HARCHALA 1164
FLOWS
FC WST P22 1430
FC 500/345 -74
EOR 3368
NOR(IN) 4594
CDI 4156
NOR(TOT) 7484
SHUNT
CAPS ON/AVAIL
REACTORS ON/AVAIL
WESTWING 28000.0/11000.0 24353.0/-359.3
PINNACLE PK 156.0/159.0 0.0/-70.0
CHOLLA 0.0/0.0 0.0/-115.0
SABUARO 49.2/0.0 0.0/0.0
SAN MANUEL 16.6/92.1 0.0/0.0
SUNNYSLOPE 43.2/0.0 0.0/0.0
LINCOLN ST 38.0/0.0 0.0/0.0
WEST PHOENIX 35.0/0.0 0.0/0.0
General Electric International, Inc.
PSLF Program
APS TRANSMISSION OPERATIONS
2005 BASE CASE
sw05x02
EHL-0
BASECASE N-0
MW/MVAR
Mon Jan 26 15:17:05 2004
ehv_05.drw
sw05.wrk
Rating = 1

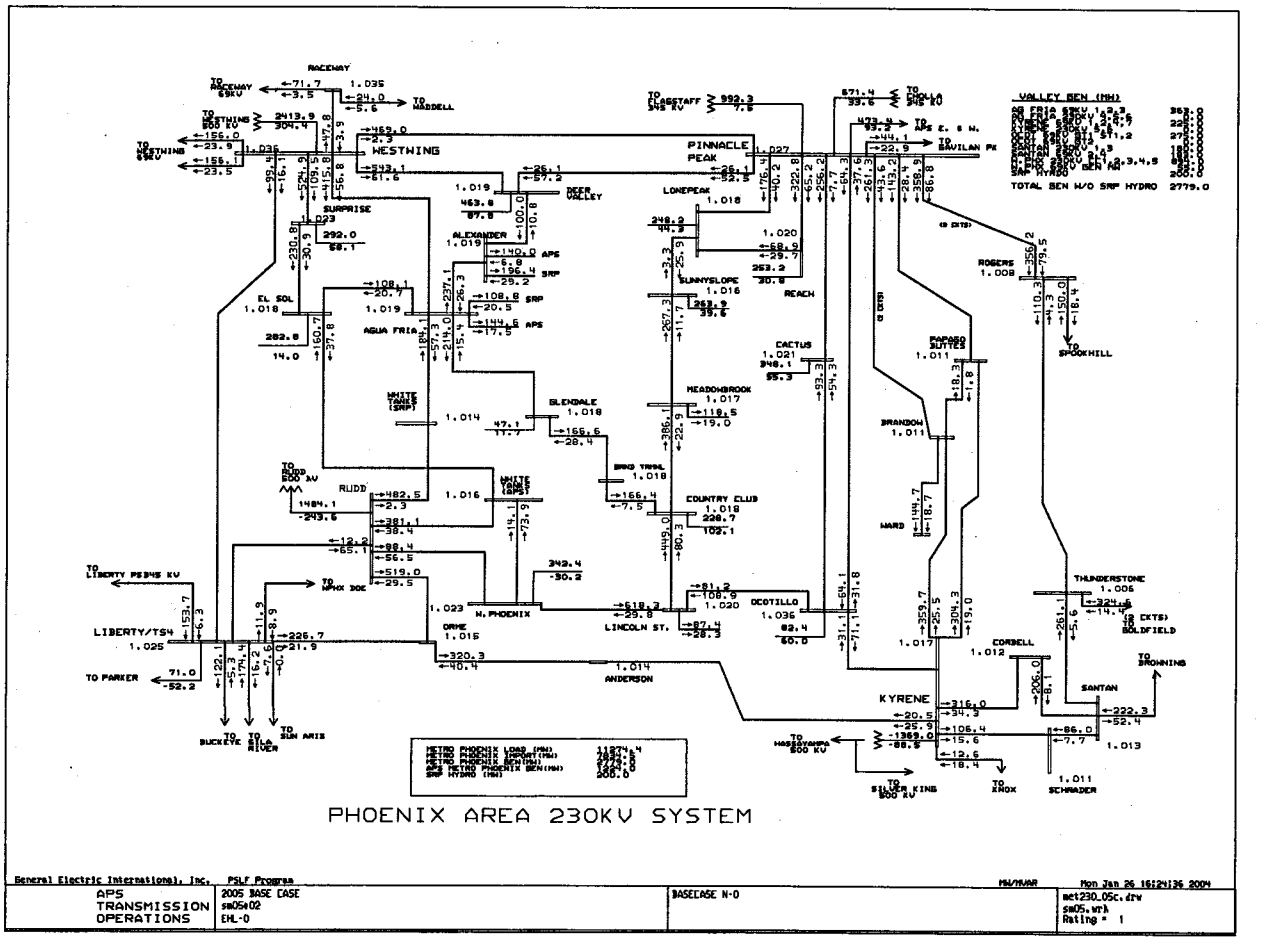
PHOENIX AREA 230KV SYSTEM
General Electric International, Inc.
PSLF Program
APS
TRANSMISSION
OPERATIONS
2005 BASE CASE
sm05e02
EHL-0
BASECASE N-0
Mon Jan 26 16:24:36 2004
met230_05c.drw
sm05.wrk
Rating = 1
VALLEY GEN (MW)
TOTAL GEN W/O SRP HYDRO 2779.0
RACEWAY
WESTWING
PINNACLE PEAK
LONEPEAK
SURPRISE
ALEXANDER
DEER VALLEY
SUNNYSLOPE
REACH
EL SOL
AGUA FRIA
CACTUS
MEADOWBROOK
GLENDALE
RUDD
COUNTRY CLUB
BRANDON
WARD
ROGERS
THUNDERSTONE
N. PHOENIX
ORME
LINCOLN ST.
OCOTILLO
LIBERTY/TS4
ANDERSON
KYRENE
CORBELL
SANTAN
SCHRADER
TO PARKER
TO LIBERTY PS345 KV
TO BUCKEYE
TO SUN ARIS
TO SILVER KING 500 KV
TO XNOX
TO BROWNING
TO SPOOKHILL
TO GAVILAN PK
METRO PHOENIX LOAD (MW) 11274.4
METRO PHOENIX IMPORT(MW) 7834.6
METRO PHOENIX GEN(MW) 2779.0
APS METRO PHOENIX GEN(MW) 1227.0
SRP HYDRO (MW) 200.0

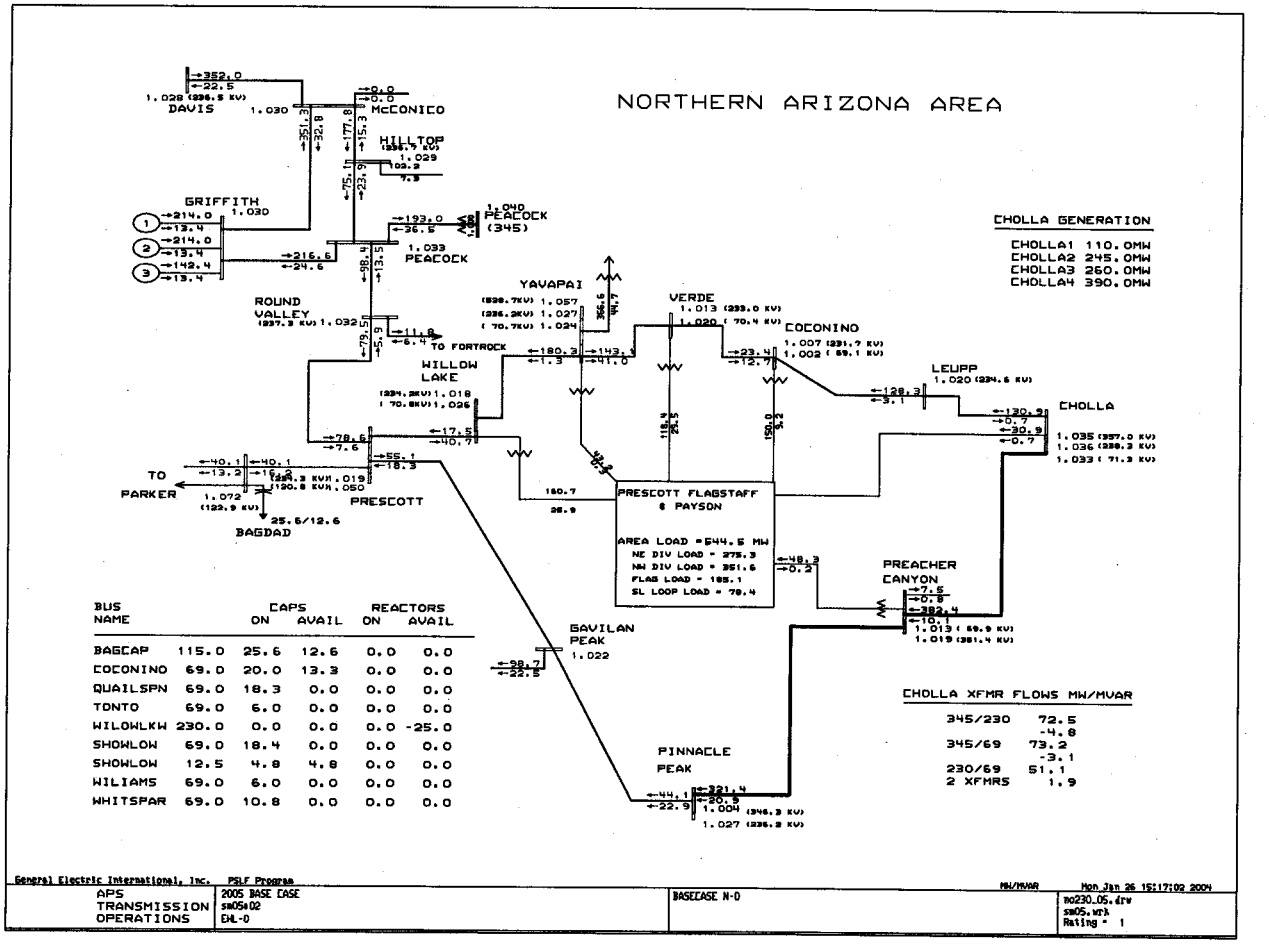

BUS NAME		CAPS ON	CAPS AVAIL	REACTORS ON	REACTORS AVAIL
BAGCAP	115.0	25.6	12.6	0.0	0.0
COCONINO	69.0	20.0	13.3	0.0	0.0
QUAILSPN	69.0	18.3	0.0	0.0	0.0
TONTO	69.0	6.0	0.0	0.0	0.0
WILOWLKW	230.0	0.0	0.0	0.0	-25.0
SHOWLOW	69.0	18.4	0.0	0.0	0.0
SHOWLOW	12.5	4.8	4.8	0.0	0.0
WILIAMS	69.0	6.0	0.0	0.0	0.0
WHITSPAR	69.0	10.8	0.0	0.0	0.0

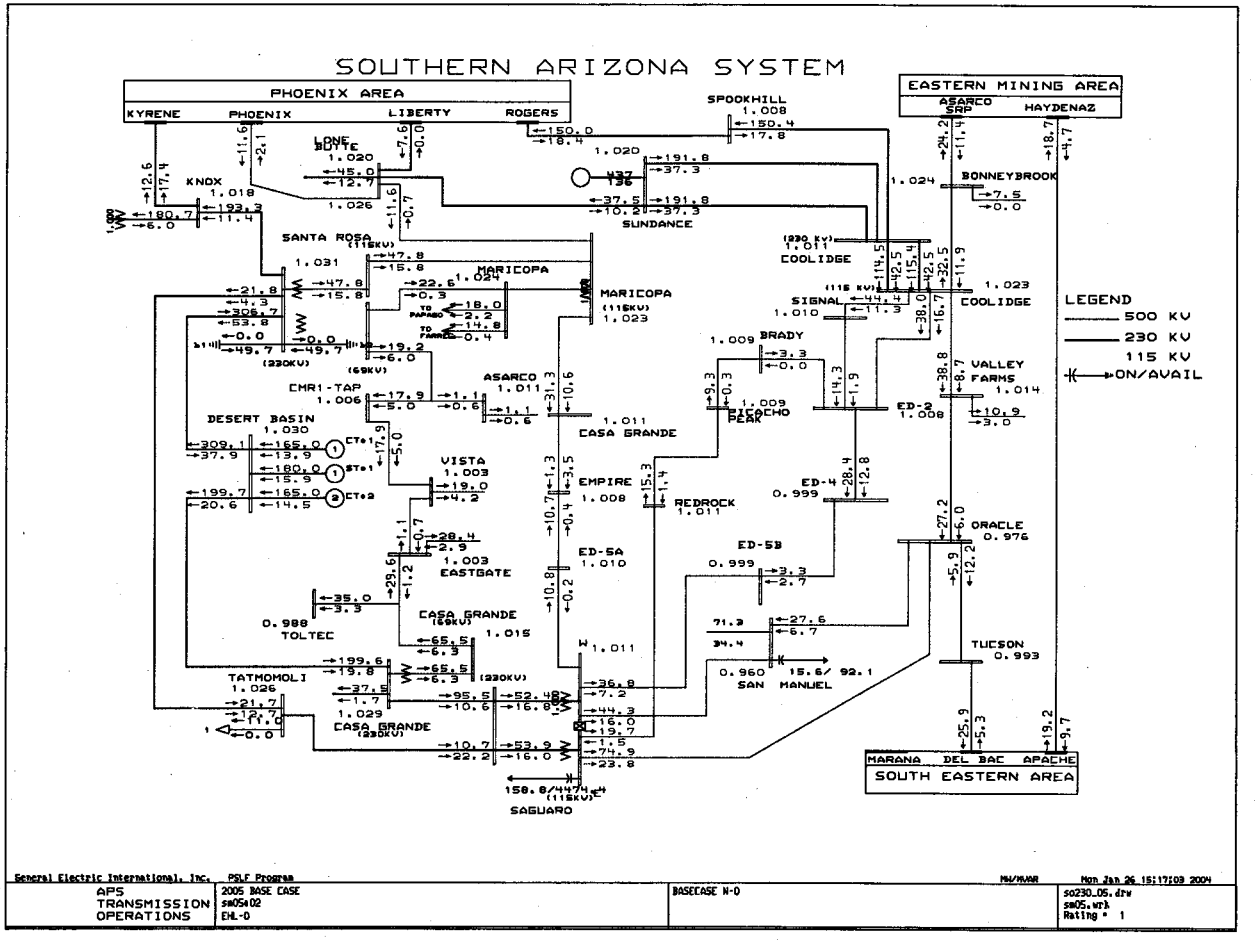
SOUTHERN ARIZONA SYSTEM
PHOENIX AREA
KYRENE
PHOENIX
LIBERTY
ROGERS
EASTERN MINING AREA
ASARCO SRP
HAYDENAZ
SPOOKHILL
1.008
KNOX
1.018
LONE BUTTE
1.020
1.026
SUNDANCE
1.020
BONNEYBROOK
1.024
SANTA ROSA (115KV)
1.031
MARICOPA
1.024
MARICOPA (115KV)
1.023
COOLIDGE (230 KV)
1.011
COOLIDGE
1.023
SIGNAL (115 KV)
1.010
BRADY
1.009
PICACHO PEAK
1.009
VALLEY FARMS
1.014
ED-2
1.008
CMR1-TAP
1.006
ASARCO
1.011
CASA GRANDE
1.011
DESERT BASIN
1.030
VISTA
1.003
EMPIRE
1.008
REDROCK
1.011
ED-4
0.999
ORACLE
0.976
EASTGATE
1.003
ED-5A
1.010
ED-5B
0.999
TOLTEC
0.988
CASA GRANDE (69KV)
1.015
TUCSON
0.993
TATMOMOLI
1.026
CASA GRANDE (230KV)
1.029
SAN MANUEL
0.960
SAGUARO
MARANA
DEL BAC
APACHE
SOUTH EASTERN AREA
LEGEND
500 KV
230 KV
115 KV
ON/AVAIL
General Electric International, Inc.
PSLF Program
MW/MVAR
Mon Jan 26 15:17:09 2004
APS
TRANSMISSION
OPERATIONS
2005 BASE CASE
sw05s02
EHL-0
BASECASE N-0
so230_05.drw
sw05.wrk
Rating = 1

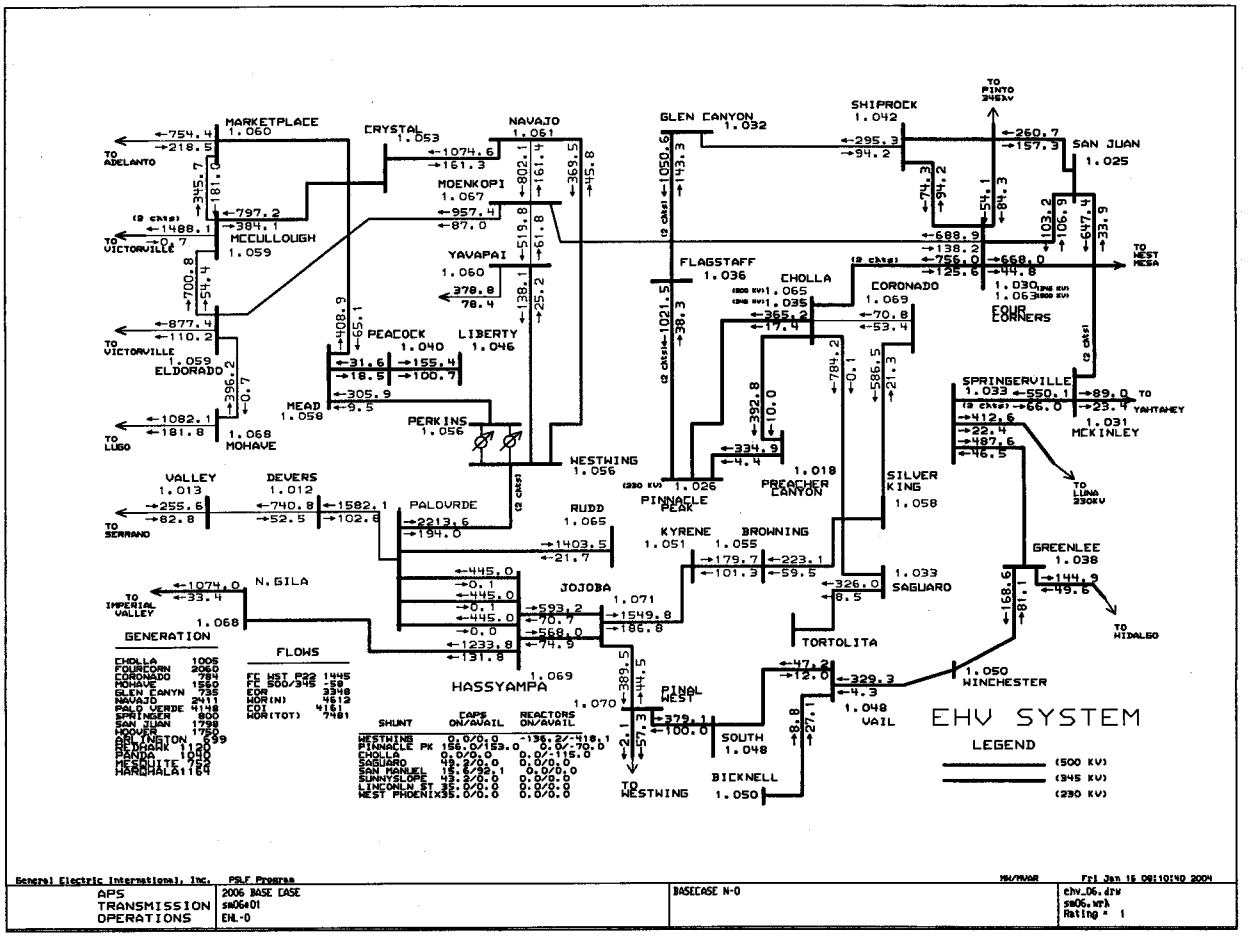
MARKETPLACE 1.060
CRYSTAL 1.053
NAVAJO 1.061
GLEN CANYON 1.032
SHIPROCK 1.042
SAN JUAN 1.025
MOENKOPI 1.067
MCCULLOUGH 1.059
YAVAPAI 1.060
FLAGSTAFF 1.036
CHOLLA
CORONADO 1.069
FOUR CORNERS
PEACOCK 1.040
LIBERTY 1.046
ELDORADO 1.059
MEAD 1.058
PERKINS 1.056
MOHAVE 1.068
WESTWING 1.056
SPRINGERVILLE 1.033
MCKINLEY 1.031
PINNACLE PEAK 1.026
PREACHER CANYON 1.018
SILVER KING 1.058
VALLEY 1.013
DEVERS 1.012
PALOVERDE
RUDD 1.065
KYRENE 1.051
BROWNING 1.055
GREENLEE 1.038
N. GILA 1.068
JOJOBA 1.071
SAGUARO 1.033
TORTOLITA
HASSYAMPA 1.069
WINCHESTER 1.050
VAIL 1.048
FINAL WEST 1.070
SOUTH 1.048
BICKNELL 1.050
TO ADELANTO
TO VICTORVILLE
TO LUGO
TO SERRANO
TO IMPERIAL VALLEY
TO PINTO 345KV
TO WEST MESA
TO YAHTAHEY
TO LUNA 230KV
TO MIDALGO
TO WESTWING
GENERATION
FLOWS
SHUNT
CAPS ON/AVAIL
REACTORS ON/AVAIL
EHV SYSTEM
LEGEND
(500 KV)
(345 KV)
(230 KV)
General Electric International, Inc.
PSLF Program
MW/MVAR
Fri Jan 16 08:10:40 2004
APS TRANSMISSION OPERATIONS
2006 BASE CASE
sw0601
EHL-0
BASECASE N-0
ehv_06.drw
sw06.wrk
Rating = 1

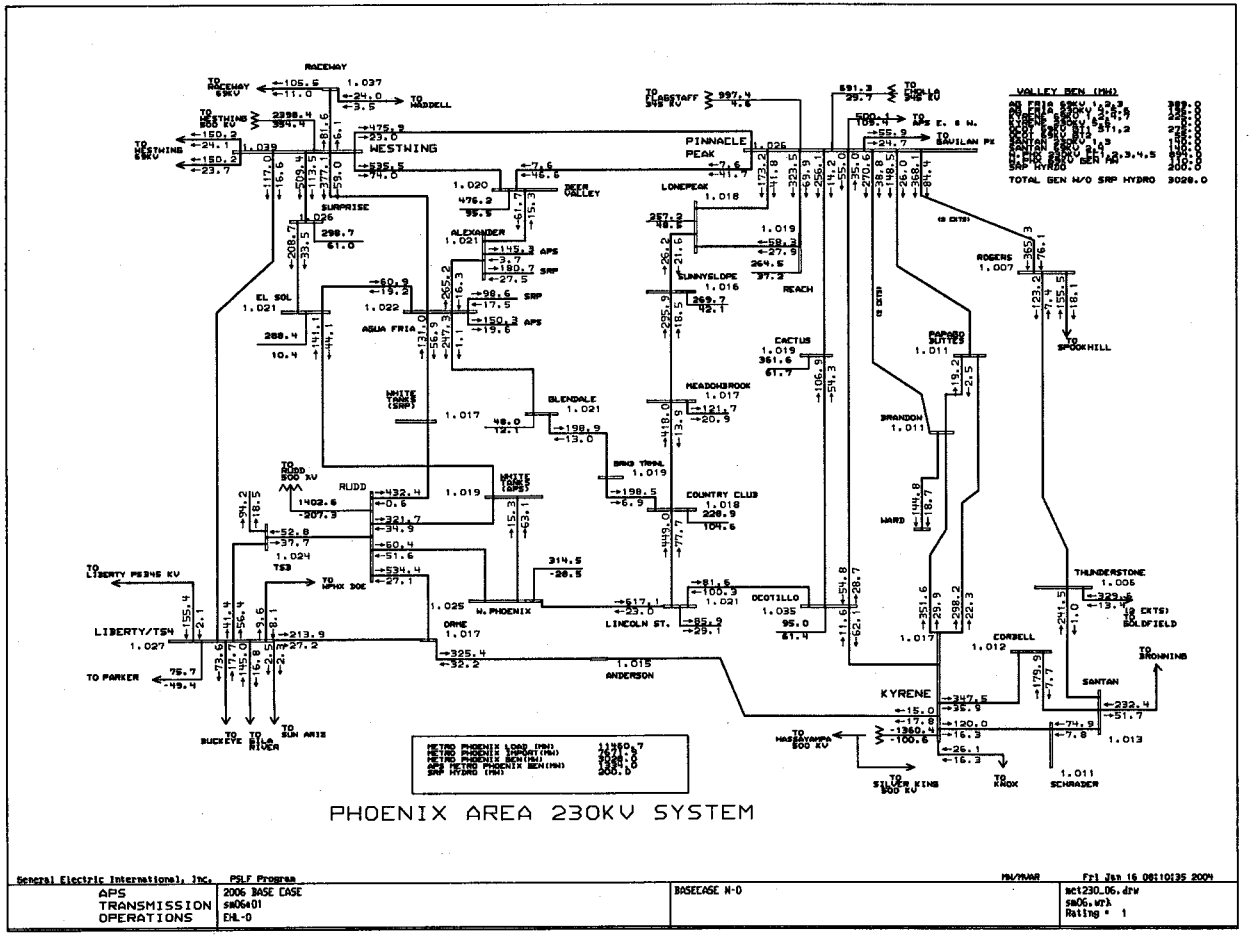
PHOENIX AREA 230KV SYSTEM
WESTWING
PINNACLE PEAK
LONEPEAK
SUNNYSLOPE
REACH
CACTUS
MEADOWBROOK
COUNTRY CLUB
DECOTILLO
LINCOLN ST.
W. PHOENIX
ORME
ANDERSON
KYRENE
SANTAN
CORBELL
THUNDERSTONE
BRANDON
WARD
PAPAGO BUTTES
ROGERS
SPOOKHILL
RUDD
LIBERTY/TS4
TO PARKER
TO BUCKEYE
TO BILA RIVER
TO SUN ARIZ
TO HASSAYAMPA 500 KV
TO SILVER KING 500 KV
TO KNOX
SCHRADER
TO BRONNING
TO GOLDFIELD
TO SPOOKHILL
TO GAVILAN PK
TO CHOLLA 345 KV
TO FLAGSTAFF 345 KV
TO RACEWAY 69KV
TO WESTWING 500 KV
TO WESTWING 69KV
TO MADDELL
TO LIBERTY PS345 KV
TO NPHX DOE
TO RUDD 500 KV
TO APS E. & W.
VALLEY GEN (MW)
TOTAL GEN W/O SRP HYDRO 3028.0
METRO PHOENIX LOAD (MW) 11460.7
METRO PHOENIX IMPORT(MW) 7671.9
METRO PHOENIX GEN(MW) 3028.0
APS METRO PHOENIX GEN(MW) 1334.0
SRP HYDRO (MW) 200.0
General Electric International, Inc. PSLF Program
MW/MVAR
Fri Jan 16 08:10:35 2004
APS TRANSMISSION OPERATIONS
2006 BASE CASE
sm06a01
EHL-0
BASECASE N-0
mct230_06.drw
sm06.wrk
Rating = 1

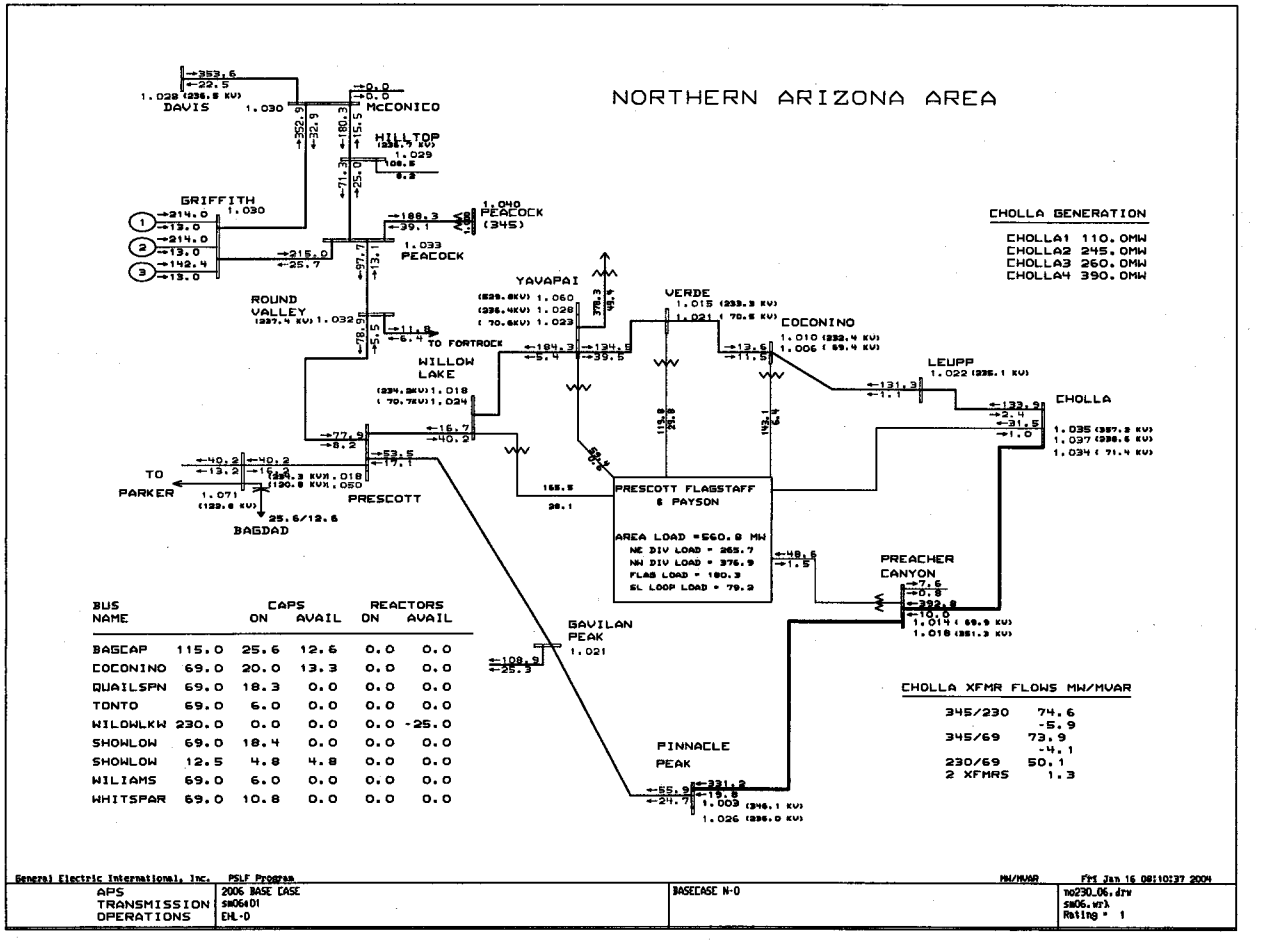

BUS NAME		CAPS ON	CAPS AVAIL	REACTORS ON	REACTORS AVAIL
BAGCAP	115.0	25.6	12.6	0.0	0.0
COCONINO	69.0	20.0	13.3	0.0	0.0
QUAILSPN	69.0	18.3	0.0	0.0	0.0
TONTO	69.0	6.0	0.0	0.0	0.0
WILOWLKW	230.0	0.0	0.0	0.0	-25.0
SHOWLOW	69.0	18.4	0.0	0.0	0.0
SHOWLOW	12.5	4.8	4.8	0.0	0.0
WILIAMS	69.0	6.0	0.0	0.0	0.0
WHITSPAR	69.0	10.8	0.0	0.0	0.0

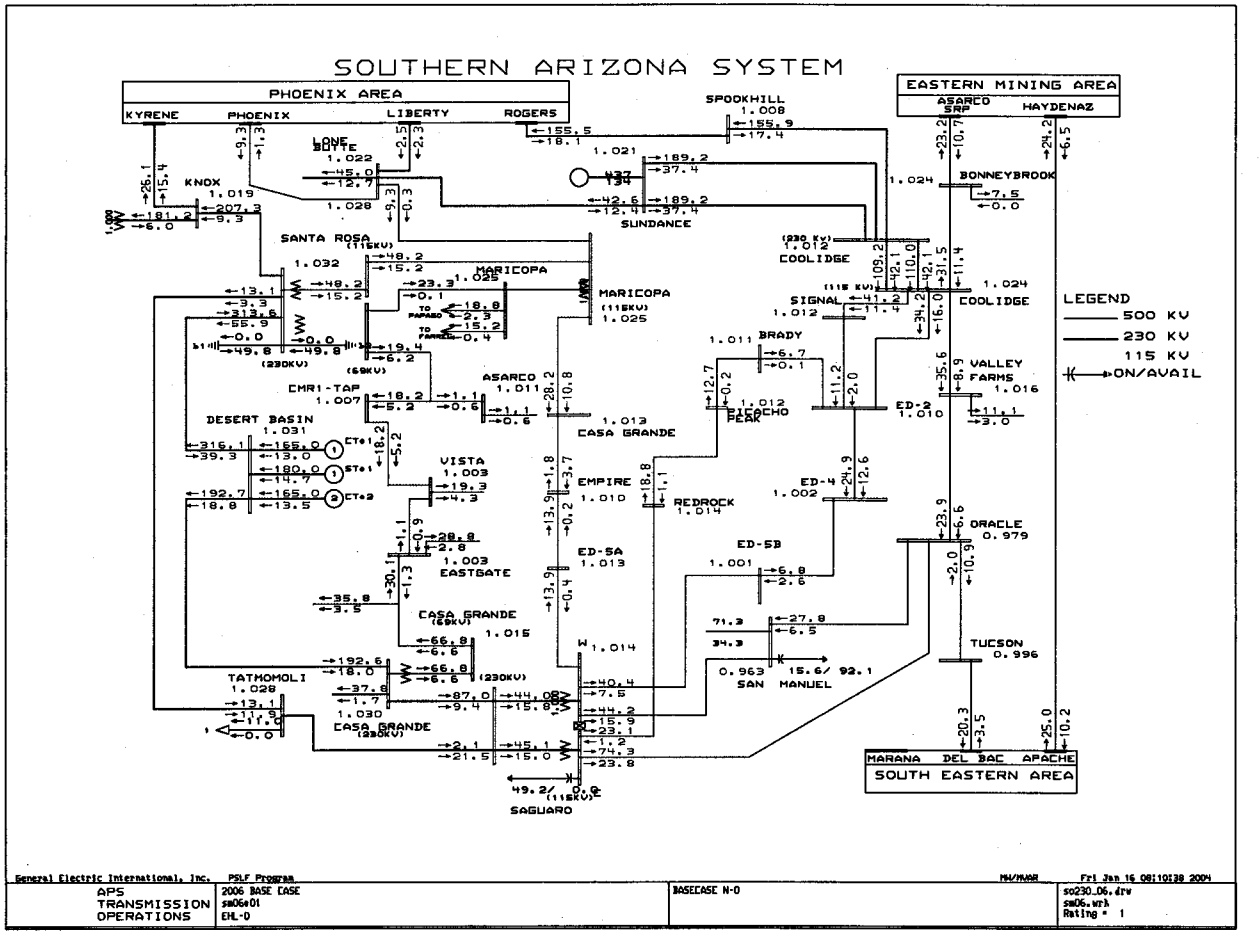
SOUTHERN ARIZONA SYSTEM
PHOENIX AREA
KYRENE
PHOENIX
LIBERTY
ROGERS
EASTERN MINING AREA
ASARCO SMP
HAYDENAZ
SPOOKHILL
1.008
155.9
17.4
155.5
18.1
LONE BUTTE
1.022
45.0
12.7
1.028
KNOX
1.019
207.3
9.3
181.2
6.0
26.1
15.4
1.021
189.2
37.4
437
134
42.6
12.4
SUNDANCE
1.024
BONNEYBROOK
7.5
0.0
23.2
10.7
24.2
6.5
SANTA ROSA
(115KV)
1.032
48.2
15.2
13.1
3.3
313.6
55.9
0.0
49.8
(230KV)
(69KV)
MARICOPA
1.025
23.3
0.1
18.8
2.3
15.2
0.4
TO PAPAGO
TO FARGO
MARICOPA
(115KV)
1.025
19.4
6.2
(230 KV)
1.012
COOLIDGE
109.2
42.1
110.0
31.5
11.4
(115 KV)
41.2
11.4
SIGNAL
1.012
34.2
16.0
1.024
COOLIDGE
LEGEND
500 KV
230 KV
115 KV
ON/AVAIL
1.011
BRADY
6.7
0.1
12.7
0.2
1.012
PICACHO PEAK
11.2
2.0
35.6
8.9
VALLEY FARMS
1.016
ED-9
1.010
11.1
3.0
CMR1-TAP
1.007
18.2
5.2
1.1
0.6
ASARCO
1.011
28.2
10.8
1.013
CASA GRANDE
DESERT BASIN
1.031
316.1
39.3
165.0
13.0
CT#1
180.0
14.7
ST#1
192.7
18.8
165.0
13.5
CT#2
18.2
5.2
VISTA
1.003
19.3
4.3
EMPIRE
1.010
1.8
3.7
13.9
0.2
18.8
1.1
REDROCK
1.014
ED-4
1.002
24.9
12.6
23.9
6.6
ORACLE
0.979
2.0
10.9
1.1
0.9
28.8
2.8
1.003
EASTGATE
30.1
1.3
ED-5A
1.013
ED-5B
1.001
6.8
2.6
35.8
3.5
CASA GRANDE
(69KV)
1.015
13.9
0.4
71.3
34.3
27.8
6.5
0.963
15.6/ 92.1
SAN MANUEL
TUCSON
0.996
66.8
6.6
192.6
18.0
66.8
6.6
(230KV)
1.014
TATMOMOLI
1.028
37.8
1.7
1.030
CASA GRANDE
(230KV)
87.0
9.4
44.0
15.8
40.4
7.5
44.2
15.9
23.1
1.2
74.3
23.8
13.1
11.9
0.0
2.1
21.5
45.1
15.0
49.2/ 0.0
(115KV)
SAGUARO
20.3
3.5
25.0
10.2
MARANA
DEL BAC
APACHE
SOUTH EASTERN AREA
General Electric International, Inc.
PSLF Program
MW/MVAR
Fri Jan 16 08:10:38 2004
APS
TRANSMISSION
OPERATIONS
2006 BASE CASE
sw06s01
EHL-0
BASECASE N-0
so230_06.drw
sw06.wrk
Rating = 1

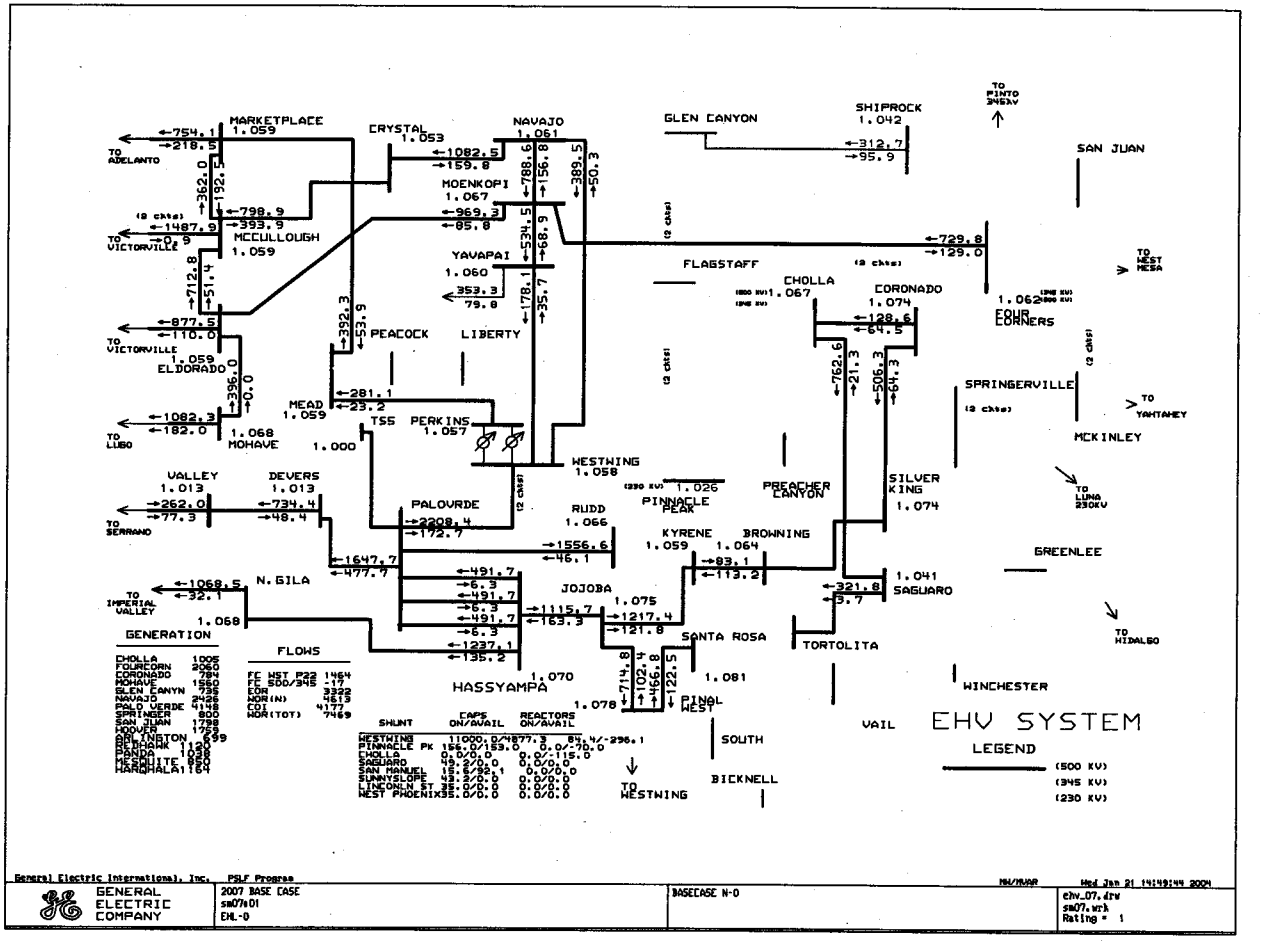
MARKETPLACE 1.059
CRYSTAL 1.053
NAVAJO 1.061
GLEN CANYON
SHIPROCK 1.042
TO PINTO 345KV
SAN JUAN
TO ADELANTO
MOENKOPI 1.067
MCCULLOUGH 1.059
TO VICTORVILLE
YAVAPAI 1.060
FLAGSTAFF
CHOLLA 1.067
CORONADO 1.074
1.062 FOUR CORNERS
TO WEST MESA
PEACOCK
LIBERTY
ELDORADO 1.059
MEAD 1.059
TSS
PERKINS 1.057
SPRINGERVILLE
TO YAHTAHEY
MCKINLEY
TO LUGO
1.068 MOHAVE
1.000
WESTWING 1.058
VALLEY 1.013
DEVERS 1.013
PALOVRDE
RUDD 1.066
PINNACLE PEAK 1.026
PREACHER CANYON
SILVER KING 1.074
TO LUNA 230KV
TO SERRANO
KYRENE 1.059
BROWNING 1.064
GREENLEE
N. GILA
JOJOBA 1.075
1.041 SAGUARO
TO IMPERIAL VALLEY
1.068
SANTA ROSA
TORTOLITA
TO HIDALGO
GENERATION
FLOWS
HASSYAMPA 1.070
1.081
PINAL WEST
WINCHESTER
1.078
VAIL
EHV SYSTEM
LEGEND
SOUTH
BICKNELL
TO WESTWING
(500 KV)
(345 KV)
(230 KV)
General Electric International, Inc. PSLF Program
GENERAL ELECTRIC COMPANY
2007 BASE CASE
sm07a01
EHL-0
BASECASE N-0
Wed Jan 21 14:49:44 2004
ehv_07.drw
sm07.wrk
Rating = 1

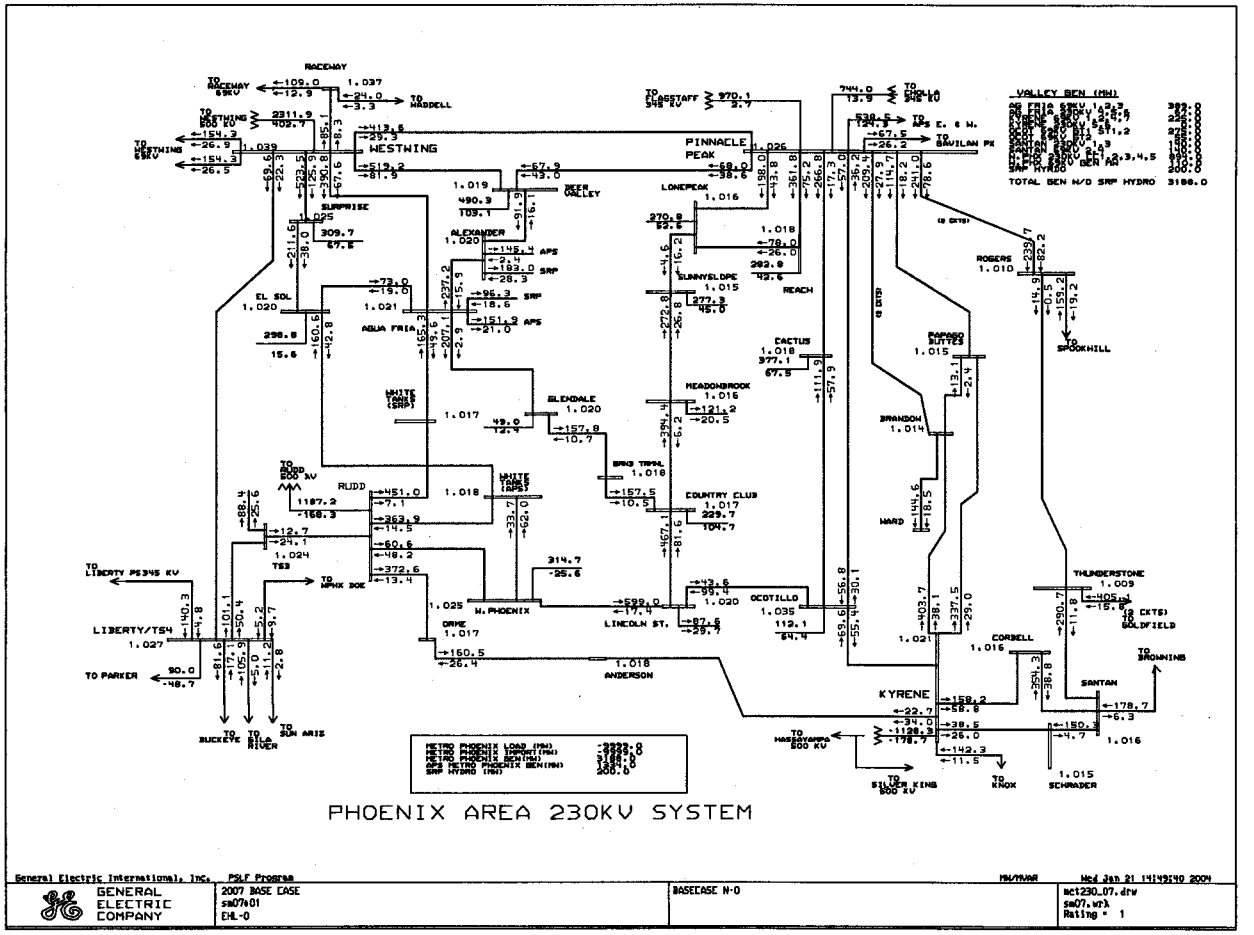
PHOENIX AREA 230KV SYSTEM
General Electric International, Inc. PSLF Program
GENERAL ELECTRIC COMPANY
2007 BASE CASE
sm07a01
EHL-0
BASECASE N-0
Wed Jan 21 14:49:40 2004
mct230_07.drw
sm07.wrk
Rating = 1

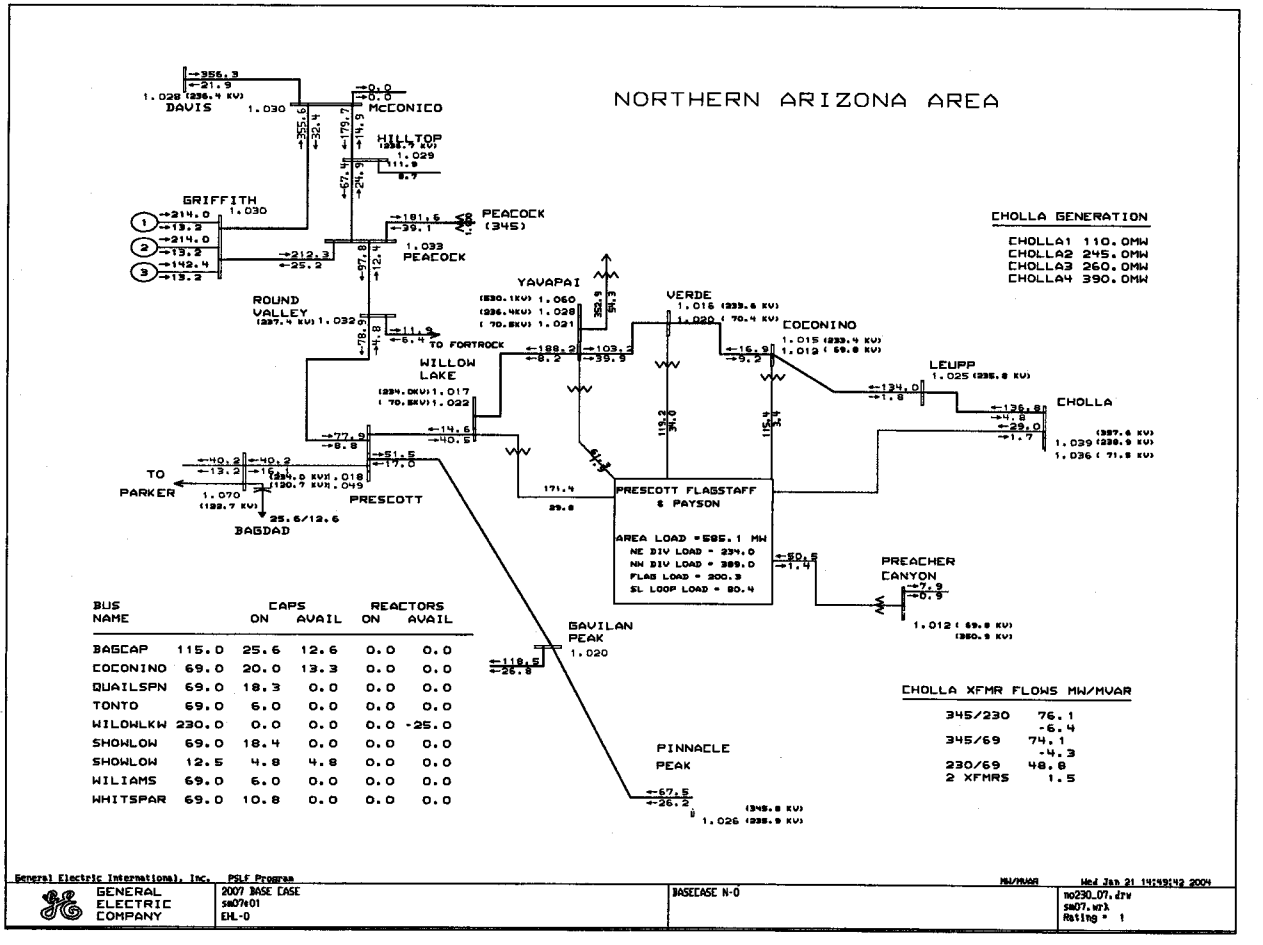

BUS NAME		CAPS ON	CAPS AVAIL	REACTORS ON	REACTORS AVAIL
BAGCAP	115.0	25.6	12.6	0.0	0.0
COCONINO	69.0	20.0	13.3	0.0	0.0
QUAILSPN	69.0	18.3	0.0	0.0	0.0
TONTO	69.0	6.0	0.0	0.0	0.0
WILOWLKW	230.0	0.0	0.0	0.0	-25.0
SHOWLOW	69.0	18.4	0.0	0.0	0.0
SHOWLOW	12.5	4.8	4.8	0.0	0.0
WILIAMS	69.0	6.0	0.0	0.0	0.0
WHITSPAR	69.0	10.8	0.0	0.0	0.0

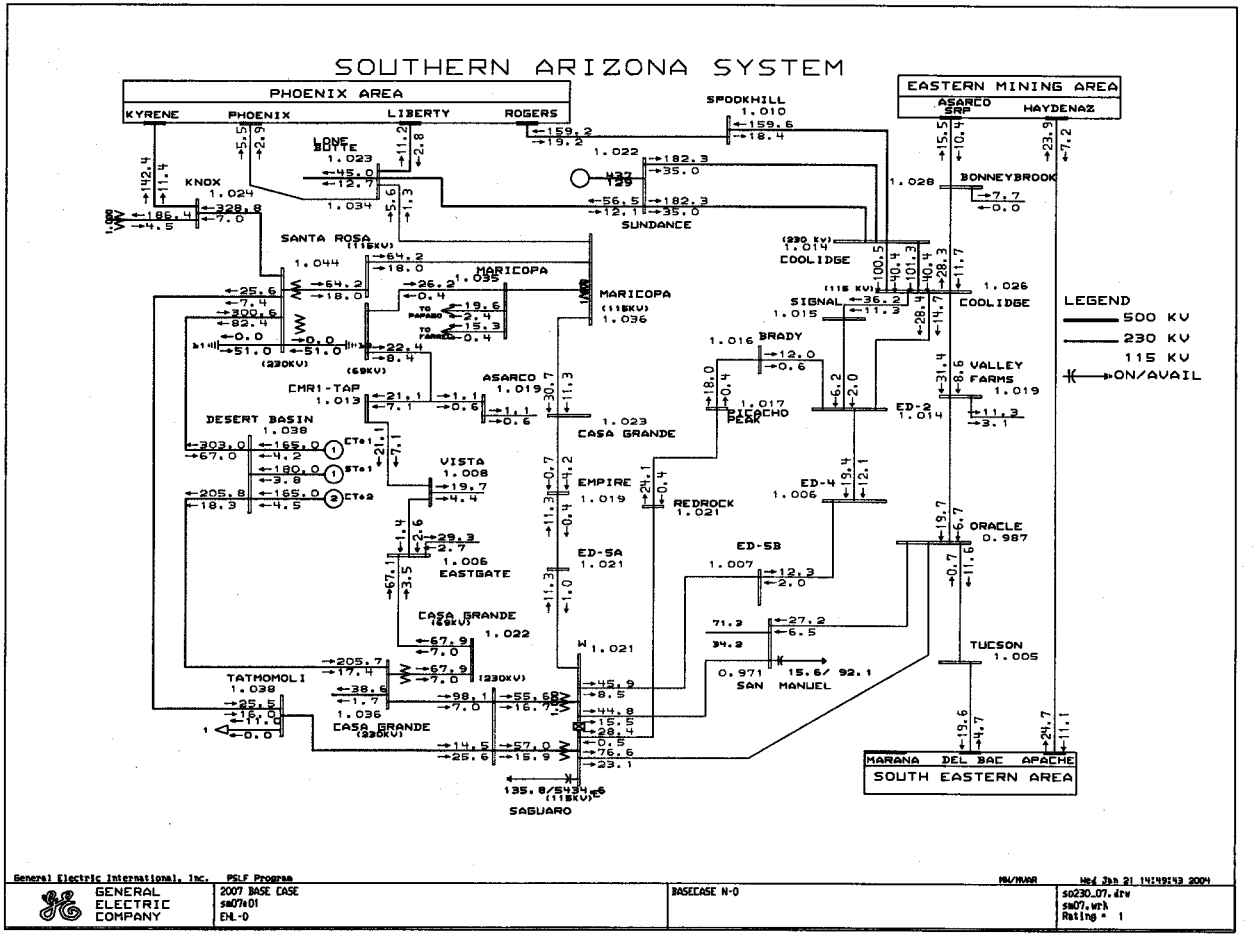
SOUTHERN ARIZONA SYSTEM
PHOENIX AREA
KYRENE
PHOENIX
LIBERTY
ROGERS
EASTERN MINING AREA
ASARCO SRP
HAYDENAZ
SPOOKHILL
1.010
LONE BUTTE
1.023
KNOX
1.024
1.034
1.022
SUNDANCE
BONNEYBROOK
1.028
SANTA ROSA
1.044
MARICOPA
1.035
MARICOPA
1.036
COOLIDGE
1.014
SIGNAL
1.015
COOLIDGE
1.026
LEGEND
500 KV
230 KV
115 KV
ON/AVAIL
BRADY
1.016
CMR1-TAP
1.013
ASARCO
1.019
DESERT BASIN
1.038
CASA GRANDE
1.023
PICACHO PEAK
1.017
ED-2
1.014
VALLEY FARMS
1.019
VISTA
1.008
EMPIRE
1.019
REDROCK
1.021
ED-4
1.006
ORACLE
0.987
EASTGATE
1.006
ED-5A
1.021
ED-5B
1.007
CASA GRANDE
1.022
TUCSON
1.005
TATMOMOLI
1.038
1.036
CASA GRANDE
SAN MANUEL
0.971
15.6/ 92.1
SAGUARO
MARANA
DEL BAC
APACHE
SOUTH EASTERN AREA
General Electric International, Inc.
PSLF Program
GENERAL ELECTRIC COMPANY
2007 BASE CASE
sm07e01
ENL-0
BASECASE N-0
so230_07.drw
sm07.wrk
Rating = 1

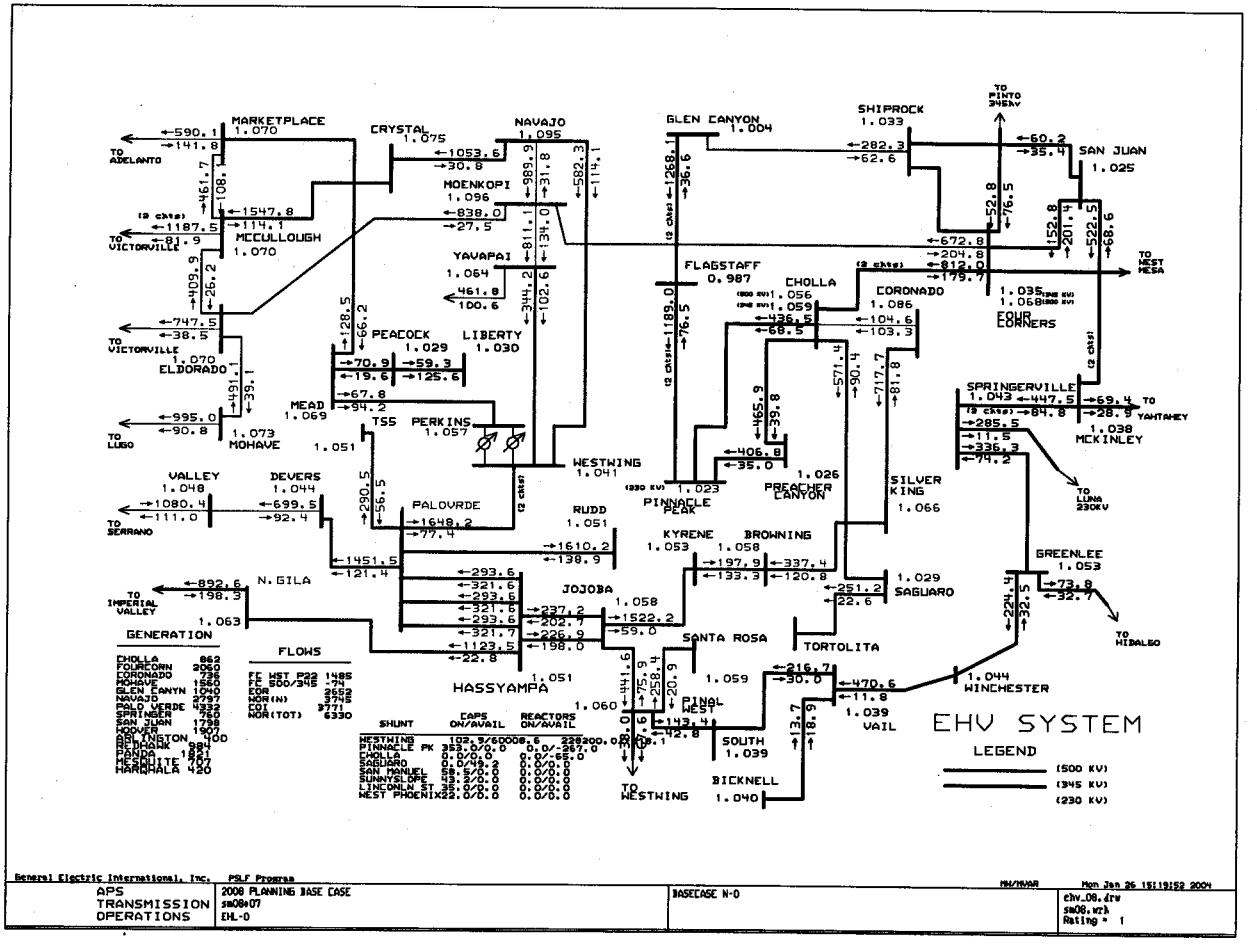
MARKETPLACE 1.070
CRYSTAL 1.075
NAVAJO 1.095
GLEN CANYON 1.004
SHIPROCK 1.033
SAN JUAN 1.025
MOENKOPI 1.096
MCCULLOUGH 1.070
YAVAPAI 1.064
FLAGSTAFF 0.987
CHOLLA 1.056
CORONADO 1.086
FOUR CORNERS 1.035 1.068
PEACOCK 1.029
LIBERTY 1.030
ELDORADO 1.070
MEAD 1.069
TSS
PERKINS 1.057
MOHAVE 1.073
WESTWING 1.041
SPRINGERVILLE 1.043
MCKINLEY 1.038
VALLEY 1.048
DEVERS 1.044
PALOVERDE
RUDD 1.051
PINNACLE PEAK 1.023
PREACHER CANYON 1.026
SILVER KING 1.066
KYRENE 1.053
BROWNING 1.058
GREENLEE 1.053
N. GILA 1.063
JOJOBA 1.058
SAGUARO 1.029
SANTA ROSA 1.059
TORTOLITA
HASSYAMPA 1.051
PINAL WEST 1.060
WINCHESTER 1.044
VAIL 1.039
SOUTH 1.039
BICKNELL 1.040
TO ADELANTO
TO VICTORVILLE
TO LUGO
TO SERRANO
TO IMPERIAL VALLEY
TO PINTO 345KV
TO WEST MESA
TO YAHTAHEY
TO LUNA 230KV
TO HIDALGO
TO WESTWING
GENERATION
CHOLLA 862
FOURCORN 2050
CORONADO 736
MOHAVE 1580
GLEN CANYN 1040
NAVAJO 2797
PALO VERDE 4322
SPRINGER 760
SAN JUAN 1798
HOOVER 1907
ABILYNSTON 400
BECHARK 984
PANDA 1841
MESQUITE 707
MARUHALE 420
FLOWS
FC WST P22 1485
FC SOO/345 -74
COR 265
NOR(N) 3375
COI 3771
NOR(TOT) 6330
SHUNT CAPS ON/AVAIL REACTORS ON/AVAIL
WESTWING 102.9/60000.6 228200.0/0.0
PINNACLE PK 353.0/0.0 0.0/-367.0
CHOLLA 0.0/0.0 0.0/-65.0
SAGUARO 0.0/49.2 0.0/0.0
SAN MANUEL 58.5/0.0 0.0/0.0
SUNNYSLOPE 43.3/0.0 0.0/0.0
LINCOLN ST 35.0/0.0 0.0/0.0
WEST PHOENIX 22.0/0.0 0.0/0.0
EHV SYSTEM
LEGEND
(500 KV)
(345 KV)
(230 KV)
General Electric International, Inc. PSLF Program
MW/MVAR
Mon Jan 26 15:19:52 2004
APS TRANSMISSION OPERATIONS
2008 PLANNING BASE CASE
sm08+07
EHL-0
BASECASE N-0
ehv_08.drw
sm08.wrk
Rating = 1

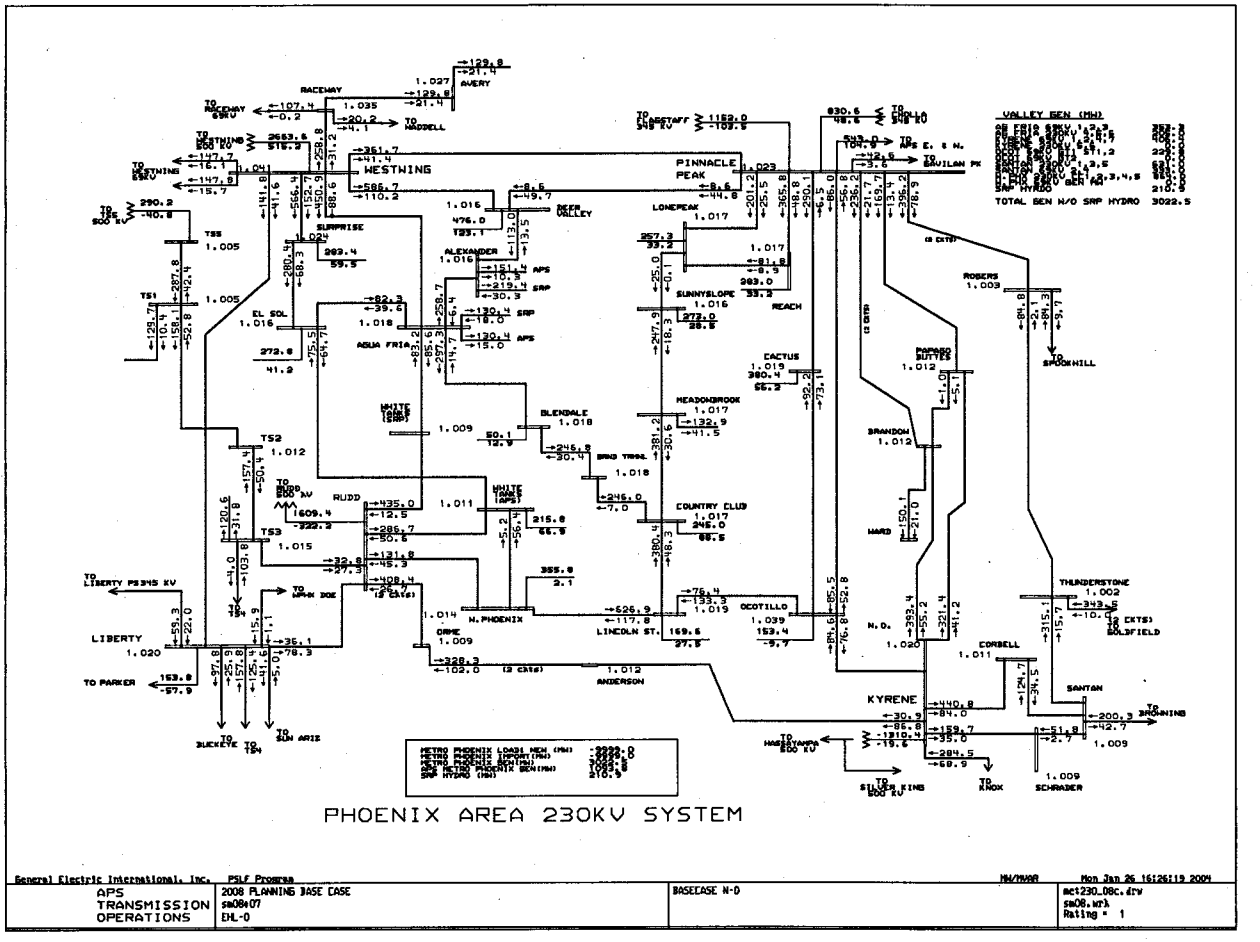

General Electric International, Inc. PSLF Program MM/MMAA Mon Jan 26 16:26:19 2004

APS TRANSMISSION OPERATIONS	2008 PLANNING BASE CASE sw08a07 EHL-0	BASECASE N-0	mt230_08c.drw sw08.wrk Rating = 1

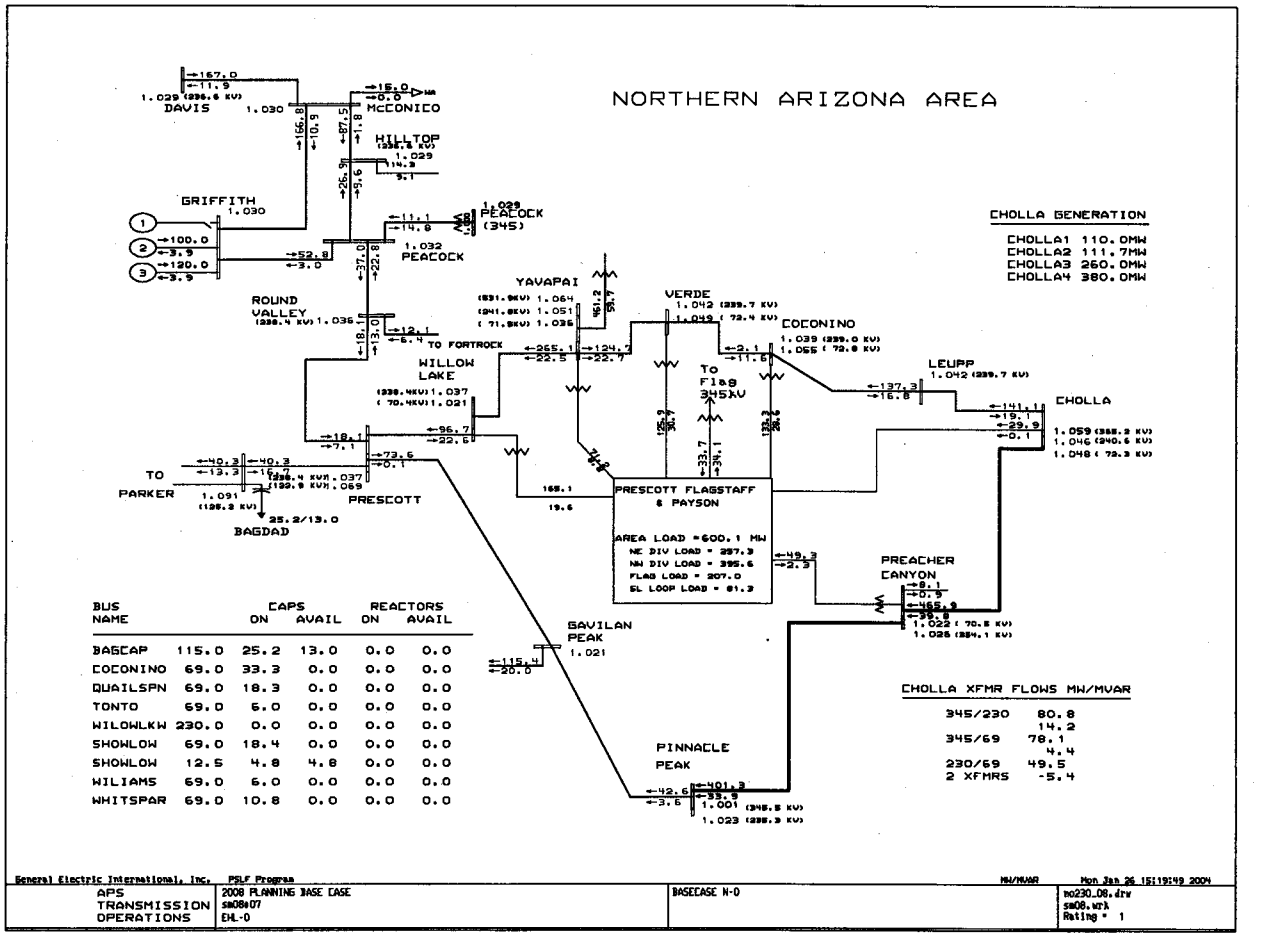

BUS NAME		CAPS ON	CAPS AVAIL	REACTORS ON	REACTORS AVAIL
BAGCAP	115.0	25.2	13.0	0.0	0.0
COCONINO	69.0	33.3	0.0	0.0	0.0
QUAILSPN	69.0	18.3	0.0	0.0	0.0
TONTO	69.0	6.0	0.0	0.0	0.0
WILOWLKW	230.0	0.0	0.0	0.0	0.0
SHOWLOW	69.0	18.4	0.0	0.0	0.0
SHOWLOW	12.5	4.8	4.8	0.0	0.0
WILIAMS	69.0	6.0	0.0	0.0	0.0
WHITSPAR	69.0	10.8	0.0	0.0	0.0

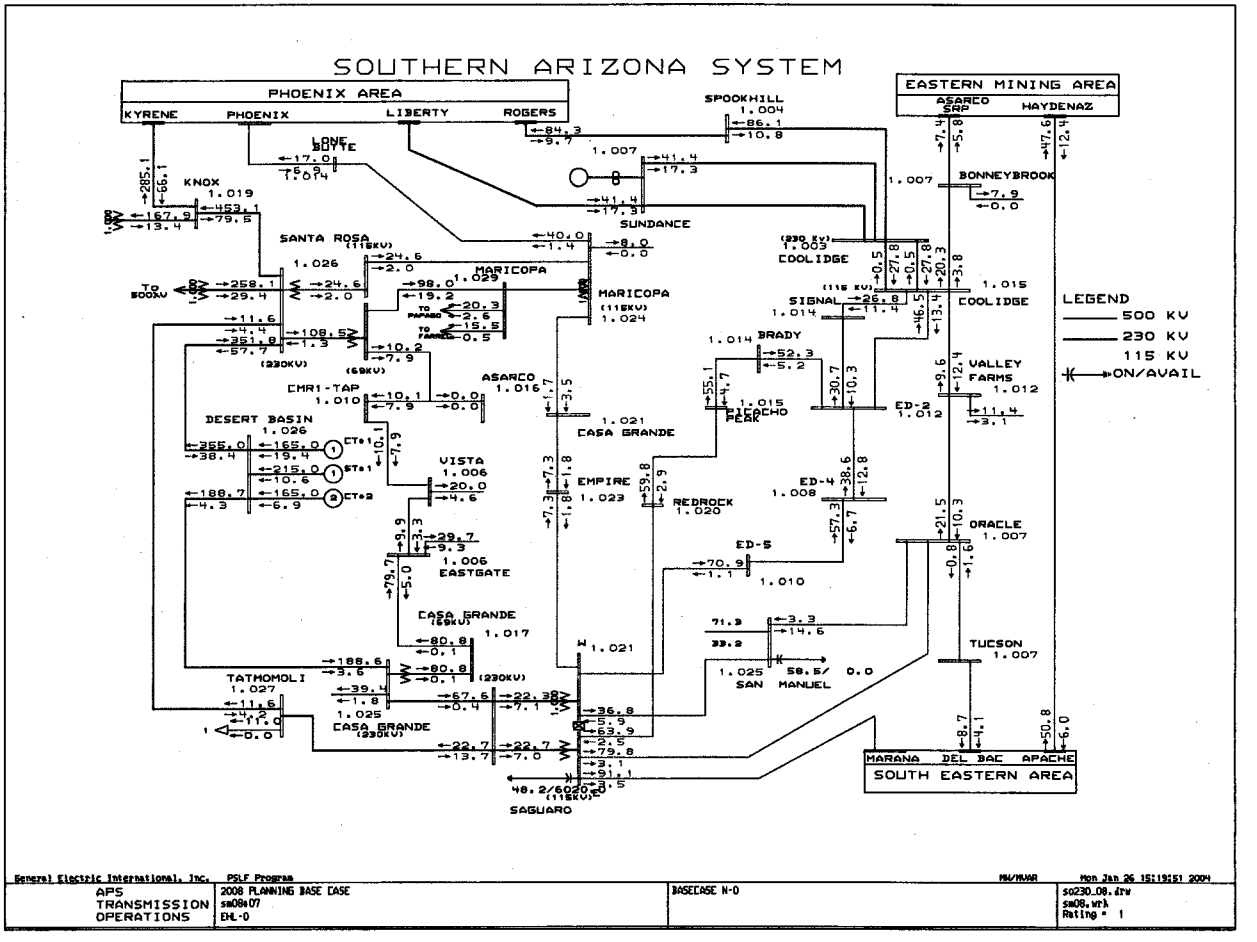
SOUTHERN ARIZONA SYSTEM
PHOENIX AREA
KYRENE
PHOENIX
LIBERTY
ROGERS
EASTERN MINING AREA
ASARCO SRP
HAYDENAZ
SPOOKHILL
1.004
LONE BUTTE
1.014
KNOX
1.019
SUNDANCE
1.007
BONNEYBROOK
SANTA ROSA
(115KV)
1.026
MARICOPA
1.029
MARICOPA
(115KV)
1.024
COOLIDGE
(230 KV)
1.003
COOLIDGE
(115 KV)
1.015
SIGNAL
1.014
BRADY
1.014
VALLEY FARMS
1.012
ED-2
1.012
PICACHO PEAK
1.015
ASARCO
1.016
CASA GRANDE
1.021
CMR1-TAP
1.010
DESERT BASIN
1.026
VISTA
1.006
EMPIRE
1.023
REDROCK
1.020
ED-4
1.008
ORACLE
1.007
ED-5
1.010
EASTGATE
1.006
CASA GRANDE
(69KV)
1.017
TUCSON
1.007
TATMOMOLI
1.027
CASA GRANDE
(230KV)
1.025
SAN MANUEL
SAGUARO
MARANA
DEL BAC
APACHE
SOUTH EASTERN AREA
LEGEND
500 KV
230 KV
115 KV
ON/AVAIL
General Electric International, Inc.
PSLF Program
APS
TRANSMISSION
OPERATIONS
2008 PLANNING BASE CASE
sw08407
EHL-0
BASECASE N-0
Mon Jan 26 15:19:51 2004
s0230_08.drw
sw08.wrk
Rating = 1

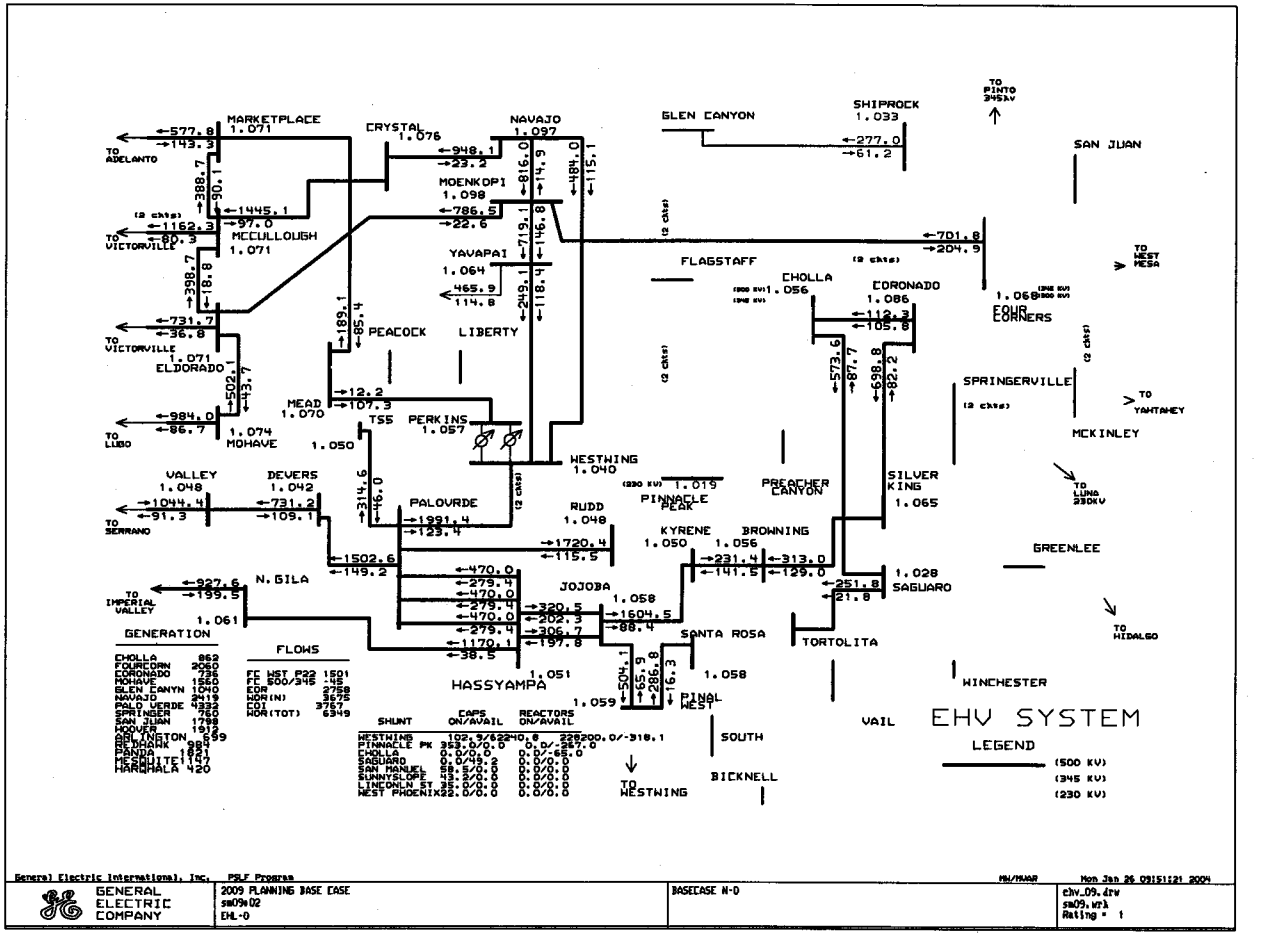
MARKETPLACE 1.071
CRYSTAL 1.076
NAVAJO 1.097
GLEN CANYON
SHIPROCK 1.033
TO PINTO 345kV
SAN JUAN
TO ADELANTO
MOENKOPI 1.098
MCCULLOUGH 1.071
TO VICTORVILLE
YAVAPAI 1.064
FLAGSTAFF
CHOLLA 1.056
CORONADO 1.086
FOUR CORNERS 1.068
TO WEST MESA
PEACOCK
LIBERTY
TO VICTORVILLE
ELDORADO 1.071
SPRINGERVILLE
TO YAHTAHEY
MEAD 1.070
TSS 1.050
PERKINS 1.057
TO LUGO
MOHAVE 1.074
MCKINLEY
WESTWING 1.040
VALLEY 1.048
DEVERS 1.042
PALOVERDE
RUDD 1.048
PINNACLE PEAK 1.019
PREACHER CANYON
SILVER KING 1.065
TO LUNA 230kV
TO SERRANO
KYRENE 1.050
BROWNING 1.056
GREENLEE
N. GILA
JOJOBA 1.058
SAGUARO 1.028
TO IMPERIAL VALLEY
1.061
SANTA ROSA
TORTOLITA
TO HIDALGO
HASSYAMPA 1.051
PINAL WEST 1.058
WINCHESTER
VAIL
SOUTH
BICKNELL
TO WESTWING
EHV SYSTEM
LEGEND
(500 KV)
(345 KV)
(230 KV)
GENERATION
CHOLLA 862
FOURCORN 2060
CORONADO 736
MOHAVE 1560
GLEN CANYN 1040
NAVAJO 2419
PALO VERDE 4332
SPRINGER 760
SAN JUAN 1798
HOOVER 1936
ARLINGTON 569
BLYTHE 98
PINNACLE 1821
PERIDOT 137
HARQUAHALA 420
FLOWS
FF WST P32 1501
FF 500/345 -45
EOR 2758
NOR(N) 3675
COI 3767
NOR(TOT) 6349
SHUNT CAPS ON/AVAIL REACTORS ON/AVAIL
WESTWING 102.5/62240.0 326200.0/-318.1
PINNACLE PK 353.0/0.0 0.0/-247.0
CHOLLA 0.0/0.0 0.0/-65.0
SAGUARO 0.0/49.2 0.0/0.0
SAN MANUEL 58.5/0.0 0.0/0.0
SUNNYSLOPE 13.2/0.0 0.0/0.0
LINCOLN ST 35.0/0.0 0.0/0.0
WEST PHOENIX 22.0/0.0 0.0/0.0
General Electric International, Inc.
PSLF Program
MW/MVAR
Mon Jan 26 09151121 2004
GENERAL ELECTRIC COMPANY
2009 PLANNING BASE CASE
sw09w02
EHL-0
BASECASE N-0
ehv_09.drw
sw09.wrk
Rating = 1

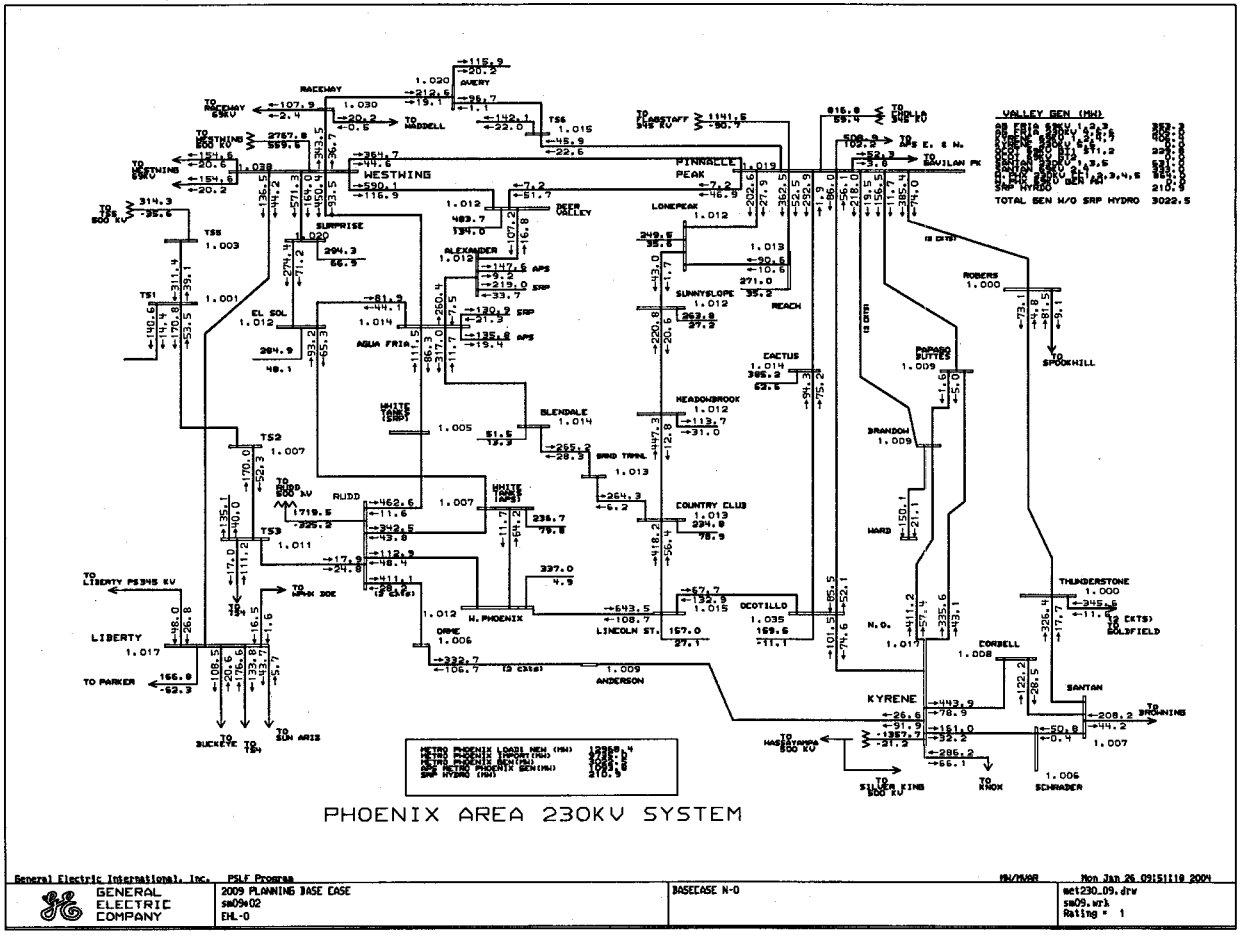
PHOENIX AREA 230KV SYSTEM
VALLEY GEN (MW)
TOTAL GEN W/O SRP HYDRO 3022.5
RACEWAY
AVERY
WESTWING
PINNACLE PEAK
LONEPEAK
SURPRISE
ALEXANDER
EL SOL
AGUA FRIA
SUNNYSLOPE
REACH
CACTUS
HEADOWBROOK
BLENDALE
COUNTRY CLUB
RUDD
W. PHOENIX
LINCOLN ST.
OCOTILLO
LIBERTY
TO PARKER
ANDERSON
KYRENE
CORBELL
SANTAN
THUNDERSTONE
ROBERS
BRANDON
HARD
N.O.
SCHRADER
TO SPOOKHILL
TO BROWNING
TO KNOX
TO SILVER KING 500 KV
TO HASSAYAMPA 500 KV
TO LIBERTY PS345 KV
TO SUN ARIZ
TO BUCKEYE
TO WPHX DOE
TO FLAGSTAFF 345 KV
TO CHOLLA 345 KV
TO BAVILAN PK
TO RUDD 500 KV
TO WESTWING 500 KV
TO TS5 500 KV
TO RACEWAY 69KV
TO WADDELL
TO SOLDFIELD
METRO PHOENIX LOADS NEW (MW) 12968.4
METRO PHOENIX IMPORT(MW) 9735.5
METRO PHOENIX GEN(MW) 3022.5
APS METRO PHOENIX GEN(MW) 1093.8
SRP HYDRO (MW) 210.9
General Electric International, Inc. PSLF Program
MW/MVAR
Mon Jan 26 09:51:10 2004
GENERAL ELECTRIC COMPANY
2009 PLANNING BASE CASE
sm09*02
EHL-0
BASECASE N-0
met230_09.drw
sm09.wrk
Rating = 1

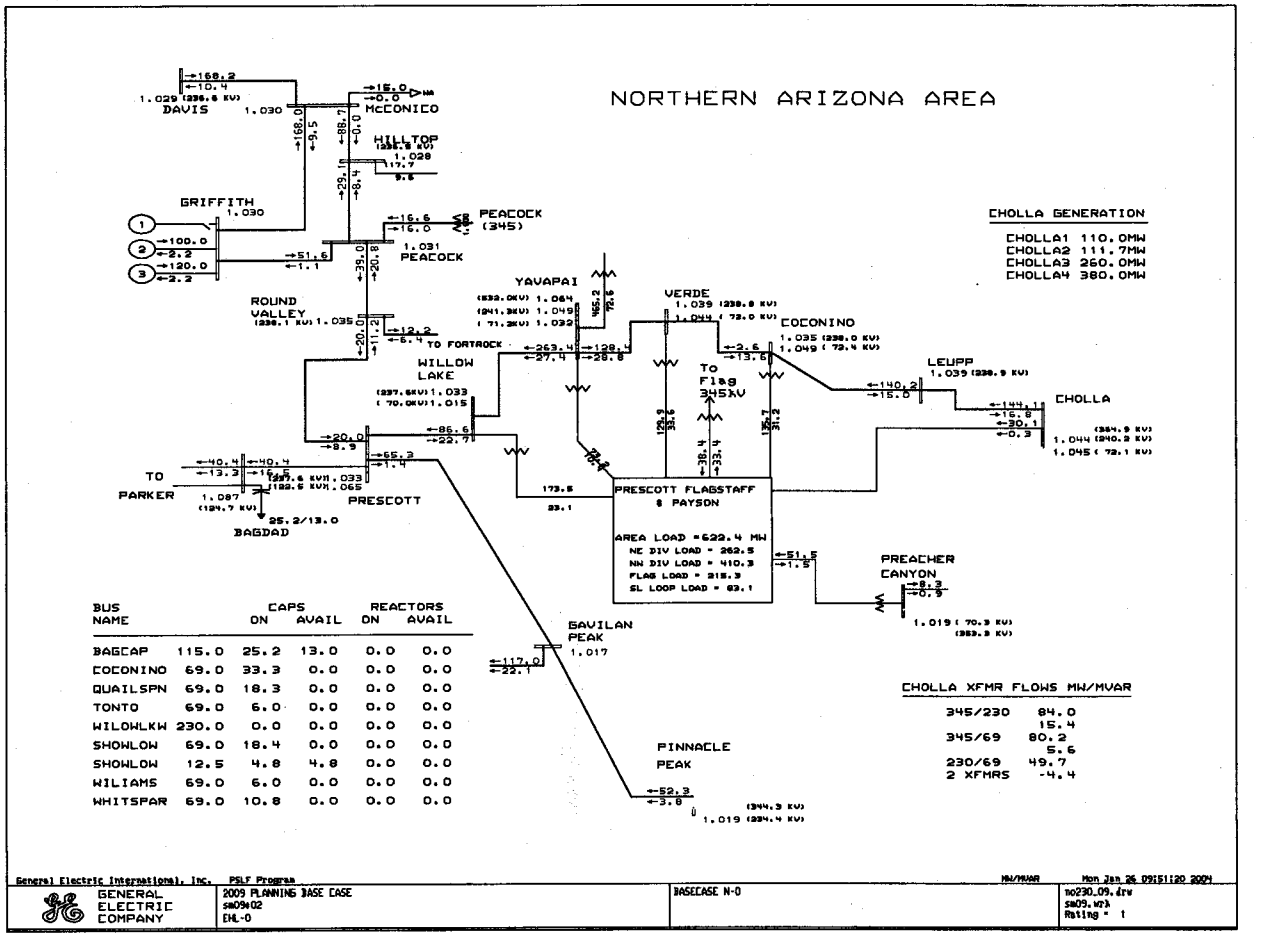

BUS NAME		CAPS ON	CAPS AVAIL	REACTORS ON	REACTORS AVAIL
BAGCAP	115.0	25.2	13.0	0.0	0.0
COCONINO	69.0	33.3	0.0	0.0	0.0
QUAILSPN	69.0	18.3	0.0	0.0	0.0
TONTO	69.0	6.0	0.0	0.0	0.0
WILOWLKW	230.0	0.0	0.0	0.0	0.0
SHOWLOW	69.0	18.4	0.0	0.0	0.0
SHOWLOW	12.5	4.8	4.8	0.0	0.0
WILIAMS	69.0	6.0	0.0	0.0	0.0
WHITSPAR	69.0	10.8	0.0	0.0	0.0

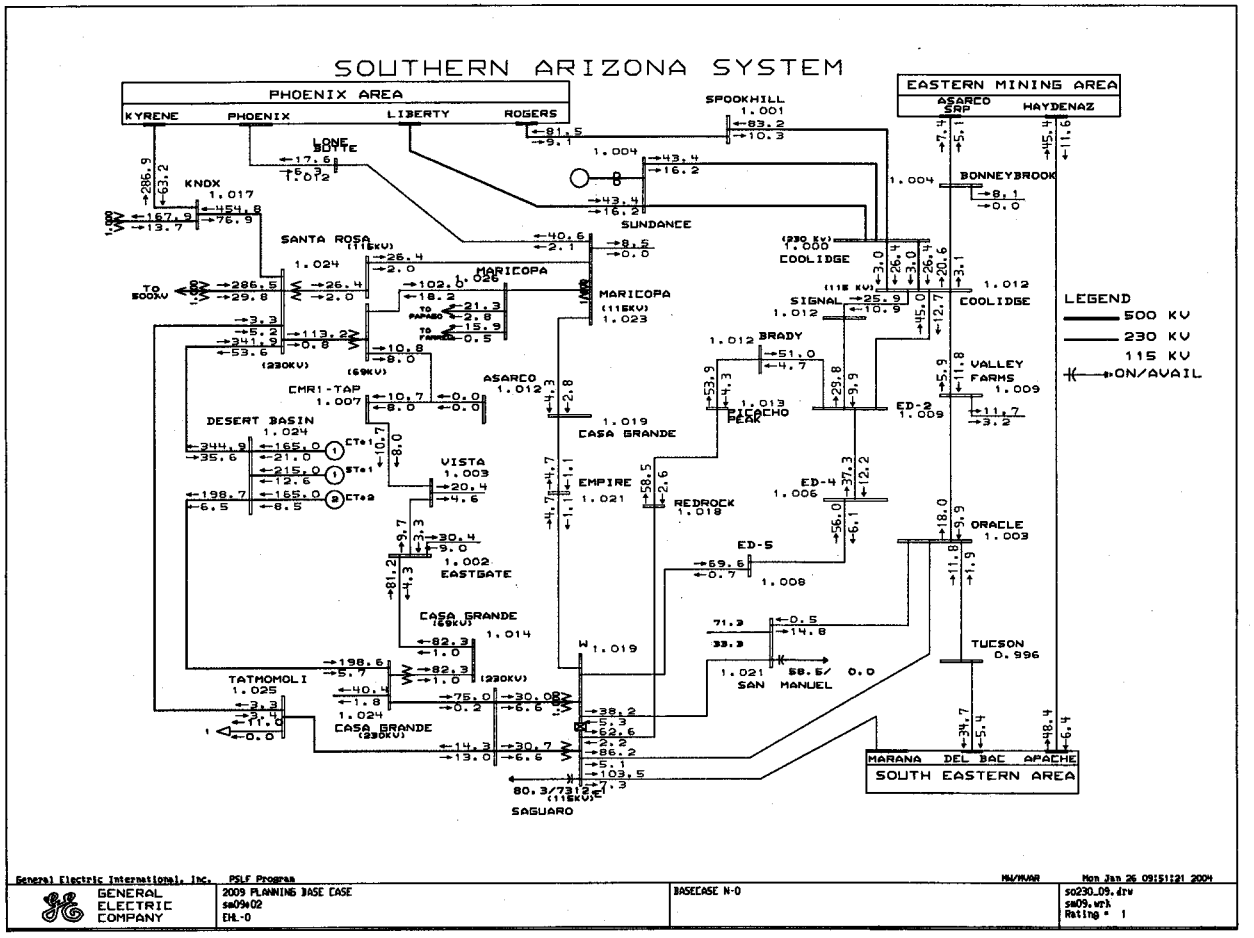
SOUTHERN ARIZONA SYSTEM
PHOENIX AREA
KYRENE
PHOENIX
LIBERTY
ROGERS
EASTERN MINING AREA
ASARCO SRP
HAYDENAZ
SPOOKHILL
LONE BUTTE
KNOX
SUNDANCE
BONNEYBROOK
SANTA ROSA
MARICOPA
COOLIDGE
SIGNAL
BRADY
VALLEY FARMS
CMR1-TAP
ASARCO
CASA GRANDE
PICACHO PEAK
ED-2
DESERT BASIN
VISTA
EMPIRE
REDROCK
ED-4
ORACLE
EASTGATE
ED-5
TUCSON
TATMOMOLI
SAN MANUEL
SAGUARO
MARANA
DEL BAC
APACHE
SOUTH EASTERN AREA
LEGEND
500 KV
230 KV
115 KV
ON/AVAIL
General Electric International, Inc.
PSLF Program
GENERAL ELECTRIC COMPANY
2009 PLANNING BASE CASE
sa09e02
EHL-0
BASECASE N-0
Mon Jan 26 09:51:21 2004
so230_09.drw
sa09.wrk
Rating = 1

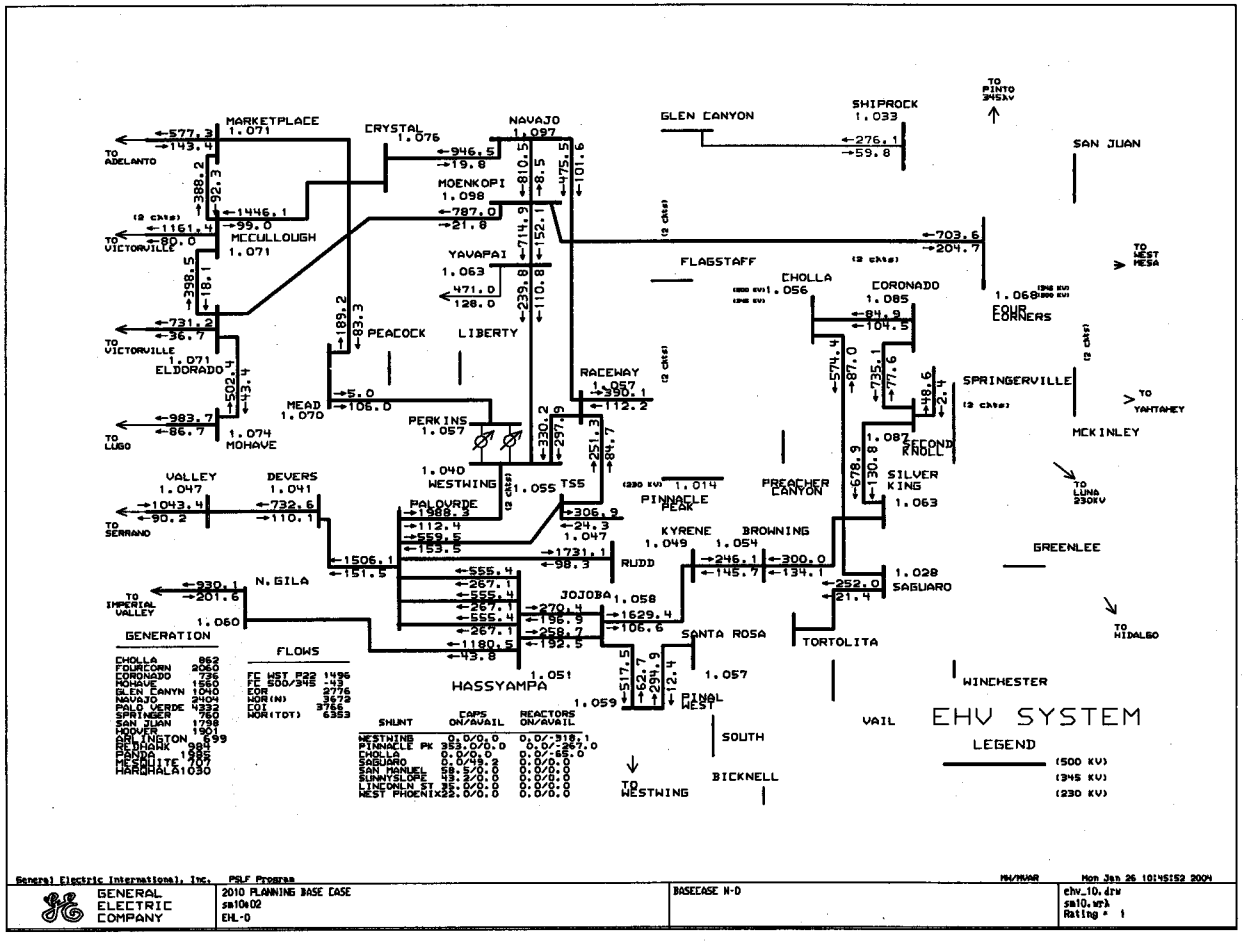
MARKETPLACE 1.071
CRYSTAL 1.076
NAVAJO 1.097
GLEN CANYON
SHIPROCK 1.033
TO PINTO 345kV
SAN JUAN
TO ADELANTO
MOENKOPI 1.098
MCCULLOUGH 1.071
TO VICTORVILLE
YAVAPAI 1.063
FLAGSTAFF
CHOLLA 1.056
CORONADO 1.085
FOUR CORNERS
TO WEST MESA
PEACOCK
LIBERTY
ELDORADO 1.071
RACEWAY 1.057
SPRINGERVILLE
TO YAHTAHEY
MEAD 1.070
PERKINS 1.057
MCKINLEY
TO LUGO
MOHAVE 1.074
SECOND KNOLL 1.087
WESTWING 1.040
TSS 1.055
PINNACLE PEAK 1.014
PREACHER CANYON
SILVER KING 1.063
TO LUNA 230KV
VALLEY 1.047
DEVERS 1.041
TO SERRANO
PALOVERDE
KYRENE 1.049
BROWNING 1.054
GREENLEE
RUDD
N. GILA
TO IMPERIAL VALLEY
JOJOBA 1.058
SAGUARO 1.028
TO HIDALGO
SANTA ROSA
TORTOLITA
HASSYAMPA 1.051
PINAL WEST 1.057
WINCHESTER
VAIL
SOUTH
BICKNELL
TO WESTWING
EHV SYSTEM
LEGEND
(500 KV)
(345 KV)
(230 KV)
GENERATION
CHOLLA 862
FOURCORN 2060
CORONADO 736
MOHAVE 1560
GLEN CANYN 1040
NAVAJO 2404
PALO VERDE 4332
SPRINGER 760
SAN JUAN 1798
HOOVER 1901
ARLINGTON 699
REDHAWK 984
PANDA 1985
MESQUITE 707
HARQHALA 1030
FLOWS
FC WST P22 1496
FC 500/345 -43
EOR 2776
WOR(N) 3672
COI 3766
WOR(TOT) 6353
SHUNT
CAPS ON/AVAIL
REACTORS ON/AVAIL
WESTWING 0.0/0.0 0.0/-318.1
PINNACLE PK 353.0/0.0 0.0/-267.0
CHOLLA 0.0/0.0 0.0/-65.0
SAGUARO 0.0/49.2 0.0/0.0
SAN MANUEL 58.5/0.0 0.0/0.0
SUNNYSLOPE 43.2/0.0 0.0/0.0
LINCOLN ST 35.0/0.0 0.0/0.0
WEST PHOENIX 22.0/0.0 0.0/0.0
General Electric International, Inc. PSLF Program
MW/MVAR
Mon Jan 26 10:45:52 2004
GENERAL ELECTRIC COMPANY
2010 PLANNING BASE CASE
sm10a02
EHL-0
BASECASE N-0
ehv_10.drw
sm10.wrk
Rating = 1

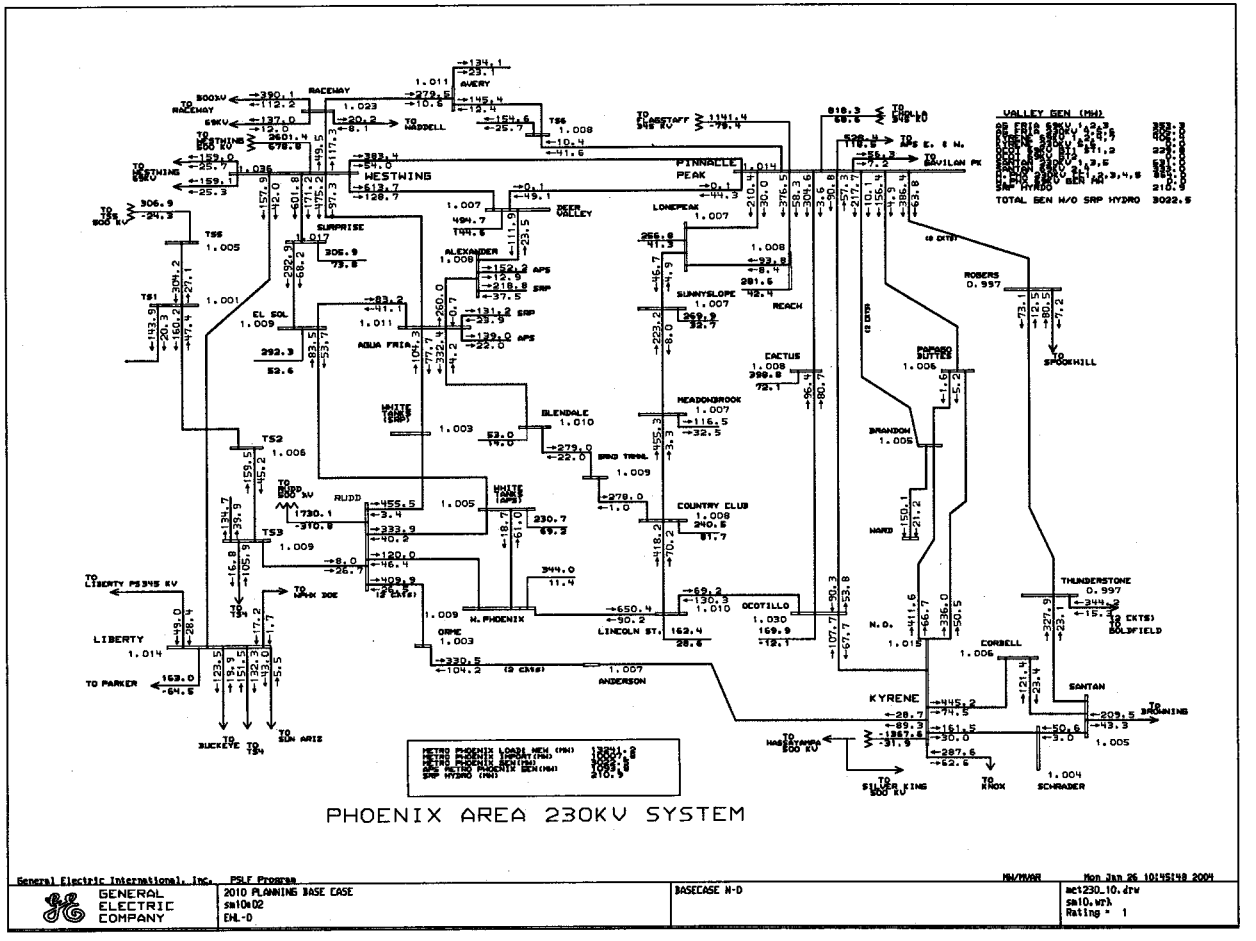

General Electric International, Inc. PSLF Program

GENERAL ELECTRIC COMPANY

2010 PLANNING BASE CASE
sa10d02
EHL-D

BASECASE N-D

MW/MVAR

Mon Jan 26 10:45:49 2004

ac1230.10.drw
sa10.wrk
Rating = 1

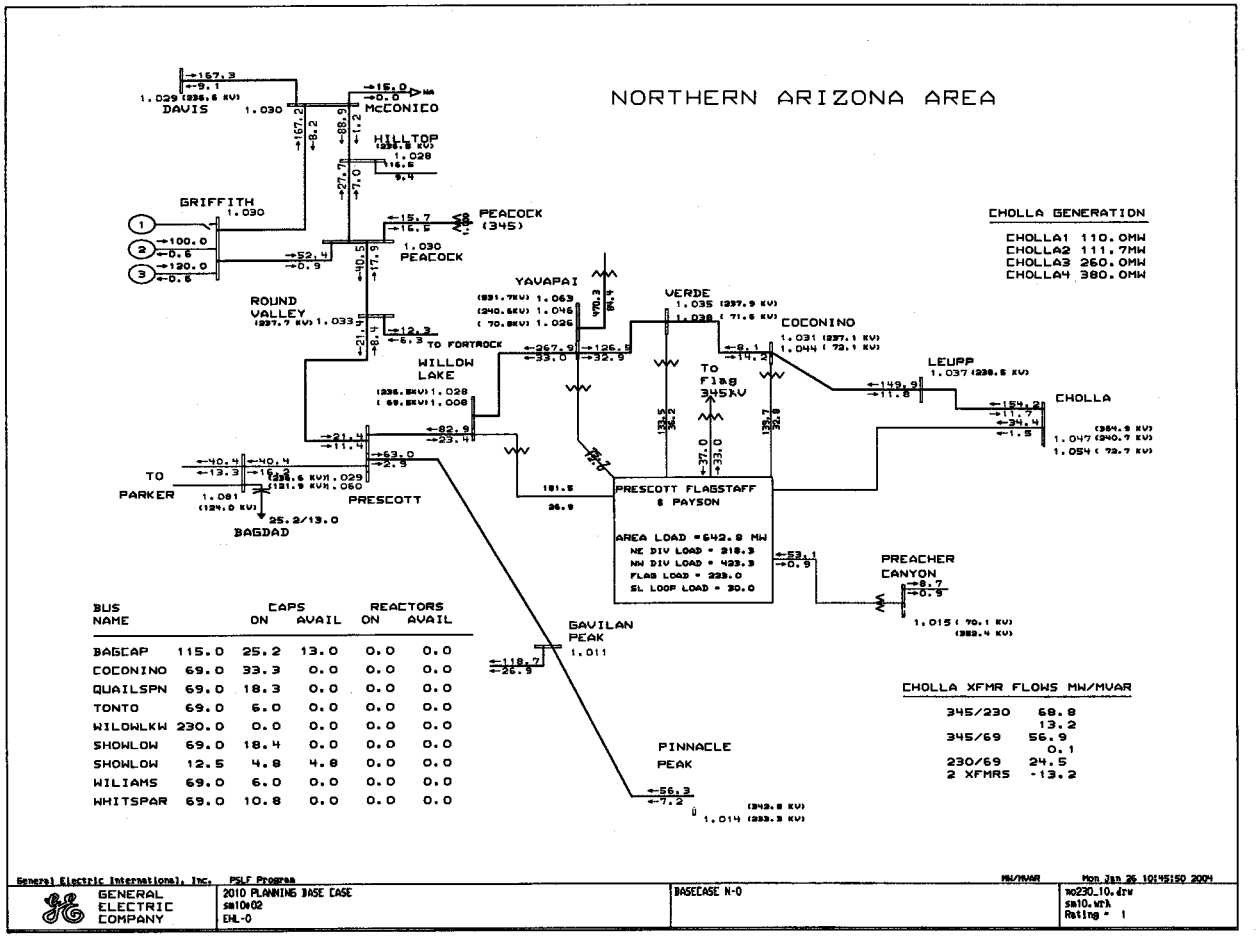

BUS NAME		CAPS ON	CAPS AVAIL	REACTORS ON	REACTORS AVAIL
BAGCAP	115.0	25.2	13.0	0.0	0.0
COCONINO	69.0	33.3	0.0	0.0	0.0
QUAILSPN	69.0	18.3	0.0	0.0	0.0
TONTO	69.0	6.0	0.0	0.0	0.0
WILOWLKW	230.0	0.0	0.0	0.0	0.0
SHOWLOW	69.0	18.4	0.0	0.0	0.0
SHOWLOW	12.5	4.8	4.8	0.0	0.0
WILIAMS	69.0	6.0	0.0	0.0	0.0
WHITSPAR	69.0	10.8	0.0	0.0	0.0

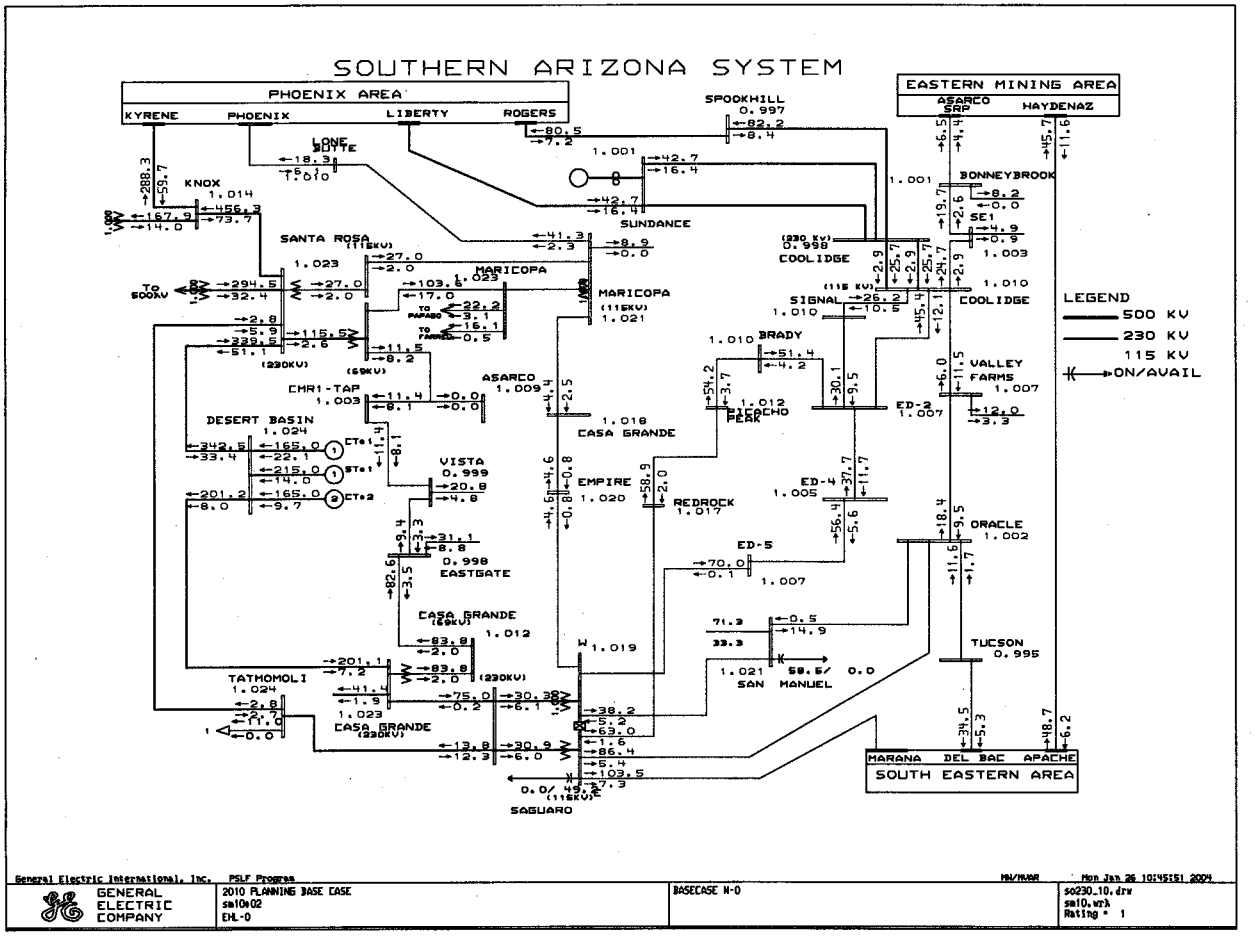
SOUTHERN ARIZONA SYSTEM
PHOENIX AREA
KYRENE
PHOENIX
LIBERTY
ROGERS
EASTERN MINING AREA
ASARCO SRP
HAYDENAZ
SPOOKHILL 0.997
LONE BUTTE 1.010
KNOX 1.014
SUNDANCE
BONNEYBROOK
SE1
SANTA ROSA (115KV) 1.023
MARICOPA 1.023
MARICOPA (115KV) 1.021
COOLIDGE (230 KV) 0.958
COOLIDGE (115 KV) 1.010
SIGNAL 1.010
BRADY 1.010
VALLEY FARMS 1.007
ED-2 1.007
PINACHO PEAK 1.012
ASARCO 1.009
CASA GRANDE 1.018
CHRI-TAP 1.003
DESERT BASIN 1.024
VISTA 0.999
EMPIRE 1.020
REDROCK 1.017
ED-4 1.005
ORACLE 1.002
ED-5 1.007
EASTGATE 0.998
CASA GRANDE (69KV) 1.012
TATMOMOLI 1.024
CASA GRANDE (230KV) 1.023
SAN MANUEL 1.021
TUCSON 0.995
SAGUARO
MARANA
DEL BAC
APACHE
SOUTH EASTERN AREA
LEGEND
500 KV
230 KV
115 KV
ON/AVAIL
General Electric International, Inc. PSLF Program
MW/MVAR
Mon Jan 26 10:45:51 2004
GENERAL ELECTRIC COMPANY
2010 PLANNING BASE CASE
sa10x02
EHL-0
BASECASE N-0
so230_10.drw
sa10.wrk
Rating = 1

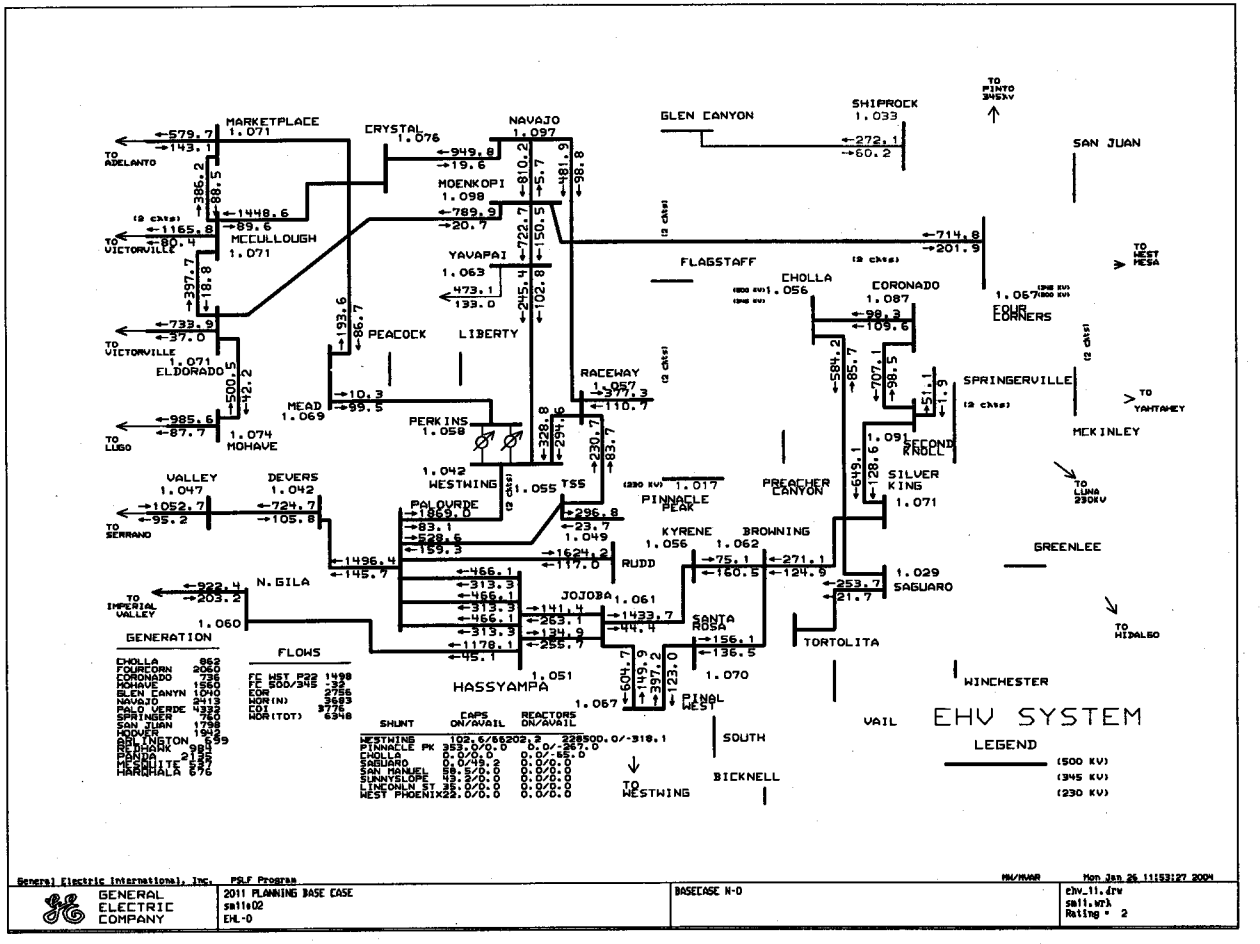
EHV SYSTEM
LEGEND
(500 KV)
(345 KV)
(230 KV)
MARKETPLACE 1.071
CRYSTAL 1.076
NAVAJO 1.097
GLEN CANYON
SHIPROCK 1.033
SAN JUAN
MOENKOPI 1.098
MCCULLOUGH 1.071
YAVAPAI 1.063
FLAGSTAFF
CHOLLA 1.056
CORONADO 1.087
FOUR CORNERS
PEACOCK
LIBERTY
ELDORADO 1.071
MOHAVE 1.074
MEAD 1.069
PERKINS 1.058
RACEWAY 1.057
SPRINGERVILLE
SECOND KNOLL
MCKINLEY
WESTWING 1.042
TSS 1.055
PINNACLE PEAK 1.017
PREACHER CANYON
SILVER KING 1.071
VALLEY 1.047
DEVERS 1.042
PALOVERDE
KYRENE 1.056
BROWNING 1.062
RUDD
GREENLEE
N. GILA 1.060
JOJOBA 1.061
SAGUARO 1.029
SANTA ROSA
TORTOLITA
HASSYAMPA 1.051
PINAL WEST 1.070
WINCHESTER
VAIL
SOUTH
BICKNELL
TO WESTWING
TO ADELANTO
TO VICTORVILLE
TO LUGO
TO SERRANO
TO IMPERIAL VALLEY
TO PINTO 345KV
TO WEST MESA
TO YAHTAHEY
TO LUNA 230KV
TO HIDALGO
GENERATION
CHOLLA 862
FOURCORN 2060
CORONADO 736
MOHAVE 1656
GLEN CANYN 1050
NAVAJO 2413
PALO VERDE 4332
SPRINGER 760
SAN JUAN 1798
HOOVER 1942
NEW ENGLAND 1649
PEDRAK 983
FORDA 2135
TESQUITE 657
HARCHALA 676
FLOWS
FC WST 522 1498
FC EOD/345 -32
COR 2756
NOR(N) 3683
COI 3776
NOR(TOT) 6348
SHUNT CAPS ON/AVAIL REACTORS ON/AVAIL
WESTWING 102.6/66202.3 228500.0/-318.1
PINNACLE PK 353.0/0.0 0.0/-267.0
CHOLLA 0.0/0.0 0.0/-65.0
SAGUARO 0.0/45.2 0.0/0.0
SAN MANUEL 59.5/0.0 0.0/0.0
SUNNYSLOPE 43.2/0.0 0.0/0.0
LINCOLN ST 35.0/0.0 0.0/0.0
WEST PHOENIX 22.0/0.0 0.0/0.0
General Electric International, Inc.
PSLF Program
MW/MVAR
Mon Jan 26 11:53:27 2004
GENERAL ELECTRIC COMPANY
2011 PLANNING BASE CASE
salt02
EHL-0
BASECASE N-0
ehv_11.drw
salt.wrk
Rating = 2

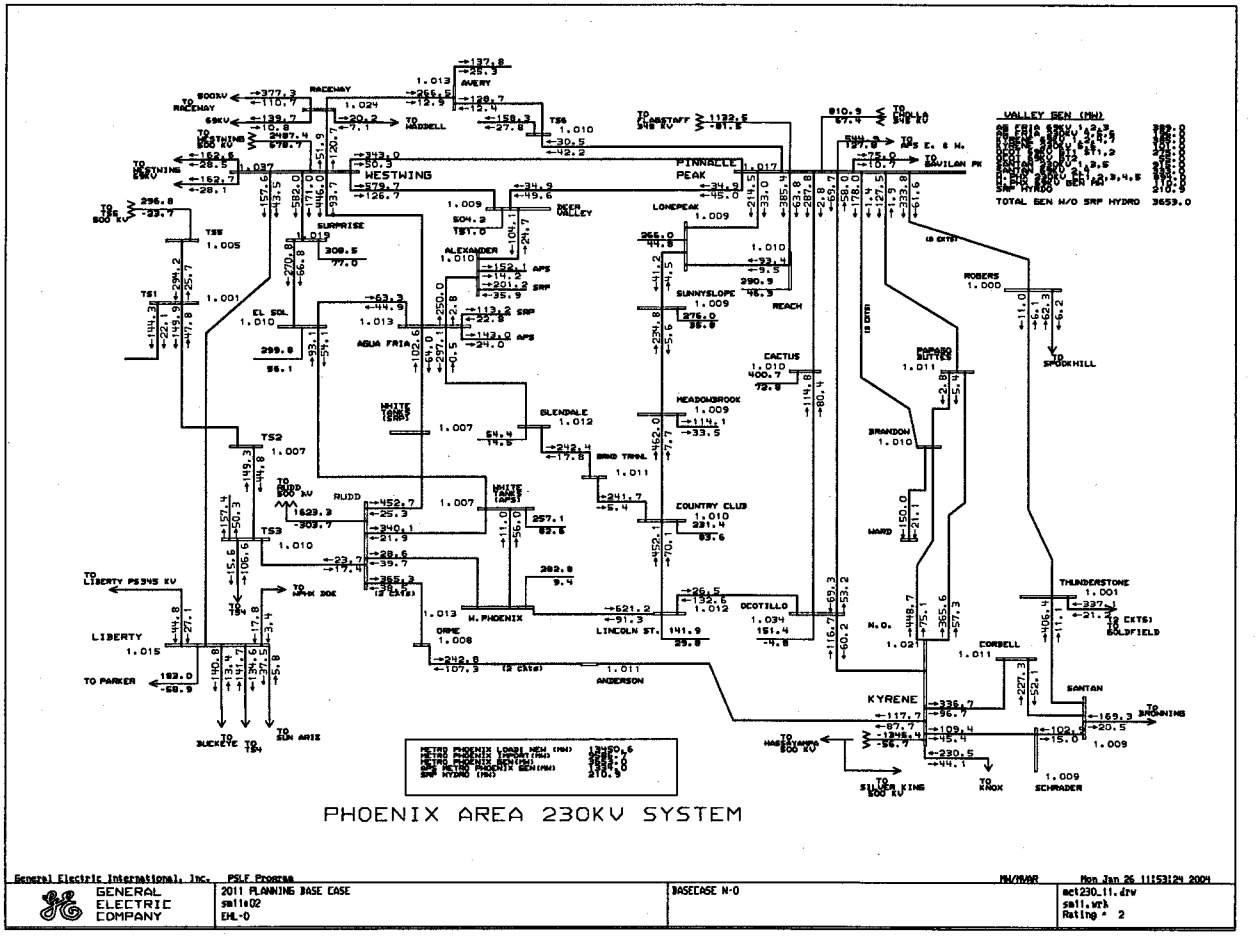
PHOENIX AREA 230KV SYSTEM
General Electric International, Inc.
PSLF Program
GENERAL ELECTRIC COMPANY
2011 PLANNING BASE CASE
sall02
EHL-0
BASECASE N-0
act230_11.drw
sall.wrk
Rating = 2
Mon Jan 26 11:53:24 2004
VALLEY GEN (MW)
TOTAL GEN W/O SRP HYDRO 3653.0
WESTWING
PINNACLE PEAK
LONEPEAK
SUNNYSLOPE
REACH
CACTUS
MEADOWBROOK
COUNTRY CLUB
OCOTILLO
LINCOLN ST.
W. PHOENIX
ORME
ANDERSON
RUDD
WHITE TANKS
BLENDALE
ALEXANDER
DEER VALLEY
SURPRISE
EL SOL
AGUA FRIA
LIBERTY
KYRENE
CORBELL
SANTAN
THUNDERSTONE
BRANDON
PAPAGO BUTTES
ROBERS
WARD
N.O.
RACEWAY
AVERY
TO MADDELL
TO GAVILAN PK
TO SPOKHILL
TO GOLDFIELD
TO PARKER
TO BUCKEYE
TO SUN ARIZ
TO HASSAYAMPA 500 KV
TO SILVER KING 500 KV
TO KNOX
SCHRADER
TO BROWNING

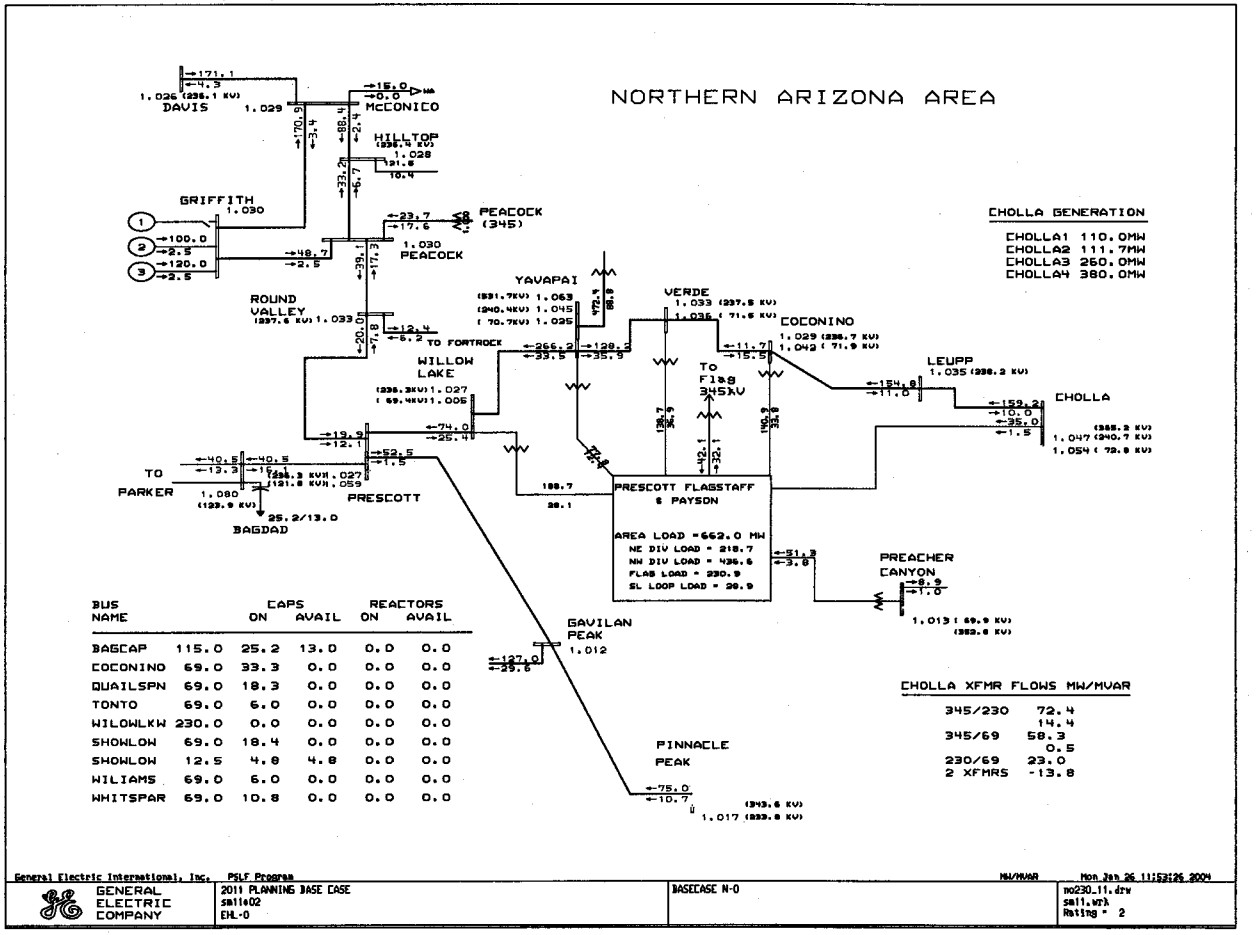

BUS NAME		CAPS ON	CAPS AVAIL	REACTORS ON	REACTORS AVAIL
BAGCAP	115.0	25.2	13.0	0.0	0.0
COCONINO	69.0	33.3	0.0	0.0	0.0
QUAILSPN	69.0	18.3	0.0	0.0	0.0
TONTO	69.0	6.0	0.0	0.0	0.0
WILOWLKW	230.0	0.0	0.0	0.0	0.0
SHOWLOW	69.0	18.4	0.0	0.0	0.0
SHOWLOW	12.5	4.8	4.8	0.0	0.0
WILIAMS	69.0	6.0	0.0	0.0	0.0
WHITSPAR	69.0	10.8	0.0	0.0	0.0

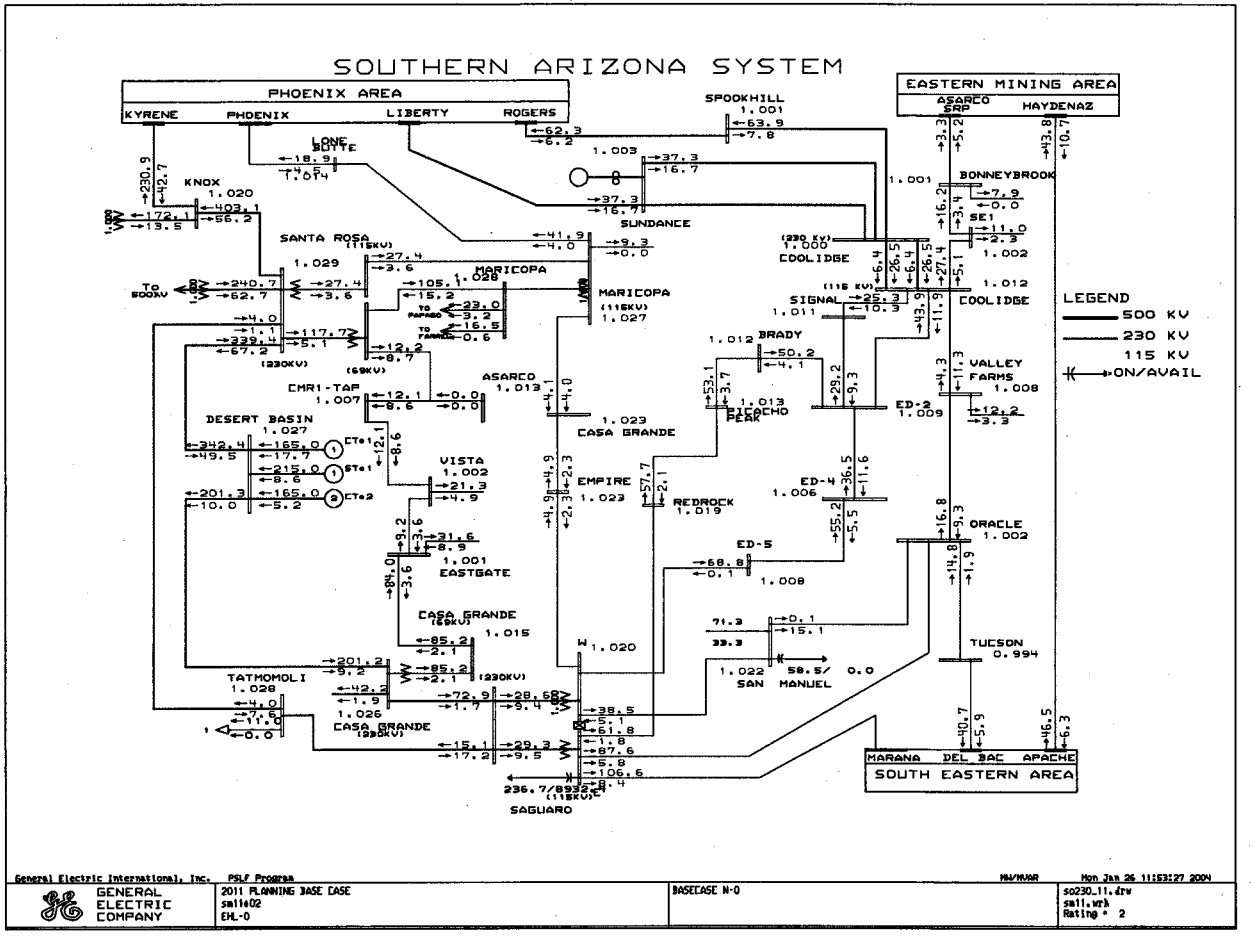
SOUTHERN ARIZONA SYSTEM
PHOENIX AREA
KYRENE
PHOENIX
LIBERTY
ROGERS
EASTERN MINING AREA
ASARCO
HAYDENAZ
SPOOKHILL
1.001
LONE BUTE
1.014
KNOX
1.020
SUNDANCE
BONNEYBROOK
SE1
1.002
SANTA ROSA
(115KV)
1.029
MARICOPA
1.028
MARICOPA
(115KV)
1.027
COOLIDGE
1.000
COOLIDGE
1.012
SIGNAL
1.011
BRADY
1.012
VALLEY FARMS
1.008
ED-9
1.009
ASARCO
1.013
CMR1-TAP
1.007
DESERT BASIN
1.027
CASA GRANDE
1.023
PICACHO PEAK
1.013
VISTA
1.002
EMPIRE
1.023
REDROCK
1.019
ED-4
1.006
ORACLE
1.002
ED-5
1.008
EASTGATE
1.001
CASA GRANDE
(69KV)
1.015
TUCSON
0.994
TATMOMOLI
1.028
CASA GRANDE
(230KV)
1.026
SAN MANUEL
1.022
SAGUARO
MARANA
DEL BAC
APACHE
SOUTH EASTERN AREA
LEGEND
500 KV
230 KV
115 KV
ON/AVAIL
General Electric International, Inc.
PSLF Program
MW/MVAR
Mon Jan 26 11:53:27 2004
GENERAL ELECTRIC COMPANY
2011 PLANNING BASE CASE
small02
EHL-0
BASECASE N-0
so230_11.drw
small.wrk
Rating = 2

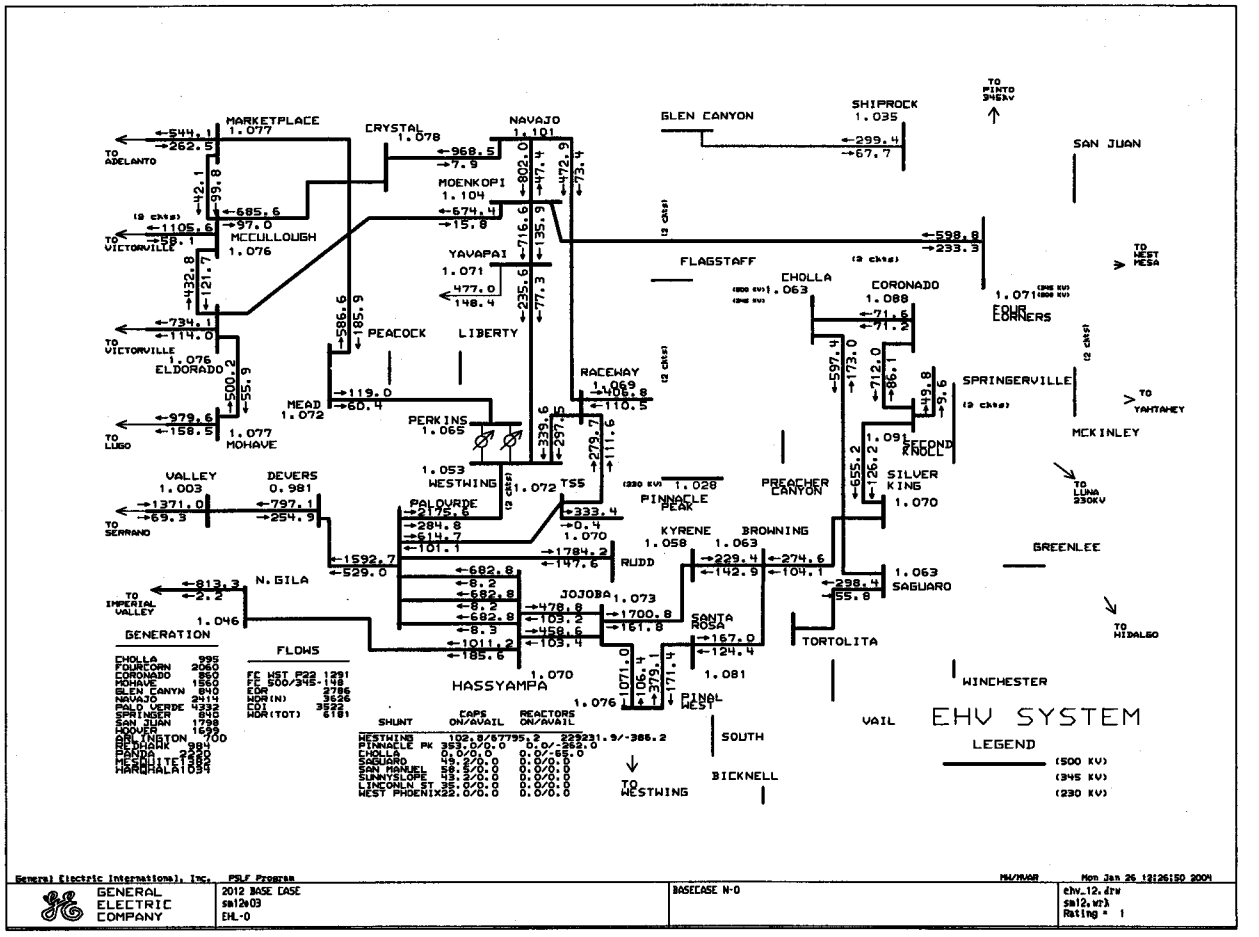

MARKETPLACE 1.077
CRYSTAL 1.078
NAVAJO 1.101
GLEN CANYON
SHIPROCK 1.035
SAN JUAN
TO PINTO 345KV
TO ADELANTO
MOENKOPI 1.104
MCCULLOUGH 1.076
TO VICTORVILLE
YAVAPAI 1.071
FLAGSTAFF
CHOLLA 1.063
CORONADO 1.088
FOUR CORNERS
TO WEST MESA
PEACOCK
LIBERTY
ELDORADO 1.076
RACEWAY 1.069
SPRINGERVILLE
TO YAHTAHEY
MEAD 1.072
PERKINS 1.065
MOHAVE 1.077
TO LUGO
MCKINLEY
SECOND KNOLL 1.091
WESTWING 1.053
TS5 1.072
PINNACLE PEAK 1.028
PREACHER CANYON
SILVER KING 1.070
TO LUNA 230KV
VALLEY 1.003
DEVERS 0.981
TO SERRANO
PALOVRDE
KYRENE 1.058
BROWNING 1.063
GREENLEE
RUDD
N. GILA
JOJOBA 1.073
SAGUARO 1.063
TO IMPERIAL VALLEY
SANTA ROSA
TO HIDALGO
TORTOLITA
HASSYAMPA 1.070
PINAL WEST 1.081
WINCHESTER
VAIL
SOUTH
BICKNELL
TO WESTWING
EHV SYSTEM
LEGEND
(500 KV)
(345 KV)
(230 KV)
GENERATION
CHOLLA 995
FOURCORN 2060
CORONADO 860
MOHAVE 1560
GLEN CANYN 840
NAVAJO 2414
PALO VERDE 4332
SPRINGER 840
SAN JUAN 1798
WOOVER 1699
ARLINGTON 700
REDHAWK 984
PANDA 2220
MESQUITE 1382
HARQHALA 1034
FLOWS
FC WST P22 1291
FC 500/345-148
EOR 2786
WOR(N) 3626
COI 3522
WOR(TOT) 6181
SHUNT
CAPS ON/AVAIL
REACTORS ON/AVAIL
WESTWING 102.8/67795.2 229231.9/-386.2
PINNACLE PK 353.0/0.0 0.0/-262.0
CHOLLA 0.0/0.0 0.0/-65.0
SAGUARO 49.2/0.0 0.0/0.0
SAN MANUEL 58.5/0.0 0.0/0.0
SUNNYSLOPE 43.2/0.0 0.0/0.0
LINCOLN ST 35.0/0.0 0.0/0.0
WEST PHOENIX 22.0/0.0 0.0/0.0
General Electric International, Inc.
PSLF Program
MW/MVAR
Mon Jan 26 12:26:50 2004
GENERAL ELECTRIC COMPANY
2012 BASE CASE
sm12e03
EHL-0
BASECASE N-0
ehv_12.drw
sm12.wrk
Rating = 1

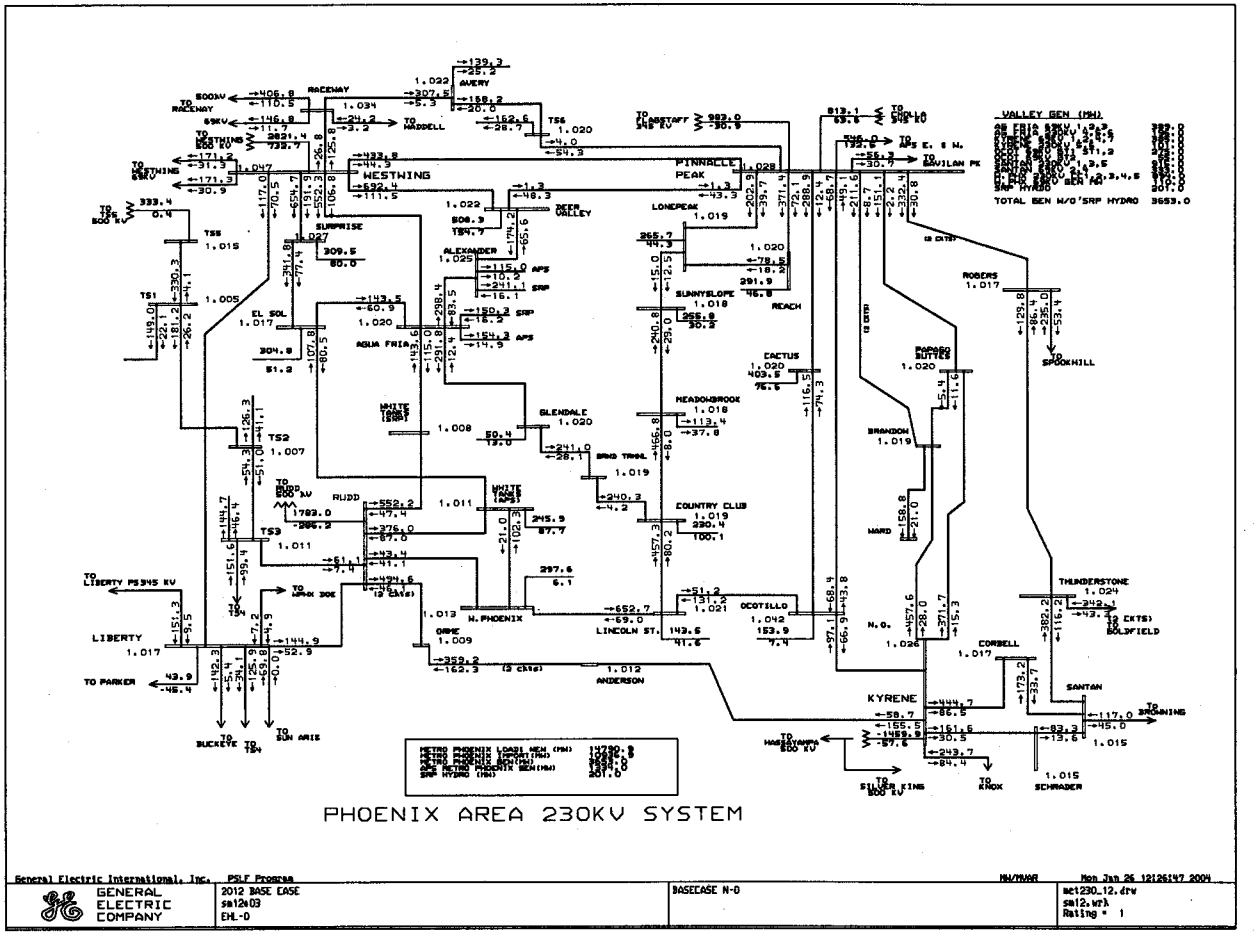
PHOENIX AREA 230KV SYSTEM
General Electric International, Inc.
PSLF Program
GENERAL ELECTRIC COMPANY
2012 BASE CASE
sa12d03
EHL-0
BASECASE N-0
Mon Jan 26 12:26:47 2004
mct230_12.drw
sa12.wrk
Rating = 1
VALLEY GEN (MW)
TOTAL GEN W/O'SRP HYDRO 3653.0
WESTWING
PINNACLE PEAK
LONEPEAK
DEER VALLEY
ALEXANDER
SURPRISE
EL SOL
AGUA FRIA
SUNNYSLOPE
REACH
CACTUS
ROBERS
PAPAGO BUTTES
SPOOKHILL
MEADOWBROOK
GLENDALE
BRANDON
RUDD
COUNTRY CLUB
WARD
THUNDERSTONE
OCOTILLO
W.PHOENIX
LINCOLN ST.
N.O.
CORBELL
SANTAN
KYRENE
LIBERTY
ANDERSON
TO RACEWAY
TO WADDELL
TO WESTWING
TO FLAGSTAFF
TO GAVILAN PK
TO SPOOKHILL
TO GOLDFIELD
TO BROWNING
TO LIBERTY
TO PARKER
TO BUCKEYE
TO SUN ARIE
TO HASSAYAMPA
TO SILVER KING
TO KNOX
SCHRADER

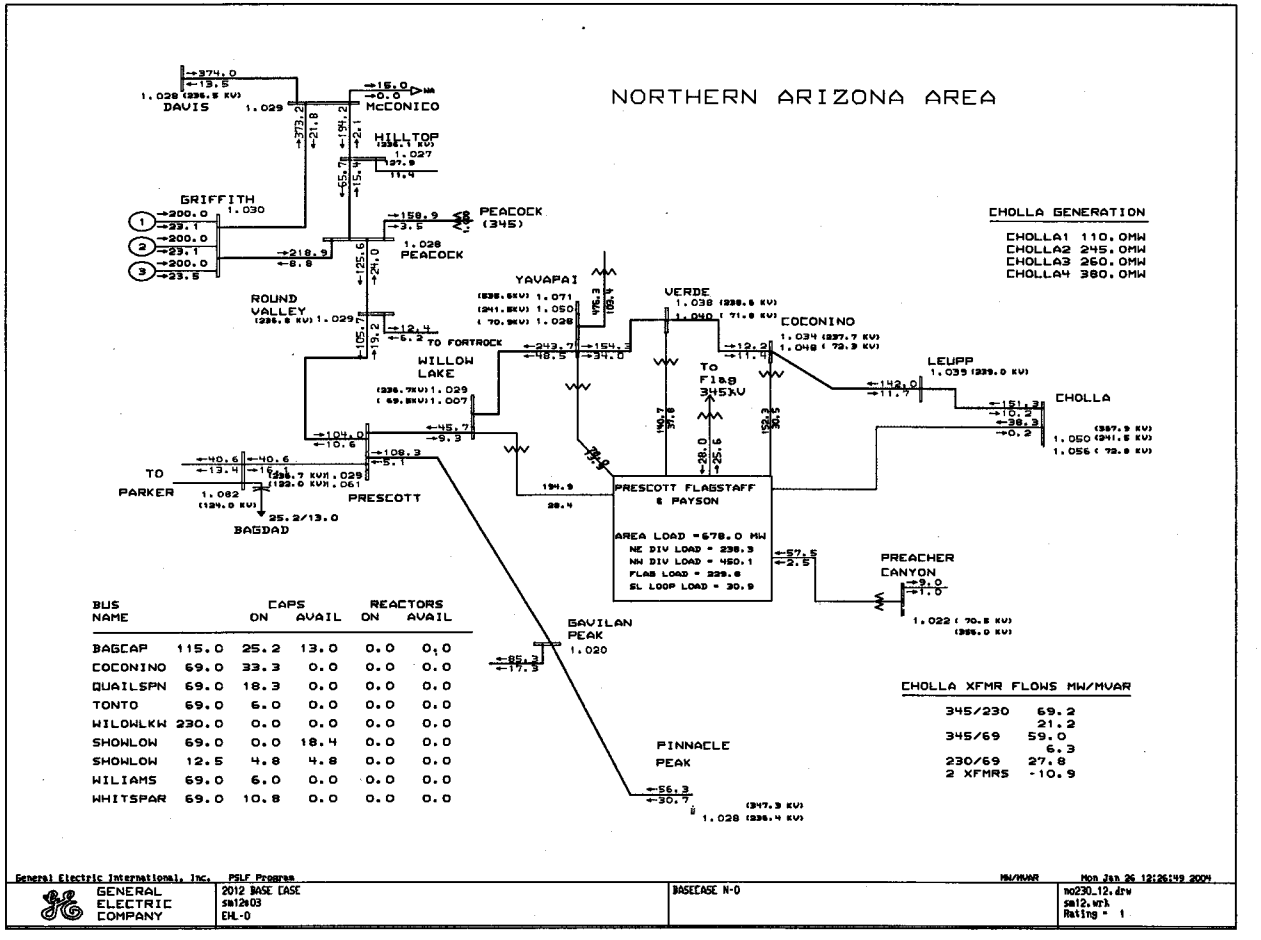

BUS NAME		CAPS ON	CAPS AVAIL	REACTORS ON	REACTORS AVAIL
BAGCAP	115.0	25.2	13.0	0.0	0.0
COCONINO	69.0	33.3	0.0	0.0	0.0
QUAILSPN	69.0	18.3	0.0	0.0	0.0
TONTO	69.0	6.0	0.0	0.0	0.0
WILDWLKW	230.0	0.0	0.0	0.0	0.0
SHOWLOW	69.0	0.0	18.4	0.0	0.0
SHOWLOW	12.5	4.8	4.8	0.0	0.0
WILIAMS	69.0	6.0	0.0	0.0	0.0
WHITSPAR	69.0	10.8	0.0	0.0	0.0

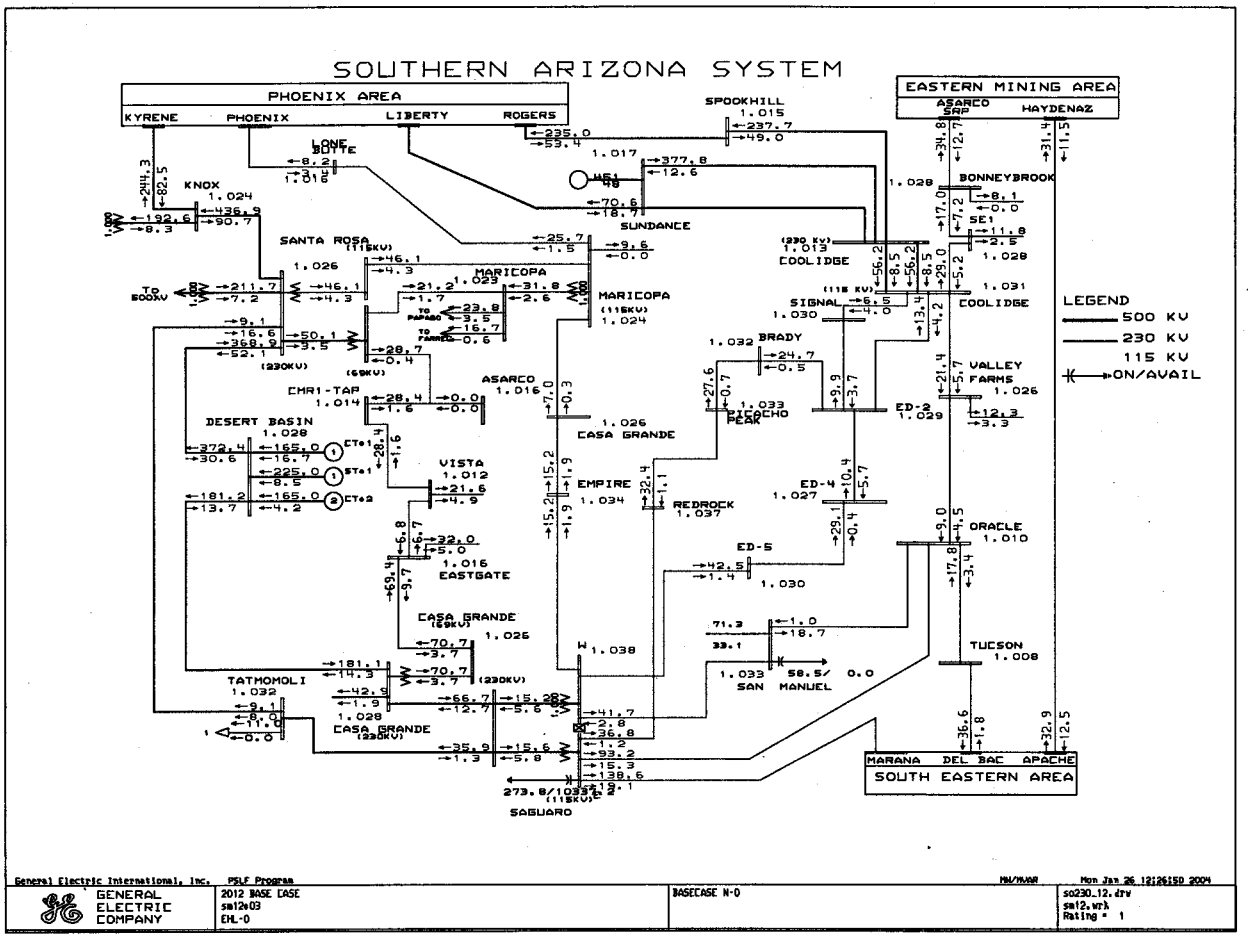
SOUTHERN ARIZONA SYSTEM
PHOENIX AREA
KYRENE
PHOENIX
LIBERTY
ROGERS
EASTERN MINING AREA
ASARCO SAP
HAYDENAZ
SPOOKHILL
1.015
237.7
49.0
235.0
59.4
1.017
377.8
12.6
LONE BUTTE
8.2
3.1
1.016
KNOX
1.024
436.9
90.7
192.6
8.3
244.3
82.5
SUNDANCE
70.6
18.7
BONNEYBROOK
1.028
8.1
0.0
SE1
11.8
2.5
1.028
SANTA ROSA
(115KV)
1.026
46.1
4.3
MARICOPA
1.023
21.2
1.7
31.8
2.6
23.8
3.5
16.7
0.6
MARICOPA
(115KV)
1.024
25.7
1.5
9.6
0.0
(230 KV)
1.013
COOLIDGE
56.2
8.5
29.0
5.2
1.031
COOLIDGE
TO 500KV
211.7
7.2
9.1
16.6
368.9
3.5
52.1
(230KV)
50.1
28.7
0.4
(69KV)
SIGNAL
1.030
6.5
4.0
13.4
4.2
BRADY
1.032
24.7
0.5
VALLEY FARMS
1.026
21.4
5.7
12.3
3.3
ED-9
1.029
CHRI-TAP
1.014
28.4
1.6
0.0
0.0
ASARCO
1.016
7.0
0.3
1.026
CASA GRANDE
27.6
0.7
1.033
PICACHO PEAK
9.9
3.7
DESERT BASIN
1.028
372.4
30.6
165.0
16.7
225.0
8.5
165.0
4.2
181.2
13.7
CT#1
CT#1
CT#2
28.7
1.6
VISTA
1.012
21.6
4.9
15.2
1.9
15.2
1.9
EMPIRE
1.034
32.4
1.1
REDROCK
1.037
ED-4
1.027
10.4
5.7
29.1
0.4
6.8
6.7
32.0
5.0
1.016
EASTGATE
69.4
9.7
ED-5
42.5
1.4
1.030
9.0
4.5
ORACLE
1.010
17.8
3.4
CASA GRANDE
(69KV)
1.025
70.7
3.7
1.038
71.3
33.1
1.0
18.7
1.033
SAN MANUEL
58.5/
0.0
TUCSON
1.008
181.1
14.3
70.7
3.7
(230KV)
TATMOMOLI
1.032
9.1
8.0
11.0
0.0
42.9
1.9
1.028
CASA GRANDE
(230KV)
66.7
12.7
15.2
5.6
41.7
2.8
36.8
1.2
93.2
15.3
138.6
19.1
35.9
1.3
15.6
5.8
273.8/1033.2
(115KV)
SAGUARO
36.6
1.8
32.9
12.5
MARANA
DEL BAC
APACHE
SOUTH EASTERN AREA
LEGEND
500 KV
230 KV
115 KV
ON/AVAIL
General Electric International, Inc.
PSLF Program
MW/MVAR
Mon Jan 26 12:26:15 2004
GENERAL ELECTRIC COMPANY
2012 BASE CASE
sa12a03
EHL-0
BASECASE N-0
so230.12.drw
sa12.wrk
Rating = 1

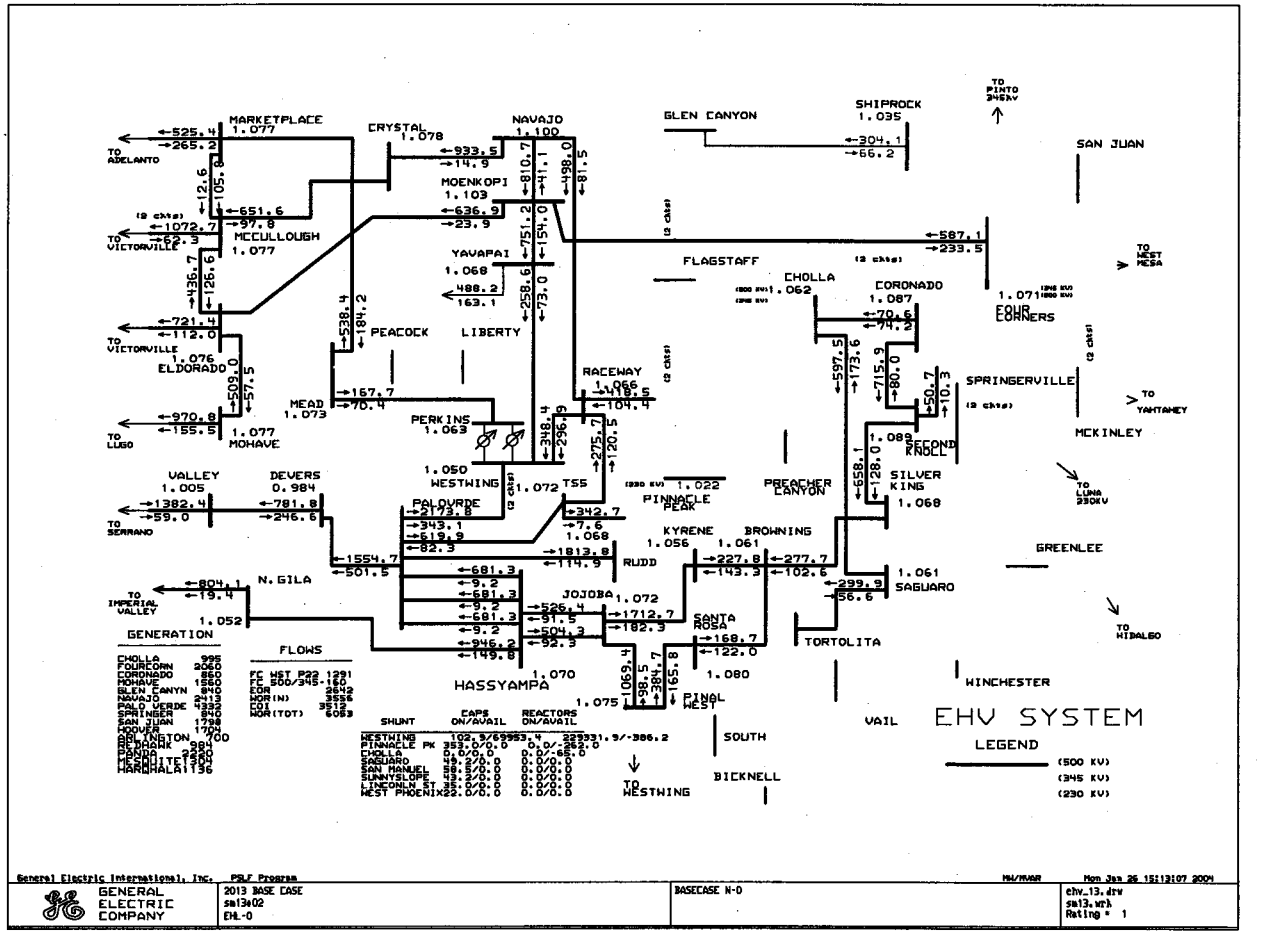
EHV SYSTEM
LEGEND
(500 KV)
(345 KV)
(230 KV)
MARKETPLACE 1.077
CRYSTAL 1.078
NAVAJO 1.100
GLEN CANYON
SHIPROCK 1.035
SAN JUAN
MOENKOPI 1.103
MCCULLOUGH 1.077
YAVAPAI 1.068
FLAGSTAFF
CHOLLA 1.062
CORONADO 1.087
FOUR CORNERS
PEACOCK
LIBERTY
RACEWAY 1.066
SPRINGERVILLE
MCKINLEY
ELDORADO 1.076
MEAD 1.073
PERKINS 1.063
MOHAVE 1.077
WESTWING 1.050
TSS 1.072
PINNACLE PEAK 1.022
PREACHER CANYON
SECOND KNOLL 1.089
SILVER KING 1.068
VALLEY 1.005
DEVERS 0.984
PALOVRDE
KYRENE 1.056
BROWNING 1.061
RUDD
GREENLEE
N. GILA 1.052
JOJOBA 1.072
SAGUARO 1.061
SANTA ROSA
TORTOLITA
HASSYAMPA 1.070
PINAL WEST 1.075
WINCHESTER
VAIL
SOUTH
BICKNELL
TO WESTWING
TO ADELANTO
TO VICTORVILLE
TO LUGO
TO SERRANO
TO IMPERIAL VALLEY
TO PINTO 345KV
TO WEST MESA
TO YAMTAMEY
TO LUNA 230KV
TO HIDALGO
GENERATION
CHOLLA 995
FOURCORN 2060
CORONADO 860
MOHAVE 1560
GLEN CANYN 840
NAVAJO 2413
PALO VERDE 4332
SPRINGER 840
SAN JUAN 1798
HOOVER 1704
ARLINGTON 700
REDHAWK 984
PANDA 2220
MESQUITE 1304
HARQHALA 1136
FLOWS
FC WST P22 1291
FC 500/345-160
EOR 2642
WOR(N) 3556
COI 3512
WOR(TOT) 6053
SHUNT CAPS ON/AVAIL REACTORS ON/AVAIL
WESTWING 102.9/69953.4 229331.9/-386.2
PINNACLE PK 353.0/0.0 0.0/-262.0
CHOLLA 0.0/0.0 0.0/-65.0
SAGUARO 49.2/0.0 0.0/0.0
SAN MANUEL 58.5/0.0 0.0/0.0
SUNNYSLOPE 43.2/0.0 0.0/0.0
LINCONLN ST 35.0/0.0 0.0/0.0
WEST PHOENIX 22.0/0.0 0.0/0.0
General Electric International, Inc. PSLF Program
MW/MVAR
Mon Jan 26 15:13:07 2004
GENERAL ELECTRIC COMPANY
2013 BASE CASE
sm13e02
EHL-0
BASECASE N-0
ehv_13.drw
sm13.wrk
Rating = 1

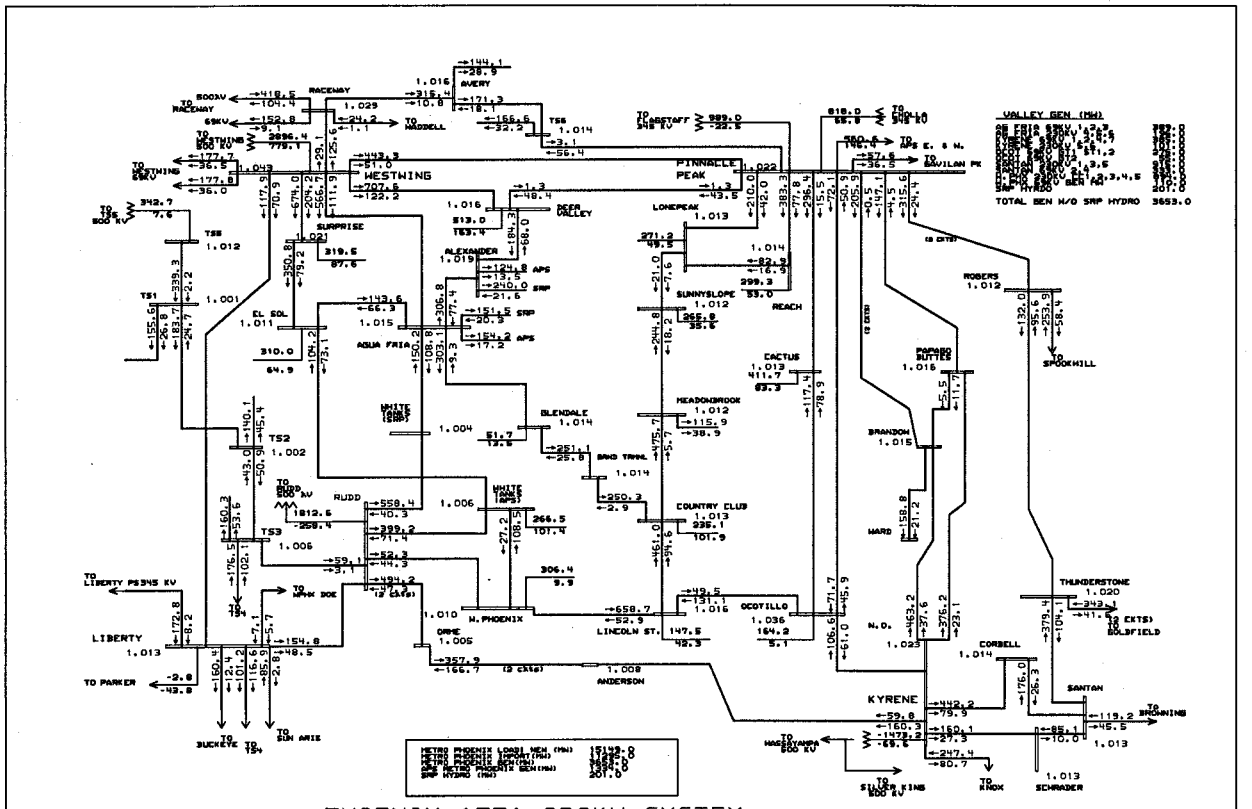

General Electric International, Inc. PSLF Program MW/MVAR Mon Jan 26 15:13:04 2004

GENERAL ELECTRIC COMPANY	2013 BASE CASE sm13e02 EHL-0	BASECASE N-0	aet230_12.drw sm13.wrk Rating = 1

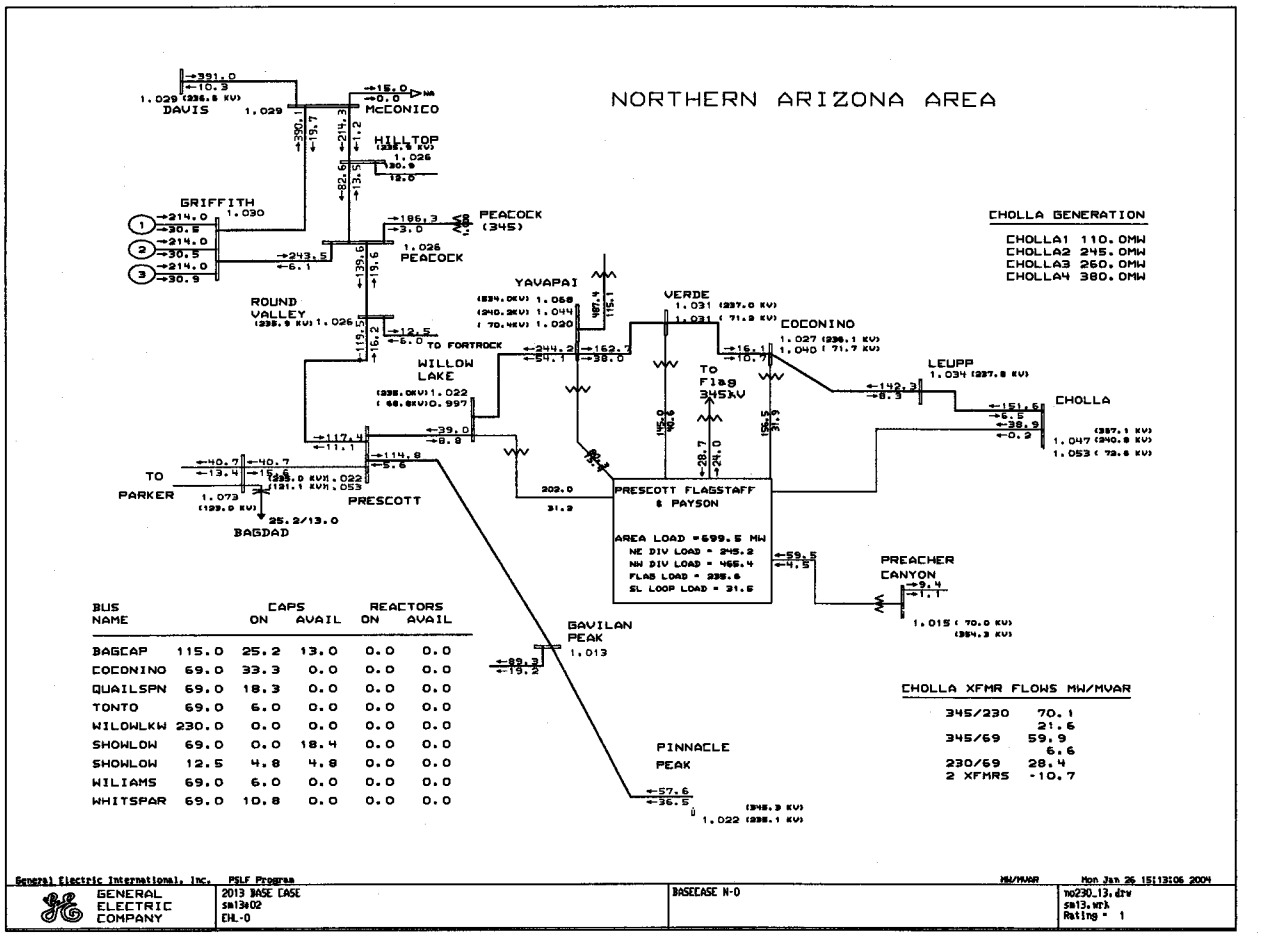

BUS NAME		CAPS ON	CAPS AVAIL	REACTORS ON	REACTORS AVAIL
BAGCAP	115.0	25.2	13.0	0.0	0.0
COCONINO	69.0	33.3	0.0	0.0	0.0
QUAILSPN	69.0	18.3	0.0	0.0	0.0
TONTO	69.0	6.0	0.0	0.0	0.0
WILOWLKW	230.0	0.0	0.0	0.0	0.0
SHOWLOW	69.0	0.0	18.4	0.0	0.0
SHOWLOW	12.5	4.8	4.8	0.0	0.0
WILIAMS	69.0	6.0	0.0	0.0	0.0
WHITSPAR	69.0	10.8	0.0	0.0	0.0

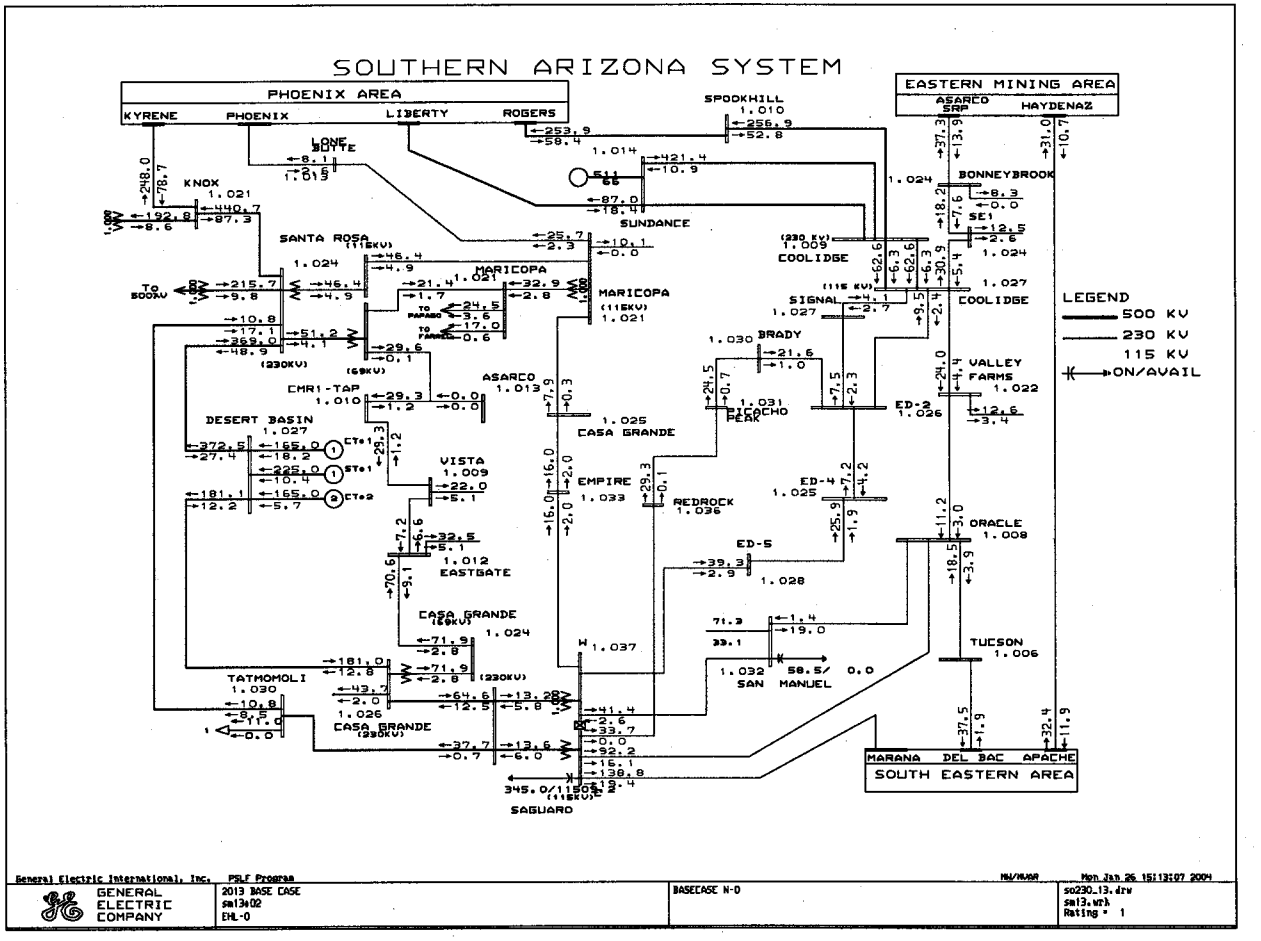
SOUTHERN ARIZONA SYSTEM
PHOENIX AREA
KYRENE
PHOENIX
LIBERTY
ROGERS
EASTERN MINING AREA
ASARCO SRP
HAYDENAZ
SPOOKHILL
LONE BUTTE
KNOX
SUNDANCE
BONNEYBROOK
SE1
SANTA ROSA
MARICOPA
COOLIDGE
SIGNAL
BRADY
VALLEY FARMS
CMR1-TAP
ASARCO
DESERT BASIN
CASA GRANDE
PICACHO PEAK
ED-2
VISTA
EMPIRE
REDROCK
ED-4
ORACLE
EASTGATE
ED-5
CASA GRANDE
TUCSON
TATMOMOLI
SAN MANUEL
SAGUARO
MARANA
DEL BAC
APACHE
SOUTH EASTERN AREA
LEGEND
500 KV
230 KV
115 KV
ON/AVAIL
General Electric International, Inc.
PSLF Program
Mon Jan 26 15:13:07 2004
GENERAL ELECTRIC COMPANY
2013 BASE CASE
sm13a02
EHL-0
BASECASE N-0
so230_13.drw
sm13.wrk
Rating = 1

APPENDIX B

2006
Stability Plots

Table of Contents

Simulation **Page**

Browning 500kv
- Browning-Kyrene outage B1

Cholla 500 & 345kv
- Cholla-Coronado outage B2
- Cholla-Four Corners outage B3
- Cholla-Pinnacle Peak outage B4
- Cholla-Saguaro outage B5

Four Corners 500kv
- Four Corners-Moenkopi outage B6

Jojoba 500kv
- Jojoba-Hassayampa outage B7
- Jojoba-Kyrene outage B8

Kyrene 500kv
- Kyrene-Jojoba outage B9

Moenkopi 500kv
- Moenkopi-Eldorado outage B10
- Moenkopi-Yavapai outage B11

North Gila 500kv
- North Gila-Hassayampa outage B12
- North Gila-Imperial Valley outage B13

Navajo 500kv
- Navajo-Crystal outage B14
- Navajo-Moenkopi outage B15
- Navajo-Westwing outage B16

Perkins 500kv
- Perkins-Mead outage B17

Palo Verde 500kv
- Palo Verde-Devers outage B18
- Palo Verde-Jojoba outage B19
- Palo Verde-North Gila outage B20
- Palo Verde-Rudd outage B21
- Palo Verde-Westwing outage B22

Pinnacle Peak 345kv
- Pinnacle Peak-Cholla outage B23

Rudd 500kv
- Rudd-Palo Verde outage B24

Saguaro 500kv
- Saguaro-Cholla outage B25

Westwing 500kv
- Westwing-Navajo outage B26
- Westwing-Palo Verde outage B27
- Westwing-Yavapai outage B28

Yavapai 500kv
- Yavapai-Moenkopi outage B29
- Yavapai-Westwing outage B30

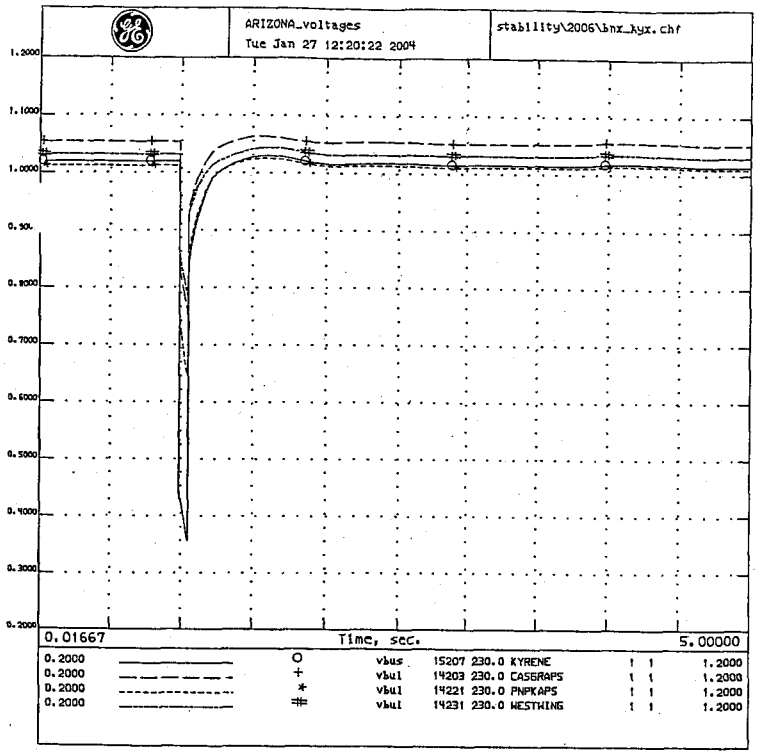

KYRENE FLT KYR-BRWN LINE OUT
2006 HS3-SA APPROVED BASE CASE
OCTOBER 28, 2003
BRWN-KYR STAB #1; 01/03; T=0 3P FLT KYR500;
4C CLR FLT W/BRWN-KYR;2006.dyd;WSCC.bpt

ALL COMMENTS FROM THE TSS REVIEW ARE ADDED.
MOST RECENT VERSION OF THE MDF USED.

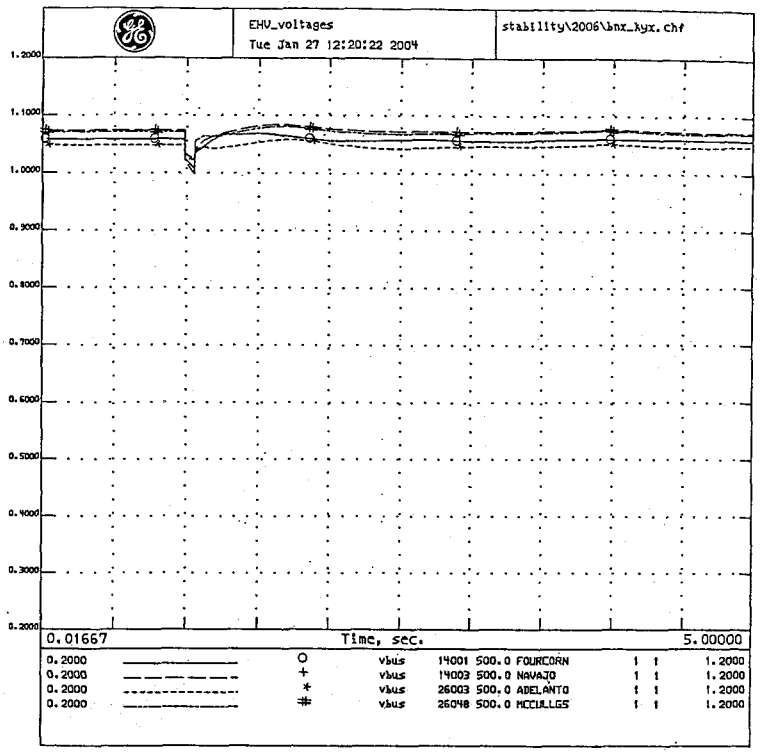

KYRENE FLT KYR-BRWN LINE OUT
2006 HS3-SA APPROVED BASE CASE
OCTOBER 28, 2003
BRWN-KYR STAB #1; 01/03; T=0 3P FLT KYR500;
4C CLR FLT W/BRWN-KYR;2006.dyd;WSCC.bpt

ALL COMMENTS FROM THE TSS REVIEW ARE ADDED.
MOST RECENT VERSION OF THE MDF USED.

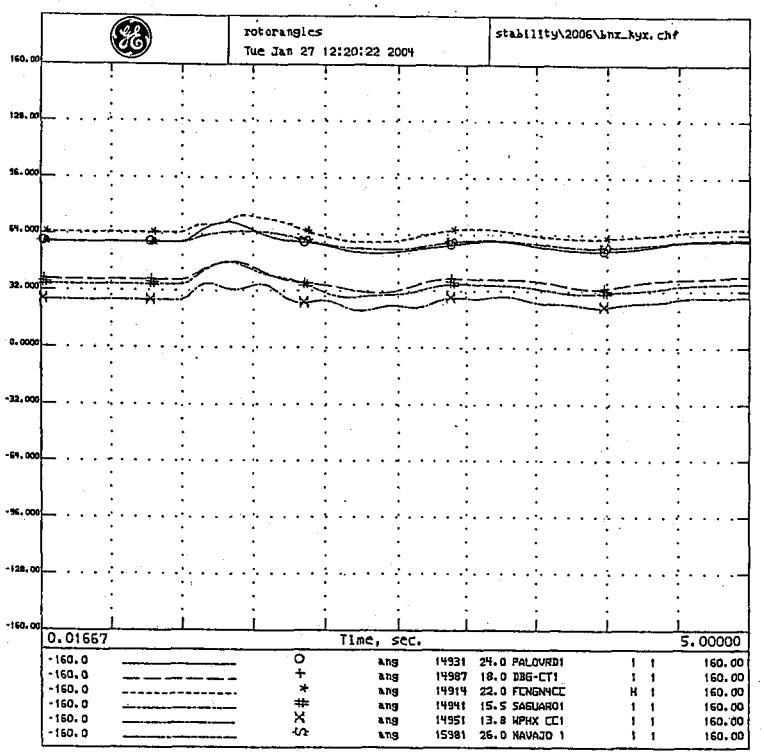

KYRENE FLT KYR-BRWN LINE OUT
HS3-SA APPROVED BASE CASE
R 28, 2003
KYR STAB #1; 01/03; T=0 3P FLT KYR500;
4C CLR FLT W/BRWN-KYR;2006.dyd;WSCC.bpt

ALL COMMENTS FROM THE TSS REVIEW ARE ADDED.
MOST RECENT VERSION OF THE MDF USED.

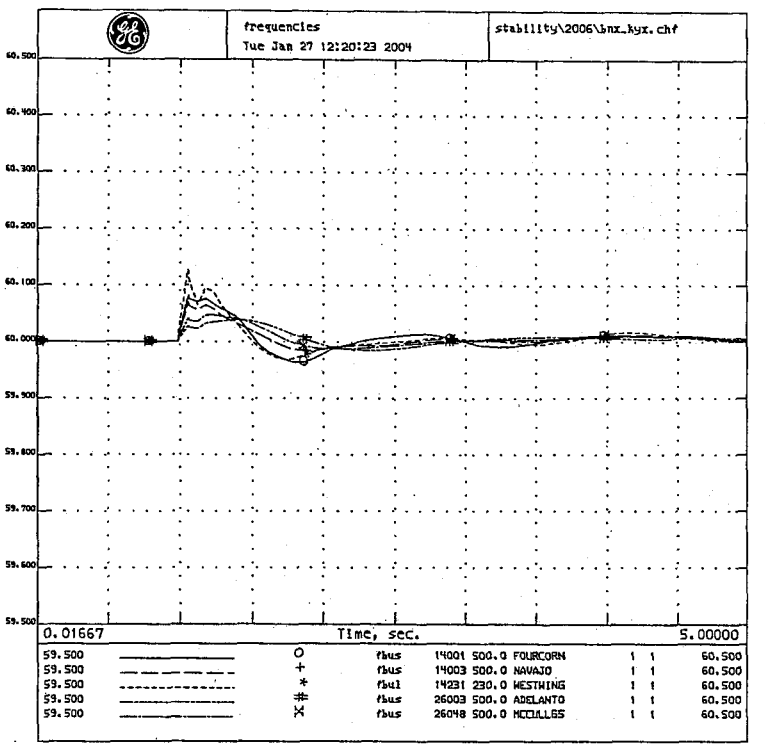

KYRENE FLT KYR-BRWN LINE OUT
2006 HS3-SA APPROVED BASE CASE
OCTOBER 28, 2003
BRWN-KYR STAB #1; 01/03; T=0 3P FLT KYR500;
4C CLR FLT W/BRWN-KYR;2006.dyd;WSCC.bpt

ALL COMMENTS FROM THE TSS REVIEW ARE ADDED.
MOST RECENT VERSION OF THE MDF USED.

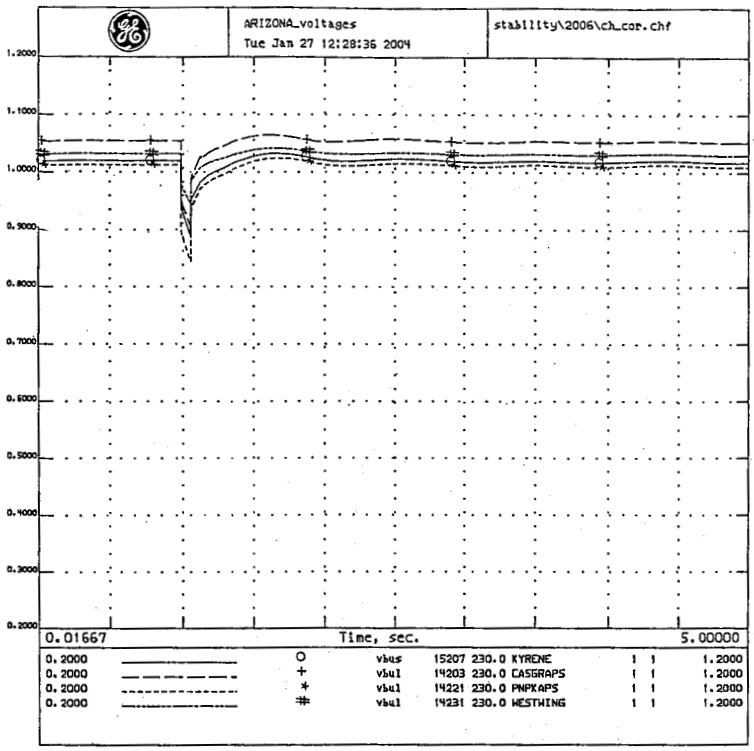

CHOLLA 500KV FLT CH-COR LINE OUT
2006 HS3-SA APPROVED BASE CASE
OCTOBER 28, 2003
CHO-COR STAB; 1/03; T=0 3P FLT CHO500;4C CLR FLT
W/CHO-COR;2006.dyd;WSCC.bpt

ALL COMMENTS FROM THE TSS REVIEW ARE ADDED.
MOST RECENT VERSION OF THE MDF USED.

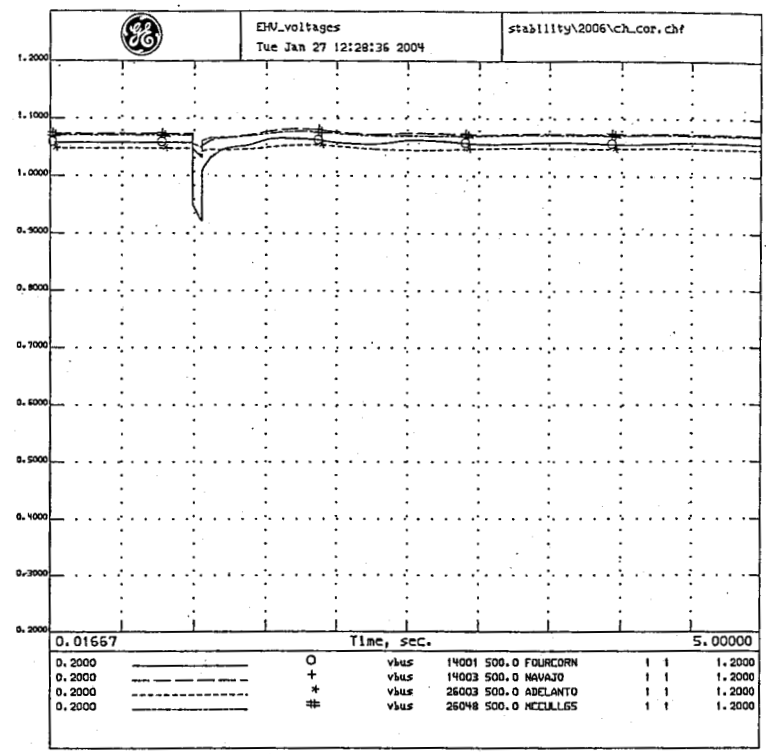

CHOLLA 500KV FLT CH-COR LINE OUT
2006 HS3-SA APPROVED BASE CASE
OCTOBER 28, 2003
CHO-COR STAB; 1/03; T=0 3P FLT CHO500;4C CLR FLT
W/CHO-COR;2006.dyd;WSCC.bpt

ALL COMMENTS FROM THE TSS REVIEW ARE ADDED.
MOST RECENT VERSION OF THE MDF USED.

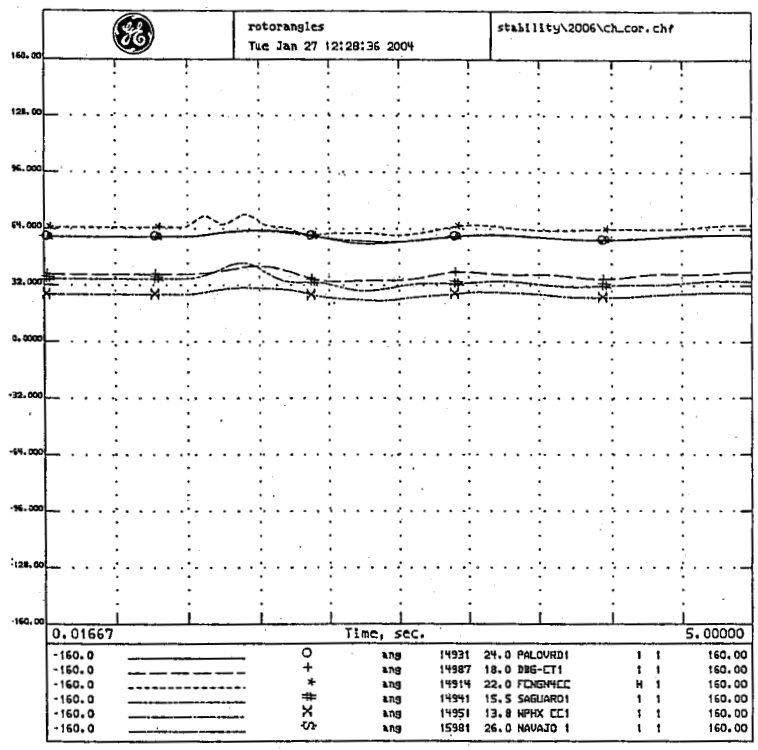

CHOLLA 500KV FLT CH-COR LINE OUT
2006 HS3-SA APPROVED BASE CASE
OCTOBER 28, 2003
CHO-COR STAB; 1/03; T=0 3P FLT CHO500;4C CLR FLT
W/CHO-COR;2006.dyd;WSCC.bpt

ALL COMMENTS FROM THE TSS REVIEW ARE ADDED.
MOST RECENT VERSION OF THE MDF USED.

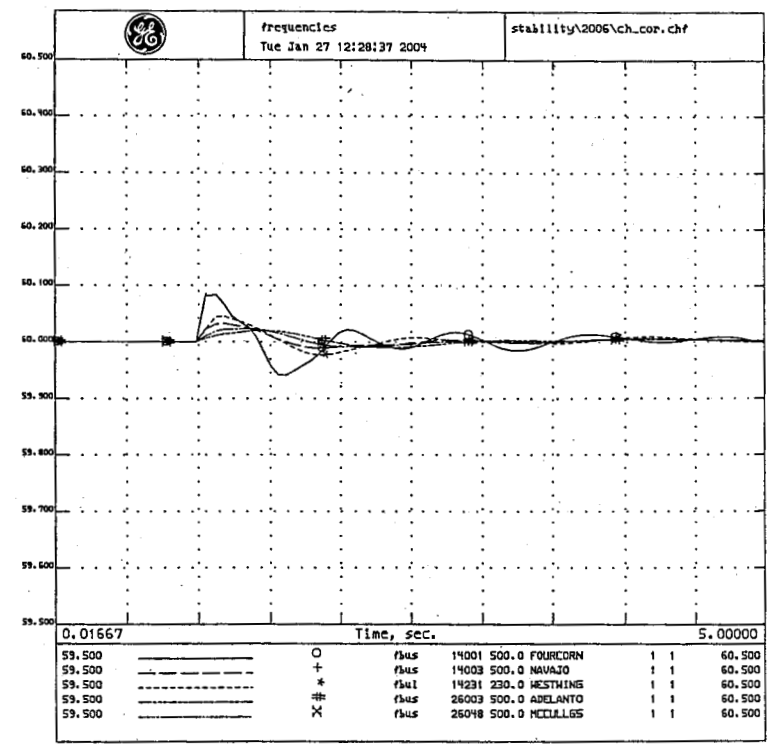

CHOLLA 500KV FLT CH-COR LINE OUT
2006 HS3-SA APPROVED BASE CASE
OCTOBER 28, 2003
CHO-COR STAB; 1/03; T=0 3P FLT CHO500;4C CLR FLT
W/CHO-COR;2006.dyd;WSCC.bpt

ALL COMMENTS FROM THE TSS REVIEW ARE ADDED.
MOST RECENT VERSION OF THE MDF USED.

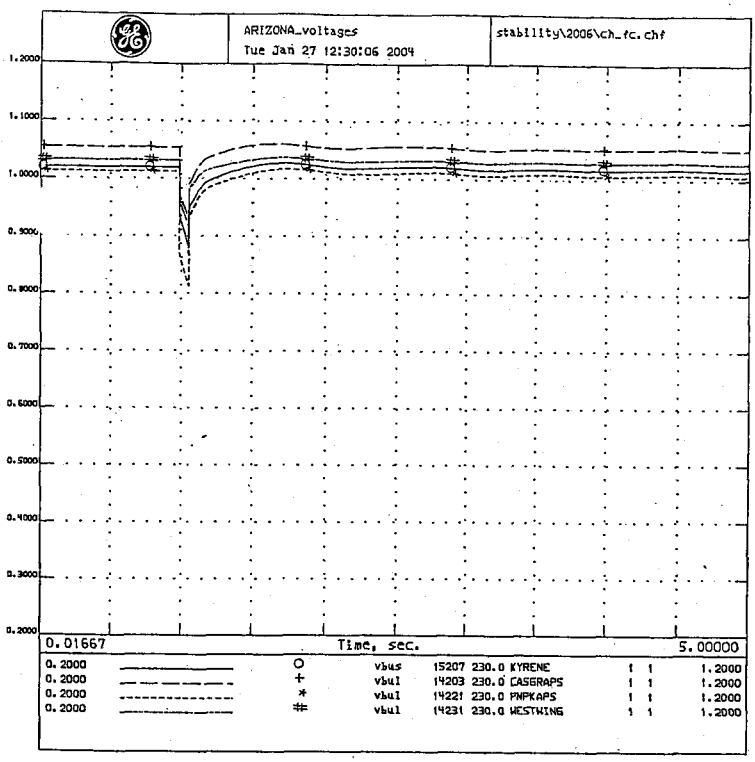

CHOLLA FLT CH-FC LINE OUT!
2006 HS3-SA APPROVED BASE CASE
OCTOBER 28, 2003
CHO-FC #1 STAB; 01/03; T=0 3P FLT CHO345;FLSH FCN-CHO CAPS;
4C CLR FLT W/CHO-FC #1;2006.dyd;WSCC.bpt

ALL COMMENTS FROM THE TSS REVIEW ARE ADDED.
MOST RECENT VERSION OF THE MDF USED.

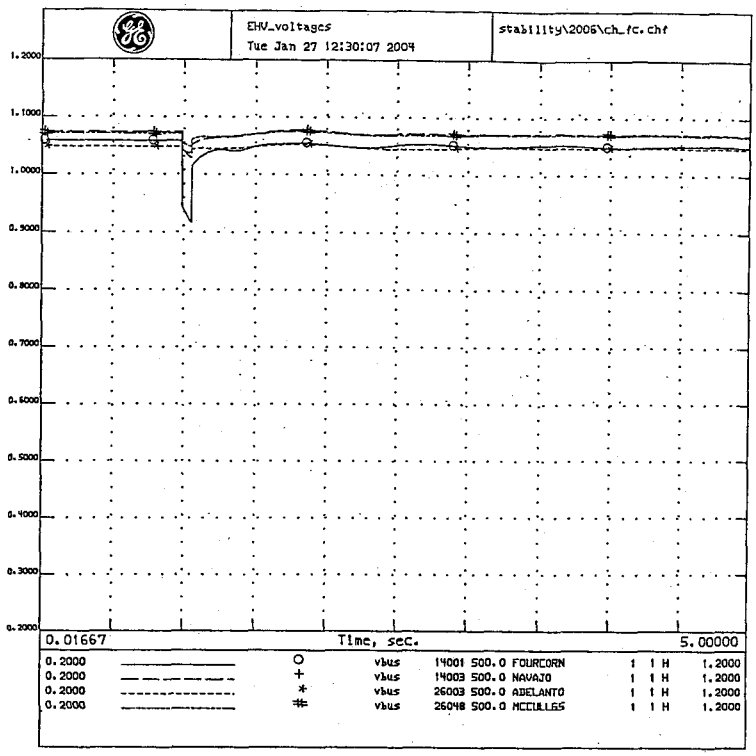

CHOLLA FLT CH-FC LINE OUT!
2006 HS3-SA APPROVED BASE CASE
OCTOBER 28, 2003
CHO-FC #1 STAB; 01/03; T=0 3P FLT CHO345;FLSH FCN-CHO CAPS;
4C CLR FLT W/CHO-FC #1;2006.dyd;WSCC.bpt

ALL COMMENTS FROM THE TSS REVIEW ARE ADDED.
MOST RECENT VERSION OF THE MDF USED.

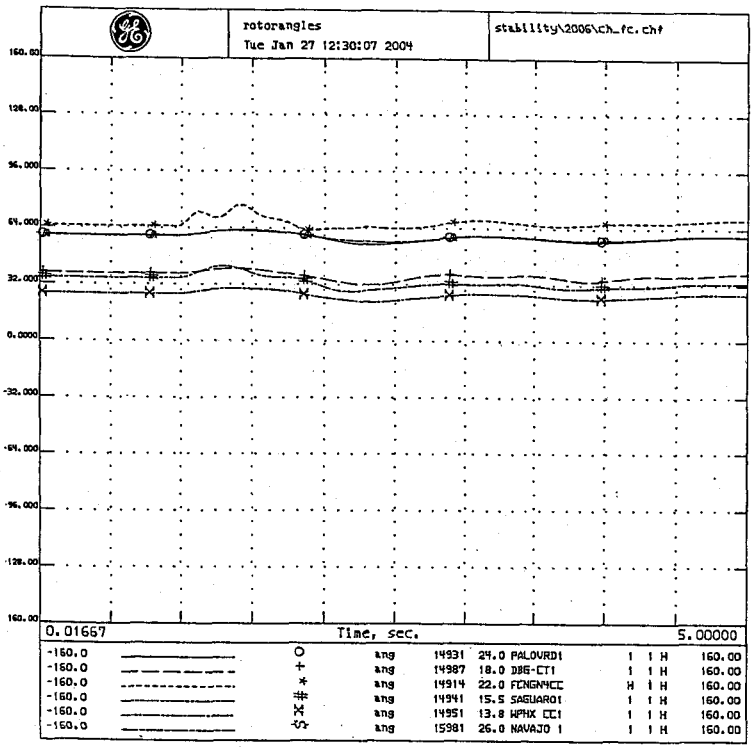

CHOLLA FLT CH-FC LINE OUT!
HS3-SA APPROVED BASE CASE
T 28, 2003
#1 STAB; 01/03; T=0 3P FLT CHO345;FLSH FCN-CHO CAPS;
4C CLR FLT W/CHO-FC #1;2006.dyd;WSCC.bpt

ALL COMMENTS FROM THE TSS REVIEW ARE ADDED.
MOST RECENT VERSION OF THE MDF USED.

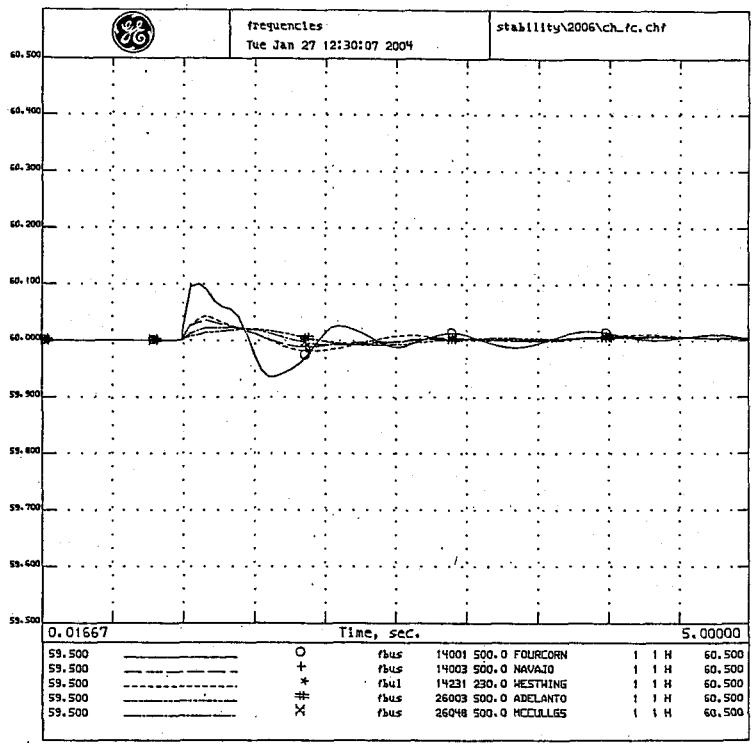

CHOLLA FLT CH-FC LINE OUT!
2006 HS3-SA APPROVED BASE CASE
OCTOBER 28, 2003
CHO-FC #1 STAB; 01/03; T=0 3P FLT CHO345;FLSH FCN-CHO CAPS;
4C CLR FLT W/CHO-FC #1;2006.dyd;WSCC.bpt

ALL COMMENTS FROM THE TSS REVIEW ARE ADDED.
MOST RECENT VERSION OF THE MDF USED.

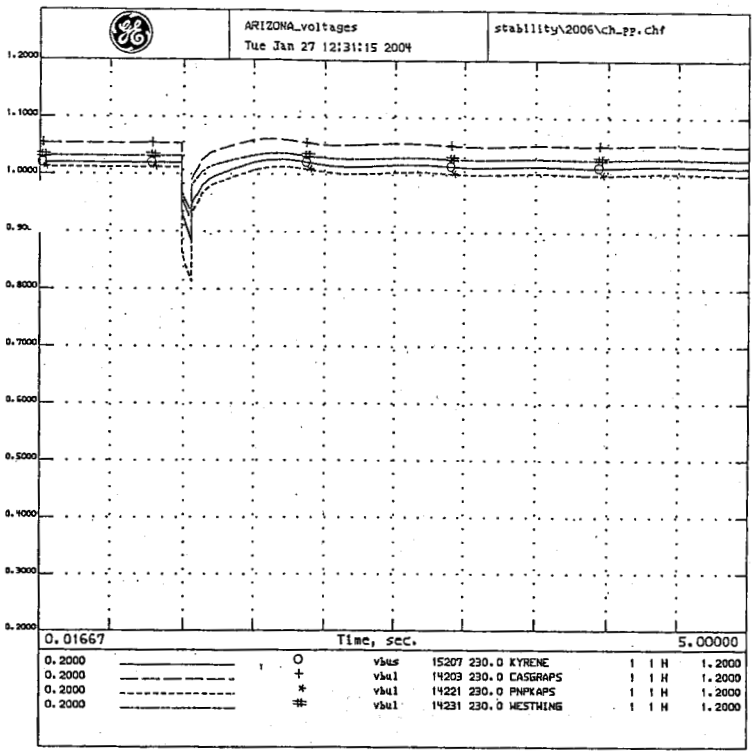

CHOLLA FLT CH-PPK LINE OUT!
2006 HS3-SA APPROVED BASE CASE
OCTOBER 28, 2003
CHO-PPK #1 STAB; 01/03; T=0 3P FLT CHO345;FLSH FCN-CHO CAPS;
4C CLR FLT W/CHO-PPK #1;8C REIN CAPS;2006.dyd;WSCC.bpt

ALL COMMENTS FROM THE TSS REVIEW ARE ADDED.
MOST RECENT VERSION OF THE MDF USED.

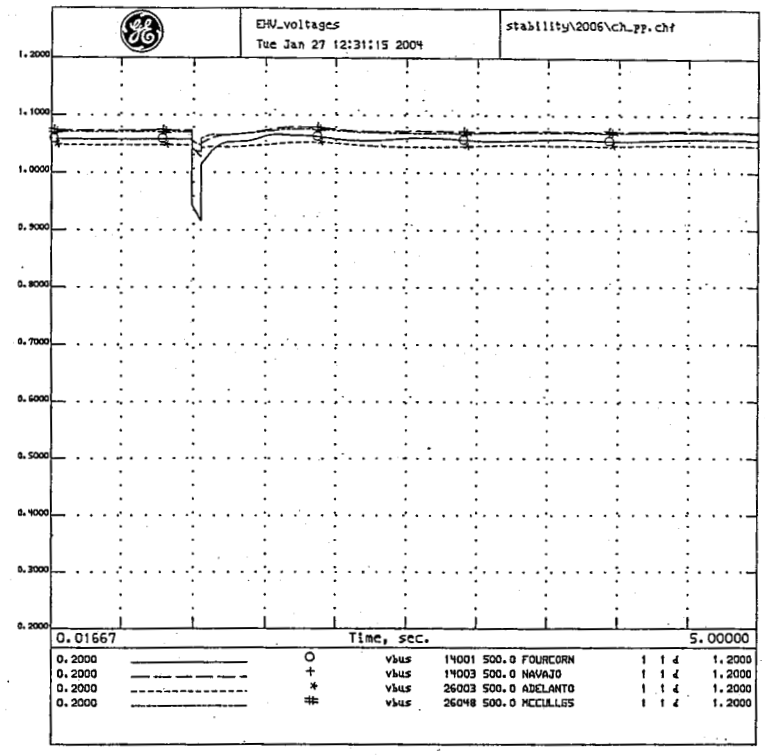

CHOLLA FLT CH-PPK LINE OUT!
2006 HS3-SA APPROVED BASE CASE
OCTOBER 28, 2003
CHO-PPK #1 STAB; 01/03; T=0 3P FLT CHO345;FLSH FCN-CHO CAPS;
4C CLR FLT W/CHO-PPK #1;8C REIN CAPS;2006.dyd;WSCC.bpt

ALL COMMENTS FROM THE TSS REVIEW ARE ADDED.
MOST RECENT VERSION OF THE MDF USED.

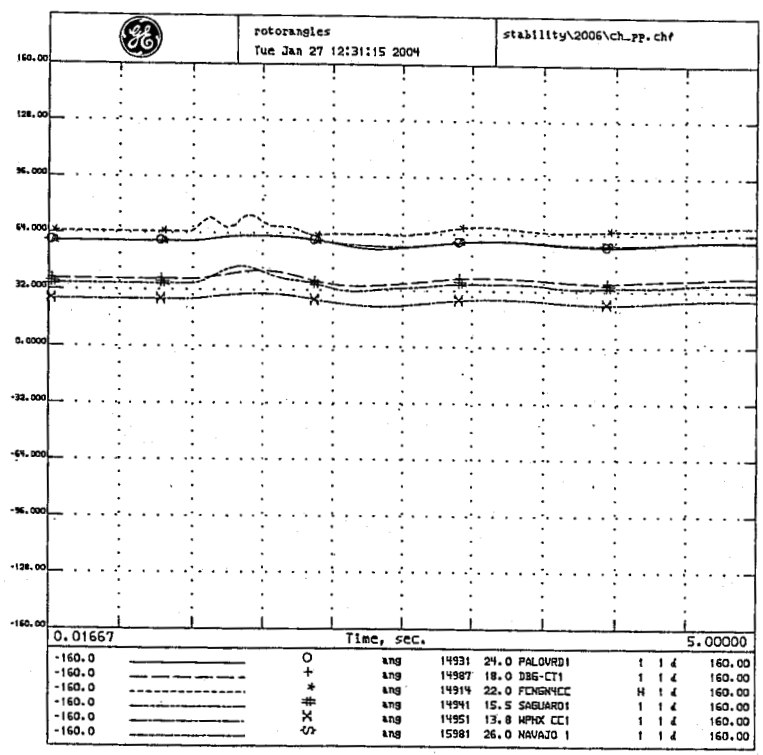

CHOLLA FLT CH-PPK LINE OUT!
HS3-SA APPROVED BASE CASE
R 28, 2003
K #1 STAB; 01/03; T=0 3P FLT CHO345;FLSH FCN-CHO CAPS;
LR FLT W/CHO-PPK #1;8C REIN CAPS;2006.dyd;WSCC.bpt

ALL COMMENTS FROM THE TSS REVIEW ARE ADDED.
MOST RECENT VERSION OF THE MDF USED.

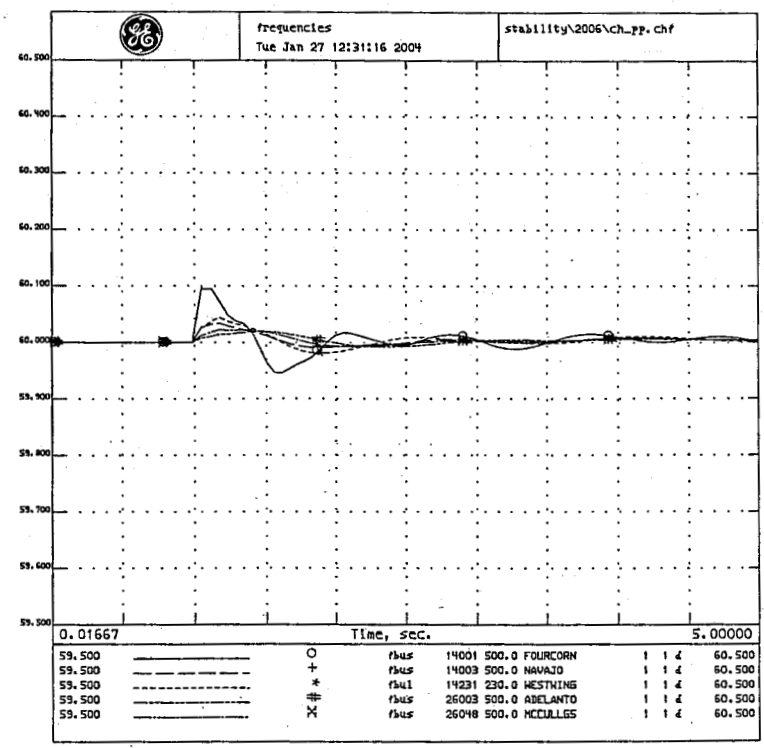

CHOLLA FLT CH-PPK LINE OUT!
2006 HS3-SA APPROVED BASE CASE
OCTOBER 28, 2003
CHO-PPK #1 STAB; 01/03; T=0 3P FLT CHO345;FLSH FCN-CHO CAPS;
4C CLR FLT W/CHO-PPK #1;8C REIN CAPS;2006.dyd;WSCC.bpt

ALL COMMENTS FROM THE TSS REVIEW ARE ADDED.
MOST RECENT VERSION OF THE MDF USED.

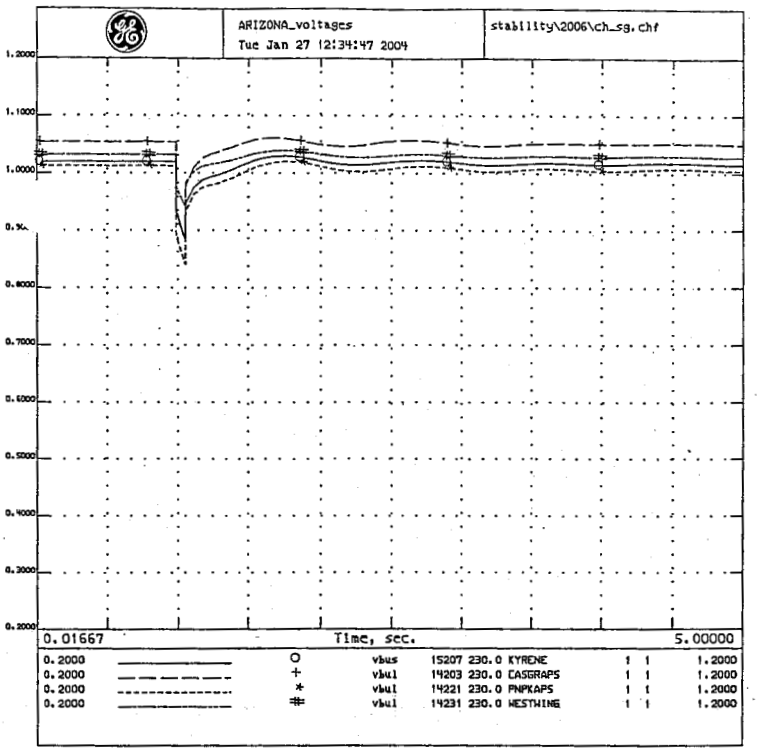

CHOLLA 500KV FLT CH-SAG LINE OUT
2006 HS3-SA APPROVED BASE CASE
OCTOBER 28, 2003
CHO-SAG STAB; 1/03; T=0 3P FLT CHO500;4C CLR FLT
W/CHO-SAG;2006.dyd;HSCC.bpt

ALL COMMENTS FROM THE TSS REVIEW ARE ADDED.
MOST RECENT VERSION OF THE MDF USED.

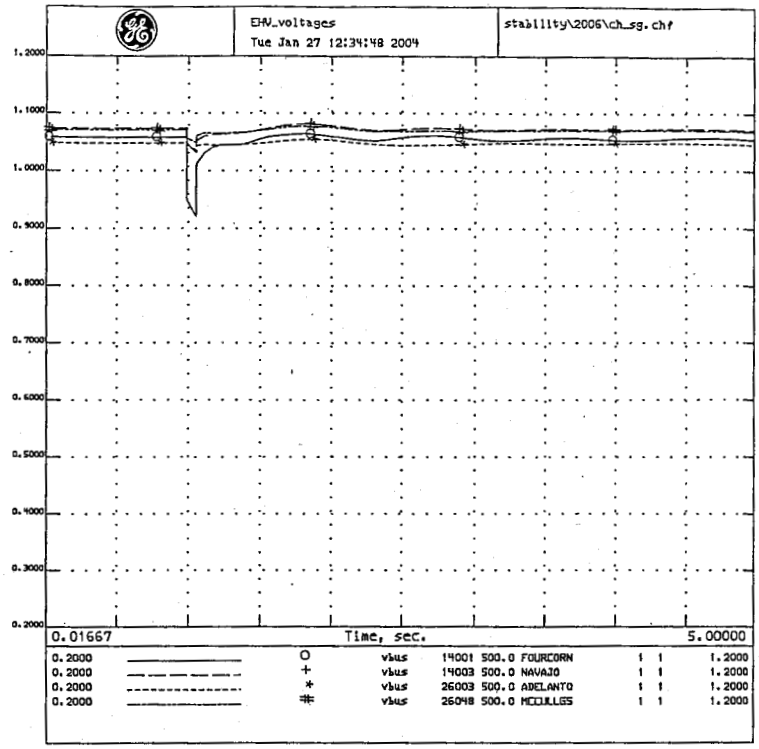

CHOLLA 500KV FLT CH-SAG LINE OUT
2006 HS3-SA APPROVED BASE CASE
OCTOBER 28, 2003
CHO-SAG STAB; 1/03; T=0 3P FLT CHO500;4C CLR FLT
W/CHO-SAG;2006.dyd;HSCC.bpt

ALL COMMENTS FROM THE TSS REVIEW ARE ADDED.
MOST RECENT VERSION OF THE MDF USED.

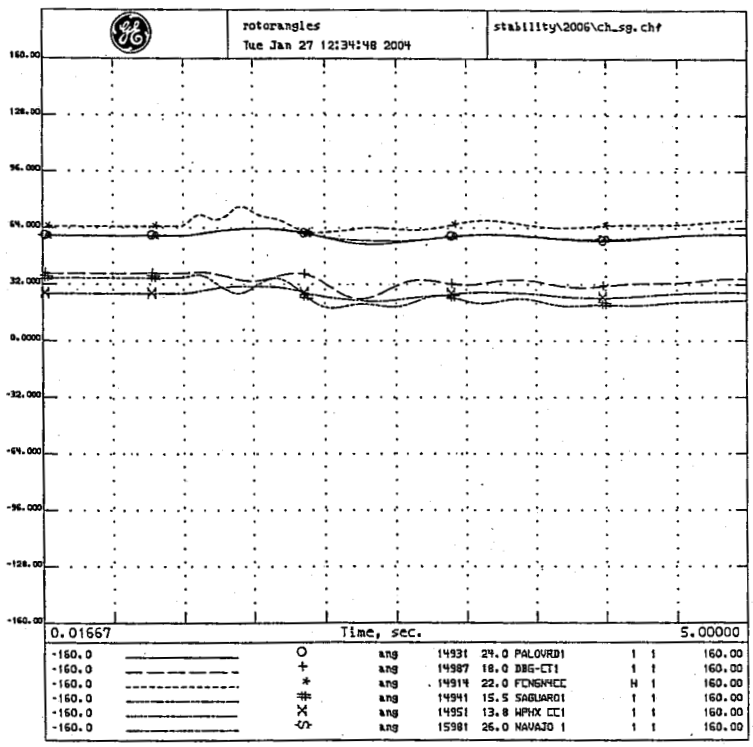

CHOLLA 500KV FLT CH-SAG LINE OUT
2006 HS3-SA APPROVED BASE CASE
OCTOBER 28, 2003
CHO-SAG STAB; 1/03; T=0 3P FLT CHO500;4C CLR FLT
W/CHO-SAG;2006.dyd;HSCC.bpt

ALL COMMENTS FROM THE TSS REVIEW ARE ADDED.
MOST RECENT VERSION OF THE MDF USED.

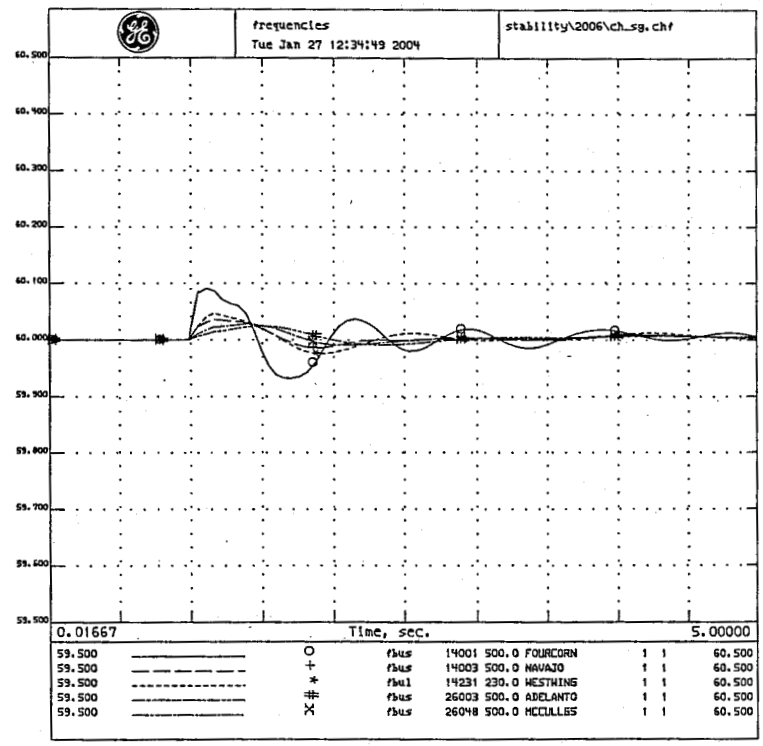

CHOLLA 500KV FLT CH-SAG LINE OUT
2006 HS3-SA APPROVED BASE CASE
OCTOBER 28, 2003
CHO-SAG STAB; 1/03; T=0 3P FLT CHO500;4C CLR FLT
W/CHO-SAG;2006.dyd;HSCC.bpt

ALL COMMENTS FROM THE TSS REVIEW ARE ADDED.
MOST RECENT VERSION OF THE MDF USED.

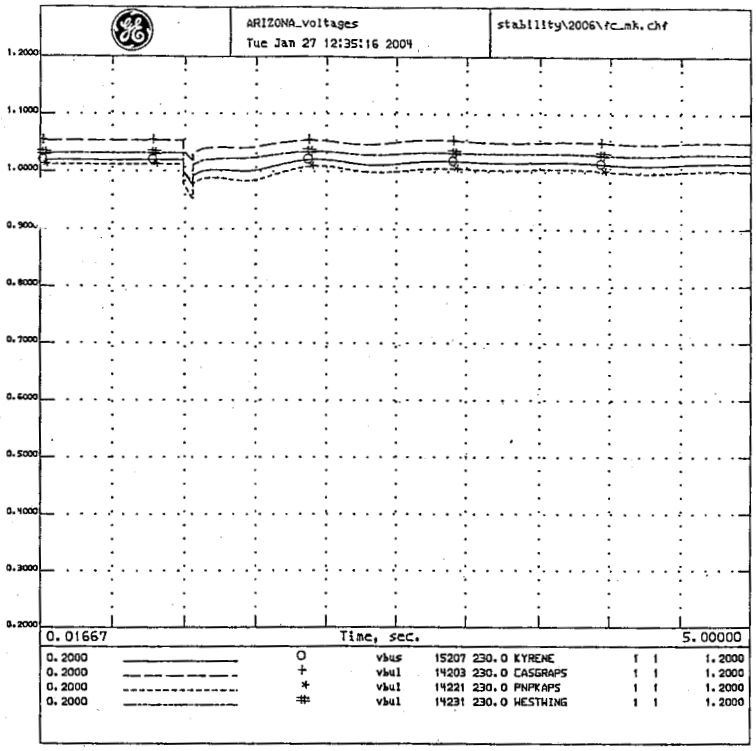

FCN FLT500 FCN-MNK out
2006 HS3-SA APPROVED BASE CASE
OCTOBER 28, 2003
FOURCORN-MOENKOPI STAB; 1/03; T=0 3P FLT FCN500;10% FLT DMPING;FLSH
CAPS FCN-MKP/NAV-MKP;4C CLR FLT W/FCN-MKP;8C REIN CAPS;2006.dyd;HSCC.bpt

ALL COMMENTS FROM THE TSS REVIEW ARE ADDED.
MOST RECENT VERSION OF THE MDF USED.

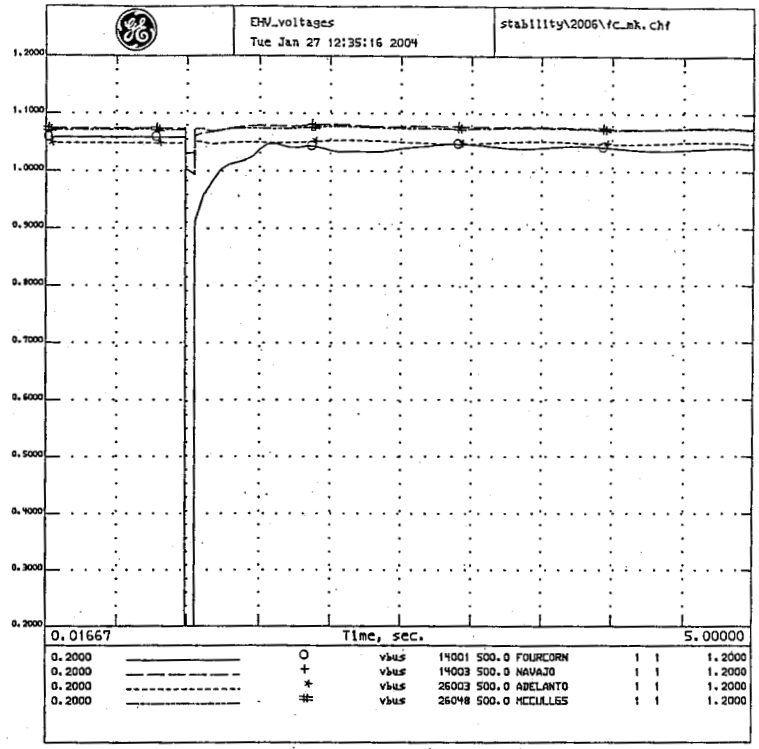

FCN FLT500 FCN-MNK out
2006 HS3-SA APPROVED BASE CASE
OCTOBER 28, 2003
FOURCORN-MOENKOPI STAB; 1/03; T=0 3P FLT FCN500;10% FLT DMPING;FLSH
CAPS FCN-MKP/NAV-MKP;4C CLR FLT W/FCN-MKP;8C REIN CAPS;2006.dyd;HSCC.bpt

ALL COMMENTS FROM THE TSS REVIEW ARE ADDED.
MOST RECENT VERSION OF THE MDF USED.

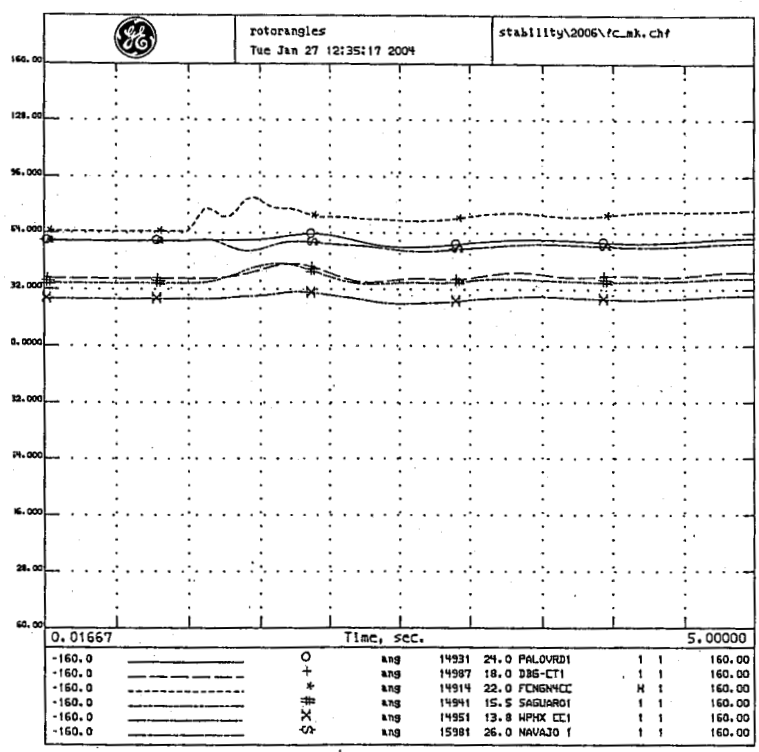

FCN FLT500 FCN-MNK out
2006 HS3-SA APPROVED BASE CASE
OCTOBER 28, 2003
FOURCORN-MOENKOPI STAB; 1/03; T=0 3P FLT FCN500;10% FLT DMPING;FLSH
CAPS FCN-MKP/NAV-MKP;4C CLR FLT W/FCN-MKP;8C REIN CAPS;2006.dyd;HSCC.bpt

ALL COMMENTS FROM THE TSS REVIEW ARE ADDED.
MOST RECENT VERSION OF THE MDF USED.

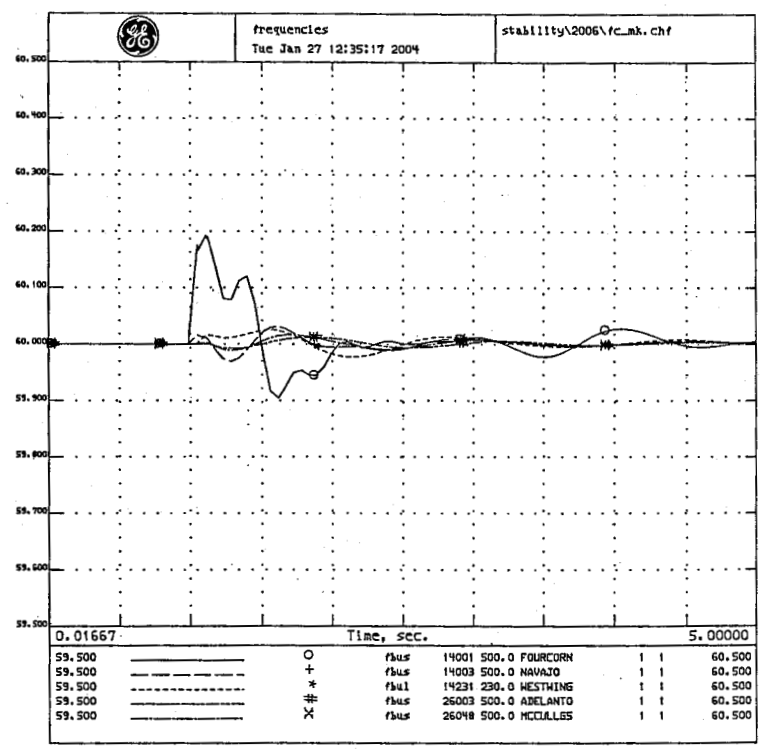

FCN FLT500 FCN-MNK out
2006 HS3-SA APPROVED BASE CASE
OCTOBER 28, 2003
FOURCORN-MOENKOPI STAB; 1/03; T=0 3P FLT FCN500;10% FLT DMPING;FLSH
CAPS FCN-MKP/NAV-MKP;4C CLR FLT W/FCN-MKP;8C REIN CAPS;2006.dyd;HSCC.bpt

ALL COMMENTS FROM THE TSS REVIEW ARE ADDED.
MOST RECENT VERSION OF THE MDF USED.

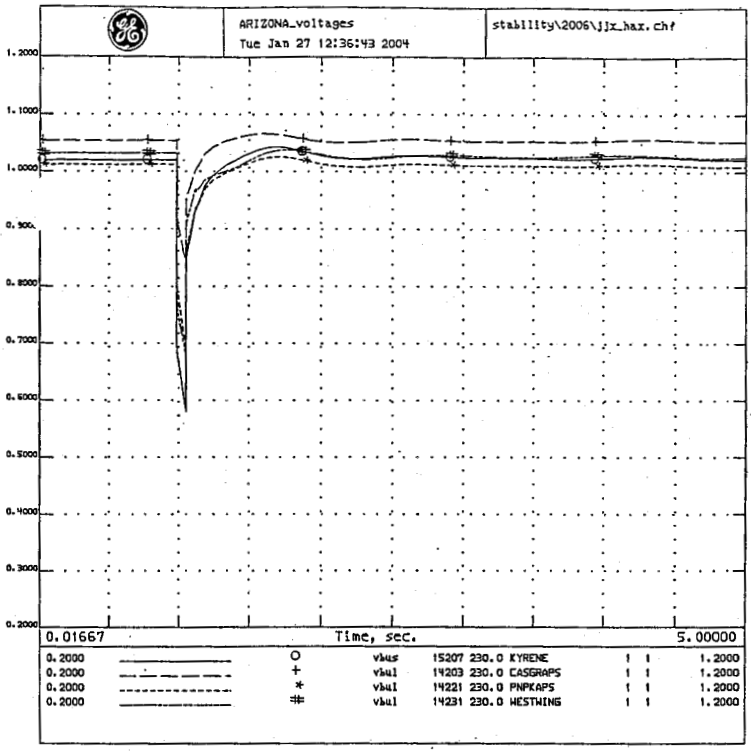

JOJOBA FLT JOJOBA-HASSY LINE OUT
2006 HS3-SA APPROVED BASE CASE
OCTOBER 28, 2003
HAS-JJ STAB #1; 01/03; T=0 3P FLT JJ500;10% FLT DMPING;FLSH CAPS
NAV-MKP/MKP-YAV,PV-DV/NG;4C CLR FLT W/HAS-JJ;8C REIN;2006.dyd;WSCC.bpt

ALL COMMENTS FROM THE TSS REVIEW ARE ADDED.
MOST RECENT VERSION OF THE MDF USED.

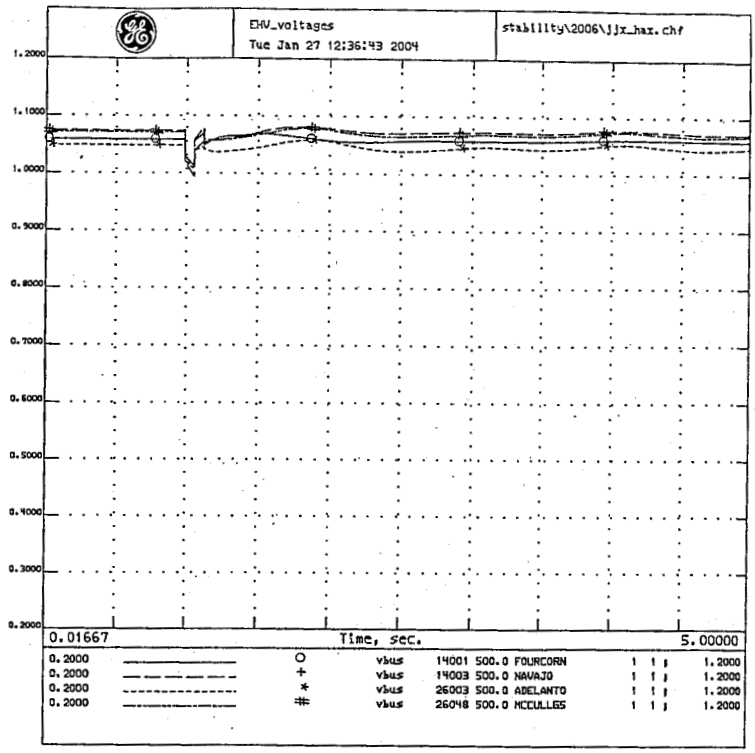

JOJOBA FLT JOJOBA-HASSY LINE OUT
2006 HS3-SA APPROVED BASE CASE
OCTOBER 28, 2003
HAS-JJ STAB #1; 01/03; T=0 3P FLT JJ500;10% FLT DMPING;FLSH CAPS
NAV-MKP/MKP-YAV,PV-DV/NG;4C CLR FLT W/HAS-JJ;8C REIN;2006.dyd;WSCC.bpt

ALL COMMENTS FROM THE TSS REVIEW ARE ADDED.
MOST RECENT VERSION OF THE MDF USED.

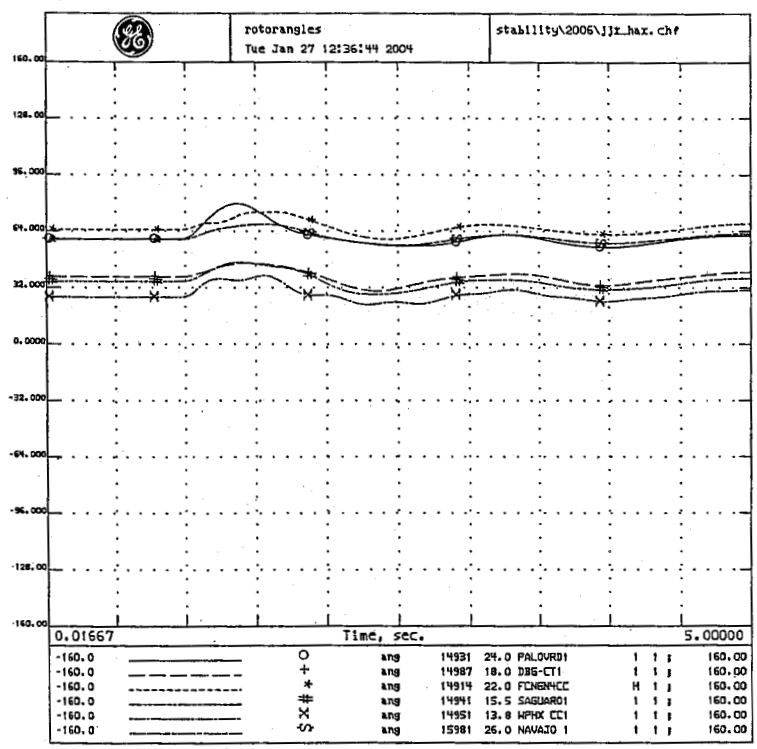

JOJOBA FLT JOJOBA-HASSY LINE OUT
2006 HS3-SA APPROVED BASE CASE
OCTOBER 28, 2003
HAS-JJ STAB #1; 01/03; T=0 3P FLT JJ500;10% FLT DMPING;FLSH CAPS
NAV-MKP/MKP-YAV,PV-DV/NG;4C CLR FLT W/HAS-JJ;8C REIN;2006.dyd;WSCC.bpt

ALL COMMENTS FROM THE TSS REVIEW ARE ADDED.
MOST RECENT VERSION OF THE MDF USED.

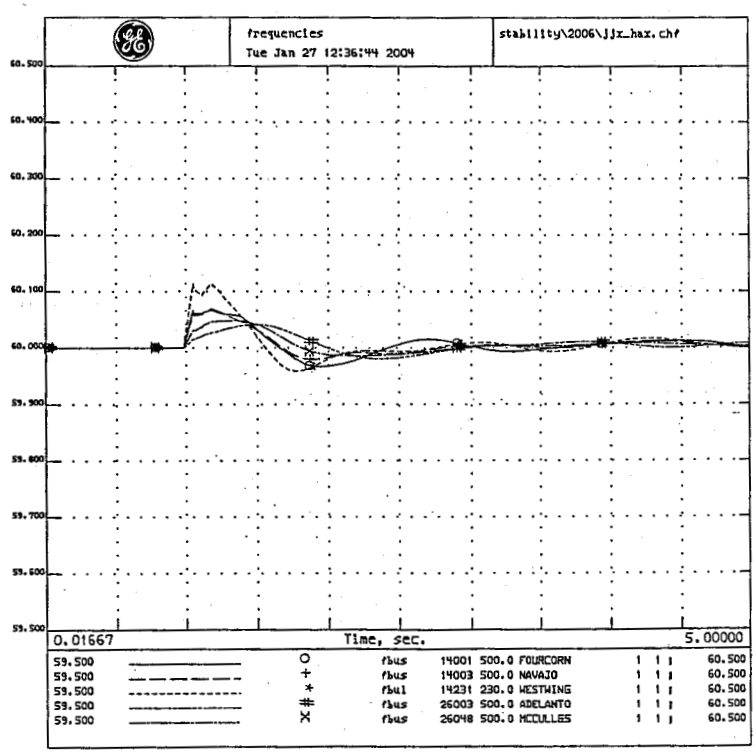

JOJOBA FLT JOJOBA-HASSY LINE OUT
2006 HS3-SA APPROVED BASE CASE
OCTOBER 28, 2003
HAS-JJ STAB #1; 01/03; T=0 3P FLT JJ500;10% FLT DMPING;FLSH CAPS
NAV-MKP/MKP-YAV,PV-DV/NG;4C CLR FLT W/HAS-JJ;8C REIN;2006.dyd;WSCC.bpt

ALL COMMENTS FROM THE TSS REVIEW ARE ADDED.
MOST RECENT VERSION OF THE MDF USED.

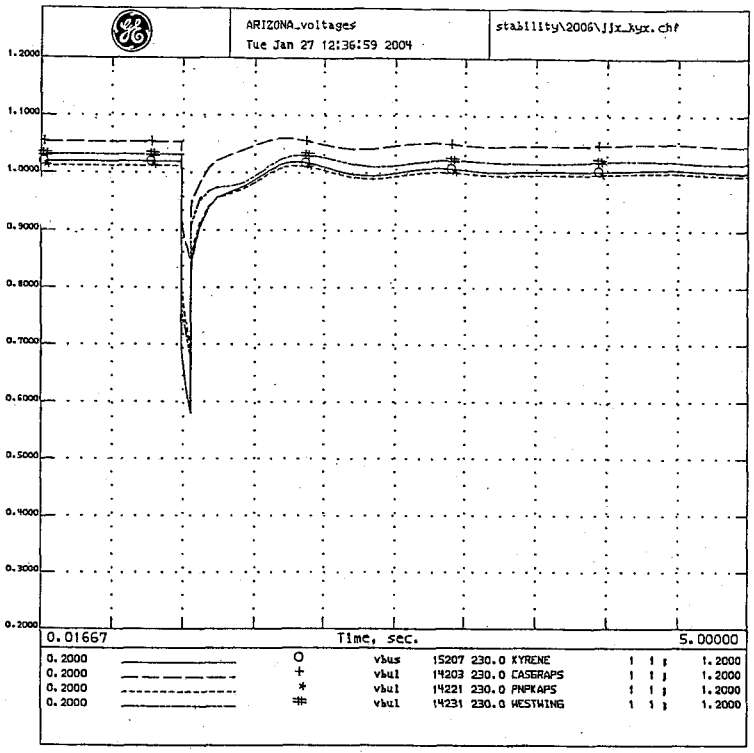

JOJOBA FLT JOJOBA-KYR LINE OUT
2006 HS3-SA APPROVED BASE CASE
OCTOBER 28, 2003
JJ-KYR STAB #1; 01/03; T=0 3P FLT JJ500;10% FLT DMPING;FLSH CAPS
NAV-MKP/MKP-YAV,PV-DV/NG;4C CLR FLT W/JJ-KYR;8C REIN;2006.dyd;WSCC.bpt

ALL COMMENTS FROM THE TSS REVIEW ARE ADDED.
MOST RECENT VERSION OF THE MDF USED.

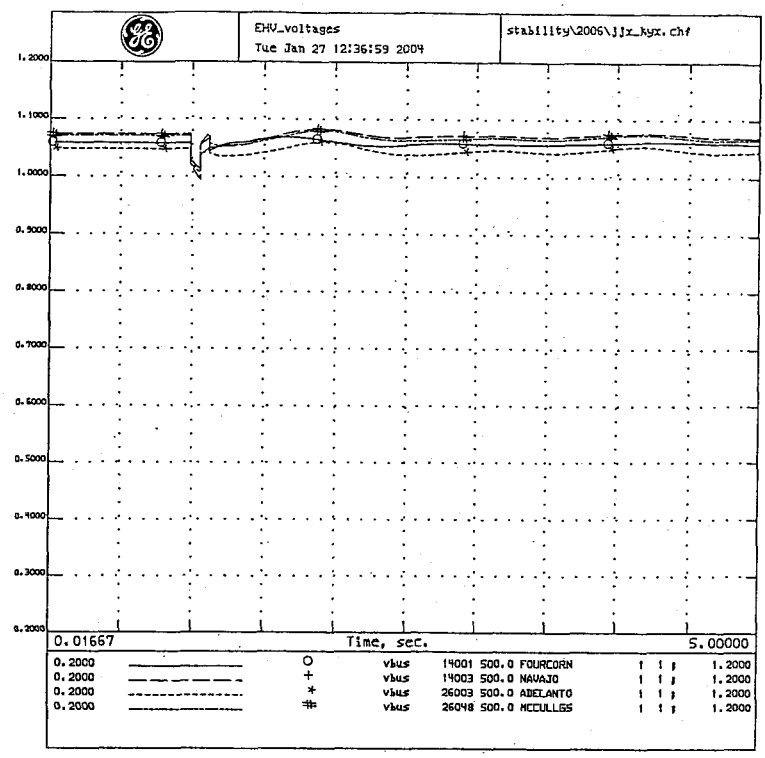

JOJOBA FLT JOJOBA-KYR LINE OUT
2006 HS3-SA APPROVED BASE CASE
OCTOBER 28, 2003
JJ-KYR STAB #1; 01/03; T=0 3P FLT JJ500;10% FLT DMPING;FLSH CAPS
NAV-MKP/MKP-YAV,PV-DV/NG;4C CLR FLT W/JJ-KYR;8C REIN;2006.dyd;WSCC.bpt

ALL COMMENTS FROM THE TSS REVIEW ARE ADDED.
MOST RECENT VERSION OF THE MDF USED.

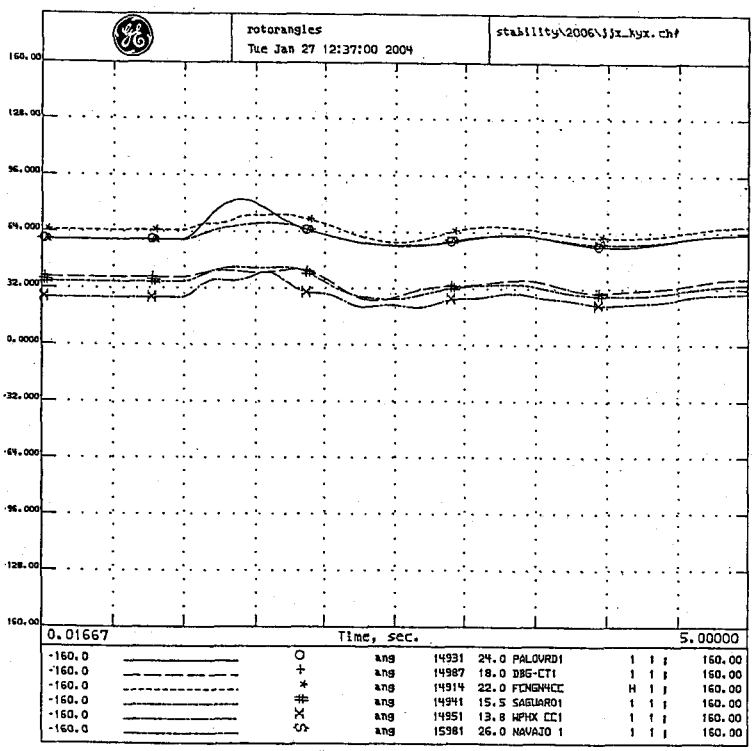

JOJOBA FLT JOJOBA-KYR LINE OUT
2006 HS3-SA APPROVED BASE CASE
OCTOBER 28, 2003
JJ-KYR STAB #1; 01/03; T=0 3P FLT JJ500;10% FLT DMPING;FLSH CAPS
NAV-MKP/MKP-YAV,PV-DV/NG;4C CLR FLT W/JJ-KYR;8C REIN;2006.dyd;WSCC.bpt

ALL COMMENTS FROM THE TSS REVIEW ARE ADDED.
MOST RECENT VERSION OF THE MDF USED.

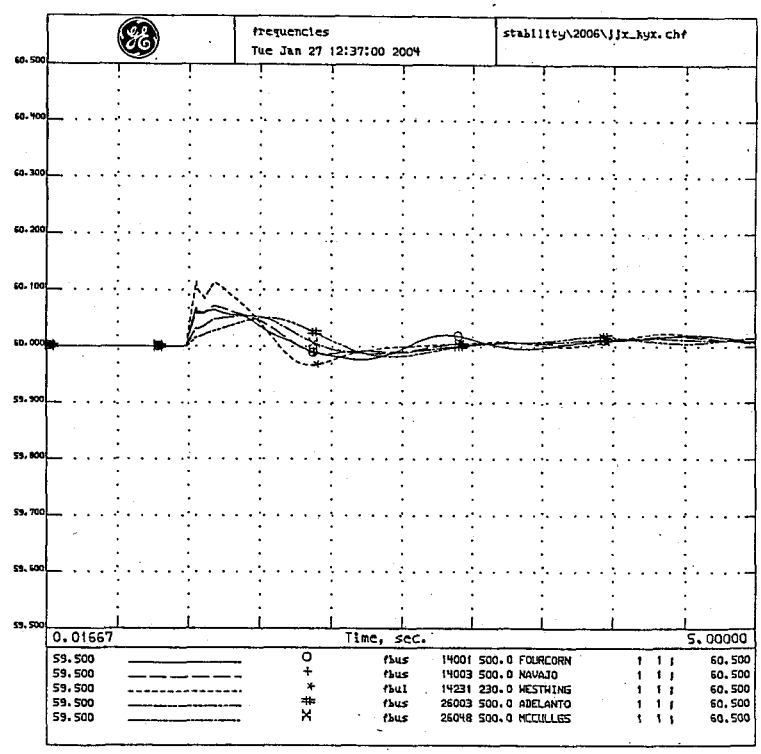

JOJOBA FLT JOJOBA-KYR LINE OUT
2006 HS3-SA APPROVED BASE CASE
OCTOBER 28, 2003
JJ-KYR STAB #1; 01/03; T=0 3P FLT JJ500;10% FLT DMPING;FLSH CAPS
NAV-MKP/MKP-YAV,PV-DV/NG;4C CLR FLT W/JJ-KYR;8C REIN;2006.dyd;WSCC.bpt

ALL COMMENTS FROM THE TSS REVIEW ARE ADDED.
MOST RECENT VERSION OF THE MDF USED.

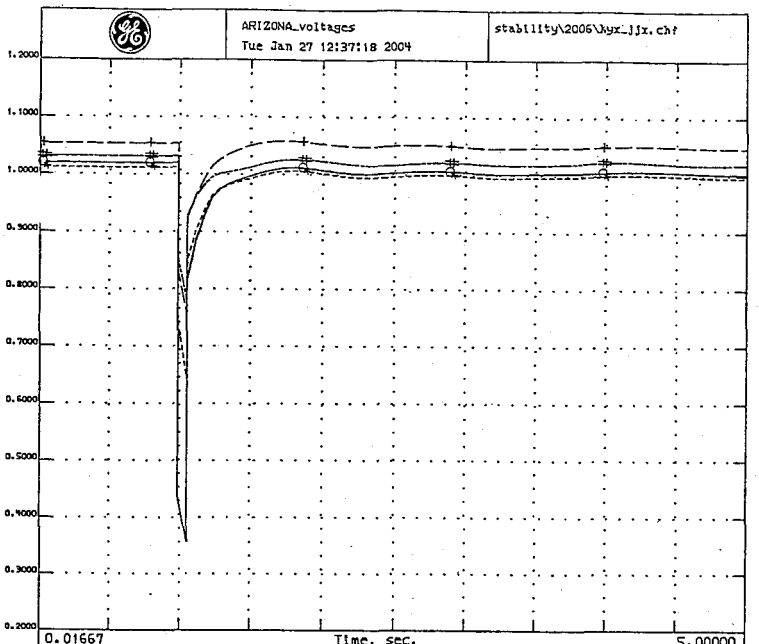

0.2000	———	○	vbus	15207	230.0	KYRENE	1	1	1.2000
0.2000	— — —	+	vbul	14203	230.0	CASGRAPS	1	1	1.2000
0.2000	- - - -	*	vbul	14221	230.0	PNPKAPS	1	1	1.2000
0.2000	———	#	vbul	14231	230.0	WESTWING	1	1	1.2000

KYRENE FLT KYR-JOJOBA LINE OUT
2006 HS3-SA APPROVED BASE CASE
OCTOBER 28, 2003
JJ-KYR STAB #1; 01/03; T=0 3P FLT KYR500;
4C CLR FLT W/JJ-KYR;2006.dyd;WSCC.bpt

ALL COMMENTS FROM THE TSS REVIEW ARE ADDED.
MOST RECENT VERSION OF THE MDF USED.

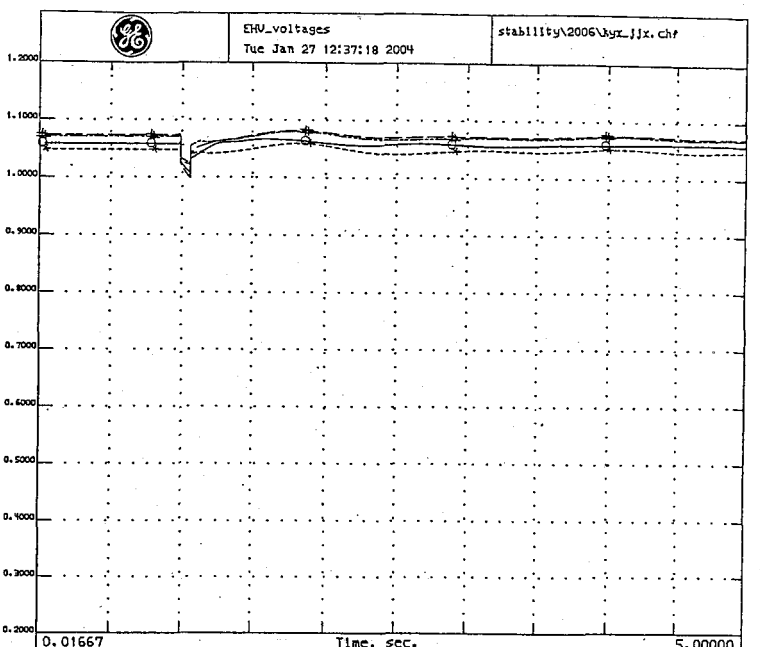

0.2000	———	○	vbus	14001	500.0	FOURCORN	1	1	1.2000
0.2000	— — —	+	vbus	14003	500.0	NAVAJO	1	1	1.2000
0.2000	- - - -	*	vbus	26003	500.0	ADELANTO	1	1	1.2000
0.2000	———	#	vbus	26048	500.0	MCCULLGS	1	1	1.2000

KYRENE FLT KYR-JOJOBA LINE OUT
2006 HS3-SA APPROVED BASE CASE
OCTOBER 28, 2003
JJ-KYR STAB #1; 01/03; T=0 3P FLT KYR500;
4C CLR FLT W/JJ-KYR;2006.dyd;WSCC.bpt

ALL COMMENTS FROM THE TSS REVIEW ARE ADDED.
MOST RECENT VERSION OF THE MDF USED.

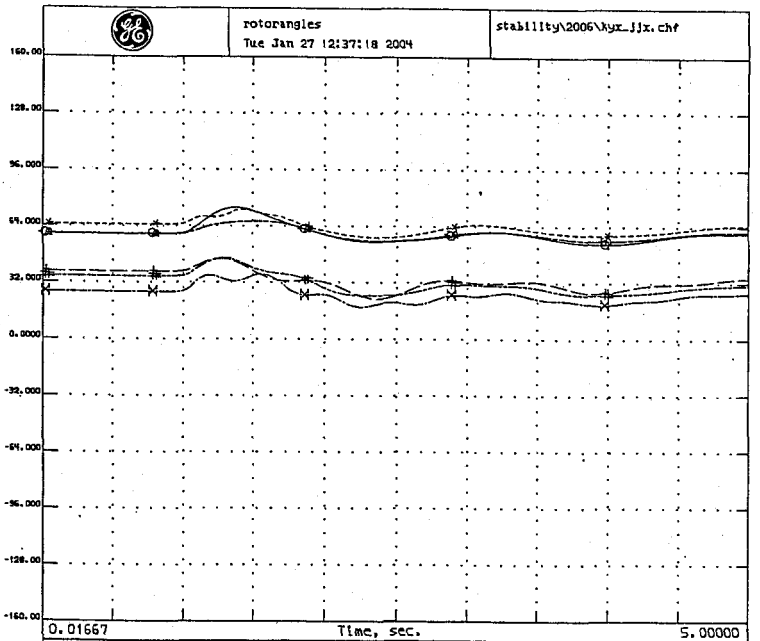

-160.0	———	○	ang	14931	24.0	PALOVRD1	1	1	160.00
-160.0	— — —	+	ang	14987	18.0	DBG-CT1	1	1	160.00
-160.0	- - - -	*	ang	14914	22.0	FCNGNHCC	H	1	160.00
-160.0	———	#	ang	14941	15.5	SAGUARO1	1	1	160.00
-160.0	———	×	ang	14951	13.8	WPHX CC1	1	1	160.00
-160.0	———	◇	ang	15981	26.0	NAVAJO 1	1	1	160.00

NE FLT KYR-JOJOBA LINE OUT
HS3-SA APPROVED BASE CASE
ER 28, 2003
YR STAB #1; 01/03; T=0 3P FLT KYR500;
4C CLR FLT W/JJ-KYR;2006.dyd;WSCC.bpt

ALL COMMENTS FROM THE TSS REVIEW ARE ADDED.
MOST RECENT VERSION OF THE MDF USED.

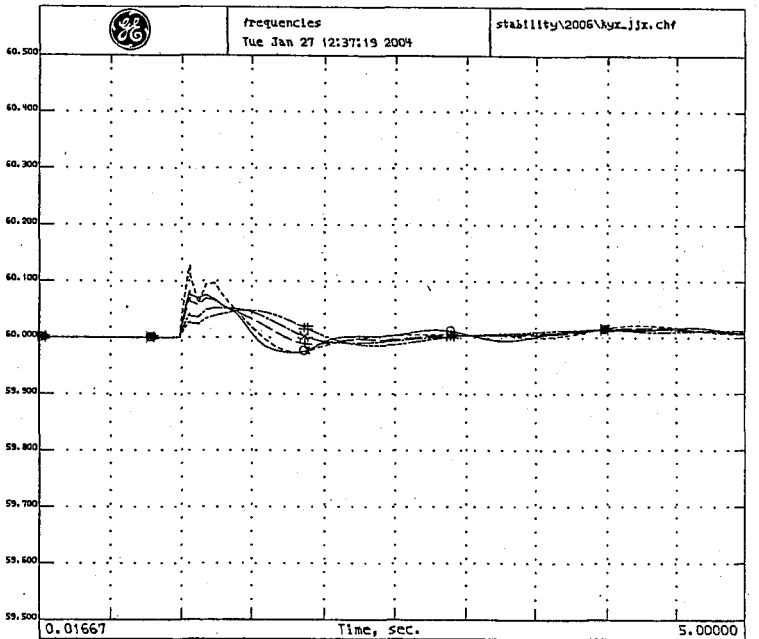

59.500	———	○	fbus	14001	500.0	FOURCORN	1	1	60.500
59.500	— — —	+	fbus	14003	500.0	NAVAJO	1	1	60.500
59.500	- - - -	*	fbul	14231	230.0	WESTWING	1	1	60.500
59.500	———	#	fbus	26003	500.0	ADELANTO	1	1	60.500
59.500	———	×	fbus	26048	500.0	MCCULLGS	1	1	60.500

KYRENE FLT KYR-JOJOBA LINE OUT
2006 HS3-SA APPROVED BASE CASE
OCTOBER 28, 2003
JJ-KYR STAB #1; 01/03; T=0 3P FLT KYR500;
4C CLR FLT W/JJ-KYR;2006.dyd;WSCC.bpt

ALL COMMENTS FROM THE TSS REVIEW ARE ADDED.
MOST RECENT VERSION OF THE MDF USED.

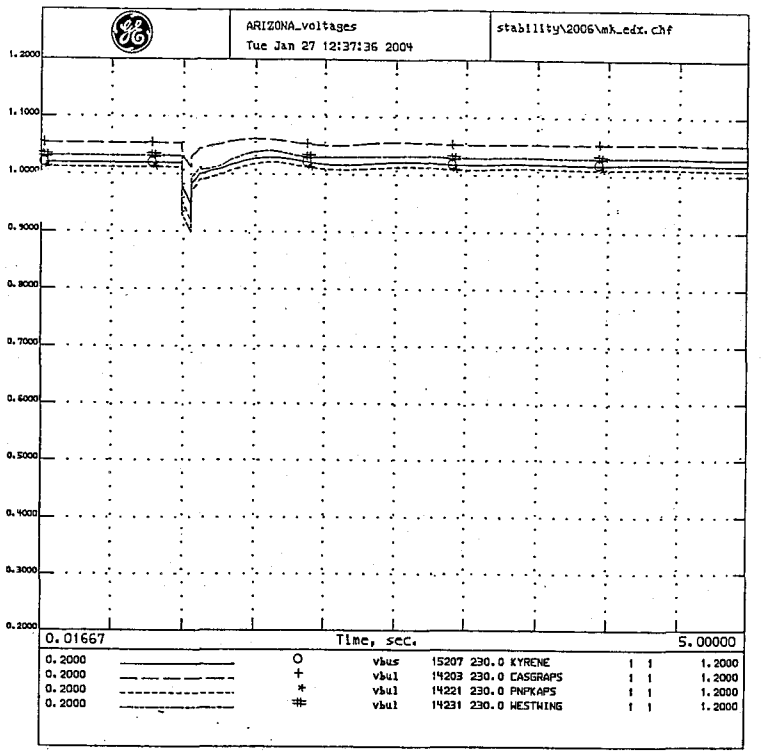

WESTERN ELECTRICITY COORDINATING COUNCIL
MKP FLT. MKP-ELD line out
OCTOBER 28, 2003
MKP-ELD STAB; 1/03; T=0 3P FLT MKP500;FLSH CAPS MKP-YAV/YAV-WWG,
NAV-MCC/MKP,MKP-ELD;4C CLR FLT W/MKP-ELD;8C REIN;2006.dyd;WSCC.bat

ALL COMMENTS FROM THE TSS REVIEW ARE ADDED.
MOST RECENT VERSION OF THE MDF USED.

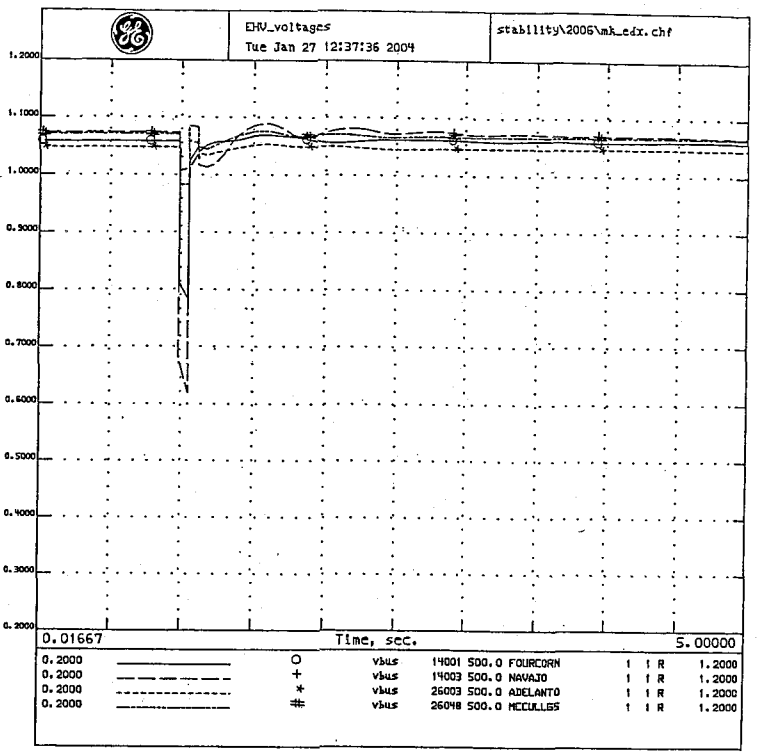

WESTERN ELECTRICITY COORDINATING COUNCIL
MKP FLT. MKP-ELD line out
OCTOBER 28, 2003
MKP-ELD STAB; 1/03; T=0 3P FLT MKP500;FLSH CAPS MKP-YAV/YAV-WWG,
NAV-MCC/MKP,MKP-ELD;4C CLR FLT W/MKP-ELD;8C REIN;2006.dyd;WSCC.bat

ALL COMMENTS FROM THE TSS REVIEW ARE ADDED.
MOST RECENT VERSION OF THE MDF USED.

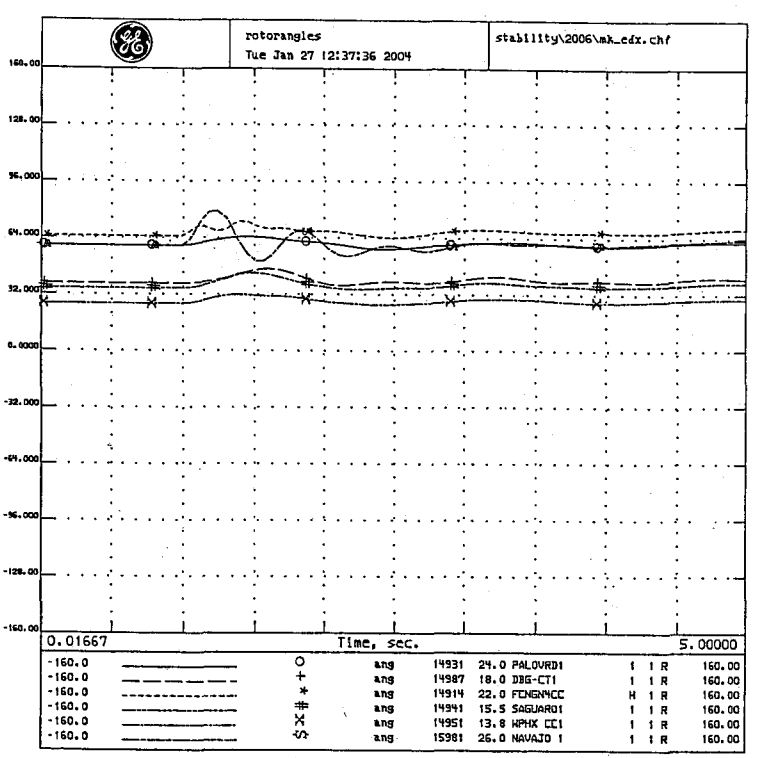

ERN ELECTRICITY COORDINATING COUNCIL
LT. MKP-ELD line out
ER 28, 2003
-ELD STAB; 1/03; T=0 3P FLT MKP500;FLSH CAPS MKP-YAV/YAV-WWG,
NAV-MCC/MKP,MKP-ELD;4C CLR FLT W/MKP-ELD;8C REIN;2006.dyd;WSCC.bat

ALL COMMENTS FROM THE TSS REVIEW ARE ADDED.
MOST RECENT VERSION OF THE MDF USED.

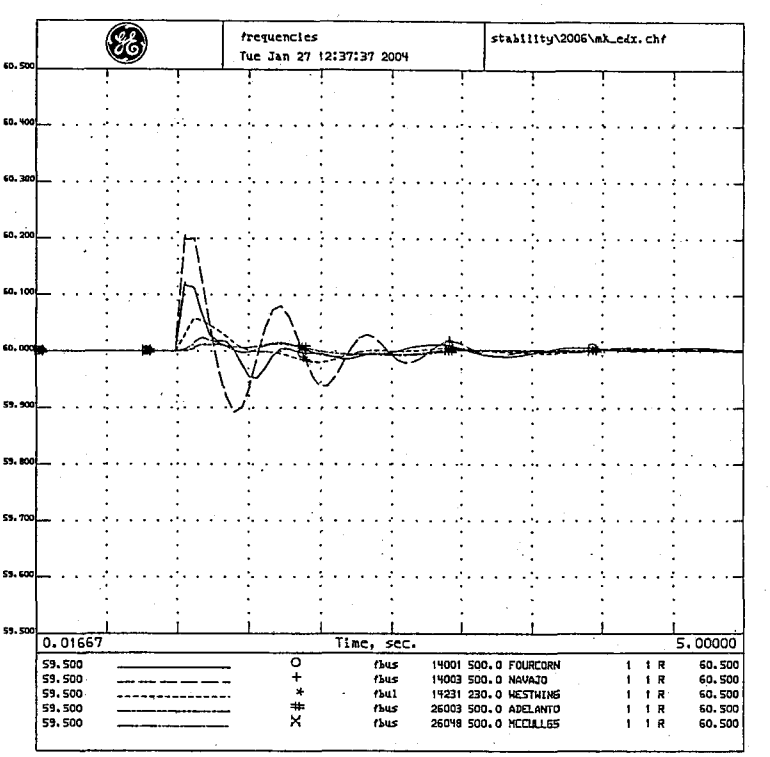

WESTERN ELECTRICITY COORDINATING COUNCIL
MKP FLT. MKP-ELD line out
OCTOBER 28, 2003
MKP-ELD STAB; 1/03; T=0 3P FLT MKP500;FLSH CAPS MKP-YAV/YAV-WWG,
NAV-MCC/MKP,MKP-ELD;4C CLR FLT W/MKP-ELD;8C REIN;2006.dyd;WSCC.bat

ALL COMMENTS FROM THE TSS REVIEW ARE ADDED.
MOST RECENT VERSION OF THE MDF USED.

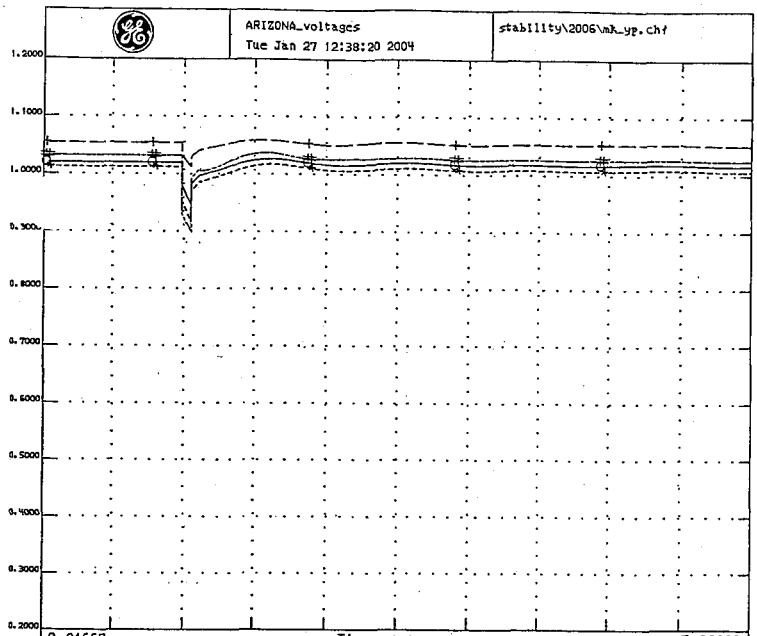

MKP. FLT MKP-YAV line out
2006 HS3-SA APPROVED BASE CASE
OCTOBER 28, 2003
MKP-YAV STAB; 1/03; T=0 3P FLT MKP500;FLSH CAPS MKP-YAV/YAV-WWG,
NAV-MCC/MKP,MKP-ELD;4C CLR FLT W/MKP-YAV;8C REIN;2006.dyd;WSCC.bat

ALL COMMENTS FROM THE TSS REVIEW ARE ADDED.
MOST RECENT VERSION OF THE MDF USED.

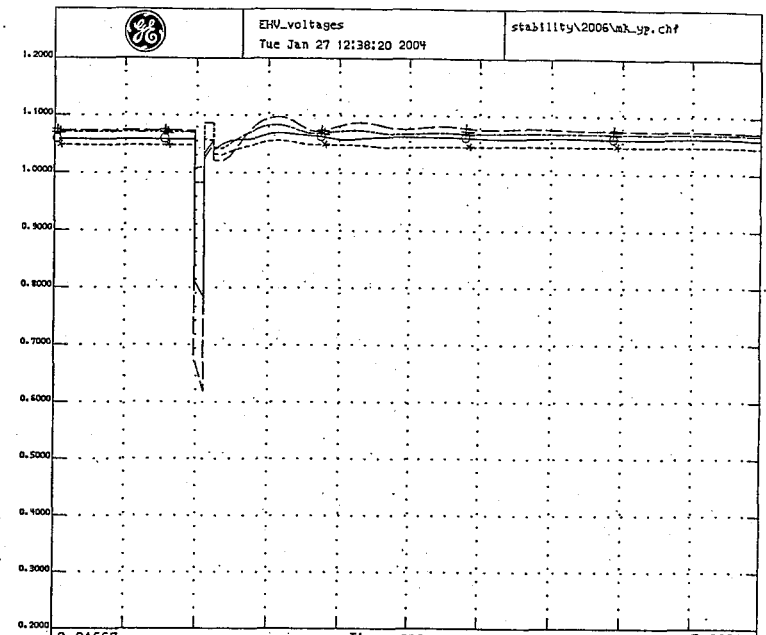

MKP. FLT MKP-YAV line out
2006 HS3-SA APPROVED BASE CASE
OCTOBER 28, 2003
MKP-YAV STAB; 1/03; T=0 3P FLT MKP500;FLSH CAPS MKP-YAV/YAV-WWG,
NAV-MCC/MKP,MKP-ELD;4C CLR FLT W/MKP-YAV;8C REIN;2006.dyd;WSCC.bat

ALL COMMENTS FROM THE TSS REVIEW ARE ADDED.
MOST RECENT VERSION OF THE MDF USED.

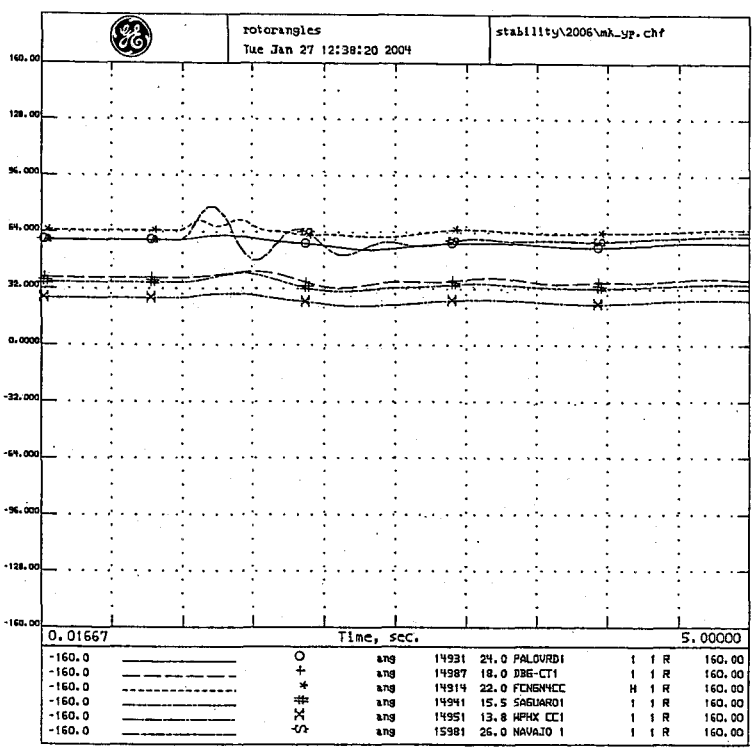

FLT MKP-YAV line out
HS3-SA APPROVED BASE CASE
ER 28, 2003
YAV STAB; 1/03; T=0 3P FLT MKP500;FLSH CAPS MKP-YAV/YAV-WWG,
NAV-MCC/MKP,MKP-ELD;4C CLR FLT W/MKP-YAV;8C REIN;2006.dyd;WSCC.bat

ALL COMMENTS FROM THE TSS REVIEW ARE ADDED.
MOST RECENT VERSION OF THE MDF USED.

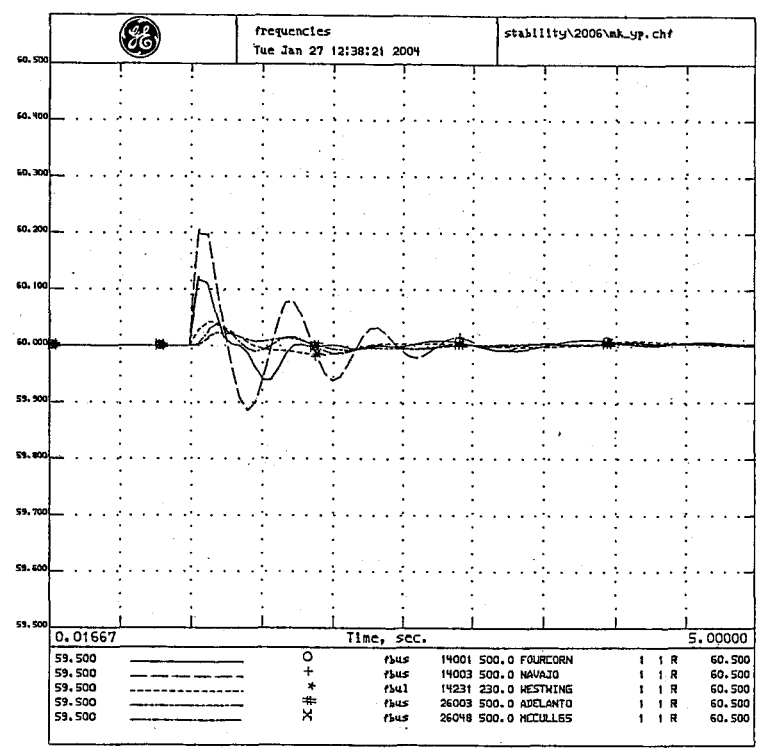

MKP. FLT MKP-YAV line out
2006 HS3-SA APPROVED BASE CASE
OCTOBER 28, 2003
MKP-YAV STAB; 1/03; T=0 3P FLT MKP500;FLSH CAPS MKP-YAV/YAV-WWG,
NAV-MCC/MKP,MKP-ELD;4C CLR FLT W/MKP-YAV;8C REIN;2006.dyd;WSCC.bat

ALL COMMENTS FROM THE TSS REVIEW ARE ADDED.
MOST RECENT VERSION OF THE MDF USED.

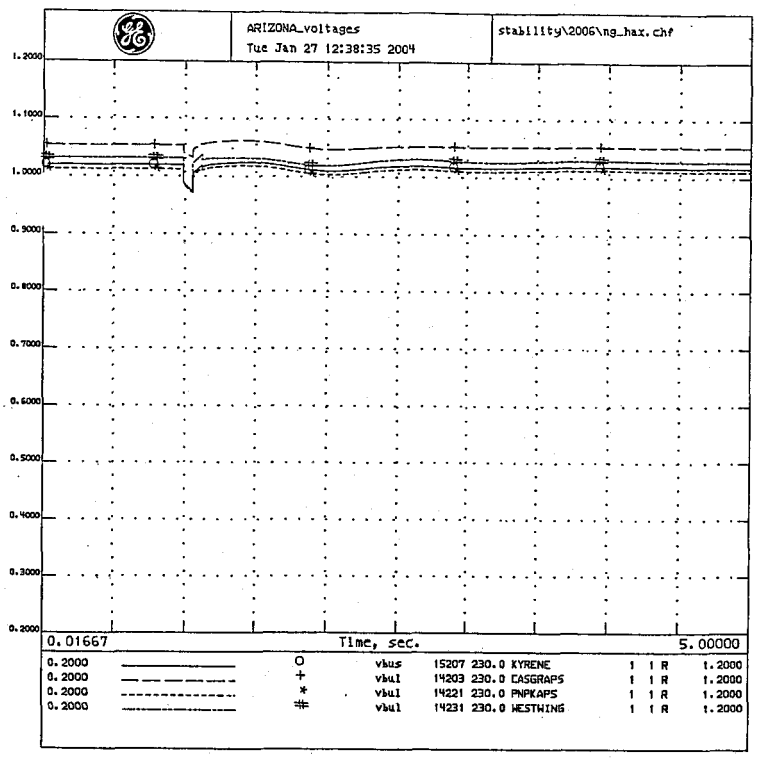

N.GILA FLT N.GILA-HASSY LINE OUT
2006 HS3-SA APPROVED BASE CASE
OCTOBER 28, 2003
N.GILA STAB,3 PH FLT N.GILA 500KV
FLASH CAPS,W/4 CYC CLR FLT;HASSAYMPA-NG OUT;4/8 CYC REIN CAPS

ALL COMMENTS FROM THE TSS REVIEW ARE ADDED.
MOST RECENT VERSION OF THE MDF USED.

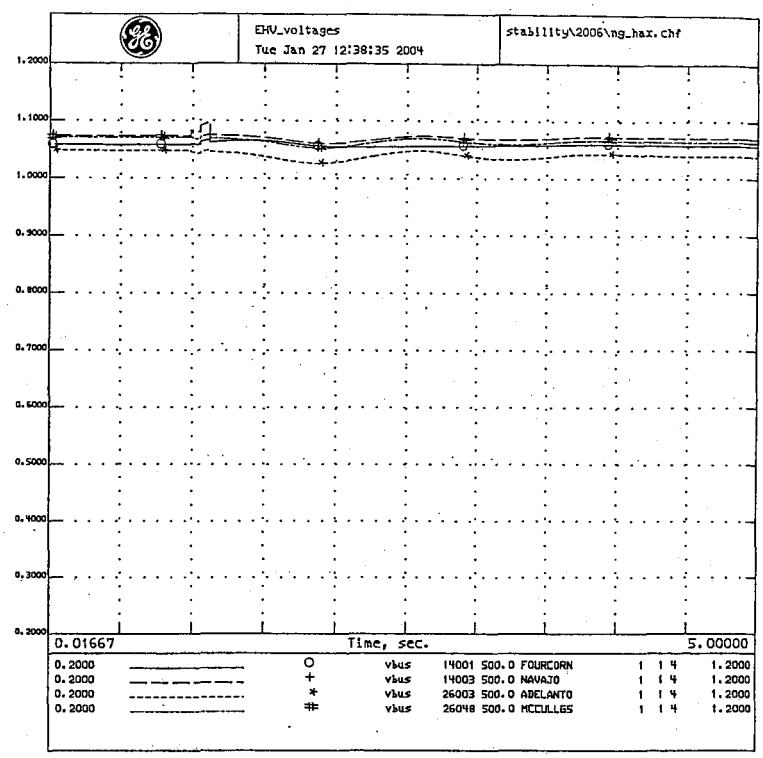

N.GILA FLT N.GILA-HASSY LINE OUT
2006 HS3-SA APPROVED BASE CASE
OCTOBER 28, 2003
N.GILA STAB,3 PH FLT N.GILA 500KV
FLASH CAPS,W/4 CYC CLR FLT;HASSAYMPA-NG OUT;4/8 CYC REIN CAPS

ALL COMMENTS FROM THE TSS REVIEW ARE ADDED.
MOST RECENT VERSION OF THE MDF USED.

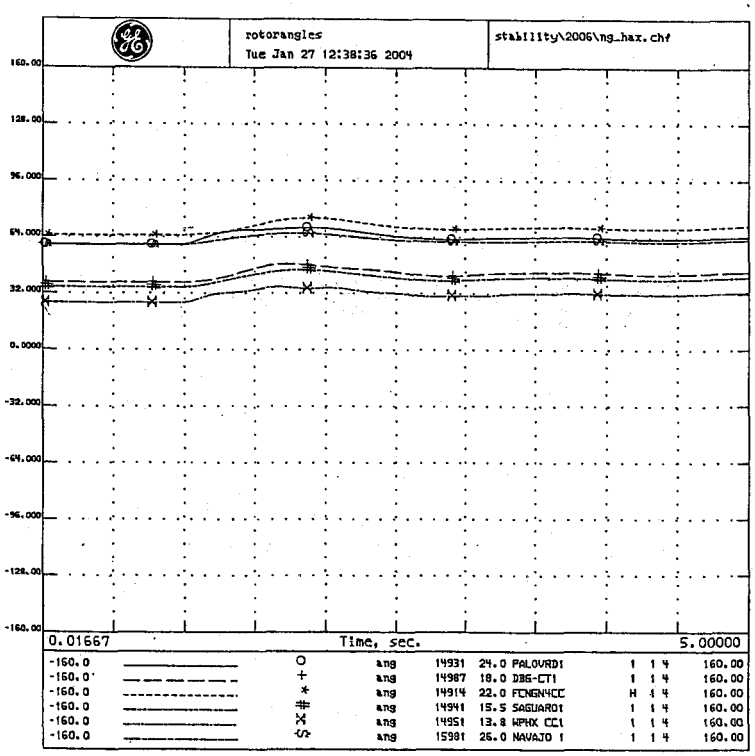

'LA FLT N.GILA-HASSY LINE OUT
HS3-SA APPROVED BASE CASE
:ER 28, 2003
... .ILA STAB,3 PH FLT N.GILA 500KV
FLASH CAPS,W/4 CYC CLR FLT;HASSAYMPA-NG OUT;4/8 CYC REIN CAPS

ALL COMMENTS FROM THE TSS REVIEW ARE ADDED.
MOST RECENT VERSION OF THE MDF USED.

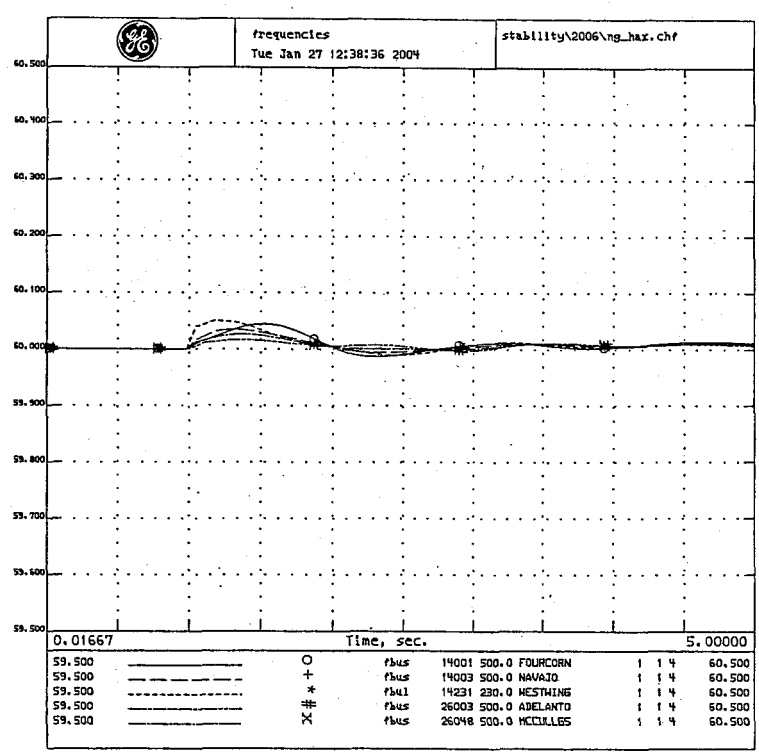

N.GILA FLT N.GILA-HASSY LINE OUT
2006 HS3-SA APPROVED BASE CASE
OCTOBER 28, 2003
N.GILA STAB,3 PH FLT N.GILA 500KV
FLASH CAPS,W/4 CYC CLR FLT;HASSAYMPA-NG OUT;4/8 CYC REIN CAPS

ALL COMMENTS FROM THE TSS REVIEW ARE ADDED.
MOST RECENT VERSION OF THE MDF USED.

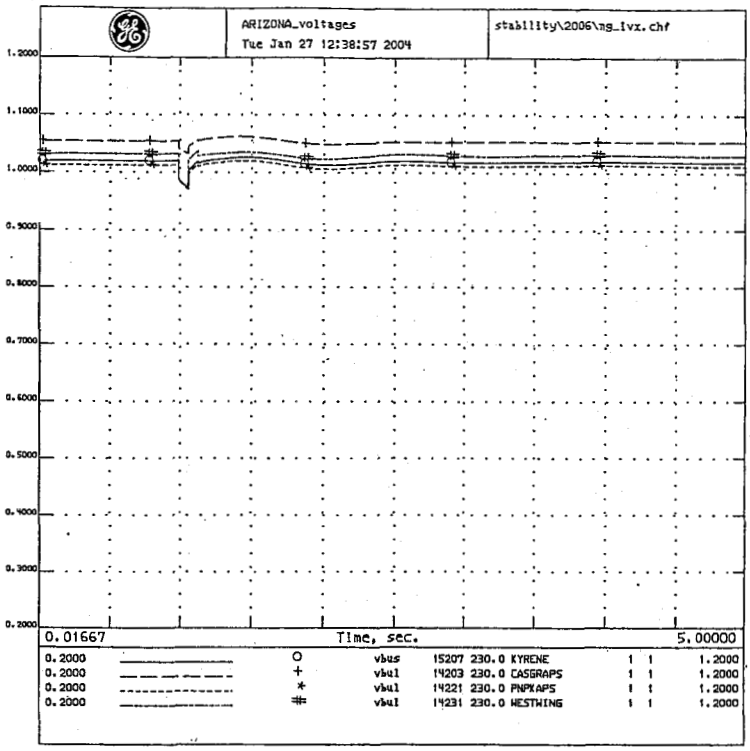

N.GILA FLT N.GILA-IMP. V LINE OUT
2006 HS3-SA APPROVED BASE CASE
OCTOBER 28, 2003
N.GILA STAB,3 PH FLT N.GILA 500KV
FLASH CAPS,W/4 CYC CLR FLT;IMPV-NG OUT;4/8 CYC REIN CAPS

ALL COMMENTS FROM THE TSS REVIEW ARE ADDED.
MOST RECENT VERSION OF THE MDF USED.

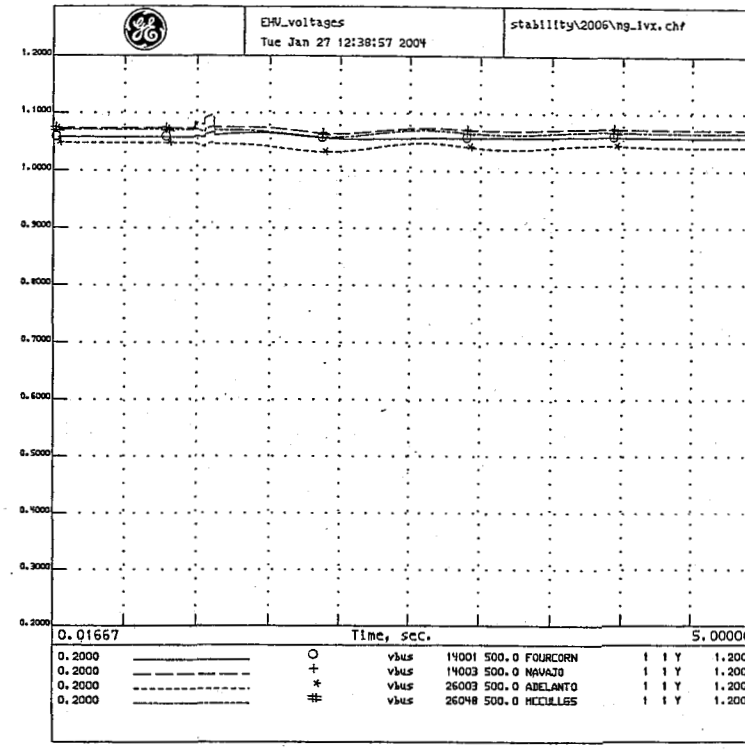

N.GILA FLT N.GILA-IMP. V LINE OUT
2006 HS3-SA APPROVED BASE CASE
OCTOBER 28, 2003
N.GILA STAB,3 PH FLT N.GILA 500KV
FLASH CAPS,W/4 CYC CLR FLT;IMPV-NG OUT;4/8 CYC REIN CAPS

ALL COMMENTS FROM THE TSS REVIEW ARE ADDED.
MOST RECENT VERSION OF THE MDF USED.

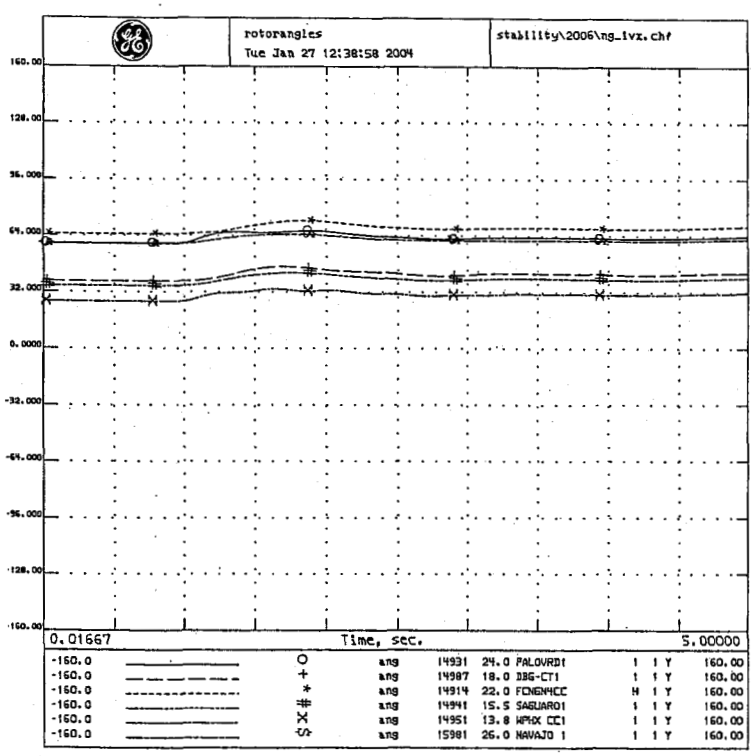

N.GILA FLT N.GILA-IMP. V LINE OUT
2006 HS3-SA APPROVED BASE CASE
OCTOBER 28, 2003
N.GILA STAB,3 PH FLT N.GILA 500KV
FLASH CAPS,W/4 CYC CLR FLT;IMPV-NG OUT;4/8 CYC REIN CAPS

ALL COMMENTS FROM THE TSS REVIEW ARE ADDED.
MOST RECENT VERSION OF THE MDF USED.

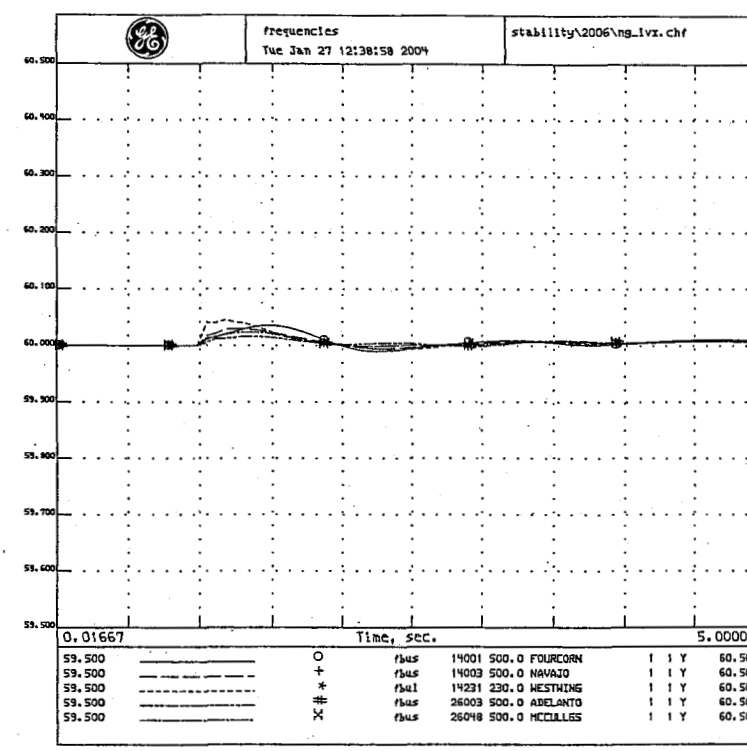

N.GILA FLT N.GILA-IMP. V LINE OUT
2006 HS3-SA APPROVED BASE CASE
OCTOBER 28, 2003
N.GILA STAB,3 PH FLT N.GILA 500KV
FLASH CAPS,W/4 CYC CLR FLT;IMPV-NG OUT;4/8 CYC REIN CAPS

ALL COMMENTS FROM THE TSS REVIEW ARE ADDED.
MOST RECENT VERSION OF THE MDF USED.

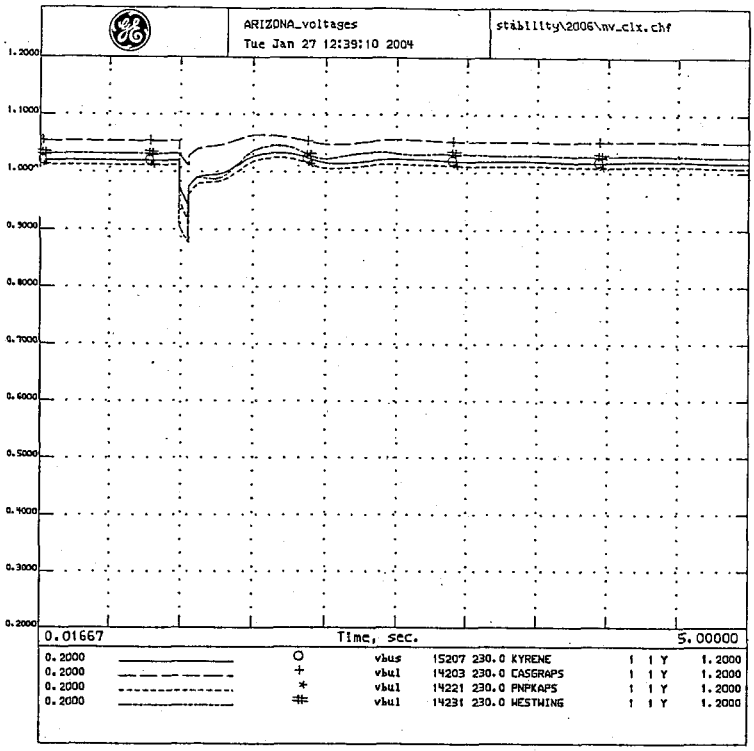

WESTERN ELECTRICITY COORDINATING COUNCIL
NAV. FLT. Nav-Crystal line out
OCTOBER 28, 2003
NAV-CRYS STAB; 1/03; T=0 3P FLT NAV500; 6% FLT DMPING;FLSH CAPS
NAV-MCC/MKP,MKP-ELD;4C CLR FLT W/NAV-CRYS;8C REIN;2006.dyd;WSCC.bat

ALL COMMENTS FROM THE TSS REVIEW ARE ADDED.
MOST RECENT VERSION OF THE MDF USED.

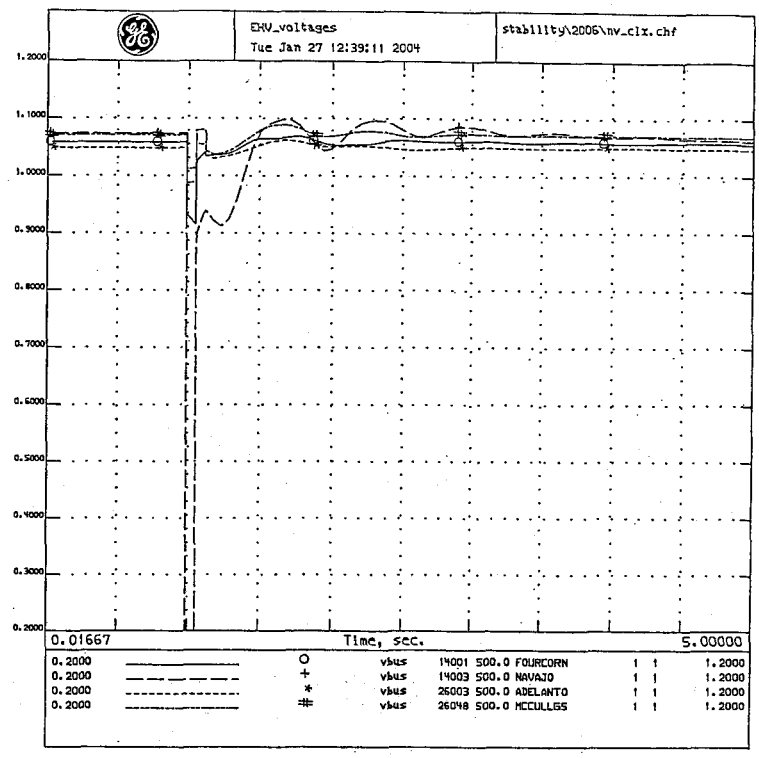

WESTERN ELECTRICITY COORDINATING COUNCIL
NAV. FLT. Nav-Crystal line out
OCTOBER 28, 2003
NAV-CRYS STAB; 1/03; T=0 3P FLT NAV500; 6% FLT DMPING;FLSH CAPS
NAV-MCC/MKP,MKP-ELD;4C CLR FLT W/NAV-CRYS;8C REIN;2006.dyd;WSCC.bat

ALL COMMENTS FROM THE TSS REVIEW ARE ADDED.
MOST RECENT VERSION OF THE MDF USED.

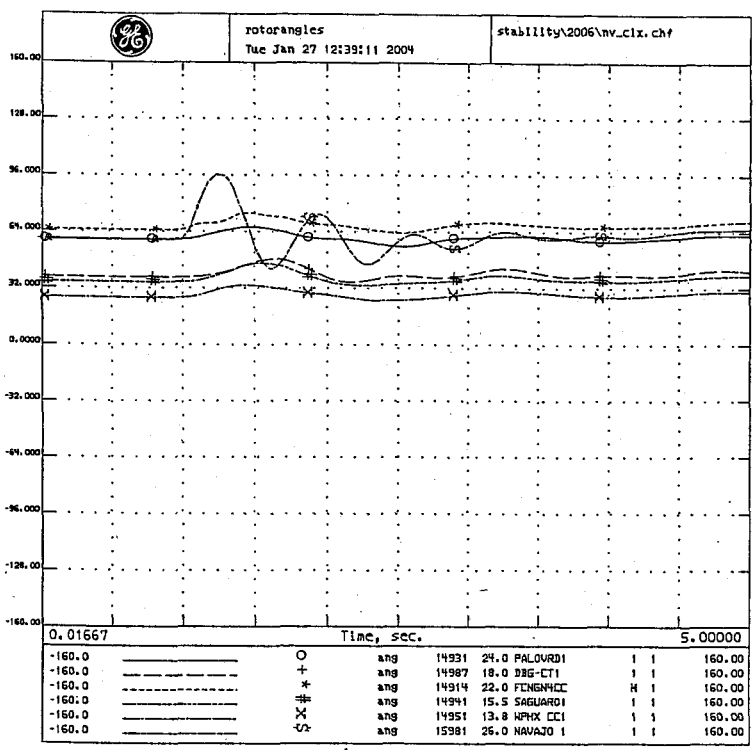

RN ELECTRICITY COORDINATING COUNCIL
FLT. Nav-Crystal line out
ER 28, 2003
NAV-CRYS STAB; 1/03; T=0 3P FLT NAV500; 6% FLT DMPING;FLSH CAPS
NAV-MCC/MKP,MKP-ELD;4C CLR FLT W/NAV-CRYS;8C REIN;2006.dyd;WSCC.bat

ALL COMMENTS FROM THE TSS REVIEW ARE ADDED.
MOST RECENT VERSION OF THE MDF USED.

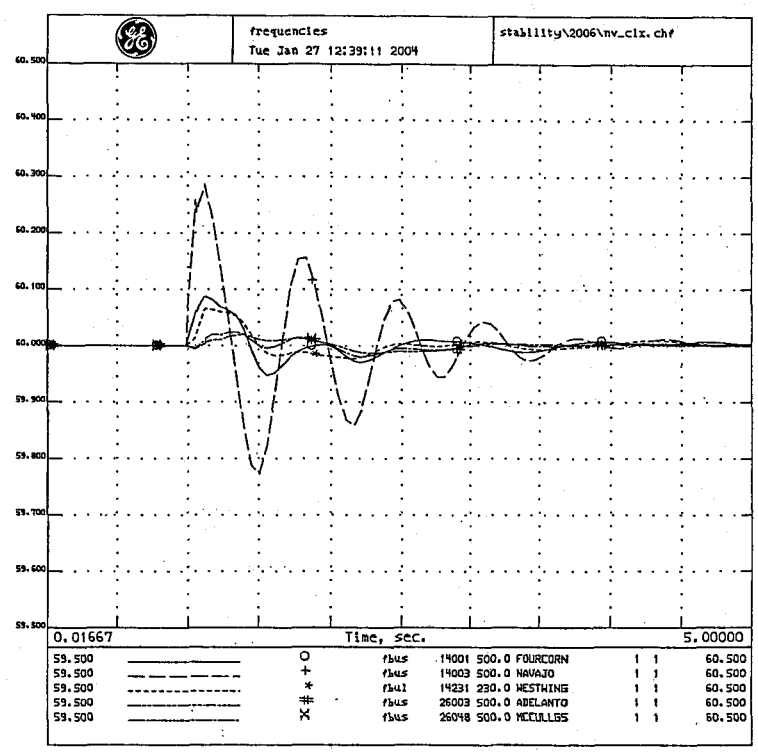

WESTERN ELECTRICITY COORDINATING COUNCIL
NAV. FLT. Nav-Crystal line out
OCTOBER 28, 2003
NAV-CRYS STAB; 1/03; T=0 3P FLT NAV500; 6% FLT DMPING;FLSH CAPS
NAV-MCC/MKP,MKP-ELD;4C CLR FLT W/NAV-CRYS;8C REIN;2006.dyd;WSCC.bat

ALL COMMENTS FROM THE TSS REVIEW ARE ADDED.
MOST RECENT VERSION OF THE MDF USED.

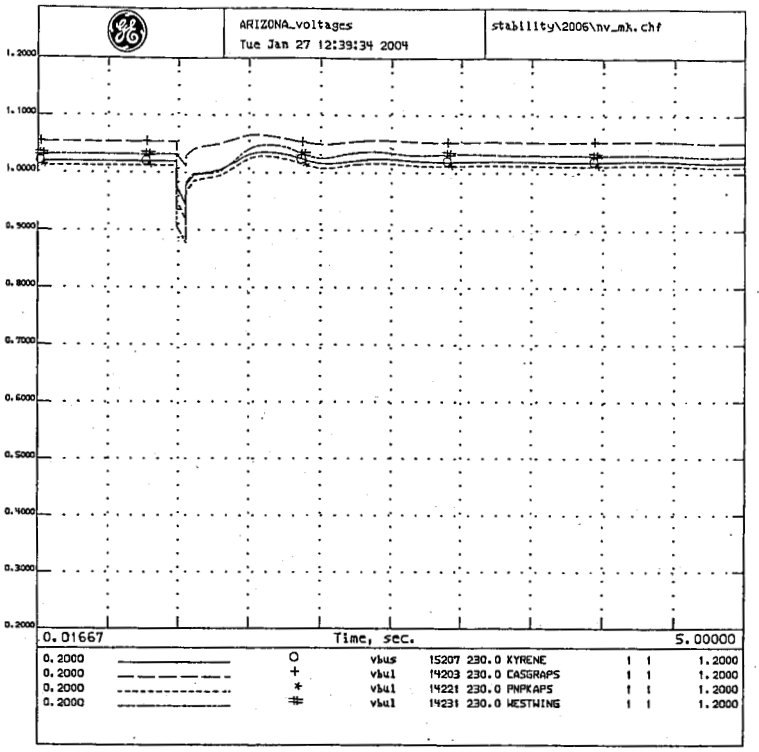

WESTERN ELECTRICITY COORDINATING COUNCIL
NAV. FLT. Navjo-Mnk. line out
OCTOBER 28, 2003
NAV-MKP STAB; 1/03; T=0 3P FLT NAV500; 6% FLT DMPING;FLSH CAPS
NAV-MCC/MKP,MKP-ELD;4C CLR FLT W/NAV-MKP;8C REIN;2006.dyd;WSCC.bat

ALL COMMENTS FROM THE TSS REVIEW ARE ADDED.
MOST RECENT VERSION OF THE MDF USED.

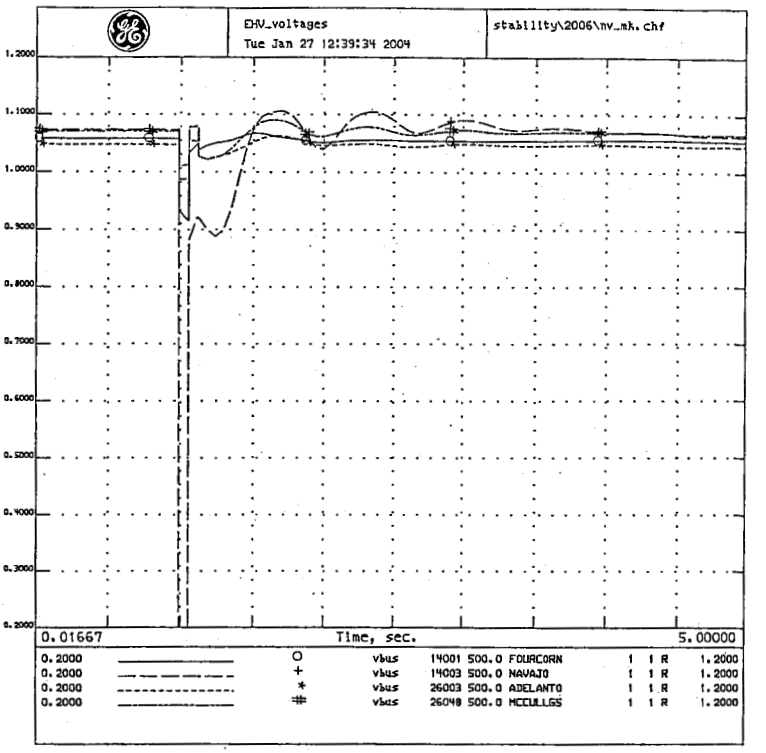

WESTERN ELECTRICITY COORDINATING COUNCIL
NAV. FLT. Navjo-Mnk. line out
OCTOBER 28, 2003
NAV-MKP STAB; 1/03; T=0 3P FLT NAV500; 6% FLT DMPING;FLSH CAPS
NAV-MCC/MKP,MKP-ELD;4C CLR FLT W/NAV-MKP;8C REIN;2006.dyd;WSCC.bat

ALL COMMENTS FROM THE TSS REVIEW ARE ADDED.
MOST RECENT VERSION OF THE MDF USED.

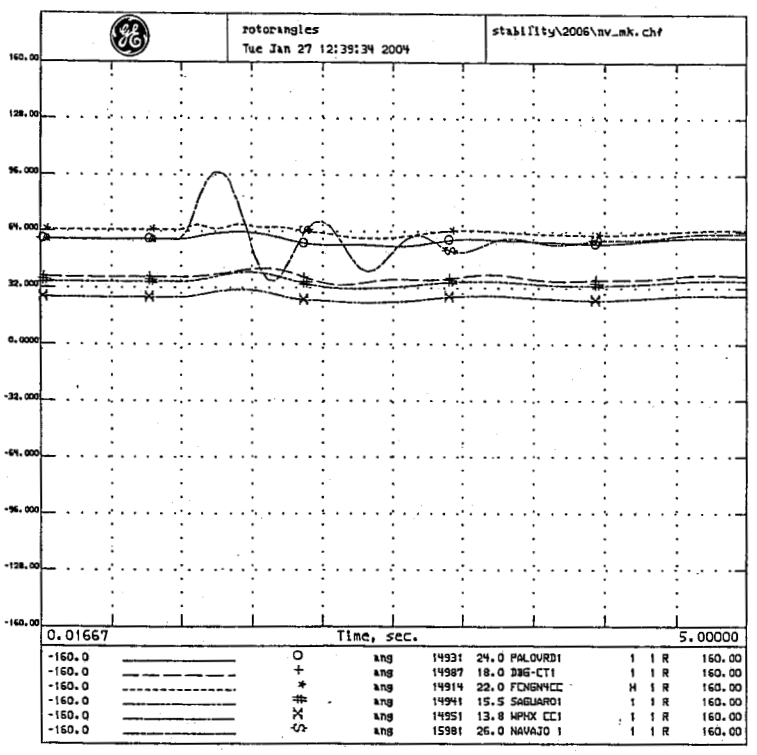

"ERN ELECTRICITY COORDINATING COUNCIL
FLT. Navjo-Mnk. line out
ER 28, 2003
...-MKP STAB; 1/03; T=0 3P FLT NAV500; 6% FLT DMPING;FLSH CAPS
NAV-MCC/MKP,MKP-ELD;4C CLR FLT W/NAV-MKP;8C REIN;2006.dyd;WSCC.bat

ALL COMMENTS FROM THE TSS REVIEW ARE ADDED.
MOST RECENT VERSION OF THE MDF USED.

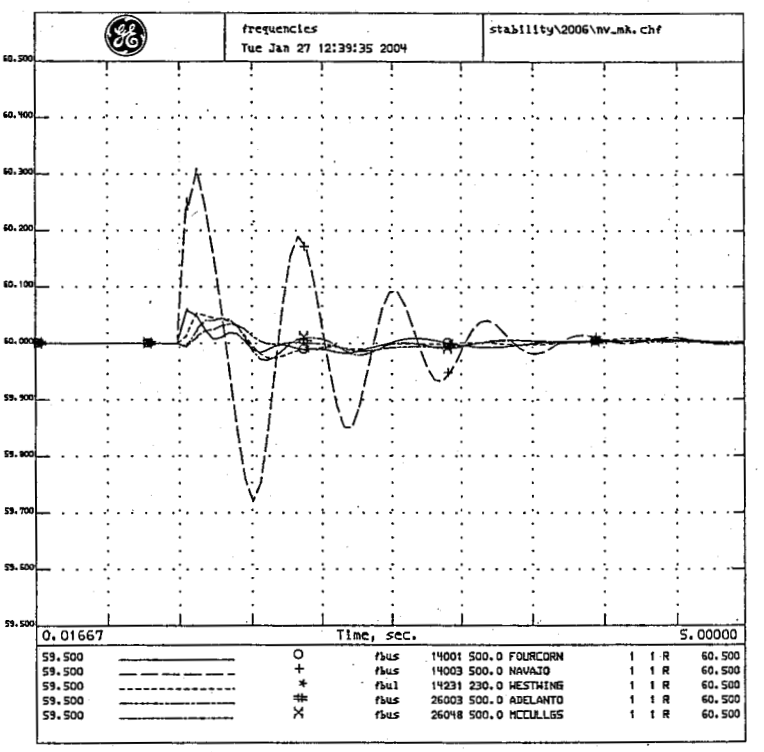

WESTERN ELECTRICITY COORDINATING COUNCIL
NAV. FLT. Navjo-Mnk. line out
OCTOBER 28, 2003
NAV-MKP STAB; 1/03; T=0 3P FLT NAV500; 6% FLT DMPING;FLSH CAPS
NAV-MCC/MKP,MKP-ELD;4C CLR FLT W/NAV-MKP;8C REIN;2006.dyd;WSCC.bat

ALL COMMENTS FROM THE TSS REVIEW ARE ADDED.
MOST RECENT VERSION OF THE MDF USED.

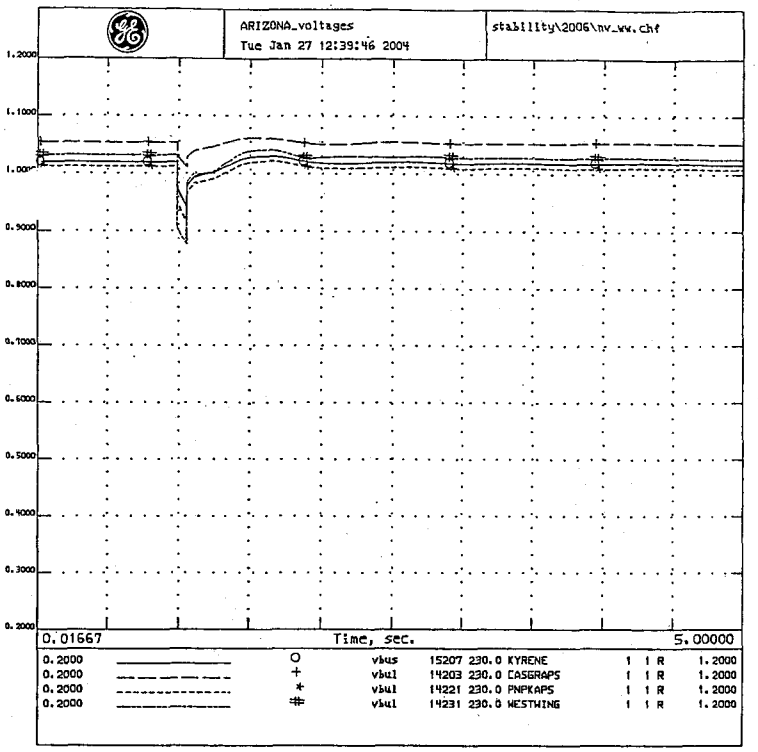

NAV FLT NAV-WW LINE OUT
2006 HS3-SA APPROVED BASE CASE
OCTOBER 28, 2003
NAV-WWG STAB; 1/03; T=0 3P FLT NAV500; 6% FLT DMPING;FLSH CAPS
NAV-MCC/MKP,MKP-ELD;4C CLR FLT W/NAV-WWG;8C REIN;2006.dyd;WSCC.bat

ALL COMMENTS FROM THE TSS REVIEW ARE ADDED.
MOST RECENT VERSION OF THE MDF USED.

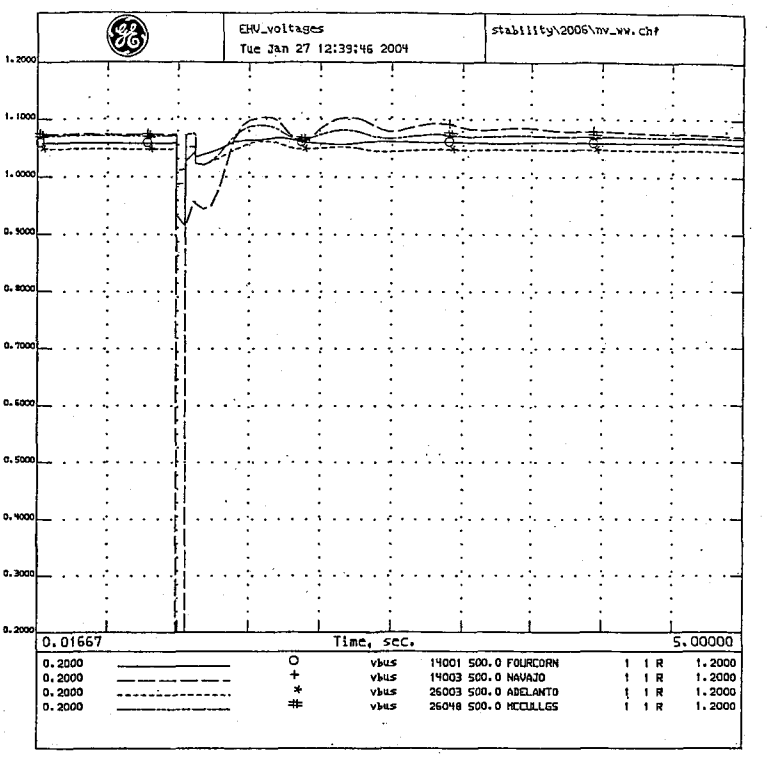

NAV FLT NAV-WW LINE OUT
2006 HS3-SA APPROVED BASE CASE
OCTOBER 28, 2003
NAV-WWG STAB; 1/03; T=0 3P FLT NAV500; 6% FLT DMPING;FLSH CAPS
NAV-MCC/MKP,MKP-ELD;4C CLR FLT W/NAV-WWG;8C REIN;2006.dyd;WSCC.bat

ALL COMMENTS FROM THE TSS REVIEW ARE ADDED.
MOST RECENT VERSION OF THE MDF USED.

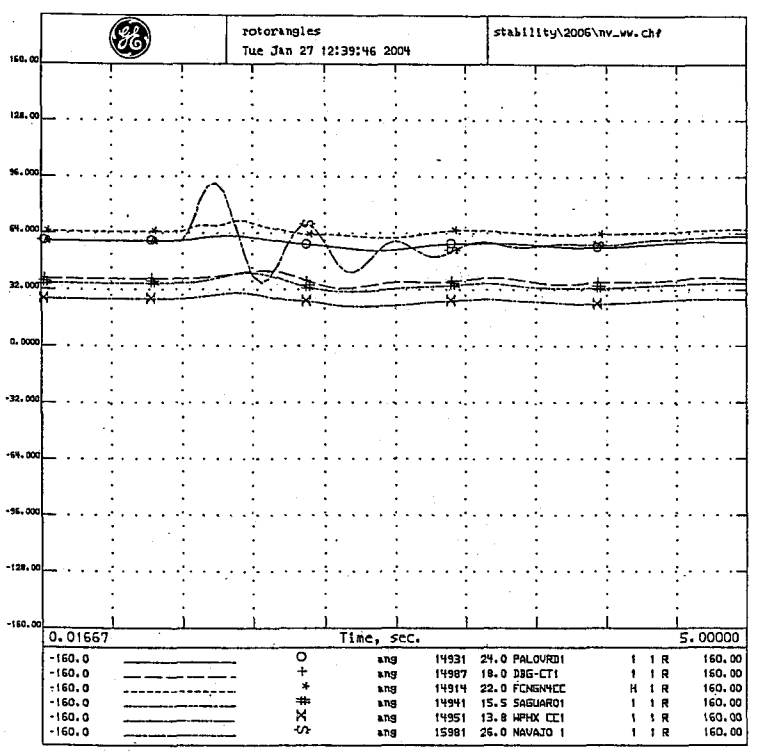

FLT NAV-WW LINE OUT
HS3-SA APPROVED BASE CASE
BER 28, 2003
NAV-WWG STAB; 1/03; T=0 3P FLT NAV500; 6% FLT DMPING;FLSH CAPS
NAV-MCC/MKP,MKP-ELD;4C CLR FLT W/NAV-WWG;8C REIN;2006.dyd;WSCC.bat

ALL COMMENTS FROM THE TSS REVIEW ARE ADDED.
MOST RECENT VERSION OF THE MDF USED.

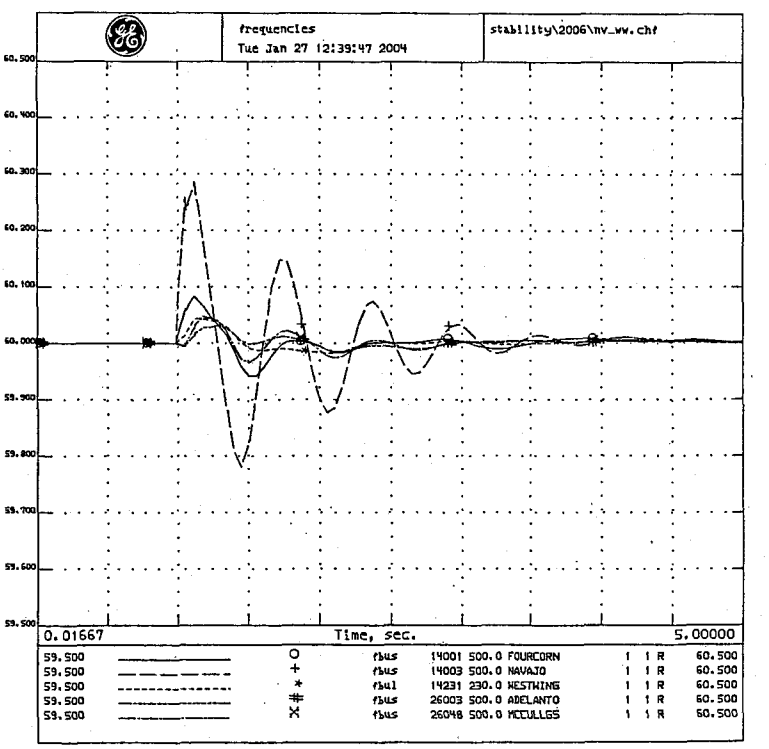

NAV FLT NAV-WW LINE OUT
2006 HS3-SA APPROVED BASE CASE
OCTOBER 28, 2003
NAV-WWG STAB; 1/03; T=0 3P FLT NAV500; 6% FLT DMPING;FLSH CAPS
NAV-MCC/MKP,MKP-ELD;4C CLR FLT W/NAV-WWG;8C REIN;2006.dyd;WSCC.bat

ALL COMMENTS FROM THE TSS REVIEW ARE ADDED.
MOST RECENT VERSION OF THE MDF USED.

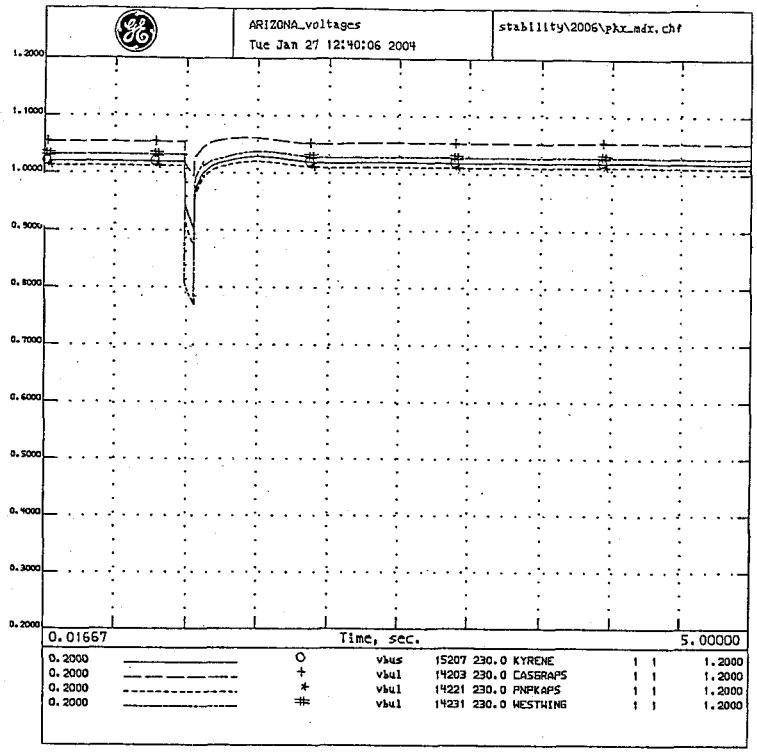

PERKINS FLT PERKINS-MEAD LINE OUT
2006 HS3-SA APPROVED BASE CASE
OCTOBER 28, 2003
PERK-MEAD STAB; 01/03; T=0 3P FLT PERK500;FLSH CAPS MKP-YAV/YAV-WWG,
NAV-MKP/WWG;4C CLR FLT W/PERK-MEAD;8C REIN;2006.dyd;WSCC.bat

ALL COMMENTS FROM THE TSS REVIEW ARE ADDED.
MOST RECENT VERSION OF THE MDF USED.

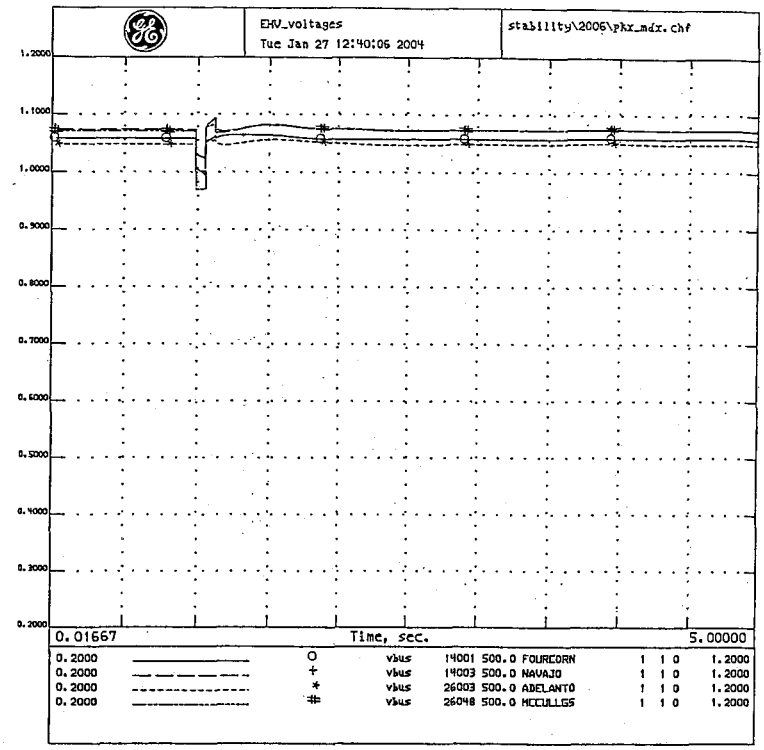

PERKINS FLT PERKINS-MEAD LINE OUT
2006 HS3-SA APPROVED BASE CASE
OCTOBER 28, 2003
PERK-MEAD STAB; 01/03; T=0 3P FLT PERK500;FLSH CAPS MKP-YAV/YAV-WWG,
NAV-MKP/WWG;4C CLR FLT W/PERK-MEAD;8C REIN;2006.dyd;WSCC.bat

ALL COMMENTS FROM THE TSS REVIEW ARE ADDED.
MOST RECENT VERSION OF THE MDF USED.

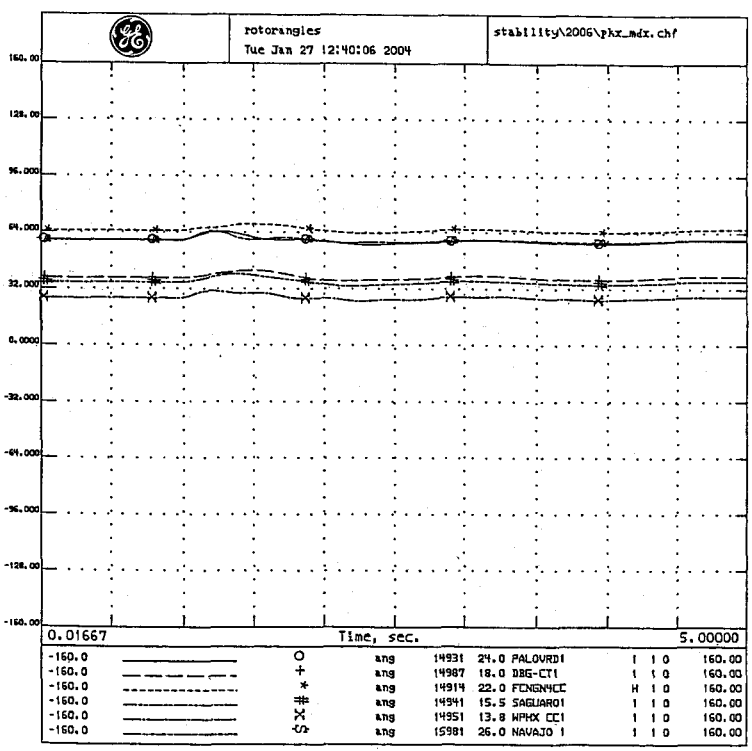

PERKINS FLT PERKINS-MEAD LINE OUT
2006 HS3-SA APPROVED BASE CASE
OCTOBER 28, 2003
PERK-MEAD STAB; 01/03; T=0 3P FLT PERK500;FLSH CAPS MKP-YAV/YAV-WWG,
NAV-MKP/WWG;4C CLR FLT W/PERK-MEAD;8C REIN;2006.dyd;WSCC.bat

ALL COMMENTS FROM THE TSS REVIEW ARE ADDED.
MOST RECENT VERSION OF THE MDF USED.

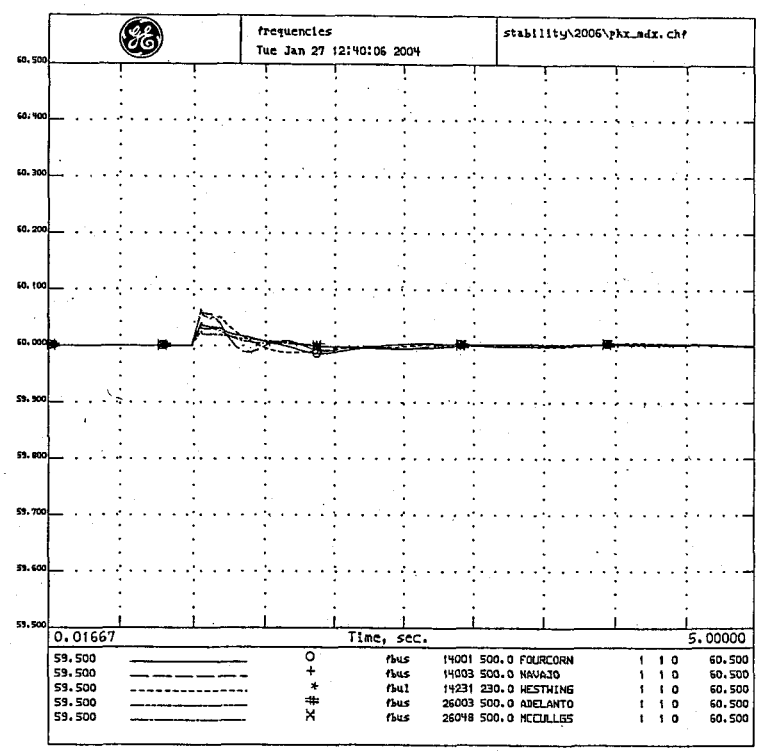

PERKINS FLT PERKINS-MEAD LINE OUT
2006 HS3-SA APPROVED BASE CASE
OCTOBER 28, 2003
PERK-MEAD STAB; 01/03; T=0 3P FLT PERK500;FLSH CAPS MKP-YAV/YAV-WWG,
NAV-MKP/WWG;4C CLR FLT W/PERK-MEAD;8C REIN;2006.dyd;WSCC.bat

ALL COMMENTS FROM THE TSS REVIEW ARE ADDED.
MOST RECENT VERSION OF THE MDF USED.

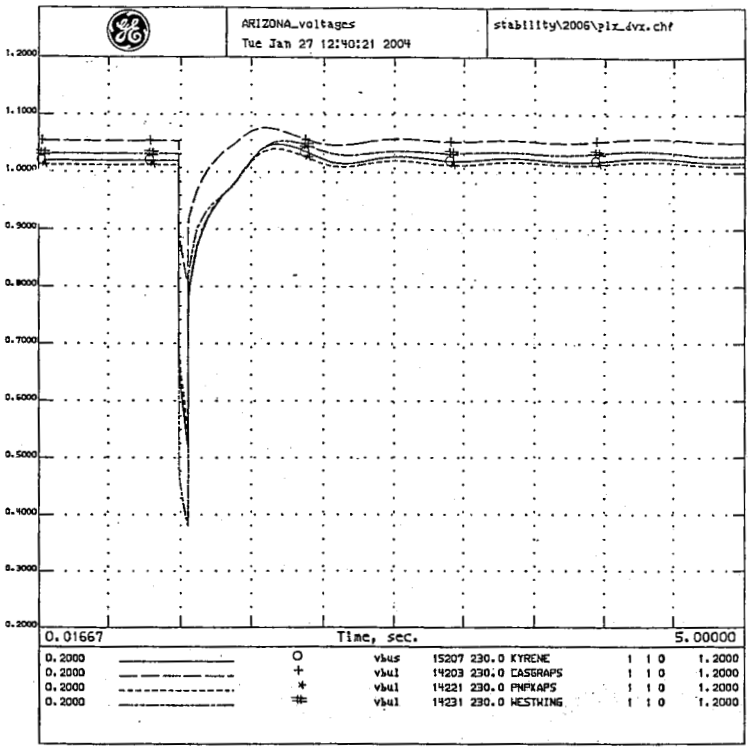

WESTERN ELECTRICITY COORDINATING COUNCIL
PV FLT. w/PV - Devers line out
OCTOBER 28, 2003
PV-DEV STAB; 1/03; T=0 3P FLT PVS00;10% FLT DMPING;FLSH CAPS
NAV-MKP/MKP-YAV,PV-DV/NG;4C CLR FLT W/PV-DEV8C REIN;2006.dyd;WSCC.bat

ALL COMMENTS FROM THE TSS REVIEW ARE ADDED.
MOST RECENT VERSION OF THE MDF USED.

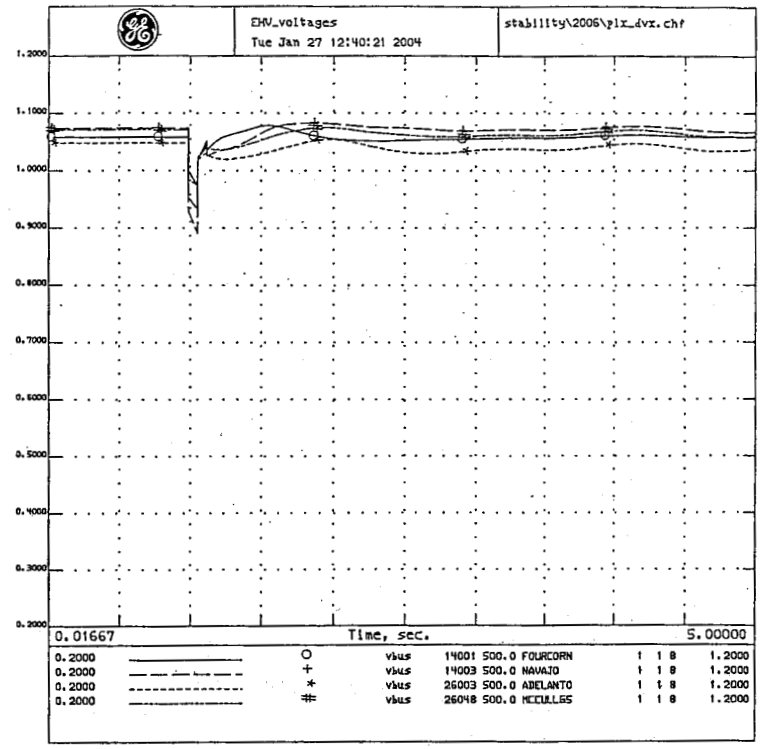

WESTERN ELECTRICITY COORDINATING COUNCIL
PV FLT. w/PV - Devers line out
OCTOBER 28, 2003
PV-DEV STAB; 1/03; T=0 3P FLT PVS00;10% FLT DMPING;FLSH CAPS
NAV-MKP/MKP-YAV,PV-DV/NG;4C CLR FLT W/PV-DEV8C REIN;2006.dyd;WSCC.bat

ALL COMMENTS FROM THE TSS REVIEW ARE ADDED.
MOST RECENT VERSION OF THE MDF USED.

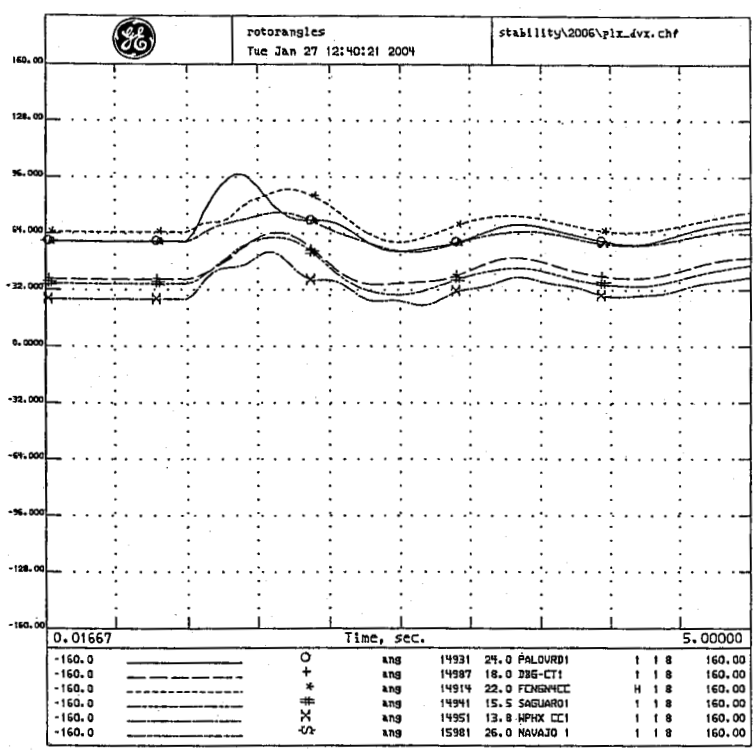

TERN ELECTRICITY COORDINATING COUNCIL
LT. w/PV - Devers line out
BER 28, 2003
-DEV STAB; 1/03; T=0 3P FLT PVS00;10% FLT DMPING;FLSH CAPS
NAV-MKP/MKP-YAV,PV-DV/NG;4C CLR FLT W/PV-DEV8C REIN;2006.dyd;WSCC.bat

ALL COMMENTS FROM THE TSS REVIEW ARE ADDED.
MOST RECENT VERSION OF THE MDF USED.

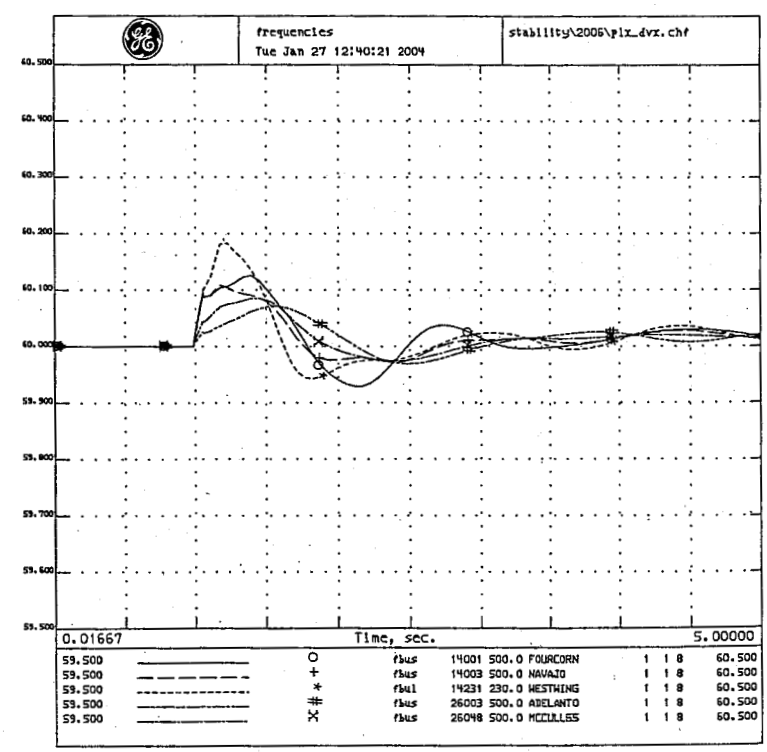

WESTERN ELECTRICITY COORDINATING COUNCIL
PV FLT. w/PV - Devers line out
OCTOBER 28, 2003
PV-DEV STAB; 1/03; T=0 3P FLT PVS00;10% FLT DMPING;FLSH CAPS
NAV-MKP/MKP-YAV,PV-DV/NG;4C CLR FLT W/PV-DEV8C REIN;2006.dyd;WSCC.bat

ALL COMMENTS FROM THE TSS REVIEW ARE ADDED.
MOST RECENT VERSION OF THE MDF USED.

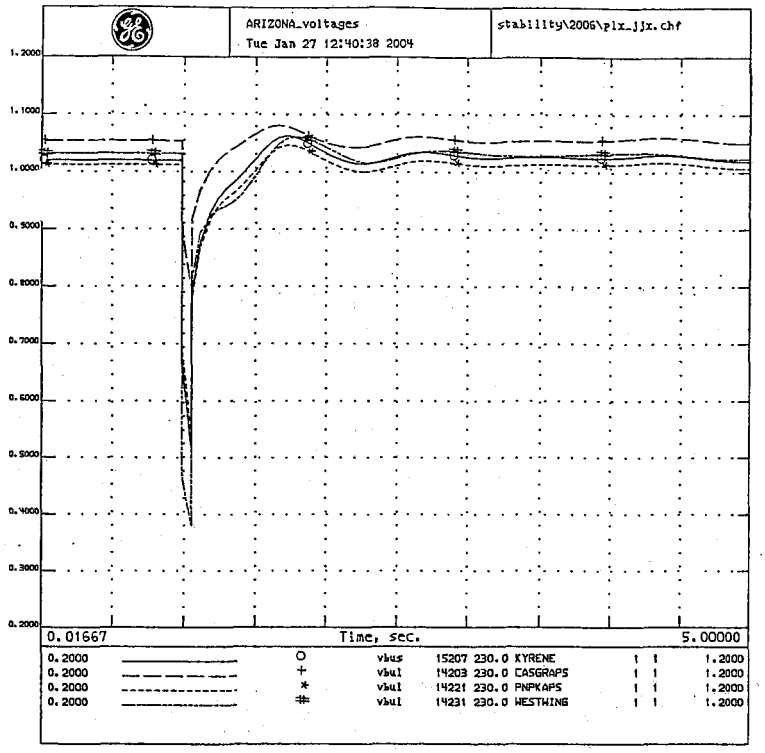

PALO VERDE FLT HASSY-JOJOBA LINE OUT
2006 HS3-SA APPROVED BASE CASE
OCTOBER 28, 2003
HAS-JJ STAB ◆1; 01/03; T=0 3P FLT PV500;10% FLT DMPING;FLSH CAPS
NAV-MKP/MKP-YAV,PV-DV/NG;4C CLR FLT W/HAS-JJ;8C REIN;2006.dyd;WSCC.bpt

ALL COMMENTS FROM THE TSS REVIEW ARE ADDED.
MOST RECENT VERSION OF THE MDF USED.

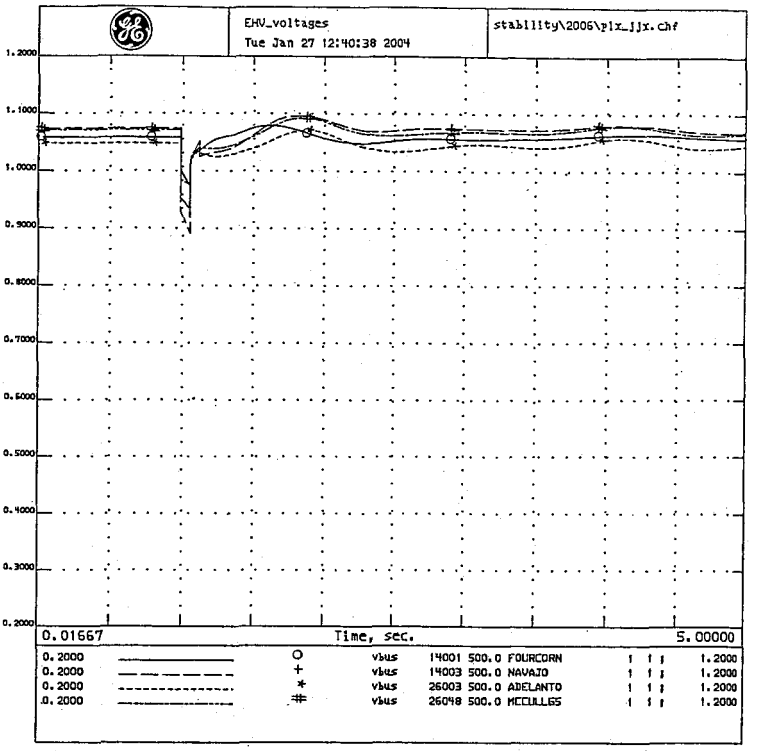

PALO VERDE FLT HASSY-JOJOBA LINE OUT
2006 HS3-SA APPROVED BASE CASE
OCTOBER 28, 2003
HAS-JJ STAB ◆1; 01/03; T=0 3P FLT PV500;10% FLT DMPING;FLSH CAPS
NAV-MKP/MKP-YAV,PV-DV/NG;4C CLR FLT W/HAS-JJ;8C REIN;2006.dyd;WSCC.bpt

ALL COMMENTS FROM THE TSS REVIEW ARE ADDED.
MOST RECENT VERSION OF THE MDF USED.

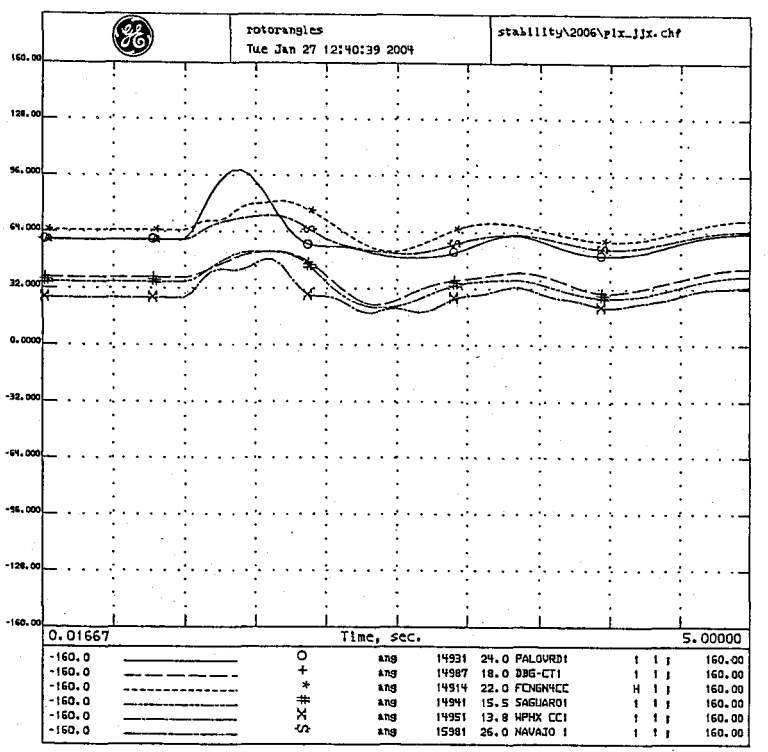

VERDE FLT HASSY-JOJOBA LINE OUT
HS3-SA APPROVED BASE CASE
ER 28, 2003
-JJ STAB ◆1; 01/03; T=0 3P FLT PV500;10% FLT DMPING;FLSH CAPS
NAV-MKP/MKP-YAV,PV-DV/NG;4C CLR FLT W/HAS-JJ;8C REIN;2006.dyd;WSCC.bpt

ALL COMMENTS FROM THE TSS REVIEW ARE ADDED.
MOST RECENT VERSION OF THE MDF USED.

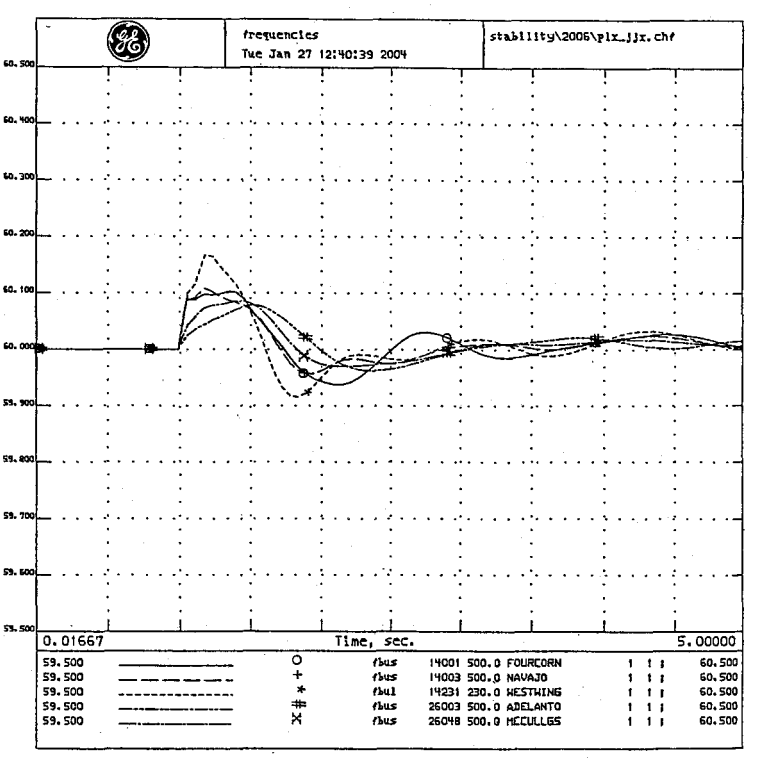

PALO VERDE FLT HASSY-JOJOBA LINE OUT
2006 HS3-SA APPROVED BASE CASE
OCTOBER 28, 2003
HAS-JJ STAB ◆1; 01/03; T=0 3P FLT PV500;10% FLT DMPING;FLSH CAPS
NAV-MKP/MKP-YAV,PV-DV/NG;4C CLR FLT W/HAS-JJ;8C REIN;2006.dyd;WSCC.bpt

ALL COMMENTS FROM THE TSS REVIEW ARE ADDED.
MOST RECENT VERSION OF THE MDF USED.

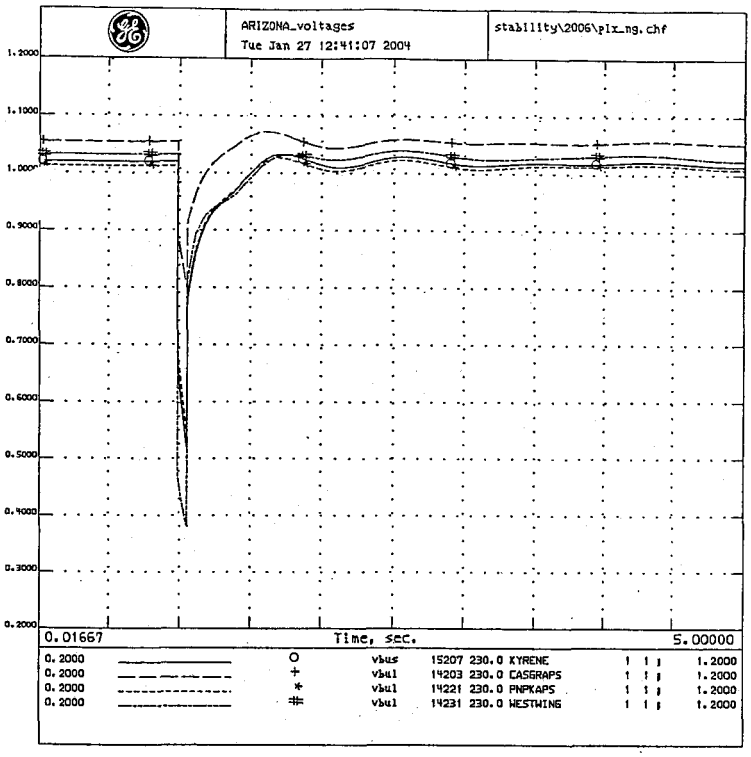

WESTERN ELECTRICITY COORDINATING COUNCIL
PV FLT. w/HASSY-N.GILA line out
OCTOBER 28, 2003
PV-NGILA STAB; 1/03; T=0 3P FLT PV500;10% FLT DMPING;FLSH CAPS
NAV-MKP/MKP-YAV,PV-DV/NG;4C CLR FLT W/PV-NG;8C REIN;2006.dyd;WSCC.bat

ALL COMMENTS FROM THE TSS REVIEW ARE ADDED.
MOST RECENT VERSION OF THE MDF USED.

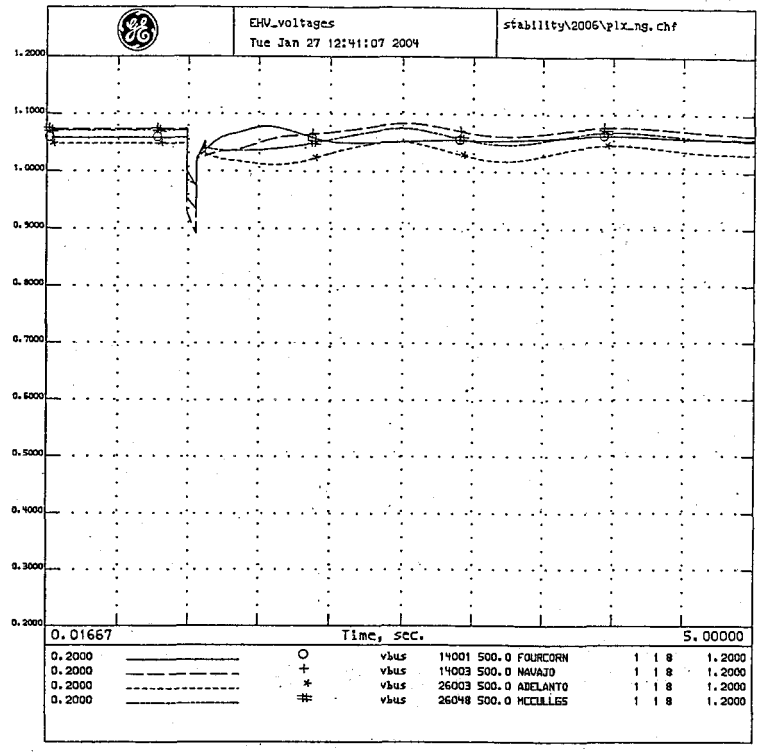

WESTERN ELECTRICITY COORDINATING COUNCIL
PV FLT. w/HASSY-N.GILA line out
OCTOBER 28, 2003
PV-NGILA STAB; 1/03; T=0 3P FLT PV500;10% FLT DMPING;FLSH CAPS
NAV-MKP/MKP-YAV,PV-DV/NG;4C CLR FLT W/PV-NG;8C REIN;2006.dyd;WSCC.bat

ALL COMMENTS FROM THE TSS REVIEW ARE ADDED.
MOST RECENT VERSION OF THE MDF USED.

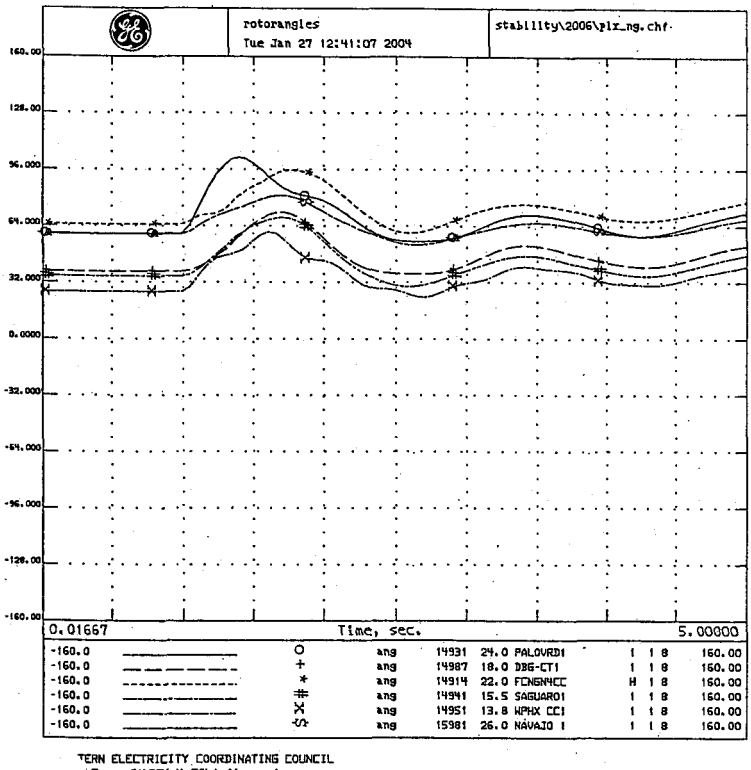

TERN ELECTRICITY COORDINATING COUNCIL
LT. w/HASSY-N.GILA line out
BER 28, 2003
PV-NGILA STAB; 1/03; T=0 3P FLT PV500;10% FLT DMPING;FLSH CAPS
NAV-MKP/MKP-YAV,PV-DV/NG;4C CLR FLT W/PV-NG;8C REIN;2006.dyd;WSCC.bat

ALL COMMENTS FROM THE TSS REVIEW ARE ADDED.
MOST RECENT VERSION OF THE MDF USED.

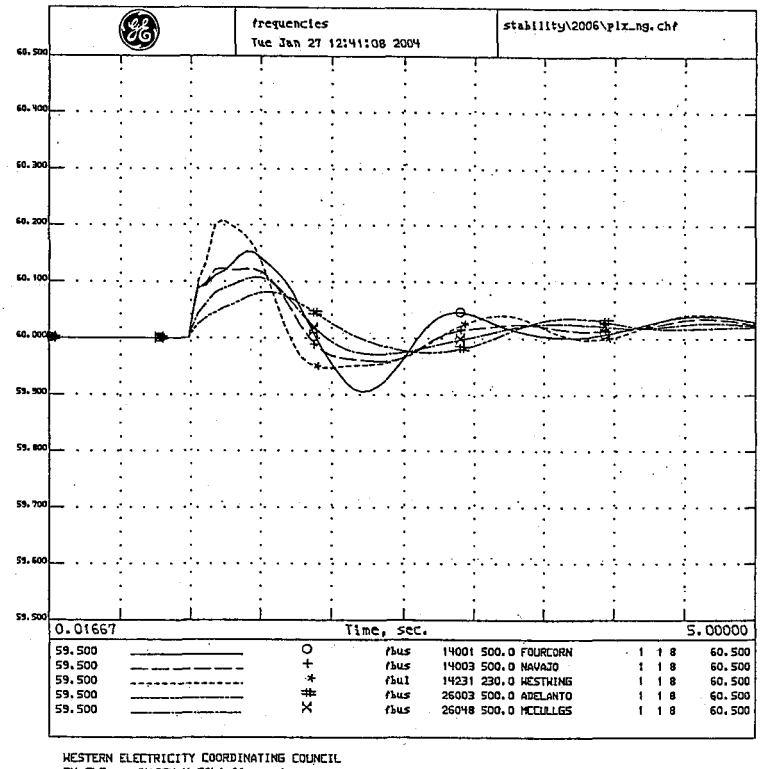

WESTERN ELECTRICITY COORDINATING COUNCIL
PV FLT. w/HASSY-N.GILA line out
OCTOBER 28, 2003
PV-NGILA STAB; 1/03; T=0 3P FLT PV500;10% FLT DMPING;FLSH CAPS
NAV-MKP/MKP-YAV,PV-DV/NG;4C CLR FLT W/PV-NG;8C REIN;2006.dyd;WSCC.bat

ALL COMMENTS FROM THE TSS REVIEW ARE ADDED.
MOST RECENT VERSION OF THE MDF USED.

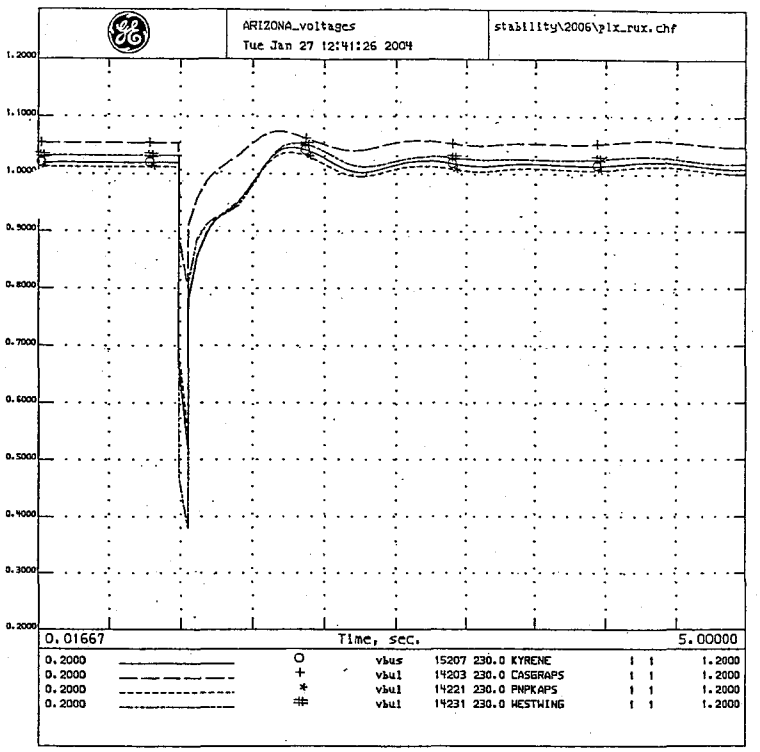

PALO VERDE FLT PV-RUDD LINE OUT
2006 HS3-SA APPROVED BASE CASE
OCTOBER 28, 2003
PV-RUDD STAB #1; 01/03; T=0 3P FLT PV500;10% FLT DMPING;FLSH CAPS
NAV-MKP/MKP-YAV,PV-DV/NG;4C CLR FLT W/PV-RD;8C REIN;2006.dyd;WSCC.bpt

ALL COMMENTS FROM THE TSS REVIEW ARE ADDED.
MOST RECENT VERSION OF THE MDF USED.

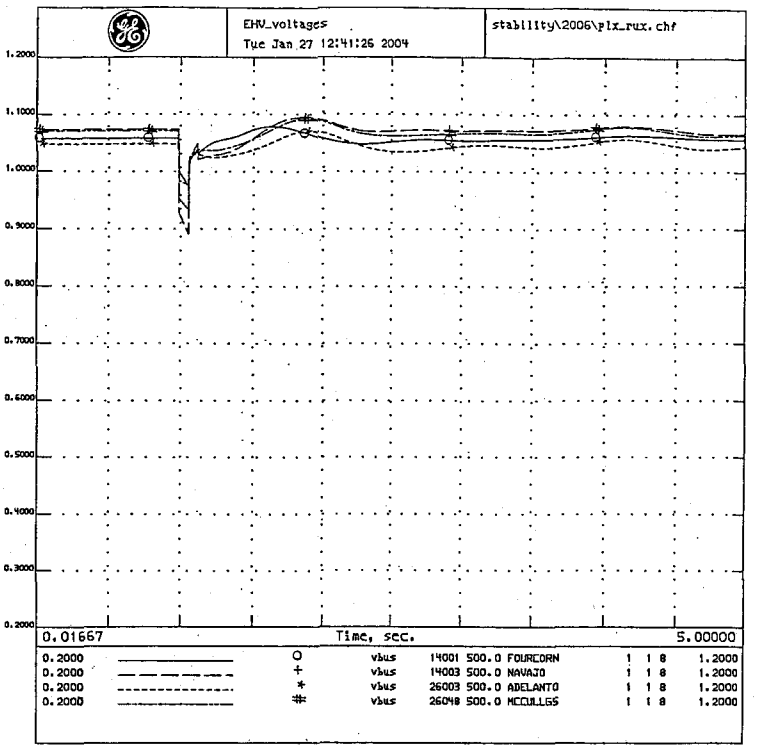

PALO VERDE FLT PV-RUDD LINE OUT
2006 HS3-SA APPROVED BASE CASE
OCTOBER 28, 2003
PV-RUDD STAB #1; 01/03; T=0 3P FLT PV500;10% FLT DMPING;FLSH CAPS
NAV-MKP/MKP-YAV,PV-DV/NG;4C CLR FLT W/PV-RD;8C REIN;2006.dyd;WSCC.bpt

ALL COMMENTS FROM THE TSS REVIEW ARE ADDED.
MOST RECENT VERSION OF THE MDF USED.

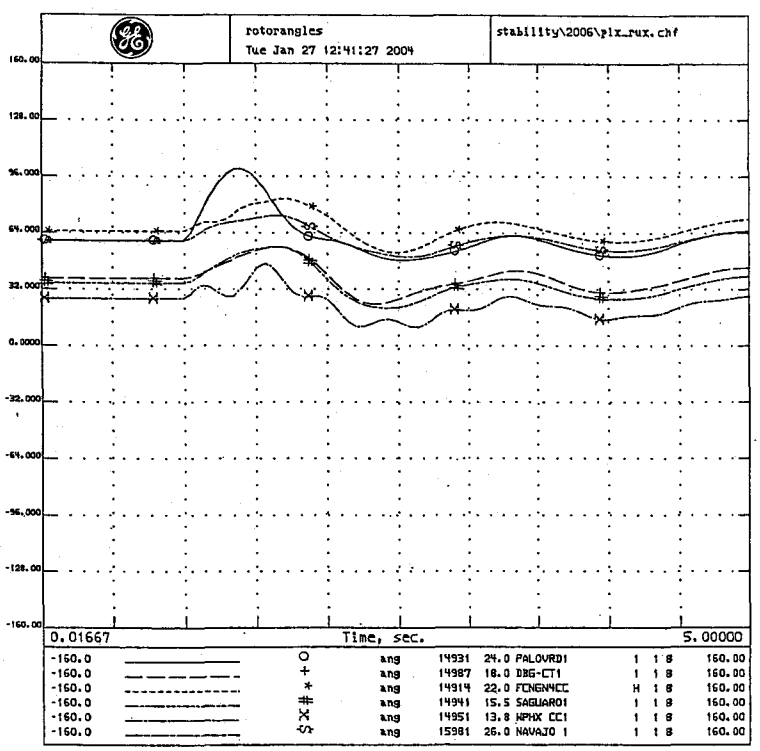

PALO VERDE FLT PV-RUDD LINE OUT
2006 HS3-SA APPROVED BASE CASE
OCTOBER 28, 2003
PV-RUDD STAB #1; 01/03; T=0 3P FLT PV500;10% FLT DMPING;FLSH CAPS
NAV-MKP/MKP-YAV,PV-DV/NG;4C CLR FLT W/PV-RD;8C REIN;2006.dyd;WSCC.bpt

ALL COMMENTS FROM THE TSS REVIEW ARE ADDED.
MOST RECENT VERSION OF THE MDF USED.

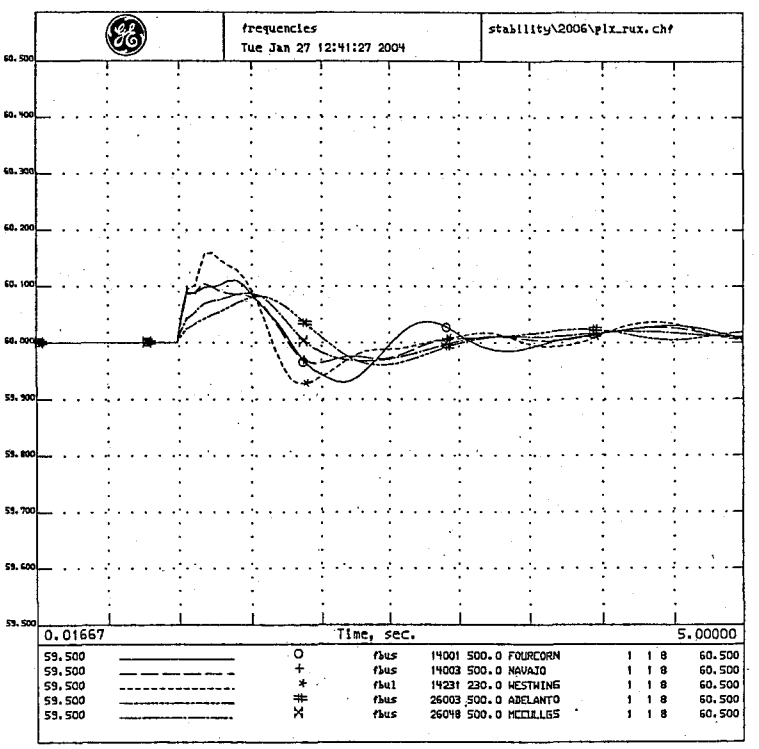

PALO VERDE FLT PV-RUDD LINE OUT
2006 HS3-SA APPROVED BASE CASE
OCTOBER 28, 2003
PV-RUDD STAB #1; 01/03; T=0 3P FLT PV500;10% FLT DMPING;FLSH CAPS
NAV-MKP/MKP-YAV,PV-DV/NG;4C CLR FLT W/PV-RD;8C REIN;2006.dyd;WSCC.bpt

ALL COMMENTS FROM THE TSS REVIEW ARE ADDED.
MOST RECENT VERSION OF THE MDF USED.

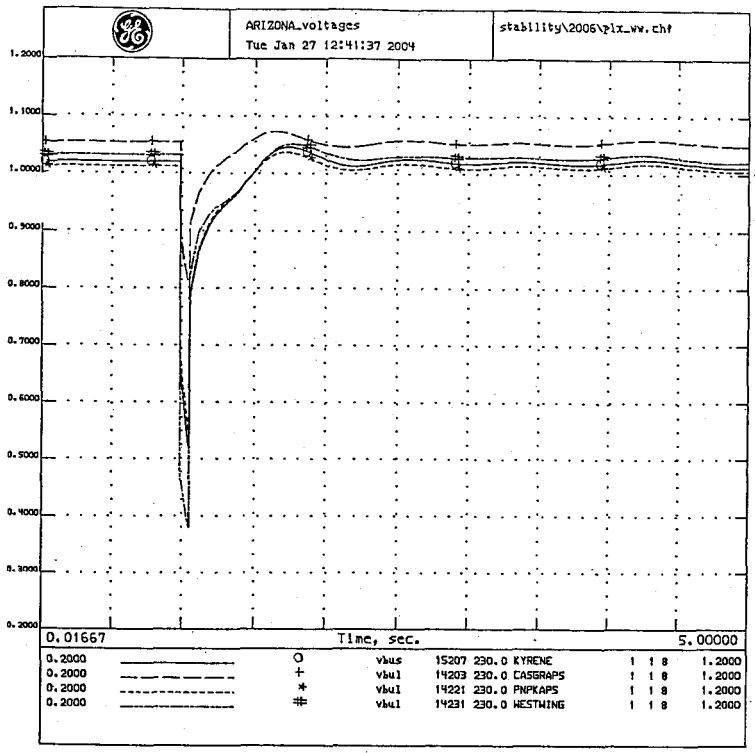

WESTERN ELECTRICITY COORDINATING COUNCIL
PV FLT w/PV-WW line out
OCTOBER 28, 2003
PV-WWG STAB; 1/03; T=0 3P FLT PV500;10% FLT DMPING;FLSH CAPS
NAV-MKP/MKP-YAV,PV-DV/NG;4C CLR FLT W/PV-WW;8C REIN;2006.dyd;WSCC.bat

ALL COMMENTS FROM THE TSS REVIEW ARE ADDED.
MOST RECENT VERSION OF THE MDF USED.

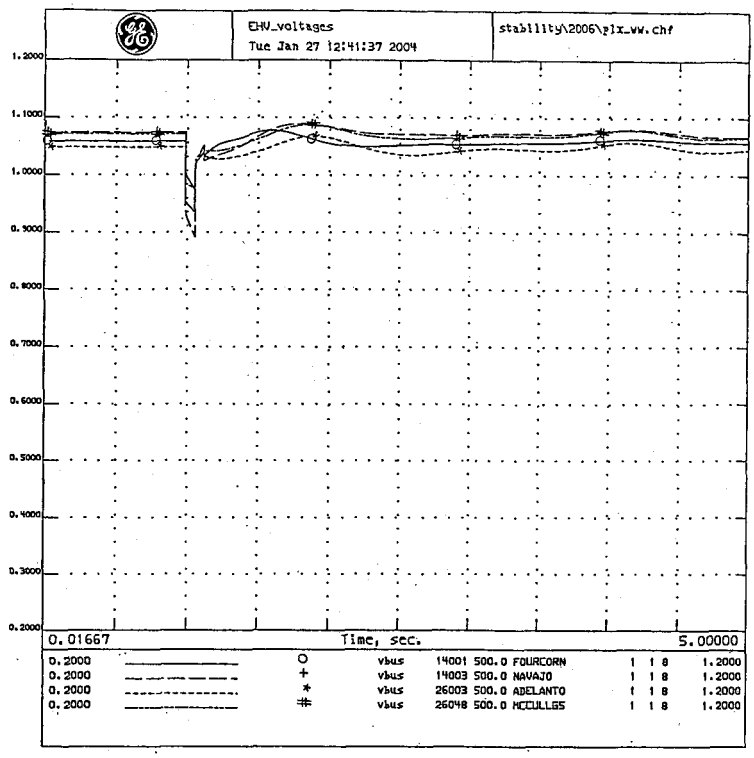

WESTERN ELECTRICITY COORDINATING COUNCIL
PV FLT w/PV-WW line out
OCTOBER 28, 2003
PV-WWG STAB; 1/03; T=0 3P FLT PV500;10% FLT DMPING;FLSH CAPS
NAV-MKP/MKP-YAV,PV-DV/NG;4C CLR FLT W/PV-WW;8C REIN;2006.dyd;WSCC.bat

ALL COMMENTS FROM THE TSS REVIEW ARE ADDED.
MOST RECENT VERSION OF THE MDF USED.

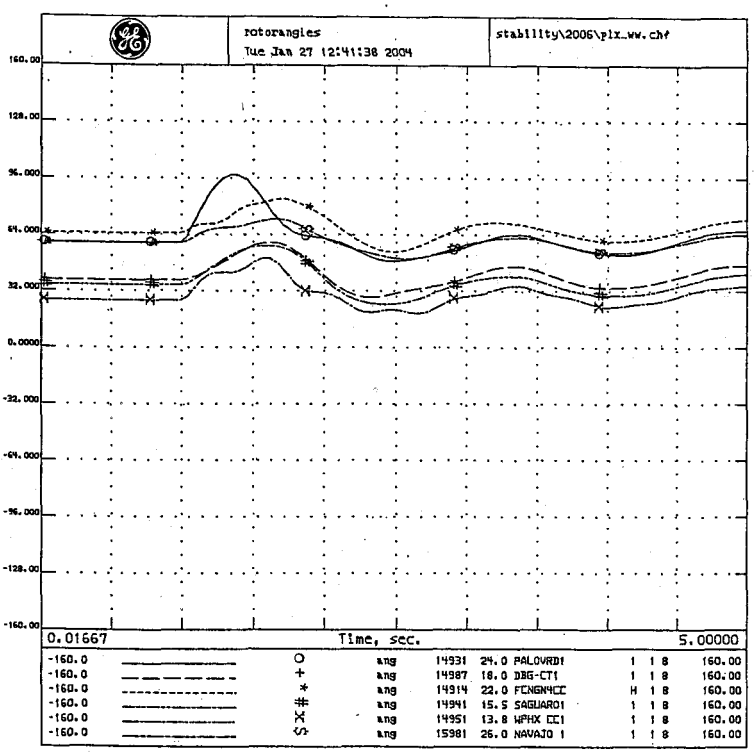

WESTERN ELECTRICITY COORDINATING COUNCIL
PV FLT w/PV-WW line out
OCTOBER 28, 2003
PV-WWG STAB; 1/03; T=0 3P FLT PV500;10% FLT DMPING;FLSH CAPS
NAV-MKP/MKP-YAV,PV-DV/NG;4C CLR FLT W/PV-WW;8C REIN;2006.dyd;WSCC.bat

ALL COMMENTS FROM THE TSS REVIEW ARE ADDED.
MOST RECENT VERSION OF THE MDF USED.

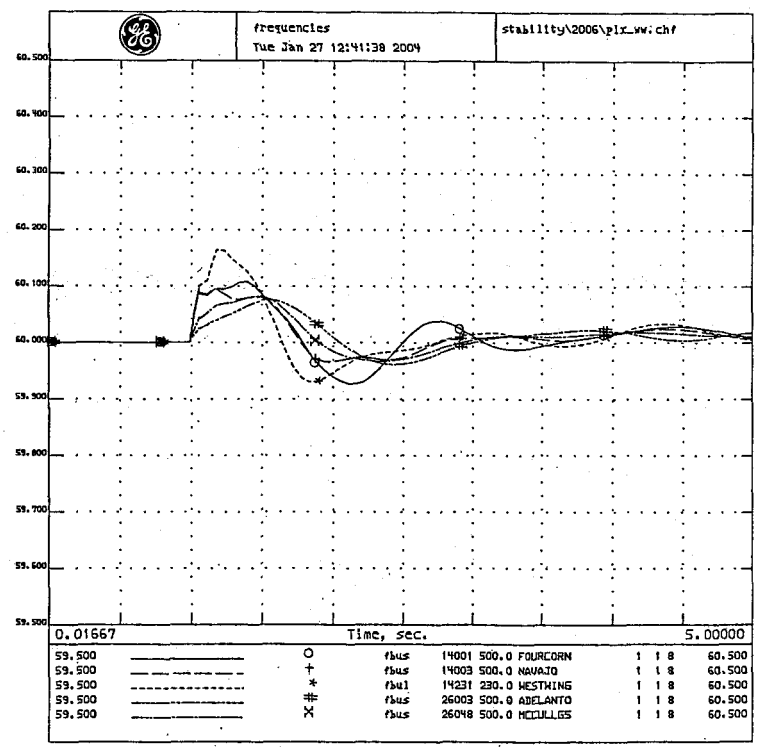

WESTERN ELECTRICITY COORDINATING COUNCIL
PV FLT w/PV-WW line out
OCTOBER 28, 2003
PV-WWG STAB; 1/03; T=0 3P FLT PV500;10% FLT DMPING;FLSH CAPS
NAV-MKP/MKP-YAV,PV-DV/NG;4C CLR FLT W/PV-WW;8C REIN;2006.dyd;WSCC.bat

ALL COMMENTS FROM THE TSS REVIEW ARE ADDED.
MOST RECENT VERSION OF THE MDF USED.

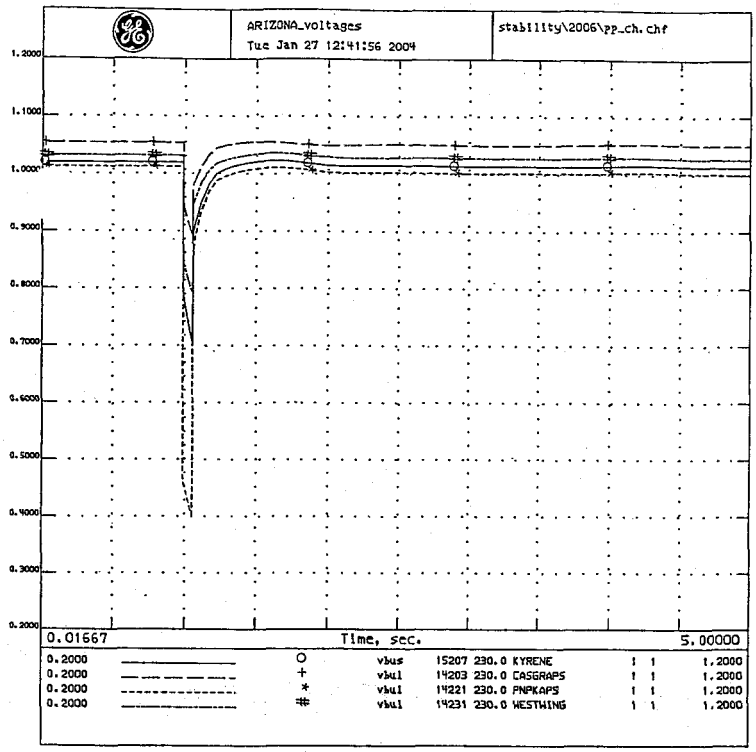

PNPK 345KV FLT PP-CH LINE OUT
2006 HS3-SA APPROVED BASE CASE
OCTOBER 28, 2003
PP-CH STAB #1; 01/03; T=0 3P FLT PP345;
4C CLR FLT W/PP-CH;2006.dyd;WSCC.bpt

ALL COMMENTS FROM THE TSS REVIEW ARE ADDED.
MOST RECENT VERSION OF THE MDF USED.

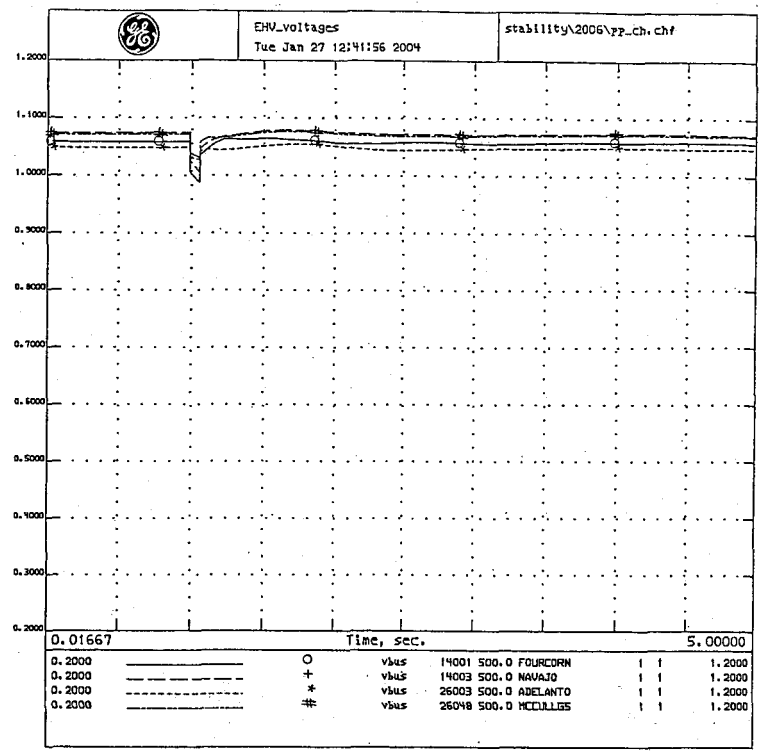

PNPK 345KV FLT PP-CH LINE OUT
2006 HS3-SA APPROVED BASE CASE
OCTOBER 28, 2003
PP-CH STAB #1; 01/03; T=0 3P FLT PP345;
4C CLR FLT W/PP-CH;2006.dyd;WSCC.bpt

ALL COMMENTS FROM THE TSS REVIEW ARE ADDED.
MOST RECENT VERSION OF THE MDF USED.

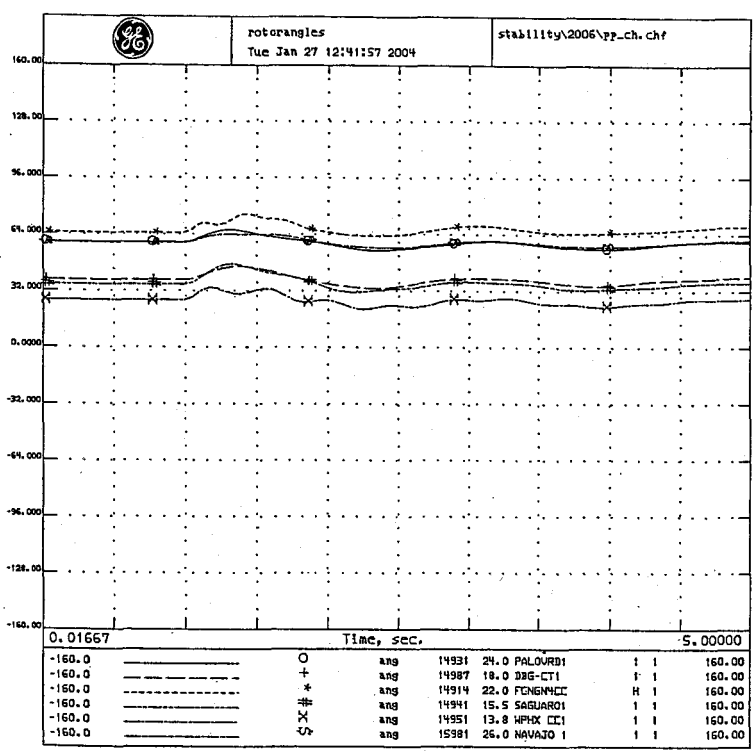

345KV FLT PP-CH LINE OUT
HS3-SA APPROVED BASE CASE
ER 28, 2003
CH STAB #1; 01/03; T=0 3P FLT PP345;
4C CLR FLT W/PP-CH;2006.dyd;WSCC.bpt

ALL COMMENTS FROM THE TSS REVIEW ARE ADDED.
MOST RECENT VERSION OF THE MDF USED.

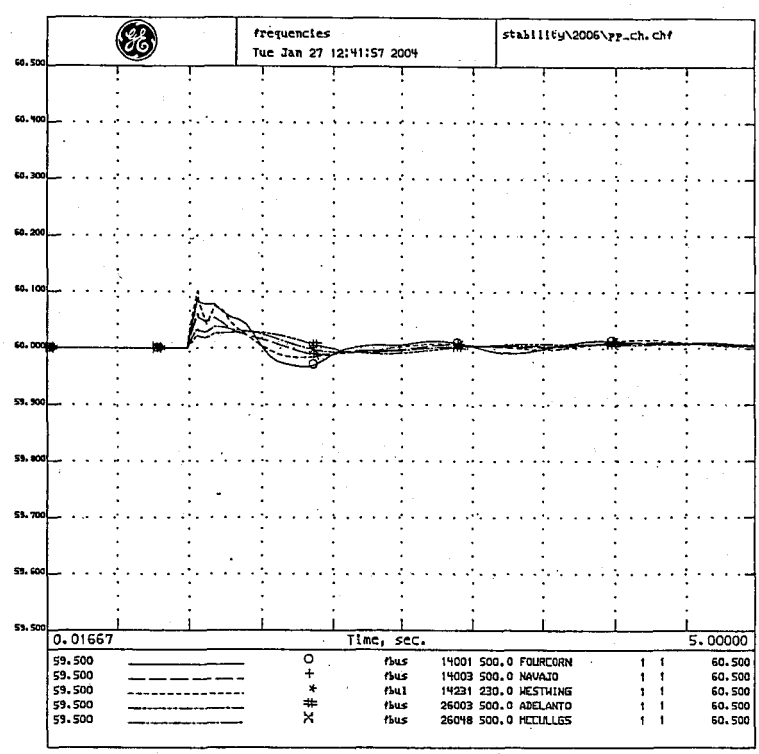

PNPK 345KV FLT PP-CH LINE OUT
2006 HS3-SA APPROVED BASE CASE
OCTOBER 28, 2003
PP-CH STAB #1; 01/03; T=0 3P FLT PP345;
4C CLR FLT W/PP-CH;2006.dyd;WSCC.bpt

ALL COMMENTS FROM THE TSS REVIEW ARE ADDED.
MOST RECENT VERSION OF THE MDF USED.

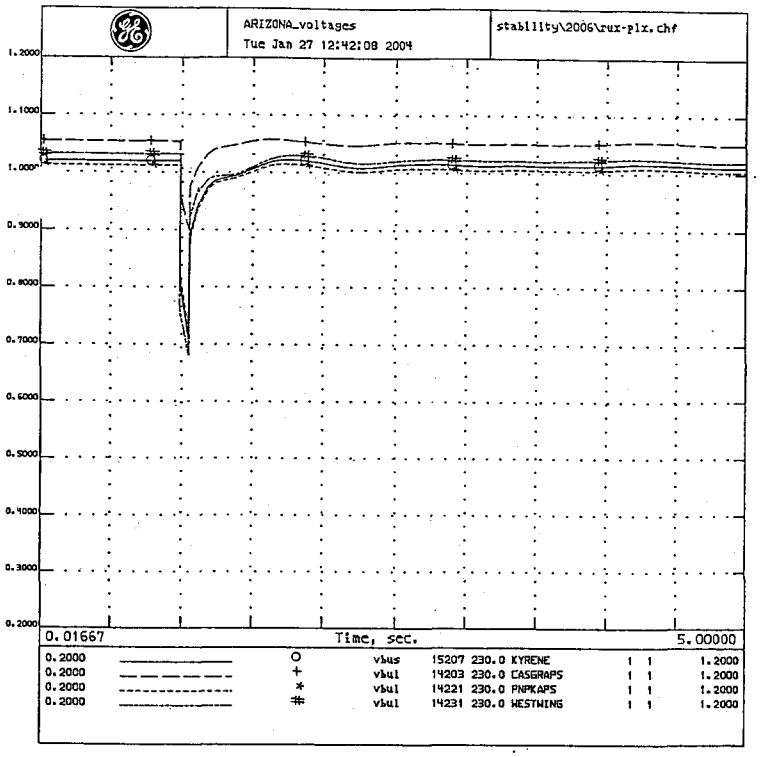

RUDD FLT RUDD-PV LINE OUT
2006 HS3-SA APPROVED BASE CASE
OCTOBER 28, 2003
PV-RUDD STAB #1; 01/03; T=0 3P FLT RUDD500;10% FLT DMPING;FLSH CAPS
NAV-MKP/MKP-YAV,PV-DV/NG;4C CLR FLT W/PV-RUDD;8C REIN;2006.dyd;WSCC.bpt

ALL COMMENTS FROM THE TSS REVIEW ARE ADDED.
MOST RECENT VERSION OF THE MDF USED.

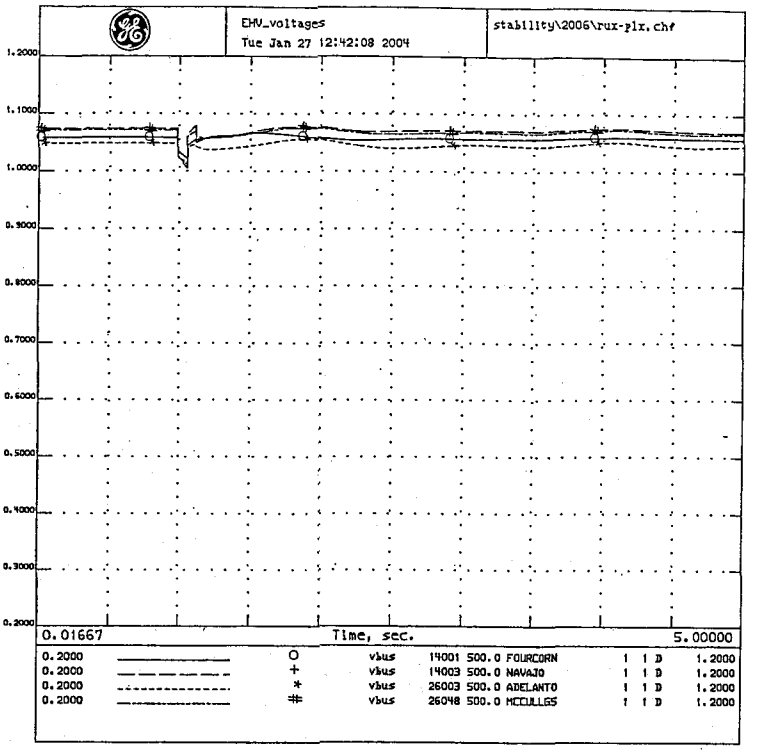

RUDD FLT RUDD-PV LINE OUT
2006 HS3-SA APPROVED BASE CASE
OCTOBER 28, 2003
PV-RUDD STAB #1; 01/03; T=0 3P FLT RUDD500;10% FLT DMPING;FLSH CAPS
NAV-MKP/MKP-YAV,PV-DV/NG;4C CLR FLT W/PV-RUDD;8C REIN;2006.dyd;WSCC.bpt

ALL COMMENTS FROM THE TSS REVIEW ARE ADDED.
MOST RECENT VERSION OF THE MDF USED.

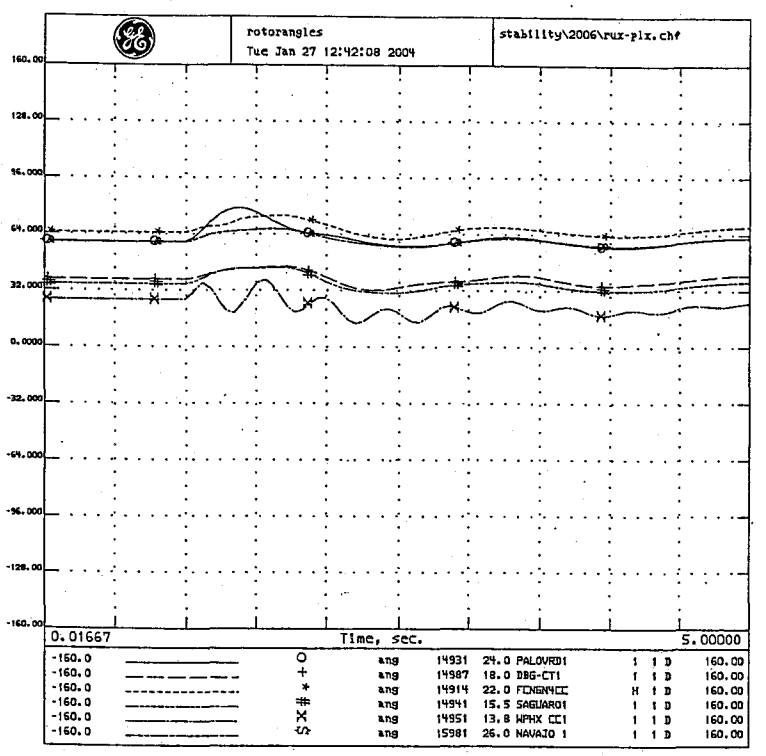

FLT RUDD-PV LINE OUT
HS3-SA APPROVED BASE CASE
JER 28, 2003
-RUDD STAB #1; 01/03; T=0 3P FLT RUDD500;10% FLT DMPING;FLSH CAPS
NAV-MKP/MKP-YAV,PV-DV/NG;4C CLR FLT W/PV-RUDD;8C REIN;2006.dyd;WSCC.bpt

ALL COMMENTS FROM THE TSS REVIEW ARE ADDED.
MOST RECENT VERSION OF THE MDF USED.

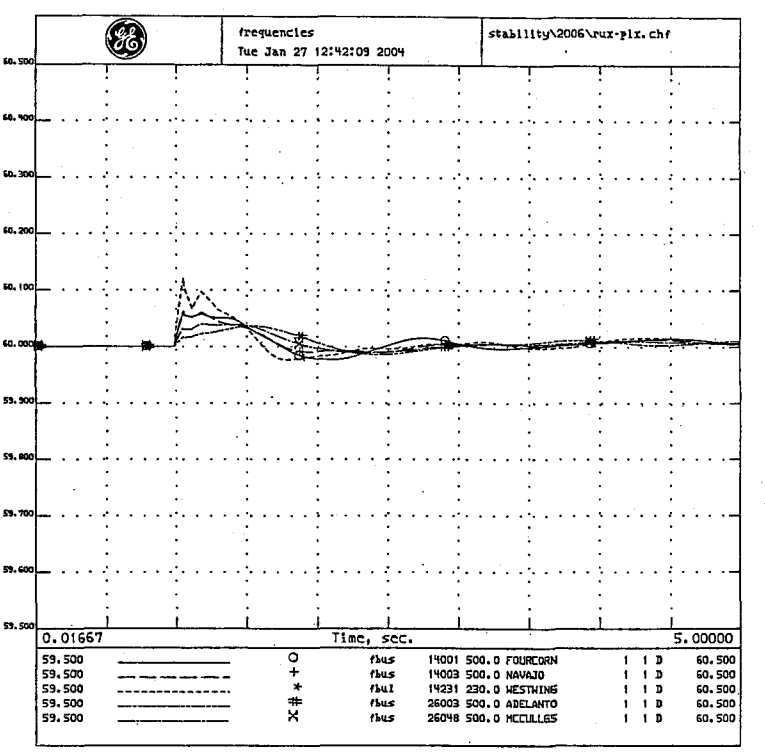

RUDD FLT RUDD-PV LINE OUT
2006 HS3-SA APPROVED BASE CASE
OCTOBER 28, 2003
PV-RUDD STAB #1; 01/03; T=0 3P FLT RUDD500;10% FLT DMPING;FLSH CAPS
NAV-MKP/MKP-YAV,PV-DV/NG;4C CLR FLT W/PV-RUDD;8C REIN;2006.dyd;WSCC.bpt

ALL COMMENTS FROM THE TSS REVIEW ARE ADDED.
MOST RECENT VERSION OF THE MDF USED.

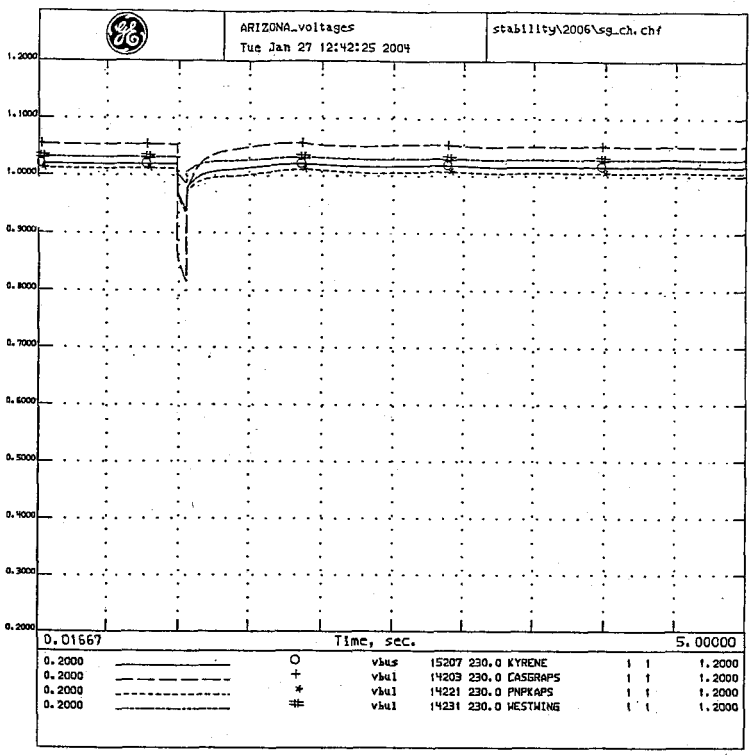

SAGUARO FLT SAG-CH LINE OUT
2006 HS3-SA APPROVED BASE CASE
OCTOBER 28, 2003
SAG-CH STAB #1; 01/03; T=0 3P FLT SAG500;
4C CLR FLT W/SAG-CH;2006.dyd;WSCC.bpt

ALL COMMENTS FROM THE TSS REVIEW ARE ADDED.
MOST RECENT VERSION OF THE MDF USED.

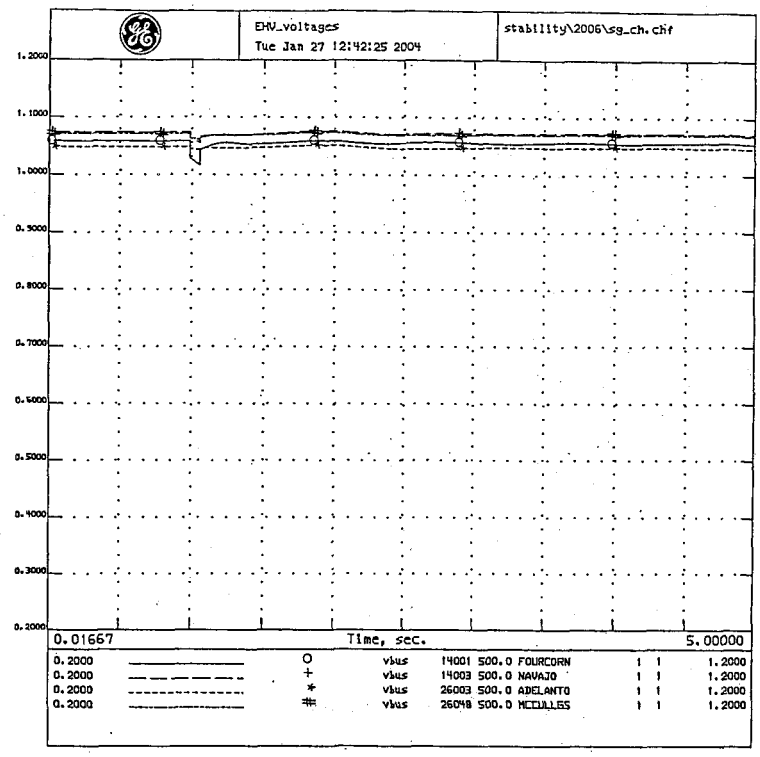

SAGUARO FLT SAG-CH LINE OUT
2006 HS3-SA APPROVED BASE CASE
OCTOBER 28, 2003
SAG-CH STAB #1; 01/03; T=0 3P FLT SAG500;
4C CLR FLT W/SAG-CH;2006.dyd;WSCC.bpt

ALL COMMENTS FROM THE TSS REVIEW ARE ADDED.
MOST RECENT VERSION OF THE MDF USED.

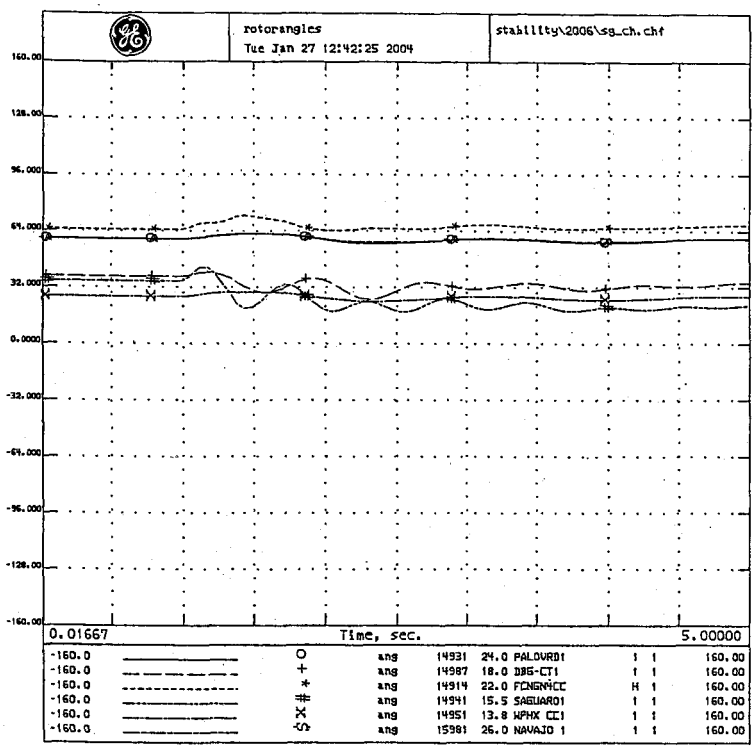

SAGUARO FLT SAG-CH LINE OUT
2006 HS3-SA APPROVED BASE CASE
OCTOBER 28, 2003
SAG-CH STAB #1; 01/03; T=0 3P FLT SAG500;
4C CLR FLT W/SAG-CH;2006.dyd;WSCC.bpt

ALL COMMENTS FROM THE TSS REVIEW ARE ADDED.
MOST RECENT VERSION OF THE MDF USED.

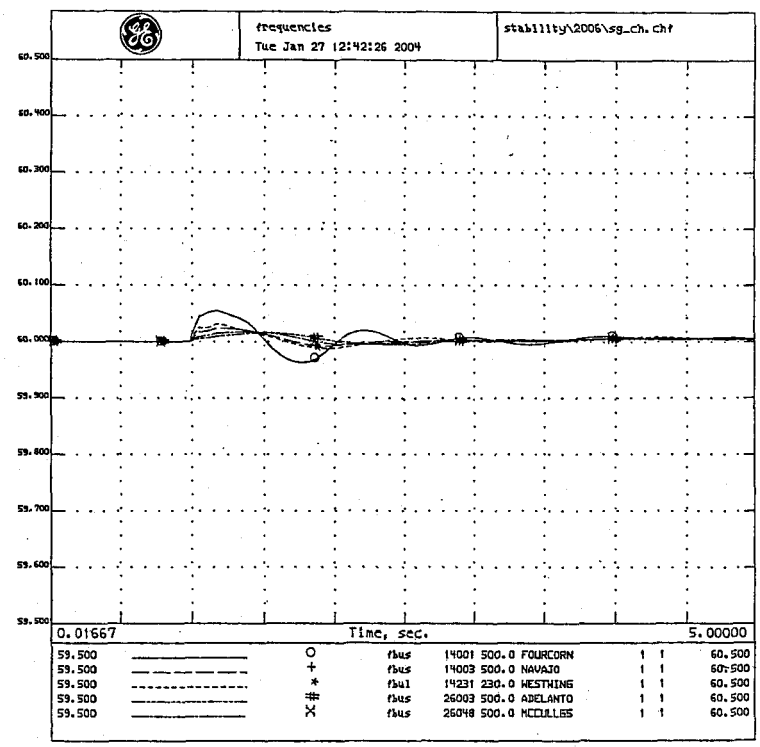

SAGUARO FLT SAG-CH LINE OUT
2006 HS3-SA APPROVED BASE CASE
OCTOBER 28, 2003
SAG-CH STAB #1; 01/03; T=0 3P FLT SAG500;
4C CLR FLT W/SAG-CH;2006.dyd;WSCC.bpt

ALL COMMENTS FROM THE TSS REVIEW ARE ADDED.
MOST RECENT VERSION OF THE MDF USED.

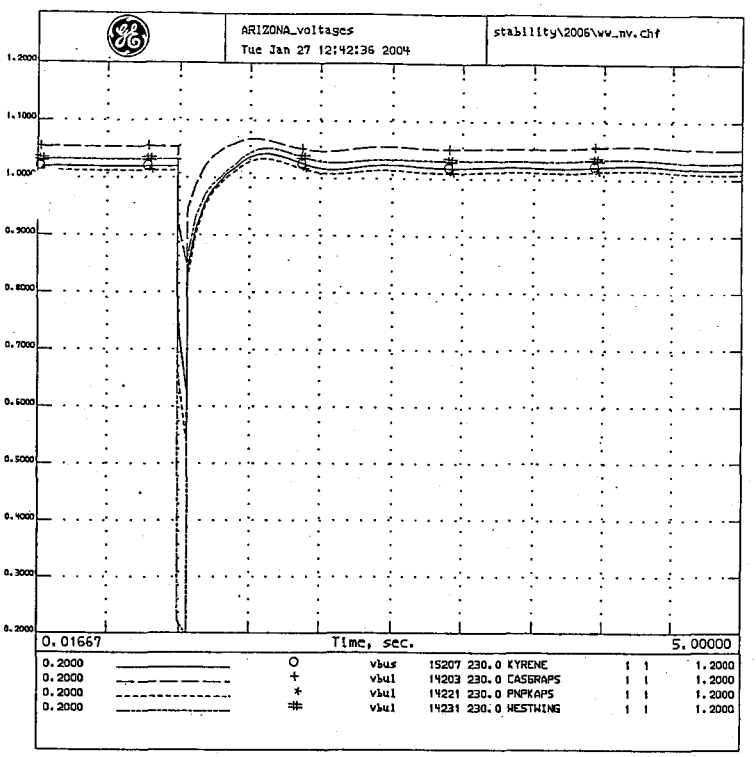

WESTERN ELECTRICITY COORDINATING COUNCIL
WW. FLT. WW-Nav line out
OCTOBER 28, 2003
WWG-NAV STAB; 1/03; T=0 3P FLT WWG500;FLSH CAPS MKP-YAV/YAV-WWG,
NAV-MKP/WWG;4C CLR FLT W/WWG-NAV;8C REIN;2006.dyd WSCC.bat

ALL COMMENTS FROM THE TSS REVIEW ARE ADDED.
MOST RECENT VERSION OF THE MDF USED.

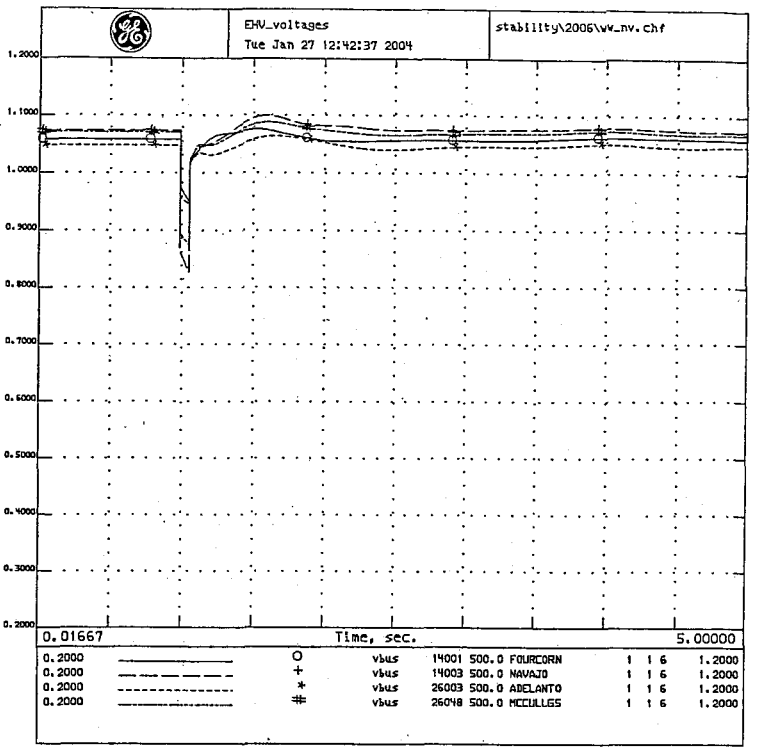

WESTERN ELECTRICITY COORDINATING COUNCIL
WW. FLT. WW-Nav line out
OCTOBER 28, 2003
WWG-NAV STAB; 1/03; T=0 3P FLT WWG500;FLSH CAPS MKP-YAV/YAV-WWG,
NAV-MKP/WWG;4C CLR FLT W/WWG-NAV;8C REIN;2006.dyd WSCC.bat

ALL COMMENTS FROM THE TSS REVIEW ARE ADDED.
MOST RECENT VERSION OF THE MDF USED.

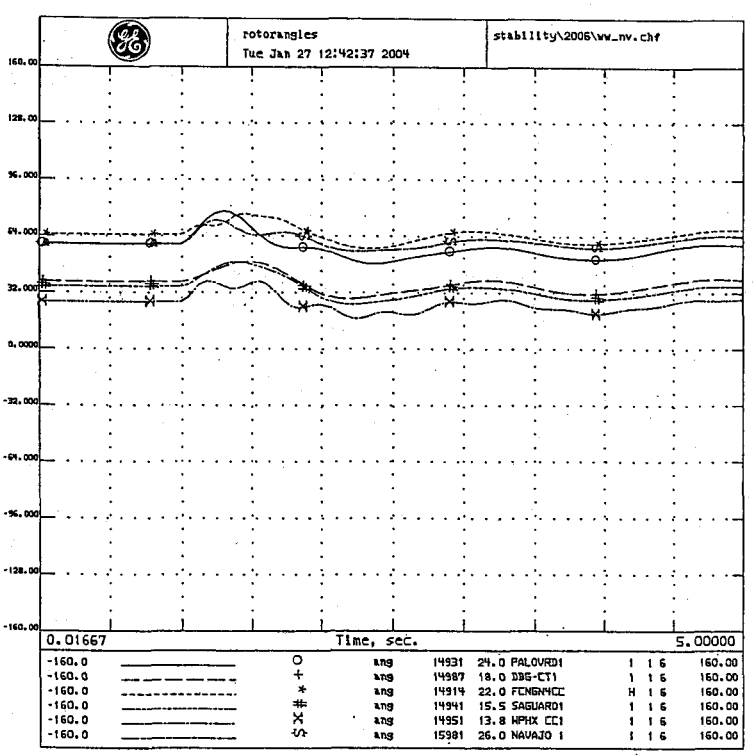

ERN ELECTRICITY COORDINATING COUNCIL
LT. WW-Nav line out
BER 28, 2003
WWG-NAV STAB; 1/03; T=0 3P FLT WWG500;FLSH CAPS MKP-YAV/YAV-WWG,
NAV-MKP/WWG;4C CLR FLT W/WWG-NAV;8C REIN;2006.dyd WSCC.bat

ALL COMMENTS FROM THE TSS REVIEW ARE ADDED.
MOST RECENT VERSION OF THE MDF USED.

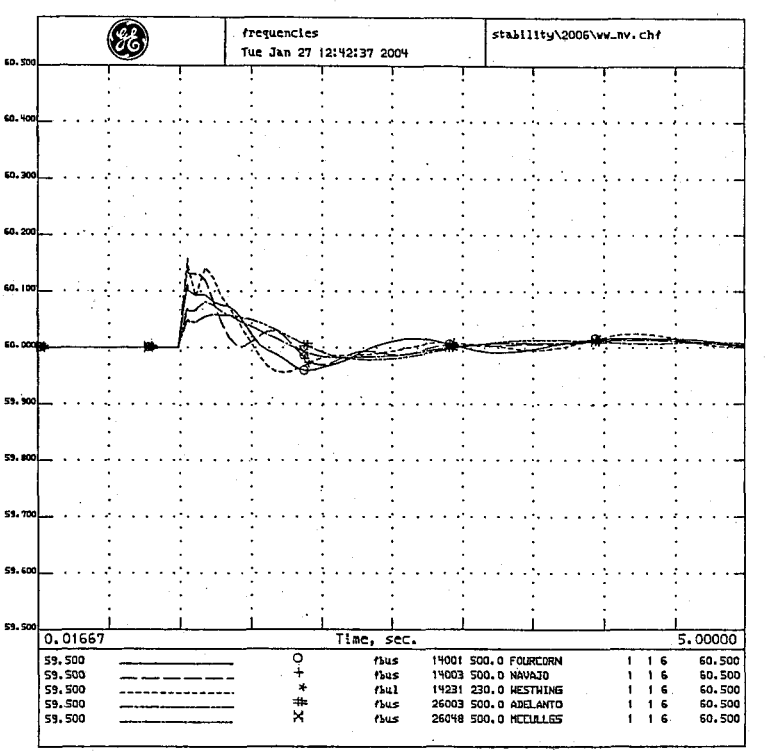

WESTERN ELECTRICITY COORDINATING COUNCIL
WW. FLT. WW-Nav line out
OCTOBER 28, 2003
WWG-NAV STAB; 1/03; T=0 3P FLT WWG500;FLSH CAPS MKP-YAV/YAV-WWG,
NAV-MKP/WWG;4C CLR FLT W/WWG-NAV;8C REIN;2006.dyd WSCC.bat

ALL COMMENTS FROM THE TSS REVIEW ARE ADDED.
MOST RECENT VERSION OF THE MDF USED.

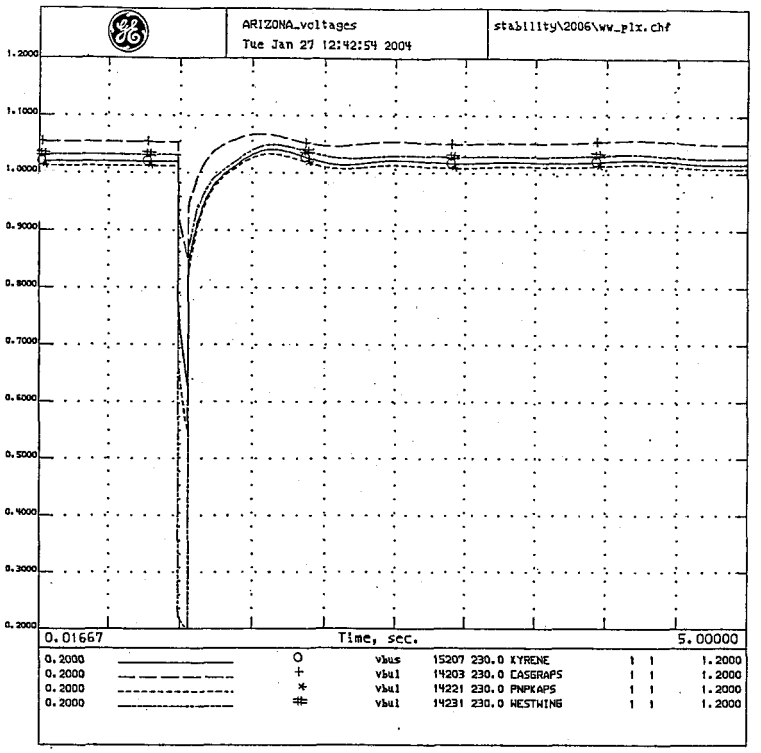

WESTERN ELECTRICITY COORDINATING COUNCIL
WW. FLT. WW-PV line out
OCTOBER 28, 2003
WWG-YAV STAB; 1/03; T=0 3P FLT WWG500;FLSH CAPS MKP-YAV/YAV-WWG,
NAV-MKP/WWG;4C CLR FLT W/WWG-PAL;8C REIN;2006.dyd WSCC.bat

ALL COMMENTS FROM THE TSS REVIEW ARE ADDED.
MOST RECENT VERSION OF THE MDF USED.

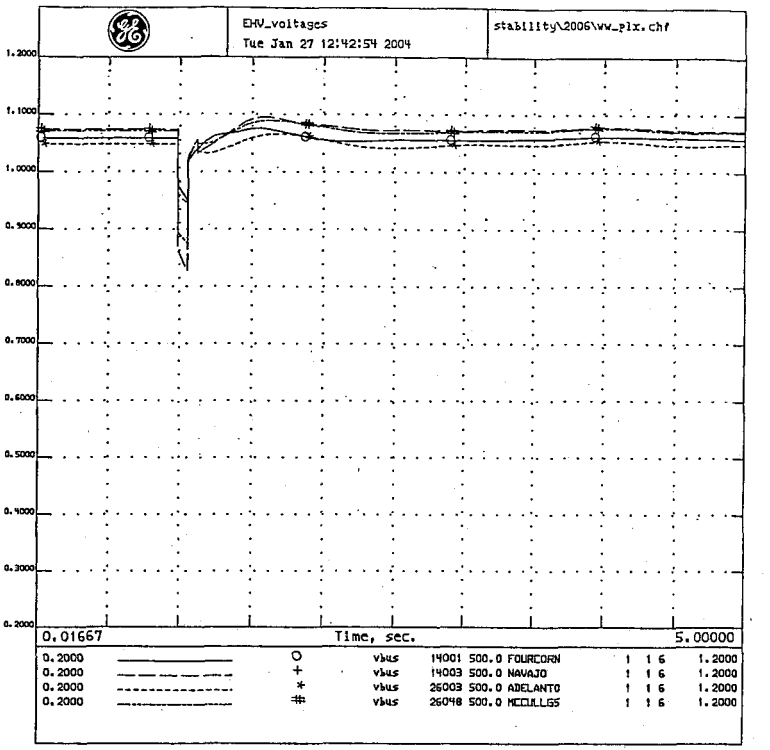

WESTERN ELECTRICITY COORDINATING COUNCIL
WW. FLT. WW-PV line out
OCTOBER 28, 2003
WWG-YAV STAB; 1/03; T=0 3P FLT WWG500;FLSH CAPS MKP-YAV/YAV-WWG,
NAV-MKP/WWG;4C CLR FLT W/WWG-PAL;8C REIN;2006.dyd WSCC.bat

ALL COMMENTS FROM THE TSS REVIEW ARE ADDED.
MOST RECENT VERSION OF THE MDF USED.

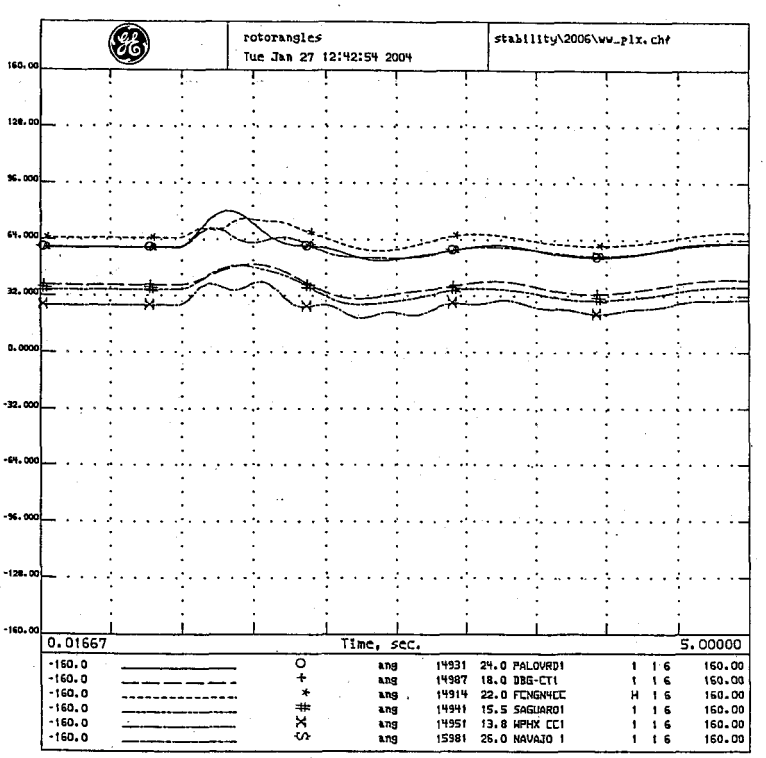

TERN ELECTRICITY COORDINATING COUNCIL
LT. WW-PV line out
ER 28, 2003
...-YAV STAB; 1/03; T=0 3P FLT WWG500;FLSH CAPS MKP-YAV/YAV-WWG,
NAV-MKP/WWG;4C CLR FLT W/WWG-PAL;8C REIN;2006.dyd WSCC.bat

ALL COMMENTS FROM THE TSS REVIEW ARE ADDED.
MOST RECENT VERSION OF THE MDF USED.

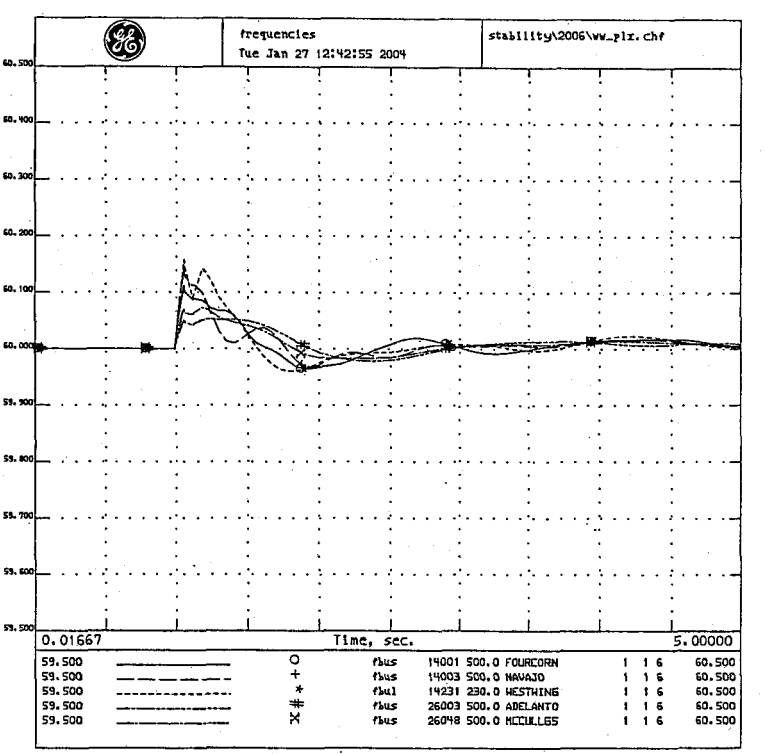

WESTERN ELECTRICITY COORDINATING COUNCIL
WW. FLT. WW-PV line out
OCTOBER 28, 2003
WWG-YAV STAB; 1/03; T=0 3P FLT WWG500;FLSH CAPS MKP-YAV/YAV-WWG,
NAV-MKP/WWG;4C CLR FLT W/WWG-PAL;8C REIN;2006.dyd WSCC.bat

ALL COMMENTS FROM THE TSS REVIEW ARE ADDED.
MOST RECENT VERSION OF THE MDF USED.

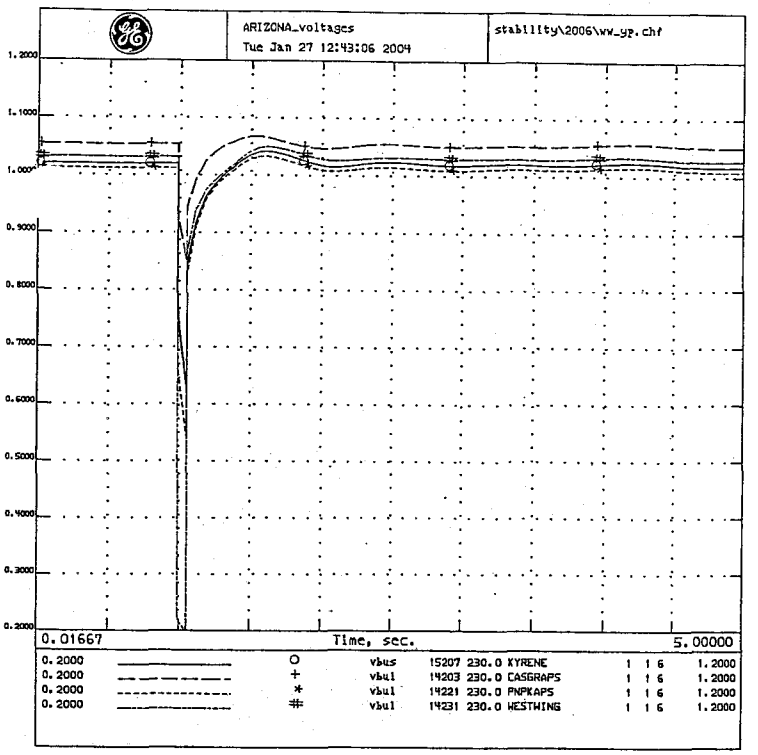

WESTERN ELECTRICITY COORDINATING COUNCIL
WW. FLT. WW-YAV line out
OCTOBER 28, 2003
WWG-YAV STAB; 1/03; T=0 3P FLT WWG500;FLSH CAPS MKP-YAV/YAV-WWG,
NAV-MKP/WWG;4C CLR FLT W/WWG-YAV;8C REIN;2006.dyd WSCC.bat

ALL COMMENTS FROM THE TSS REVIEW ARE ADDED.
MOST RECENT VERSION OF THE MDF USED.

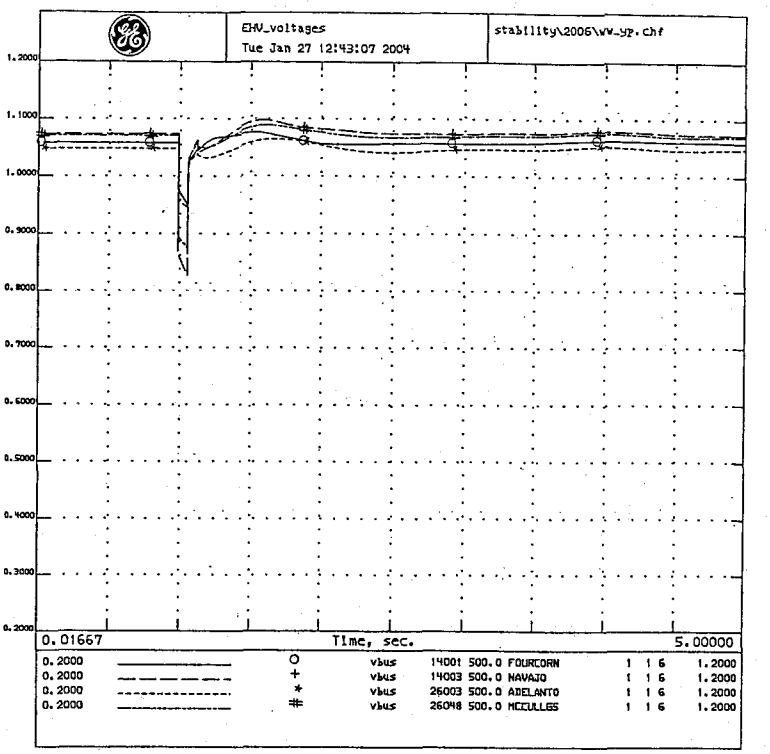

WESTERN ELECTRICITY COORDINATING COUNCIL
WW. FLT. WW-YAV line out
OCTOBER 28, 2003
WWG-YAV STAB; 1/03; T=0 3P FLT WWG500;FLSH CAPS MKP-YAV/YAV-WWG,
NAV-MKP/WWG;4C CLR FLT W/WWG-YAV;8C REIN;2006.dyd WSCC.bat

ALL COMMENTS FROM THE TSS REVIEW ARE ADDED.
MOST RECENT VERSION OF THE MDF USED.

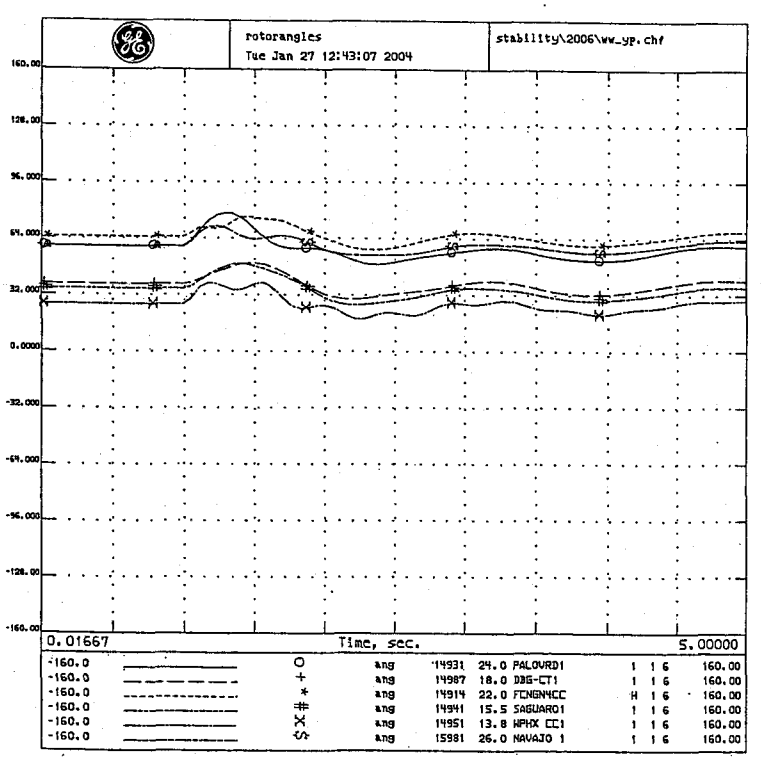

ERN ELECTRICITY COORDINATING COUNCIL
LT. WW-YAV line out
BER 28, 2003
WWG-YAV STAB; 1/03; T=0 3P FLT WWG500;FLSH CAPS MKP-YAV/YAV-WWG,
NAV-MKP/WWG;4C CLR FLT W/WWG-YAV;8C REIN;2006.dyd WSCC.bat

ALL COMMENTS FROM THE TSS REVIEW ARE ADDED.
MOST RECENT VERSION OF THE MDF USED.

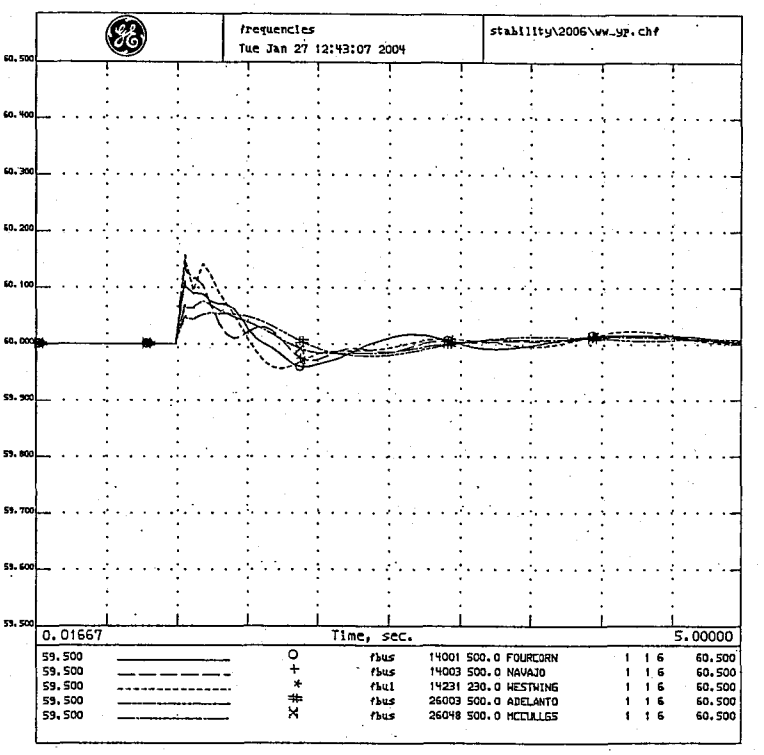

WESTERN ELECTRICITY COORDINATING COUNCIL
WW. FLT. WW-YAV line out
OCTOBER 28, 2003
WWG-YAV STAB; 1/03; T=0 3P FLT WWG500;FLSH CAPS MKP-YAV/YAV-WWG,
NAV-MKP/WWG;4C CLR FLT W/WWG-YAV;8C REIN;2006.dyd WSCC.bat

ALL COMMENTS FROM THE TSS REVIEW ARE ADDED.
MOST RECENT VERSION OF THE MDF USED.

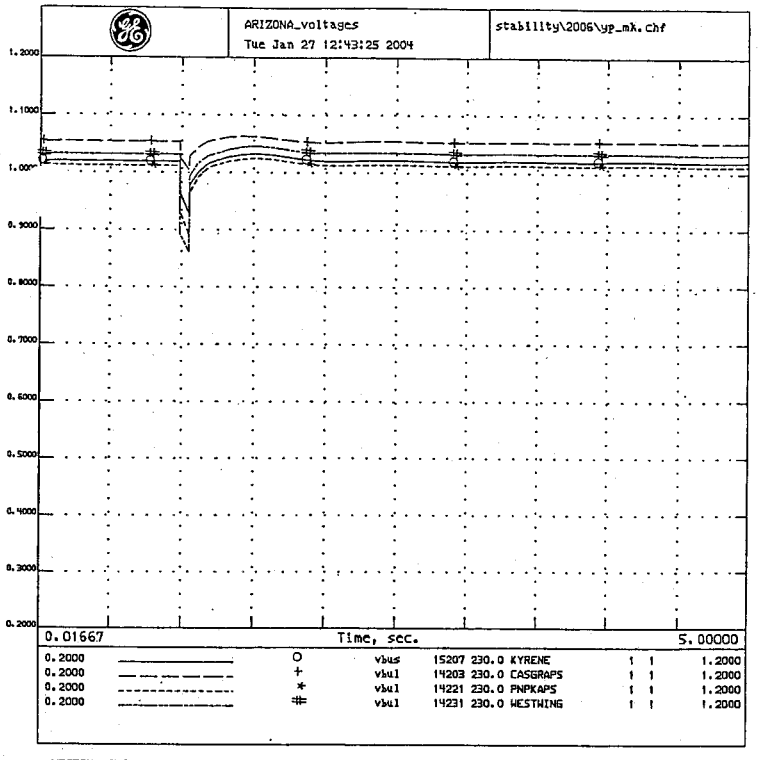

WESTERN ELECTRICITY COORDINATING COUNCIL
YAV. FLT. Yav-Moen line out
OCTOBER 28, 2003
YAV STAB; 1/03; T=0 3P FLT WHG500;FLSH CAPS MKP-YAV/YAV-WHG,
NAV-MKP/WHG;4C CLR FLT W/YAV-MNK;8C REIN;2006.dyd WSCC.bat

ALL COMMENTS FROM THE TSS REVIEW ARE ADDED.
MOST RECENT VERSION OF THE MDF USED.

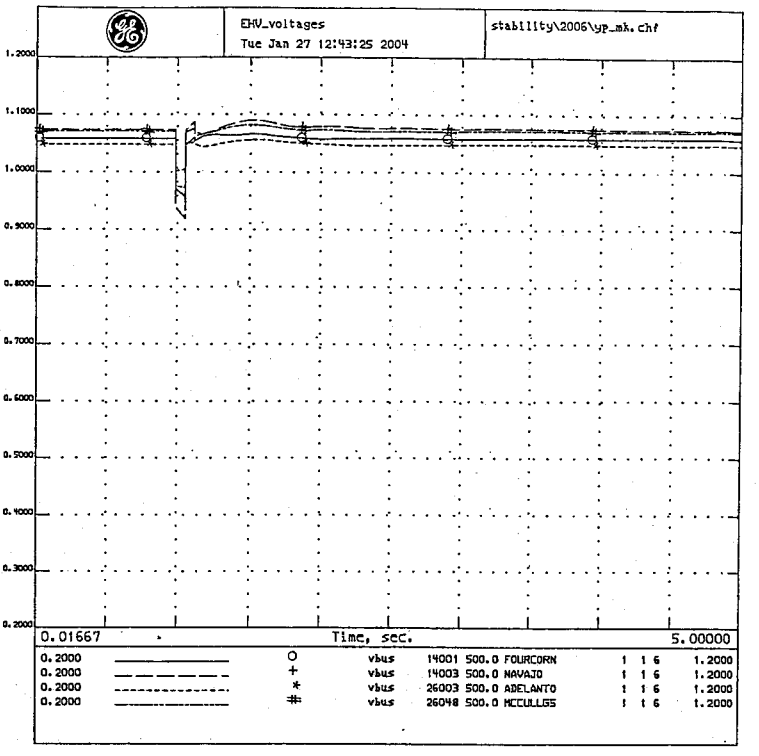

WESTERN ELECTRICITY COORDINATING COUNCIL
YAV. FLT. Yav-Moen line out
OCTOBER 28, 2003
YAV STAB; 1/03; T=0 3P FLT WHG500;FLSH CAPS MKP-YAV/YAV-WHG,
NAV-MKP/WHG;4C CLR FLT W/YAV-MNK;8C REIN;2006.dyd WSCC.bat

ALL COMMENTS FROM THE TSS REVIEW ARE ADDED.
MOST RECENT VERSION OF THE MDF USED.

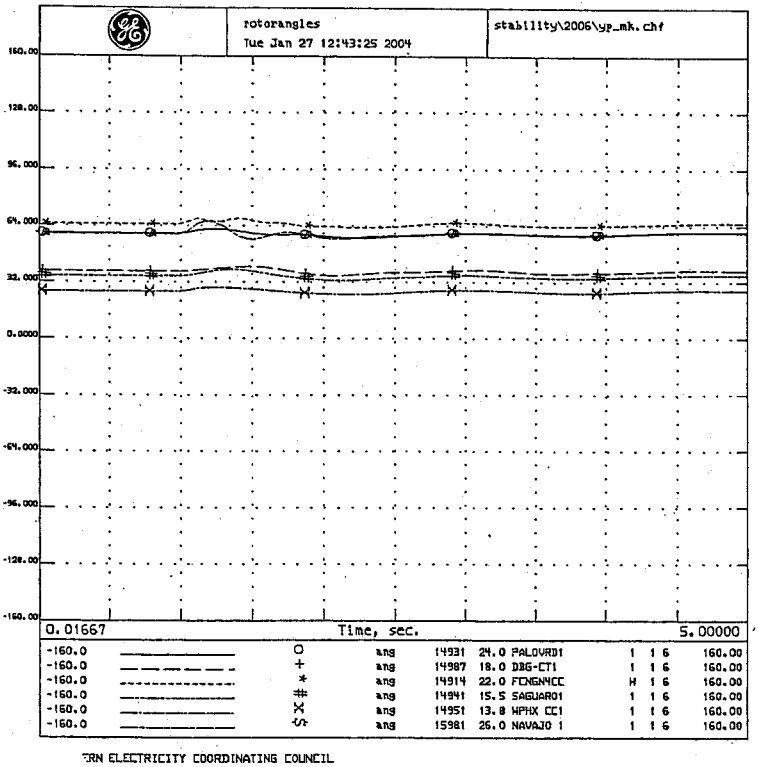

TRN ELECTRICITY COORDINATING COUNCIL
FLT. Yav-Moen line out
BER 28, 2003
YAV STAB; 1/03; T=0 3P FLT WHG500;FLSH CAPS MKP-YAV/YAV-WHG,
NAV-MKP/WHG;4C CLR FLT W/YAV-MNK;8C REIN;2006.dyd WSCC.bat

ALL COMMENTS FROM THE TSS REVIEW ARE ADDED.
MOST RECENT VERSION OF THE MDF USED.

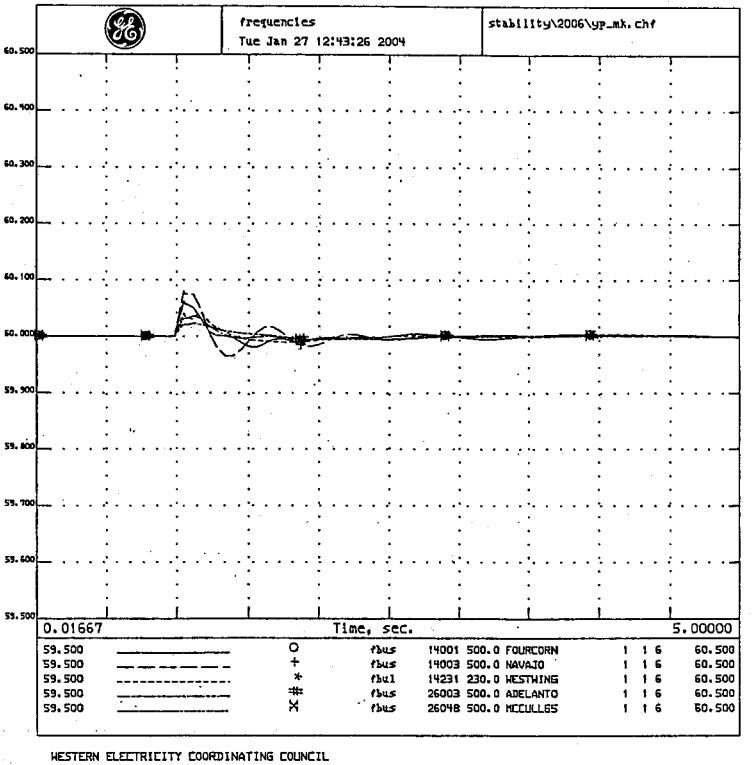

WESTERN ELECTRICITY COORDINATING COUNCIL
YAV. FLT. Yav-Moen line out
OCTOBER 28, 2003
YAV STAB; 1/03; T=0 3P FLT WHG500;FLSH CAPS MKP-YAV/YAV-WHG,
NAV-MKP/WHG;4C CLR FLT W/YAV-MNK;8C REIN;2006.dyd WSCC.bat

ALL COMMENTS FROM THE TSS REVIEW ARE ADDED.
MOST RECENT VERSION OF THE MDF USED.

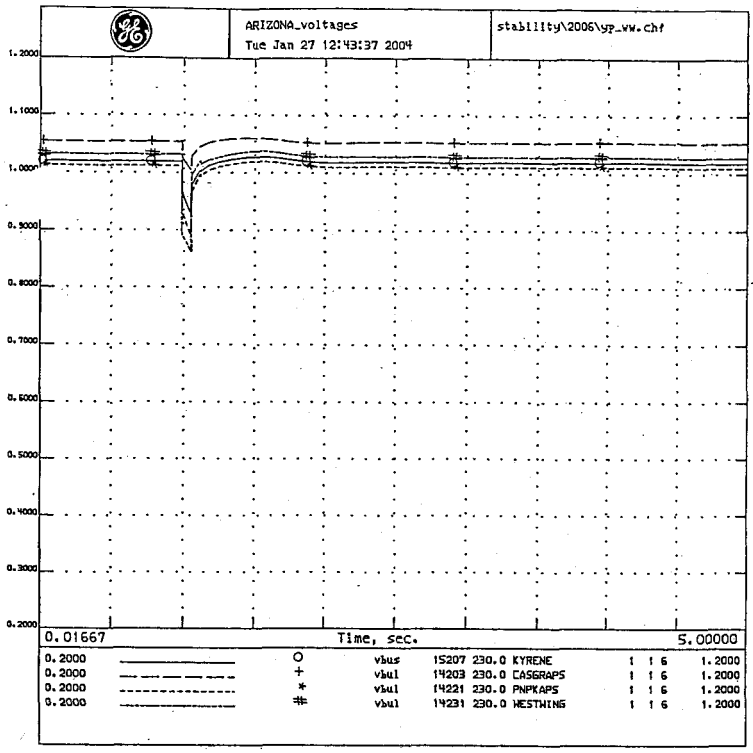

WESTERN ELECTRICITY COORDINATING COUNCIL
YAV. FLT. Yav-WW line out
OCTOBER 28, 2003
YAV STAB; 1/03; T=0 3P FLT WWG500;FLSH CAPS MKP-YAV/YAV-WWG,
NAV-MKP/WWG;4C CLR FLT W/YAV-WW;8C REIN;2006.dyd WSCC.bat

ALL COMMENTS FROM THE TSS REVIEW ARE ADDED.
MOST RECENT VERSION OF THE MDF USED.

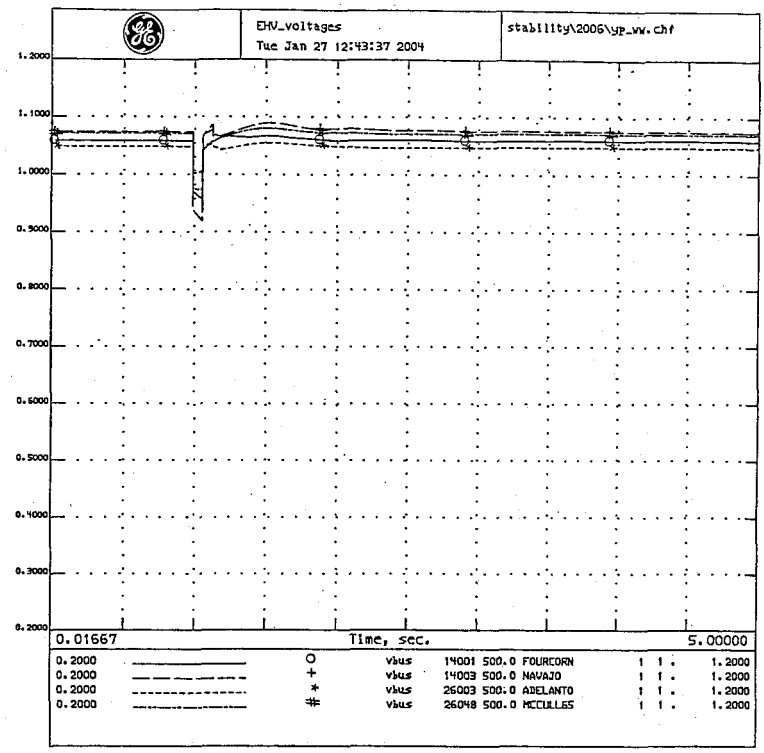

WESTERN ELECTRICITY COORDINATING COUNCIL
YAV. FLT. Yav-WW line out
OCTOBER 28, 2003
YAV STAB; 1/03; T=0 3P FLT WWG500;FLSH CAPS MKP-YAV/YAV-WWG,
NAV-MKP/WWG;4C CLR FLT W/YAV-WW;8C REIN;2006.dyd WSCC.bat

ALL COMMENTS FROM THE TSS REVIEW ARE ADDED.
MOST RECENT VERSION OF THE MDF USED.

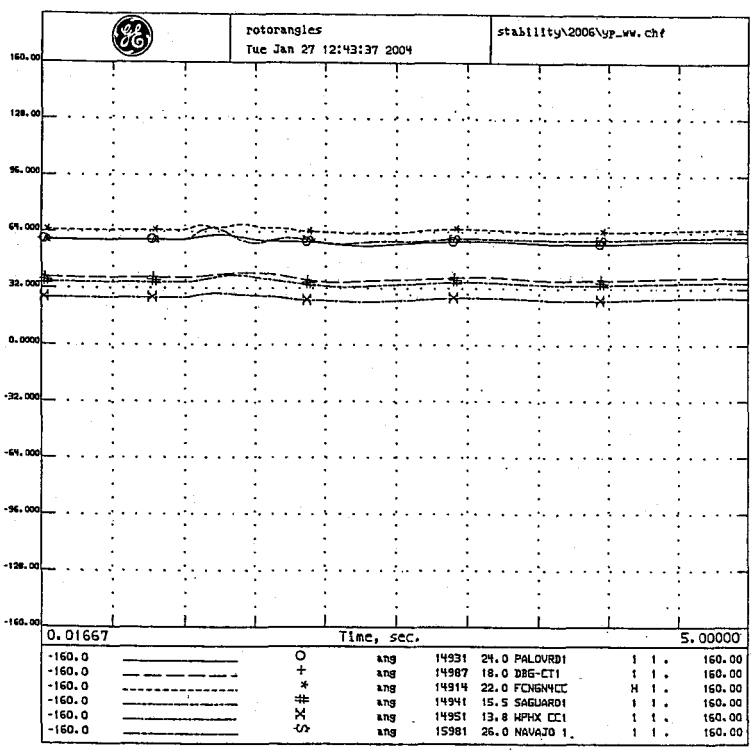

TRN ELECTRICITY COORDINATING COUNCIL
FLT. Yav-WW line out
ER 28, 2003
YAV STAB; 1/03; T=0 3P FLT WWG500;FLSH CAPS MKP-YAV/YAV-WWG,
NAV-MKP/WWG;4C CLR FLT W/YAV-WW;8C REIN;2006.dyd WSCC.bat

ALL COMMENTS FROM THE TSS REVIEW ARE ADDED.
MOST RECENT VERSION OF THE MDF USED.

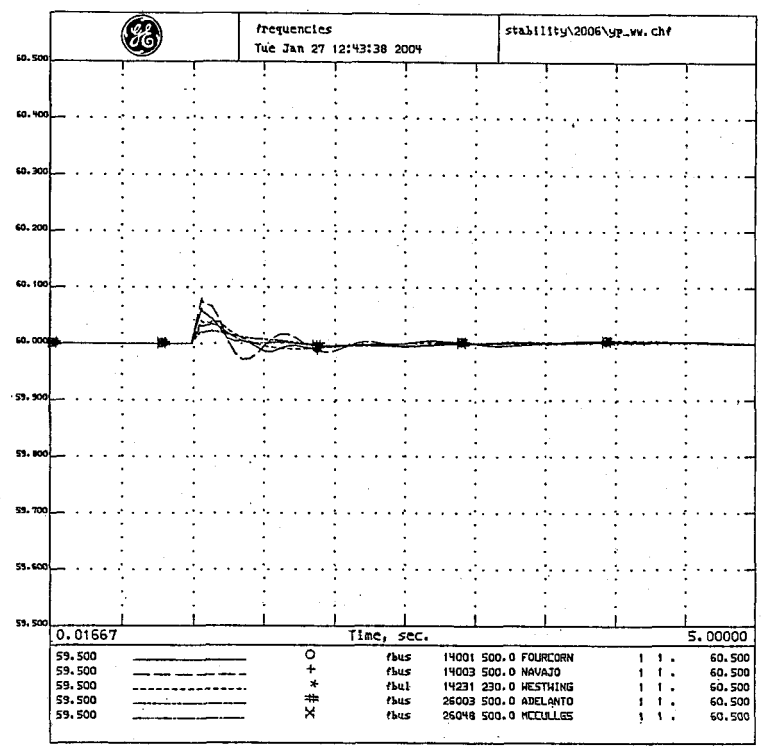

WESTERN ELECTRICITY COORDINATING COUNCIL
YAV. FLT. Yav-WW line out
OCTOBER 28, 2003
YAV STAB; 1/03; T=0 3P FLT WWG500;FLSH CAPS MKP-YAV/YAV-WWG,
NAV-MKP/WWG;4C CLR FLT W/YAV-WW;8C REIN;2006.dyd WSCC.bat

ALL COMMENTS FROM THE TSS REVIEW ARE ADDED.
MOST RECENT VERSION OF THE MDF USED.

APPENDIX C

2012
Stability Plots

Table of Contents

Simulation **Page**

Browning 500kv
- Browning-Kyrene outage C1

Cholla 500 & 345kv
- Cholla-Coronado outage C2
- Cholla-Four Corners outage C3
- Cholla-Pinnacle Peak outage C4
- Cholla-Saguaro outage C5

Four Corners 500kv
- Four Corners-Moenkopi outage C6

Jojoba 500kv
- Jojoba-Hassayampa outage C7
- Jojoba-Kyrene outage C8

Kyrene 500kv
- Kyrene-Jojoba outage C9

Moenkopi 500kv
- Moenkopi-Eldorado outage C10
- Moenkopi-Yavapai outage C11

North Gila 500kv
- North Gila-Hassayampa outage C12
- North Gila-Imperial Valley outage C13

Navajo 500kv
- Navajo-Crystal outage C14
- Navajo-Moenkopi outage C15
- Navajo-Raceway outage C16

Perkins 500kv
- Perkins-Mead outage C17

Palo Verde 500kv
- Palo Verde-Devers outage C18
- Palo Verde-Jojoba outage C19
- Palo Verde-North Gila outage C20
- Palo Verde-Rudd outage C21
- Palo Verde-Westwing outage C22

Pinnacle Peak 345kv
- Pinnacle Peak-Cholla outage C23

Rudd 500kv
- Rudd-Palo Verde outage C24

Raceway 500kv
- Raceway-Navajo outage C25

Saguaro 500kv
- Saguaro-Cholla outage C26

Westwing 500kv
- Westwing-Palo Verde outage C27
- Westwing-Raceway outage C28
- Westwing-Yavapai outage C29

Yavapai 500kv
- Yavapai-Moenkopi outage C30
- Yavapai-Westwing outage C31

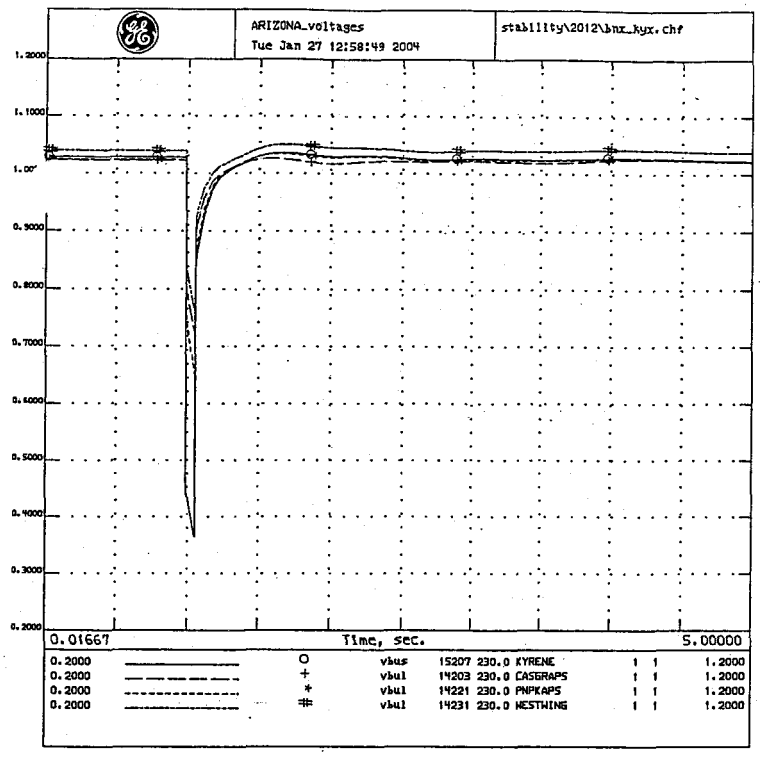

KYRENE FLT KYR-BRWN LINE OUT
2012 HS1A APROVED BASE CASE
MAY 19, 2003
BRWN-KYR STAB *1; 01/03; T=0 3P FLT KYR500;
4C CLR FLT W/BRWN-KYR;2012.dyd;WSCC.bpt

ALL COMMENTS RECEIVED FROM THE TSS REVIEW HAVE BEEN ADDED.
MOST RECENT VERSION OF THE MASTER DYNAMICS FILE IS USED, WHICH
CONTAINS THE NEW GOVERNOR MODELING RECEIVED IN RESPONSE TO THE
NOVEMBER 7, 2002 DATA REQUEST.

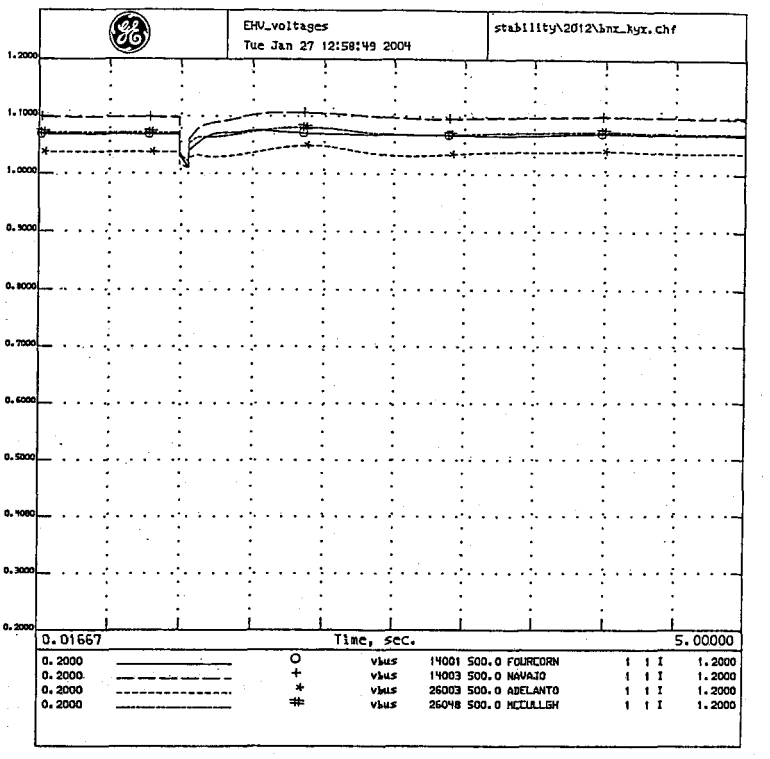

KYRENE FLT KYR-BRWN LINE OUT
2012 HS1A APROVED BASE CASE
MAY 19, 2003
BRWN-KYR STAB *1; 01/03; T=0 3P FLT KYR500;
4C CLR FLT W/BRWN-KYR;2012.dyd;WSCC.bpt

ALL COMMENTS RECEIVED FROM THE TSS REVIEW HAVE BEEN ADDED.
MOST RECENT VERSION OF THE MASTER DYNAMICS FILE IS USED, WHICH
CONTAINS THE NEW GOVERNOR MODELING RECEIVED IN RESPONSE TO THE
NOVEMBER 7, 2002 DATA REQUEST.

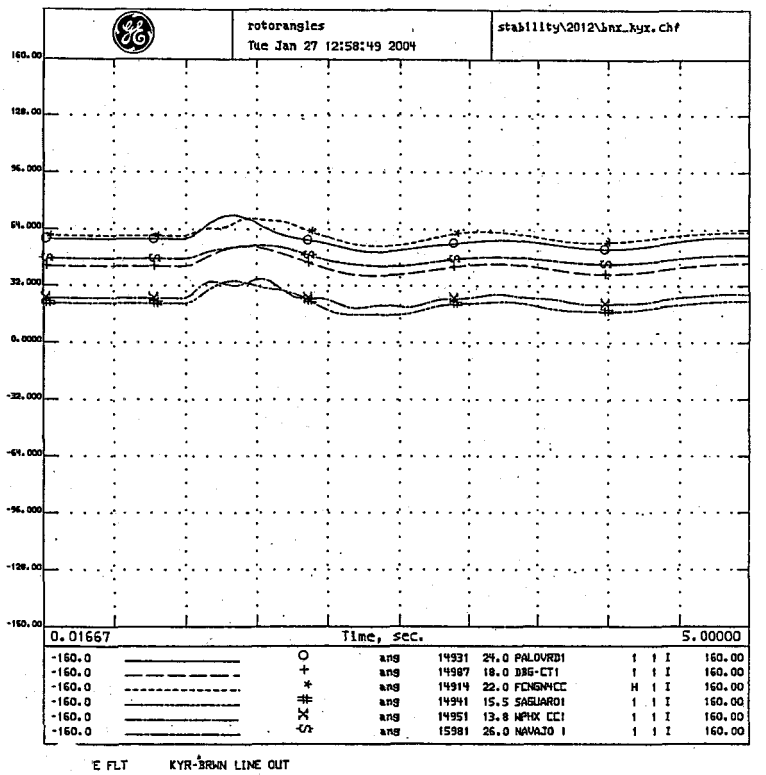

E FLT KYR-BRWN LINE OUT
HS1A APROVED BASE CASE
.... 19, 2003
BRWN-KYR STAB *1; 01/03; T=0 3P FLT KYR500;
4C CLR FLT W/BRWN-KYR;2012.dyd;WSCC.bpt

ALL COMMENTS RECEIVED FROM THE TSS REVIEW HAVE BEEN ADDED.
MOST RECENT VERSION OF THE MASTER DYNAMICS FILE IS USED, WHICH
CONTAINS THE NEW GOVERNOR MODELING RECEIVED IN RESPONSE TO THE
NOVEMBER 7, 2002 DATA REQUEST.

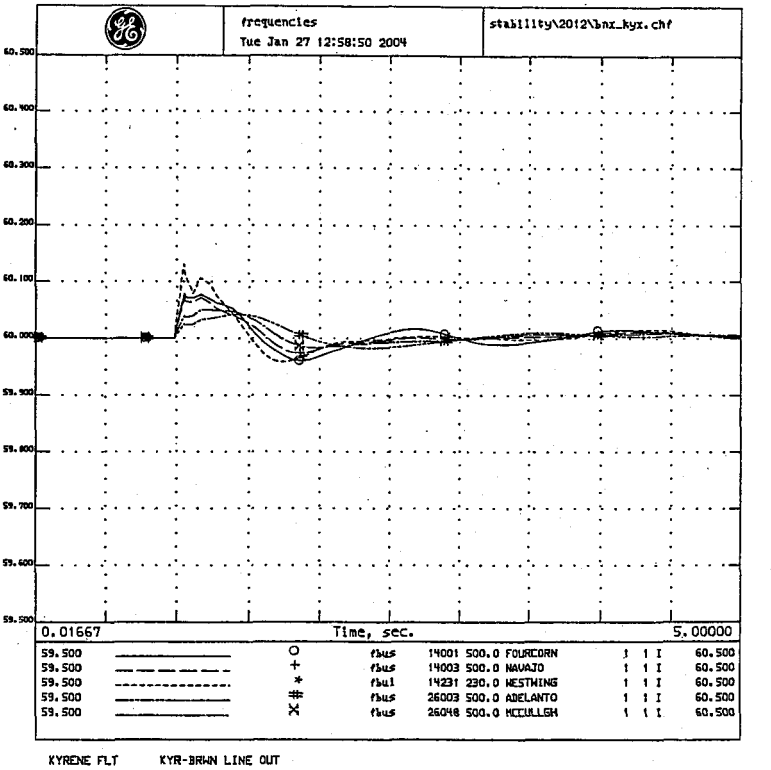

KYRENE FLT KYR-BRWN LINE OUT
2012 HS1A APROVED BASE CASE
MAY 19, 2003
BRWN-KYR STAB *1; 01/03; T=0 3P FLT KYR500;
4C CLR FLT W/BRWN-KYR;2012.dyd;WSCC.bpt

ALL COMMENTS RECEIVED FROM THE TSS REVIEW HAVE BEEN ADDED.
MOST RECENT VERSION OF THE MASTER DYNAMICS FILE IS USED, WHICH
CONTAINS THE NEW GOVERNOR MODELING RECEIVED IN RESPONSE TO THE
NOVEMBER 7, 2002 DATA REQUEST.

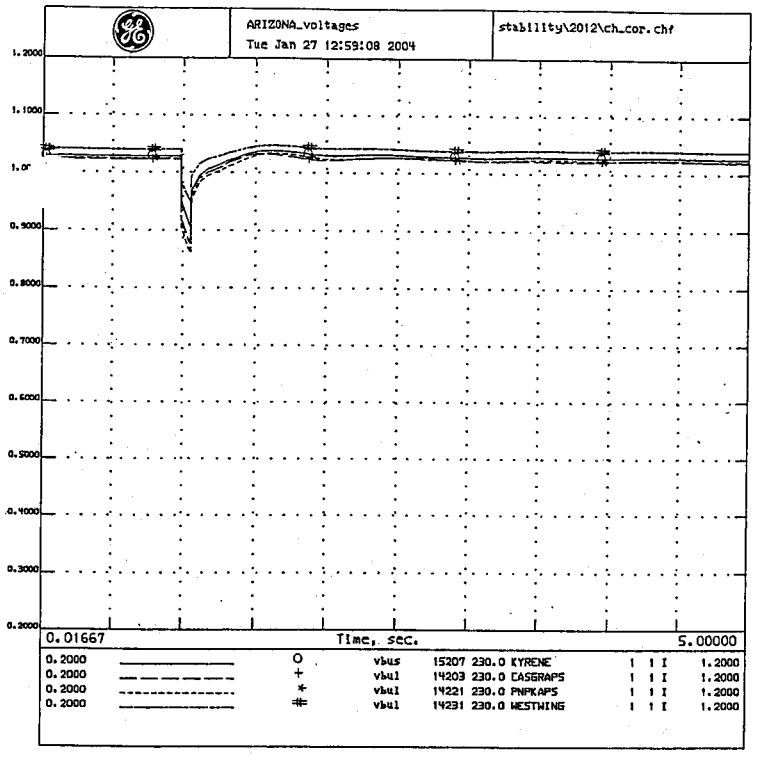

CHOLLA 500KV FLT CH-COR LINE OUT
2012 HS1A APROVED BASE CASE
MAY 19, 2003
CHO-COR STAB; 1/03; T=0 3P FLT CHO500;4C CLR FLT
W/CHO-COR;2012.dyd;HSCC.bpt

ALL COMMENTS RECEIVED FROM THE TSS REVIEW HAVE BEEN ADDED.
MOST RECENT VERSION OF THE MASTER DYNAMICS FILE IS USED, WHICH
CONTAINS THE NEW GOVERNOR MODELING RECEIVED IN RESPONSE TO THE
NOVEMBER 7, 2002 DATA REQUEST.

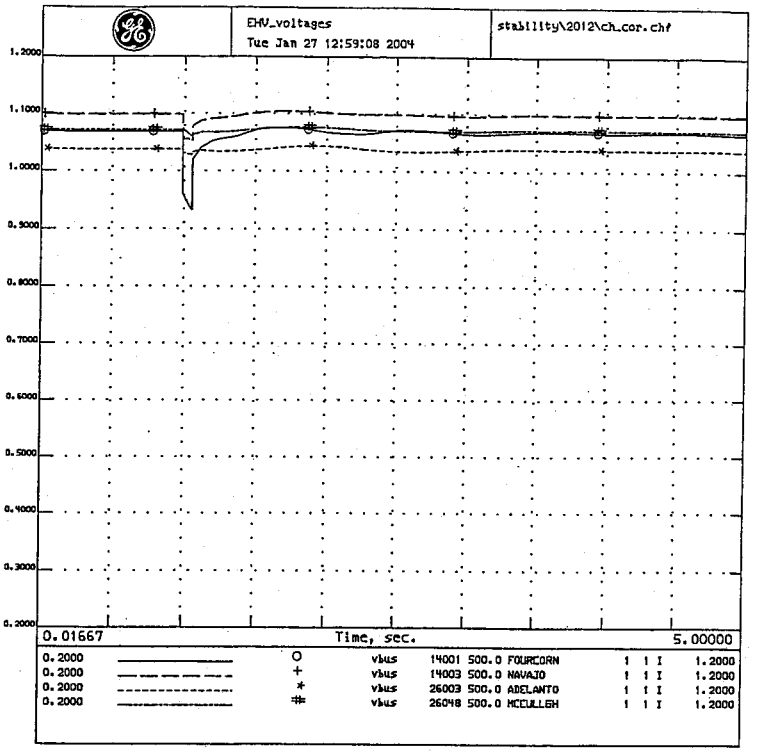

CHOLLA 500KV FLT CH-COR LINE OUT
2012 HS1A APROVED BASE CASE
MAY 19, 2003
CHO-COR STAB; 1/03; T=0 3P FLT CHO500;4C CLR FLT
W/CHO-COR;2012.dyd;HSCC.bpt

ALL COMMENTS RECEIVED FROM THE TSS REVIEW HAVE BEEN ADDED.
MOST RECENT VERSION OF THE MASTER DYNAMICS FILE IS USED, WHICH
CONTAINS THE NEW GOVERNOR MODELING RECEIVED IN RESPONSE TO THE
NOVEMBER 7, 2002 DATA REQUEST.

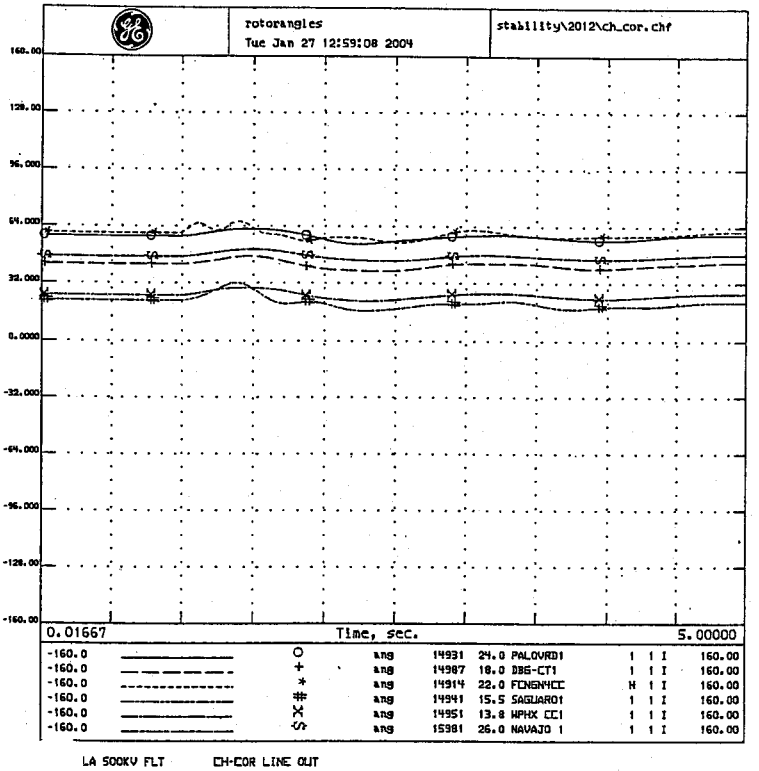

LA 500KV FLT CH-COR LINE OUT
2 HS1A APROVED BASE CASE
MAY 19, 2003
CHO-COR STAB; 1/03; T=0 3P FLT CHO500;4C CLR FLT
W/CHO-COR;2012.dyd;HSCC.bpt

ALL COMMENTS RECEIVED FROM THE TSS REVIEW HAVE BEEN ADDED.
MOST RECENT VERSION OF THE MASTER DYNAMICS FILE IS USED, WHICH
CONTAINS THE NEW GOVERNOR MODELING RECEIVED IN RESPONSE TO THE
NOVEMBER 7, 2002 DATA REQUEST.

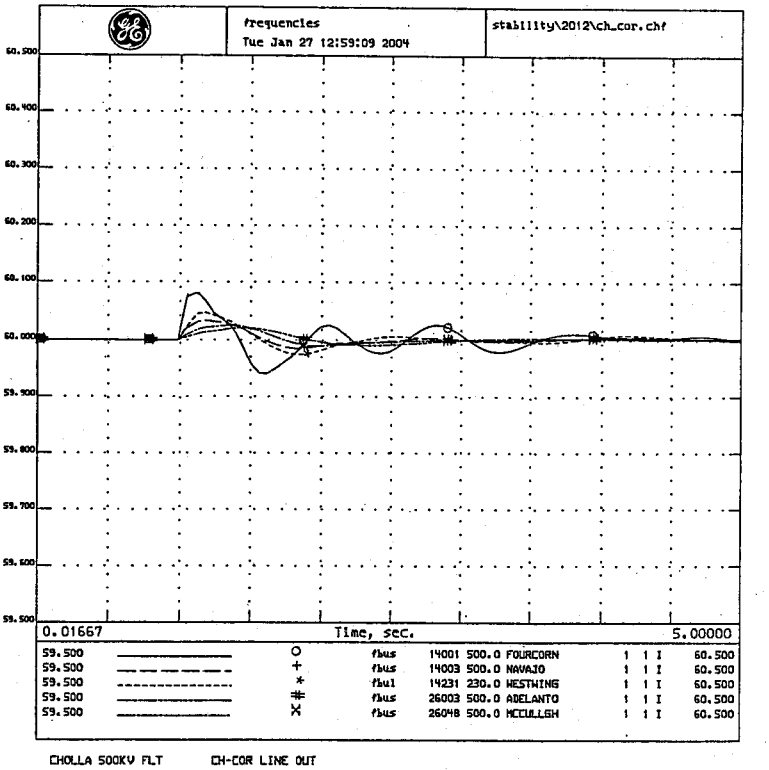

CHOLLA 500KV FLT CH-COR LINE OUT
2012 HS1A APROVED BASE CASE
MAY 19, 2003
CHO-COR STAB; 1/03; T=0 3P FLT CHO500;4C CLR FLT
W/CHO-COR;2012.dyd;HSCC.bpt

ALL COMMENTS RECEIVED FROM THE TSS REVIEW HAVE BEEN ADDED.
MOST RECENT VERSION OF THE MASTER DYNAMICS FILE IS USED, WHICH
CONTAINS THE NEW GOVERNOR MODELING RECEIVED IN RESPONSE TO THE
NOVEMBER 7, 2002 DATA REQUEST.

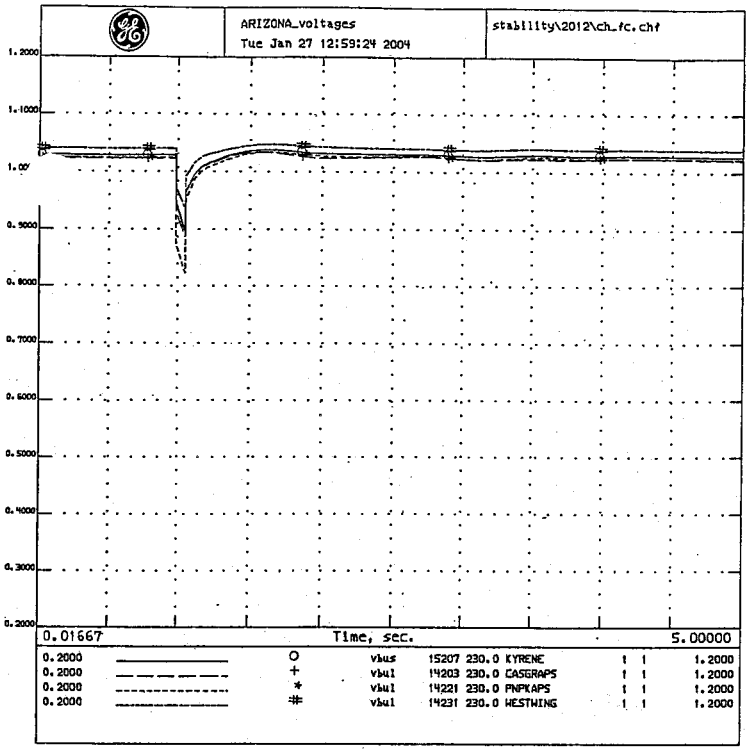

CHOLLA FLT CH-FC LINE OUT!
2012 HS1A APROVED BASE CASE
MAY 19, 2003
CHO-FC #1 STAB; 01/03; T=0 3P FLT CH0345;FLSH FCN-CHO CAPS;
4C CLR FLT W/CHO-FC #1;2012.dyd;HSCC.bpt

ALL COMMENTS RECEIVED FROM THE TSS REVIEW HAVE BEEN ADDED.
MOST RECENT VERSION OF THE MASTER DYNAMICS FILE IS USED, WHICH
CONTAINS THE NEW GOVERNOR MODELING RECEIVED IN RESPONSE TO THE
NOVEMBER 7, 2002 DATA REQUEST.

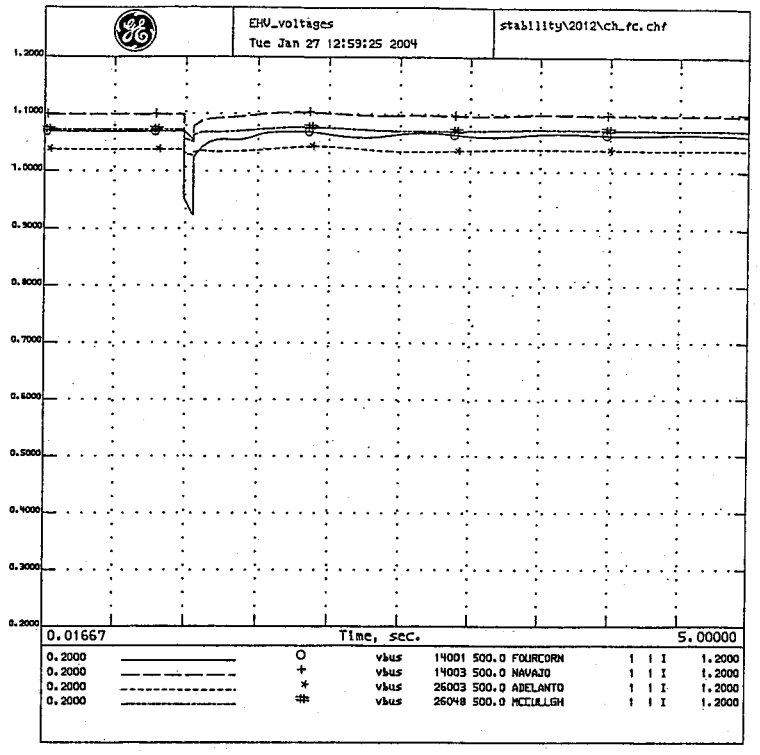

CHOLLA FLT CH-FC LINE OUT!
2012 HS1A APROVED BASE CASE
MAY 19, 2003
CHO-FC #1 STAB; 01/03; T=0 3P FLT CH0345;FLSH FCN-CHO CAPS;
4C CLR FLT W/CHO-FC #1;2012.dyd;HSCC.bpt

ALL COMMENTS RECEIVED FROM THE TSS REVIEW HAVE BEEN ADDED.
MOST RECENT VERSION OF THE MASTER DYNAMICS FILE IS USED, WHICH
CONTAINS THE NEW GOVERNOR MODELING RECEIVED IN RESPONSE TO THE
NOVEMBER 7, 2002 DATA REQUEST.

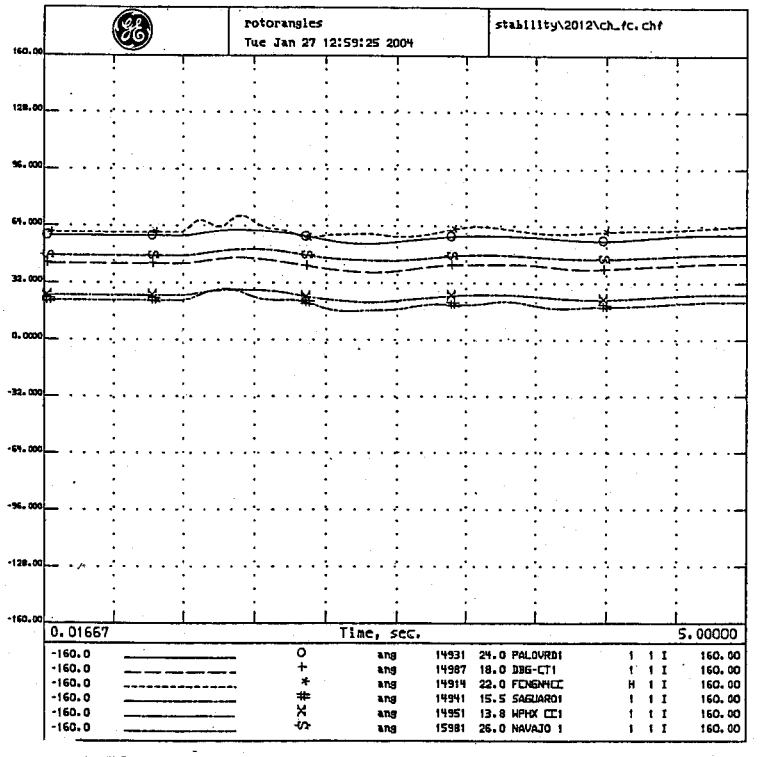

LA FLT CH-FC LINE OUT!
2 HS1A APROVED BASE CASE
MAY 19, 2003
CHO-FC #1 STAB; 01/03; T=0 3P FLT CH0345;FLSH FCN-CHO CAPS;
4C CLR FLT W/CHO-FC #1;2012.dyd;HSCC.bpt

ALL COMMENTS RECEIVED FROM THE TSS REVIEW HAVE BEEN ADDED.
MOST RECENT VERSION OF THE MASTER DYNAMICS FILE IS USED, WHICH
CONTAINS THE NEW GOVERNOR MODELING RECEIVED IN RESPONSE TO THE
NOVEMBER 7, 2002 DATA REQUEST.

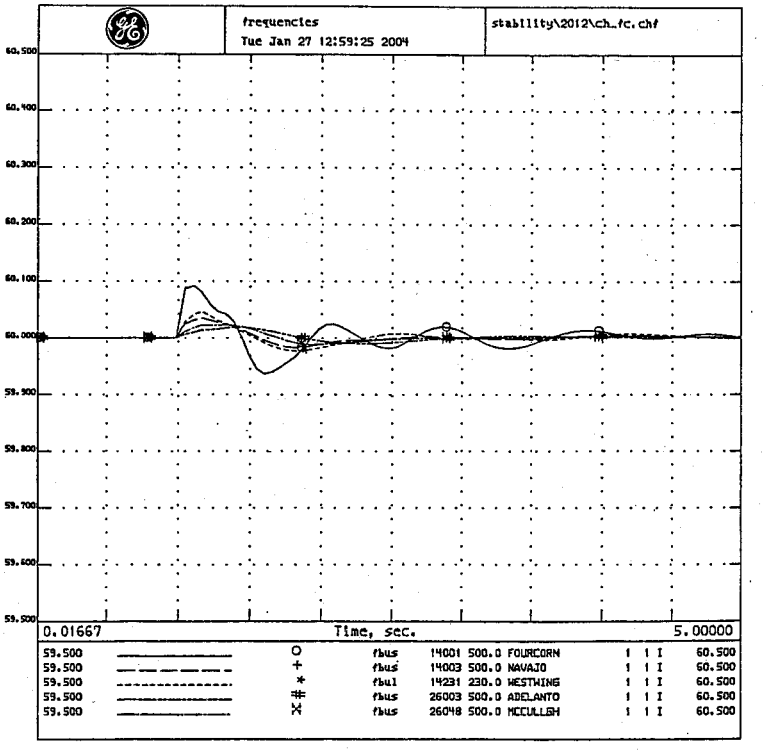

CHOLLA FLT CH-FC LINE OUT!
2012 HS1A APROVED BASE CASE
MAY 19, 2003
CHO-FC #1 STAB; 01/03; T=0 3P FLT CH0345;FLSH FCN-CHO CAPS;
4C CLR FLT W/CHO-FC #1;2012.dyd;HSCC.bpt

ALL COMMENTS RECEIVED FROM THE TSS REVIEW HAVE BEEN ADDED.
MOST RECENT VERSION OF THE MASTER DYNAMICS FILE IS USED, WHICH
CONTAINS THE NEW GOVERNOR MODELING RECEIVED IN RESPONSE TO THE
NOVEMBER 7, 2002 DATA REQUEST.

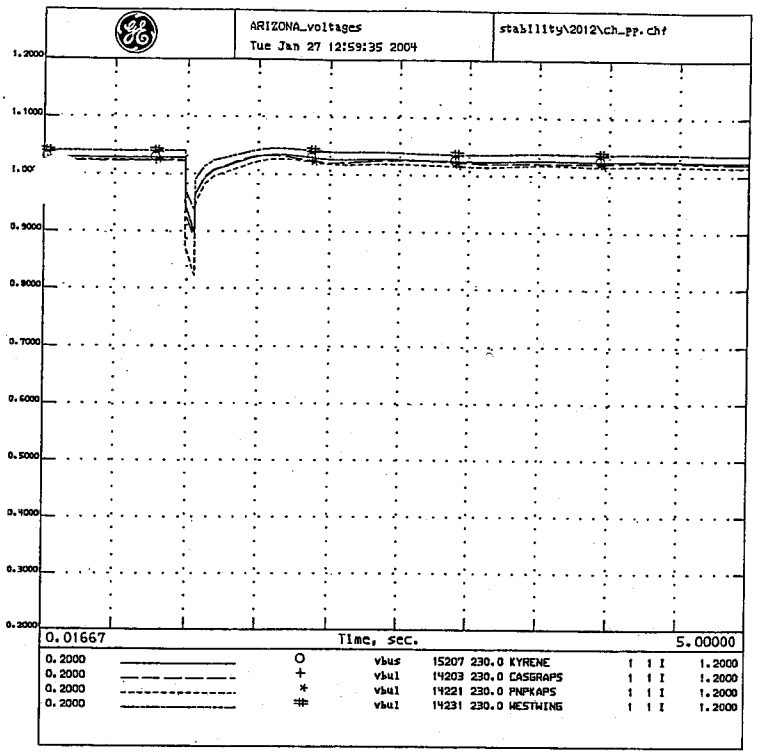

CHOLLA FLT CH-PPK LINE OUT!
2012 HS1A APROVED BASE CASE
MAY 19, 2003
CHO-PPK #1 STAB; 01/03; T=0 3P FLT CHO345;FLSH FCN-CHO CAPS;
4C CLR FLT W/CHO-PPK #1;8C REIN CAPS;2012.dyd;WSCC.bpt

ALL COMMENTS RECEIVED FROM THE TSS REVIEW HAVE BEEN ADDED.
MOST RECENT VERSION OF THE MASTER DYNAMICS FILE IS USED, WHICH
CONTAINS THE NEW GOVERNOR MODELING RECEIVED IN RESPONSE TO THE
NOVEMBER 7, 2002 DATA REQUEST.

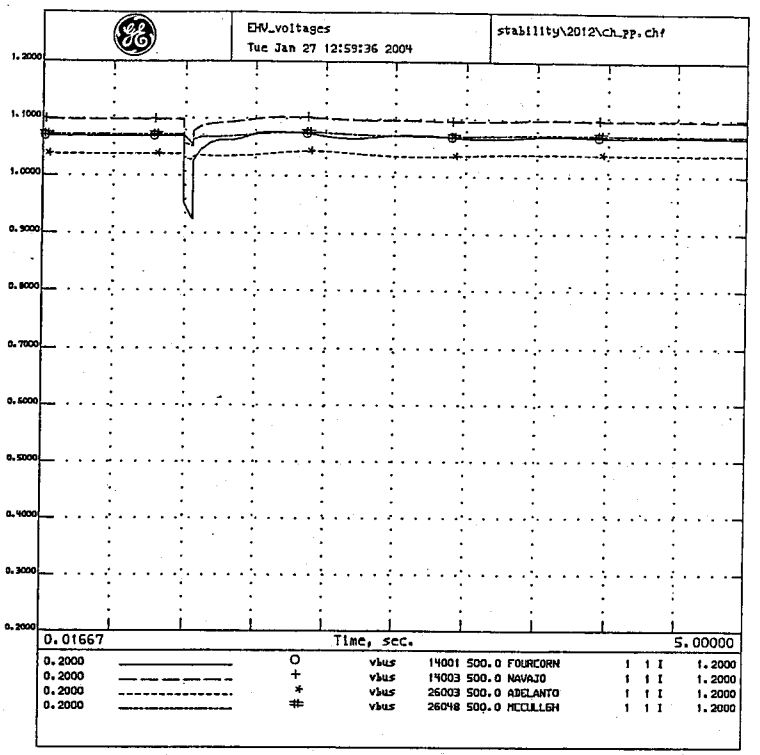

CHOLLA FLT CH-PPK LINE OUT!
2012 HS1A APROVED BASE CASE
MAY 19, 2003
CHO-PPK #1 STAB; 01/03; T=0 3P FLT CHO345;FLSH FCN-CHO CAPS;
4C CLR FLT W/CHO-PPK #1;8C REIN CAPS;2012.dyd;WSCC.bpt

ALL COMMENTS RECEIVED FROM THE TSS REVIEW HAVE BEEN ADDED.
MOST RECENT VERSION OF THE MASTER DYNAMICS FILE IS USED, WHICH
CONTAINS THE NEW GOVERNOR MODELING RECEIVED IN RESPONSE TO THE
NOVEMBER 7, 2002 DATA REQUEST.

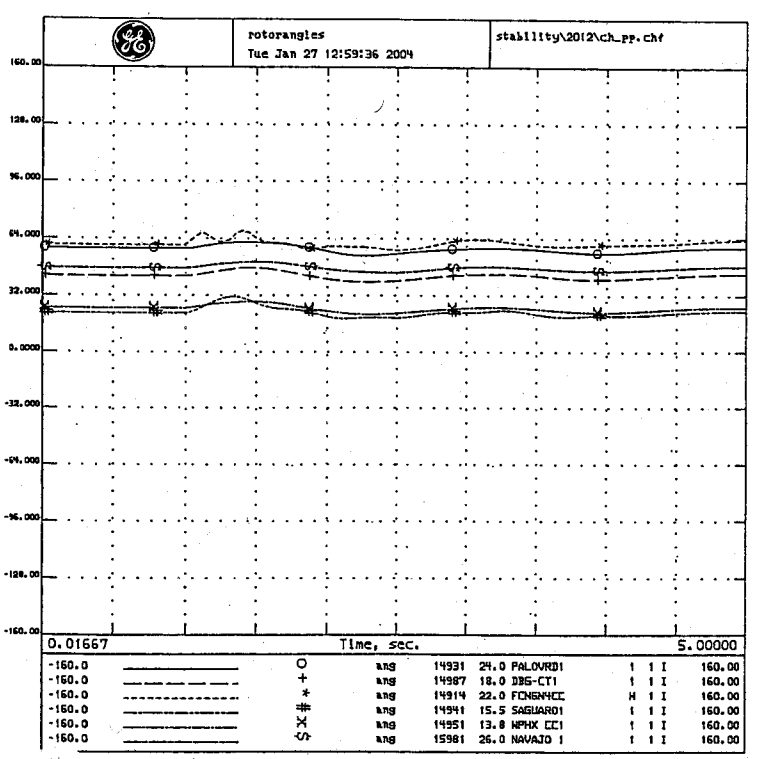

_A FLT CH-PPK LINE OUT!
2 HS1A APROVED BASE CASE
MAY 19, 2003
CHO-PPK #1 STAB; 01/03; T=0 3P FLT CHO345;FLSH FCN-CHO CAPS;
4C CLR FLT W/CHO-PPK #1;8C REIN CAPS;2012.dyd;WSCC.bpt

ALL COMMENTS RECEIVED FROM THE TSS REVIEW HAVE BEEN ADDED.
MOST RECENT VERSION OF THE MASTER DYNAMICS FILE IS USED, WHICH
CONTAINS THE NEW GOVERNOR MODELING RECEIVED IN RESPONSE TO THE
NOVEMBER 7, 2002 DATA REQUEST.

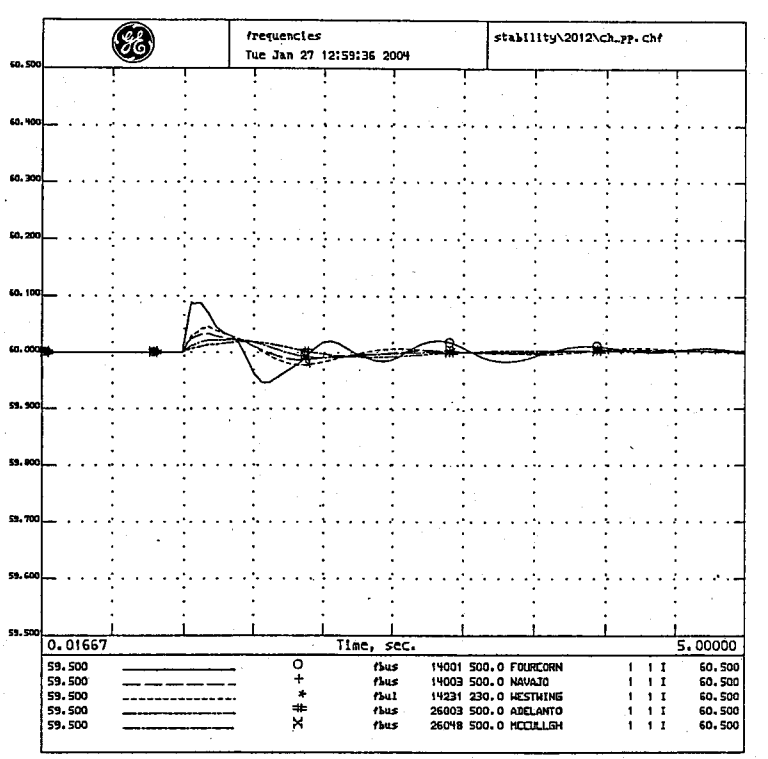

CHOLLA FLT CH-PPK LINE OUT!
2012 HS1A APROVED BASE CASE
MAY 19, 2003
CHO-PPK #1 STAB; 01/03; T=0 3P FLT CHO345;FLSH FCN-CHO CAPS;
4C CLR FLT W/CHO-PPK #1;8C REIN CAPS;2012.dyd;WSCC.bpt

ALL COMMENTS RECEIVED FROM THE TSS REVIEW HAVE BEEN ADDED.
MOST RECENT VERSION OF THE MASTER DYNAMICS FILE IS USED, WHICH
CONTAINS THE NEW GOVERNOR MODELING RECEIVED IN RESPONSE TO THE
NOVEMBER 7, 2002 DATA REQUEST.

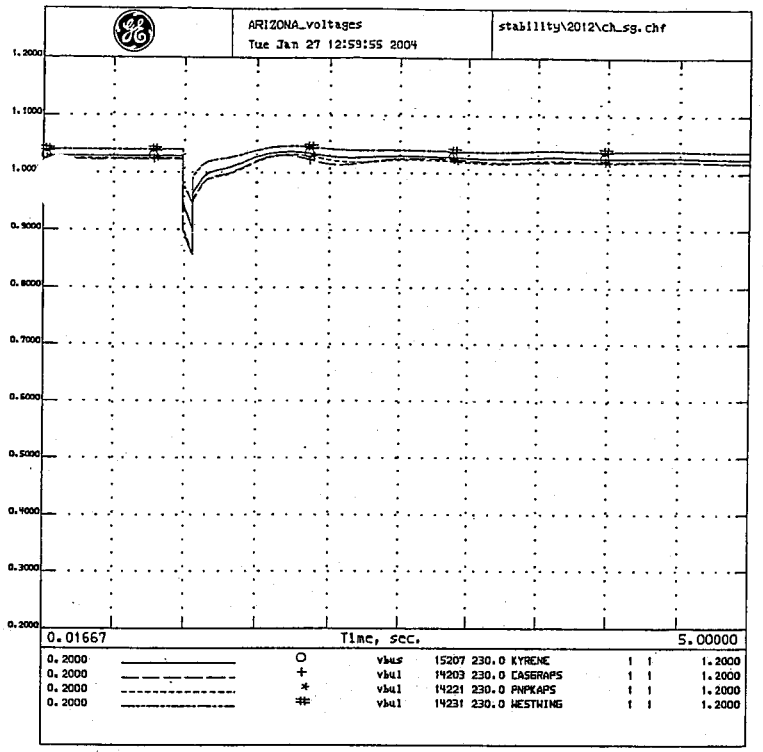

CHOLLA 500KV FLT CH-SAG LINE OUT
2012 HS1A APROVED BASE CASE
MAY 19, 2003
CHO-SAG STAB; 1/03; T=0 3P FLT CHO500;4C CLR FLT
W/CHO-SAG;2012.dyd;HSCC.bpt

ALL COMMENTS RECEIVED FROM THE TSS REVIEW HAVE BEEN ADDED.
MOST RECENT VERSION OF THE MASTER DYNAMICS FILE IS USED, WHICH
CONTAINS THE NEW GOVERNOR MODELING RECEIVED IN RESPONSE TO THE
NOVEMBER 7, 2002 DATA REQUEST.

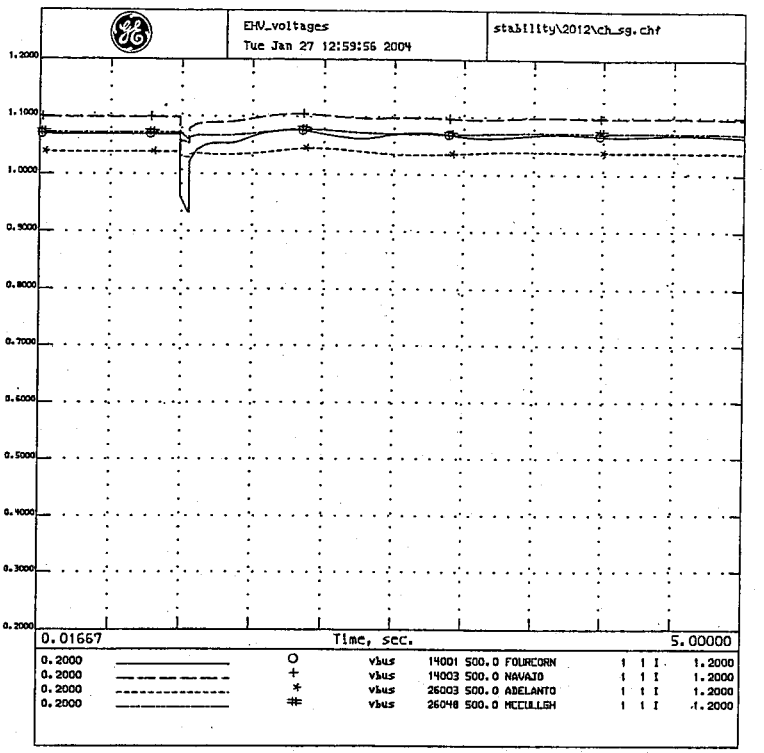

CHOLLA 500KV FLT CH-SAG LINE OUT
2012 HS1A APROVED BASE CASE
MAY 19, 2003
CHO-SAG STAB; 1/03; T=0 3P FLT CHO500;4C CLR FLT
W/CHO-SAG;2012.dyd;HSCC.bpt

ALL COMMENTS RECEIVED FROM THE TSS REVIEW HAVE BEEN ADDED.
MOST RECENT VERSION OF THE MASTER DYNAMICS FILE IS USED, WHICH
CONTAINS THE NEW GOVERNOR MODELING RECEIVED IN RESPONSE TO THE
NOVEMBER 7, 2002 DATA REQUEST.

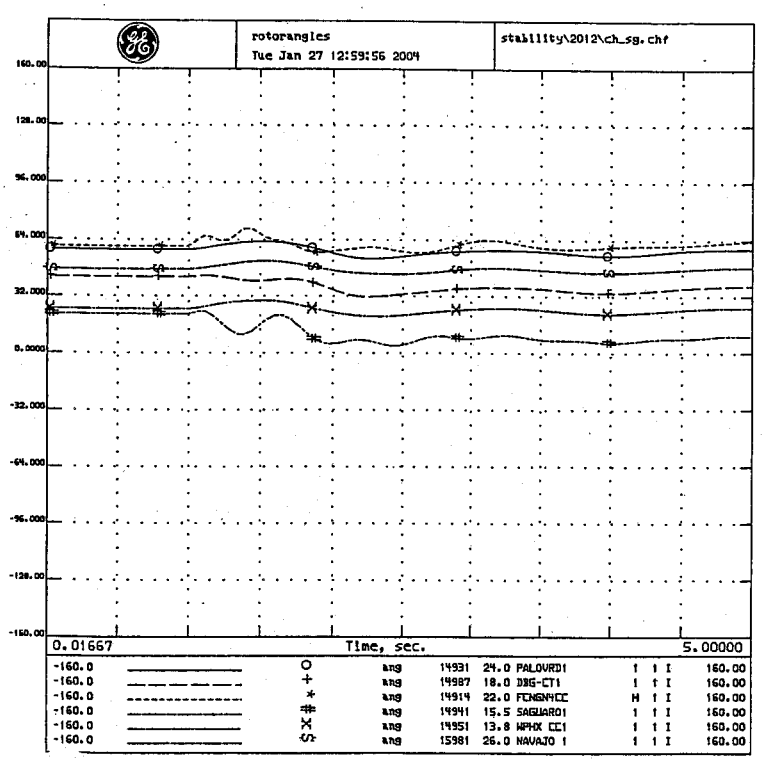

A 500KV FLT CH-SAG LINE OUT
HS1A APROVED BASE CASE
MAY 19, 2003
CHO-SAG STAB; 1/03; T=0 3P FLT CHO500;4C CLR FLT
W/CHO-SAG;2012.dyd;HSCC.bpt

ALL COMMENTS RECEIVED FROM THE TSS REVIEW HAVE BEEN ADDED.
MOST RECENT VERSION OF THE MASTER DYNAMICS FILE IS USED, WHICH
CONTAINS THE NEW GOVERNOR MODELING RECEIVED IN RESPONSE TO THE
NOVEMBER 7, 2002 DATA REQUEST.

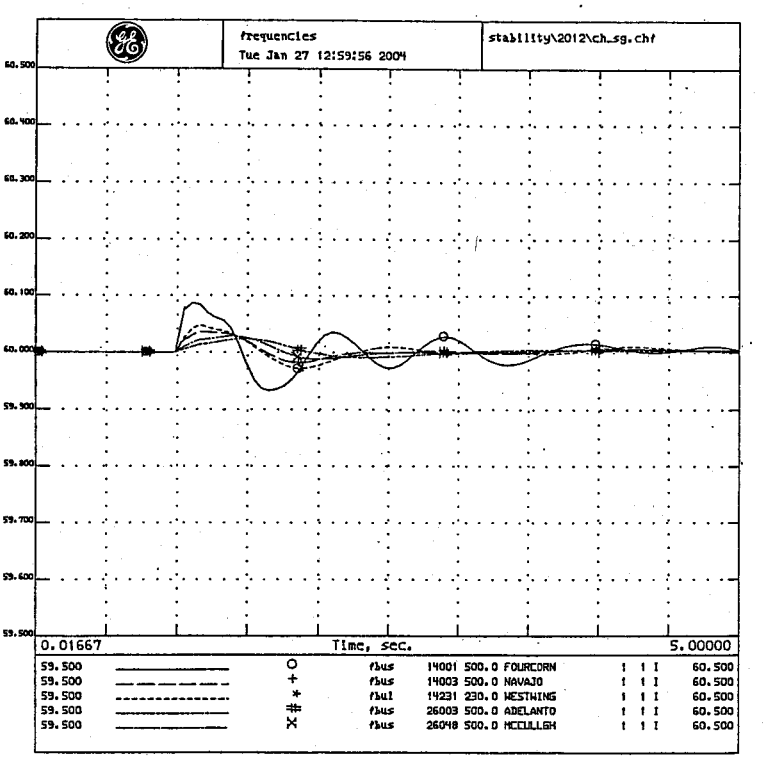

CHOLLA 500KV FLT CH-SAG LINE OUT
2012 HS1A APROVED BASE CASE
MAY 19, 2003
CHO-SAG STAB; 1/03; T=0 3P FLT CHO500;4C CLR FLT
W/CHO-SAG;2012.dyd;HSCC.bpt

ALL COMMENTS RECEIVED FROM THE TSS REVIEW HAVE BEEN ADDED.
MOST RECENT VERSION OF THE MASTER DYNAMICS FILE IS USED, WHICH
CONTAINS THE NEW GOVERNOR MODELING RECEIVED IN RESPONSE TO THE
NOVEMBER 7, 2002 DATA REQUEST.

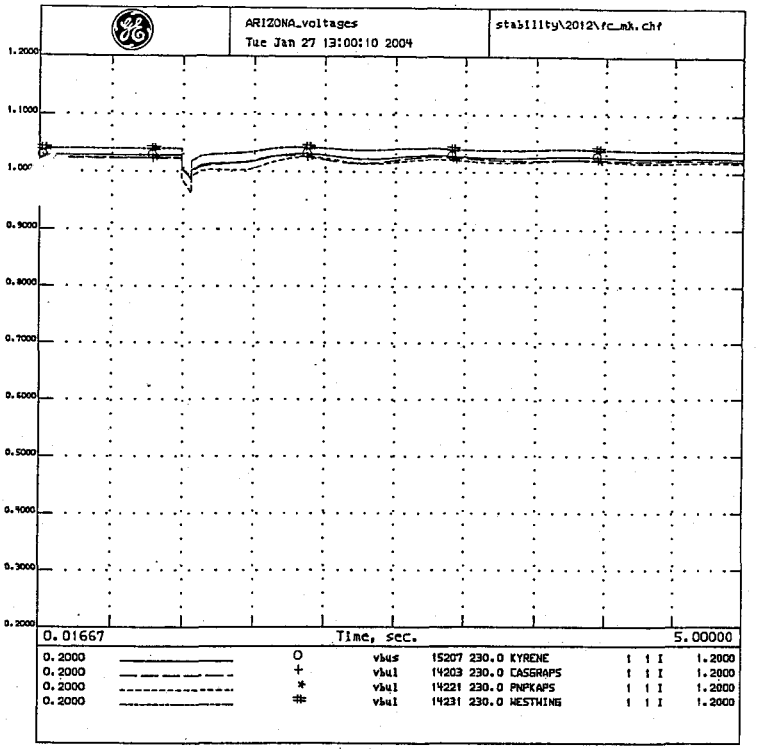

FCN FLT500 FCN-MNK out
2012 HS1A APROVED BASE CASE
MAY 19, 2003
FOURCORN-MOENKOPI STAB; 1/03; T=0 3P FLT FCN500;10% FLT DMPING;FLSH
CAPS FCN-MKP/NAV-MKP;4C CLR FLT W/FCN-MKP;8C REIN CAPS;2012.dyd;WSCC.bpt

ALL COMMENTS RECEIVED FROM THE TSS REVIEW HAVE BEEN ADDED.
MOST RECENT VERSION OF THE MASTER DYNAMICS FILE IS USED, WHICH
CONTAINS THE NEW GOVERNOR MODELING RECEIVED IN RESPONSE TO THE
NOVEMBER 7, 2002 DATA REQUEST.

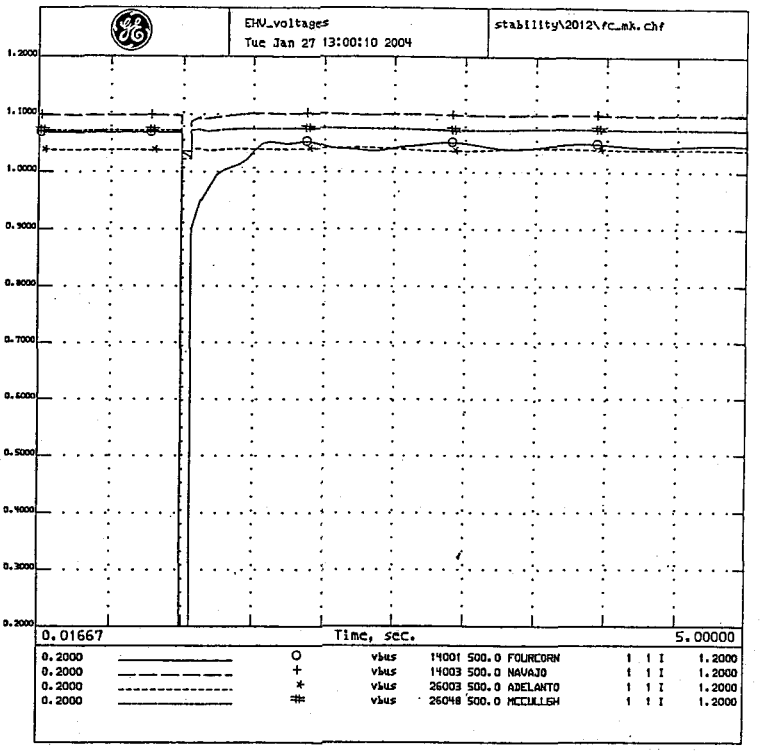

FCN FLT500 FCN-MNK out
2012 HS1A APROVED BASE CASE
MAY 19, 2003
FOURCORN-MOENKOPI STAB; 1/03; T=0 3P FLT FCN500;10% FLT DMPING;FLSH
CAPS FCN-MKP/NAV-MKP;4C CLR FLT W/FCN-MKP;8C REIN CAPS;2012.dyd;WSCC.bpt

ALL COMMENTS RECEIVED FROM THE TSS REVIEW HAVE BEEN ADDED.
MOST RECENT VERSION OF THE MASTER DYNAMICS FILE IS USED, WHICH
CONTAINS THE NEW GOVERNOR MODELING RECEIVED IN RESPONSE TO THE
NOVEMBER 7, 2002 DATA REQUEST.

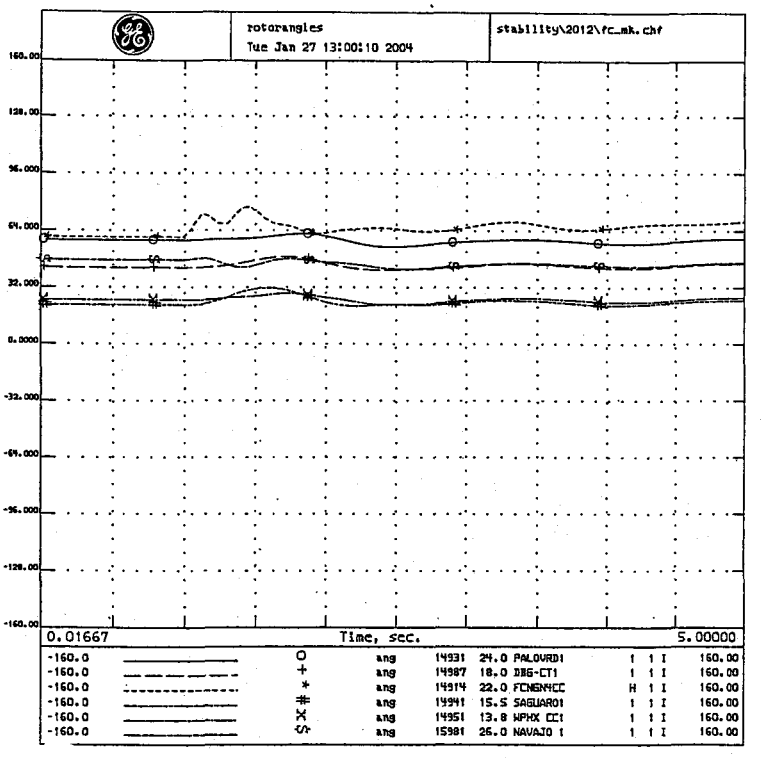

FLT500 FCN-MNK out
2012 HS1A APROVED BASE CASE
MAY 19, 2003
FOURCORN-MOENKOPI STAB; 1/03; T=0 3P FLT FCN500;10% FLT DMPING;FLSH
CAPS FCN-MKP/NAV-MKP;4C CLR FLT W/FCN-MKP;8C REIN CAPS;2012.dyd;WSCC.bpt

ALL COMMENTS RECEIVED FROM THE TSS REVIEW HAVE BEEN ADDED.
MOST RECENT VERSION OF THE MASTER DYNAMICS FILE IS USED, WHICH
CONTAINS THE NEW GOVERNOR MODELING RECEIVED IN RESPONSE TO THE
NOVEMBER 7, 2002 DATA REQUEST.

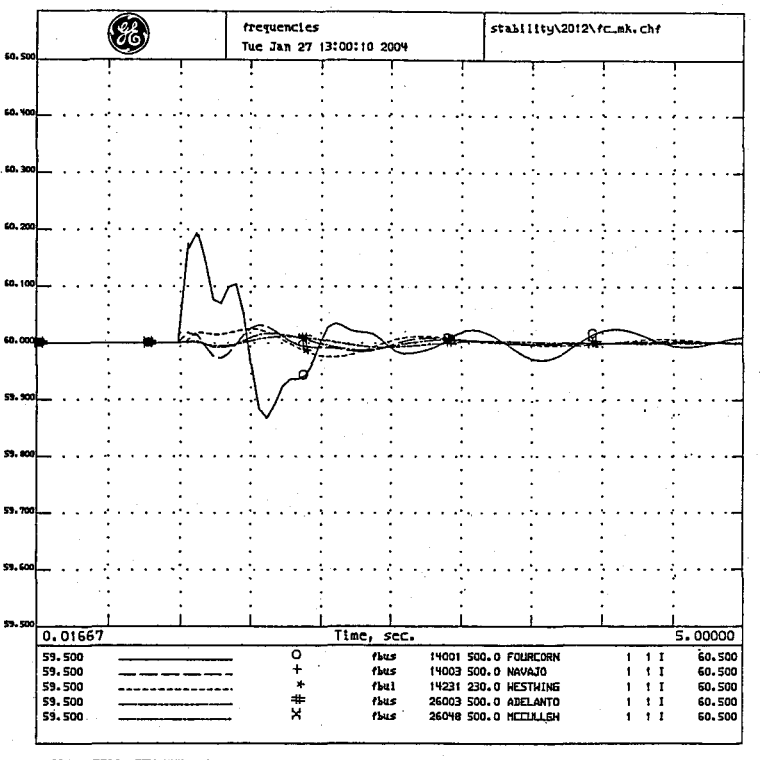

FCN FLT500 FCN-MNK out
2012 HS1A APROVED BASE CASE
MAY 19, 2003
FOURCORN-MOENKOPI STAB; 1/03; T=0 3P FLT FCN500;10% FLT DMPING;FLSH
CAPS FCN-MKP/NAV-MKP;4C CLR FLT W/FCN-MKP;8C REIN CAPS;2012.dyd;WSCC.bpt

ALL COMMENTS RECEIVED FROM THE TSS REVIEW HAVE BEEN ADDED.
MOST RECENT VERSION OF THE MASTER DYNAMICS FILE IS USED, WHICH
CONTAINS THE NEW GOVERNOR MODELING RECEIVED IN RESPONSE TO THE
NOVEMBER 7, 2002 DATA REQUEST.

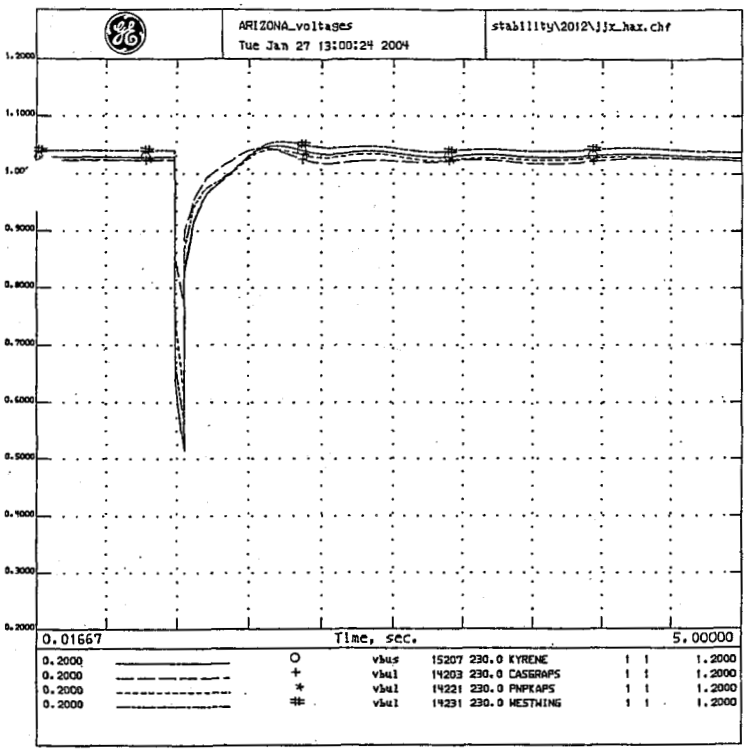

JOJOBA FLT JOJOBA-HASSY LINE OUT
2012 HS1A APROVED BASE CASE
MAY 19, 2003
HAS-JJ STAB *1; 01/03; T=0 3P FLT JJ500;10% FLT DMPING;FLSH CAPS
NAV-MKP/MKP-YAV,PV-DV/NG;4C CLR FLT W/HAS-JJ;8C REIN;2012.dyd;WSCC.bpt

ALL COMMENTS RECEIVED FROM THE TSS REVIEW HAVE BEEN ADDED.
MOST RECENT VERSION OF THE MASTER DYNAMICS FILE IS USED, WHICH
CONTAINS THE NEW GOVERNOR MODELING RECEIVED IN RESPONSE TO THE
NOVEMBER 7, 2002 DATA REQUEST.

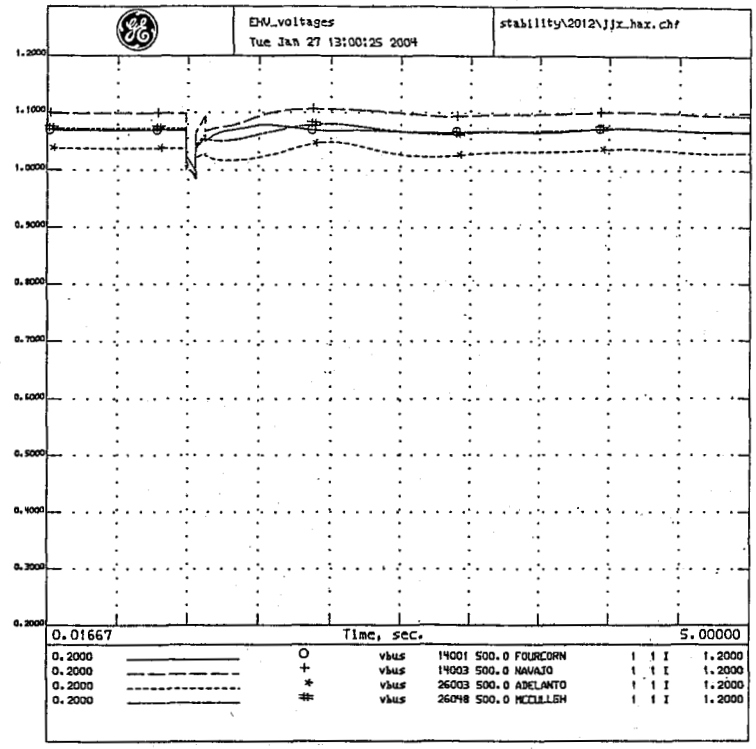

JOJOBA FLT JOJOBA-HASSY LINE OUT
2012 HS1A APROVED BASE CASE
MAY 19, 2003
HAS-JJ STAB *1; 01/03; T=0 3P FLT JJ500;10% FLT DMPING;FLSH CAPS
NAV-MKP/MKP-YAV,PV-DV/NG;4C CLR FLT W/HAS-JJ;8C REIN;2012.dyd;WSCC.bpt

ALL COMMENTS RECEIVED FROM THE TSS REVIEW HAVE BEEN ADDED.
MOST RECENT VERSION OF THE MASTER DYNAMICS FILE IS USED, WHICH
CONTAINS THE NEW GOVERNOR MODELING RECEIVED IN RESPONSE TO THE
NOVEMBER 7, 2002 DATA REQUEST.

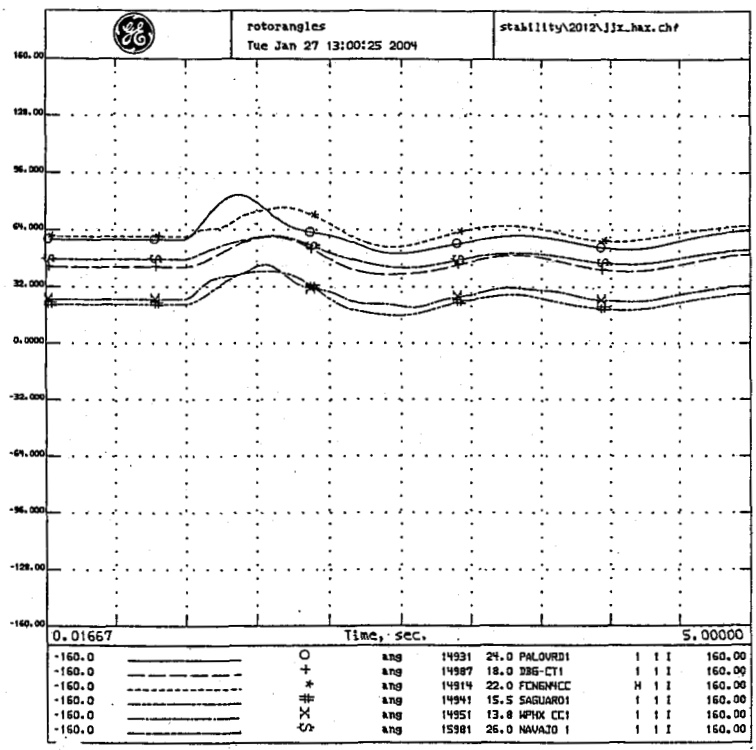

A FLT JOJOBA-HASSY LINE OUT
HS1A APROVED BASE CASE
19, 2003
HAS-JJ STAB *1; 01/03; T=0 3P FLT JJ500;10% FLT DMPING;FLSH CAPS
NAV-MKP/MKP-YAV,PV-DV/NG;4C CLR FLT W/HAS-JJ;8C REIN;2012.dyd;WSCC.bpt

ALL COMMENTS RECEIVED FROM THE TSS REVIEW HAVE BEEN ADDED.
MOST RECENT VERSION OF THE MASTER DYNAMICS FILE IS USED, WHICH
CONTAINS THE NEW GOVERNOR MODELING RECEIVED IN RESPONSE TO THE
NOVEMBER 7, 2002 DATA REQUEST.

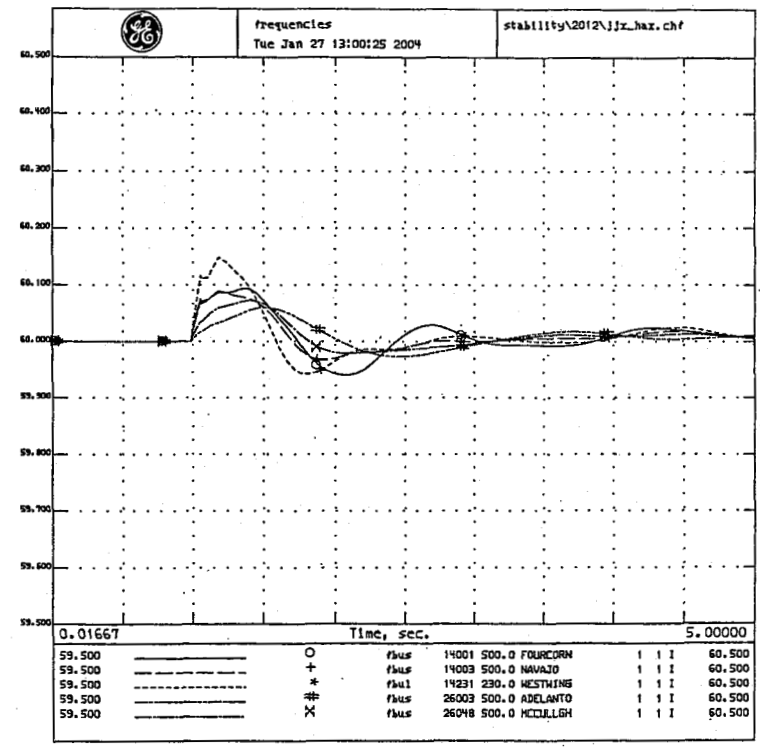

JOJOBA FLT JOJOBA-HASSY LINE OUT
2012 HS1A APROVED BASE CASE
MAY 19, 2003
HAS-JJ STAB *1; 01/03; T=0 3P FLT JJ500;10% FLT DMPING;FLSH CAPS
NAV-MKP/MKP-YAV,PV-DV/NG;4C CLR FLT W/HAS-JJ;8C REIN;2012.dyd;WSCC.bpt

ALL COMMENTS RECEIVED FROM THE TSS REVIEW HAVE BEEN ADDED.
MOST RECENT VERSION OF THE MASTER DYNAMICS FILE IS USED, WHICH
CONTAINS THE NEW GOVERNOR MODELING RECEIVED IN RESPONSE TO THE
NOVEMBER 7, 2002 DATA REQUEST.

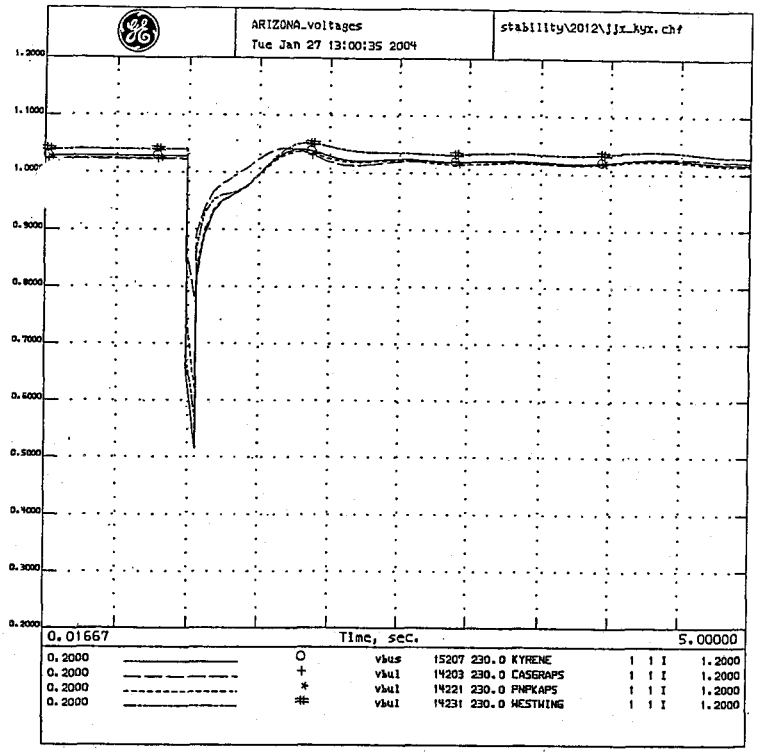

JOJOBA FLT JOJOBA-KYR LINE OUT
2012 HS1A APROVED BASE CASE
MAY 19, 2003
JJ-KYR STAB #1; 01/03; T=0 3P FLT JJ500;10% FLT DMPING;FLSH CAPS
NAV-MKP/MKP-YAV,PV-DV/NG;4C CLR FLT W/JJ-KYR;8C REIN;2012.dyd;WSCC.bpt

ALL COMMENTS RECEIVED FROM THE TSS REVIEW HAVE BEEN ADDED.
MOST RECENT VERSION OF THE MASTER DYNAMICS FILE IS USED, WHICH
CONTAINS THE NEW GOVERNOR MODELING RECEIVED IN RESPONSE TO THE
NOVEMBER 7, 2002 DATA REQUEST.

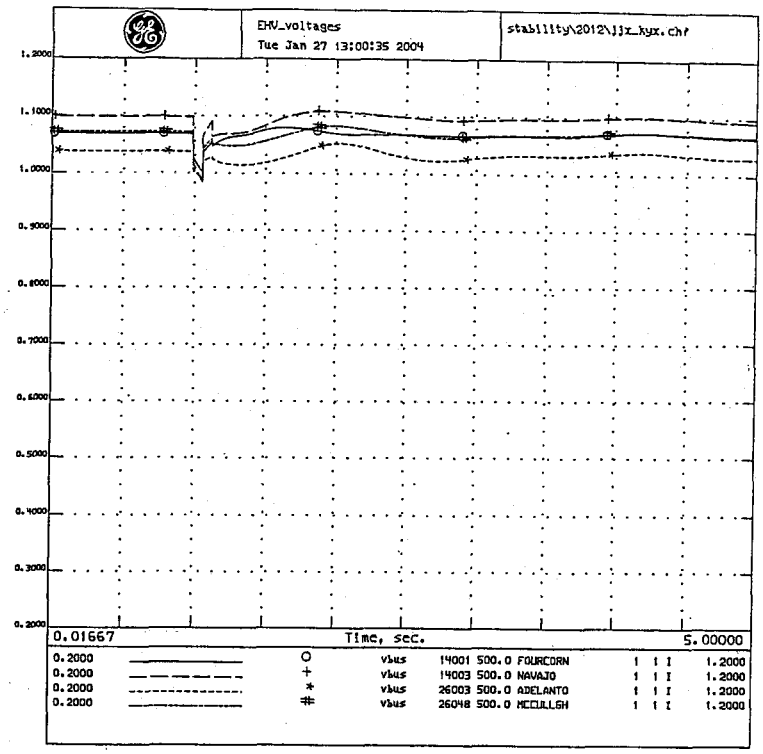

JOJOBA FLT JOJOBA-KYR LINE OUT
2012 HS1A APROVED BASE CASE
MAY 19, 2003
JJ-KYR STAB #1; 01/03; T=0 3P FLT JJ500;10% FLT DMPING;FLSH CAPS
NAV-MKP/MKP-YAV,PV-DV/NG;4C CLR FLT W/JJ-KYR;8C REIN;2012.dyd;WSCC.bpt

ALL COMMENTS RECEIVED FROM THE TSS REVIEW HAVE BEEN ADDED.
MOST RECENT VERSION OF THE MASTER DYNAMICS FILE IS USED, WHICH
CONTAINS THE NEW GOVERNOR MODELING RECEIVED IN RESPONSE TO THE
NOVEMBER 7, 2002 DATA REQUEST.

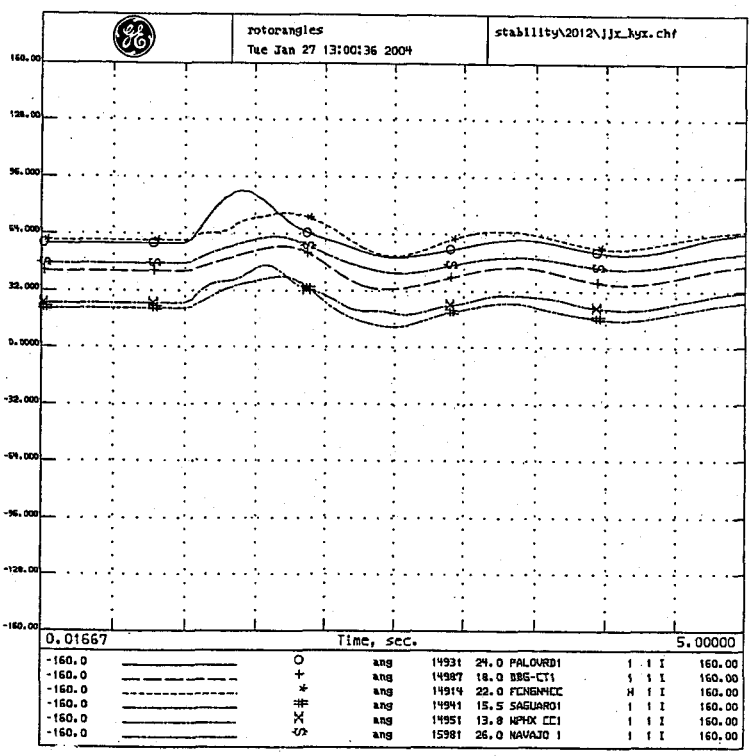

JOJOBA FLT JOJOBA-KYR LINE OUT
HS1A APROVED BASE CASE
... 19, 2003
JJ-KYR STAB #1; 01/03; T=0 3P FLT JJ500;10% FLT DMPING;FLSH CAPS
NAV-MKP/MKP-YAV,PV-DV/NG;4C CLR FLT W/JJ-KYR;8C REIN;2012.dyd;WSCC.bpt

ALL COMMENTS RECEIVED FROM THE TSS REVIEW HAVE BEEN ADDED.
MOST RECENT VERSION OF THE MASTER DYNAMICS FILE IS USED, WHICH
CONTAINS THE NEW GOVERNOR MODELING RECEIVED IN RESPONSE TO THE
NOVEMBER 7, 2002 DATA REQUEST.

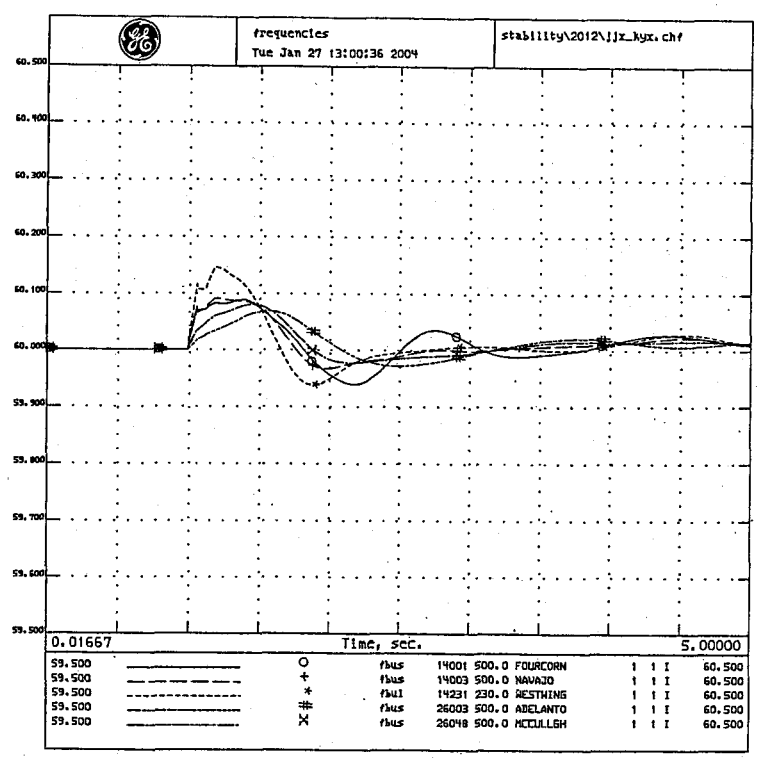

JOJOBA FLT JOJOBA-KYR LINE OUT
2012 HS1A APROVED BASE CASE
MAY 19, 2003
JJ-KYR STAB #1; 01/03; T=0 3P FLT JJ500;10% FLT DMPING;FLSH CAPS
NAV-MKP/MKP-YAV,PV-DV/NG;4C CLR FLT W/JJ-KYR;8C REIN;2012.dyd;WSCC.bpt

ALL COMMENTS RECEIVED FROM THE TSS REVIEW HAVE BEEN ADDED.
MOST RECENT VERSION OF THE MASTER DYNAMICS FILE IS USED, WHICH
CONTAINS THE NEW GOVERNOR MODELING RECEIVED IN RESPONSE TO THE
NOVEMBER 7, 2002 DATA REQUEST.

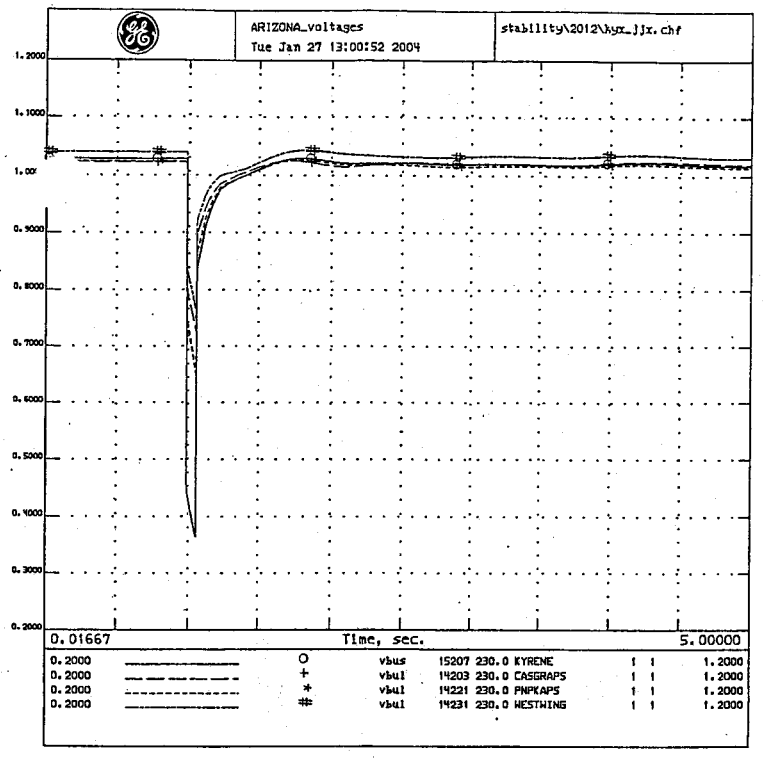

KYRENE FLT KYR-JOJOBA LINE OUT
2012 HS1A APROVED BASE CASE
MAY 19, 2003
JJ-KYR STAB #1; 01/03; T=0 3P FLT KYR500;
4C CLR FLT W/JJ-KYR;2012.dyd;WSCC.bpt

ALL COMMENTS RECEIVED FROM THE TSS REVIEW HAVE BEEN ADDED.
MOST RECENT VERSION OF THE MASTER DYNAMICS FILE IS USED, WHICH
CONTAINS THE NEW GOVERNOR MODELING RECEIVED IN RESPONSE TO THE
NOVEMBER 7, 2002 DATA REQUEST.

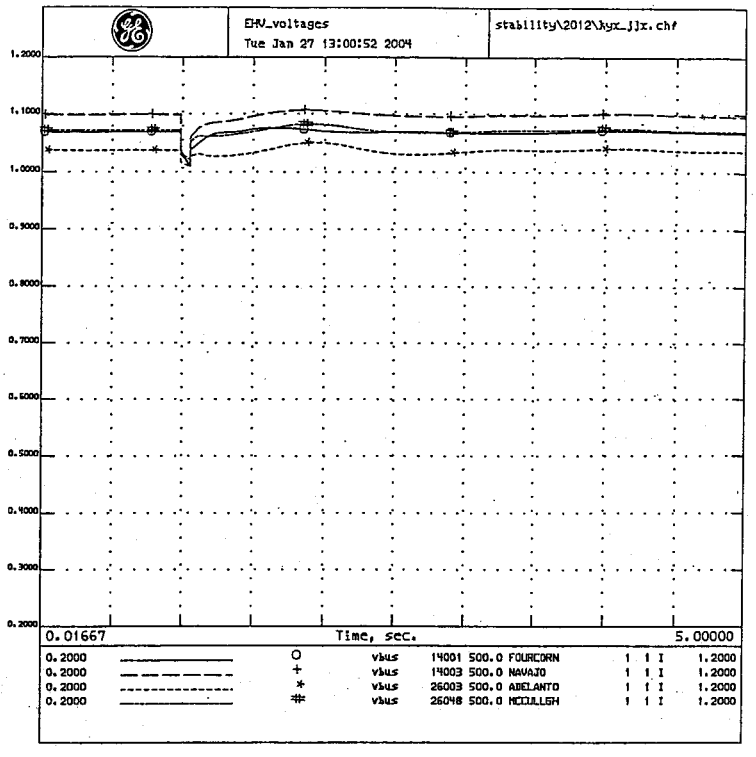

KYRENE FLT KYR-JOJOBA LINE OUT
2012 HS1A APROVED BASE CASE
MAY 19, 2003
JJ-KYR STAB #1; 01/03; T=0 3P FLT KYR500;
4C CLR FLT W/JJ-KYR;2012.dyd;WSCC.bpt

ALL COMMENTS RECEIVED FROM THE TSS REVIEW HAVE BEEN ADDED.
MOST RECENT VERSION OF THE MASTER DYNAMICS FILE IS USED, WHICH
CONTAINS THE NEW GOVERNOR MODELING RECEIVED IN RESPONSE TO THE
NOVEMBER 7, 2002 DATA REQUEST.

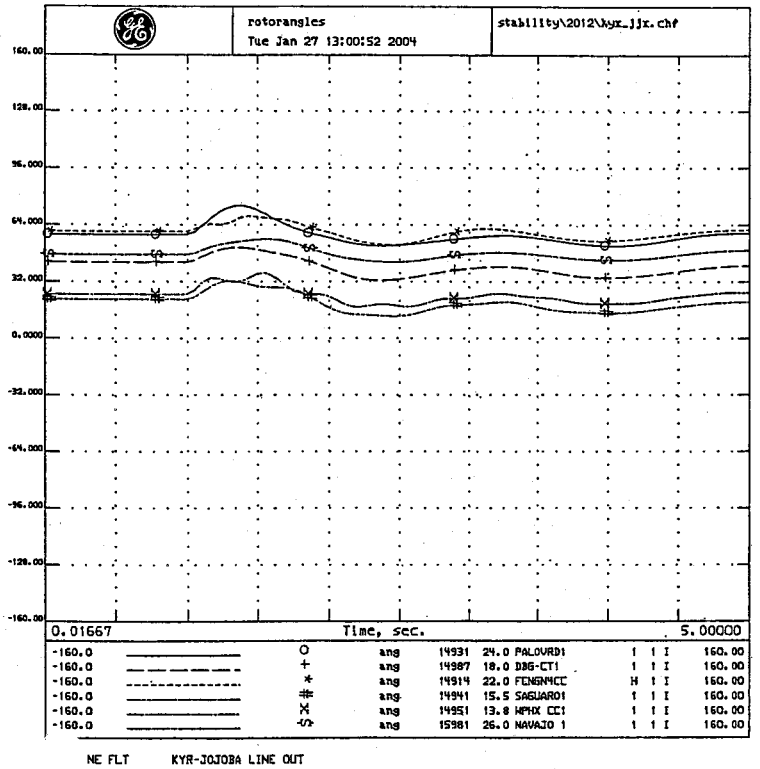

NE FLT KYR-JOJOBA LINE OUT
2 HS1A APROVED BASE CASE
MAY 19, 2003
JJ-KYR STAB #1; 01/03; T=0 3P FLT KYR500;
4C CLR FLT W/JJ-KYR;2012.dyd;WSCC.bpt

ALL COMMENTS RECEIVED FROM THE TSS REVIEW HAVE BEEN ADDED.
MOST RECENT VERSION OF THE MASTER DYNAMICS FILE IS USED, WHICH
CONTAINS THE NEW GOVERNOR MODELING RECEIVED IN RESPONSE TO THE
NOVEMBER 7, 2002 DATA REQUEST.

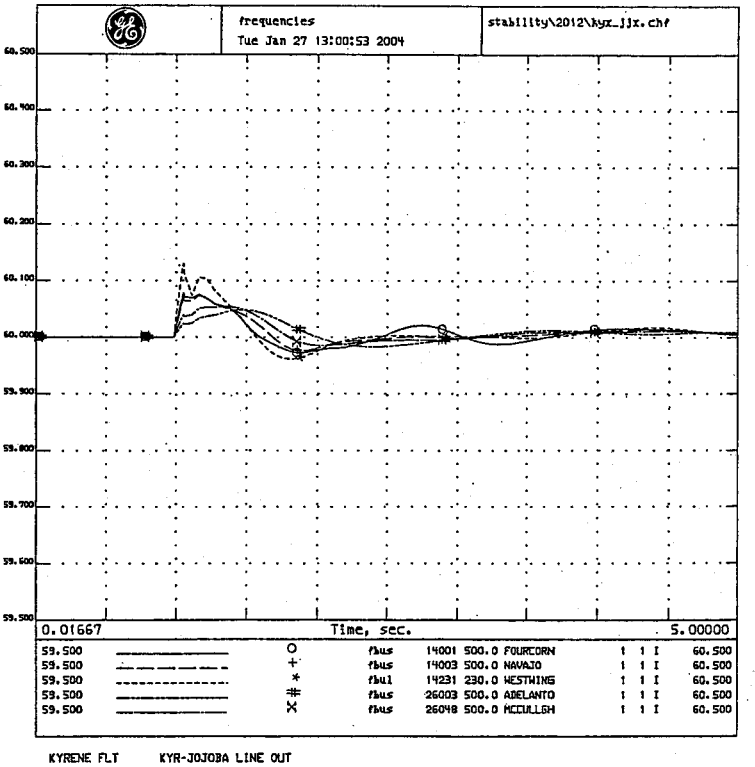

KYRENE FLT KYR-JOJOBA LINE OUT
2012 HS1A APROVED BASE CASE
MAY 19, 2003
JJ-KYR STAB #1; 01/03; T=0 3P FLT KYR500;
4C CLR FLT W/JJ-KYR;2012.dyd;WSCC.bpt

ALL COMMENTS RECEIVED FROM THE TSS REVIEW HAVE BEEN ADDED.
MOST RECENT VERSION OF THE MASTER DYNAMICS FILE IS USED, WHICH
CONTAINS THE NEW GOVERNOR MODELING RECEIVED IN RESPONSE TO THE
NOVEMBER 7, 2002 DATA REQUEST.

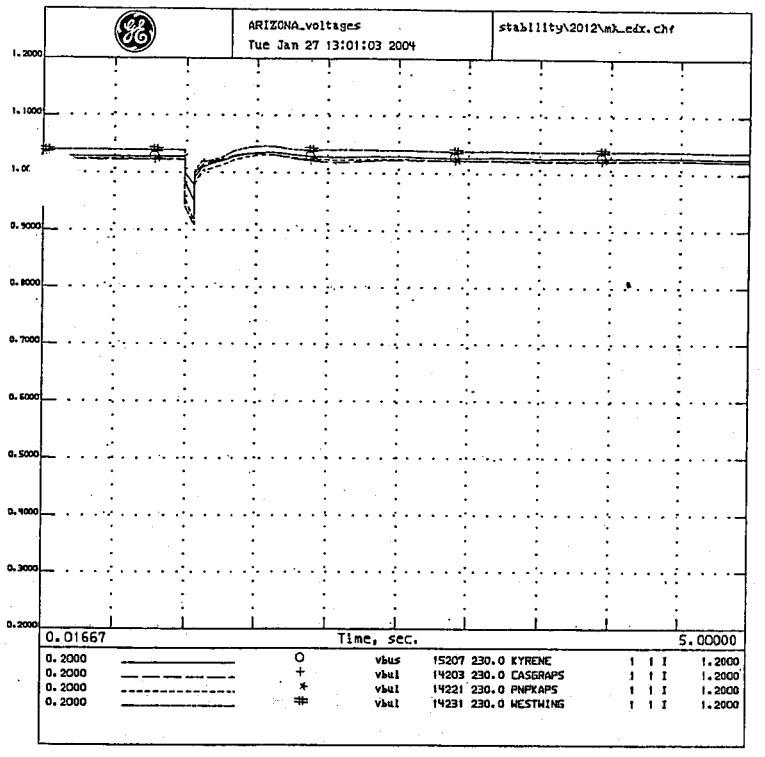

WESTERN ELECTRICITY COORDINATING COUNCIL
MKP FLT. MKP-ELD line out
MAY 19, 2003
MKP-ELD STAB; 1/03; T=0 3P FLT MKP500;FLSH CAPS MKP-YAV/YAV-WWG,
NAV-MCC/MKP,MKP-ELD;4C CLR FLT W/MKP-ELD;8C REIN;2012.dyd;WSCC.bat

ALL COMMENTS RECEIVED FROM THE TSS REVIEW HAVE BEEN ADDED.
MOST RECENT VERSION OF THE MASTER DYNAMICS FILE IS USED, WHICH
CONTAINS THE NEW GOVERNOR MODELING RECEIVED IN RESPONSE TO THE
NOVEMBER 7, 2002 DATA REQUEST.

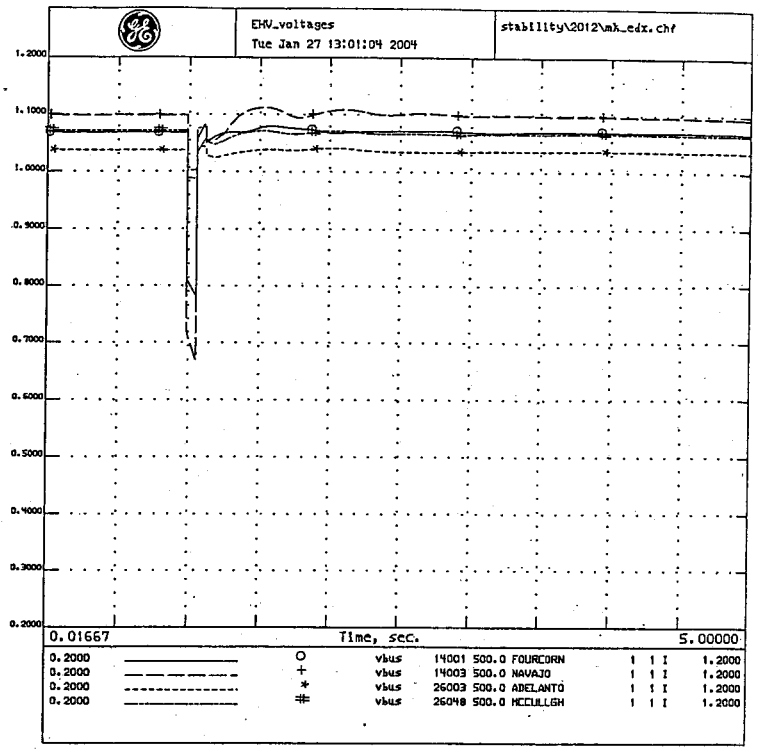

WESTERN ELECTRICITY COORDINATING COUNCIL
MKP FLT. MKP-ELD line out
MAY 19, 2003
MKP-ELD STAB; 1/03; T=0 3P FLT MKP500;FLSH CAPS MKP-YAV/YAV-WWG,
NAV-MCC/MKP,MKP-ELD;4C CLR FLT W/MKP-ELD;8C REIN;2012.dyd;WSCC.bat

ALL COMMENTS RECEIVED FROM THE TSS REVIEW HAVE BEEN ADDED.
MOST RECENT VERSION OF THE MASTER DYNAMICS FILE IS USED, WHICH
CONTAINS THE NEW GOVERNOR MODELING RECEIVED IN RESPONSE TO THE
NOVEMBER 7, 2002 DATA REQUEST.

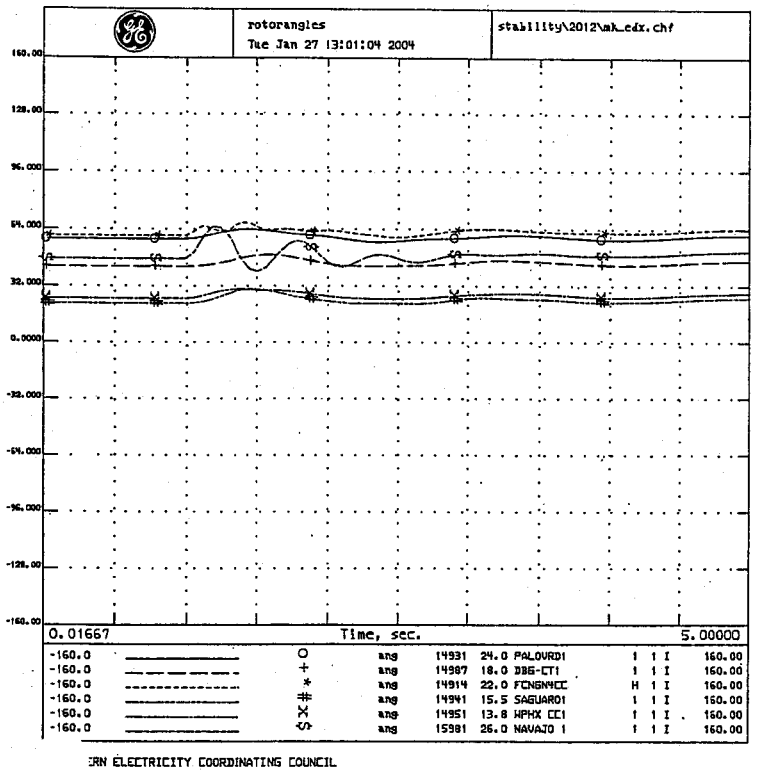

:RN ELECTRICITY COORDINATING COUNCIL
FLT. MKP-ELD line out
MAY 19, 2003
MKP-ELD STAB; 1/03; T=0 3P FLT MKP500;FLSH CAPS MKP-YAV/YAV-WWG,
NAV-MCC/MKP,MKP-ELD;4C CLR FLT W/MKP-ELD;8C REIN;2012.dyd;WSCC.bat

ALL COMMENTS RECEIVED FROM THE TSS REVIEW HAVE BEEN ADDED.
MOST RECENT VERSION OF THE MASTER DYNAMICS FILE IS USED, WHICH
CONTAINS THE NEW GOVERNOR MODELING RECEIVED IN RESPONSE TO THE
NOVEMBER 7, 2002 DATA REQUEST.

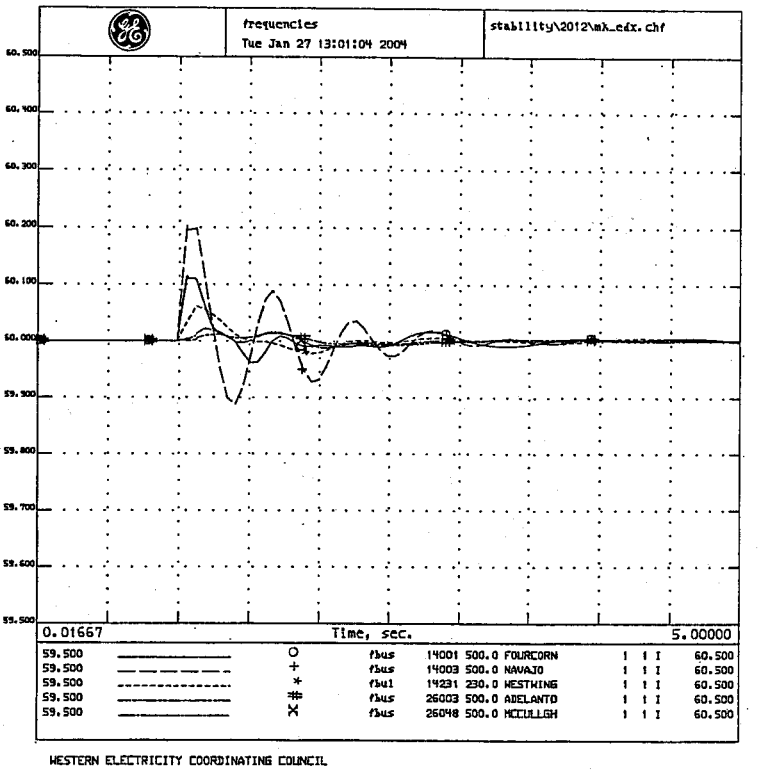

WESTERN ELECTRICITY COORDINATING COUNCIL
MKP FLT. MKP-ELD line out
MAY 19, 2003
MKP-ELD STAB; 1/03; T=0 3P FLT MKP500;FLSH CAPS MKP-YAV/YAV-WWG,
NAV-MCC/MKP,MKP-ELD;4C CLR FLT W/MKP-ELD;8C REIN;2012.dyd;WSCC.bat

ALL COMMENTS RECEIVED FROM THE TSS REVIEW HAVE BEEN ADDED.
MOST RECENT VERSION OF THE MASTER DYNAMICS FILE IS USED, WHICH
CONTAINS THE NEW GOVERNOR MODELING RECEIVED IN RESPONSE TO THE
NOVEMBER 7, 2002 DATA REQUEST.

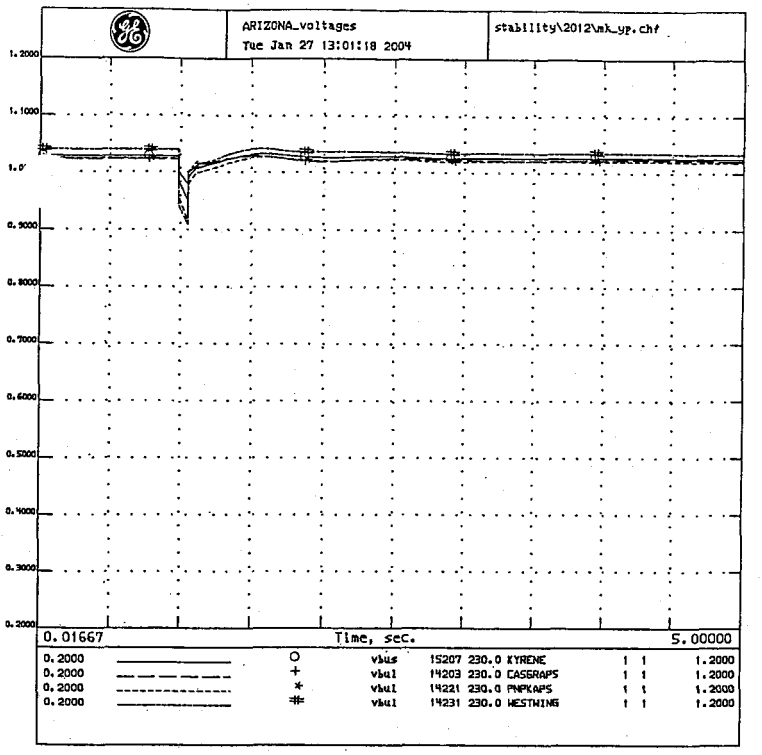

MKP. FLT MKP-YAV line out
2012 HS1A APROVED BASE CASE
MAY 19, 2003
MKP-YAV STAB; 1/03; T=0 3P FLT MKP500;FLSH CAPS MKP-YAV/YAV-WWG,
NAV-MCC/MKP,MKP-ELD;4C CLR FLT W/MKP-YAV;8C REIN;2012.dyd;WSCC.bat

ALL COMMENTS RECEIVED FROM THE TSS REVIEW HAVE BEEN ADDED.
MOST RECENT VERSION OF THE MASTER DYNAMICS FILE IS USED, WHICH
CONTAINS THE NEW GOVERNOR MODELING RECEIVED IN RESPONSE TO THE
NOVEMBER 7, 2002 DATA REQUEST.

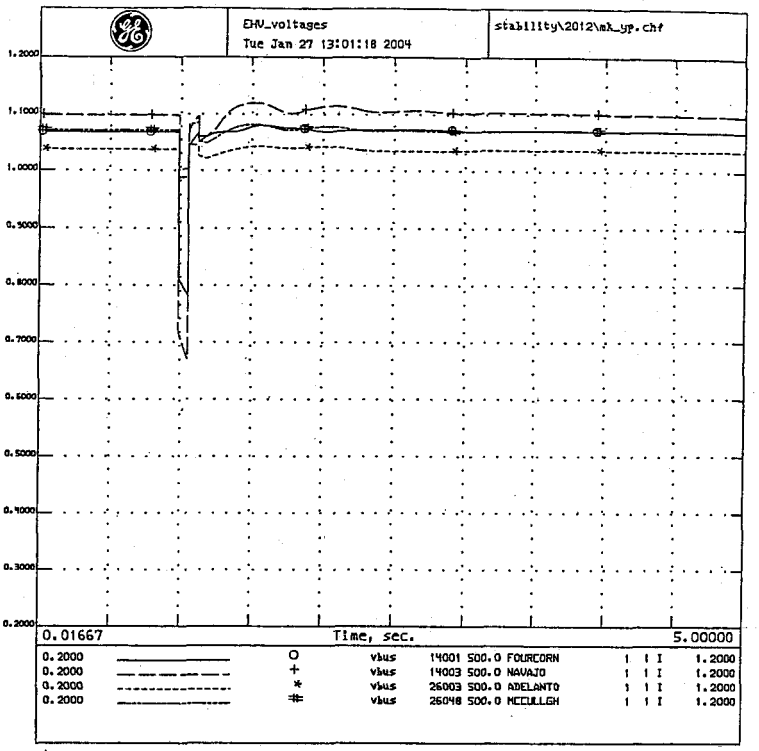

MKP. FLT MKP-YAV line out
2012 HS1A APROVED BASE CASE
MAY 19, 2003
MKP-YAV STAB; 1/03; T=0 3P FLT MKP500;FLSH CAPS MKP-YAV/YAV-WWG,
NAV-MCC/MKP,MKP-ELD;4C CLR FLT W/MKP-YAV;8C REIN;2012.dyd;WSCC.bat

ALL COMMENTS RECEIVED FROM THE TSS REVIEW HAVE BEEN ADDED.
MOST RECENT VERSION OF THE MASTER DYNAMICS FILE IS USED, WHICH
CONTAINS THE NEW GOVERNOR MODELING RECEIVED IN RESPONSE TO THE
NOVEMBER 7, 2002 DATA REQUEST.

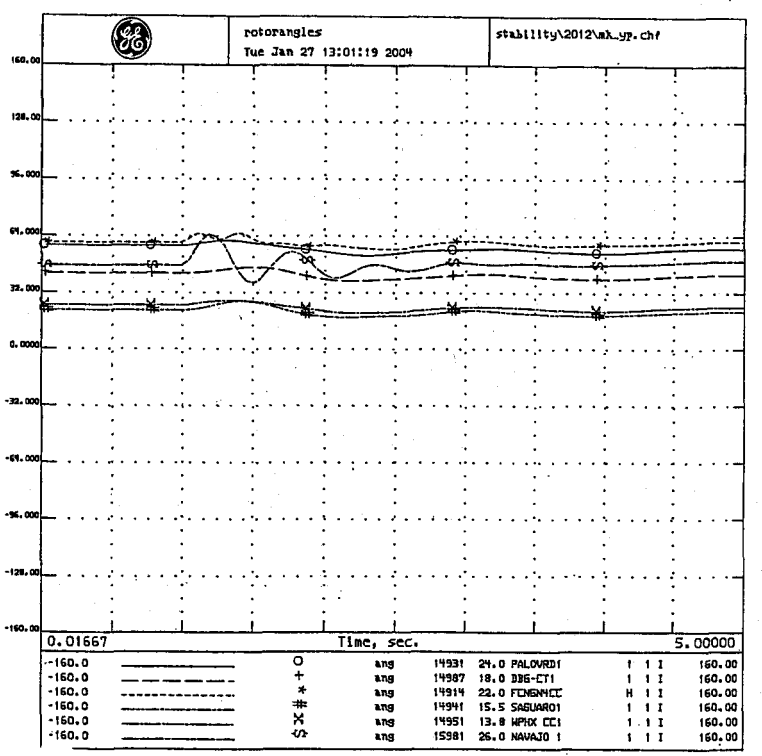

FLT MKP-YAV line out
2 HS1A APROVED BASE CASE
MAY 19, 2003
MKP-YAV STAB; 1/03; T=0 3P FLT MKP500;FLSH CAPS MKP-YAV/YAV-WWG,
NAV-MCC/MKP,MKP-ELD;4C CLR FLT W/MKP-YAV;8C REIN;2012.dyd;WSCC.bat

ALL COMMENTS RECEIVED FROM THE TSS REVIEW HAVE BEEN ADDED.
MOST RECENT VERSION OF THE MASTER DYNAMICS FILE IS USED, WHICH
CONTAINS THE NEW GOVERNOR MODELING RECEIVED IN RESPONSE TO THE
NOVEMBER 7, 2002 DATA REQUEST.

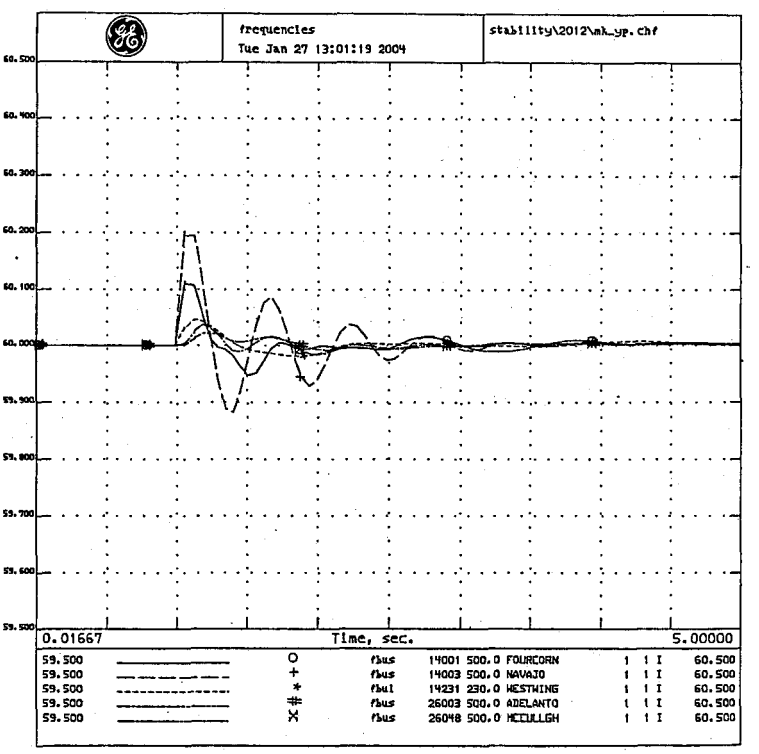

MKP. FLT MKP-YAV line out
2012 HS1A APROVED BASE CASE
MAY 19, 2003
MKP-YAV STAB; 1/03; T=0 3P FLT MKP500;FLSH CAPS MKP-YAV/YAV-WWG,
NAV-MCC/MKP,MKP-ELD;4C CLR FLT W/MKP-YAV;8C REIN;2012.dyd;WSCC.bat

ALL COMMENTS RECEIVED FROM THE TSS REVIEW HAVE BEEN ADDED.
MOST RECENT VERSION OF THE MASTER DYNAMICS FILE IS USED, WHICH
CONTAINS THE NEW GOVERNOR MODELING RECEIVED IN RESPONSE TO THE
NOVEMBER 7, 2002 DATA REQUEST.

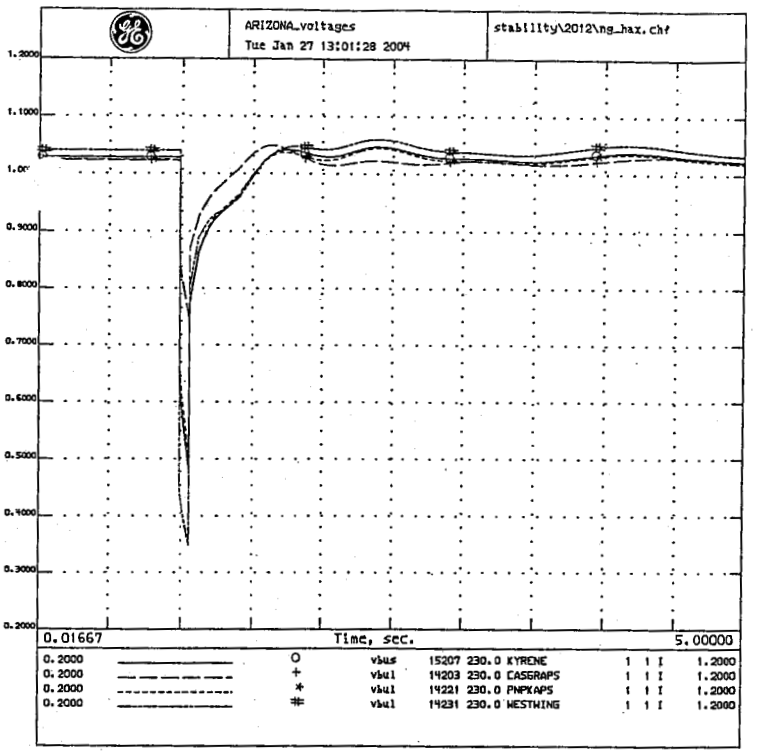

N.GILA FLT N.GILA-HASSY LINE OUT
2012 HS1A APROVED BASE CASE
MAY 19, 2003
N.GILA STAB,3 PH FLT N.GILA 500KV
FLASH CAPS,4/4 CYC CLR FLT;HASSAYMPA-NG OUT;4/8 CYC REIN CAPS

ALL COMMENTS RECEIVED FROM THE TSS REVIEW HAVE BEEN ADDED.
MOST RECENT VERSION OF THE MASTER DYNAMICS FILE IS USED, WHICH
CONTAINS THE NEW GOVERNOR MODELING RECEIVED IN RESPONSE TO THE
NOVEMBER 7, 2002 DATA REQUEST.

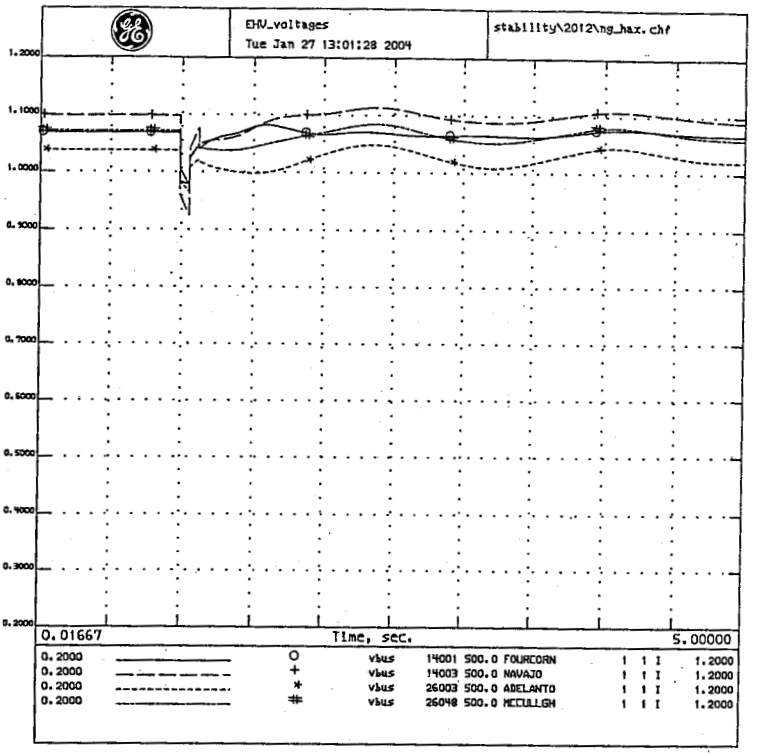

N.GILA FLT N.GILA-HASSY LINE OUT
2012 HS1A APROVED BASE CASE
MAY 19, 2003
N.GILA STAB,3 PH FLT N.GILA 500KV
FLASH CAPS,4/4 CYC CLR FLT;HASSAYMPA-NG OUT;4/8 CYC REIN CAPS

ALL COMMENTS RECEIVED FROM THE TSS REVIEW HAVE BEEN ADDED.
MOST RECENT VERSION OF THE MASTER DYNAMICS FILE IS USED, WHICH
CONTAINS THE NEW GOVERNOR MODELING RECEIVED IN RESPONSE TO THE
NOVEMBER 7, 2002 DATA REQUEST.

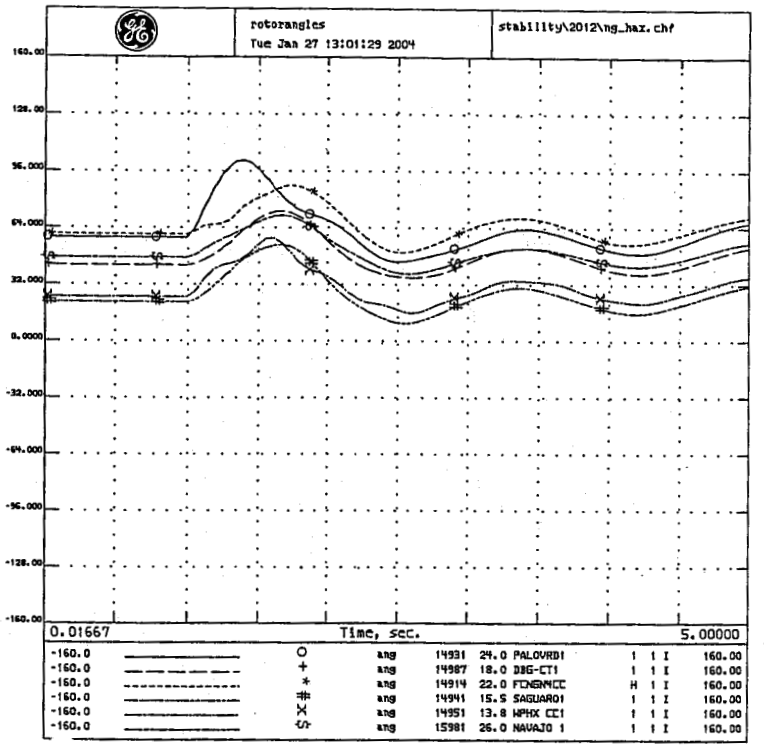

A FLT N.GILA-HASSY LINE OUT
HS1A APROVED BASE CASE
MAY 19, 2003
N.GILA STAB,3 PH FLT N.GILA 500KV
FLASH CAPS,4/4 CYC CLR FLT;HASSAYMPA-NG OUT;4/8 CYC REIN CAPS

ALL COMMENTS RECEIVED FROM THE TSS REVIEW HAVE BEEN ADDED.
MOST RECENT VERSION OF THE MASTER DYNAMICS FILE IS USED, WHICH
CONTAINS THE NEW GOVERNOR MODELING RECEIVED IN RESPONSE TO THE
NOVEMBER 7, 2002 DATA REQUEST.

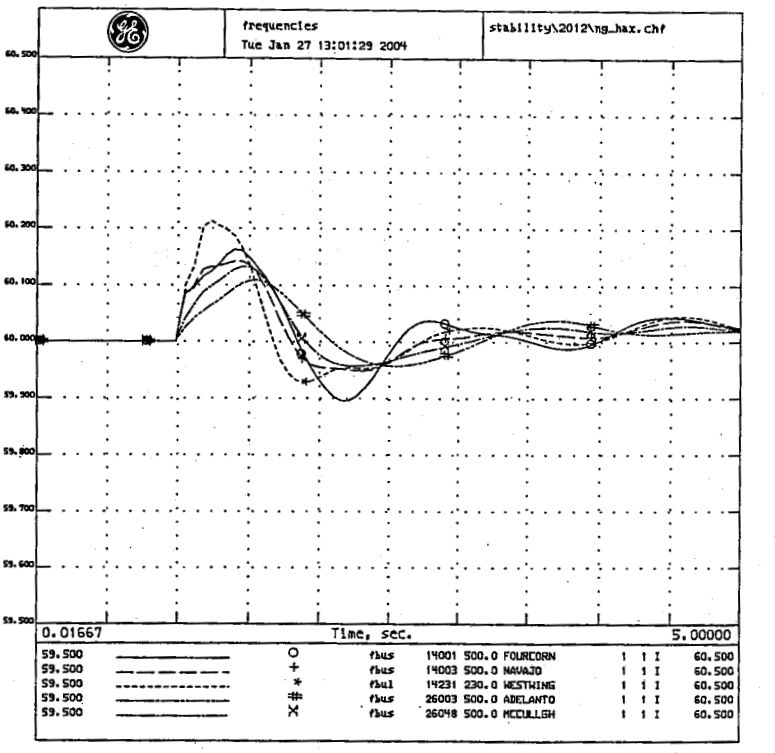

N.GILA FLT N.GILA-HASSY LINE OUT
2012 HS1A APROVED BASE CASE
MAY 19, 2003
N.GILA STAB,3 PH FLT N.GILA 500KV
FLASH CAPS,4/4 CYC CLR FLT;HASSAYMPA-NG OUT;4/8 CYC REIN CAPS

ALL COMMENTS RECEIVED FROM THE TSS REVIEW HAVE BEEN ADDED.
MOST RECENT VERSION OF THE MASTER DYNAMICS FILE IS USED, WHICH
CONTAINS THE NEW GOVERNOR MODELING RECEIVED IN RESPONSE TO THE
NOVEMBER 7, 2002 DATA REQUEST.

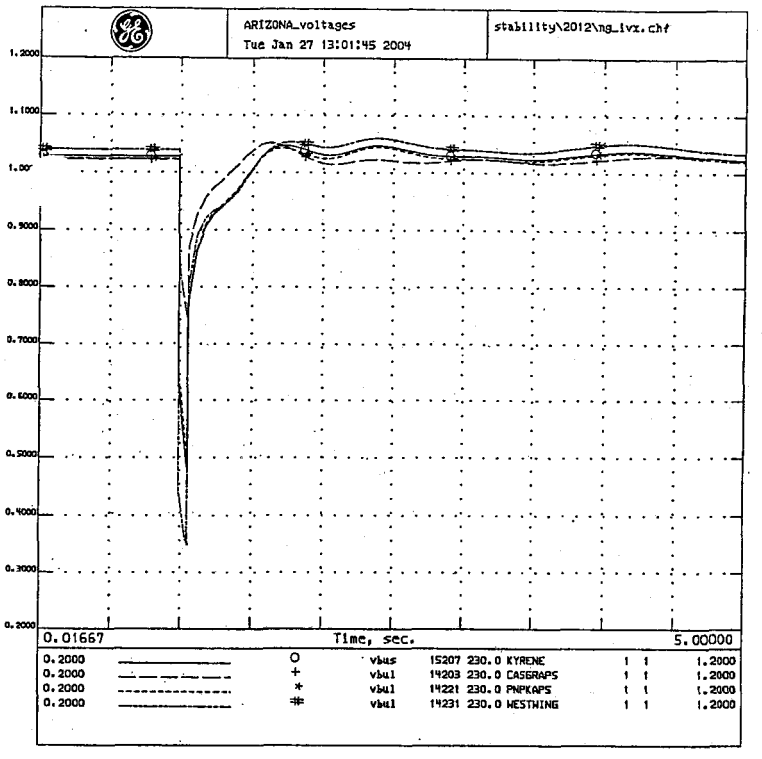

N.GILA FLT N.GILA-IMP. V LINE OUT
2012 HS1A APROVED BASE CASE
MAY 19, 2003
N.GILA STAB,3 PH FLT N.GILA 500KV
FLASH CAPS,W/4 CYC CLR FLT;IMPV-NG OUT;4/8 CYC REIN CAPS

ALL COMMENTS RECEIVED FROM THE TSS REVIEW HAVE BEEN ADDED.
MOST RECENT VERSION OF THE MASTER DYNAMICS FILE IS USED, WHICH
CONTAINS THE NEW GOVERNOR MODELING RECEIVED IN RESPONSE TO THE
NOVEMBER 7, 2002 DATA REQUEST.

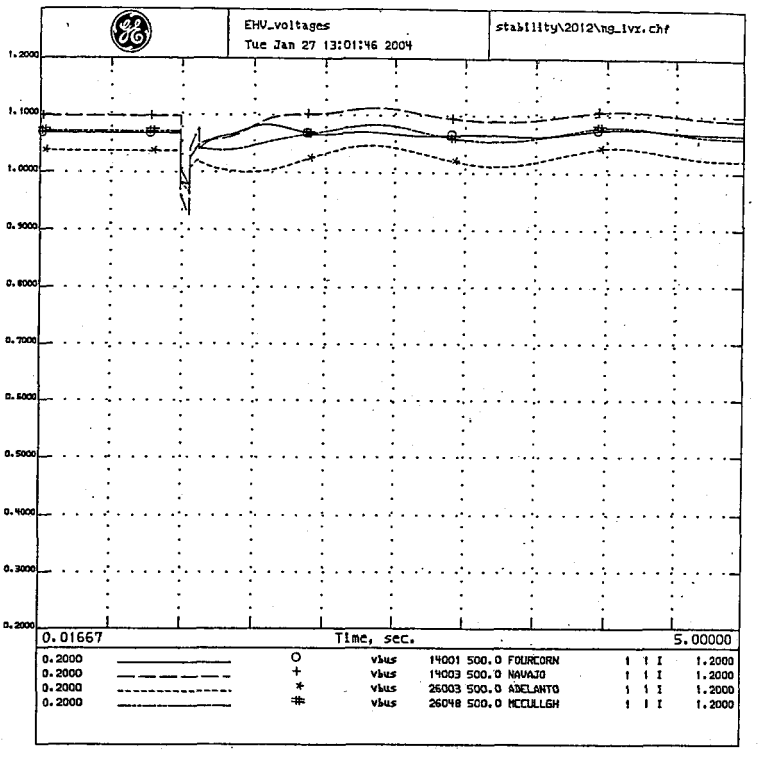

N.GILA FLT N.GILA-IMP. V LINE OUT
2012 HS1A APROVED BASE CASE
MAY 19, 2003
N.GILA STAB,3 PH FLT N.GILA 500KV
FLASH CAPS,W/4 CYC CLR FLT;IMPV-NG OUT;4/8 CYC REIN CAPS

ALL COMMENTS RECEIVED FROM THE TSS REVIEW HAVE BEEN ADDED.
MOST RECENT VERSION OF THE MASTER DYNAMICS FILE IS USED, WHICH
CONTAINS THE NEW GOVERNOR MODELING RECEIVED IN RESPONSE TO THE
NOVEMBER 7, 2002 DATA REQUEST.

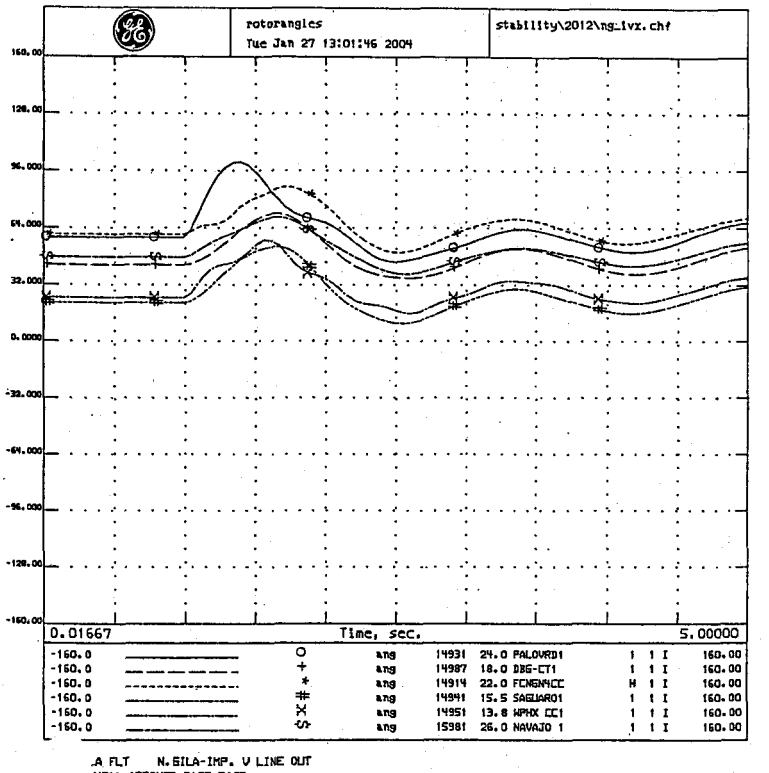

A FLT N.GILA-IMP. V LINE OUT
HS1A APROVED BASE CASE
MAY 19, 2003
N.GILA STAB,3 PH FLT N.GILA 500KV
FLASH CAPS,W/4 CYC CLR FLT;IMPV-NG OUT;4/8 CYC REIN CAPS

ALL COMMENTS RECEIVED FROM THE TSS REVIEW HAVE BEEN ADDED.
MOST RECENT VERSION OF THE MASTER DYNAMICS FILE IS USED, WHICH
CONTAINS THE NEW GOVERNOR MODELING RECEIVED IN RESPONSE TO THE
NOVEMBER 7, 2002 DATA REQUEST.

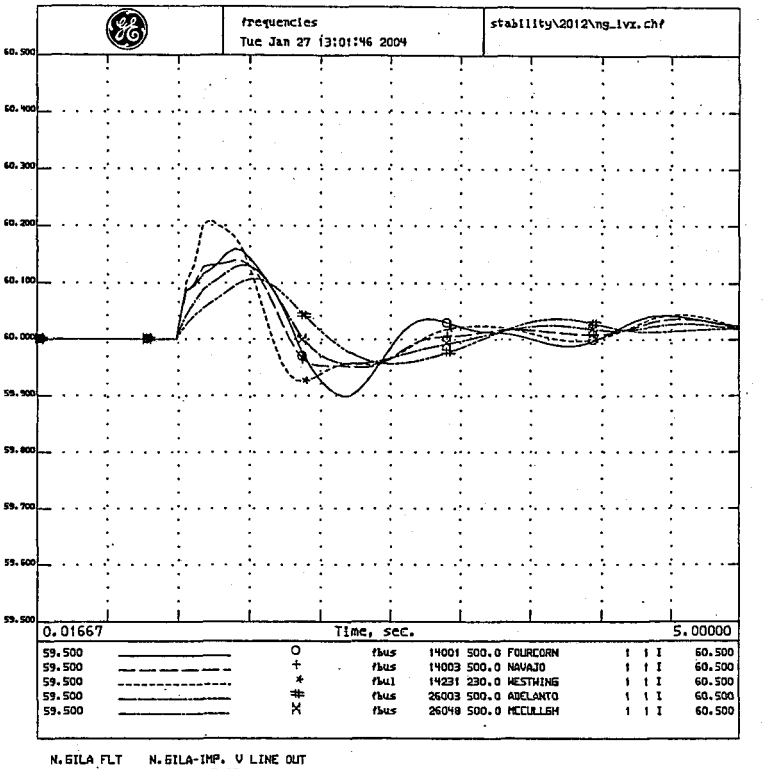

N.GILA FLT N.GILA-IMP. V LINE OUT
2012 HS1A APROVED BASE CASE
MAY 19, 2003
N.GILA STAB,3 PH FLT N.GILA 500KV
FLASH CAPS,W/4 CYC CLR FLT;IMPV-NG OUT;4/8 CYC REIN CAPS

ALL COMMENTS RECEIVED FROM THE TSS REVIEW HAVE BEEN ADDED.
MOST RECENT VERSION OF THE MASTER DYNAMICS FILE IS USED, WHICH
CONTAINS THE NEW GOVERNOR MODELING RECEIVED IN RESPONSE TO THE
NOVEMBER 7, 2002 DATA REQUEST.

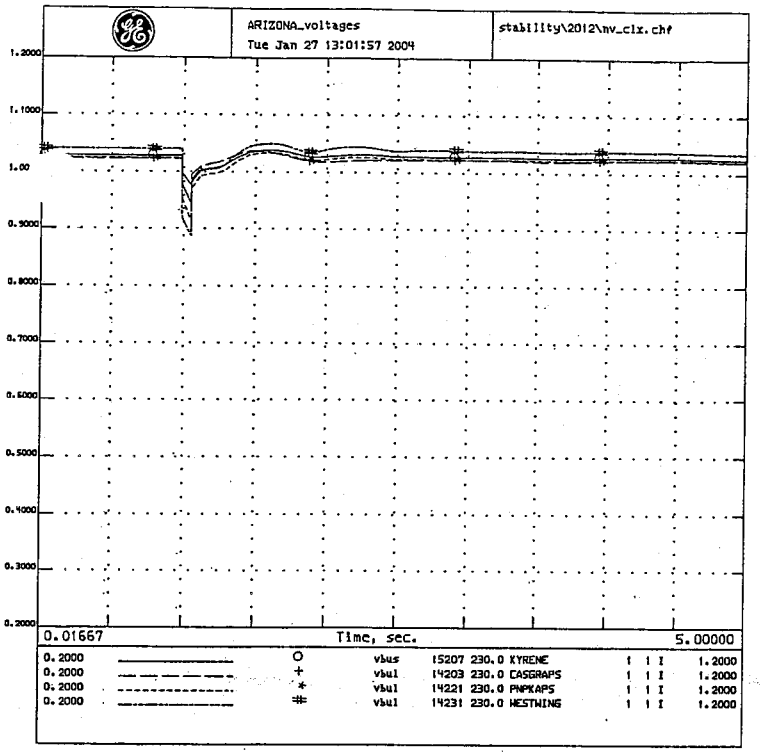

WESTERN ELECTRICITY COORDINATING COUNCIL
NAV. FLT. Nav-Crystal line out
MAY 19, 2003
NAV-CRYS STAB; 1/03; T=0 3P FLT NAV500; 6% FLT DMPING;FLSH CAPS
NAV-MCC/MKP,MKP-ELD;4C CLR FLT W/NAV-CRYS;8C REIN;2012.dyd;WSCC.bat

ALL COMMENTS RECEIVED FROM THE TSS REVIEW HAVE BEEN ADDED.
MOST RECENT VERSION OF THE MASTER DYNAMICS FILE IS USED, WHICH
CONTAINS THE NEW GOVERNOR MODELING RECEIVED IN RESPONSE TO THE
NOVEMBER 7, 2002 DATA REQUEST.

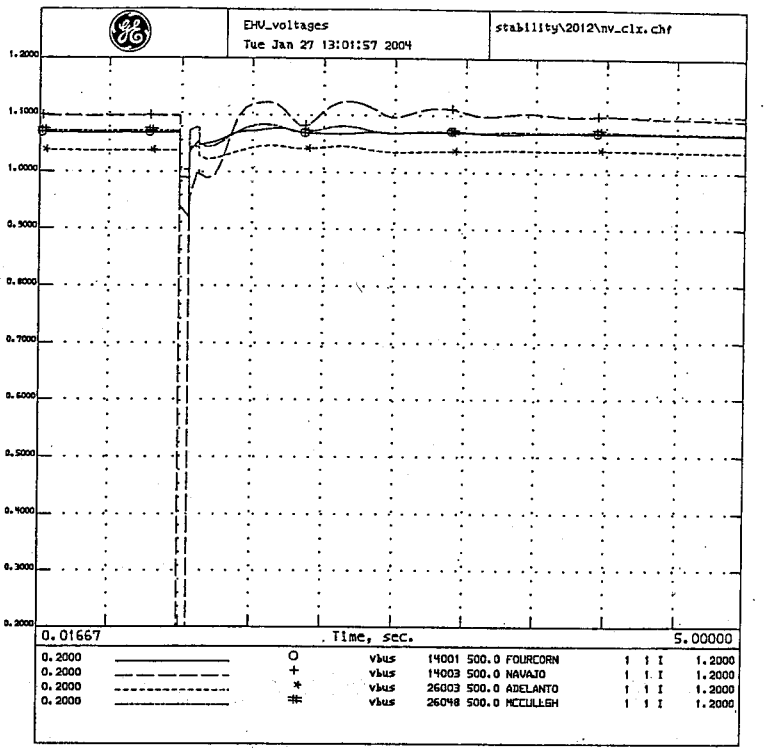

WESTERN ELECTRICITY COORDINATING COUNCIL
NAV. FLT. Nav-Crystal line out
MAY 19, 2003
NAV-CRYS STAB; 1/03; T=0 3P FLT NAV500; 6% FLT DMPING;FLSH CAPS
NAV-MCC/MKP,MKP-ELD;4C CLR FLT W/NAV-CRYS;8C REIN;2012.dyd;WSCC.bat

ALL COMMENTS RECEIVED FROM THE TSS REVIEW HAVE BEEN ADDED.
MOST RECENT VERSION OF THE MASTER DYNAMICS FILE IS USED, WHICH
CONTAINS THE NEW GOVERNOR MODELING RECEIVED IN RESPONSE TO THE
NOVEMBER 7, 2002 DATA REQUEST.

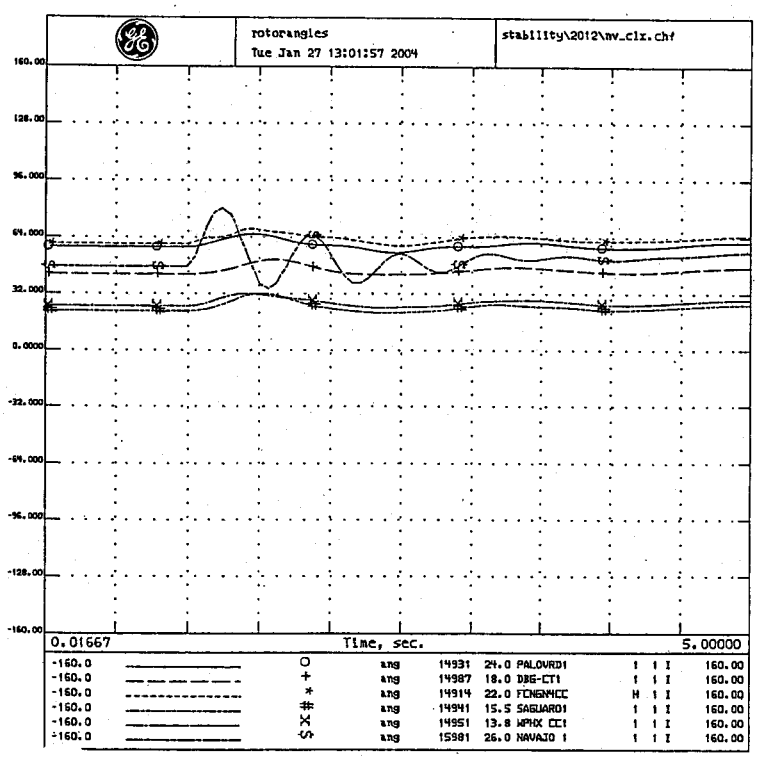

ERN ELECTRICITY COORDINATING COUNCIL
FLT. Nav-Crystal line out
MAY 19, 2003
NAV-CRYS STAB; 1/03; T=0 3P FLT NAV500; 6% FLT DMPING;FLSH CAPS
NAV-MCC/MKP,MKP-ELD;4C CLR FLT W/NAV-CRYS;8C REIN;2012.dyd;WSCC.bat

ALL COMMENTS RECEIVED FROM THE TSS REVIEW HAVE BEEN ADDED.
MOST RECENT VERSION OF THE MASTER DYNAMICS FILE IS USED, WHICH
CONTAINS THE NEW GOVERNOR MODELING RECEIVED IN RESPONSE TO THE
NOVEMBER 7, 2002 DATA REQUEST.

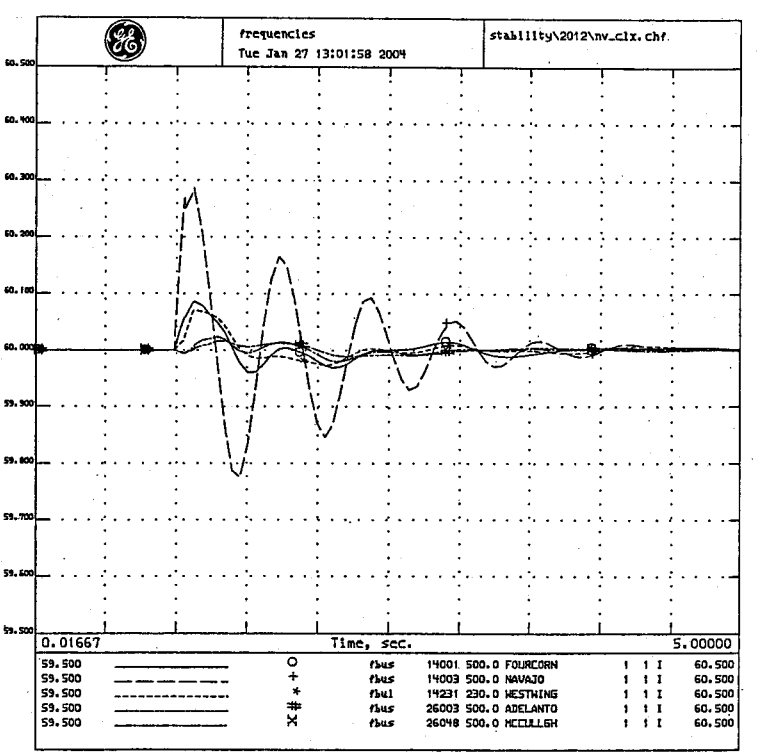

WESTERN ELECTRICITY COORDINATING COUNCIL
NAV. FLT. Nav-Crystal line out
MAY 19, 2003
NAV-CRYS STAB; 1/03; T=0 3P FLT NAV500; 6% FLT DMPING;FLSH CAPS
NAV-MCC/MKP,MKP-ELD;4C CLR FLT W/NAV-CRYS;8C REIN;2012.dyd;WSCC.bat

ALL COMMENTS RECEIVED FROM THE TSS REVIEW HAVE BEEN ADDED.
MOST RECENT VERSION OF THE MASTER DYNAMICS FILE IS USED, WHICH
CONTAINS THE NEW GOVERNOR MODELING RECEIVED IN RESPONSE TO THE
NOVEMBER 7, 2002 DATA REQUEST.

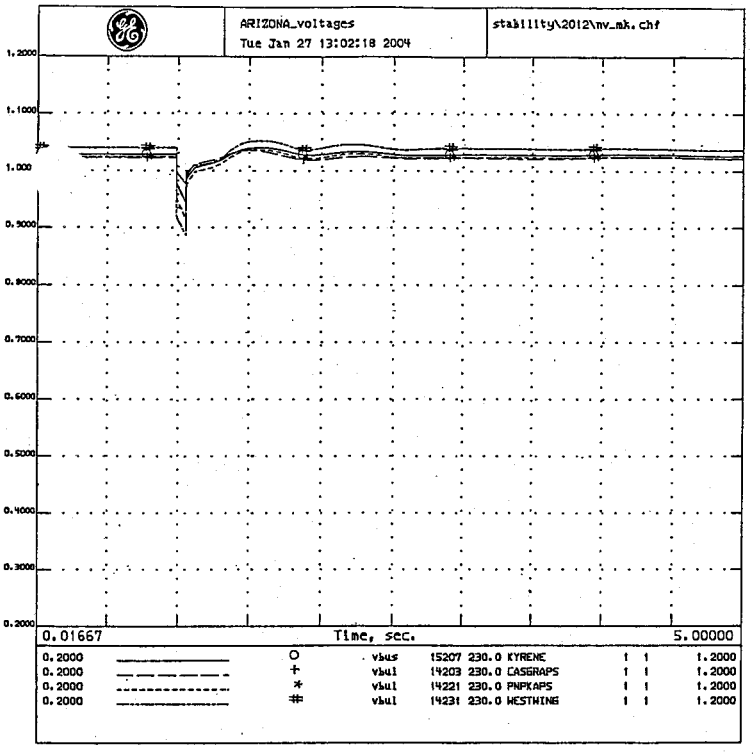

WESTERN ELECTRICITY COORDINATING COUNCIL
NAV. FLT. Navjo-Mnk. line out
MAY 19, 2003
NAV-MKP STAB; 1/03; T=0 3P FLT NAV500; 6% FLT DMPING;FLSH CAPS
NAV-MCC/MKP,MKP-ELD;4C CLR FLT W/NAV-MKP;8C REIN;2012.dyd;WSCC.bat

ALL COMMENTS RECEIVED FROM THE TSS REVIEW HAVE BEEN ADDED.
MOST RECENT VERSION OF THE MASTER DYNAMICS FILE IS USED, WHICH
CONTAINS THE NEW GOVERNOR MODELING RECEIVED IN RESPONSE TO THE
NOVEMBER 7, 2002 DATA REQUEST.

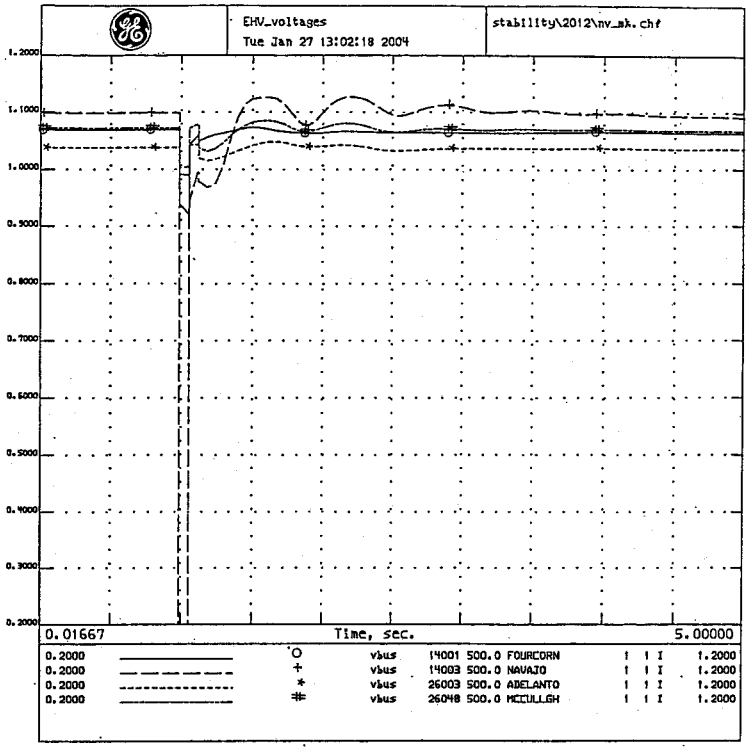

WESTERN ELECTRICITY COORDINATING COUNCIL
NAV. FLT. Navjo-Mnk. line out
MAY 19, 2003
NAV-MKP STAB; 1/03; T=0 3P FLT NAV500; 6% FLT DMPING;FLSH CAPS
NAV-MCC/MKP,MKP-ELD;4C CLR FLT W/NAV-MKP;8C REIN;2012.dyd;WSCC.bat

ALL COMMENTS RECEIVED FROM THE TSS REVIEW HAVE BEEN ADDED.
MOST RECENT VERSION OF THE MASTER DYNAMICS FILE IS USED, WHICH
CONTAINS THE NEW GOVERNOR MODELING RECEIVED IN RESPONSE TO THE
NOVEMBER 7, 2002 DATA REQUEST.

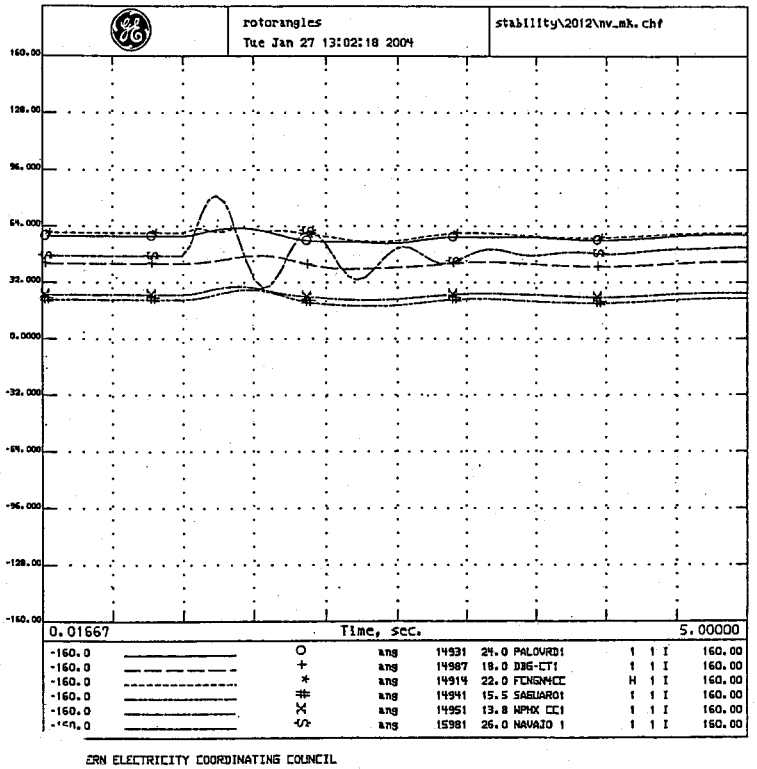

ERN ELECTRICITY COORDINATING COUNCIL
. FLT. Navjo-Mnk. line out
MAY 19, 2003
NAV-MKP STAB; 1/03; T=0 3P FLT NAV500; 6% FLT DMPING;FLSH CAPS
NAV-MCC/MKP,MKP-ELD;4C CLR FLT W/NAV-MKP;8C REIN;2012.dyd;WSCC.bat

ALL COMMENTS RECEIVED FROM THE TSS REVIEW HAVE BEEN ADDED.
MOST RECENT VERSION OF THE MASTER DYNAMICS FILE IS USED, WHICH
CONTAINS THE NEW GOVERNOR MODELING RECEIVED IN RESPONSE TO THE
NOVEMBER 7, 2002 DATA REQUEST.

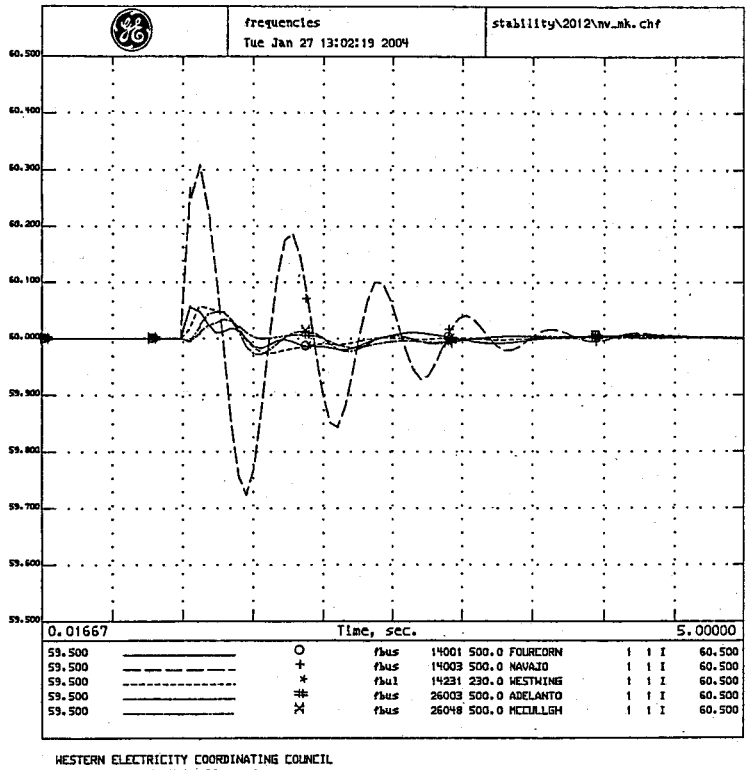

WESTERN ELECTRICITY COORDINATING COUNCIL
NAV. FLT. Navjo-Mnk. line out
MAY 19, 2003
NAV-MKP STAB; 1/03; T=0 3P FLT NAV500; 6% FLT DMPING;FLSH CAPS
NAV-MCC/MKP,MKP-ELD;4C CLR FLT W/NAV-MKP;8C REIN;2012.dyd;WSCC.bat

ALL COMMENTS RECEIVED FROM THE TSS REVIEW HAVE BEEN ADDED.
MOST RECENT VERSION OF THE MASTER DYNAMICS FILE IS USED, WHICH
CONTAINS THE NEW GOVERNOR MODELING RECEIVED IN RESPONSE TO THE
NOVEMBER 7, 2002 DATA REQUEST.

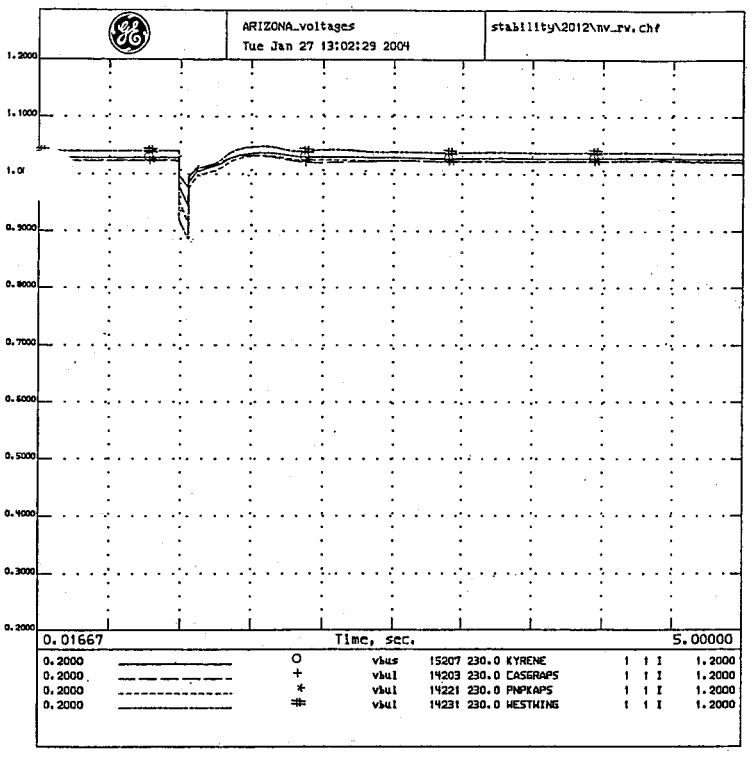

NAV FLT NAV-RW LINE OUT
2012 HS1A APROVED BASE CASE
MAY 19, 2003
NAV-RWY STAB; 1/03; T=0 3P FLT NAV500; 6% FLT DMPING;FLSH CAPS
NAV-MCC/MKP,MKP-ELD;4C CLR FLT W/NAV-RWY;8C REIN;2012.dyd;HSCC.bat

ALL COMMENTS RECEIVED FROM THE TSS REVIEW HAVE BEEN ADDED.
MOST RECENT VERSION OF THE MASTER DYNAMICS FILE IS USED, WHICH
CONTAINS THE NEW GOVERNOR MODELING RECEIVED IN RESPONSE TO THE
NOVEMBER 7, 2002 DATA REQUEST.

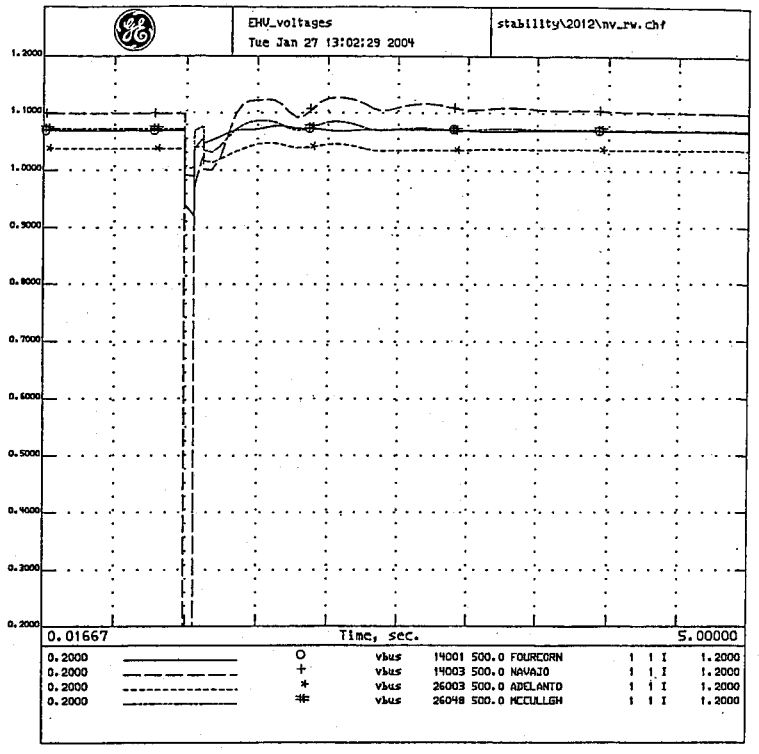

NAV FLT NAV-RW LINE OUT
2012 HS1A APROVED BASE CASE
MAY 19, 2003
NAV-RWY STAB; 1/03; T=0 3P FLT NAV500; 6% FLT DMPING;FLSH CAPS
NAV-MCC/MKP,MKP-ELD;4C CLR FLT W/NAV-RWY;8C REIN;2012.dyd;HSCC.bat

ALL COMMENTS RECEIVED FROM THE TSS REVIEW HAVE BEEN ADDED.
MOST RECENT VERSION OF THE MASTER DYNAMICS FILE IS USED, WHICH
CONTAINS THE NEW GOVERNOR MODELING RECEIVED IN RESPONSE TO THE
NOVEMBER 7, 2002 DATA REQUEST.

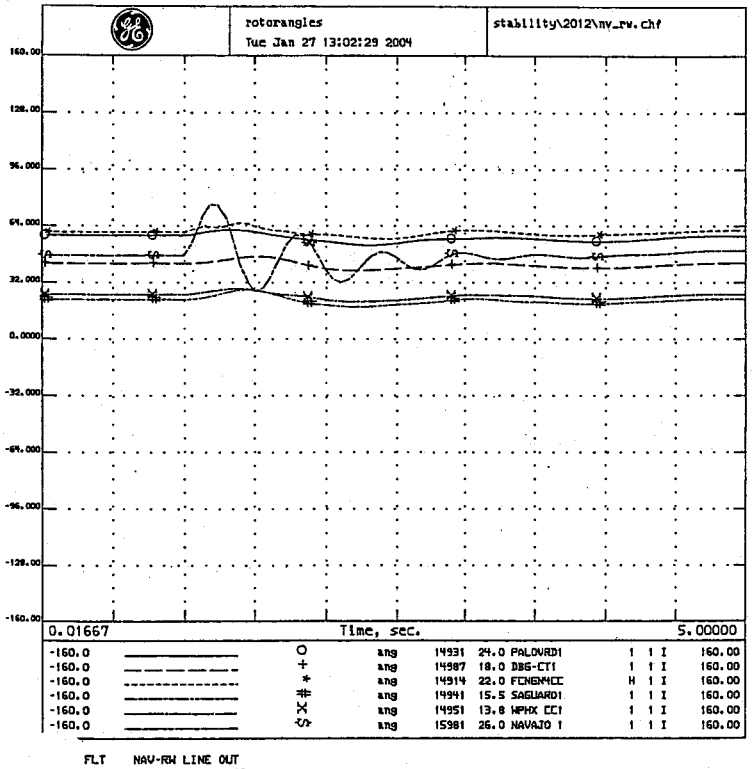

FLT NAV-RW LINE OUT
.2 HS1A APROVED BASE CASE
MAY 19, 2003
NAV-RWY STAB; 1/03; T=0 3P FLT NAV500; 6% FLT DMPING;FLSH CAPS
NAV-MCC/MKP,MKP-ELD;4C CLR FLT W/NAV-RWY;8C REIN;2012.dyd;HSCC.bat

ALL COMMENTS RECEIVED FROM THE TSS REVIEW HAVE BEEN ADDED.
MOST RECENT VERSION OF THE MASTER DYNAMICS FILE IS USED, WHICH
CONTAINS THE NEW GOVERNOR MODELING RECEIVED IN RESPONSE TO THE
NOVEMBER 7, 2002 DATA REQUEST.

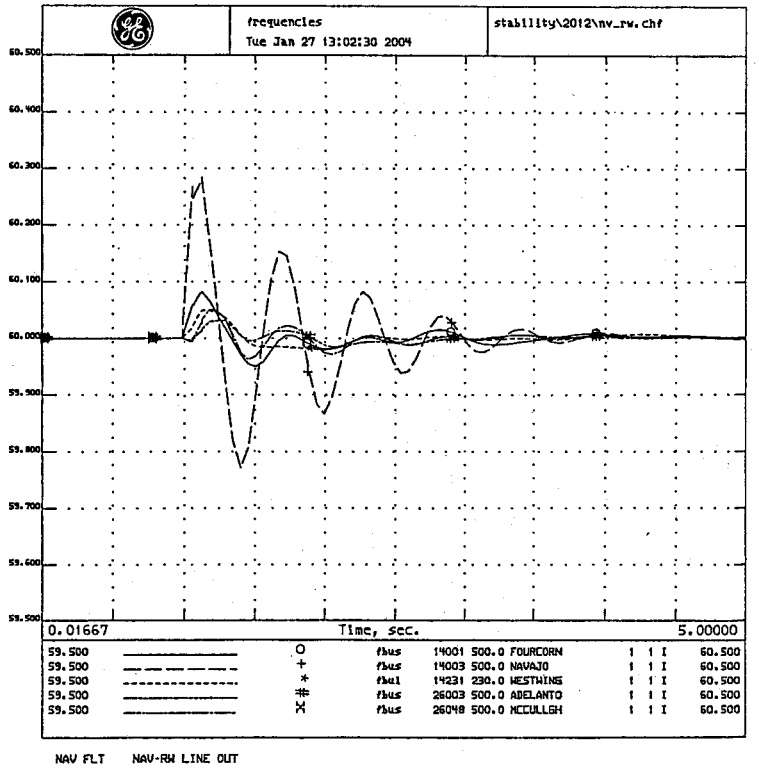

NAV FLT NAV-RW LINE OUT
2012 HS1A APROVED BASE CASE
MAY 19, 2003
NAV-RWY STAB; 1/03; T=0 3P FLT NAV500; 6% FLT DMPING;FLSH CAPS
NAV-MCC/MKP,MKP-ELD;4C CLR FLT W/NAV-RWY;8C REIN;2012.dyd;HSCC.bat

ALL COMMENTS RECEIVED FROM THE TSS REVIEW HAVE BEEN ADDED.
MOST RECENT VERSION OF THE MASTER DYNAMICS FILE IS USED, WHICH
CONTAINS THE NEW GOVERNOR MODELING RECEIVED IN RESPONSE TO THE
NOVEMBER 7, 2002 DATA REQUEST.

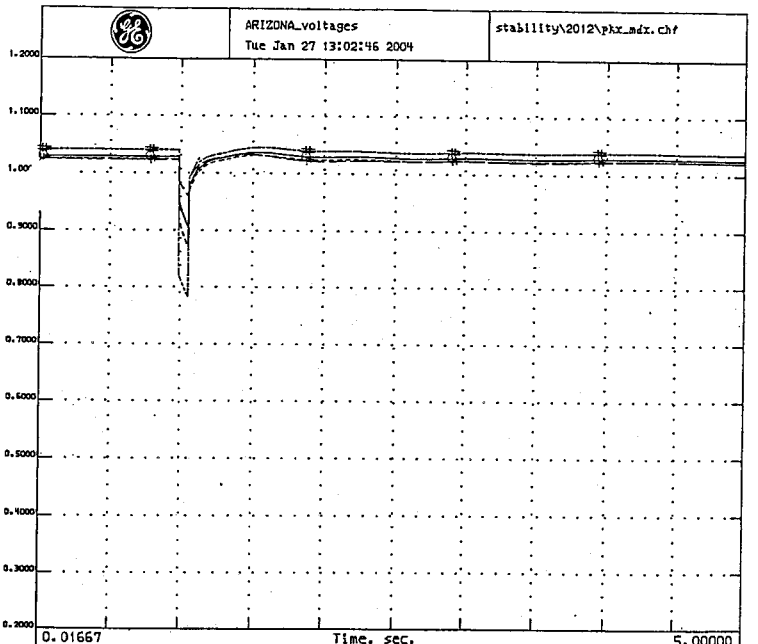

0.2000	———	O	vbus	15207	230.0	KYRENE	1	1	1.2000
0.2000	— — — —	+	vbul	14203	230.0	CASGRAPS	1	1	1.2000
0.2000	- - - - -	*	vbul	14221	230.0	PNPKAPS	1	1	1.2000
0.2000	———	#	vbul	14231	230.0	WESTWING	1	1	1.2000

PERKINS FLT PERKINS-MEAD LINE OUT
2012 HS1A APROVED BASE CASE
MAY 19, 2003
PERK-MEAD STAB; 01/03; T=0 3P FLT PERK500;FLSH CAPS MKP-YAV/YAV-WWG,
NAV-MKP/WWG;4C CLR FLT W/PERK-MEAD;8C REIN;2012.dyd;HSCC.bat

ALL COMMENTS RECEIVED FROM THE TSS REVIEW HAVE BEEN ADDED.
MOST RECENT VERSION OF THE MASTER DYNAMICS FILE IS USED, WHICH
CONTAINS THE NEW GOVERNOR MODELING RECEIVED IN RESPONSE TO THE
NOVEMBER 7, 2002 DATA REQUEST.

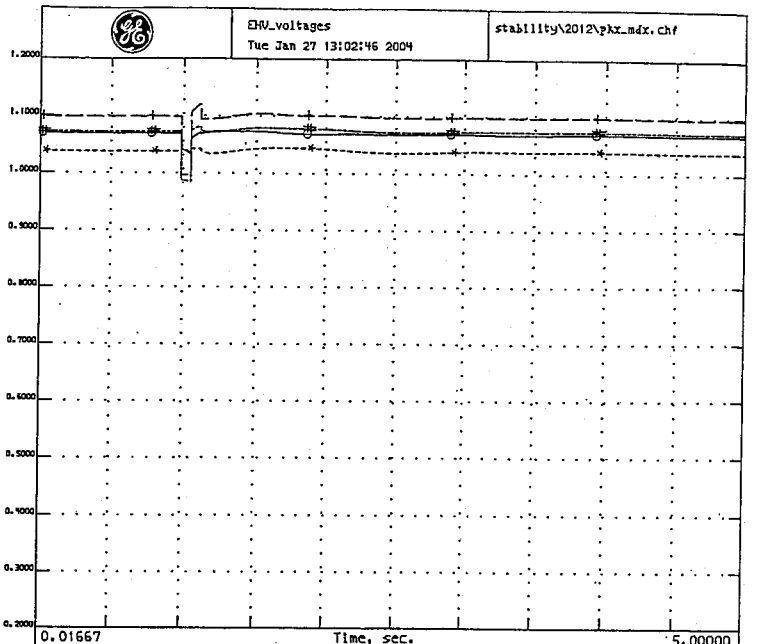

0.2000	———	O	vbus	14001	500.0	FOURCORN	1	1 I	1.2000
0.2000	— — — —	+	vbus	14003	500.0	NAVAJO	1	1 I	1.2000
0.2000	- - - - -	*	vbus	26003	500.0	ADELANTO	1	1 I	1.2000
0.2000	———	#	vbus	26048	500.0	MCCULLGH	1	1 I	1.2000

PERKINS FLT PERKINS-MEAD LINE OUT
2012 HS1A APROVED BASE CASE
MAY 19, 2003
PERK-MEAD STAB; 01/03; T=0 3P FLT PERK500;FLSH CAPS MKP-YAV/YAV-WWG,
NAV-MKP/WWG;4C CLR FLT W/PERK-MEAD;8C REIN;2012.dyd;HSCC.bat

ALL COMMENTS RECEIVED FROM THE TSS REVIEW HAVE BEEN ADDED.
MOST RECENT VERSION OF THE MASTER DYNAMICS FILE IS USED, WHICH
CONTAINS THE NEW GOVERNOR MODELING RECEIVED IN RESPONSE TO THE
NOVEMBER 7, 2002 DATA REQUEST.

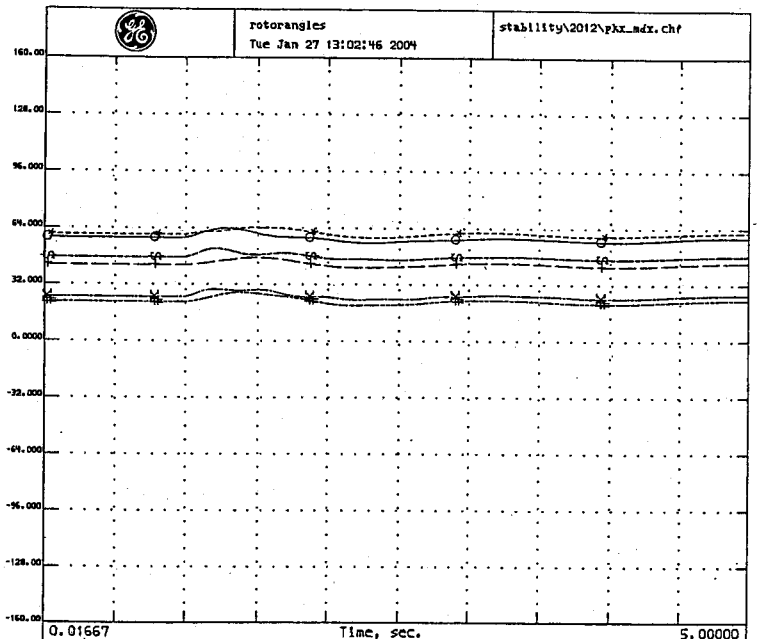

-160.0	———	O	ang	14931	24.0	PALOVRD1	1	1 I	160.00
-160.0	— — — —	+	ang	14987	18.0	DBG-CT1	1	1 I	160.00
-160.0	- - - - -	*	ang	14914	22.0	FCNGNMCC	H	1 I	160.00
-160.0	———	#	ang	14941	15.5	SAGUARO1	1	1 I	160.00
-160.0	———	X	ang	14951	13.8	MPHX CC1	1	1 I	160.00
-160.0	———	◇	ang	15981	26.0	NAVAJO 1	1	1 I	160.00

NS FLT PERKINS-MEAD LINE OUT
HS1A APROVED BASE CASE
MAY 19, 2003
PERK-MEAD STAB; 01/03; T=0 3P FLT PERK500;FLSH CAPS MKP-YAV/YAV-WWG,
NAV-MKP/WWG;4C CLR FLT W/PERK-MEAD;8C REIN;2012.dyd;HSCC.bat

ALL COMMENTS RECEIVED FROM THE TSS REVIEW HAVE BEEN ADDED.
MOST RECENT VERSION OF THE MASTER DYNAMICS FILE IS USED, WHICH
CONTAINS THE NEW GOVERNOR MODELING RECEIVED IN RESPONSE TO THE
NOVEMBER 7, 2002 DATA REQUEST.

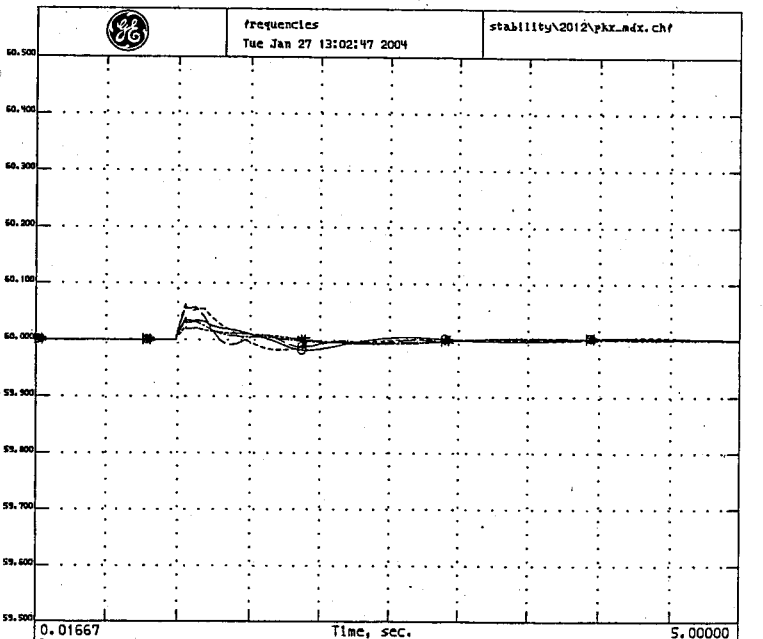

59.500	———	O	fbus	14001	500.0	FOURCORN	1	1 I	60.500
59.500	— — — —	+	fbus	14003	500.0	NAVAJO	1	1 I	60.500
59.500	- - - - -	*	fbul	14231	230.0	WESTWING	1	1 I	60.500
59.500	———	#	fbus	26003	500.0	ADELANTO	1	1 I	60.500
59.500	———	X	fbus	26048	500.0	MCCULLGH	1	1 I	60.500

PERKINS FLT PERKINS-MEAD LINE OUT
2012 HS1A APROVED BASE CASE
MAY 19, 2003
PERK-MEAD STAB; 01/03; T=0 3P FLT PERK500;FLSH CAPS MKP-YAV/YAV-WWG,
NAV-MKP/WWG;4C CLR FLT W/PERK-MEAD;8C REIN;2012.dyd;HSCC.bat

ALL COMMENTS RECEIVED FROM THE TSS REVIEW HAVE BEEN ADDED.
MOST RECENT VERSION OF THE MASTER DYNAMICS FILE IS USED, WHICH
CONTAINS THE NEW GOVERNOR MODELING RECEIVED IN RESPONSE TO THE
NOVEMBER 7, 2002 DATA REQUEST.

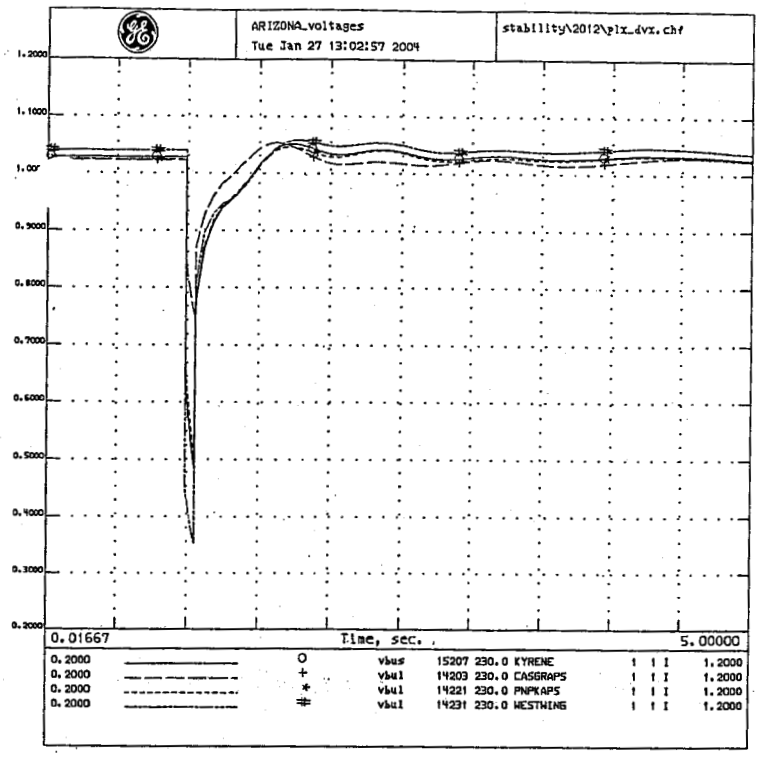

WESTERN ELECTRICITY COORDINATING COUNCIL
PV FLT. w/PV - Devers line out
MAY 19, 2003
PV-DEV STAB; 1/03; T=0 3P FLT PV500;10% FLT DMPING;FLSH CAPS
NAV-MKP/MKP-YAV,PV-DV/NG;4C CLR FLT W/PV-DEV8C REIN;2012.dyd;WSCC.bat

ALL COMMENTS RECEIVED FROM THE TSS REVIEW HAVE BEEN ADDED.
MOST RECENT VERSION OF THE MASTER DYNAMICS FILE IS USED, WHICH
CONTAINS THE NEW GOVERNOR MODELING RECEIVED IN RESPONSE TO THE
NOVEMBER 7, 2002 DATA REQUEST.

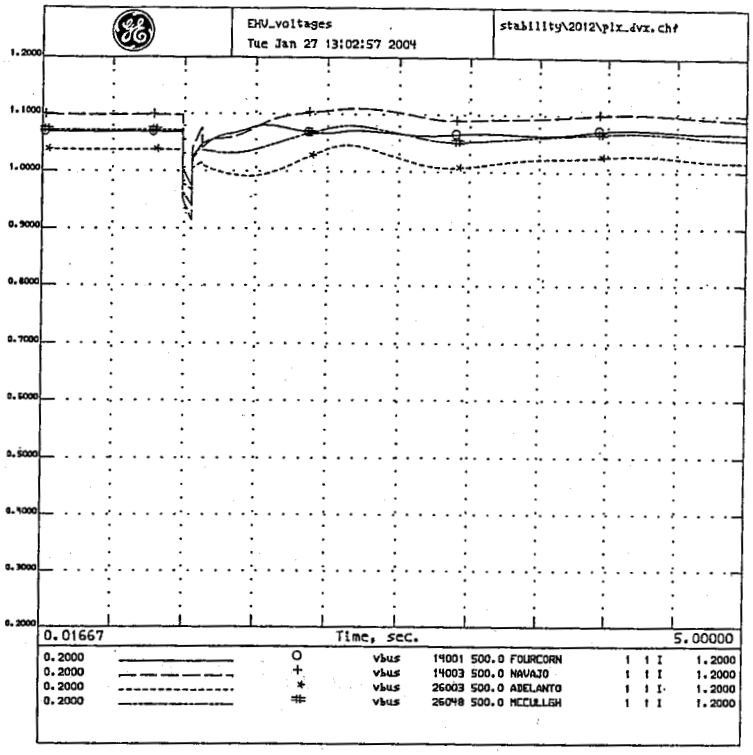

WESTERN ELECTRICITY COORDINATING COUNCIL
PV FLT. w/PV - Devers line out
MAY 19, 2003
PV-DEV STAB; 1/03; T=0 3P FLT PV500;10% FLT DMPING;FLSH CAPS
NAV-MKP/MKP-YAV,PV-DV/NG;4C CLR FLT W/PV-DEV8C REIN;2012.dyd;WSCC.bat

ALL COMMENTS RECEIVED FROM THE TSS REVIEW HAVE BEEN ADDED.
MOST RECENT VERSION OF THE MASTER DYNAMICS FILE IS USED, WHICH
CONTAINS THE NEW GOVERNOR MODELING RECEIVED IN RESPONSE TO THE
NOVEMBER 7, 2002 DATA REQUEST.

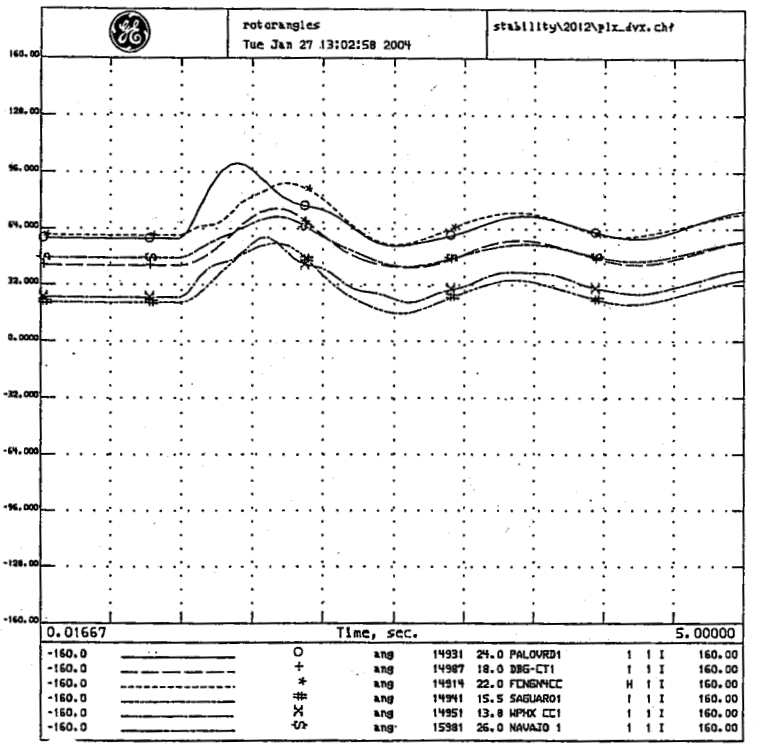

RN ELECTRICITY COORDINATING COUNCIL
.T. w/PV - Devers line out
MAY 19, 2003
PV-DEV STAB; 1/03; T=0 3P FLT PV500;10% FLT DMPING;FLSH CAPS
NAV-MKP/MKP-YAV,PV-DV/NG;4C CLR FLT W/PV-DEV8C REIN;2012.dyd;WSCC.bat

ALL COMMENTS RECEIVED FROM THE TSS REVIEW HAVE BEEN ADDED.
MOST RECENT VERSION OF THE MASTER DYNAMICS FILE IS USED, WHICH
CONTAINS THE NEW GOVERNOR MODELING RECEIVED IN RESPONSE TO THE
NOVEMBER 7, 2002 DATA REQUEST.

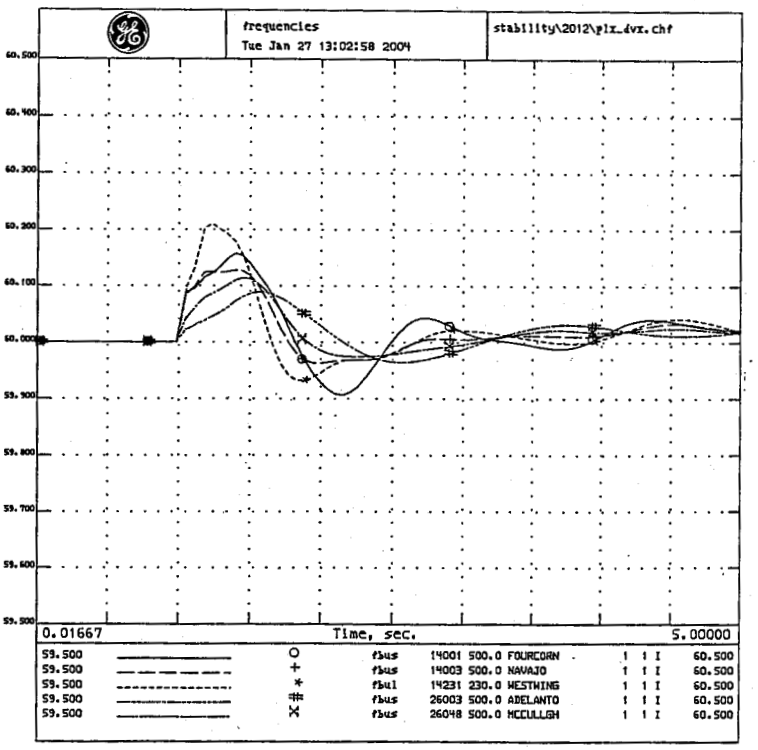

WESTERN ELECTRICITY COORDINATING COUNCIL
PV FLT. w/PV - Devers line out
MAY 19, 2003
PV-DEV STAB; 1/03; T=0 3P FLT PV500;10% FLT DMPING;FLSH CAPS
NAV-MKP/MKP-YAV,PV-DV/NG;4C CLR FLT W/PV-DEV8C REIN;2012.dyd;WSCC.bat

ALL COMMENTS RECEIVED FROM THE TSS REVIEW HAVE BEEN ADDED.
MOST RECENT VERSION OF THE MASTER DYNAMICS FILE IS USED, WHICH
CONTAINS THE NEW GOVERNOR MODELING RECEIVED IN RESPONSE TO THE
NOVEMBER 7, 2002 DATA REQUEST.

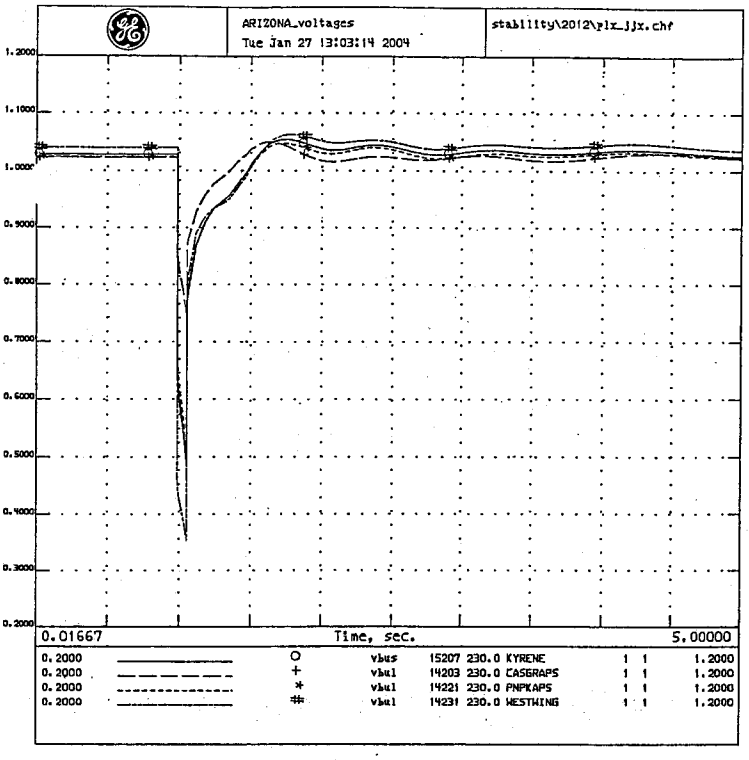

PALO VERDE FLT HASSY-JOJOBA LINE OUT
2012 HS1A APROVED BASE CASE
MAY 19, 2003
HAS-JJ STAB #1; 01/03; T=0 3P FLT PV500;10% FLT DMPING;FLSH CAPS
NAV-MKP/MKP-YAV,PV-DV/NG;4C CLR FLT W/HAS-JJ;8C REIN;2012.dyd;WSCC.bpt

ALL COMMENTS RECEIVED FROM THE TSS REVIEW HAVE BEEN ADDED.
MOST RECENT VERSION OF THE MASTER DYNAMICS FILE IS USED, WHICH
CONTAINS THE NEW GOVERNOR MODELING RECEIVED IN RESPONSE TO THE
NOVEMBER 7, 2002 DATA REQUEST.

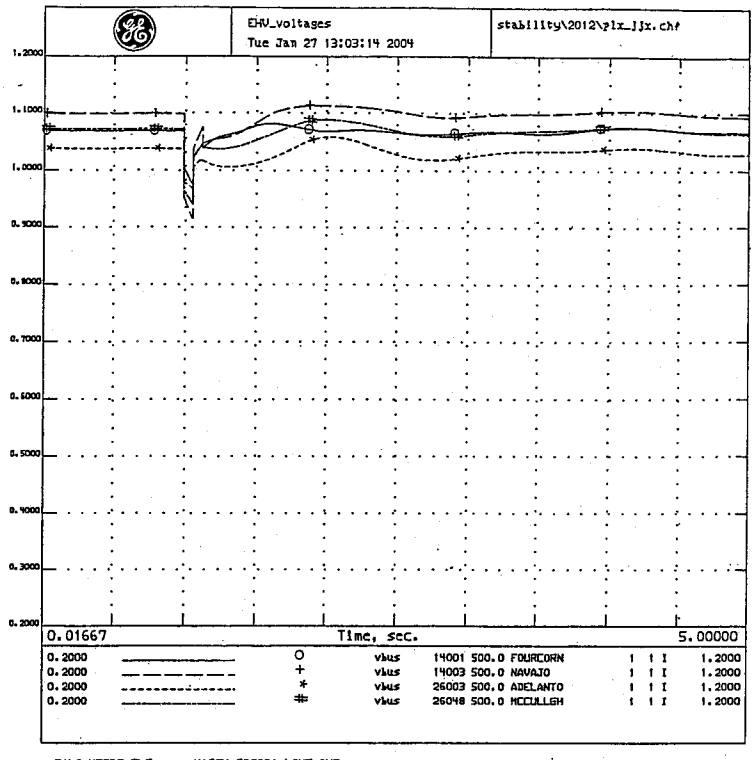

PALO VERDE FLT HASSY-JOJOBA LINE OUT
2012 HS1A APROVED BASE CASE
MAY 19, 2003
HAS-JJ STAB #1; 01/03; T=0 3P FLT PV500;10% FLT DMPING;FLSH CAPS
NAV-MKP/MKP-YAV,PV-DV/NG;4C CLR FLT W/HAS-JJ;8C REIN;2012.dyd;WSCC.bpt

ALL COMMENTS RECEIVED FROM THE TSS REVIEW HAVE BEEN ADDED.
MOST RECENT VERSION OF THE MASTER DYNAMICS FILE IS USED, WHICH
CONTAINS THE NEW GOVERNOR MODELING RECEIVED IN RESPONSE TO THE
NOVEMBER 7, 2002 DATA REQUEST.

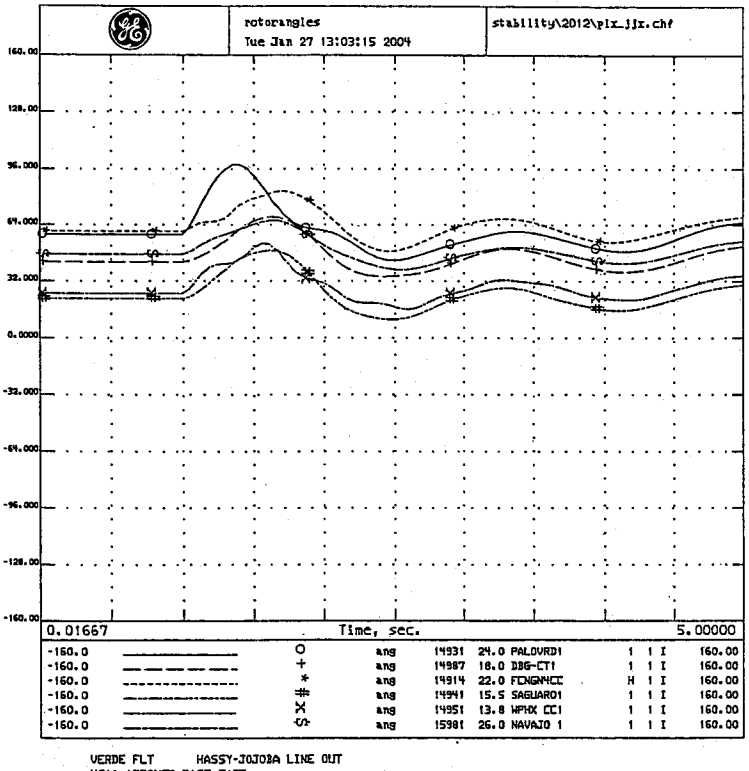

VERDE FLT HASSY-JOJOBA LINE OUT
HS1A APROVED BASE CASE
19, 2003
HAS-JJ STAB #1; 01/03; T=0 3P FLT PV500;10% FLT DMPING;FLSH CAPS
NAV-MKP/MKP-YAV,PV-DV/NG;4C CLR FLT W/HAS-JJ;8C REIN;2012.dyd;WSCC.bpt

ALL COMMENTS RECEIVED FROM THE TSS REVIEW HAVE BEEN ADDED.
MOST RECENT VERSION OF THE MASTER DYNAMICS FILE IS USED, WHICH
CONTAINS THE NEW GOVERNOR MODELING RECEIVED IN RESPONSE TO THE
NOVEMBER 7, 2002 DATA REQUEST.

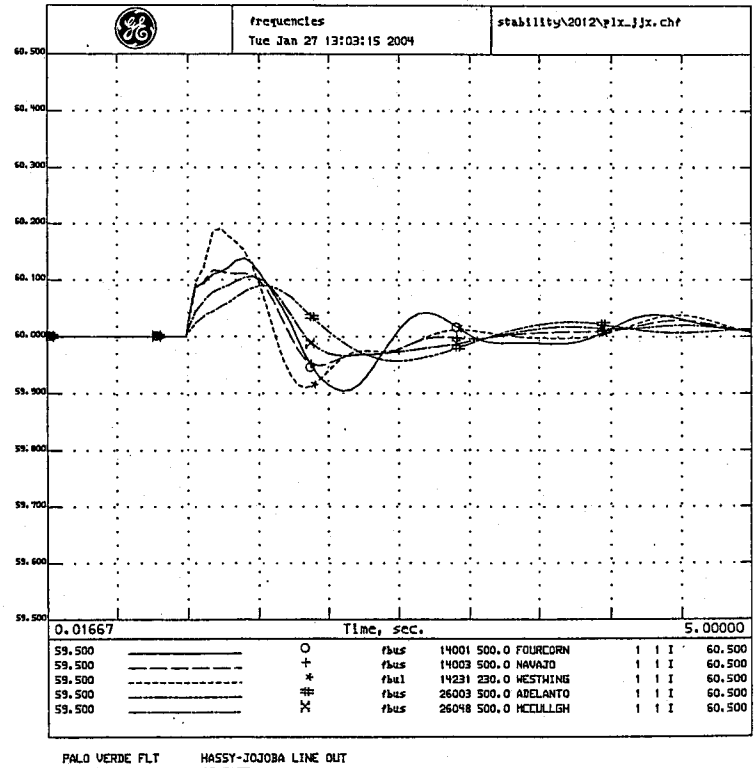

PALO VERDE FLT HASSY-JOJOBA LINE OUT
2012 HS1A APROVED BASE CASE
MAY 19, 2003
HAS-JJ STAB #1; 01/03; T=0 3P FLT PV500;10% FLT DMPING;FLSH CAPS
NAV-MKP/MKP-YAV,PV-DV/NG;4C CLR FLT W/HAS-JJ;8C REIN;2012.dyd;WSCC.bpt

ALL COMMENTS RECEIVED FROM THE TSS REVIEW HAVE BEEN ADDED.
MOST RECENT VERSION OF THE MASTER DYNAMICS FILE IS USED, WHICH
CONTAINS THE NEW GOVERNOR MODELING RECEIVED IN RESPONSE TO THE
NOVEMBER 7, 2002 DATA REQUEST.

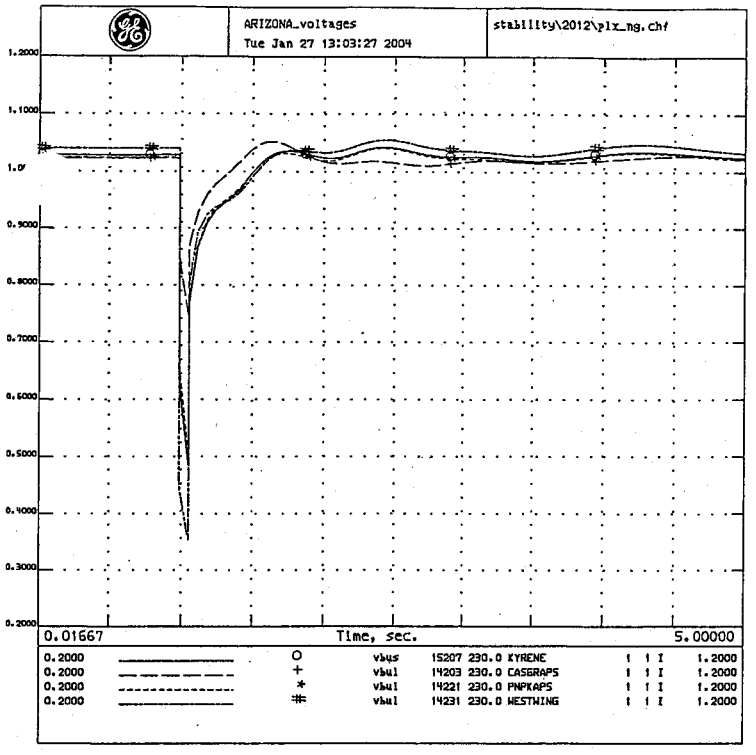

WESTERN ELECTRICITY COORDINATING COUNCIL
PV FLT. w/HASSY-N.GILA line out
MAY 19, 2003
PV-NGILA STAB; 1/03; T=0 3P FLT PV500;10% FLT DMPING;FLSH CAPS
NAV-MKP/MKP-YAV,PV-DV/NG;4C CLR FLT W/PV-NG;8C REIN;2012.dyd;WSCC.bat

ALL COMMENTS RECEIVED FROM THE TSS REVIEW HAVE BEEN ADDED.
MOST RECENT VERSION OF THE MASTER DYNAMICS FILE IS USED, WHICH
CONTAINS THE NEW GOVERNOR MODELING RECEIVED IN RESPONSE TO THE
NOVEMBER 7, 2002 DATA REQUEST.

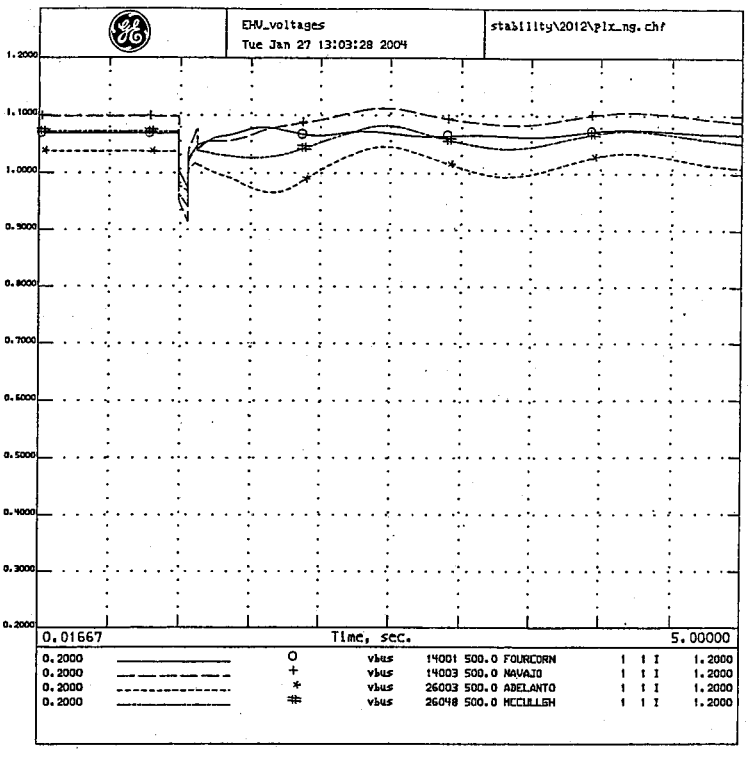

WESTERN ELECTRICITY COORDINATING COUNCIL
PV FLT. w/HASSY-N.GILA line out
MAY 19, 2003
PV-NGILA STAB; 1/03; T=0 3P FLT PV500;10% FLT DMPING;FLSH CAPS
NAV-MKP/MKP-YAV,PV-DV/NG;4C CLR FLT W/PV-NG;8C REIN;2012.dyd;WSCC.bat

ALL COMMENTS RECEIVED FROM THE TSS REVIEW HAVE BEEN ADDED.
MOST RECENT VERSION OF THE MASTER DYNAMICS FILE IS USED, WHICH
CONTAINS THE NEW GOVERNOR MODELING RECEIVED IN RESPONSE TO THE
NOVEMBER 7, 2002 DATA REQUEST.

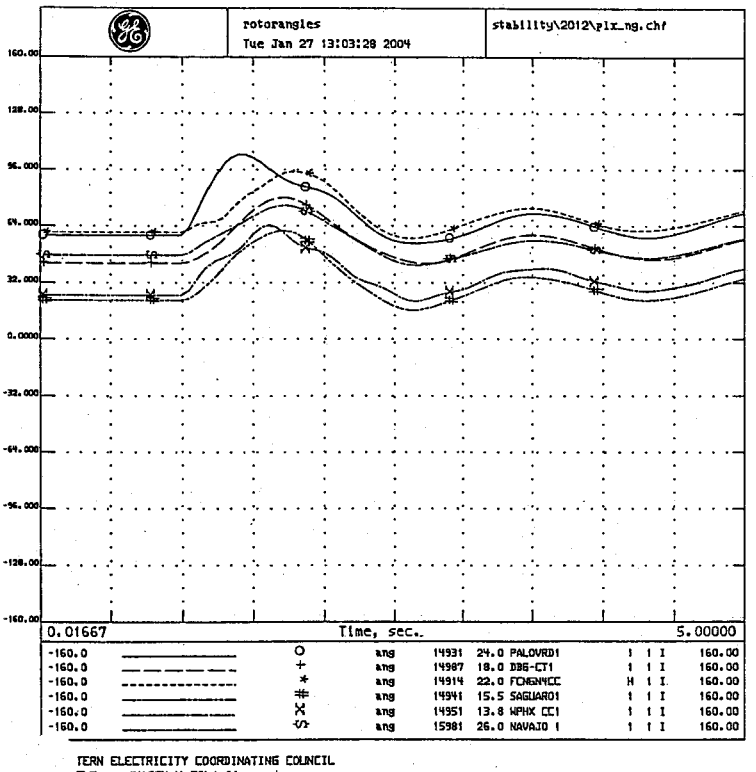

TERN ELECTRICITY COORDINATING COUNCIL
FLT. w/HASSY-N.GILA line out
MAY 19, 2003
PV-NGILA STAB; 1/03; T=0 3P FLT PV500;10% FLT DMPING;FLSH CAPS
NAV-MKP/MKP-YAV,PV-DV/NG;4C CLR FLT W/PV-NG;8C REIN;2012.dyd;WSCC.bat

ALL COMMENTS RECEIVED FROM THE TSS REVIEW HAVE BEEN ADDED.
MOST RECENT VERSION OF THE MASTER DYNAMICS FILE IS USED, WHICH
CONTAINS THE NEW GOVERNOR MODELING RECEIVED IN RESPONSE TO THE
NOVEMBER 7, 2002 DATA REQUEST.

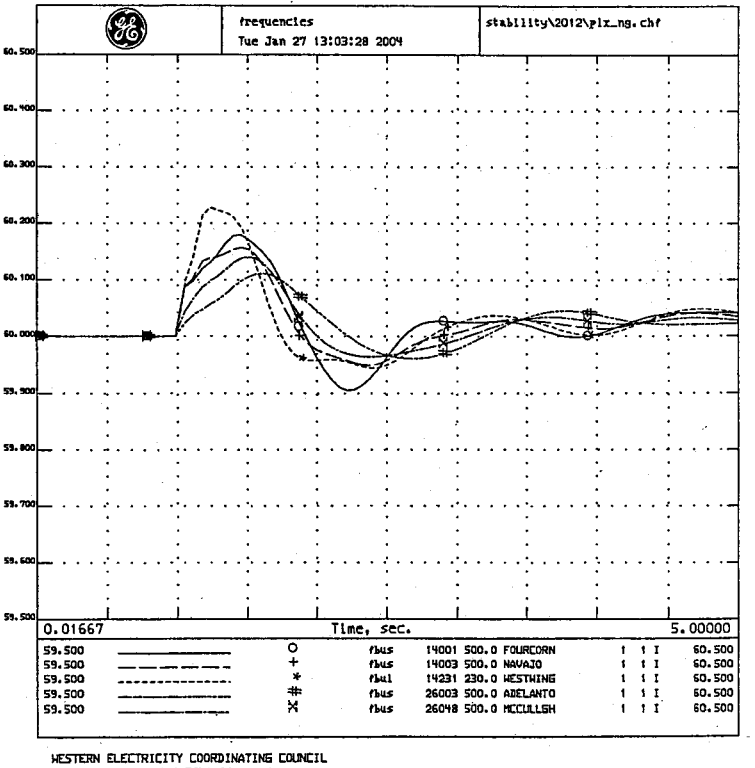

WESTERN ELECTRICITY COORDINATING COUNCIL
PV FLT. w/HASSY-N.GILA line out
MAY 19, 2003
PV-NGILA STAB; 1/03; T=0 3P FLT PV500;10% FLT DMPING;FLSH CAPS
NAV-MKP/MKP-YAV,PV-DV/NG;4C CLR FLT W/PV-NG;8C REIN;2012.dyd;WSCC.bat

ALL COMMENTS RECEIVED FROM THE TSS REVIEW HAVE BEEN ADDED.
MOST RECENT VERSION OF THE MASTER DYNAMICS FILE IS USED, WHICH
CONTAINS THE NEW GOVERNOR MODELING RECEIVED IN RESPONSE TO THE
NOVEMBER 7, 2002 DATA REQUEST.

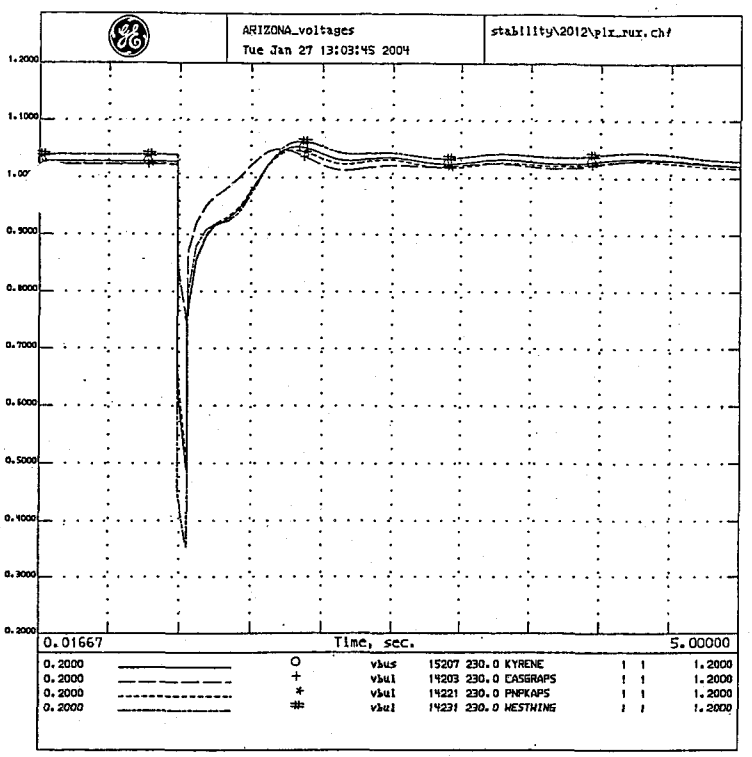

PALO VERDE FLT PV-RUDD LINE OUT
2012 HS1A APROVED BASE CASE
MAY 19, 2003
PV-RUDD STAB #1; 01/03; T=0 3P FLT PV500;10% FLT DMPING;FLSH CAPS
NAV-MKP/MKP-YAV,PV-DV/NG;4C CLR FLT W/PV-RD;8C REIN;2012.dyd;WSCC.bpt

ALL COMMENTS RECEIVED FROM THE TSS REVIEW HAVE BEEN ADDED.
MOST RECENT VERSION OF THE MASTER DYNAMICS FILE IS USED, WHICH
CONTAINS THE NEW GOVERNOR MODELING RECEIVED IN RESPONSE TO THE
NOVEMBER 7, 2002 DATA REQUEST.

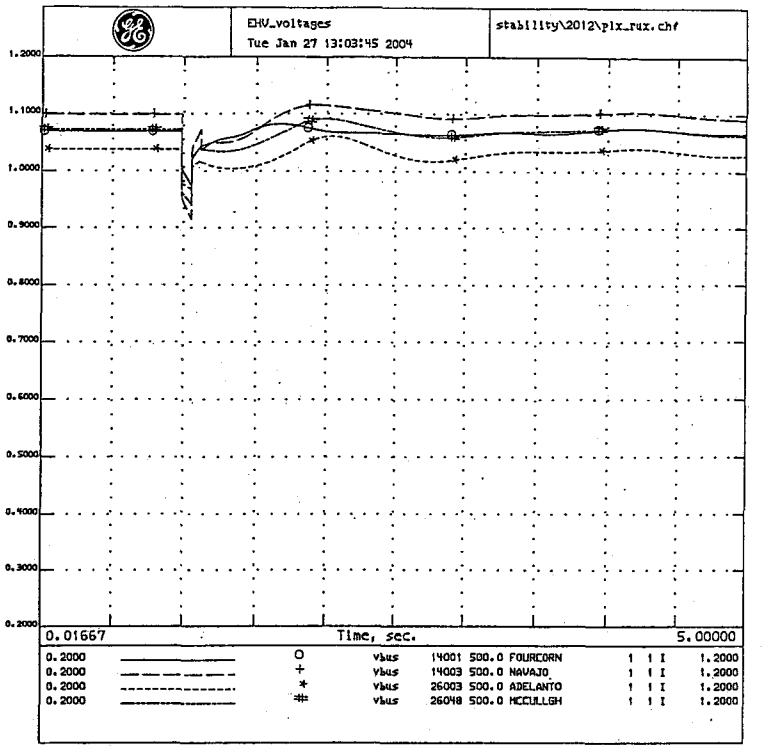

PALO VERDE FLT PV-RUDD LINE OUT
2012 HS1A APROVED BASE CASE
MAY 19, 2003
PV-RUDD STAB #1; 01/03; T=0 3P FLT PV500;10% FLT DMPING;FLSH CAPS
NAV-MKP/MKP-YAV,PV-DV/NG;4C CLR FLT W/PV-RD;8C REIN;2012.dyd;WSCC.bpt

ALL COMMENTS RECEIVED FROM THE TSS REVIEW HAVE BEEN ADDED.
MOST RECENT VERSION OF THE MASTER DYNAMICS FILE IS USED, WHICH
CONTAINS THE NEW GOVERNOR MODELING RECEIVED IN RESPONSE TO THE
NOVEMBER 7, 2002 DATA REQUEST.

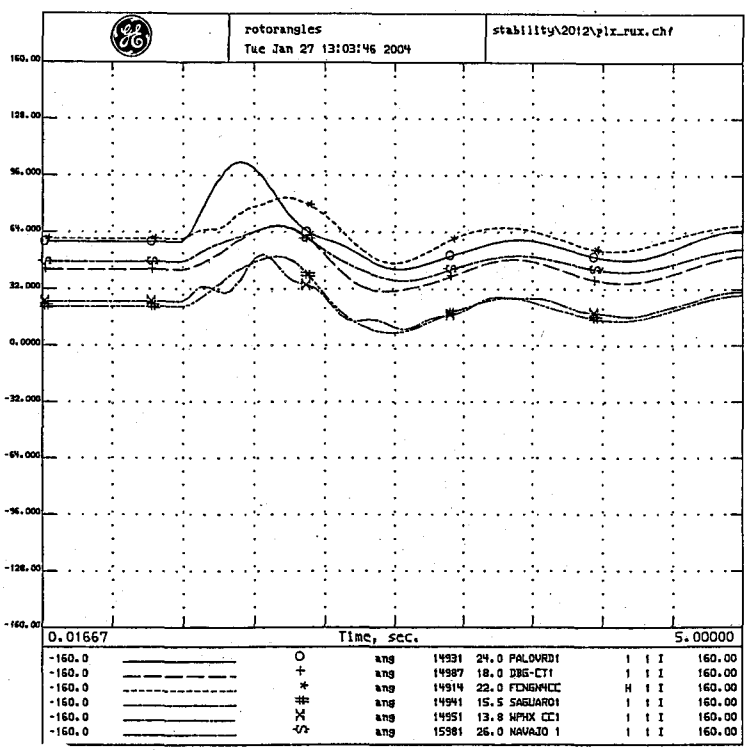

) VERDE FLT PV-RUDD LINE OUT
2 HS1A APROVED BASE CASE
MAY 19, 2003
PV-RUDD STAB #1; 01/03; T=0 3P FLT PV500;10% FLT DMPING;FLSH CAPS
NAV-MKP/MKP-YAV,PV-DV/NG;4C CLR FLT W/PV-RD;8C REIN;2012.dyd;WSCC.bpt

ALL COMMENTS RECEIVED FROM THE TSS REVIEW HAVE BEEN ADDED.
MOST RECENT VERSION OF THE MASTER DYNAMICS FILE IS USED, WHICH
CONTAINS THE NEW GOVERNOR MODELING RECEIVED IN RESPONSE TO THE
NOVEMBER 7, 2002 DATA REQUEST.

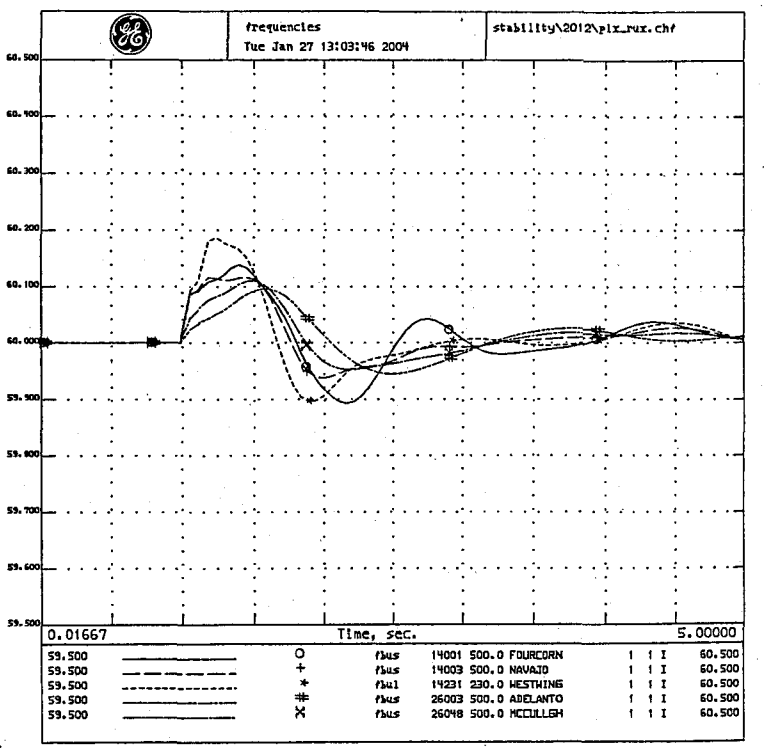

PALO VERDE FLT PV-RUDD LINE OUT
2012 HS1A APROVED BASE CASE
MAY 19, 2003
PV-RUDD STAB #1; 01/03; T=0 3P FLT PV500;10% FLT DMPING;FLSH CAPS
NAV-MKP/MKP-YAV,PV-DV/NG;4C CLR FLT W/PV-RD;8C REIN;2012.dyd;WSCC.bpt

ALL COMMENTS RECEIVED FROM THE TSS REVIEW HAVE BEEN ADDED.
MOST RECENT VERSION OF THE MASTER DYNAMICS FILE IS USED, WHICH
CONTAINS THE NEW GOVERNOR MODELING RECEIVED IN RESPONSE TO THE
NOVEMBER 7, 2002 DATA REQUEST.

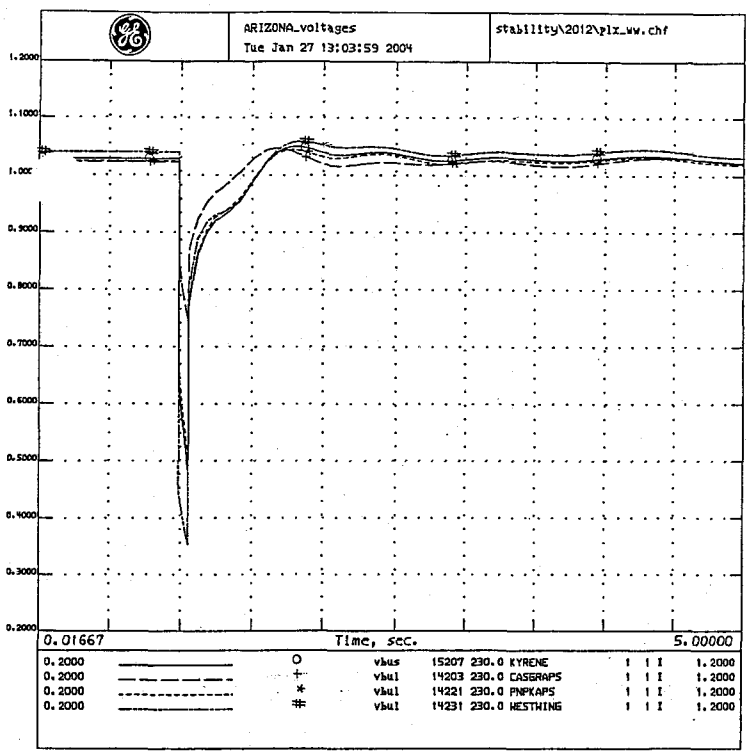

WESTERN ELECTRICITY COORDINATING COUNCIL
PV FLT w/PV-WW line out
MAY 19, 2003
PV-WWG STAB; 1/03; T=0 3P FLT PV500;10% FLT DMPING;FLSH CAPS
NAV-MKP/MKP-YAV,PV-DV/NG;4C CLR FLT W/PV-WW;8C REIN;2012.dyd;WSCC.bat

ALL COMMENTS RECEIVED FROM THE TSS REVIEW HAVE BEEN ADDED.
MOST RECENT VERSION OF THE MASTER DYNAMICS FILE IS USED, WHICH
CONTAINS THE NEW GOVERNOR MODELING RECEIVED IN RESPONSE TO THE
NOVEMBER 7, 2002 DATA REQUEST.

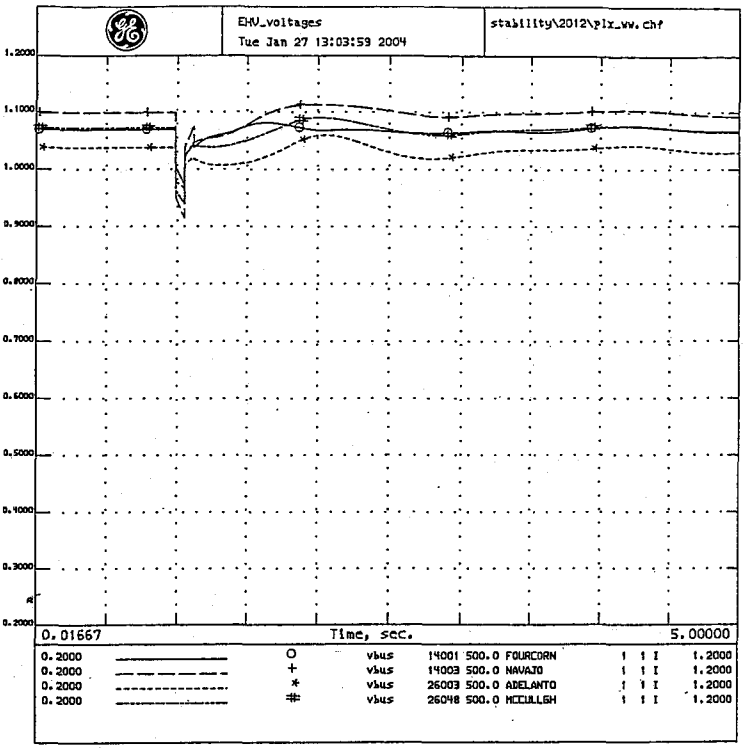

WESTERN ELECTRICITY COORDINATING COUNCIL
PV FLT w/PV-WW line out
MAY 19, 2003
PV-WWG STAB; 1/03; T=0 3P FLT PV500;10% FLT DMPING;FLSH CAPS
NAV-MKP/MKP-YAV,PV-DV/NG;4C CLR FLT W/PV-WW;8C REIN;2012.dyd;WSCC.bat

ALL COMMENTS RECEIVED FROM THE TSS REVIEW HAVE BEEN ADDED.
MOST RECENT VERSION OF THE MASTER DYNAMICS FILE IS USED, WHICH
CONTAINS THE NEW GOVERNOR MODELING RECEIVED IN RESPONSE TO THE
NOVEMBER 7, 2002 DATA REQUEST.

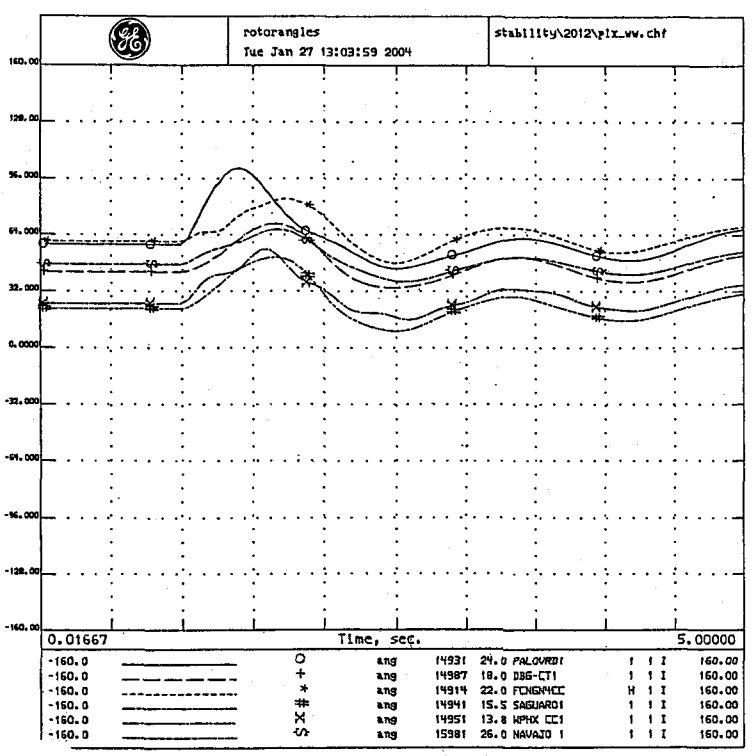

TERN ELECTRICITY COORDINATING COUNCIL
FLT w/PV-WW line out
MAY 19, 2003
PV-WWG STAB; 1/03; T=0 3P FLT PV500;10% FLT DMPING;FLSH CAPS
NAV-MKP/MKP-YAV,PV-DV/NG;4C CLR FLT W/PV-WW;8C REIN;2012.dyd;WSCC.bat

ALL COMMENTS RECEIVED FROM THE TSS REVIEW HAVE BEEN ADDED.
MOST RECENT VERSION OF THE MASTER DYNAMICS FILE IS USED, WHICH
CONTAINS THE NEW GOVERNOR MODELING RECEIVED IN RESPONSE TO THE
NOVEMBER 7, 2002 DATA REQUEST.

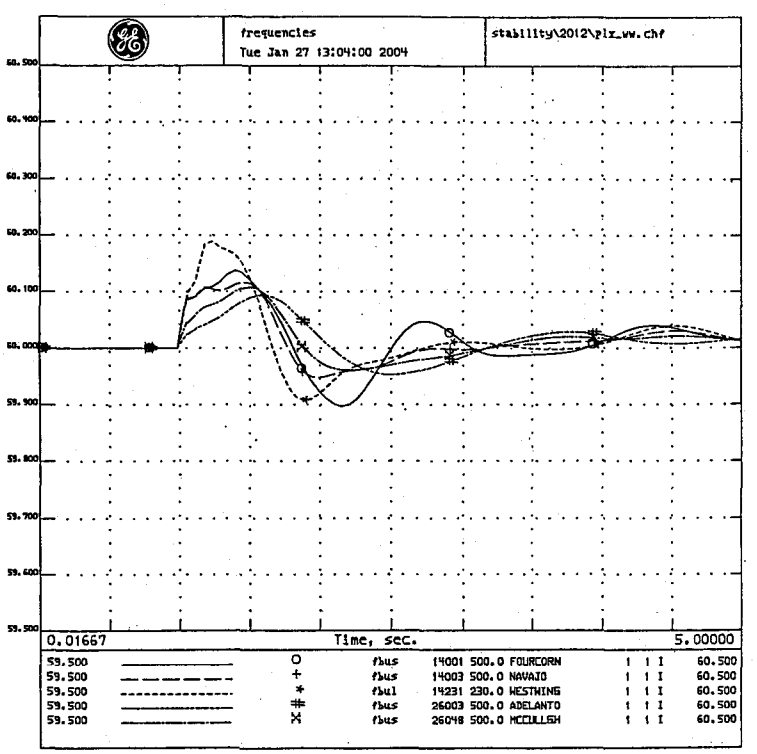

WESTERN ELECTRICITY COORDINATING COUNCIL
PV FLT w/PV-WW line out
MAY 19, 2003
PV-WWG STAB; 1/03; T=0 3P FLT PV500;10% FLT DMPING;FLSH CAPS
NAV-MKP/MKP-YAV,PV-DV/NG;4C CLR FLT W/PV-WW;8C REIN;2012.dyd;WSCC.bat

ALL COMMENTS RECEIVED FROM THE TSS REVIEW HAVE BEEN ADDED.
MOST RECENT VERSION OF THE MASTER DYNAMICS FILE IS USED, WHICH
CONTAINS THE NEW GOVERNOR MODELING RECEIVED IN RESPONSE TO THE
NOVEMBER 7, 2002 DATA REQUEST.

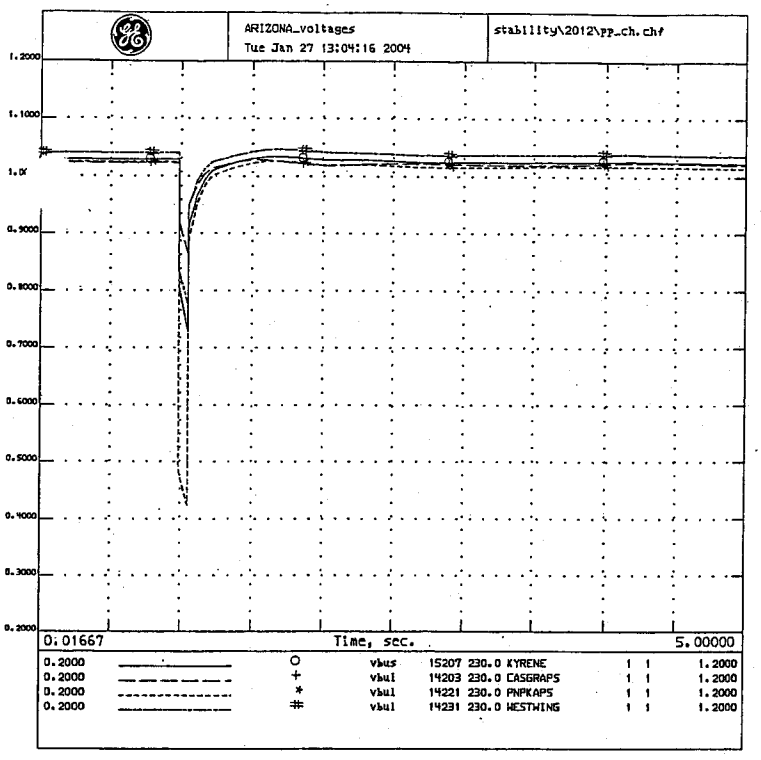

PNPK 345KV FLT PP-CH LINE OUT
2012 HS1A APROVED BASE CASE
MAY 19, 2003
PP-CH STAB #1; 01/03; T=0 3P FLT PP345;
4C CLR FLT W/PP-CH;2012.dyd;WSCC.bpt

ALL COMMENTS RECEIVED FROM THE TSS REVIEW HAVE BEEN ADDED.
MOST RECENT VERSION OF THE MASTER DYNAMICS FILE IS USED, WHICH
CONTAINS THE NEW GOVERNOR MODELING RECEIVED IN RESPONSE TO THE
NOVEMBER 7, 2002 DATA REQUEST.

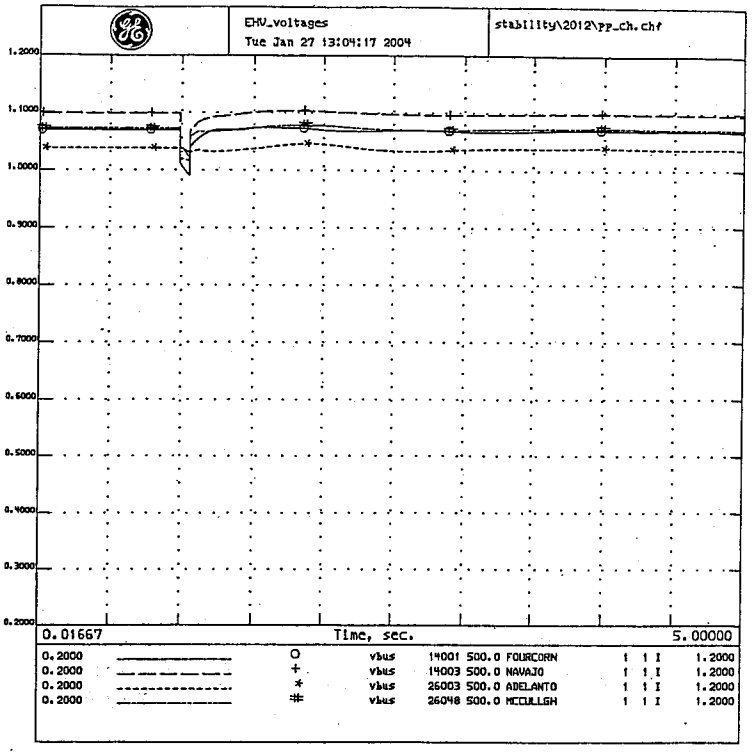

PNPK 345KV FLT PP-CH LINE OUT
2012 HS1A APROVED BASE CASE
MAY 19, 2003
PP-CH STAB #1; 01/03; T=0 3P FLT PP345;
4C CLR FLT W/PP-CH;2012.dyd;WSCC.bpt

ALL COMMENTS RECEIVED FROM THE TSS REVIEW HAVE BEEN ADDED.
MOST RECENT VERSION OF THE MASTER DYNAMICS FILE IS USED, WHICH
CONTAINS THE NEW GOVERNOR MODELING RECEIVED IN RESPONSE TO THE
NOVEMBER 7, 2002 DATA REQUEST.

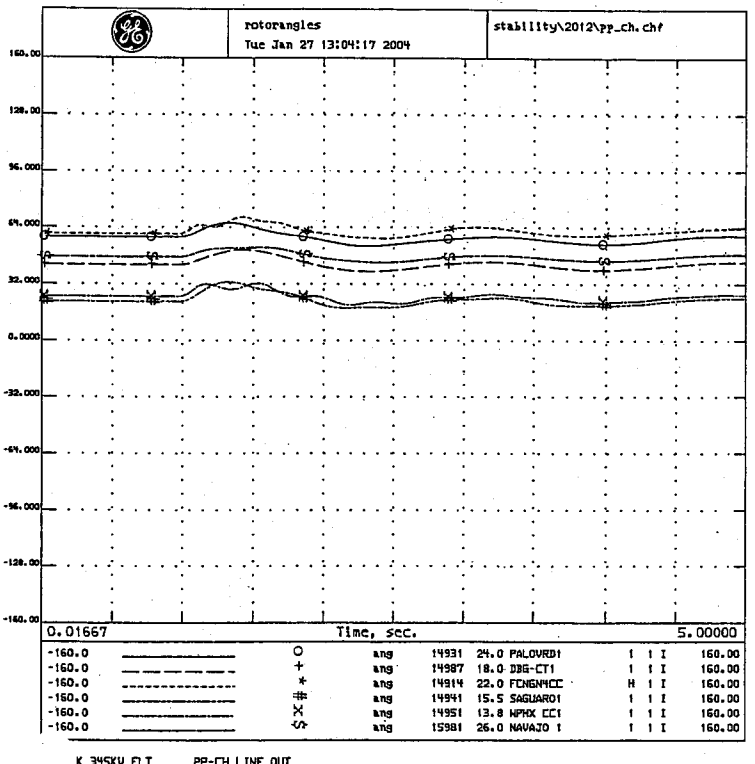

K 345KV FLT PP-CH LINE OUT
/12 HS1A APROVED BASE CASE
MAY 19, 2003
PP-CH STAB #1; 01/03; T=0 3P FLT PP345;
4C CLR FLT W/PP-CH;2012.dyd;WSCC.bpt

ALL COMMENTS RECEIVED FROM THE TSS REVIEW HAVE BEEN ADDED.
MOST RECENT VERSION OF THE MASTER DYNAMICS FILE IS USED, WHICH
CONTAINS THE NEW GOVERNOR MODELING RECEIVED IN RESPONSE TO THE
NOVEMBER 7, 2002 DATA REQUEST.

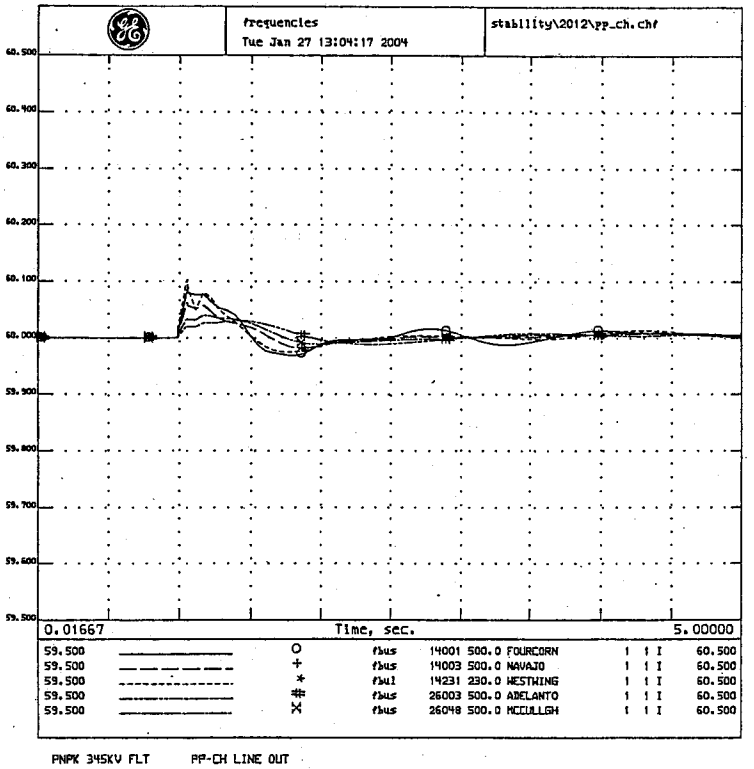

PNPK 345KV FLT PP-CH LINE OUT
2012 HS1A APROVED BASE CASE
MAY 19, 2003
PP-CH STAB #1; 01/03; T=0 3P FLT PP345;
4C CLR FLT W/PP-CH;2012.dyd;WSCC.bpt

ALL COMMENTS RECEIVED FROM THE TSS REVIEW HAVE BEEN ADDED.
MOST RECENT VERSION OF THE MASTER DYNAMICS FILE IS USED, WHICH
CONTAINS THE NEW GOVERNOR MODELING RECEIVED IN RESPONSE TO THE
NOVEMBER 7, 2002 DATA REQUEST.

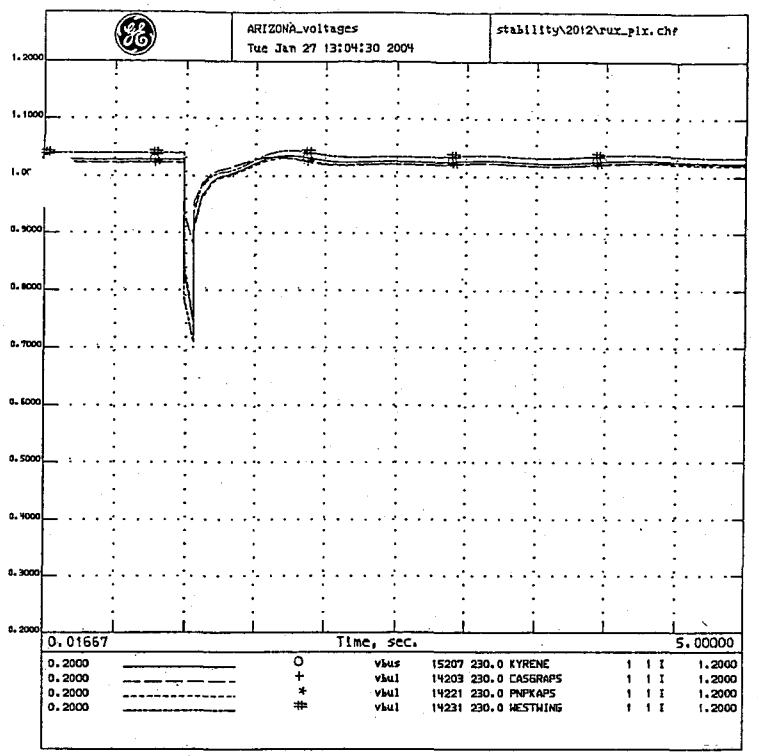

RUDD FLT RUDD-PV LINE OUT
2012 HS1A APROVED BASE CASE
MAY 19, 2003
PV-RUDD STAB #1; 01/03; T=0 3P FLT RUDD500;10% FLT DMPING;FLSH CAPS
NAV-MKP/MKP-YAV,PV-DV/NG;4C CLR FLT W/PV-RUDD;8C REIN;2012.dyd;WSCC.bpt

ALL COMMENTS RECEIVED FROM THE TSS REVIEW HAVE BEEN ADDED.
MOST RECENT VERSION OF THE MASTER DYNAMICS FILE IS USED, WHICH
CONTAINS THE NEW GOVERNOR MODELING RECEIVED IN RESPONSE TO THE
NOVEMBER 7, 2002 DATA REQUEST.

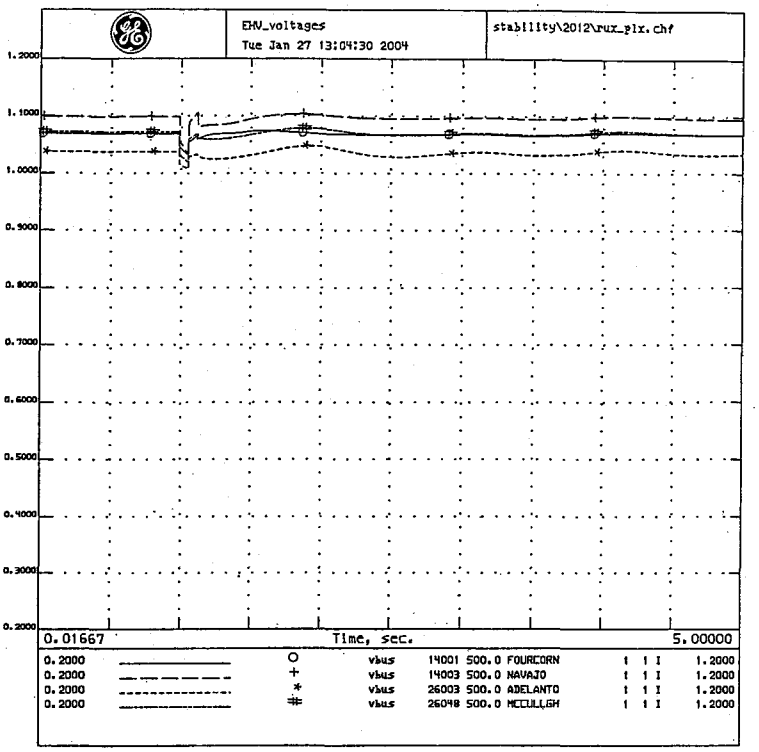

RUDD FLT RUDD-PV LINE OUT
2012 HS1A APROVED BASE CASE
MAY 19, 2003
PV-RUDD STAB #1; 01/03; T=0 3P FLT RUDD500;10% FLT DMPING;FLSH CAPS
NAV-MKP/MKP-YAV,PV-DV/NG;4C CLR FLT W/PV-RUDD;8C REIN;2012.dyd;WSCC.bpt

ALL COMMENTS RECEIVED FROM THE TSS REVIEW HAVE BEEN ADDED.
MOST RECENT VERSION OF THE MASTER DYNAMICS FILE IS USED, WHICH
CONTAINS THE NEW GOVERNOR MODELING RECEIVED IN RESPONSE TO THE
NOVEMBER 7, 2002 DATA REQUEST.

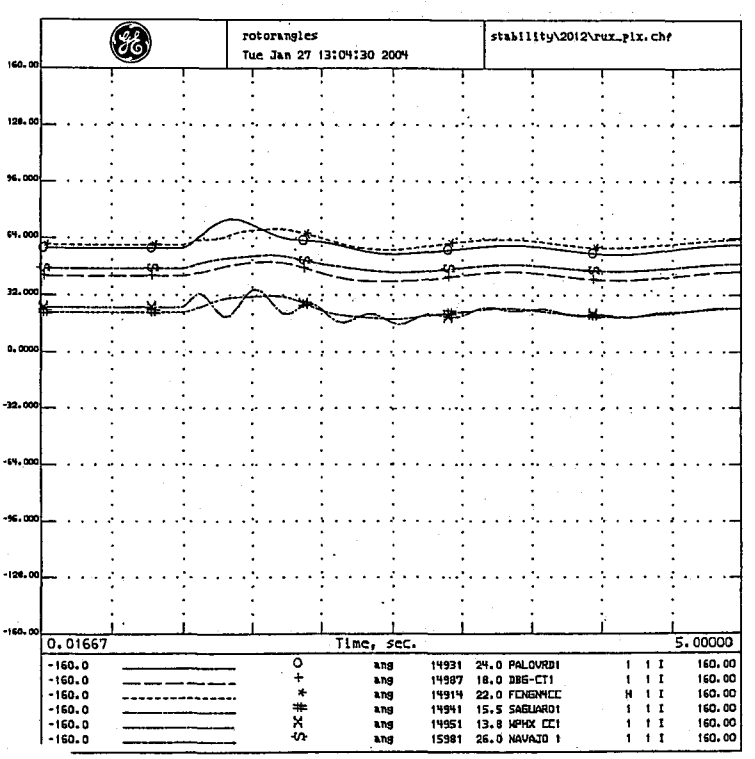

D FLT RUDD-PV LINE OUT
012 HS1A APROVED BASE CASE
MAY 19, 2003
PV-RUDD STAB #1; 01/03; T=0 3P FLT RUDD500;10% FLT DMPING;FLSH CAPS
NAV-MKP/MKP-YAV,PV-DV/NG;4C CLR FLT W/PV-RUDD;8C REIN;2012.dyd;WSCC.bpt

ALL COMMENTS RECEIVED FROM THE TSS REVIEW HAVE BEEN ADDED.
MOST RECENT VERSION OF THE MASTER DYNAMICS FILE IS USED, WHICH
CONTAINS THE NEW GOVERNOR MODELING RECEIVED IN RESPONSE TO THE
NOVEMBER 7, 2002 DATA REQUEST.

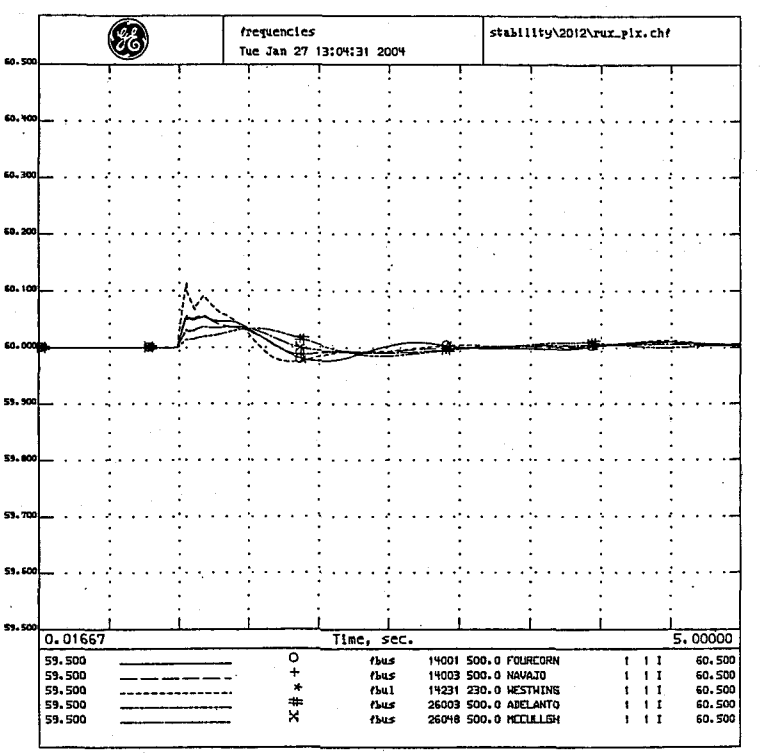

RUDD FLT RUDD-PV LINE OUT
2012 HS1A APROVED BASE CASE
MAY 19, 2003
PV-RUDD STAB #1; 01/03; T=0 3P FLT RUDD500;10% FLT DMPING;FLSH CAPS
NAV-MKP/MKP-YAV,PV-DV/NG;4C CLR FLT W/PV-RUDD;8C REIN;2012.dyd;WSCC.bpt

ALL COMMENTS RECEIVED FROM THE TSS REVIEW HAVE BEEN ADDED.
MOST RECENT VERSION OF THE MASTER DYNAMICS FILE IS USED, WHICH
CONTAINS THE NEW GOVERNOR MODELING RECEIVED IN RESPONSE TO THE
NOVEMBER 7, 2002 DATA REQUEST.

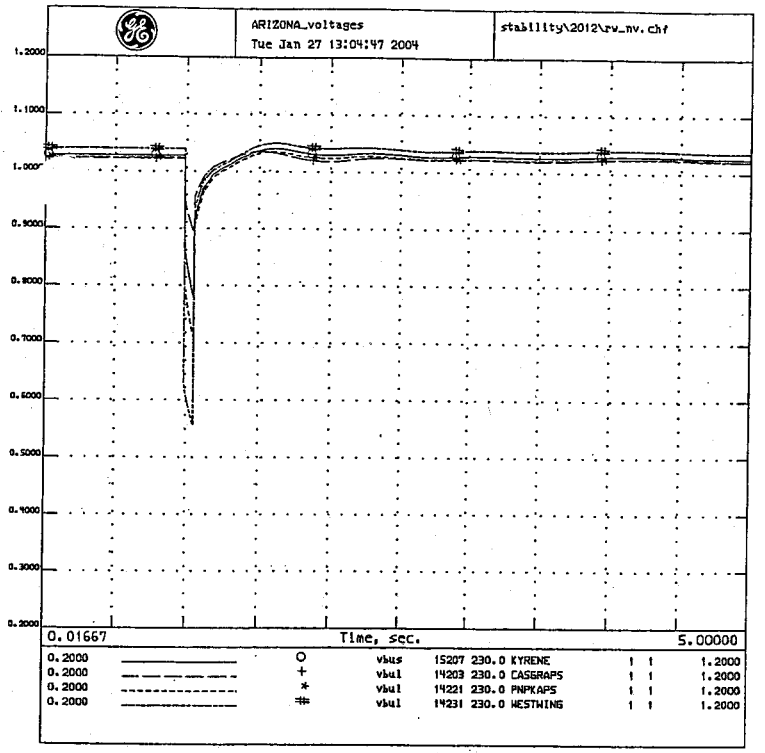

RWY FLT RW-NAV LINE OUT
2012 HS1A APROVED BASE CASE
MAY 19, 2003
RWY-NAV STAB; 1/03; T=0 3P FLT RWY500; 6% FLT DMPING;FLSH CAPS
NAV-MCC/MKP,MKP-ELD;4C CLR FLT W/RWY-NAV;8C REIN;2012.dyd;WSCC.bat

ALL COMMENTS RECEIVED FROM THE TSS REVIEW HAVE BEEN ADDED.
MOST RECENT VERSION OF THE MASTER DYNAMICS FILE IS USED, WHICH
CONTAINS THE NEW GOVERNOR MODELING RECEIVED IN RESPONSE TO THE
NOVEMBER 7, 2002 DATA REQUEST.

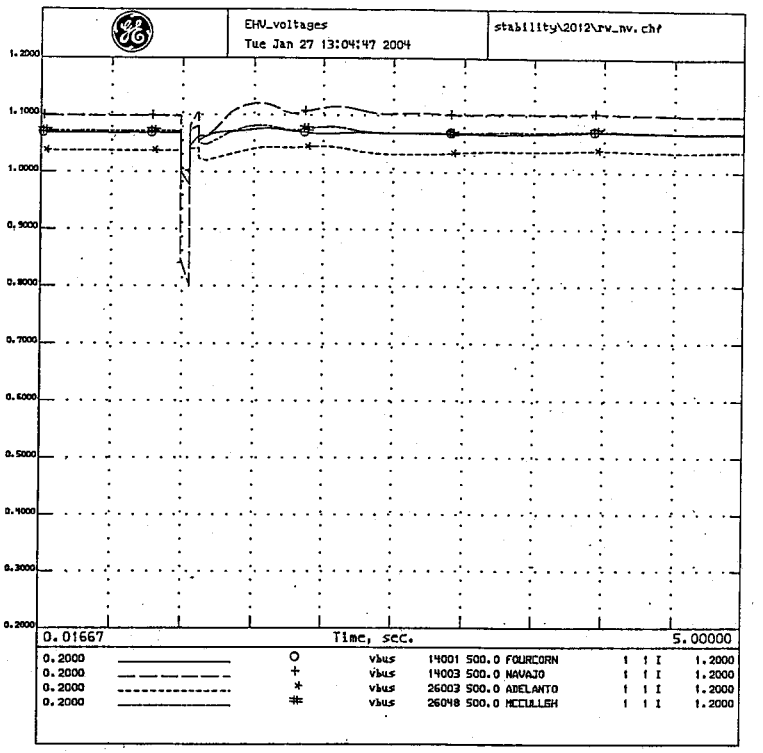

RWY FLT RW-NAV LINE OUT
2012 HS1A APROVED BASE CASE
MAY 19, 2003
RWY-NAV STAB; 1/03; T=0 3P FLT RWY500; 6% FLT DMPING;FLSH CAPS
NAV-MCC/MKP,MKP-ELD;4C CLR FLT W/RWY-NAV;8C REIN;2012.dyd;WSCC.bat

ALL COMMENTS RECEIVED FROM THE TSS REVIEW HAVE BEEN ADDED.
MOST RECENT VERSION OF THE MASTER DYNAMICS FILE IS USED, WHICH
CONTAINS THE NEW GOVERNOR MODELING RECEIVED IN RESPONSE TO THE
NOVEMBER 7, 2002 DATA REQUEST.

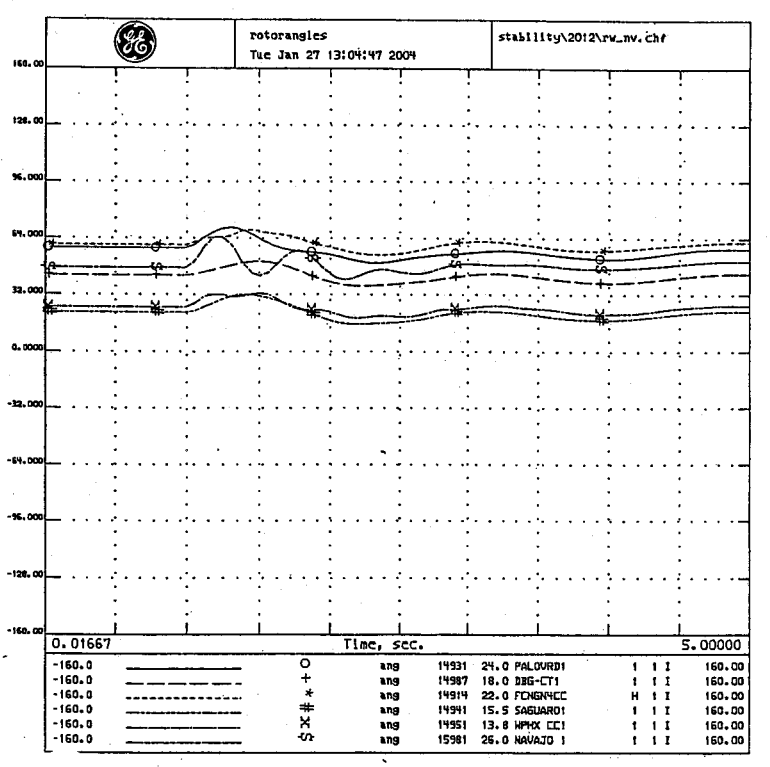

LT RW-NAV LINE OUT
HS1A APROVED BASE CASE
MAY 19, 2003
RWY-NAV STAB; 1/03; T=0 3P FLT RWY500; 6% FLT DMPING;FLSH CAPS
NAV-MCC/MKP,MKP-ELD;4C CLR FLT W/RWY-NAV;8C REIN;2012.dyd;WSCC.bat

ALL COMMENTS RECEIVED FROM THE TSS REVIEW HAVE BEEN ADDED.
MOST RECENT VERSION OF THE MASTER DYNAMICS FILE IS USED, WHICH
CONTAINS THE NEW GOVERNOR MODELING RECEIVED IN RESPONSE TO THE
NOVEMBER 7, 2002 DATA REQUEST.

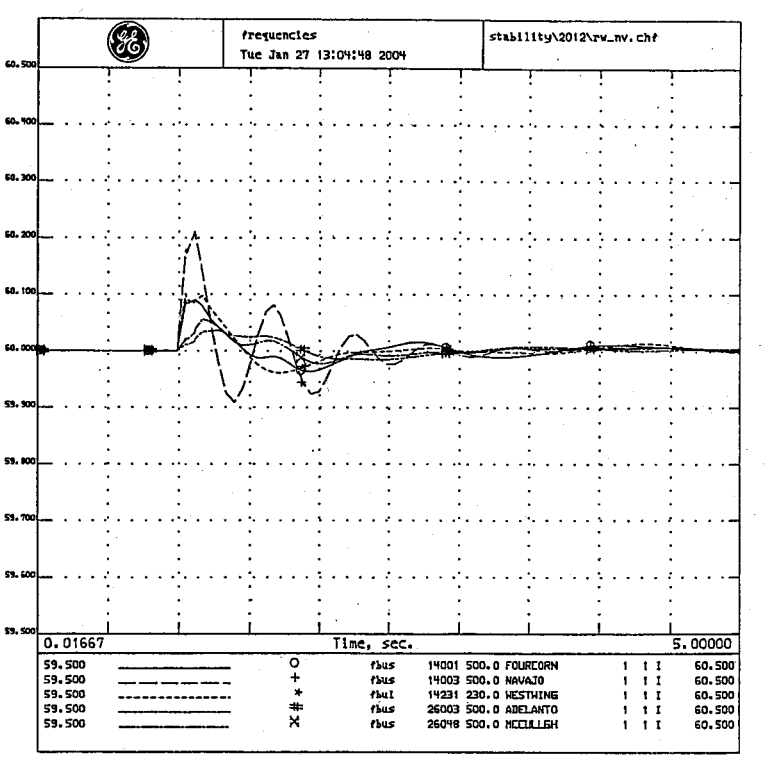

RWY FLT RW-NAV LINE OUT
2012 HS1A APROVED BASE CASE
MAY 19, 2003
RWY-NAV STAB; 1/03; T=0 3P FLT RWY500; 6% FLT DMPING;FLSH CAPS
NAV-MCC/MKP,MKP-ELD;4C CLR FLT W/RWY-NAV;8C REIN;2012.dyd;WSCC.bat

ALL COMMENTS RECEIVED FROM THE TSS REVIEW HAVE BEEN ADDED.
MOST RECENT VERSION OF THE MASTER DYNAMICS FILE IS USED, WHICH
CONTAINS THE NEW GOVERNOR MODELING RECEIVED IN RESPONSE TO THE
NOVEMBER 7, 2002 DATA REQUEST.

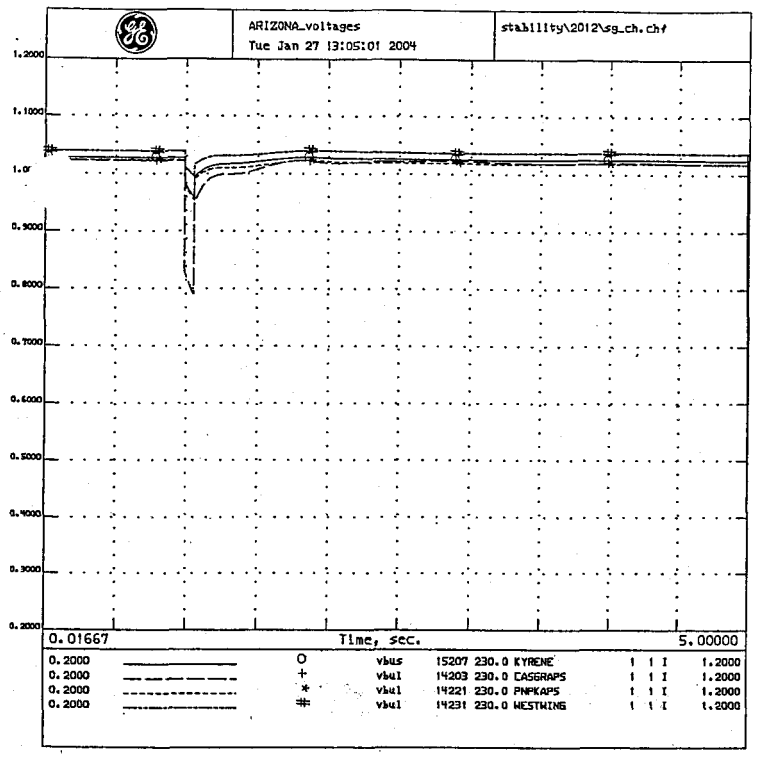

SAGUARO FLT SAG-CH LINE OUT
2012 HS1A APROVED BASE CASE
MAY 19, 2003
SAG-CH STAB #1; 01/03; T=0 3P FLT SAG500;
4C CLR FLT W/SAG-CH;2012.dyd;HSCC.bpt

ALL COMMENTS RECEIVED FROM THE TSS REVIEW HAVE BEEN ADDED.
MOST RECENT VERSION OF THE MASTER DYNAMICS FILE IS USED, WHICH
CONTAINS THE NEW GOVERNOR MODELING RECEIVED IN RESPONSE TO THE
NOVEMBER 7, 2002 DATA REQUEST.

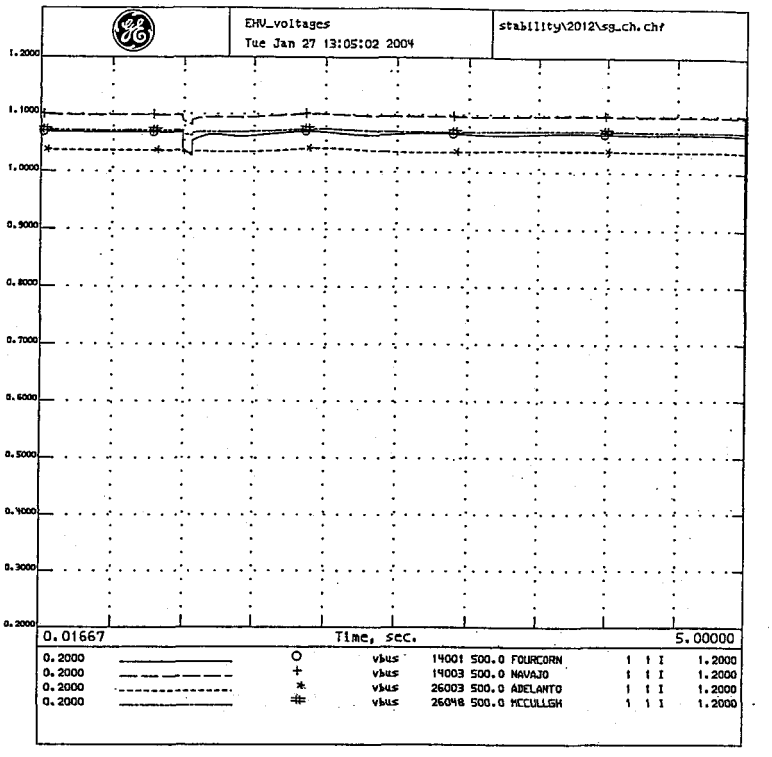

SAGUARO FLT SAG-CH LINE OUT
2012 HS1A APROVED BASE CASE
MAY 19, 2003
SAG-CH STAB #1; 01/03; T=0 3P FLT SAG500;
4C CLR FLT W/SAG-CH;2012.dyd;HSCC.bpt

ALL COMMENTS RECEIVED FROM THE TSS REVIEW HAVE BEEN ADDED.
MOST RECENT VERSION OF THE MASTER DYNAMICS FILE IS USED, WHICH
CONTAINS THE NEW GOVERNOR MODELING RECEIVED IN RESPONSE TO THE
NOVEMBER 7, 2002 DATA REQUEST.

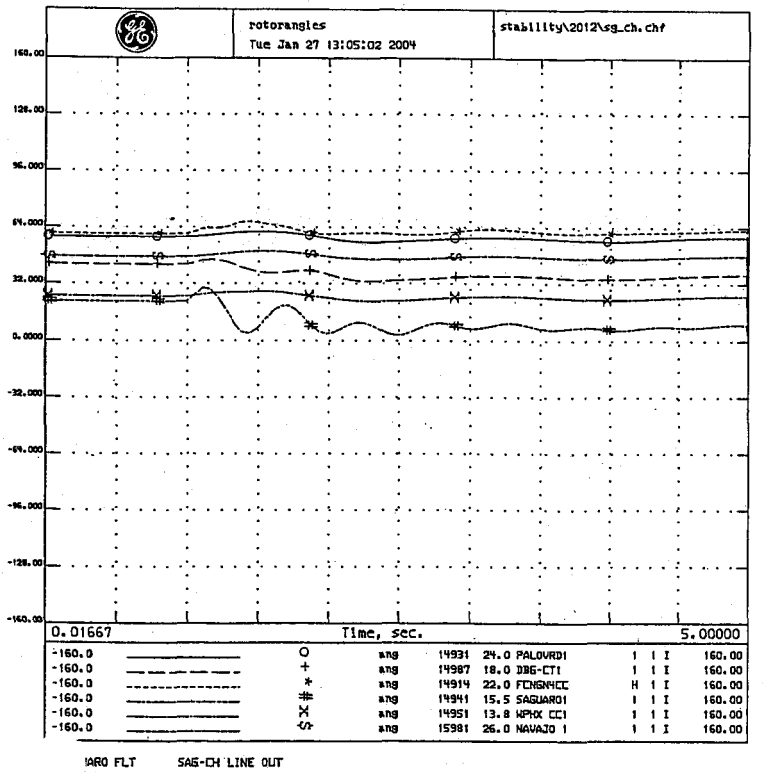

SAGUARO FLT SAG-CH LINE OUT
2012 HS1A APROVED BASE CASE
MAY 19, 2003
SAG-CH STAB #1; 01/03; T=0 3P FLT SAG500;
4C CLR FLT W/SAG-CH;2012.dyd;HSCC.bpt

ALL COMMENTS RECEIVED FROM THE TSS REVIEW HAVE BEEN ADDED.
MOST RECENT VERSION OF THE MASTER DYNAMICS FILE IS USED, WHICH
CONTAINS THE NEW GOVERNOR MODELING RECEIVED IN RESPONSE TO THE
NOVEMBER 7, 2002 DATA REQUEST.

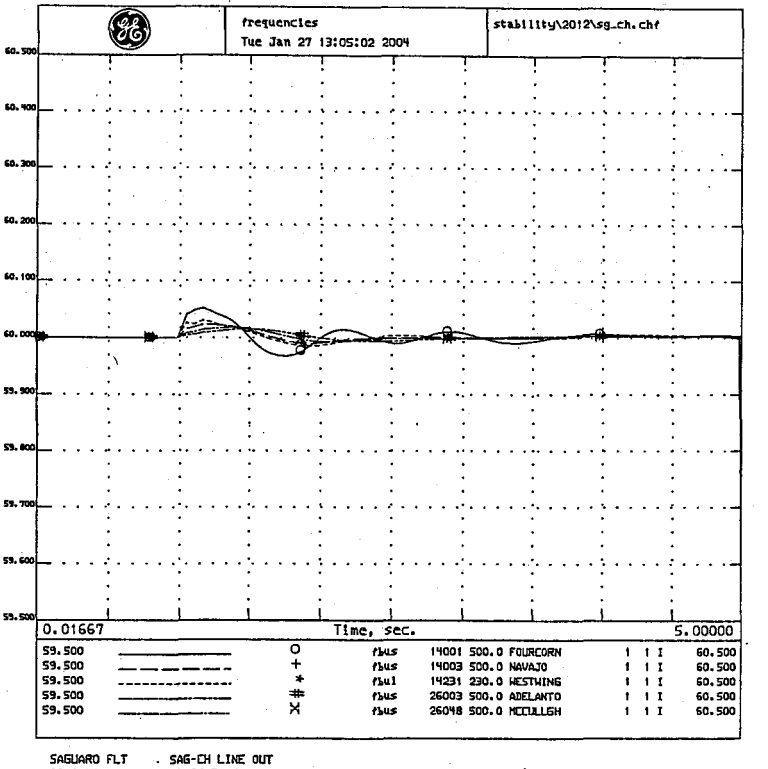

SAGUARO FLT SAG-CH LINE OUT
2012 HS1A APROVED BASE CASE
MAY 19, 2003
SAG-CH STAB #1; 01/03; T=0 3P FLT SAG500;
4C CLR FLT W/SAG-CH;2012.dyd;HSCC.bpt

ALL COMMENTS RECEIVED FROM THE TSS REVIEW HAVE BEEN ADDED.
MOST RECENT VERSION OF THE MASTER DYNAMICS FILE IS USED, WHICH
CONTAINS THE NEW GOVERNOR MODELING RECEIVED IN RESPONSE TO THE
NOVEMBER 7, 2002 DATA REQUEST.

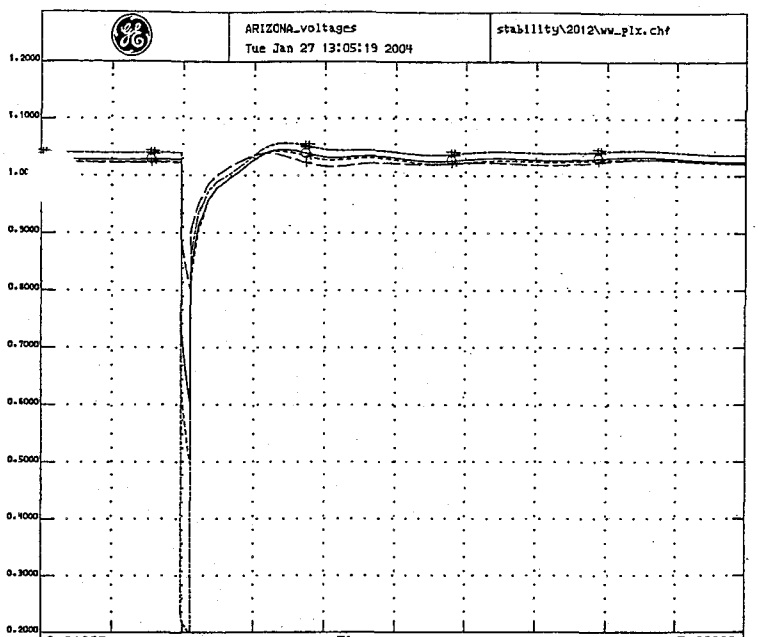

0.2000		O	vbus	15207	230.0	KYRENE	1	1	1.2000
0.2000		+	vbul	14203	230.0	CASGRAPS	1	1	1.2000
0.2000		*	vbul	14221	230.0	PNPKAPS	1	1	1.2000
0.2000		#	vbul	14231	230.0	WESTWING	1	1	1.2000

WESTERN ELECTRICITY COORDINATING COUNCIL
WW. FLT. WW-PV line out
MAY 19, 2003
WWG-YAV STAB; 1/03; T=0 3P FLT WWG500;FLSH CAPS MKP-YAV/YAV-WWG,
NAV-MKP/WWG;4C CLR FLT W/WWG-PAL;8C REIN;2012.dyd WSCC.bat

ALL COMMENTS RECEIVED FROM THE TSS REVIEW HAVE BEEN ADDED.
MOST RECENT VERSION OF THE MASTER DYNAMICS FILE IS USED, WHICH
CONTAINS THE NEW GOVERNOR MODELING RECEIVED IN RESPONSE TO THE
NOVEMBER 7, 2002 DATA REQUEST.

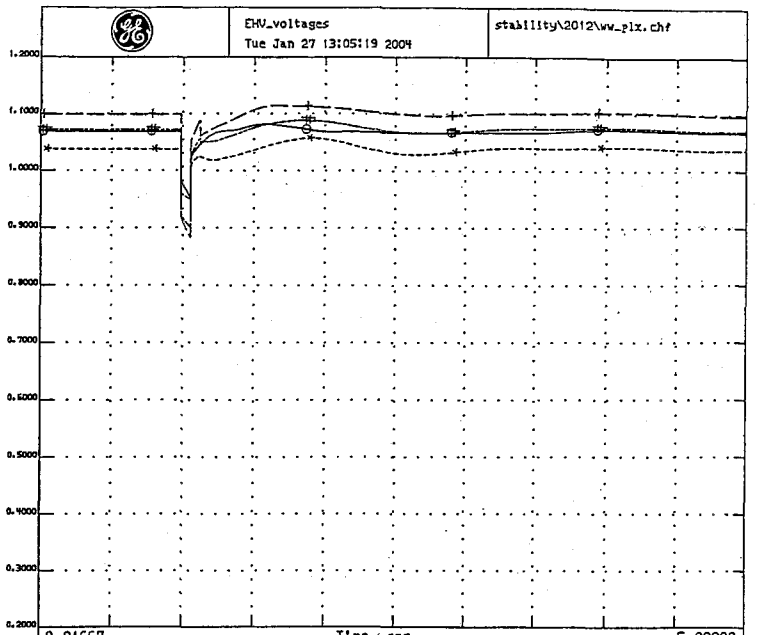

0.2000		O	vbus	14001	500.0	FOURCORN	1	1 I	1.2000
0.2000		+	vbus	14003	500.0	NAVAJO	1	1 I	1.2000
0.2000		*	vbus	26003	500.0	ADELANTO	1	1 I	1.2000
0.2000		#	vbus	26048	500.0	MCCULLGH	1	1 I	1.2000

WESTERN ELECTRICITY COORDINATING COUNCIL
WW. FLT. WW-PV line out
MAY 19, 2003
WWG-YAV STAB; 1/03; T=0 3P FLT WWG500;FLSH CAPS MKP-YAV/YAV-WWG,
NAV-MKP/WWG;4C CLR FLT W/WWG-PAL;8C REIN;2012.dyd WSCC.bat

ALL COMMENTS RECEIVED FROM THE TSS REVIEW HAVE BEEN ADDED.
MOST RECENT VERSION OF THE MASTER DYNAMICS FILE IS USED, WHICH
CONTAINS THE NEW GOVERNOR MODELING RECEIVED IN RESPONSE TO THE
NOVEMBER 7, 2002 DATA REQUEST.

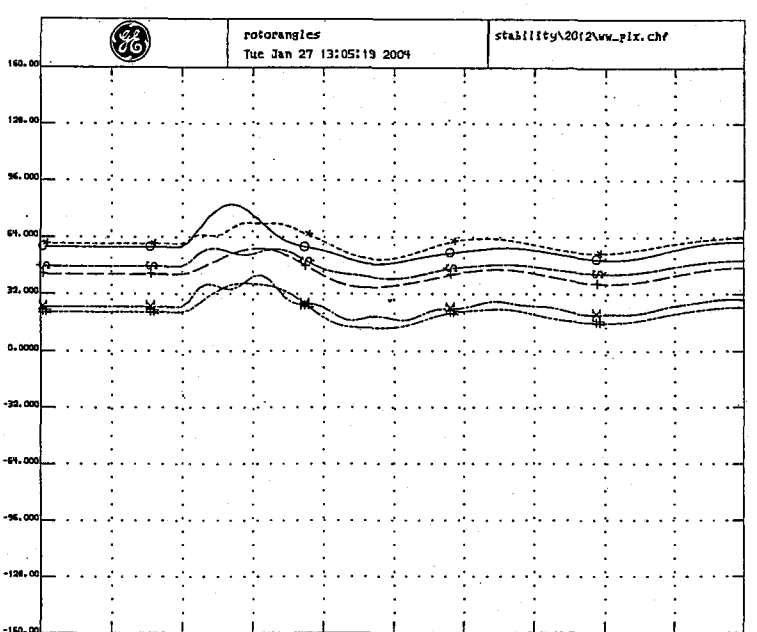

-160.0		O	ang	14931	24.0	PALOVRD1	1	1 I	160.00
-160.0		+	ang	14987	18.0	DBG-CT1	1	1 I	160.00
-160.0		*	ang	14914	22.0	FCNGNNCC	H	1 I	160.00
-160.0		#	ang	14941	15.5	SAGUARO1	1	1 I	160.00
-160.0		X	ang	14951	13.8	WPHX CC1	1	1 I	160.00
-160.0		◇	ang	15981	26.0	NAVAJO 1	1	1 I	160.00

TERN ELECTRICITY COORDINATING COUNCIL
.. FLT. WW-PV line out
MAY 19, 2003
WWG-YAV STAB; 1/03; T=0 3P FLT WWG500;FLSH CAPS MKP-YAV/YAV-WWG,
NAV-MKP/WWG;4C CLR FLT W/WWG-PAL;8C REIN;2012.dyd WSCC.bat

ALL COMMENTS RECEIVED FROM THE TSS REVIEW HAVE BEEN ADDED.
MOST RECENT VERSION OF THE MASTER DYNAMICS FILE IS USED, WHICH
CONTAINS THE NEW GOVERNOR MODELING RECEIVED IN RESPONSE TO THE
NOVEMBER 7, 2002 DATA REQUEST.

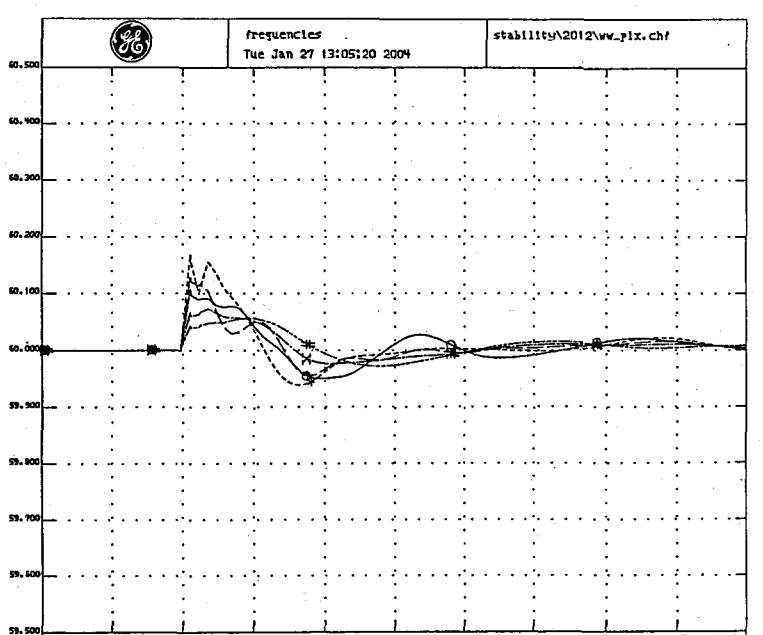

59.500		O	fbus	14001	500.0	FOURCORN	1	1 I	60.500
59.500		+	fbus	14003	500.0	NAVAJO	1	1 I	60.500
59.500		*	fbul	14231	230.0	WESTWING	1	1 I	60.500
59.500		#	fbus	26003	500.0	ADELANTO	1	1 I	60.500
59.500		X	fbus	26048	500.0	MCCULLGH	1	1 I	60.500

WESTERN ELECTRICITY COORDINATING COUNCIL
WW. FLT. WW-PV line out
MAY 19, 2003
WWG-YAV STAB; 1/03; T=0 3P FLT WWG500;FLSH CAPS MKP-YAV/YAV-WWG,
NAV-MKP/WWG;4C CLR FLT W/WWG-PAL;8C REIN;2012.dyd WSCC.bat

ALL COMMENTS RECEIVED FROM THE TSS REVIEW HAVE BEEN ADDED.
MOST RECENT VERSION OF THE MASTER DYNAMICS FILE IS USED, WHICH
CONTAINS THE NEW GOVERNOR MODELING RECEIVED IN RESPONSE TO THE
NOVEMBER 7, 2002 DATA REQUEST.

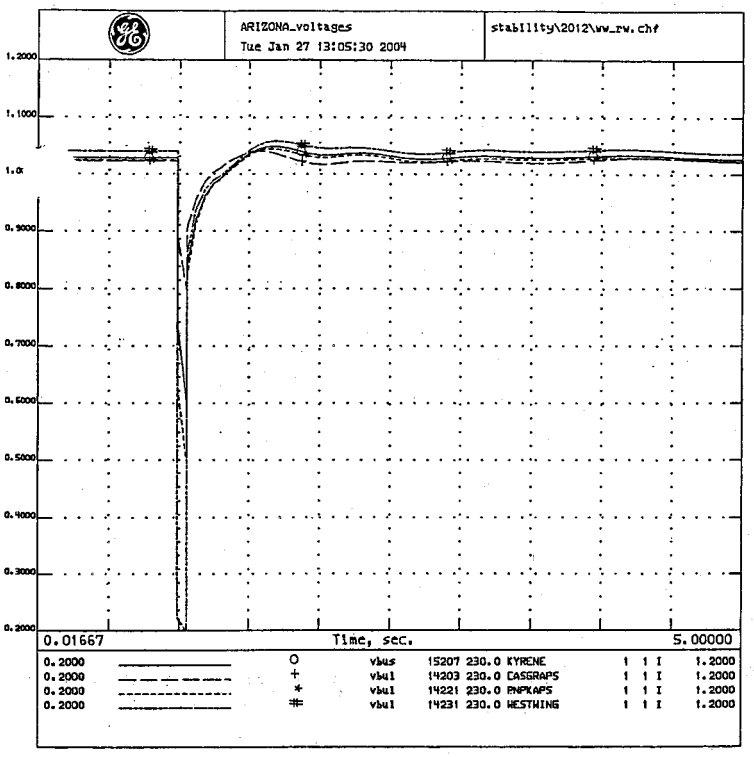

WESTERN ELECTRICITY COORDINATING COUNCIL
WW. FLT. WW-Rwy line out
MAY 19, 2003
WWG-RW STAB; 1/03; T=0 3P FLT WWG500;FLSH CAPS MKP-YAV/YAV-WWG,
NAV-MKP/WWG;4C CLR FLT W/WWG-RWY;8C REIN;2012.dyd WSCC.bat

ALL COMMENTS RECEIVED FROM THE TSS REVIEW HAVE BEEN ADDED.
MOST RECENT VERSION OF THE MASTER DYNAMICS FILE IS USED, WHICH
CONTAINS THE NEW GOVERNOR MODELING RECEIVED IN RESPONSE TO THE
NOVEMBER 7, 2002 DATA REQUEST.

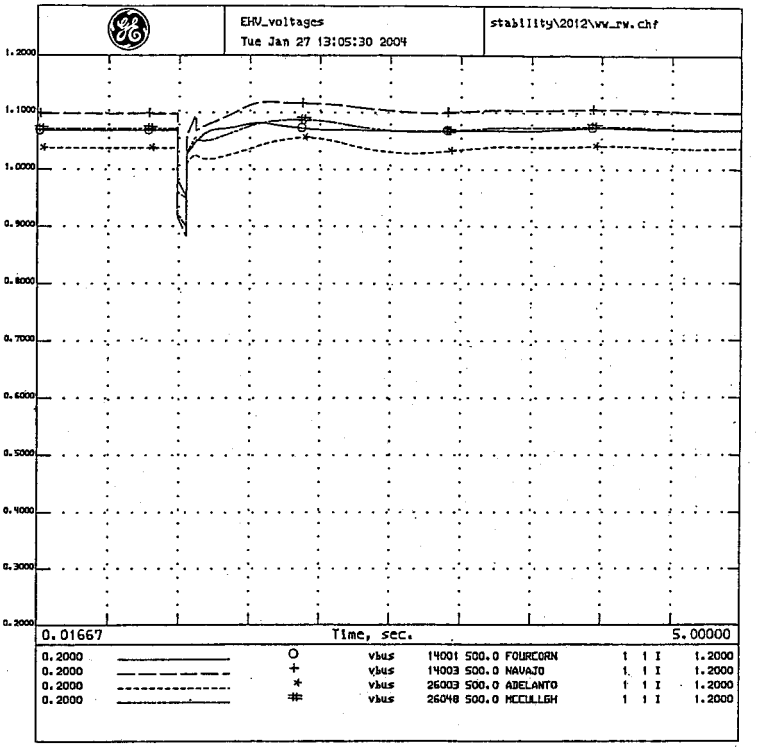

WESTERN ELECTRICITY COORDINATING COUNCIL
WW. FLT. WW-Rwy line out
MAY 19, 2003
WWG-RW STAB; 1/03; T=0 3P FLT WWG500;FLSH CAPS MKP-YAV/YAV-WWG,
NAV-MKP/WWG;4C CLR FLT W/WWG-RWY;8C REIN;2012.dyd WSCC.bat

ALL COMMENTS RECEIVED FROM THE TSS REVIEW HAVE BEEN ADDED.
MOST RECENT VERSION OF THE MASTER DYNAMICS FILE IS USED, WHICH
CONTAINS THE NEW GOVERNOR MODELING RECEIVED IN RESPONSE TO THE
NOVEMBER 7, 2002 DATA REQUEST.

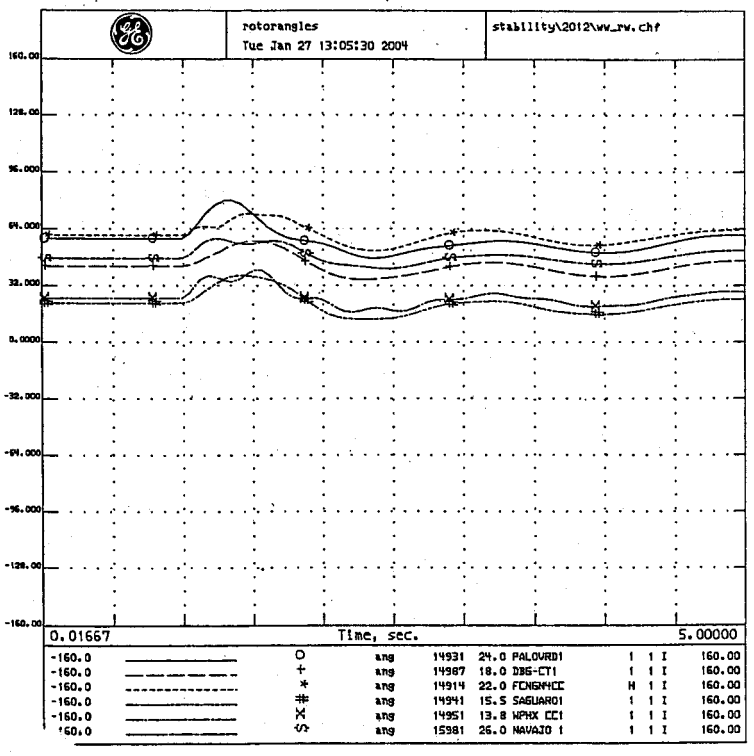

STERN ELECTRICITY COORDINATING COUNCIL
WW. FLT. WW-Rwy line out
MAY 19, 2003
WWG-RW STAB; 1/03; T=0 3P FLT WWG500;FLSH CAPS MKP-YAV/YAV-WWG,
NAV-MKP/WWG;4C CLR FLT W/WWG-RWY;8C REIN;2012.dyd WSCC.bat

ALL COMMENTS RECEIVED FROM THE TSS REVIEW HAVE BEEN ADDED.
MOST RECENT VERSION OF THE MASTER DYNAMICS FILE IS USED, WHICH
CONTAINS THE NEW GOVERNOR MODELING RECEIVED IN RESPONSE TO THE
NOVEMBER 7, 2002 DATA REQUEST.

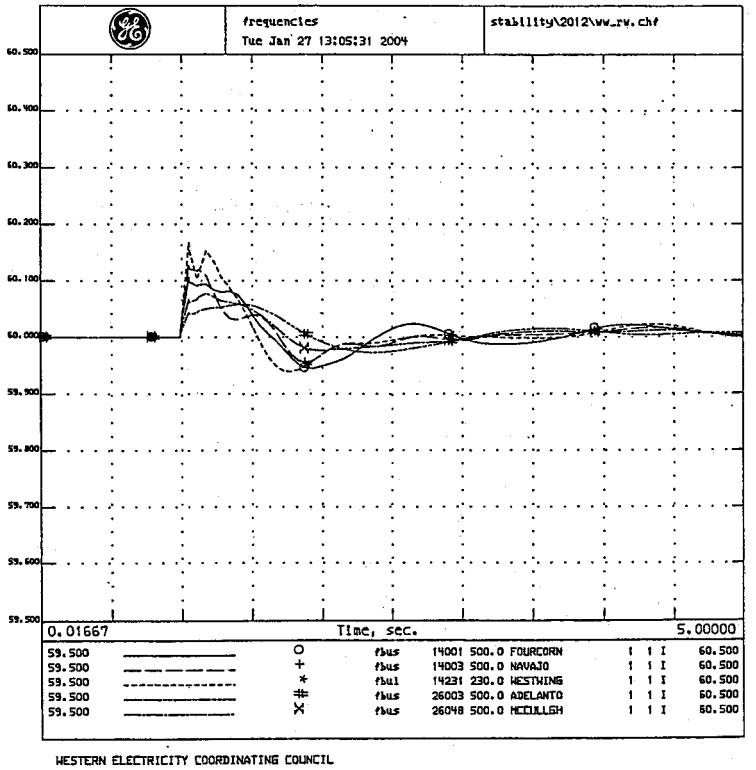

WESTERN ELECTRICITY COORDINATING COUNCIL
WW. FLT. WW-Rwy line out
MAY 19, 2003
WWG-RW STAB; 1/03; T=0 3P FLT WWG500;FLSH CAPS MKP-YAV/YAV-WWG,
NAV-MKP/WWG;4C CLR FLT W/WWG-RWY;8C REIN;2012.dyd WSCC.bat

ALL COMMENTS RECEIVED FROM THE TSS REVIEW HAVE BEEN ADDED.
MOST RECENT VERSION OF THE MASTER DYNAMICS FILE IS USED, WHICH
CONTAINS THE NEW GOVERNOR MODELING RECEIVED IN RESPONSE TO THE
NOVEMBER 7, 2002 DATA REQUEST.

C28

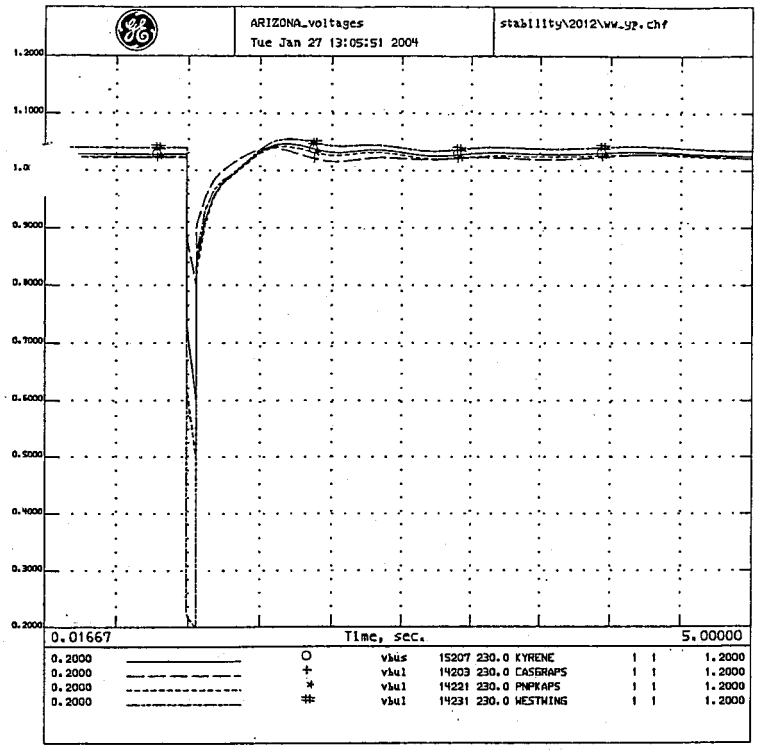

WESTERN ELECTRICITY COORDINATING COUNCIL
WW. FLT. WW-YAV line out
MAY 19, 2003
WWG-YAV STAB; 1/03; T=0 3P FLT WWG500;FLSH CAPS MKP-YAV/YAV-WWG,
NAV-MKP/WWG;4C CLR FLT W/WWG-YAV;8C REIN;2012.dyd WSCC.bat

ALL COMMENTS RECEIVED FROM THE TSS REVIEW HAVE BEEN ADDED.
MOST RECENT VERSION OF THE MASTER DYNAMICS FILE IS USED, WHICH
CONTAINS THE NEW GOVERNOR MODELING RECEIVED IN RESPONSE TO THE
NOVEMBER 7, 2002 DATA REQUEST.

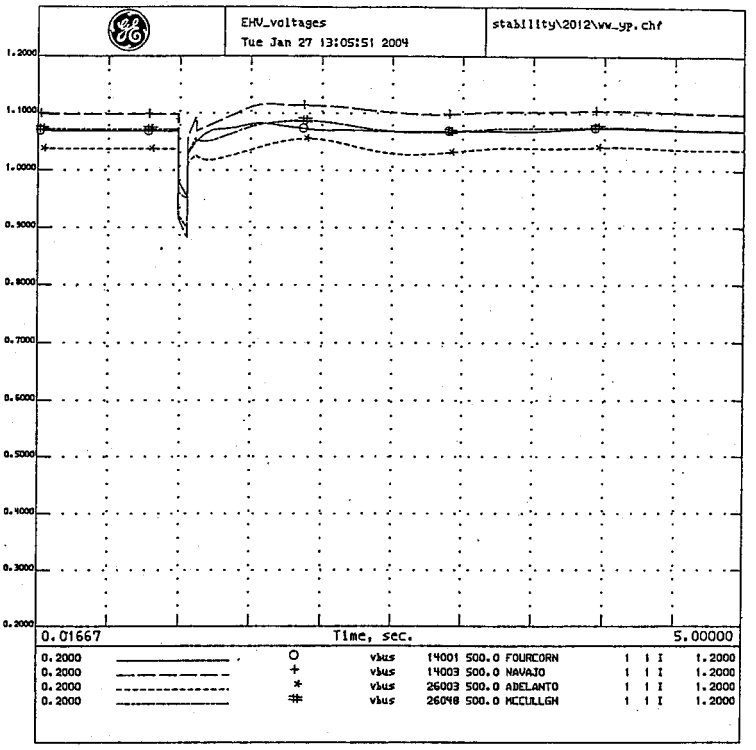

WESTERN ELECTRICITY COORDINATING COUNCIL
WW. FLT. WW-YAV line out
MAY 19, 2003
WWG-YAV STAB; 1/03; T=0 3P FLT WWG500;FLSH CAPS MKP-YAV/YAV-WWG,
NAV-MKP/WWG;4C CLR FLT W/WWG-YAV;8C REIN;2012.dyd WSCC.bat

ALL COMMENTS RECEIVED FROM THE TSS REVIEW HAVE BEEN ADDED.
MOST RECENT VERSION OF THE MASTER DYNAMICS FILE IS USED, WHICH
CONTAINS THE NEW GOVERNOR MODELING RECEIVED IN RESPONSE TO THE
NOVEMBER 7, 2002 DATA REQUEST.

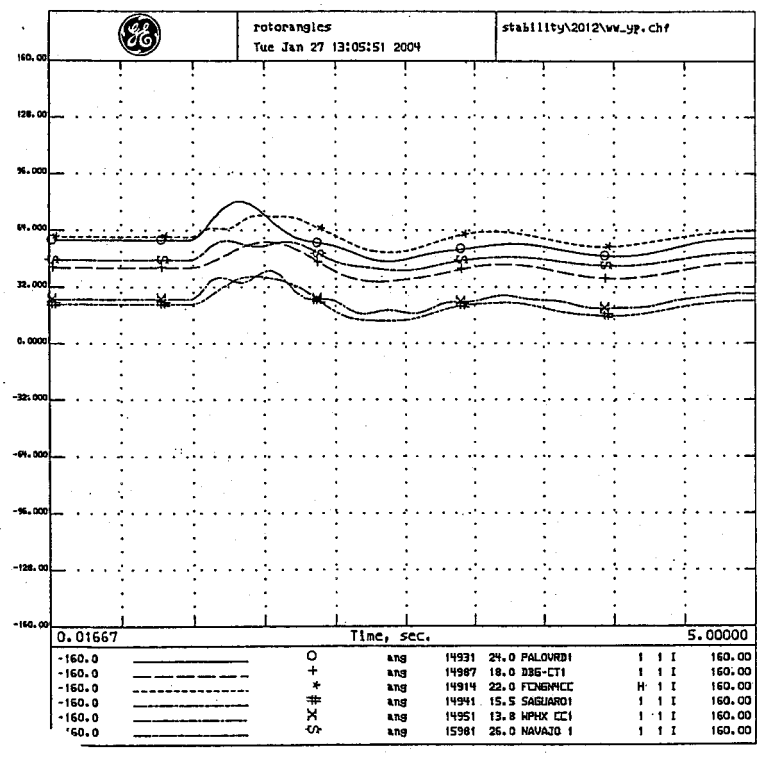

STERN ELECTRICITY COORDINATING COUNCIL
WW. FLT. WW-YAV line out
MAY 19, 2003
WWG-YAV STAB; 1/03; T=0 3P FLT WWG500;FLSH CAPS MKP-YAV/YAV-WWG,
NAV-MKP/WWG;4C CLR FLT W/WWG-YAV;8C REIN;2012.dyd WSCC.bat

ALL COMMENTS RECEIVED FROM THE TSS REVIEW HAVE BEEN ADDED.
MOST RECENT VERSION OF THE MASTER DYNAMICS FILE IS USED, WHICH
CONTAINS THE NEW GOVERNOR MODELING RECEIVED IN RESPONSE TO THE
NOVEMBER 7, 2002 DATA REQUEST.

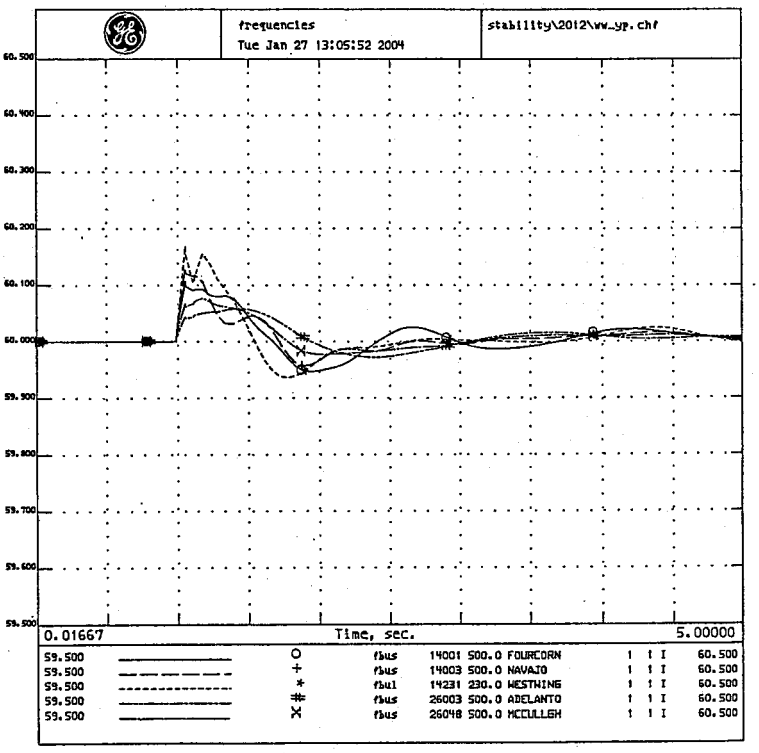

WESTERN ELECTRICITY COORDINATING COUNCIL
WW. FLT. WW-YAV line out
MAY 19, 2003
WWG-YAV STAB; 1/03; T=0 3P FLT WWG500;FLSH CAPS MKP-YAV/YAV-WWG,
NAV-MKP/WWG;4C CLR FLT W/WWG-YAV;8C REIN;2012.dyd WSCC.bat

ALL COMMENTS RECEIVED FROM THE TSS REVIEW HAVE BEEN ADDED.
MOST RECENT VERSION OF THE MASTER DYNAMICS FILE IS USED, WHICH
CONTAINS THE NEW GOVERNOR MODELING RECEIVED IN RESPONSE TO THE
NOVEMBER 7, 2002 DATA REQUEST.

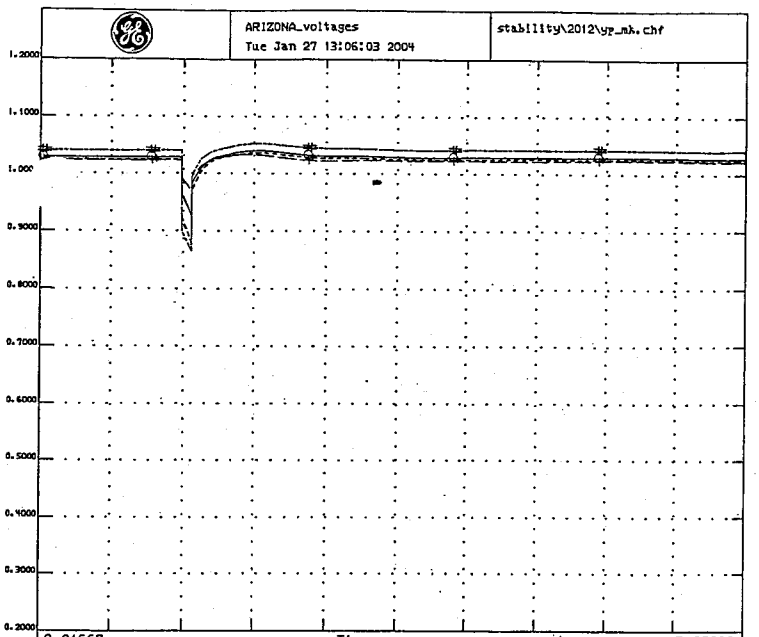

0.2000	———	○	vbus	15207	230.0	KYRENE	1	1	I	1.2000
0.2000	— — —	+	vbul	14203	230.0	CASGRAPS	1	1	I	1.2000
0.2000	- - - -	*	vbul	14221	230.0	PNPKAPS	1	1	I	1.2000
0.2000	———	#	vbul	14231	230.0	WESTWING	1	1	I	1.2000

WESTERN ELECTRICITY COORDINATING COUNCIL
YAV. FLT. Yav-Moen line out
MAY 19, 2003
YAV STAB; 1/03; T=0 3P FLT WWG500;FLSH CAPS MKP-YAV/YAV-WWG,
NAV-MKP/WWG;4C CLR FLT W/YAV-MNK;8C REIN;2012.dyd WSCC.bat

ALL COMMENTS RECEIVED FROM THE TSS REVIEW HAVE BEEN ADDED.
MOST RECENT VERSION OF THE MASTER DYNAMICS FILE IS USED, WHICH
CONTAINS THE NEW GOVERNOR MODELING RECEIVED IN RESPONSE TO THE
NOVEMBER 7, 2002 DATA REQUEST.

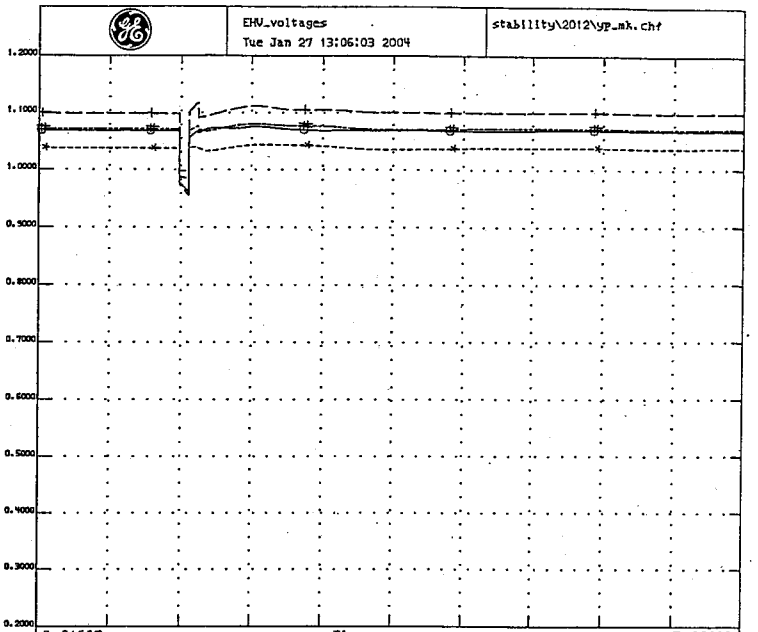

0.2000	———	○	vbus	14001	500.0	FOURCORN	1	1	I	1.2000
0.2000	— — —	+	vbus	14003	500.0	NAVAJO	1	1	I	1.2000
0.2000	- - - -	*	vbus	26003	500.0	ADELANTO	1	1	I	1.2000
0.2000	———	#	vbus	26048	500.0	MCCULLGH	1	1	I	1.2000

WESTERN ELECTRICITY COORDINATING COUNCIL
YAV. FLT. Yav-Moen line out
MAY 19, 2003
YAV STAB; 1/03; T=0 3P FLT WWG500;FLSH CAPS MKP-YAV/YAV-WWG,
NAV-MKP/WWG;4C CLR FLT W/YAV-MNK;8C REIN;2012.dyd WSCC.bat

ALL COMMENTS RECEIVED FROM THE TSS REVIEW HAVE BEEN ADDED.
MOST RECENT VERSION OF THE MASTER DYNAMICS FILE IS USED, WHICH
CONTAINS THE NEW GOVERNOR MODELING RECEIVED IN RESPONSE TO THE
NOVEMBER 7, 2002 DATA REQUEST.

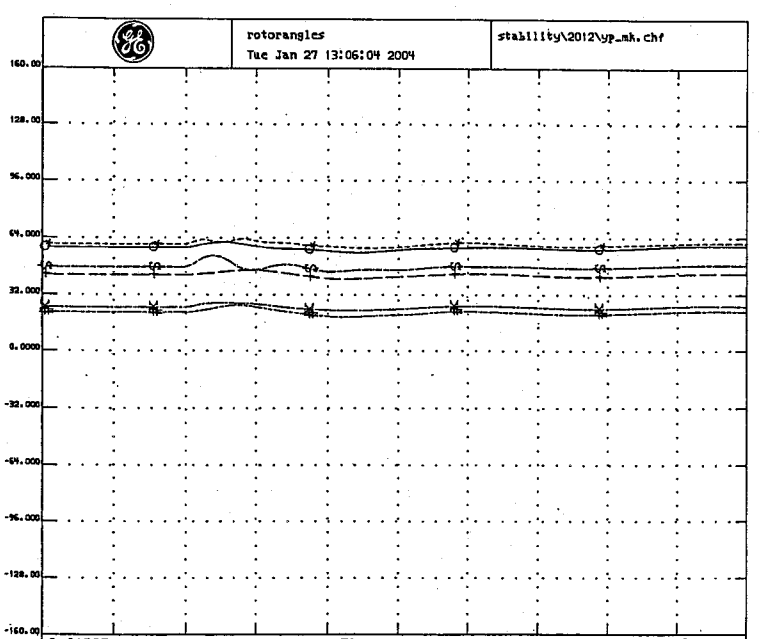

-160.0	———	○	ang	14931	24.0	PALOVRD1	1	1	I	160.00
-160.0	— — —	+	ang	14987	18.0	DBG-CT1	1	1	I	160.00
-160.0	- - - -	*	ang	14914	22.0	FCNGNHCC	H	1	I	160.00
-160.0	———	#	ang	14941	15.5	SAGUARO1	1	1	I	160.00
-160.0	———	✕	ang	14951	13.8	WPHX CC1	1	1	I	160.00
-160.0	———	◇	ang	15981	26.0	NAVAJO 1	1	1	I	160.00

ERN ELECTRICITY COORDINATING COUNCIL
. FLT. Yav-Moen line out
nAY 19, 2003
YAV STAB; 1/03; T=0 3P FLT WWG500;FLSH CAPS MKP-YAV/YAV-WWG,
NAV-MKP/WWG;4C CLR FLT W/YAV-MNK;8C REIN;2012.dyd WSCC.bat

ALL COMMENTS RECEIVED FROM THE TSS REVIEW HAVE BEEN ADDED.
MOST RECENT VERSION OF THE MASTER DYNAMICS FILE IS USED, WHICH
CONTAINS THE NEW GOVERNOR MODELING RECEIVED IN RESPONSE TO THE
NOVEMBER 7, 2002 DATA REQUEST.

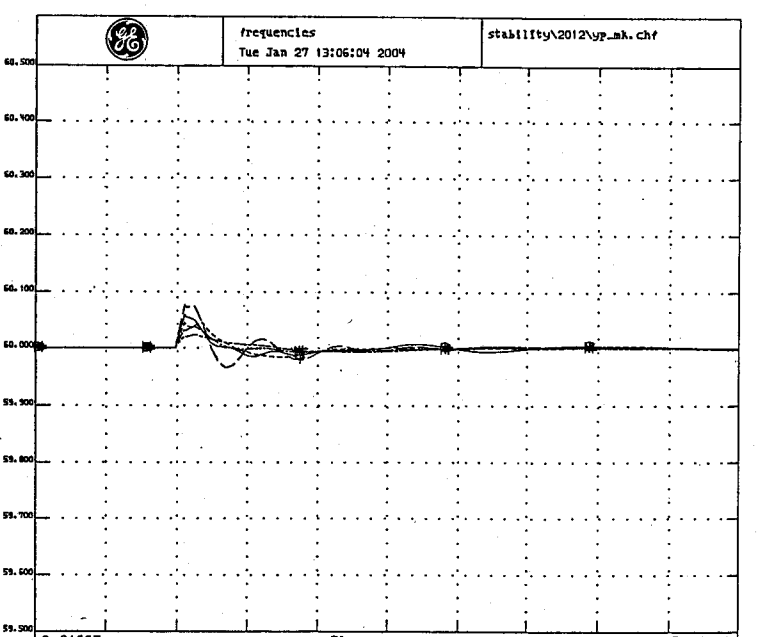

59.500	———	○	fbus	14001	500.0	FOURCORN	1	1	I	60.500
59.500	— — —	+	fbus	14003	500.0	NAVAJO	1	1	I	60.500
59.500	- - - -	*	fbul	14231	230.0	WESTWING	1	1	I	60.500
59.500	———	#	fbus	26003	500.0	ADELANTO	1	1	I	60.500
59.500	———	✕	fbus	26048	500.0	MCCULLGH	1	1	I	60.500

WESTERN ELECTRICITY COORDINATING COUNCIL
YAV. FLT. Yav-Moen line out
MAY 19, 2003
YAV STAB; 1/03; T=0 3P FLT WWG500;FLSH CAPS MKP-YAV/YAV-WWG,
NAV-MKP/WWG;4C CLR FLT W/YAV-MNK;8C REIN;2012.dyd WSCC.bat

ALL COMMENTS RECEIVED FROM THE TSS REVIEW HAVE BEEN ADDED.
MOST RECENT VERSION OF THE MASTER DYNAMICS FILE IS USED, WHICH
CONTAINS THE NEW GOVERNOR MODELING RECEIVED IN RESPONSE TO THE
NOVEMBER 7, 2002 DATA REQUEST.

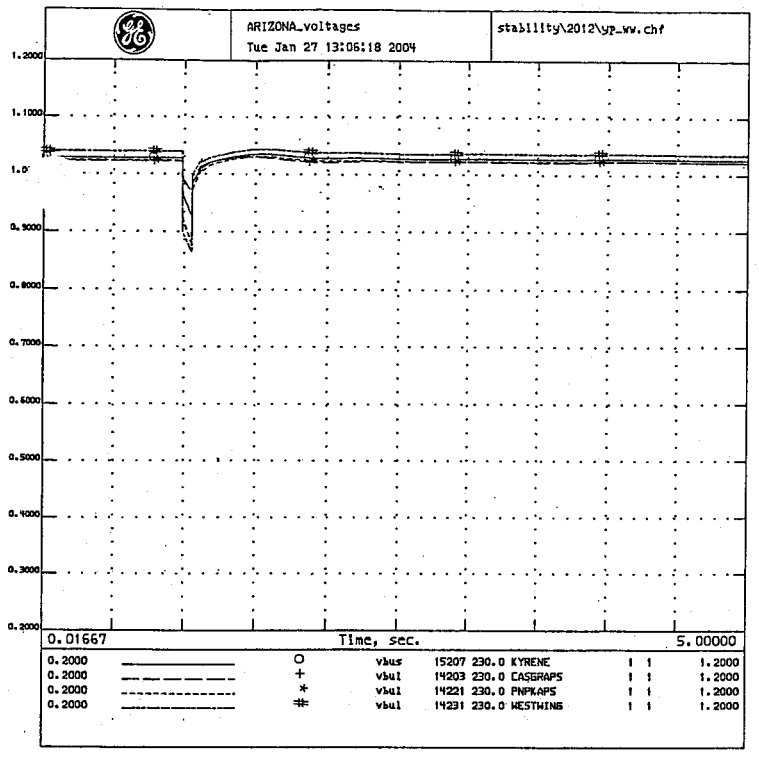

WESTERN ELECTRICITY COORDINATING COUNCIL
YAV. FLT. Yav-WW line out
MAY 19, 2003
YAV STAB; 1/03; T=0 3P FLT WWG500;FLSH CAPS MKP-YAV/YAV-WWG,
NAV-MKP/WWG;4C CLR FLT W/YAV-WW;8C REIN;2012.dyd WSCC.bat

ALL COMMENTS RECEIVED FROM THE TSS REVIEW HAVE BEEN ADDED.
MOST RECENT VERSION OF THE MASTER DYNAMICS FILE IS USED, WHICH
CONTAINS THE NEW GOVERNOR MODELING RECEIVED IN RESPONSE TO THE
NOVEMBER 7, 2002 DATA REQUEST.

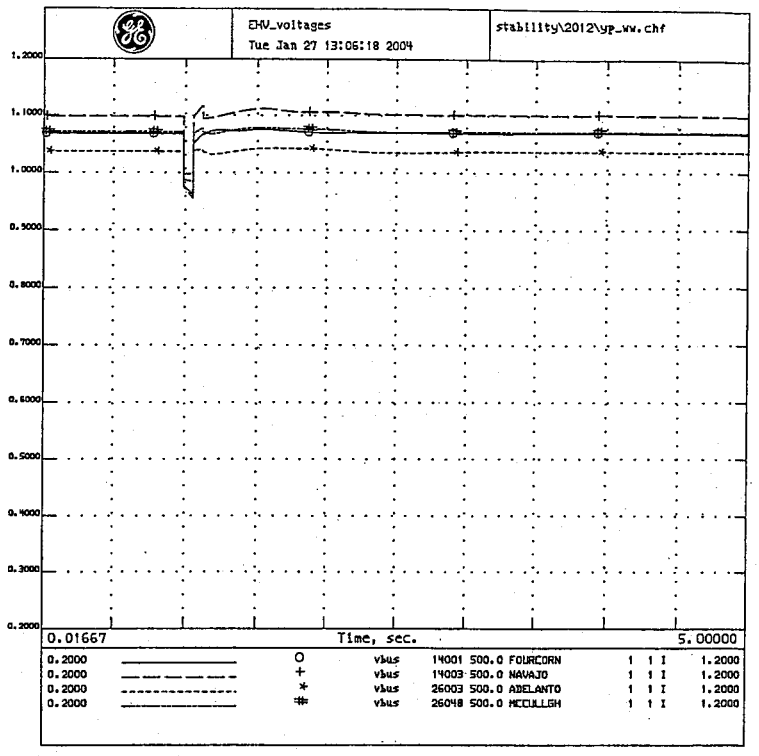

WESTERN ELECTRICITY COORDINATING COUNCIL
YAV. FLT. Yav-WW line out
MAY 19, 2003
YAV STAB; 1/03; T=0 3P FLT WWG500;FLSH CAPS MKP-YAV/YAV-WWG,
NAV-MKP/WWG;4C CLR FLT W/YAV-WW;8C REIN;2012.dyd WSCC.bat

ALL COMMENTS RECEIVED FROM THE TSS REVIEW HAVE BEEN ADDED.
MOST RECENT VERSION OF THE MASTER DYNAMICS FILE IS USED, WHICH
CONTAINS THE NEW GOVERNOR MODELING RECEIVED IN RESPONSE TO THE
NOVEMBER 7, 2002 DATA REQUEST.

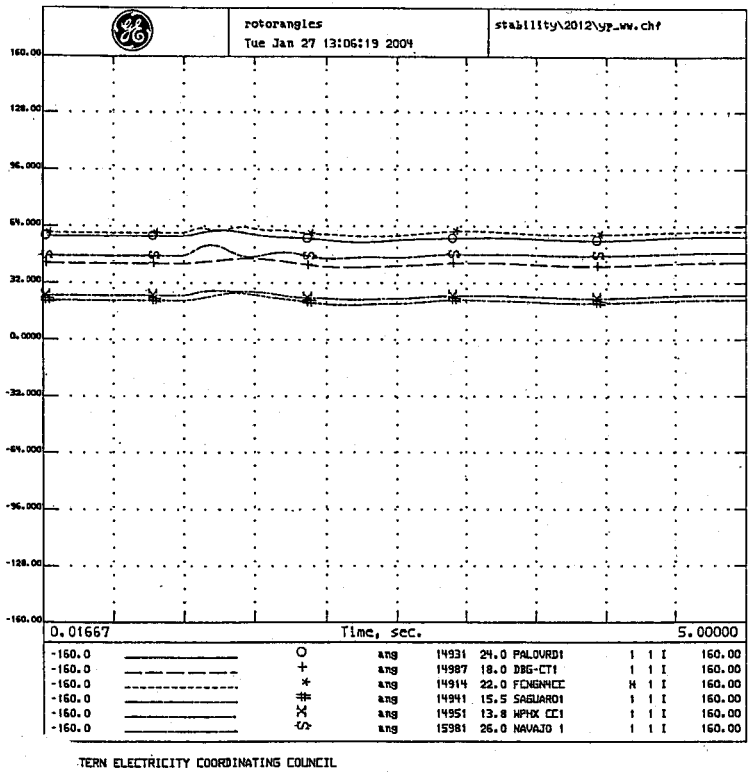

TERN ELECTRICITY COORDINATING COUNCIL
J. FLT. Yav-WW line out
MAY 19, 2003
YAV STAB; 1/03; T=0 3P FLT WWG500;FLSH CAPS MKP-YAV/YAV-WWG,
NAV-MKP/WWG;4C CLR FLT W/YAV-WW;8C REIN;2012.dyd WSCC.bat

ALL COMMENTS RECEIVED FROM THE TSS REVIEW HAVE BEEN ADDED.
MOST RECENT VERSION OF THE MASTER DYNAMICS FILE IS USED, WHICH
CONTAINS THE NEW GOVERNOR MODELING RECEIVED IN RESPONSE TO THE
NOVEMBER 7, 2002 DATA REQUEST.

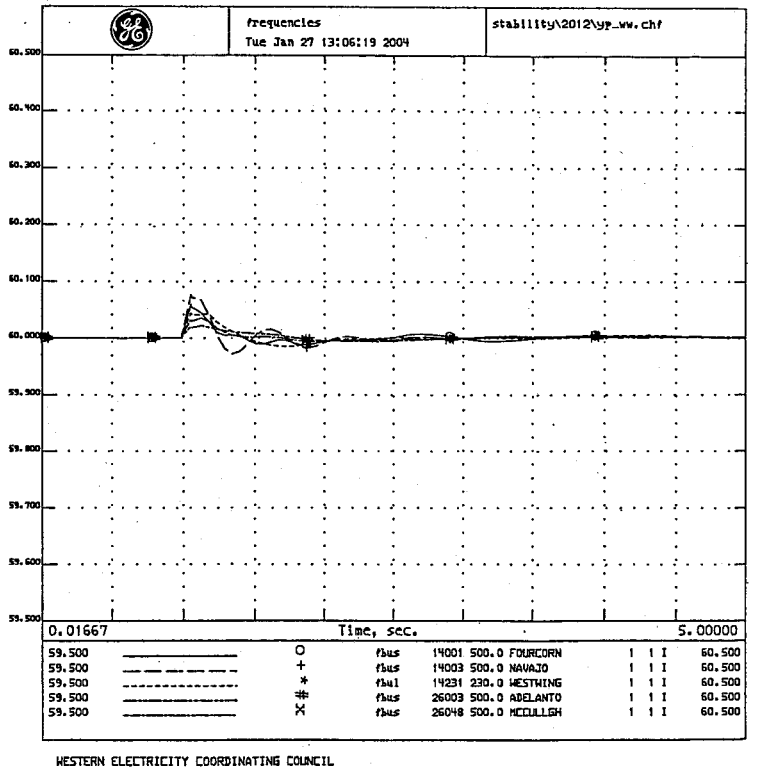

WESTERN ELECTRICITY COORDINATING COUNCIL
YAV. FLT. Yav-WW line out
MAY 19, 2003
YAV STAB; 1/03; T=0 3P FLT WWG500;FLSH CAPS MKP-YAV/YAV-WWG,
NAV-MKP/WWG;4C CLR FLT W/YAV-WW;8C REIN;2012.dyd WSCC.bat

ALL COMMENTS RECEIVED FROM THE TSS REVIEW HAVE BEEN ADDED.
MOST RECENT VERSION OF THE MASTER DYNAMICS FILE IS USED, WHICH
CONTAINS THE NEW GOVERNOR MODELING RECEIVED IN RESPONSE TO THE
NOVEMBER 7, 2002 DATA REQUEST.

APPENDIX D

Loop-in of the Jojoba-Kyrene 500-kV line into Rudd 500-kV substation

The interconnection was studied on the 2008 Base Case which includes the South East Valley project, the PV-TS5 500kV line, the TS5-TS1 230kV line, and the TS1-TS3 230kV line. Then it was studied on a case without those same projects, called Case 1. Both with and without were from a 2008 powerflow case. The studies were performed at both the Simultaneous Import Limit (SIL) and the Maximum Load Serving Capability (MLSC) point for each year. The effect of the addition was measured by the impact on the critical outages and critical elements which limit the load serving capability for each case.

	SIL	**Critical Outage/ Critical Element**	**MLSC**	**Critical Outage/ Critical Element**
2008 Base Case	10494 MW	Jojoba-Kyrene/ Voltage Collapse	13952 MW	Lincoln St.-W. Phx/ Glendale-Agua Fria
w/cut-in	9629 MW	Palo Verde-Rudd/ Jojoba-Rudd	13340	Palo Verde-Rudd/ Jojoba-Rudd
Drop in Load Serving Capability	**865 MW**		**612 MW**	

	SIL	**Critical Outage/ Critical Element**	**MLSC**	**Critical Outage/ Critical Element**
2008 Case 1	9762 MW	Jojoba-Kyrene/ Voltage Collapse	13332 MW	Palo Verde-Rudd/ Westwing-Surprise
w/cut-in	8420 MW	Palo Verde-Rudd/ Jojoba-Rudd	12419 MW	Palo Verde-Rudd/ Jojoba-Rudd
Drop in Load Serving Capability	**1342 MW**		**913 MW**	

From the above tables and the attached nomograms, addition of the Rudd cut-in of the Jojoba-Kyrene 500kV line significantly reduces the load serving capability of the system. With two 500kV lines feeding Rudd and one 500kV line continuing on from Rudd to feed Kyrene the loss of either 500kV line into Rudd will overload the other line, with the loss of the Palo Verde-Rudd 500kV line being slightly more detrimental than loss of the Jojoba-Rudd 500kV line. Both the 500kV lines into Rudd were studied with a 3000A rating.

Rudd Interconnection of Jojoba-Kyrene 500kV Line

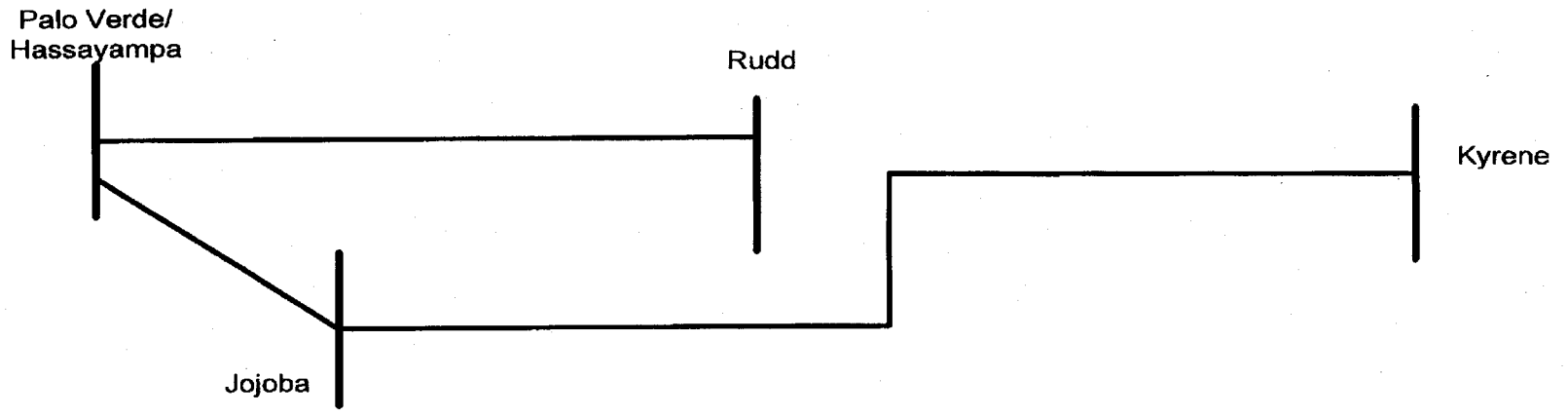

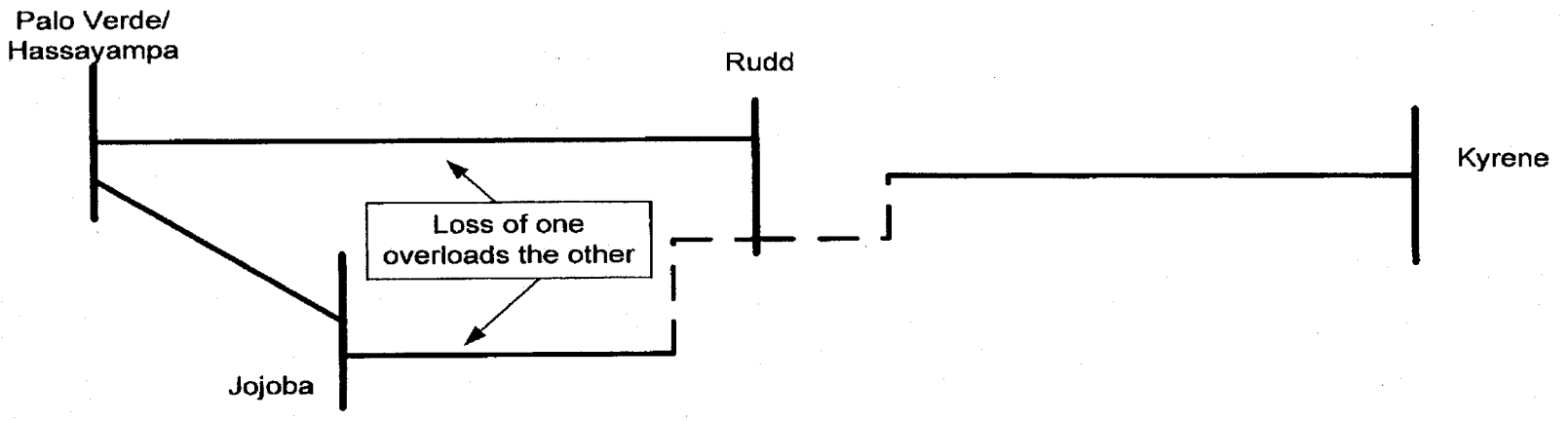

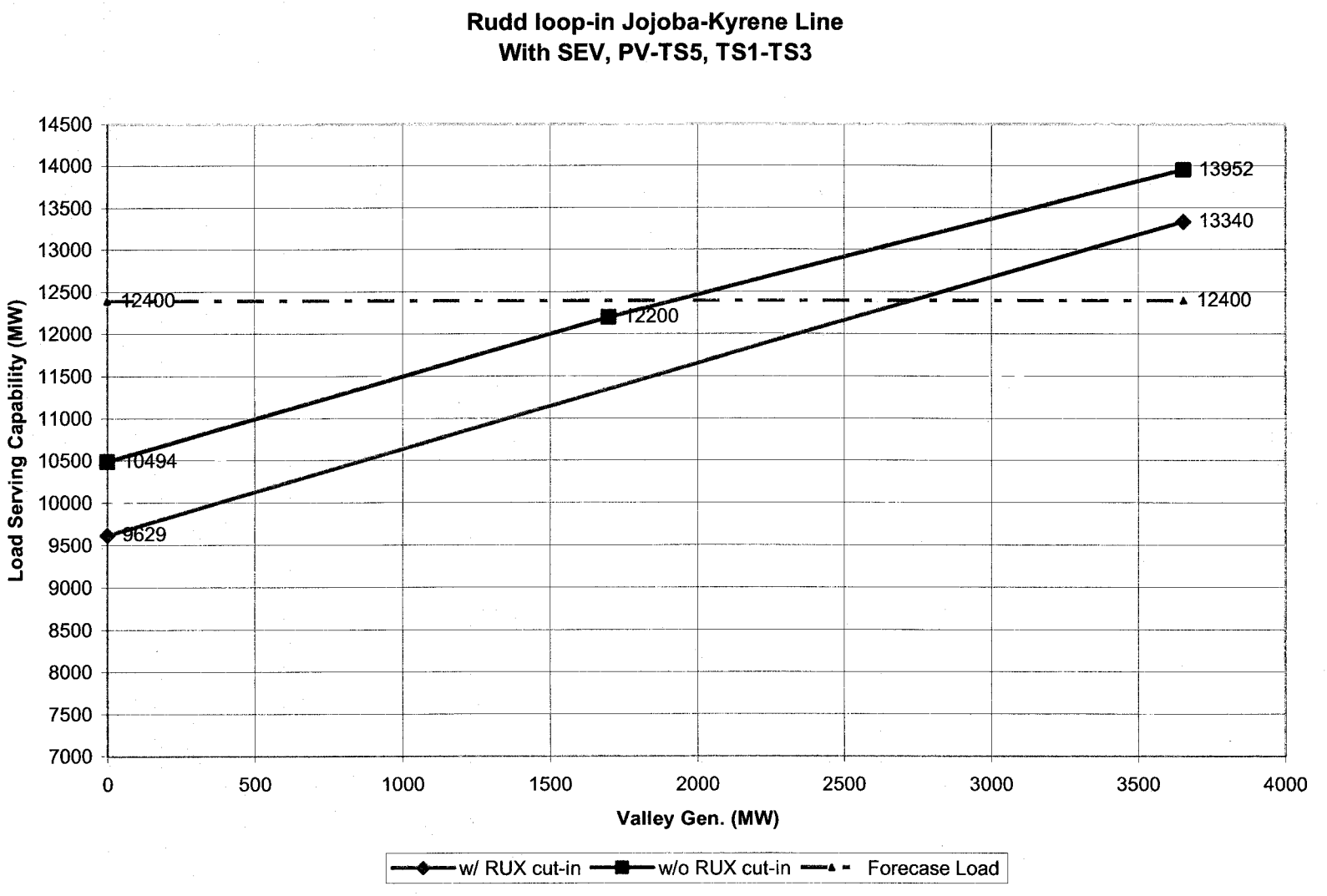
Rudd loop-in Jojoba-Kyrene Line
With SEV, PV-TS5, TS1-TS3
Load Serving Capability (MW)
14500
14000
13500
13000
12500
12000
11500
11000
10500
10000
9500
9000
8500
8000
7500
7000
0
500
1000
1500
2000
2500
3000
3500
4000
Valley Gen. (MW)
12400
12200
10494
9629
13952
13340
12400
w/ RUX cut-in
w/o RUX cut-in
Forecase Load

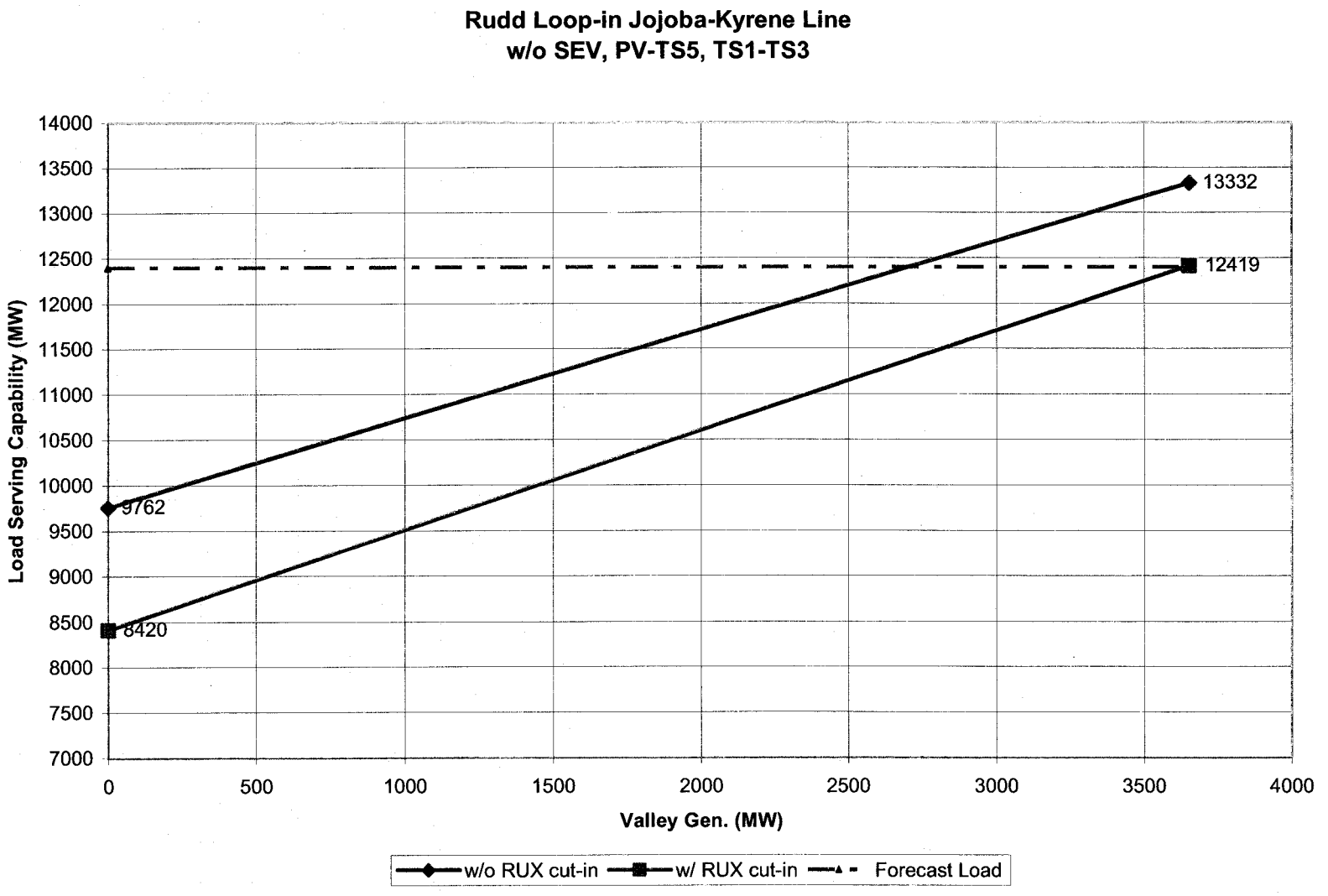
Rudd Loop-in Jojoba-Kyrene Line
w/o SEV, PV-TS5, TS1-TS3
Load Serving Capability (MW)
14000
13500
13000
12500
12000
11500
11000
10500
10000
9500
9000
8500
8000
7500
7000
0
500
1000
1500
2000
2500
3000
3500
4000
Valley Gen. (MW)
13332
12419
9762
8420
w/o RUX cut-in
w/ RUX cut-in
Forecast Load

Reliability Must-Run Analysis

2004–2013

January 30, 2004
APS Transmission Planning

TABLE OF CONTENTS

PAGE

List of Tables 3
List of Figures 4
I. Executive Summary 5
A. Study Overview 6
B. Summary of Results 7
C. Report Conclusions 10
D. Report Organization 12
II. Introduction 13
A. Background of Study Requirement 13
B. Overview of RMR 13
C. Study Methodology 14
D. Determination of SIL and RMR Conditions 15
III. Phoenix Load Pocket 16
A. Description of Phoenix Area 16
B. Phoenix area Critical Outages 22
C. Phoenix Area – SIL for 2005, 2008 and 2012 23
D. Generation Sensitivities 25
IV. Yuma Area 27
A. Description of Yuma Area 27
B. Yuma Area Critical Outages 29
C. Yuma Area - SIL for 2005, 2008 and 2012 29
D. Generation Sensitivities 32
V. Analysis of RMR Conditions 33
A. Phoenix Area 33
1. Annual RMR Conditions 33
2. Maximum Load Serving Capability (MLSC) 35
3. Area Load Forecast 36
4. Generation 37
5. Reserves 40
B. Yuma Area 40
1. Annual RMR Conditions 40
2. Maximum Load Serving Capability (MLSC) 43
3. Area Load Forecast 43
4. Generation 44
5. Reserves 44

VI. Economic Analysis of RMR 45
A. Introduction 45
B. Phoenix 46
1. Phoenix Imports 46
2. Operation of Phoenix area Generating Units 46
3. Cost Impacts 47
4. Emissions Impact 47
C. Yuma 49
1. Yuma Imports 49
2. Operation of Yuma Units 49
3. Cost Impacts 50
4. Emission Impacts 50
VII. Conclusions 51

Appendices

A. Regional Production Cost Modeling Assumptions A1
B. Power Flow Output Results ..... B1 – B24

LIST OF TABLES

Page

ES1. Phoenix area RMR Conditions and Costs 7
ES2. Yuma area RMR Conditions and Costs 8
ES3. Phoenix area Maximum Load Serving Capability 9
ES4. Yuma area Maximum Load Serving Capability 9
ES5. Phoenix area RMR Outside Economic Dispatch 10
ES6. Yuma area RMR Outside Economic Dispatch 10
ES7. Phoenix area Air Emissions Reduction 11
ES8. Yuma area Air Emissions Reduction 12
1. Phoenix area Load Sensitivity 17
2. 2005, 2008, and 2012 Phoenix area Simultaneous Import Limit 23
3. Generation Sensitivities Inside Phoenix 25
4. Generation Sensitivities Outside Phoenix 25
5. Yuma Projects 31
6. Phoenix RMR Conditions Without Phoenix area Generation 33
7. Phoenix area Maximum Load Serving Capability 36
8. Phoenix and Yuma Load and Energy 37
9. Phoenix area Generation 38
10. Yuma RMR Conditions Without Generation 41
11. Yuma area Maximum Load Serving Capability 43
12. Yuma area Generation 44
13. Impact of Eliminating Phoenix Import Limits 46
14. Phoenix Historical Capacity Factor 47
15. Phoenix area Air Emissions Reduction 48
16. Phoenix Power Plant Emissions 48
17. Impact of Eliminating Yuma Import Limits 49
18. Yuma Plants (Historical Generation 50
19. Yuma Power Plant Emissions 50
C1. Phoenix area Air Emissions Reduction 51
C2. Yuma area Air Emissions Reduction 52

LIST OF FIGURES

Page

1. Phoenix area 2005 Load Description 18
2. Phoenix area 2008 Load Description 19
3. Phoenix area 2012 Load Description 20
4. Phoenix area 2005 Load Serving Capability 23
5. Phoenix area 2008 Load Serving Capability 24
6. Phoenix area 2012 Load Serving Capability 24
7. Yuma District Transmission System (2005) 27
8. Yuma District Transmission System (2008) 28
9. Yuma District Transmission System (2012) 29
10. Yuma area 2005 Load Serving Capability 30
11. Yuma area 2008 Load Serving Capability 30
12. Yuma area 2012 Load Serving Capability 31
13. 2005 Phoenix Load Duration & RMR Condition 34
14. 2008 Phoenix Load Duration & RMR Condition 34
15. 2012 Phoenix Load Duration & RMR Condition 35
16. 2005 Yuma Load Duration & RMR Condition 41
17. 2008 Yuma Load Duration & RMR Condition 42
18. 2012 Yuma Load Duration & RMR Condition 42

APS Reliability Must-Run Analysis 2004-2013

I. EXECUTIVE SUMMARY

This report documents the study methodology, results, and conclusions of Arizona Public Service Company's (APS) Reliability Must-Run (RMR) Analysis for the ten years from 2004 to 2013. This analysis was conducted in response to the Arizona Corporation Commission's (ACC) Second Biennial Transmission Assessment (Assessment) and Decision No. 65476 (December 19, 2002). The 2004 RMR Analysis covers a ten-year period and includes detailed analysis of the years 2005, 2008, and 2012.

If a city or load pocket must be served by local generating units at certain peak times, then those units are designated as "reliability must-run" or RMR units. In APS' service territory there are two major areas where load cannot be served totally by power imported over transmission lines – the Phoenix metropolitan area which is served by a combination of APS and SRP facilities, and the APS service territory in the Yuma area.

While ninety-nine percent of the Phoenix area energy requirements can be met by remote generation, local generation is critically important for the reliability of the local power system. The November 2003 U.S.-Canada Power System Outage Task Force Interim Report: Causes of the August 14th Blackout in the United States and Canada pointed out the importance of the reactive capability of voltage support from local generation. Local generation can provide critical support for transmission contingencies and other power system disturbances and can prevent customer outages including blackout conditions such as those experienced in the Northeast on August 14, 2003.

Comments during the workshop for the 2003 RMR analysis held in February 2003 indicated that electric power system industry participants desired to have a more participative role in the 2004 RMR analysis. To facilitate this participation, APS and the other Arizona transmission providers utilized the Central Arizona Transmission Study forum to publicly determine the 2004 RMR study plan, had extensive discussion on study models and preliminary results, and ultimately conducted a workshop on January 15, 2004 to present the study results for comment. This process led to the decision to study the Phoenix area as a combined APS and Salt River Project (SRP) network, the determination of the specific years to study; 2005, 2008, and 2012, and the specific loads to include in the Phoenix area for the three study years.

The year 2005 was selected to provide a benchmark for the 2003 RMR study. The years 2008 and 2012 were selected as representative years during the ten-year window and because databases for these years were being used to perform studies in other study forums such as the Southwest Transmission Expansion Plan (STEP) planning group and the Seams Steering Group-Western Interconnection (SSG-WI).

This study found that the results for the 2005 study were similar to those from last year's study for 2005. The results for 2008 indicate lower RMR requirements than for 2005. In 2012, the RMR requirements are similar to those for 2005. However, in 2012 available Phoenix area

generation reserves are presently projected to be less than the reserve requirements. Although the reserve margin deficiency is not itself related to RMR, it is a load-serving issue that should be addressed. To mitigate the 2012 deficiency in Phoenix area reserves, APS and SRP are presently evaluating both transmission alternatives to increase import capability and alternatives to increase Phoenix area generation.

The cost of using must-run units can be measured by the difference between generation costs with the transmission limit and costs without the limit. This report looks at and compares the cost of serving these two areas with and without the existing transmission constraints.

This report concludes that for the Phoenix metropolitan area, the cost of RMR with the transmission limit is less than $100,000 annually and does not at present outweigh the cost of transmission improvements beyond those already included in the APS and SRP ten-year plans. Costs to relieve import limitations were documented in the 2003 RMR study to be in excess of $16 million. For Yuma, the report shows that the new North Gila 500/69-kV transformer and the new 230-kV line from Gila Bend-to-Yuma included in the present APS ten-year plan is sufficient to cost-effectively address RMR conditions. Environmental effects for both areas with and without transmission constraints are also documented in this report. Because there is such a small RMR requirement for both areas in all three years studied, the environmental effects of RMR are minimal.

A. Study Overview

The existence of transmission import limited areas is not uncommon in the United States, and particularly in the West where load centers are generally separated by long distances. APS has transmission import-limited areas in Phoenix and Yuma. An import area is transmission limited when all load cannot be served solely by importing resources over local transmission lines, thus requiring some use of local generating units to reliably meet peak load.

The two transmission import-limited areas in APS' system were studied to determine:

- The system simultaneous import limit (SIL), which is the maximum amount of capacity that can be reliably imported into an area with no local generation;
- The maximum load serving capability (MLSC), which is the total load that can be reliably served from imports and from local generation;
- Annual RMR conditions, including magnitude of load in excess of the SIL and number of hours the load exceeds the SIL; and
- Estimated economic and environmental impacts of the import limits.

The Phoenix area is a tight network of APS and SRP load, resources, and transmission facilities. Because the Phoenix system is highly integrated, the import limits must be determined for the combined area. This analysis was coordinated with SRP personnel, who had significant involvement in the study and were helpful in the overall analysis. The Western Area Power Administration (WAPA) coordinated with APS and SRP in the study because their transmission facilities interface with the Phoenix network.

After the combined import limit (SIL) for the Phoenix area was determined, RMR conditions were evaluated for the Phoenix area based on the Phoenix area import limits, the Phoenix area load, and Phoenix area local generation, which includes generation owned by APS, SRP and Pinnacle West Energy Corporation (PWEC).

The Yuma area, which has a forecast 2005 summer peak demand of approximately 344 MW, is served by an internal APS 69-kV sub-transmission network containing all of the load in the import-limited area. There are external ties to WAPA and the Imperial Irrigation District (IID), as well as a bulk power interface with the Hassayampa-to-North Gila transmission system. This analysis was coordinated with the WAPA Phoenix office to ensure accurate modeling.

B. Summary of Results

Results of the analysis for the three years of the study, 2005, 2008, and 2012, assume that present plans for system improvements in place when the study was conducted are completed on schedule.

The following table summarizes the estimated RMR conditions and costs for the Phoenix area.

Table ES1
Phoenix area RMR Conditions and Costs

Year	SIL[1] (MW)	Peak Demand (MW)	Max RMR[2] (MW)	RMR[3] Hours	RMR Energy[4] (GWH)	RMR Energy (% of total)	RMR Cost[5] ($K)
2005	8,617	11,141	2,524	678	550	1.2	0.0
2008	10,511	12,425	1,914	338	222	0.4	0.0
2012	11,103	14,406	3,303	758	805	1.3	84.0

Table Key:

[1]**SIL** – System Simultaneous Import Limit is the maximum amount of capacity that can be reliably imported into the area with no local generation operating.

[2]**Max RMR** – The amount of local generation required to meet the area peak demand (Peak Demand minus SIL).

[3]**RMR Hours** – The number of hours that the area's demand exceeds the SIL, thus requiring the use of local generation to meet load, even if otherwise economically dispatched.

[4]**RMR Energy** – The annual energy required to be met by local generation (in excess of the SIL).

[5]**RMR Cost** – The difference in annual generation cost with and without the transmission limitation.

The following table summarizes the estimated RMR conditions and costs for the Yuma area.

Table ES2
Yuma Area RMR Conditions and Costs

Year	SIL[1] (MW)	Peak Demand (MW)	Max RMR[2] (MW)	RMR[3] Hours	RMR Energy[4] (GWH)	RMR Energy (% of total)	RMR Cost[5] ($K)
2005	265	344	79	714	20	1.3	500.0
2008	292	380	88	676	21	1.2	0.0
2012	410	425	15	12	0	0.0	0.0

Table Key:

[1]**SIL** – System Simultaneous Import Limit is the maximum amount of capacity that can be reliably imported into the area with no local generation operating.

[2]**Max RMR** – The amount of local generation required to meet the area peak demand (Peak Demand minus SIL).

[3]**RMR Hours** – The number of hours that the area's demand exceeds the SIL, thus requiring the use of local generation to meet load, even if otherwise economically dispatched.

[4]**RMR Energy** – The annual energy required to be met by local generation (in excess of the SIL).

[5]**RMR Cost** – The difference in annual generation cost with and without the transmission limitation.

The following table shows the Phoenix area Maximum Load-Serving Capability (MLSC) for the three years studied and compares the MLSC to the forecasted peak demand. This includes the new generation of Santan 5 in the 2005 study and Santan 6 in the 2008 study. The MLSC is determined by adding the SIL and the local generation minus the local reserve requirement. APS determined the Phoenix area reserve requirements by performing a probabilistic analysis that considered the size and forced outage rates of the local generating units and resulted in 99 percent reliability of serving all load. This analysis resulted in reserve requirements of 809 MW, 865 MW, and 865 MW for the Phoenix area for the years 2005, 2008, and 2012 respectively.

Table ES3
Phoenix Area Maximum Load Serving Capability

Year	SIL	Local Generation	Required Reserves	MLSC (SIL+LG-RR)	Peak Demand (MW)	Projected Reserves
2005	8,617	3,374	809	11,182	11,141	850
2008	10,511	3,649	865	13,295	12,425	1735
2012	11,103	3,649	865	13,887	14,406	346

The following table summarizes the Yuma area MLSC. The reserve requirements for the Yuma area were determined to be 138 MW for all years studied.

Table ES4
Yuma Area Maximum Load Serving Capability

Year	SIL	Local Generation	Required Reserves	MLSC (SIL+LG-RR)	Peak Demand (MW)	Projected Reserves
2005	265	267	138	394	344	188
2008	292	267	138	421	380	179
2012	410	267	138	539	425	252

Local generating units are dispatched based on cost. Thus, most of the RMR hours shown above are dispatched in merit order. However, the presence of a transmission constraint may require local generation to be dispatched out of merit order or "out of the money." This report considered all Phoenix area and Yuma area transmission limitations and generation resources in determining the overall RMR situation. The economic impact of RMR can be seen from the following tables.

The following table summarizes the estimated total number of hours that local Phoenix generation must run out of economic dispatch, the amount of energy that is produced out of economic dispatch and the associated cost.

Table ES5

Phoenix area RMR Outside Economic Dispatch

Year	Hours outside economic dispatch	Energy outside economic dispatch (GWH)	RMR Cost ($K)
2005	18	6	0
2008	0	0	0
2012	14	1	84

The following table summarizes the estimated total number of hours that APS local Yuma generation must run out of economic dispatch, the amount of energy that is produced out of economic dispatch and the associated cost.

Table ES6
APS Yuma Area RMR Outside Economic Dispatch

Year	Hours outside economic dispatch	Energy outside economic dispatch (GWH)	RMR Cost ($K)
2005	336	8	500
2008	2	0	0
2012	0	0	0

C. Report Conclusions

Phoenix area Conclusions

1. All Phoenix area transmission and local generation are necessary to reliably serve Phoenix area peak load in 2005 with the local generation reserve margin just exceeding the required reserve margin. In 2008, the local generation reserve margin significantly exceeds the required reserve margin. However, in 2012 the reserve margin is 346 MW which is 519 MW less than the required reserve margin of 865 MW. To mitigate this reserve deficiency APS and SRP are presently evaluating both transmission alternatives to increase import capability and alternatives to increase Phoenix area generation.

2. During the summer, Phoenix area load is expected to exceed the available transmission import capability for approximately 680 hours in 2005, 340 hours in 2008, and 760 hours in 2012. These hours represent only approximately one percent of the annual energy requirements for the Phoenix area.

3. From a total Phoenix load, transmission, and resources viewpoint, import limits are expected to cause a minimal amount of local generation to be dispatched out of economic dispatch order in 2005 and 2012, and no impact in 2008.

4. The estimated annual economic cost of Phoenix area RMR generation is negligible, therefore advancement of transmission projects to increase import capability are presently not cost justified.

5. Removing the transmission constraint could reduce total Phoenix area air emissions by the following annual amount for 2005. There is a minimal impact for years 2008 and 2012 due to the increased import capabilities and resources resulting in fewer hours of operating local generation.

Table ES7
Phoenix area Air Emissions Reduction

Pollutant	Reduction[1] (tons/year)	Reduction of Phoenix Area Emissions (% of total emissions from all sources)
VOC	0.0	0.000
NO_x	4.0	0.007
CO	1.0	0.000
PM_{10}	0.0	0.000

[1]2005 results, impact for 2008 and 2012 are lower

6. Removing the import restriction into the Phoenix area has no impact on local generation capacity factor. The capacity factor ranges from approximately 11% in 2005 to 26% in 2012.

Yuma Area Conclusions

7. All existing Yuma area transmission and generation resources are necessary to reliably serve the Yuma area load.

8. The Yuma area load is expected to exceed the available transmission import capability for 714 hours in 2005, 676 hours in 2008 and 12 hours in 2012 although the amount of total load in the Yuma area is approximately 350-425 MW.

9. From a total Yuma load, transmission, and resources viewpoint, the import constraint could cause APS Yuma generation to be dispatched out of economic dispatch order for 336 hours in 2005, 2 hours in 2008, and 0 hours in 2012.

10. The estimated annual economic cost of Yuma area generation required to run out of economic dispatch order is relatively small, therefore advancement of transmission projects to increase import capability are presently not cost justified.

11. Removing the transmission constraint could reduce total Yuma area air emissions by the following annual amount for 2005. There is a minimal impact for years 2008 and 2012 due to the increased import capabilities resulting in fewer hours of operating local generation.

Table ES8
Yuma Area Air Emissions Reduction

Pollutant	Reduction[1] (tons/year)	Reduction of Yuma Area Emissions (% of total emissions from all sources)
VOC	1.0	Unavailable
NO_x	20	Unavailable
CO	5	Unavailable
PM_{10}	1.0	0.001

[1]2005 results, impact for 2008 and 2012 are lower

12. Removing the import restriction into the Yuma area could reduce the APS Yuma generation capacity factor from 1.6 percent to 1.2 percent in 2005.

D. Report Organization

This report is organized in eight sections. Section I provides an executive summary of the report. Section II provides general background information of the study requirements, an overview of RMR, and describes the study methodology. Section III describes the Phoenix area, the nature of the import limit, the resulting import limits for 2005, 2008, and 2012, and the impact of various generators in and around the Phoenix area on the import limit. Section IV provides a similar discussion of the Yuma area. Section V describes the RMR conditions such as number of hours, maximum capacity, and annual energy for the Phoenix and Yuma areas. Section VI provides results of the economic analysis of the Phoenix and Yuma area RMR conditions performed utilizing a regional planning model (GE MAPS) and emissions impact. Finally, Section VII lists the conclusions of the analysis.

II. INTRODUCTION

A. Background of Study Requirement

Like all large electric utilities, Arizona utilities have historically relied on both transmission, to deliver remote generation into its load centers, as well as local generation to reliably serve its customers. Due in part to environmental, economic, and fuel availability considerations, large base-load thermal generators have typically been located away from the load centers while smaller but less efficient intermediate and peaking units — with lower capacity factors — were located within the load centers. Although this local generation is relied on for a relatively small amount of energy, this local generation is critically important for the reliability of the local power system. The November 2003 U.S.-Canada Power System Outage Task Force Interim Report: Causes of the August 14th Blackout in the United States and Canada pointed out the importance of the reactive capability of voltage support from local generation. Local generation can provide critical support for transmission contingencies and other power system disturbances and can prevent customer outages including blackout conditions such as those experienced in the Northeast on August 14, 2003. Local generation also results in lower power system losses and lower capital expenses for transmission infrastructure.

In the past, vertically-integrated utilities, such as APS, managed the siting and construction of both generation and transmission resources needed to serve their customers. Electric systems were designed based on a detailed integrated resource planning process used to evaluate the appropriate balance of generation, transmission, and demand-side resources. Interconnections with neighboring systems were primarily intended to improve system reliability and lower the costs of reserves by allowing for sharing of capacity reserves by multiple systems. Each utility's system was primarily designed to accommodate that utility's resources and that utility's load.

The Commission's Second Biennial Transmission Assessment requires "any [Utility Distribution Company] that currently relies on local generation, or foresees a future time period when utilization of local generation may be required to assure reliable service for a local area, [to] perform and report the findings of an RMR study as a feature of their ten year plan filing with the Commission in January 2003 and 2004." The Assessment required that the RMR study filed in January 2003 evaluate RMR conditions through the 2005 summer peak. The January 2004 RMR study covers the 10-year period from 2004 to 2013.

B. Overview of RMR

Local "load pockets" are areas that do not have enough transmission import capability to serve all load in the area solely by importing remote generation over local transmission facilities. For these areas, during peak hours of the year, local generation is required to serve that portion of the load that cannot reliably be served by transmission imports. This local generation requirement is often referred to as Reliability Must-Run or RMR generation. In these areas, during peak conditions, load is served by a combination of importing remote generation over transmission lines and operating local generation.

The maximum load that can be served in a load pocket with no local generation operating — in other words, the maximum load that can be served solely by importing remote generation — is referred to as the system Simultaneous Import Limit (SIL). The SIL is established through technical studies by ensuring that:

- With the local load at the SIL and no local generation operating there are no transmission system normal operating (N-0) limit violations of thermal loading or voltages, and
- Under all single contingency outage events (N-1) there are no emergency operating limit violations of thermal loading or voltages, and no system instability.

C. Study Methodology

Import limit analysis was performed for the Phoenix and Yuma areas. See Appendix A for power flow results. The import limit area or load pocket is defined as that load which, when increased, would increase the severity of the limiting contingency. For example, load in Flagstaff has no impact on the severity of the limiting contingency for the Phoenix import limited area, and therefore Flagstaff is not included in the Phoenix load pocket. In contrast, downtown Phoenix load does impact the severity of the limiting contingency and therefore is included in the load pocket. All area contingencies known to result in system stress were evaluated to determine the critical contingency for the area. Import limits were determined by contingency conditions of thermal loading at the emergency rating of a facility, steady state voltages at the emergency voltage limit, and system instability including voltage instability.

Import limits were determined for the Phoenix and Yuma areas with no local generation operating, with maximum local generation operating, and sufficient points in between to determine curves which define import limits at all load levels. This methodology was applied to studies of the Phoenix area, which for 2005 and 2008 is constrained by both voltage instability and thermal loadings, depending on the local load level. In 2012 the Phoenix area is constrained solely by thermal loadings. For the Yuma studies, the limitations are primarily post-disturbance thermal constraints and voltage drop limits. Generator sensitivities were performed to determine the relative impact of various generators on the import limits for the Phoenix and Yuma areas.

From each year's forecasted peak load and historical daily load cycles, the annual RMR conditions were determined including magnitude of local load, both demand and energy, expected to exceed the SIL and the annual hours for which local load is expected to exceed the SIL.

An economic analysis was performed in each area for each year using the GE MAPS production-costing model to determine the cost of the import limits. GE MAPS is a regional generation and transmission simulation model and is discussed in more detail in Appendix B to this report.

Additional transmission alternatives to mitigate the import limits of the Phoenix and Yuma area were not studied due to the minimal amounts of RMR conditions that were identified in the study. The cost for any transmission alternative would significantly exceed the costs associated with any RMR conditions. This report concludes that for the Phoenix metropolitan area, the cost

of RMR with the transmission limit is less than $100,000 annually and costs to relieve import limitations were documented in the 2003 RMR study to be in excess of $16 million.

D. Determination of SIL and RMR Conditions

In this analysis, assessments of the SIL and RMR conditions for the Phoenix area and the Yuma area were performed for the years 2005, 2008, and 2012. The year 2005 was selected to provide a benchmark for the 2003 RMR study. The years 2008 and 2012 were selected as representative years during the ten-year window and because databases for these years were being used to perform studies in other study forums such as the Southwest Transmission Expansion Plan (STEP) planning group and the Seams Steering Group-Western Interconnection (SSG-WI). Base case and contingency power flow, stability, and voltage stability analyses were performed to determine import limitations. The initial starting cases were based on WECC heavy summer full loop base cases in GE Power Flow format for the corresponding year. Those base cases model the entire Western Interconnection's transmission system and were reviewed and then updated to represent expected loads and system configuration for 2005, 2008 and 2012. All cases were coordinated between APS, SRP, Tucson Electric Power Company (TEP), Southwest Transmission Cooperative (SWTC), and WAPA to capture the most accurate expected operating conditions for the Arizona transmission system. Also, the 2012 case is consistent with the 2012 case used in the CATS Phase III study.

III. PHOENIX LOAD POCKET

A. Description of Phoenix Area

During summer 2005, the Phoenix area — which consists of both APS' and SRP's integrated network — will be served from the following major Extra High Voltage (EHV) substations: Westwing, Pinnacle Peak, Kyrene, Rudd, Browning, and Silverking. These EHV stations form the "cornerstones" of an extensive internal network of 230-kV transmission lines that constitute the high voltage energy delivery system within the Phoenix load area. By summer 2008, two new EHV substations will be added to the existing major EHV substations serving the Phoenix area. They are the TS5 substation and the South East Valley (SEV) substation. And, in 2012 the Raceway substation is added.

Since the summer of 2002, APS has served some northwest Phoenix area load from the Raceway substation, which has been built as an interconnection to the WAPA Westwing-to-Waddell 230-kV line. Because this line has no interconnections with other Phoenix area 230-kV lines, this load does not significantly impact the contingency response of the Phoenix area and is therefore not included in the Phoenix area load determination, until the 2012 case when Raceway becomes interconnected to Pinnacle Peak and the new 500-kV substation.

Because the City of Mesa load is served by dedicated resources external to Phoenix, the economic RMR analysis is performed with this load excluded.

Energy flows into the EHV delivery points from the EHV transmission lines and then is stepped down to 230-kV and transmitted into the load center via the 230-kV transmission lines. These loads, with area losses, are measured by determining the flows from the EHV substations into the load area to include all of these load stations. The specific loads to be included in the Phoenix area load for each of the three years was determined by sensitivity analysis performed early in the study effort to determine the impact of various loads on the severity of the critical contingency. Table 1 shows the results of the sensitivity analysis which was performed on a preliminary 2008 case.

Table 1
Phoenix Area Load Sensitivity

	Palo Verde-Rudd Outage Westwing-Surprise 230kV line	
	Overload	% INCREASE
Base Case	**100.0%**	**xxx**
Surprise	107.2%	7.2%
White Tanks	102.6%	2.6%
West Phoenix	102.1%	2.1%
Country Club	101.8%	1.8%
Ocotillo	101.4%	1.4%
TS3	101.3%	1.3%
Buckeye	101.0%	1.0%
Kyrene	101.0%	1.0%
Thunderstone	101.0%	1.0%
Santan	101.0%	1.0%
TS1	101.0%	1.0%
Mooshine (EMA)	101.0%	1.0%
Pinnacle Peak	100.9%	0.9%
Gavilan Peak	100.8%	0.8%
Browning	100.7%	0.7%
Jojoba	100.7%	0.7%
Moonshine	100.7%	0.7%
Case Grande	100.4%	0.4%
Gila Bend	100.4%	0.4%
Yavapai	100.1%	0.1%
Avery	99.8%	-0.2%
Raceway	99.6%	-0.4%

	Jojoba-Kyrene Outage Kyrene 230kV Voltage	
	ΔV	% INCREASE
Base Case	**4.72**	**XXX**
Browning	5.83	1.11
Santan	5.43	0.71
Kyrene	5.35	0.63
Thunderstone	5.35	0.63
Ocotillo	5.20	0.5
Country Club	5.15	0.43
Pinnacle Peak	5.10	0.38
Moonshine (EMA)	5.08	0.36
Gavilan Peak	5.08	0.36
West Phoenix	5.04	0.32
White Tanks	4.99	0.27
Buckeye	4.93	0.21
Surprise	4.93	0.21
Raceway	4.90	0.18
Yavapai	4.82	0.1
Casa Grande	4.75	0.03

The sensitivity analysis confirmed that all of the Phoenix area load included in last year's study was appropriate, but that load at Buckeye, Gila Bend, the Eastern Mining Area, and Gavilan Peak should also be included. Figure 1 shows all of these loads included for the 2005 study. Figure 2 shows, in 2008, the Phoenix area load is expanded to include loads supplied by the new bulk power substations TS5 and South East Valley (SEV). Figure 3 shows, in 2012, the Phoenix area load is expanded to include loads supplied from the bulk substation at Raceway.

Figure 1

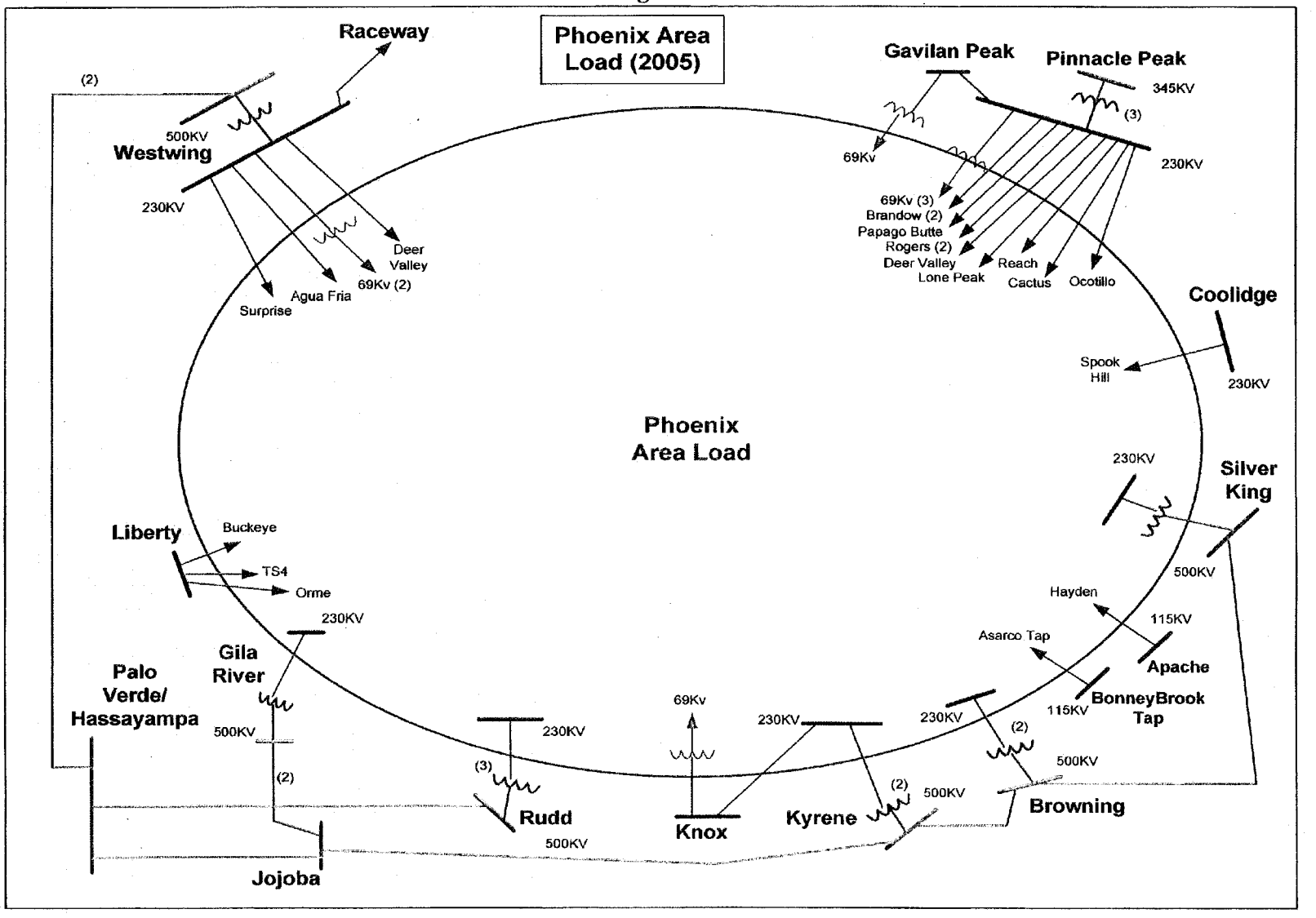
Phoenix Area Load (2005)
Raceway
(2)
500KV
Westwing
230KV
Deer Valley
69Kv (2)
Agua Fria
Surprise
Gavilan Peak
Pinnacle Peak
345KV
(3)
69Kv
230KV
69Kv (3)
Brandow (2)
Papago Butte
Rogers (2)
Deer Valley
Lone Peak
Reach
Cactus
Ocotillo
Coolidge
Spook Hill
230KV
Phoenix Area Load
230KV
Silver King
500KV
Liberty
Buckeye
TS4
Orme
230KV
Hayden
115KV
Asarco Tap
Apache
Gila River
Palo Verde/ Hassayampa
500KV
(2)
69Kv
230KV
230KV
230KV
115KV
BonneyBrook Tap
(2)
500KV
(3)
Rudd
500KV
Knox
Kyrene
(2)
500KV
Browning
Jojoba

Figure 2

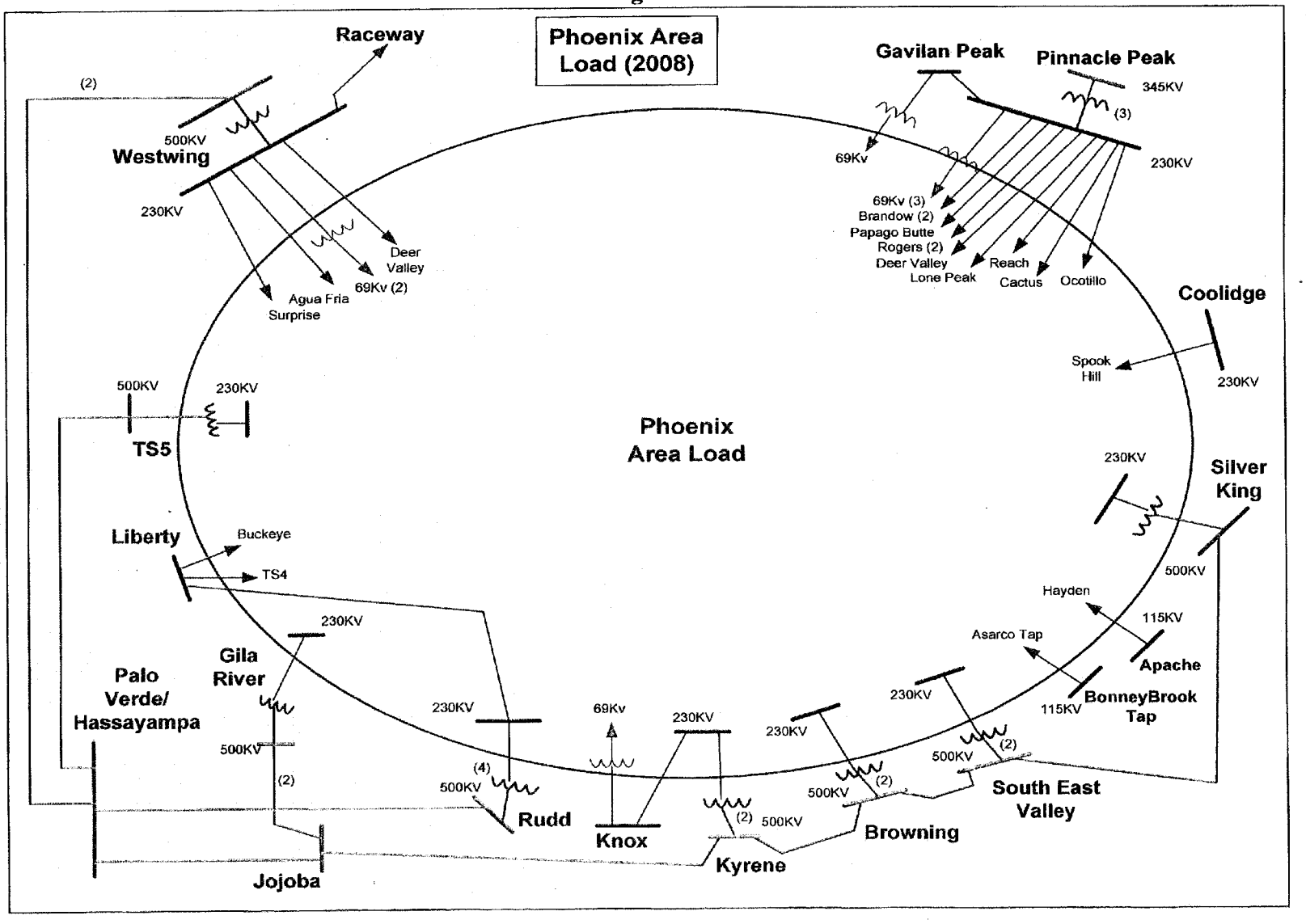
Phoenix Area Load (2008)
Raceway
(2)
500KV
Westwing
230KV
Deer Valley
69Kv (2)
Agua Fria
Surprise
Gavilan Peak
Pinnacle Peak
345KV
(3)
69Kv
230KV
69Kv (3)
Brandow (2)
Papago Butte
Rogers (2)
Deer Valley
Lone Peak
Reach
Cactus
Ocotillo
Coolidge
Spook Hill
230KV
500KV
230KV
TS5
Phoenix Area Load
230KV
Silver King
500KV
Liberty
Buckeye
TS4
Hayden
115KV
Asarco Tap
Apache
BonneyBrook Tap
115KV
230KV
Gila River
Palo Verde/ Hassayampa
500KV
(2)
230KV
69Kv
230KV
230KV
230KV
500KV
(2)
(4)
500KV
Rudd
Knox
(2)
500KV
Kyrene
500KV
(2)
Browning
South East Valley
Jojoba

Figure 3

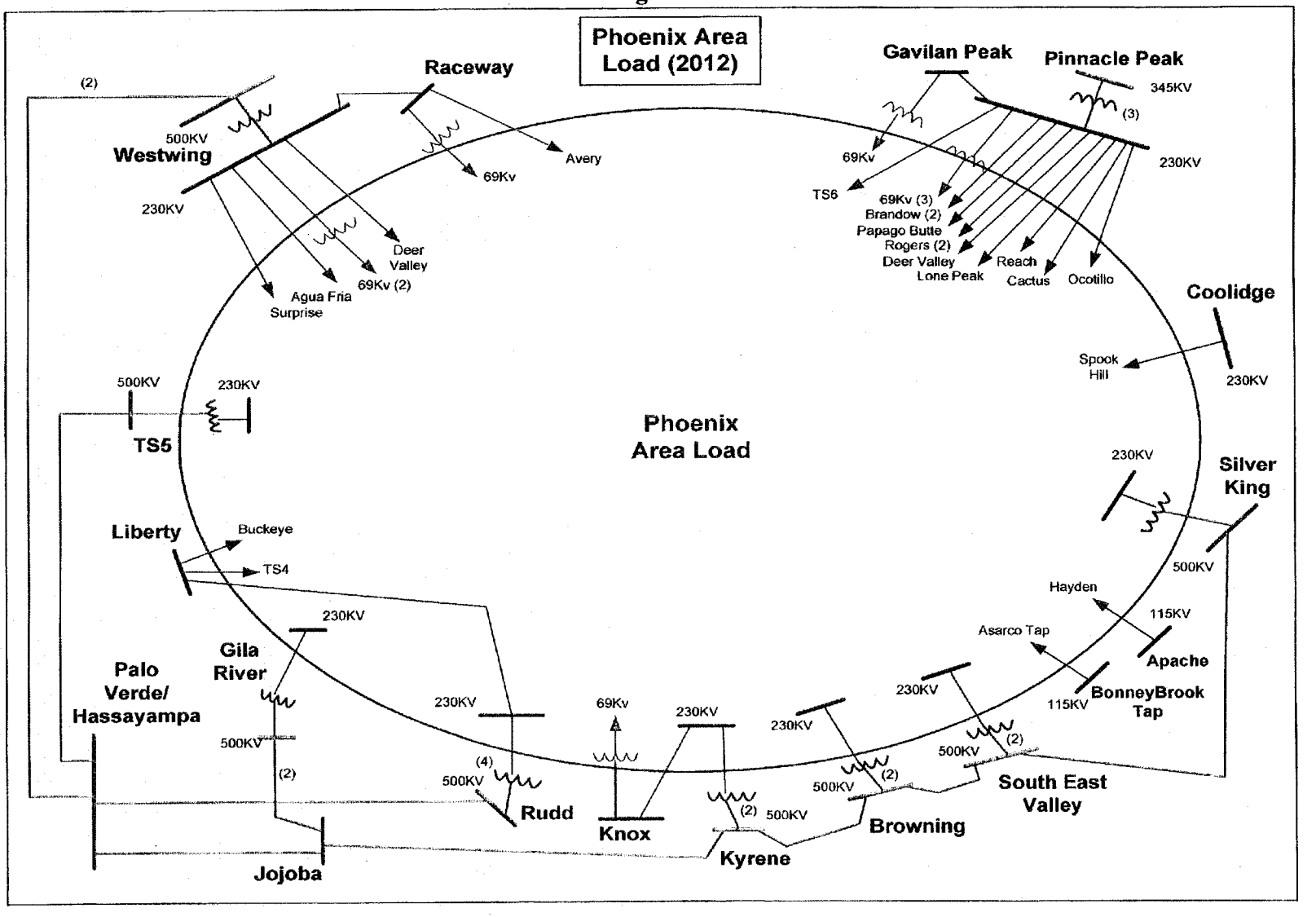
Phoenix Area Load (2012)
Phoenix Area Load
Raceway
Avery
69Kv
Westwing
500KV
230KV
(2)
Deer Valley
69Kv (2)
Agua Fria
Surprise
Gavilan Peak
Pinnacle Peak
345KV
(3)
230KV
69Kv
TS6
69Kv (3)
Brandow (2)
Papago Butte
Rogers (2)
Deer Valley
Lone Peak
Reach
Cactus
Ocotillo
Coolidge
Spook Hill
230KV
Silver King
230KV
500KV
Hayden
115KV
Apache
Asarco Tap
BonneyBrook Tap
115KV
230KV
South East Valley
500KV
(2)
230KV
Browning
500KV
(2)
230KV
Kyrene
(2)
500KV
230KV
Knox
69Kv
230KV
Rudd
500KV
(4)
230KV
Gila River
500KV
(2)
Palo Verde/ Hassayampa
Jojoba
Liberty
Buckeye
TS4
TS5
500KV
230KV

In performing the Phoenix area studies several planned projects were added to reflect transmission system upgrades for the next ten years. They are listed below under one of the three study years they will first appear:

Projects in service by 2005

- Gavilan Peak substation connected to Pinnacle Peak-Prescott 230-kV line
- Reach 2nd 230/69-kV transformer addition
- Browning 230/69-kV, 280 MVA transformer addition
- Cactus 3rd 230/69-kV transformer addition
- North Gila 2nd 500/69-kV transformer addition
- Surprise 2nd 230/69-kV transformer addition
- West Phoenix 3rd 230/69-kV transformer addition
- Thunderstone 2 new 230/69-kV, 280 MVA transformer additions
- Alexander 69-kV 46mvar capacitors addition
- Santan CC5 550 MW generation addition

Projects in service by 2008

- Silver King substation connected to Cholla-Saguaro 500-kV line
- South East Valley project
- A new Avery 230/69-kV substation with a 230/69-kV transformer and a 230-kV line from Raceway substation
- A new TS5 500/230-kV substation with two 500/230-kV transformers, a 500-kV line to Palo Verde area
- A new TS1 230/69-kV substation with a 230/69-kV transformer, a 230-kV line to TS5 substation
- A new TS3 230/69-kV substation with a 230/69-kV transformer, a 230-kV line to TS1 substation, and connected to Rudd-TS4 230-kV line
- Lincoln Street 2nd 230/69-kV transformer addition
- Rudd 4th 500/230-kV transformer addition
- A new Jojoba 230/69-kV substation with a 230/69-kV transformer and connected to Gila River-Liberty 230-kV line
- Santan CC6 275 MW generation addition

Projects in service by 2012

- A new Raceway 500-kV substation connected to Navajo-Westwing 500-kV line and a 500-kV line to TS5 substation
- A new TS2 230-kV substation with a 230/69-kV transformer and connected to TS1-TS3 230-kV line
- A new TS6 230/69-kV substation with a 230/69-kV transformer and connected to a new Avery-Pinnacle Peak 230-kV line
- Meadowbrook 2nd 230/69-kV transformer addition
- Alexander 2nd 230/69-kV transformer addition

B. Phoenix Area Critical Outages

1. 2005

The analysis determined that the critical single contingency for the Phoenix load area with less than 1400 MW of local Phoenix area generation is the loss of the Jojoba-to-Kyrene 500-kV transmission line. The loss of this major 500-kV line to the Phoenix area results in significantly higher flows on the remaining transmission lines and causes a large increase in reactive power (Var) losses in the transmission network. The increase in Var consumption results in insufficient Vars for voltage support in the load area. Consequently, this condition creates low voltages in the system and makes the area deficient in reactive power. The system is constrained by voltage instability, with local Phoenix area generation below 1400 MW. With local Phoenix area generation above 1400 MW, the critical single contingency for the Phoenix load area is also the loss of the Jojoba-to-Kyrene 500-kV transmission line. But, with at least 1400 MW of local generation on-line, the loss of the line results in a thermal overload of the Rudd-to-Orme 230-kV transmission line. Thus, the system is constrained by this thermal overload when local Phoenix area generation is above 1400 MW.

2. 2008

The analysis determined that the critical single contingency for the Phoenix load area with less than 1600 MW of local Phoenix area generation is the loss of the Jojoba-to-Kyrene 500-kV transmission line. The loss of this major 500-kV line to the Phoenix area results in significantly higher flows on the remaining transmission lines and causes a large increase in reactive power (Var) losses in the transmission network. The increase in Var consumption results in insufficient Vars for voltage support in the load area. Consequently, this condition creates low voltages in the system and makes the area deficient in reactive power. The system is constrained by voltage instability, with local Phoenix area generation below 1600 MW. With local Phoenix area generation above 1600 MW, the critical single contingency for the Phoenix load area is the loss of the Agua Fria-to-Glendale 230-kV transmission line. With at least 1600 MW of local generation on-line, the loss of the Agua Fria-to-Glendale 230-kV transmission line results in a thermal overload of the West Phoenix-to-Lincoln Street 230-kV transmission line. Thus, the system is constrained by this thermal overload when local Phoenix area generation is above 1600 MW.

3. 2012

The analysis determined that the critical single contingency for the Phoenix load area at all load and generation levels is the loss of the Palo Verde-to-Rudd 500-kV transmission line. The loss of this major 500-kV line results in significantly higher flows on the underlying 230-kV transmission system and causes a thermal overload on the Westwing-to-Surprise 230-kV transmission line. Thus, the system is constrained by this thermal overload for the loss of the Palo Verde-to-Rudd 500-kV transmission line.

The voltage stability analysis was performed using Q-V analysis on the most reactive deficient buses in the Phoenix area. These buses were the Kyrene 500-kV, Kyrene 230-kV, Browning 230-kV, Westwing 230-kV, and the Pinnacle Peak 230-kV buses.

Q-V analysis is performed by adding reactive load at the critical bus until the voltage reaches a minimum value which indicates potential voltage instability. The import limit is determined as the lesser of 95% of the import with zero reactive margin or 100% of the import with a 5% voltage drop following the worst single-contingency per WECC planning criteria.

C. Phoenix Area – SIL for 2005, 2008, and 2012

Analysis of the Phoenix area transmission network resulted in area import limits based on the limits discussed above. Operation of the Phoenix system within these limits ensures that the area does not experience voltage instability or thermal overloading of a system element after a critical contingency. Voltage instability is characterized by a progressive fall in voltage magnitude at a particular location of the power system that may spread throughout the network causing a complete area voltage collapse and blackout. A thermal overload occurs when more power flows through an element than the emergency rating of that element. The Phoenix area SIL for the years 2005, 2008, and 2012 are outlined in Table 2.

Table 2
2005, 2008, and 2012 Phoenix area Simultaneous Import Limit

Year	SIL (MW)
2005	8,617
2008	10,511
2012	11,103

The maximum Phoenix area load-serving capability for various generation levels is shown in Figures 4, 5, and 6.

Figure 4

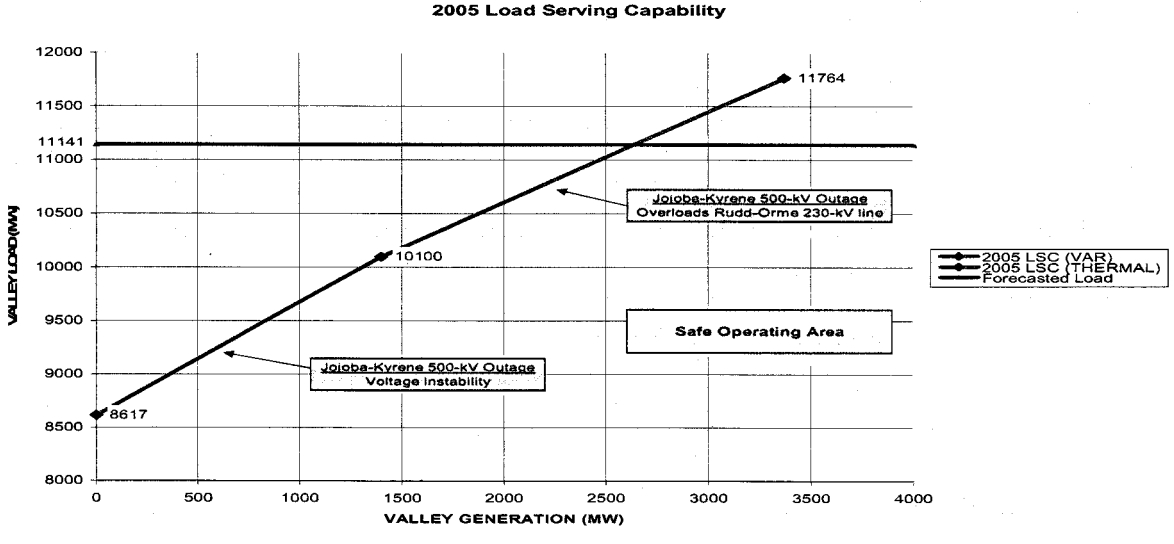

Figure 5

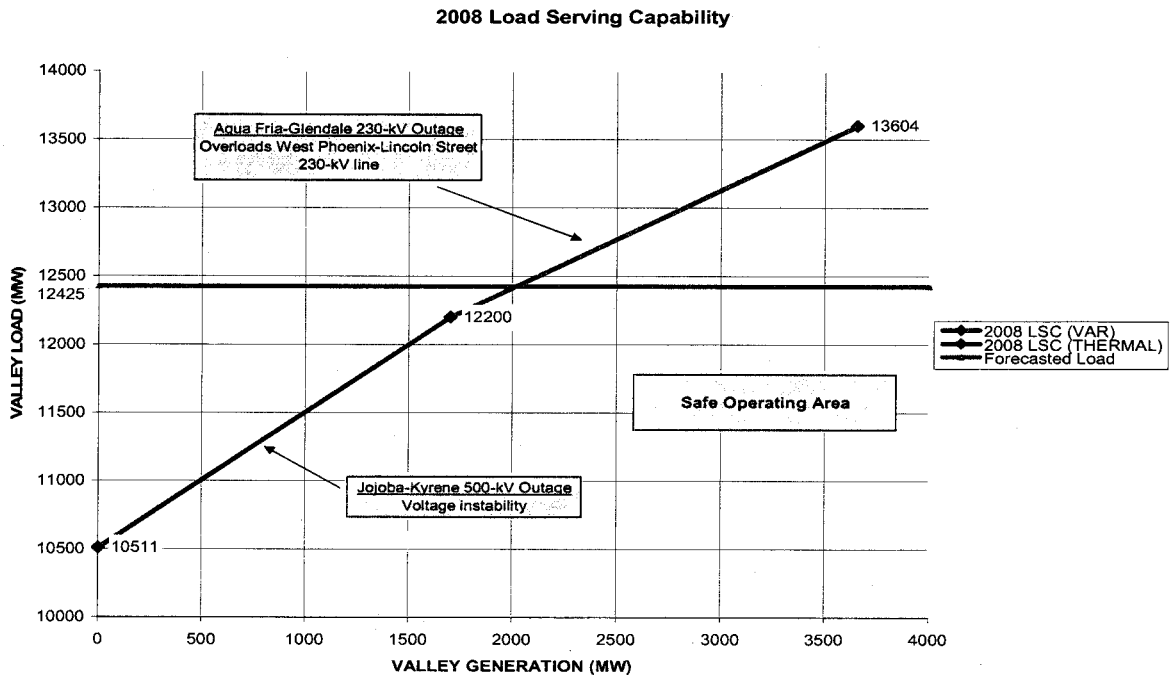

Figure 6

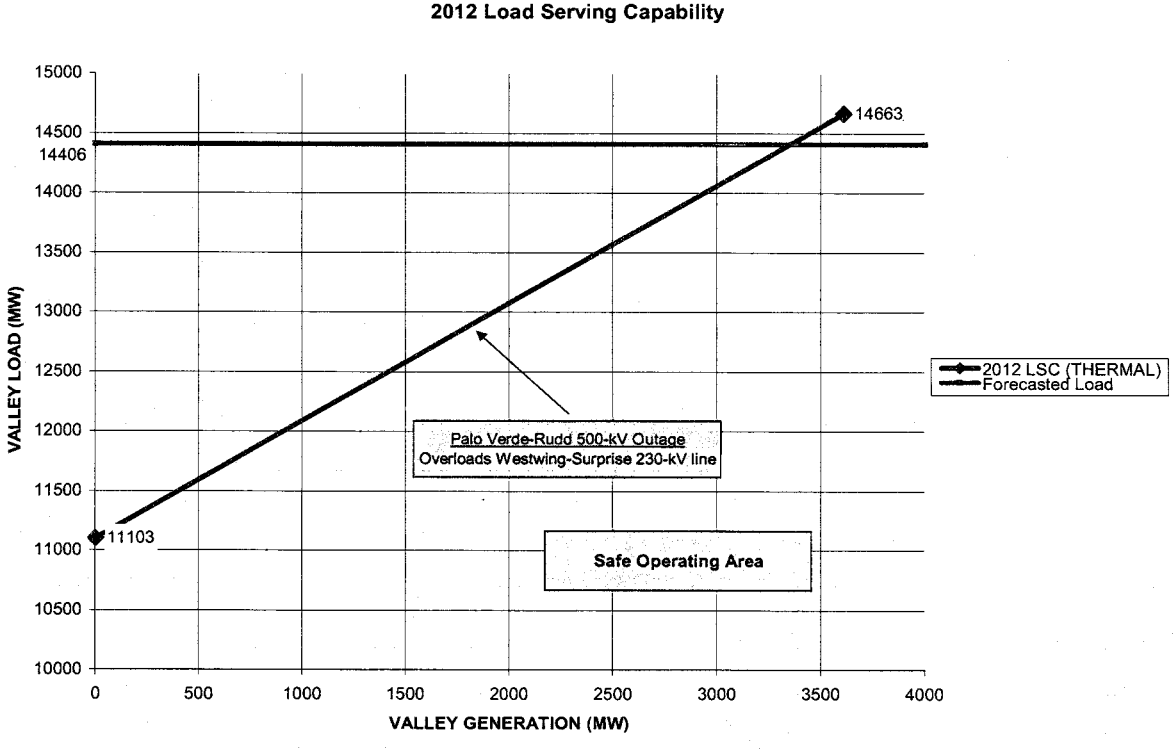

D. Generation Sensitivities

Sensitivity analyses of generation impact on load-serving capability were also conducted. These sensitivities were done with the maximum level of local generation. The following tables provide the results of these analyses for units that are both within and outside the Phoenix area.

Generation sensitivities inside the Phoenix area are listed in Table 3.

Table 3
Generation Sensitivities Inside Phoenix

Generation Source Increase by 100 MW	2005 Load Serving Capability Increase (MW)	2008 Load Serving Capability Increase (MW)	2012 Load Serving Capability Increase (MW)
Agua Fria Generation	25	0	115
Kyrene Generation	170	56	58
Ocotillo Generation	62	257	83
Santan Generation	144	50	61
West Phoenix Generation	12	0	117

Generation sensitivities outside of the Phoenix Metro area are listed in Table 4.

Table 4
Generation Sensitivities Outside Phoenix

Generation Source Increase by 100 MW	2005 Load Serving Capability Increase (MW)	2008 Load Serving Capability Increase (MW)	2012 Load Serving Capability Increase (MW)
Sundance Generation	94	26	54
Desert Basin Generation	114	28	32
Hassayampa Area Generation	0	0	0
Panda Gila River Generation	0	0	11

The results indicate that the effectiveness of a generator is dependant upon the critical outage, whether the limitation is thermal or voltage, the critical element, and the location of the generator in respect to the direction the power is flowing through the critical element. For example, in 2005 with the critical outage being the Jojoba-Kyrene 500-kV line and the critical element being

the Rudd-Orme 230-kV line, the generators that will allow the load-serving capability to increase the greatest are those that inject their power to the east of the Orme substation. And, in 2008, with the critical outage being the Agua Fria-Glendale 230-kV line and the critical element being the West Phoenix-Lincoln Street 230-kV line, because they inject power east of Lincoln Street the Ocotillo generators are most effective in increasing the load-serving capability. In contrast, with the West Phoenix generators injecting power immediately upstream of the critical element, they will be least effective in increasing the load-serving capability.

IV. YUMA AREA

A. Description of Yuma Area

Currently the Yuma area is served from three transmission sources:

- APS' North Gila 500/69-kV substation, which is located east of Yuma. Two 69-kV lines extend west and southwest from this substation into Yuma to serve Yuma area load. A third 69-kV line interconnects into WAPA's Gila substation.
- WAPA's Gila 161/69-kV station, which is also located east of Yuma. From this station, APS has one 69-kV line into the Yuma load area and one 69-kV tie to APS' North Gila substation.
- APS' Yucca 69-kV station, which is located on the west side of Yuma near the Colorado River. APS' local generation is located at this station, along with three 69-kV lines into the load area and an interconnection to IID's 161-kV system through two 161/69-kV transformers. The IID 75 MW steam-generating unit is also located at this substation.

Figure 7 shows the transmission system in 2005 and the metering points for the Yuma area load pocket. The second North Gila 500/69-kV transformer is planned in 2005 as a result of the 2003 RMR study.

Figure 7

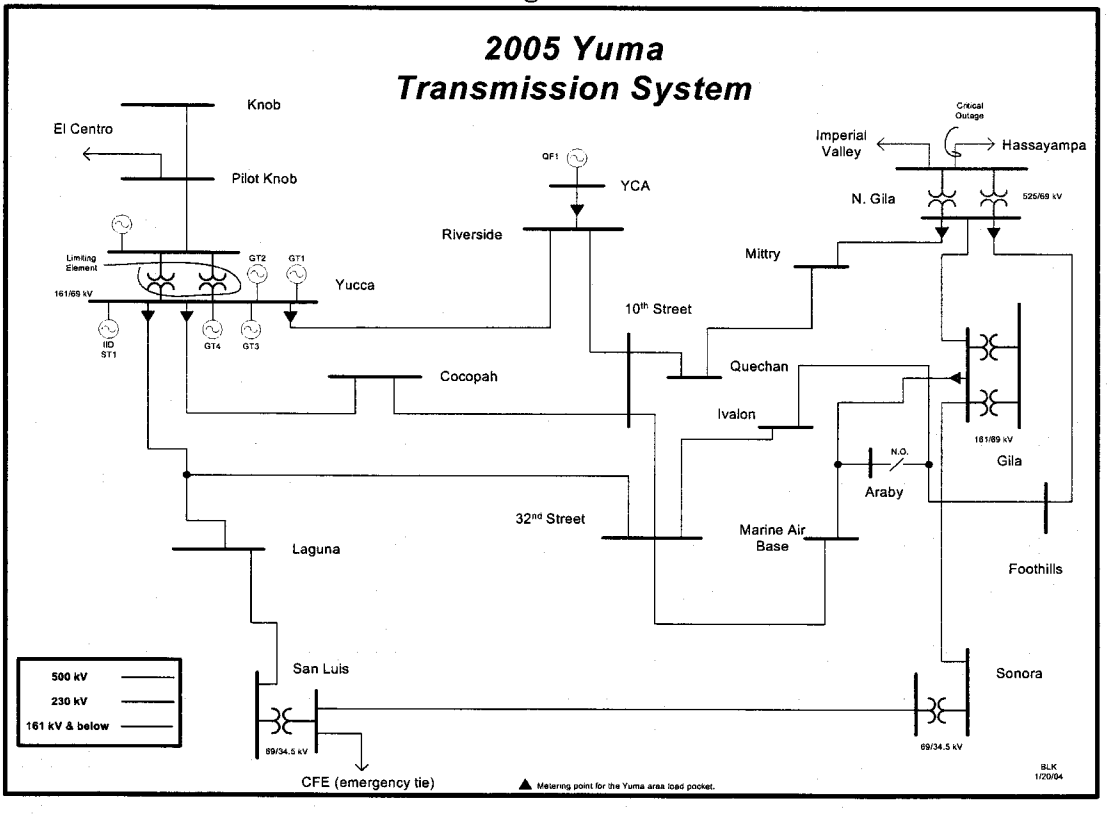

The Welton-Mohawk interconnection facilities and generators, which are planned for 2006, were modeled in the 2008 case. The interconnection facilities will consist of a 161-kV line and a third 161/69-kV transformer to WAPA's Gila substation, along with a 161-kV line and 161/69-kV to APS' North Gila 69-kV substation. These facilities can be seen below in Figure 8.

Figure 8

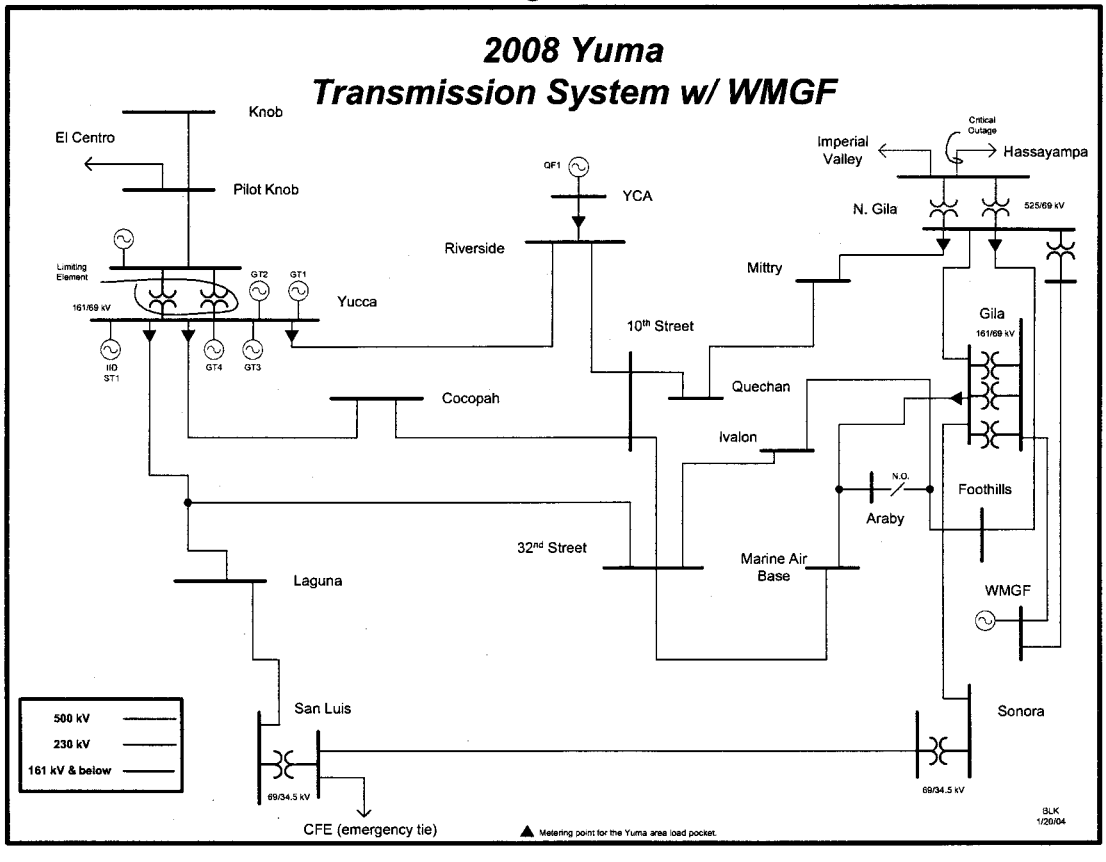

The only change in the model of the Yuma area for 2012 was the addition of the 230-kV line from Gila Bend to the Yuma area. The specific Yuma termination for this line has not yet been determined and for the 2012 analysis it was assumed to be interconnected to the 32nd Street substation. This can be seen in Figure 9.

Figure 9

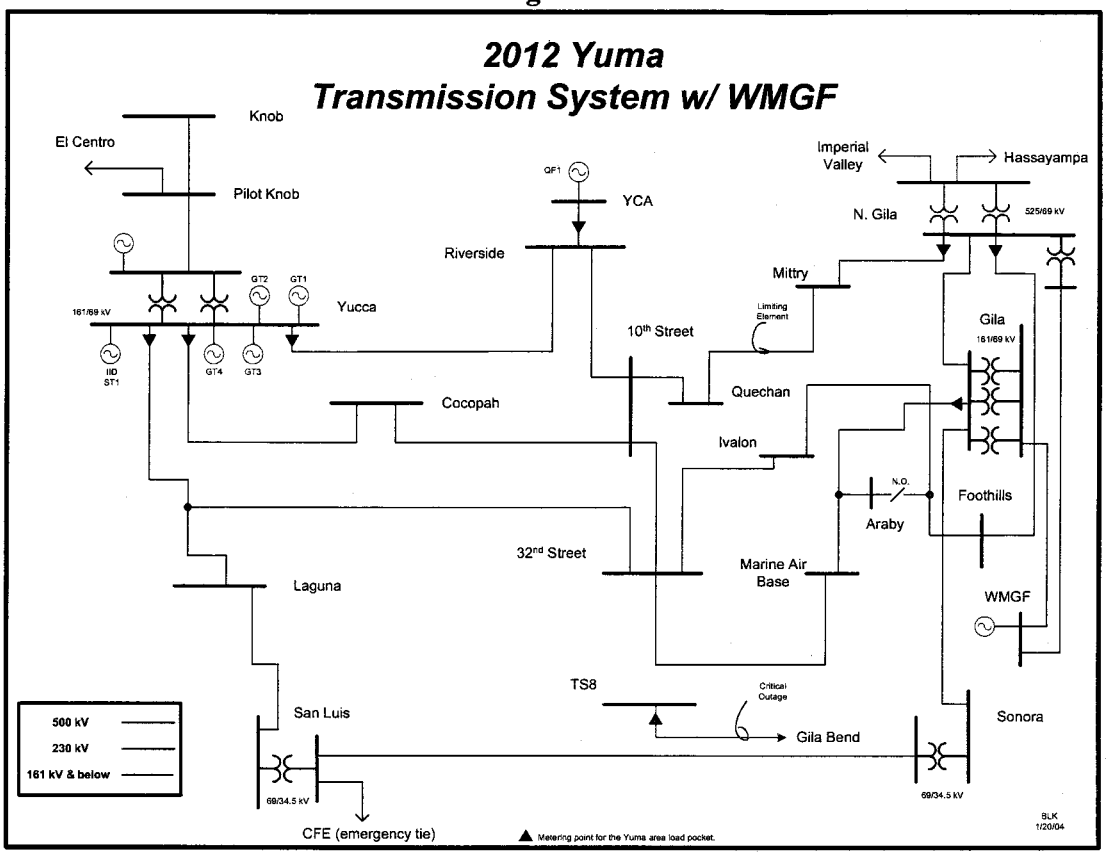

B. Yuma Area Critical Outages

Several critical contingencies exist affecting the determination of the system import limit for the Yuma area during the 2004-2013 time frame. For the 2004-2011 time frame, these include the Hassayampa-N.Gila 500-kV line, the Yucca-Laguna tap 69-kV line, and the N. Gila-Gila 69-kV line. In 2012 and beyond, the loss of the new TS8-Gila Bend 230-kV line also becomes a critical contingency.

A loss of the Hassayampa-N.Gila 500-kV line typically overloads the Yucca 161/69-kV transformers, while the N.Gila-Gila 69-kV outage results in overloading the N.Gila-Mittry 69-kV line or the Mittry-Quechan 69-kV line. An outage of the Yucca-Laguna tap 69-kV line causes an overload on the Riverside-10th Street 69-kV line. In 2012, a loss of the Gila Bend-TS8 230-kV line causes the flows on the Mittry-Quechan 69-kV line and Yucca-Laguna tap 69-kV line to overload.

C. Yuma Area - SIL for 2005, 2008 and 2012

With planned system additions for the Yuma area, along with some accelerated projects (see Table 2), the SIL for the Yuma area will increase each study period. For 2005, 2008, and 2012 the SIL will be 265 MW, 292 MW and 410 MW, respectively. Results of these studies are shown in Figures 10 through 12.

Figure 10

Yuma Area 2005

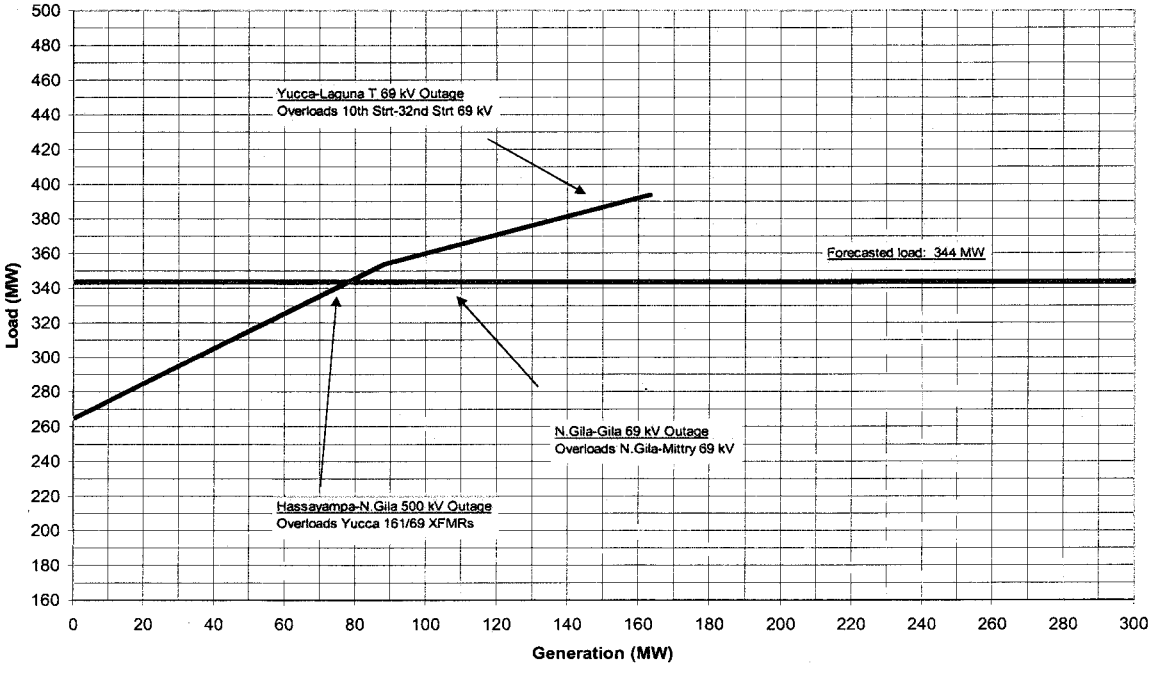

Figure 11

Yuma Area 2008

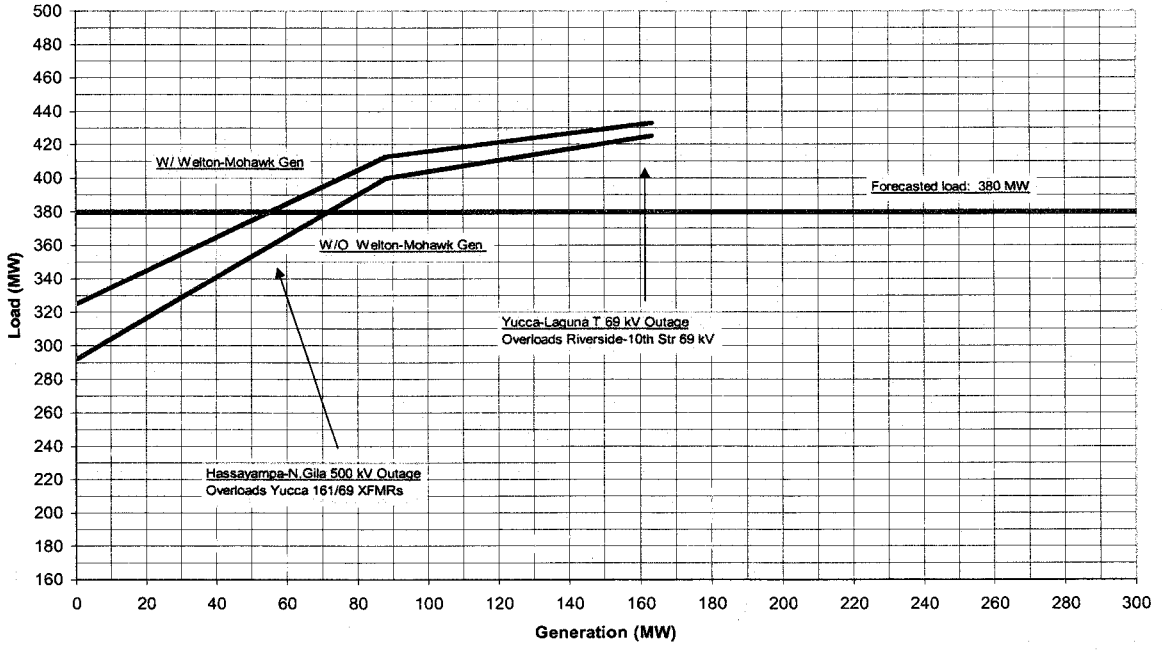

Figure 12

Yuma Area 2012

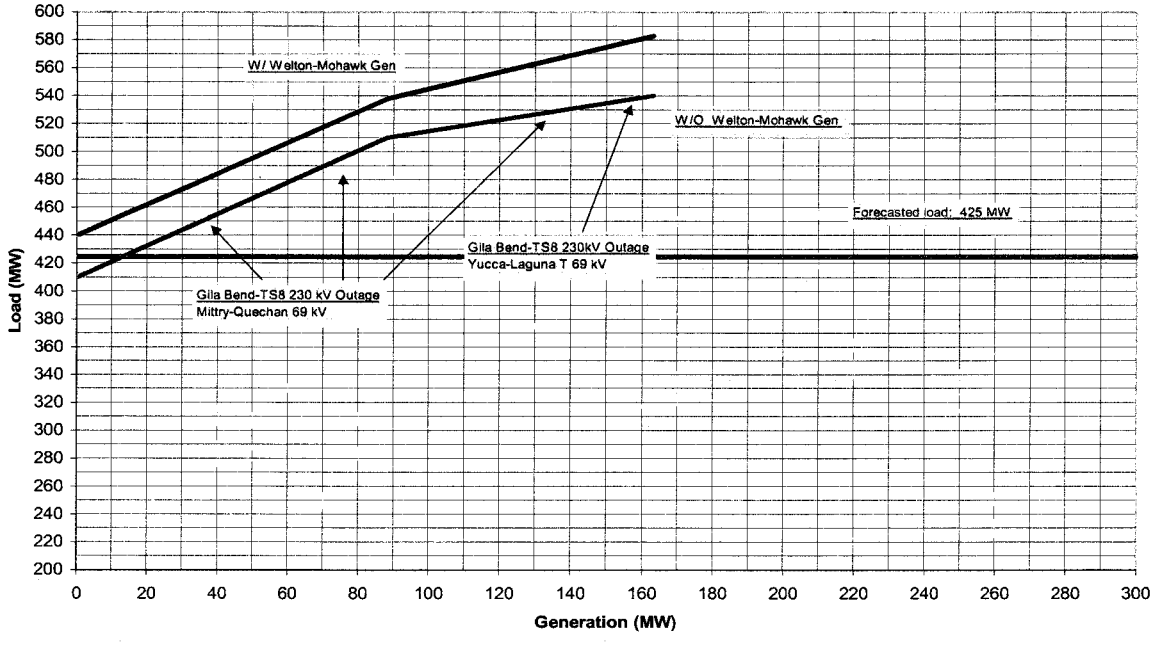

Also, the load listed along the vertical axis is the sum of the entire load within the Yuma area. In performing this analysis, all previously planned projects were included in the model as well as some additional projects that were added to the sub-transmission plans. Also, several previously planned shunt capacitor banks were accelerated and several new banks were added to maximize the capability of the transmission system by ensuring that the area was not severely voltage limited. These projects are listed in Table 5.

Table 5
Yuma Projects

Study Case	Case Description	
	System	Projects Added
2005 base case	Existing	Foothills 69-kV, 32Mvar cap banks Gila cap bank Laguna cap bank 2nd N.Gila 500/69-kV transformer
2008 base case	2005 base case	32nd Street-10th Street 69-kV reconductor N.Gila-Mittry 69-kV reconductor 32nd Street-Ivalon 69-kV reconductor
2012 base case	2008 base case	Gila Bend-TS8 230-kV line TS8 cap banks

D. Generation Sensitivities

Welton-Mohawk is a planned generating facility located east of Yuma that is scheduled for commercial operation during 2006. The net capacity of this planned facility is 310 MW. Figures 11 and 12 show import limits for the Yuma area for 2008 and 2012 with and without the Welton Mohawk plant modeled. For each of these years the case with Welton-Mohawk includes the generation modeled at full output. From Figure 12 it is seen that Yuma area import increases approximately 10 MW for each 100 MW of Welton-Mohawk generation. However, the effect of the Welton-Mohawk on Yuma import capability is somewhat less in the 2008 timeframe, as seen in Figure 11. With the Welton-Mohawk generation off-line, the interconnection facilities by themselves bring no additional import capability. The remaining generation in the Yuma area is located at or near the Yucca power plant and has equal impact on the import limit into the Yuma area.

V. Analysis of RMR Conditions

A. Phoenix Area

1. Annual RMR Conditions

An RMR condition exists when the local load is greater than the SIL. In such cases, the RMR condition is the amount of generation that must be located inside of the constrained load area to meet the utility's peak load. RMR conditions for the Phoenix area are shown in Table 6 and are represented in the load-duration curves in Figures 13, 14, and 15.

Table 6

Phoenix RMR Conditions Without Valley Generation

(MW)

	PHOENIX		
	2005	2008	2012
Peak Load	11,141	12,425	14,406
Generation	-	-	-
Reserves	-	-	-
Net Valley Generation	-	-	-
Import Capability	8,617	10,511	11,103
Net Gen + Import	8,617	10,511	11,103
Must-Run Generation	2,524	1,914	3,303
Hours Load Exceeds Gen + Imp	678	338	758
Energy - GWH	550	222	805
Energy Percent of Valley Load	1.2%	0.4%	1.3%

Figure 13

PHOENIX LOAD DURATION & RMR CONDITION (2005)

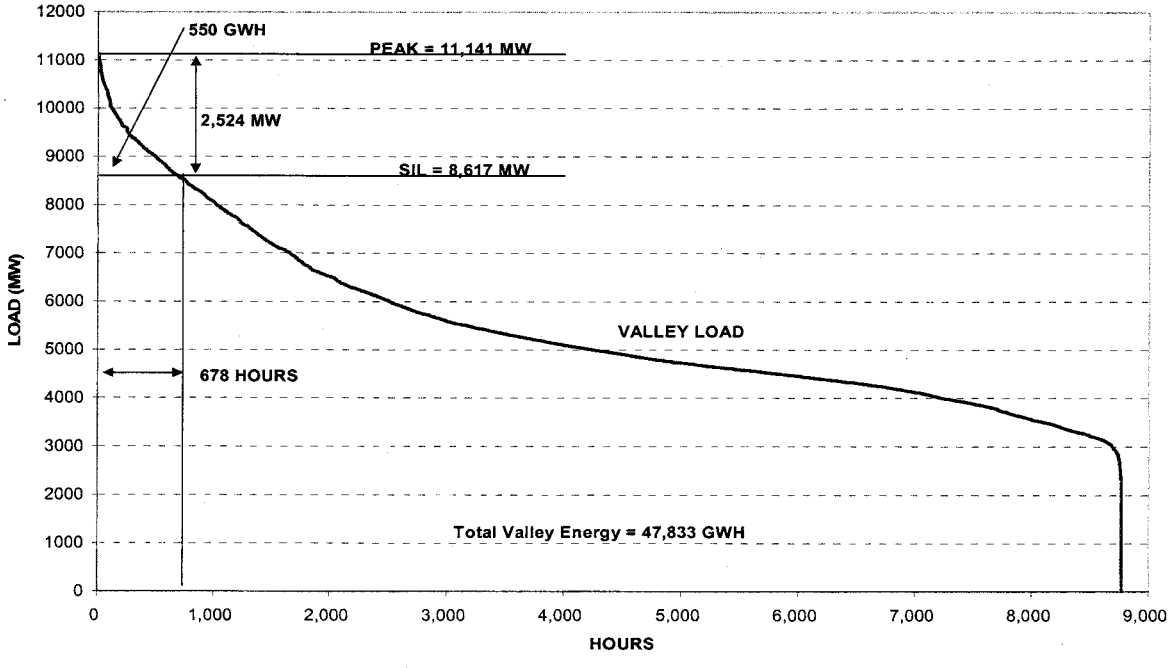

Figure 14

PHOENIX LOAD DURATION & RMR CONDITION (2008)

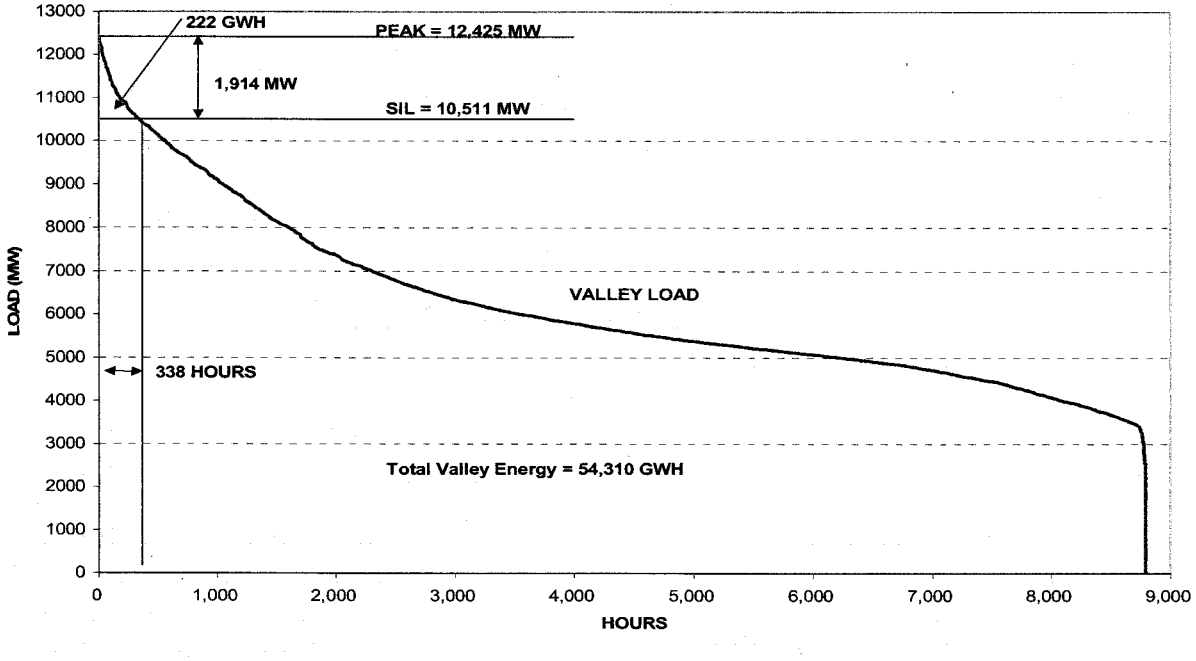

Figure 15

PHOENIX LOAD DURATION & RMR CONDITION (2012)

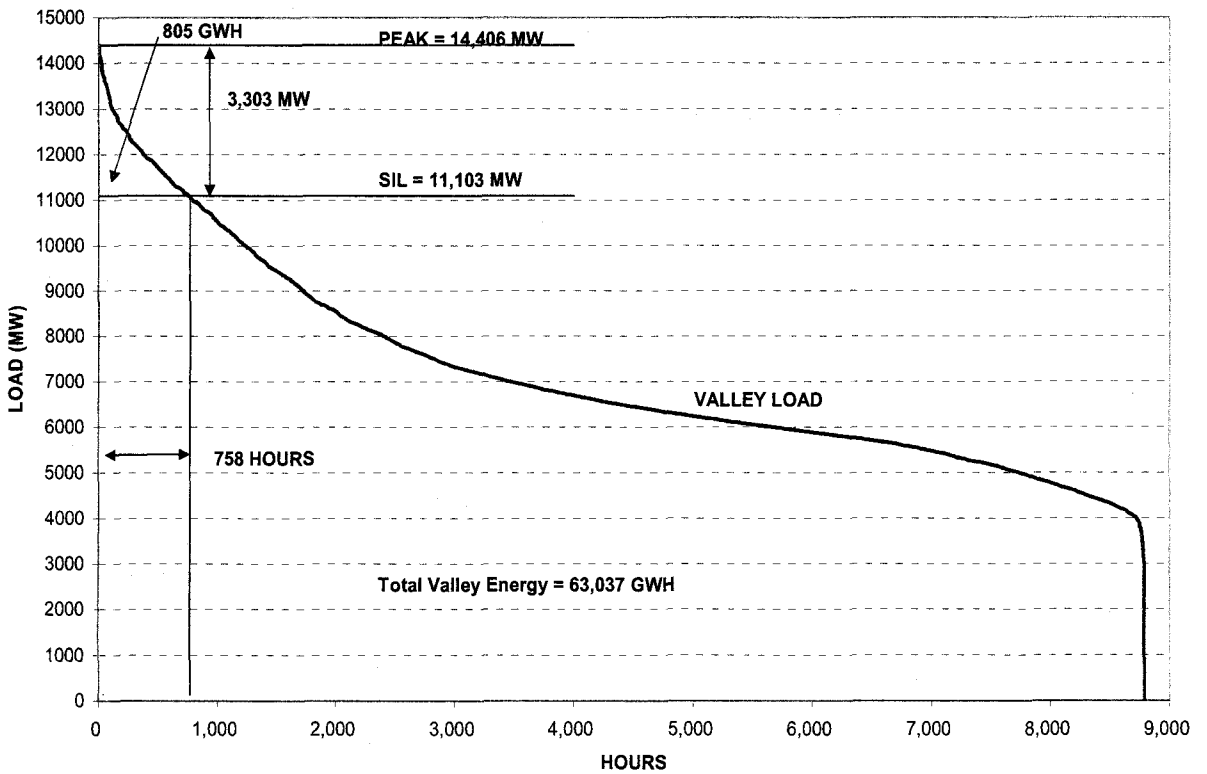

Table 6 shows that Phoenix is expected to require from 2,524 MW to 3,303 MW of local generation resources over and above its import capability to meet peak load. These resources can be located inside the Phoenix area constraint. For Phoenix, generation is estimated to be in a must-run condition for between 678 to 758 hours per year. However, because RMR occurs only at peak, the amount of associated energy is only approximately one percent of the total Phoenix area energy requirements, as shown in Figures 13, 14, and 15 above.

2. Maximum Load Serving Capability (MLSC)

MLSC is the maximum load that can be reliably served in the load pocket. It is the import capability plus the generation capability located inside the load pocket, minus a reserve margin allowance for generation reliability. Based on the load forecast and SIL presented in this analysis, and existing and planned local generation, the following MLSCs for Phoenix were developed. The approach used also shows how much generation or transmission may be needed to reliably meet load.

These results along with the generation and transmission assumptions are depicted in Table 7. As shown on this table, additional resources are not required in years 2005 and 2008, but in 2012, 519 MW of either additional transmission import capability or local generation is necessary to serve the Phoenix area load reliably. However, the energy associated with this capacity need is very small — 6 GWH.

Table 7

Phoenix Area Maximum Load Serving Capability
(MW)

	PHOENIX		
	2005	2008	2012
Peak Load	11,141	12,425	14,406
Valley Generation	3,374	3,649	3,649
Required Reserves	(809)	(865)	(865)
Net Valley Generation	2,565	2,784	2,784
SIL	8,617	10,511	11,103
MLSC	11,182	13,295	13,887
Projected Reserves	850	1735	346
Hours Load Exceeds MLSC	-	-	26
Energy - GWH	-	-	6
Energy Percent of Valley Load	0.0%	0.0%	0.0%

3. Area Load Forecast

The actual peak load within the Phoenix area constraint is shown in Table 8 for 1999-2003, along with projected peak load for 2005, 2008 and 2012. This peak load represents load growth as well as the expanding boundaries of the Phoenix area, as discussed in Section III, part A and shown in Figures 1, 2, and 3. Projected peak load is based on the same assumptions embodied in APS' total system load forecast used for budgeting and planning. This peak load is the load measured just inside the defined Phoenix area constraint. The peak load is net of EHV transmission losses of about 3.8 percent.

Table 8

Phoenix and Yuma Load and Energy Forecast
(MW / GWH)

	HISTORICAL					FORECAST		
	1999	2000	2001	2002	2003	2005	2008	2012
PHOENIX								
LOAD	7,854	8,688	9,179	9,290	9,663	11,141	12,425	14,406
ENERGY	35,232	38,711	39,654	40,426	42,140	47,833	54,310	63,037
Load Factor	51.2%	50.7%	49.3%	49.7%	49.8%	49.0%	49.8%	49.8%
APS YUMA								
LOAD	270	273	296	292	321	344	380	425
ENERGY	1,197	1,262	1,330	1,332	1,394	1,517	1,663	1,869
Load Factor	50.6%	52.6%	51.2%	52.0%	49.6%	50.4%	49.8%	50.0%

The Phoenix area has historically had about a 50 percent load factor. Phoenix area APS load forecasts were developed by estimating a multiple regression model using historic hourly load data, weather, and number of retail customers. These historic relationships (correlations) were used against the metro area customer forecast, and a forecast of Phoenix weather to produce the APS Phoenix area load. The same process was followed to develop the hourly forecast load for SRP. The SRP forecast was then added to the APS forecast to obtain a total valley load forecast.

4. Generation

There are currently three owners of generation electrically located inside the Phoenix area — APS with 660 MW, SRP with 1,523 MW, and PWEC with 641 MW. Load serving entities (i.e., APS and SRP) own a combined total of 2,183 MW of local generation that is currently in service. Table 9 shows operational data associated with each unit.

Table 9

PHOENIX AREA GENERATION

OWNER	PLANT	TYPE	SUMMER CAPABILITY	MINIMUM LOAD	MINIMUM UP TIME	MINIMUM DOWN TIME	FOR	EFOR	FUEL TYPE
APS	Ocotillo 1	ST	110	30	8	8	4%	6%	NG
APS	Ocotillo 2	ST	110	30	8	8	4%	6%	NG
APS	Ocotillo GT1	GT	50	4	1	8	10%	12%	NG
APS	Ocotillo GT2	GT	50	4	1	8	10%	12%	NG
APS	West Phoenix GT1	GT	50	4	1	8	10%	12%	NG
APS	West Phoenix GT2	GT	50	4	1	8	10%	12%	NG
APS	West Phoenix CC1	CC	80	30	3	8	3.5%	7%	NG
APS	West Phoenix CC2	CC	80	30	3	8	3.5%	7%	NG
APS	West Phoenix CC3	CC	80	30	3	8	3.5%	7%	NG
PWEC	West Phoenix CC4	CC	112	84	6	4	4%	4%	NG
PWEC	West Phoenix CC5	CC	529	178	4	4	8%	8%	NG
SRP	Agua Fria 1	ST	113	57	8	8	4%	6%	NG
SRP	Agua Fria 2	ST	113	57	8	8	4%	6%	NG
SRP	Agua Fria 3	ST	181	92	8	8	4%	6%	NG
SRP	Agua Fria 4	GT	73	35	1	8	10%	12%	NG
SRP	Agua Fria 5	GT	73	32	1	8	10%	12%	NG
SRP	Agua Fria 6	GT	73	32	1	8	10%	12%	NG
SRP	Crosscut HY1	HY	3	N/A	N/A	N/A	0%	0%	WAT
SRP	Kyrene 1	ST	34	14	8	8	4%	6%	NG
SRP	Kyrene 2	ST	72	29	8	8	4%	6%	NG
SRP	Kyrene GT4	GT	59	25	1	8	10%	12%	NG
SRP	Kyrene GT5	GT	53	24	1	8	10%	12%	NG
SRP	Kyrene GT6	GT	53	24	1	8	10%	12%	NG
SRP	Kyrene CC1	CC	250	161	4	4	8%	8%	NG
SRP	Santan 1	CC	92	35	3	8	3.5%	7%	NG
SRP	Santan 2	CC	92	35	3	8	3.5%	7%	NG

SRP	**Santan 3**	**CC**	**92**	**36**	**3**	**8**	**3.5%**	**7%**	**NG**
SRP	**Santan 4**	**CC**	**92**	**35**	**3**	**8**	**3.5%**	**7%**	**NG**
SRP2	**Santan 5**	**CC**	**550**	**330**	**4**	**4**	**8%**	**8%**	**NG**
SRP2	**Santan 6**	**CC**	**275**	**165**	**6**	**4**	**8%**	**8%**	**NG**
SRP	**South Consolidated 1**	**HY**	**1**						**WAT**
SRP	**Transport GT1**	**GT**	**4**						**NG**
PHOENIX TOTAL			**3,649**						

NOTES:
1) Based on WECC data as of 1/1/2003
2) Santan expansion assumes an in-service date of 5/2005 (ST5) & 5/2006 (ST6)

APS owns West Phoenix CC 1-2-3, West Phoenix CT 1-2, Ocotillo ST 1-2, and Ocotillo CT 1-2. These units collectively have a 660 MW summer rating. These units have historically operated at capacity factors in the 3-30 percent range, and are expected to operate at lower capacity factors for the next few years as new high-efficiency plants come on line in Arizona and the Southwest.

SRP owns the Agua Fria, Kyrene and Santan generating stations inside the Phoenix area, totaling 1,523 MW of generation. These units were mostly built in the late 1950s to the mid-1970s. The new Kyrene CC unit went into service in 2002. SRP plans to construct another 825 MW of combined-cycle generation at the Santan plant. For this study, it is assumed the new Santan units will go into service in 2005 (Santan 5) and 2006 (Santan 6).

PWEC has constructed West Phoenix CC 4 (112 MW), which went into service in June 2001, and the West Phoenix CC 5 (529 MW) unit, which came on-line in July 2003. These units improve reliability to the Phoenix area.

5. Reserves

Reliability within a load pocket such as Phoenix must be evaluated differently than for an unconstrained system. For example, although a 15 percent reserve margin or a largest hazard margin may be adequate for unconstrained total system loads, it does not provide adequate reliability to load pockets that cannot access all reserves present in the WECC interconnected system. APS performs an analysis that considers the size, forced outage rate, and effective forced outage rate of each unit in the load pocket to determine the probability that enough generation will be available when needed. The required reserve values used for this study were based on a 99% reliability criteria. This criteria results in a reserve requirement for Phoenix of 809 MW in 2005. It means that at least 2565 MW (3374 MW Phx generation less 809 MW reserves) will be available to meet load 99% of the time. This means that if the GE MAPS simulation was run for 100 simulated years, all load would be served in 99 of them. The reserve requirement will change as resources are installed and/or retired. The reserve requirement is 865 MW once the Santan unit 6 is in-service.

The reserve values are used in calculating the load serving capability for the Phoenix load area. In addition, the loads used in this analysis are based on Phoenix experiencing average weather. If the Phoenix area has a hot summer, the load would be higher than projected, and the gas turbine and combined-cycle units' output would be reduced due to the hotter weather.

B. Yuma Area

1. Annual RMR Conditions

RMR conditions for the Yuma constrained area are shown in Table 10 and pictorially represented in a load-duration curve in Figures 16, 17, and 18. Table 10 shows that APS requires 88 MW (2008) of resources over and above its transmission import capability to meet peak load in Yuma. These resources can be APS-owned generation or non-APS owned generation located inside the constrained area. APS is in a must-run condition for between 714 to 12 hours per year

in Yuma and the amount of associated energy is approximately 1.0 percent of APS' total Yuma energy requirement.

Table 10

Yuma RMR Conditions Without Generation
(MW)

	YUMA		
	2005	2008	2012
Peak Load	344	380	425
Generation	-	-	-
Reserves	-	-	-
Net Generation	-	-	-
Import Capability	265	292	410
Net Gen + Import	265	292	410
Must-Run Generation	79	88	15
Hours Load Exceeds Gen + Imp	714	676	12
Energy - GWH	20	21	0
Energy Percent of Yuma Load	1.3%	1.2%	0.0%

Figure 16

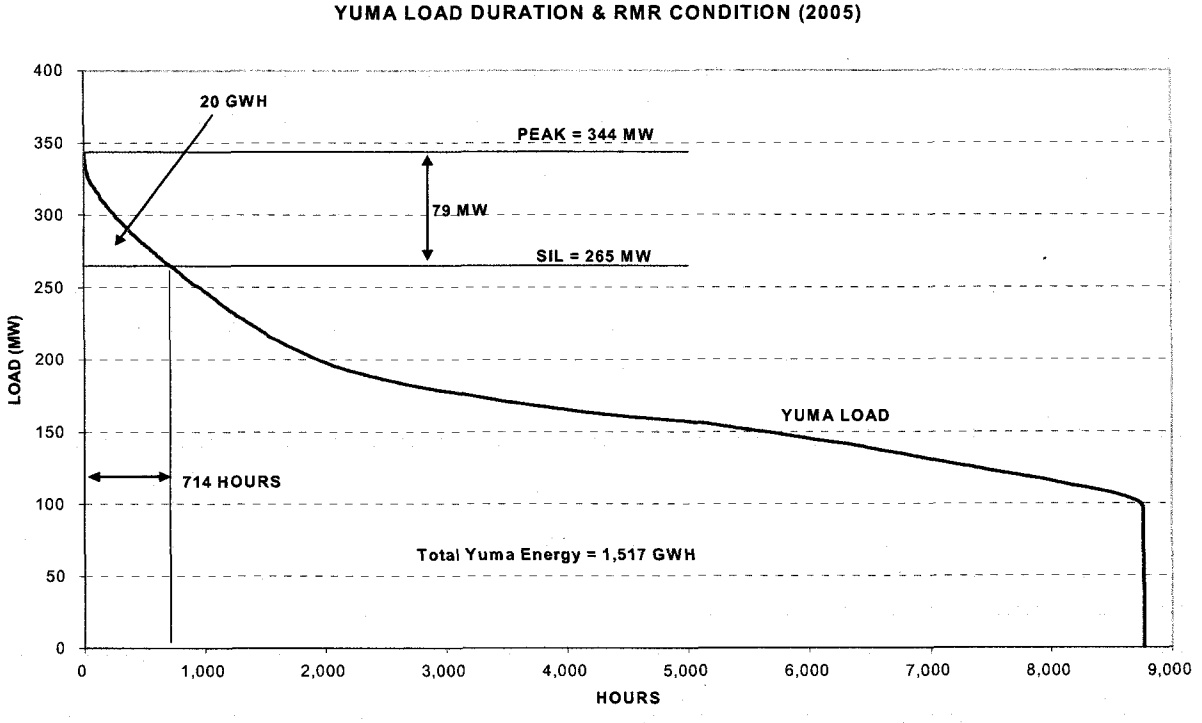

Figure 17

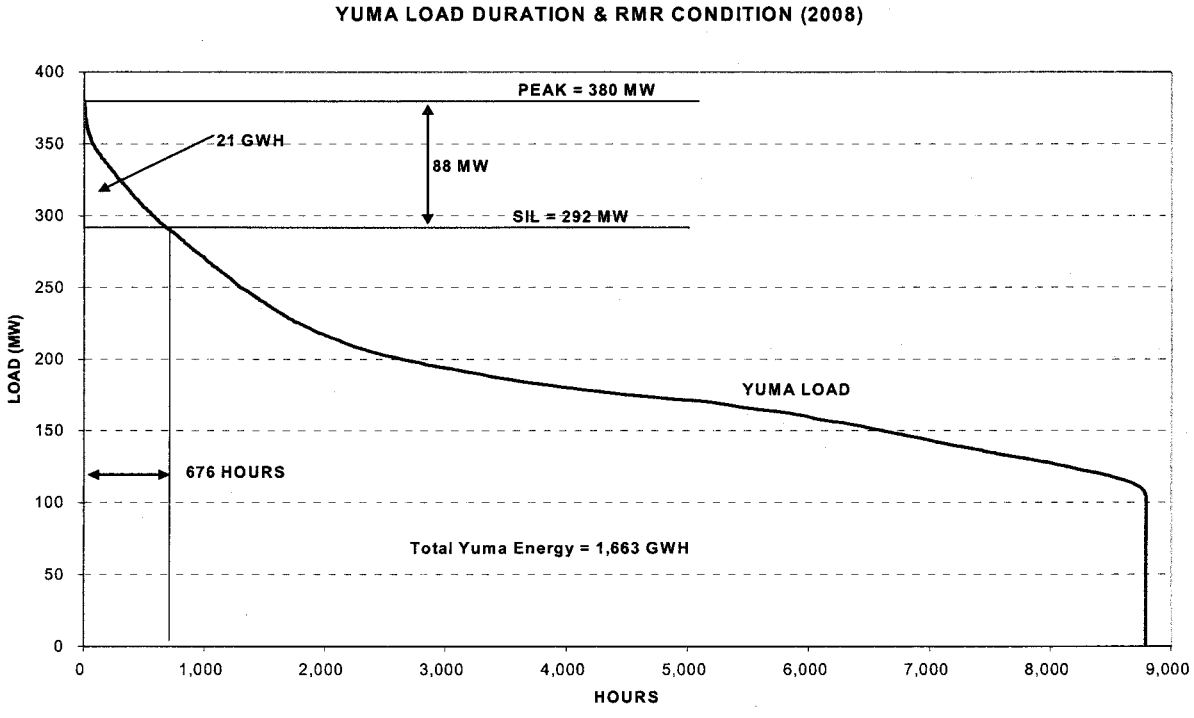

Figure 18

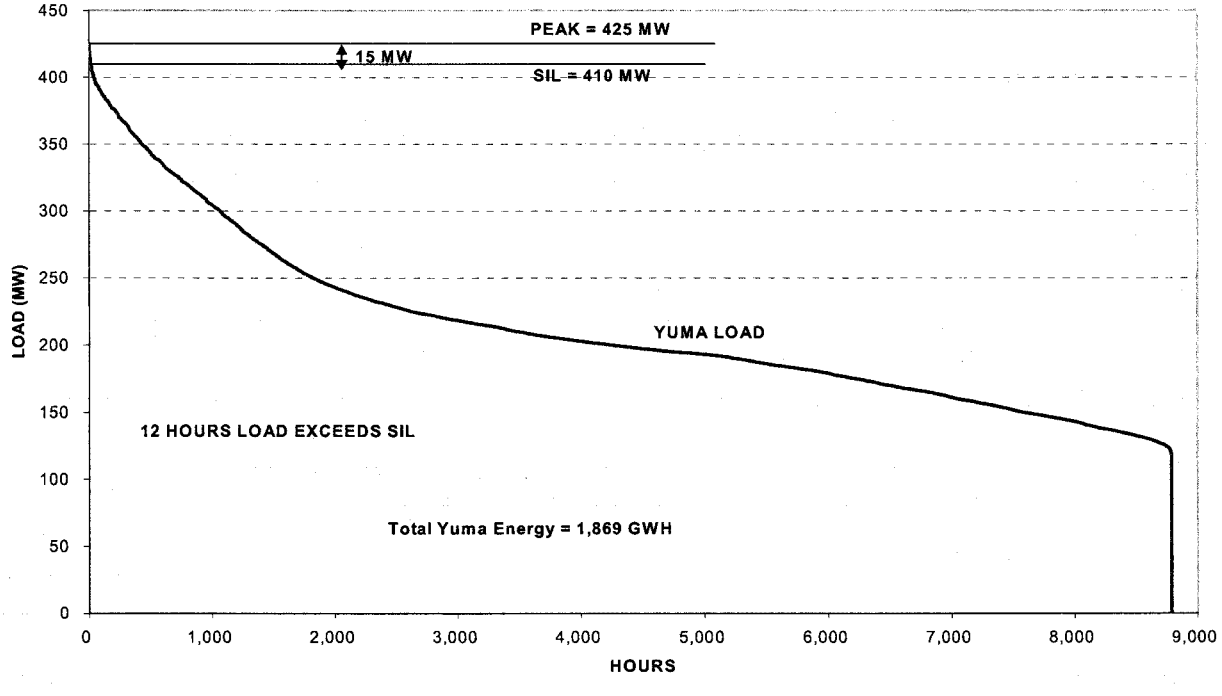

2. Maximum Load Serving Capability (MLSC)

Based on the load forecast and SIL presented in this report, and the 267 MW of local generation, the following MLSCs were developed. This approach also shows how much generation or transmission may be needed to reliably meet load. As shown in Table 11, from 2005 to 2012 APS could serve 394 to 539 MW of load without additional resources. With a load forecast of between 344 MW to 425 MW, this resource need can be met from non-APS owned generation (Yucca steam and YCA units) within the load pocket. Also, when the Yucca steam and YCA units are running, APS' requirement for generation inside the load pocket is reduced on a one-for-one basis.

Table 11

Yuma Area Maximum Load Serving Capability
(MW)

	YUMA		
	2005	2008	2012
Peak Load	344	380	425
Local Generation	267	267	267
Required Reserves	(138)	(138)	(138)
Net Local Generation	129	129	129
SIL	265	292	410
MLSC	394	421	539
Projected Reserves	188	179	252
Hours Load Exceeds MLSC	-	-	-
Energy - GWH	-	-	-
Energy Percent of Yuma Load	0.0%	0.0%	0.0%

3. Area Load Forecast

Table 8 shows APS' Yuma peak load for 1999-2003, and projected peak for 2005, 2008 and 2012. Projected peak is based on the same assumptions used in APS' total system load forecast used for budgeting and planning. This peak is the load measured just inside the Yuma area. It is net of EHV transmission losses of about 3.8 percent. Yuma load represents approximately 5 percent of APS' total system load. Yuma has historically had a slightly higher load factor than that of the Phoenix area — 52 percent compared to 50 percent. Yuma area APS load forecasts were developed by estimating a multiple regression model using historic hourly load data, weather, and number of retail customers. These historic relationships (correlations) were used

against the Yuma area customer forecast, and a forecast of Yuma weather to produce the Yuma area load.

4. Generation

APS, IID and YCA own generation inside the Yuma load pocket. These plants have a summer capacity rating of 267 MW. Five of the six units run on natural gas while the other plant (Yucca CT 4) runs on oil. Additional power plant data for this generation is provided in Table 12. Of these plants, only the combustion turbines are owned by APS.

Although operated by APS, IID dispatches its steam plant to meet its load and spinning reserve needs. YCA is a cogeneration plant that has a contract with San Diego Gas & Electric (SDG&E). Although APS has no dispatch rights to these units, whenever the units are running they provide internal generation in the Yuma area for purposes of using the import nomogram.

Table 12

YUMA AREA GENERATION

OPERATOR	PLANT	TYPE	SUMMER CAPABILITY[1]	MINIMUM LOAD	MINIMUM UP TIME	MINIMUM DOWN TIME	FOR	EFOR	FUEL TYPE
APS	Yucca GT1	GT	18	2	1	2	10%	10%	NG
APS	Yucca GT2	GT	18	2	1	2	10%	10%	NG
APS	Yucca GT3	GT	52	5	1	2	10%	10%	NG
APS	Yucca GT4	GT	51	5	1	2	10%	10%	FO2
APS SUBTOTAL			139						
IID	Yuma Axis 1	ST	75	18	8	8	4%	6%	NG
YCA	Yuma Cogen 1	CC	36	14	N/A	N/A	3.5%	7%	NG
YCA	Yuma Cogen 2	CC	17	7	N/A	N/A	3.5%	7%	NG
YCA SUBTOTAL			53						
YUMA TOTAL			267						

NOTES: 1) Based on WECC data as of 1/1/2003

5. Reserves

Using a probabilistic generation analysis, the reserve margin for Yuma was calculated to be 138 MW.

VI. ECONOMIC ANALYSIS OF RMR

A. Introduction

To consider potential economic effects resulting from using local generation or arising from RMR conditions, an economic analysis was performed using a regional dispatch model. For this economic analysis, the production cost of meeting Phoenix loads was determined with the existing transmission import limitations in place. Next, a second hypothetical case was built in which the transmission import limits were removed. Comparing the two cases shows the economic costs of the transmission constraint.

These two cases were simulated with GE MAPS and their outputs were compared to determine the cost of transmission constraints. GE MAPS is a detailed regional production-costing model that includes the generation and transmission system of the entire WECC. GE MAPS dispatches all generators on an economic basis to meet the overall WECC system load within constraints for individual system control area's reserve requirements and within transmission constraints. The GE MAPS model also shows sales of economic generation to, and economic purchases from, other utilities in the region subject to regional transmission constraints.

Much of the data used in modeling comes from public sources, however some of GE MAPS assumptions have been developed by APS and can be found in Appendix A. The GE MAPS database on existing generation was initially developed by several utilities in the West in the early 1990s to evaluate the economics of interregional transmission projects. It has been enhanced by the WECC in the mid-1990s and, like many other users of the model, APS continues to enhance it to reflect system improvements and resources. This model includes all new generation expected to be built in the West, including the plants under construction or in operation near Hassayampa.

The transmission modelings in GE MAPS are based on the WECC's bulk power flow cases, and were updated to reflect expected system enhancements for 2005, 2008, and 2012. Transmission modeling of Yuma was enhanced by APS to accurately model the transmission constraints in that load pocket, based on APS' operational experience. The transmission model is an electrical flow model as opposed to a transport model. That means that transmission flows are subject to physical electrical constraints as well as scheduling constraints. Electrical constraints of the system are based on the WECC's path rating catalog, with additional local constraints such as the Phoenix import constraints. A description of GE MAPS (Appendix B) as well as some of its output is provided in Appendices C and D to this report.

The following items were quantified based on the GE MAPS simulations:

- Number of hours per year the Phoenix and Yuma area transmission system is expected to be constrained by the import limits;
- Phoenix and Yuma generation capacity factors;
- Cost to serve the Phoenix system, including fuel, variable O&M, purchase power cost and wholesale interchange sales margins; and

- Phoenix and Yuma generation emissions.

West Phoenix CC 4 and 5 and Santan CC 5 and 6 were included in the simulation. When the new combined cycles are operating, whether they are producing power for APS, SRP, or another entity, they mitigate must-run conditions in the Phoenix area because the plants are electrically located inside the Phoenix area constraint. Thus, if these units are scheduled outside the Phoenix area, a like-amount of power can be counter-scheduled back into the Phoenix area without affecting the transmission import limits. Due to the high efficiency of new combined cycle units, it is anticipated that older existing generation within the Phoenix area will operate less than it has historically. This older existing generation, however, remains particularly valuable as inexpensive capacity reserves.

B. Phoenix

1. Phoenix Imports

Table 13 shows that under economic dispatch conditions for Phoenix area generation, Phoenix approached its transmission import limits less than 0.5% of the hours in a year.

Table 13

IMPACT OF ELIMINATING PHOENIX IMPORT LIMITS

	With Import Limits			Without Import Limits			Difference (With minus Without)		
	2005	2008	2012	2005	2008	2012	2005	2008	2012
Hours Limiting	18	0	14	0	0	0	18	0	14
Phx Plant Generation (GWH)	3,330	4,808	8,164	3,323	4,808	8,163	6	0	1
Phx Plant Capacity Factor	11.3%	15.0%	25.5%	11.3%	15.0%	25.5%	0.0%	0.0%	0.0%
Cost of Constraints ($K)							0	0	84

2. Operation of Phoenix area Generating Units

Historically the Phoenix area's combined-cycle power plant capacity factors have ranged from 10 to 46 percent, with an average of about 24 percent. Capacity factors for steam-fired plants ranged from 6 to 42 percent, averaging about 15 percent. Capacity factors for simple-cycle combustion turbines ranged 0 to 22 percent, averaging about 4 percent. Historical capacity factors are shown in Table 14 by plant type for the period 1993 to 2002.

Operation of these units in 1999-2002 was higher than the historical average because the Western Interconnection and the Phoenix area both experienced high price volatility, high load growth, and few new generation resources had been added since the 1980s. With new higher-efficiency power plants coming on line, as well as the presence of the new Palo Verde-Rudd 500 kV transmission line, the older Phoenix area units are expected to run at lower capacity factors. As noted above, however, these units remain critical to maintaining Phoenix area reliability.

Even if the Phoenix area transmission import limits were totally eliminated, these older units would still be needed to economically meet summer peak loads. Elimination of the constraints has a minor impact on the capacity factors of all Phoenix area plants. Removing the transmission constraint reduces local generation by less than 6 GWH per year. Table 13 summarizes the results of the simulation analysis.

Table 14

PHOENIX AREA POWER PLANT HISTORICAL CAPACITY FACTOR (%)

	1993	1994	1995	1996	1997	1998	1999	2000	2001	2002
TOTAL PHOENIX										
STEAM	6.6	6.3	6.5	6.7	7.1	10.0	21.2	26.5	42.0	14.2
COMBINED CYCLE	16.5	19.3	17.2	12.9	10.6	17.0	27.7	36.3	46.0	34.3
COMBUSTION TURBINE	0.6	0.9	0.4	0.5	1.0	1.8	2.6	5.8	21.9	4.2

3. Cost Impacts

An estimate of the cost of the transmission import constraints can be determined by comparing the system cost to serve Phoenix customers with and without constraints. Costs included in the analysis are fuel, variable O&M, purchased power and wholesale sale margin credits. The results of this analysis showed no significant costs as a result of the constraint. See Table 13.

4. Emissions Impact

In addition to economic modeling, the GE MAPS analysis evaluated the change in plant air emissions that would result from removing the transmission constraint. Specifically, the emission impact to the Phoenix area from removing transmission constraints and "moving" generation outside the Phoenix area was calculated. Four criteria pollutants are routinely tracked for power plants: NO_X, CO, VOCs and PM_{10}. Maricopa County is a non-attainment area for CO and PM_{10}. NO_X and VOCs are precursors for ozone and therefore are included.

The emissions impact from power plant emissions in the Phoenix area was estimated by using the average emission rates of normal operation (such as starts-and-stops, short run times) of APS Phoenix area units along with the modeled change in energy production. Emissions were also estimated for the other non-APS Phoenix area units. Changes in emissions resulting from entirely

eliminating the transmission import constraint into Phoenix are shown in Table 15. For comparison purposes, total emissions in Maricopa County were estimated by Maricopa County Environmental Services Department for 1999. Their emissions estimates include all stationary point sources, area sources, non-road mobile sources and on-road mobile and biogenic sources. To put the results into perspective, changes in Phoenix area power plant emissions are shown as a percentage of total Maricopa County emissions.

Table 15
Phoenix Area Air Emissions Reduction

Pollutant	Reduction[1] (tons/year)	Reduction of Phoenix Area Emissions (% of total emissions from all sources)
VOC	0.0	0.000
NO_x	4.0	0.007
CO	1.0	0.000
PM_{10}	0.0	0.000[2]

[1]2005 results, impact for 2008 and 2012 is negligible

[2]Reduction % is based on 1994 actual emissions.

Table 16 shows APS and Phoenix area emissions by type.

Table 16

PHOENIX POWER PLANT EMISSIONS (TONS)									
	With Import Limits			Without Import Limits			Difference (With minus Without)		
	2005	2008	2012	2005	2008	2012	2005	2008	2012
NOx	245	339	698	241	339	696	4	0	2
CO	68	101	187	67	101	186	1	0	1
PM_{10}	85	124	214	85	124	214	0	0	0
VOC	31	45	79	31	45	79	0	0	0

C. Yuma

1. Yuma Imports

Transmission imports to the Yuma load pocket are provided in Appendix D. Unlike the Phoenix area, these imports do approach their limits at various times throughout the year. These plots are included in Appendix D for the cases in which the limits were removed.

Table 17 shows that APS could approach its import limits for 336 hours per year. The energy associated with these hours amounts to 8 GWH. During these hours, it would have been more economical to import cheaper power either generated on APS own units outside the Yuma area or purchased from the wholesale market if the import limits were increased.

Table 17

IMPACT OF ELIMINATING YUMA IMPORT LIMITS

	With Import Limits			Without Import Limits			Difference (With minus Without)		
	2005	2008	2012	2005	2008	2012	2005	2008	2012
Hours Limiting	336	2	0	0	0	0	336	2	0
Yuma Generation (GWH)									
APS	8	0	0	0	0	0	8	0	0
Yuma	30	25	23	22	25	23	8	0	0
Yuma Plant Capacity Factor									
APS	0.6%	0.0%	0.1%	0.0%	0.0%	0.1%	0.6%	0.0%	0.0%
Yuma	1.6%	1.3%	1.2%	1.2%	1.3%	1.2%	0.4%	0.0%	0.0%
Cost of Constraints ($K)									
APS							500	0	0

2. Operation of Yuma Units

Historically, the Yucca CTs have operated at capacity factors of between 0.5 up to 18 percent, as shown in Table 18. On average they are in the 1 to 2 percent range.

Table 18

YUMA POWER PLANTS HISTORICAL CAPACITY FACTOR (%)

	1993	1994	1995	1996	1997	1998	1999	2000	2001	2002
YUCCA										
CT1	0.3	0.6	0.4	0.4	1.1	1.5	1.4	5.0	23.4	4.0
CT2	0.4	0.4	0.5	0.4	1.2	1.5	1.4	6.9	21.8	4.6
CT3	1.5	1.4	1.0	1.4	2.8	3.6	3.5	12.2	22.0	14.4
CT4	0.0	0.2	0.0	0.2	0.2	0.7	0.3	4.8	11.9	0.3
Total Yucca	0.7	0.7	0.5	0.7	1.4	2.0	1.8	7.9	18.4	6.6
YUMA AXIS	18.4	15.9	15.3	33.3	45.2	45.4	53.7	41.3	53.0	48.0
TOTAL YUMA	6.7	5.9	5.5	11.7	16.2	16.7	19.3	19.2	30.1	20.6

3. Cost Impacts

The GE MAPS analysis indicates that the Yuma import limit will be constraining from 336 hours in 2005 and zero hours in 2012. The cost of this constraint in 2005 is approximately $500,000. See Table 17.

4. Emission Impacts

The emission impact on the Yuma area due to a potential relieving of transmission constraints and "moving" generation outside of the Yuma area was determined by GE MAPS similarly to the Phoenix analysis. Unlike Phoenix, however, Yuma County is a non-attainment area for PM_{10} only. Impacts on power plant emissions in Yuma were estimated by using average emission rates of normal operation (such as starts-and-stops, short run times) of APS units along with the change in energy production. Emissions were also estimated for the other non-APS units. By entirely eliminating the import limits into Yuma, emissions produced by power plants located inside the Yuma load pocket would change as shown in Table 19.

Table 19

YUMA POWER PLANT EMISSIONS (TONS)
(Includes Yucca 1-4 and Yuma Axis)

	With Import Limits			Without Import Limits			Difference (With minus Without)		
	2005	2008	2012	2005	2008	2012	2005	2008	2012
NOx	37	19	19	17	19	19	20	0	0
CO	10	5	5	5	5	5	5	0	0
PM_{10}	2	2	2	1	2	2	1	0	0
VOC	2	0	0	0	0	0	1	0	0

VII. CONCLUSIONS

Phoenix area Conclusions

1. All Phoenix area transmission and local generation are necessary to reliably serve Phoenix area peak load in 2005 with the local generation reserve margin just exceeding the required reserve margin. In 2008, the local generation reserve margin significantly exceeds the required reserve margin. However, in 2012 the reserve margin is 346 MW which is 519 MW less than the required reserve margin of 865 MW. Although the reserve margin deficiency is not itself related to RMR, it is a load-serving issue that should be addressed. To mitigate this deficiency APS and SRP are presently evaluating both transmission alternatives to increase import capability and alternatives to increase Phoenix area generation.

2. During the summer, Phoenix area load is expected to exceed the available transmission import capability for approximately 680 hours in 2005, 340 hours in 2008, and 760 hours in 2012. These hours represent only approximately one percent of the annual energy requirements for the Phoenix area.

3. From a total Phoenix load, transmission, and resources viewpoint, import limits are expected to cause a minimal amount of local generation to be dispatched out of economic dispatch order in 2005 and 2012, and no impact in 2008.

4. The estimated annual economic cost of Phoenix area RMR generation is negligible, therefore advancement of transmission projects to increase import capability are presently not cost justified.

5. Removing the transmission constraint could reduce total Phoenix area air emissions by the following annual amount for 2005. There is a minimal impact for years 2008 and 2012 due to the increased import capabilities and resources resulting in fewer hours of operating local generation.

Table C1
Phoenix area Air Emissions Reduction

Pollutant	Reduction[1] (tons/year)	Reduction of Phoenix Area Emissions (% of total emissions from all sources)
VOC	0.0	0.000
NO_x	4.0	0.007
CO	1.0	0.000
PM_{10}	0.0	0.000

[1]2005 results, impact for 2008 and 2012 is negligible

6. Removing the import restriction into the Phoenix area has no impact on local generation capacity factor. The capacity factor ranges from approximately 11% in 2005 to 26% in 2012.

Yuma Area Conclusions

7. All existing Yuma area transmission and generation resources are necessary to reliably serve the Yuma area load.

8. The Yuma area load is expected to exceed the available transmission import capability for 714 hours in 2005, 676 hours in 2008 and 12 hours in 2012 although the amount of total load in the Yuma area is approximately 350-425 MW.

9. From a total Yuma load, transmission, and resources viewpoint, the import constraint could cause APS Yuma generation to be dispatched out of economic dispatch order for 336 hours in 2005, 2 hours in 2008, and 0 hours in 2012.

10. The estimated annual economic cost of Yuma area generation required to run out of economic dispatch order is relatively small, therefore advancement of transmission projects to increase import capability are presently not cost justified.

11. Removing the transmission constraint could reduce total Yuma area air emissions by the following annual amount for 2005. There is a minimal impact for years 2008 and 2012 due to the increased import capabilities resulting in fewer hours of operating local generation.

Table C2
Yuma Area Air Emissions Reduction

Pollutant	Reduction[1] (tons/year)	Reduction of Yuma Area Emissions (% of total emissions from all sources)
VOC	1.0	Unavailable
NO_x	20	Unavailable
CO	5	Unavailable
PM_{10}	1.0	0.001

[1]2005 results, impact for 2008 and 2012 is negligible

12. Removing the import restriction into the Yuma area could reduce the APS Yuma generation capacity factor from 1.6 percent to 1.2 percent in 2005.

Appendix A

Regional Production
Cost Modeling Assumptions

Regional Production Cost Modeling Assumptions

Regional load forecasts were based on the WECC's Estimated Loads and Resources report dated April, 2003.

Hydro modeling assumed average hydro conditions.

Generation additions were based on the WECC's Estimated Loads and Resources report dated April, 2003. The following amounts of new generation were added in the Arizona-New Mexico-Southern Nevada region:

2003-2005 8,800 MW
2006-2008 2,100 MW
2009-2012 600 MW

Generation retirements included Mohave 1&2 in 2006 in the AZ-NM-S Nev subregion, and a few more in the California subregion.

Generation Units Operational Characteristics (Average Values – AZ-NM-S Nev)

Fuel Type	Technology	Size MW	Install Date	Heat Rate Btu/kWh	VOM $/MWH	EFOR %
Gas/Oil	Steam			12,000	2.0	6%
Gas	SC	<100	Pre 2000	14,000	4.1	10%
Gas	SC	>100	Post 2000	10,500	4.1	5%
Gas	CC	<100	Pre 2000	8,700	2.0	5%
Gas	CC	500	Post 2000	7,000	3.0	5%
Coal	Steam	<500		11,200	1.4	7%
Coal	Steam	>500		10,000	1.4	9%

Natural gas price forecast was based on the average of several industry forecasts, delivered to Arizona.

2005 – 4.73 $/MMBtu
2008 – 4.35 $/MMBtu
2012 – 4.93 $/MMBtu

Appendix B

Powerflow Output Results

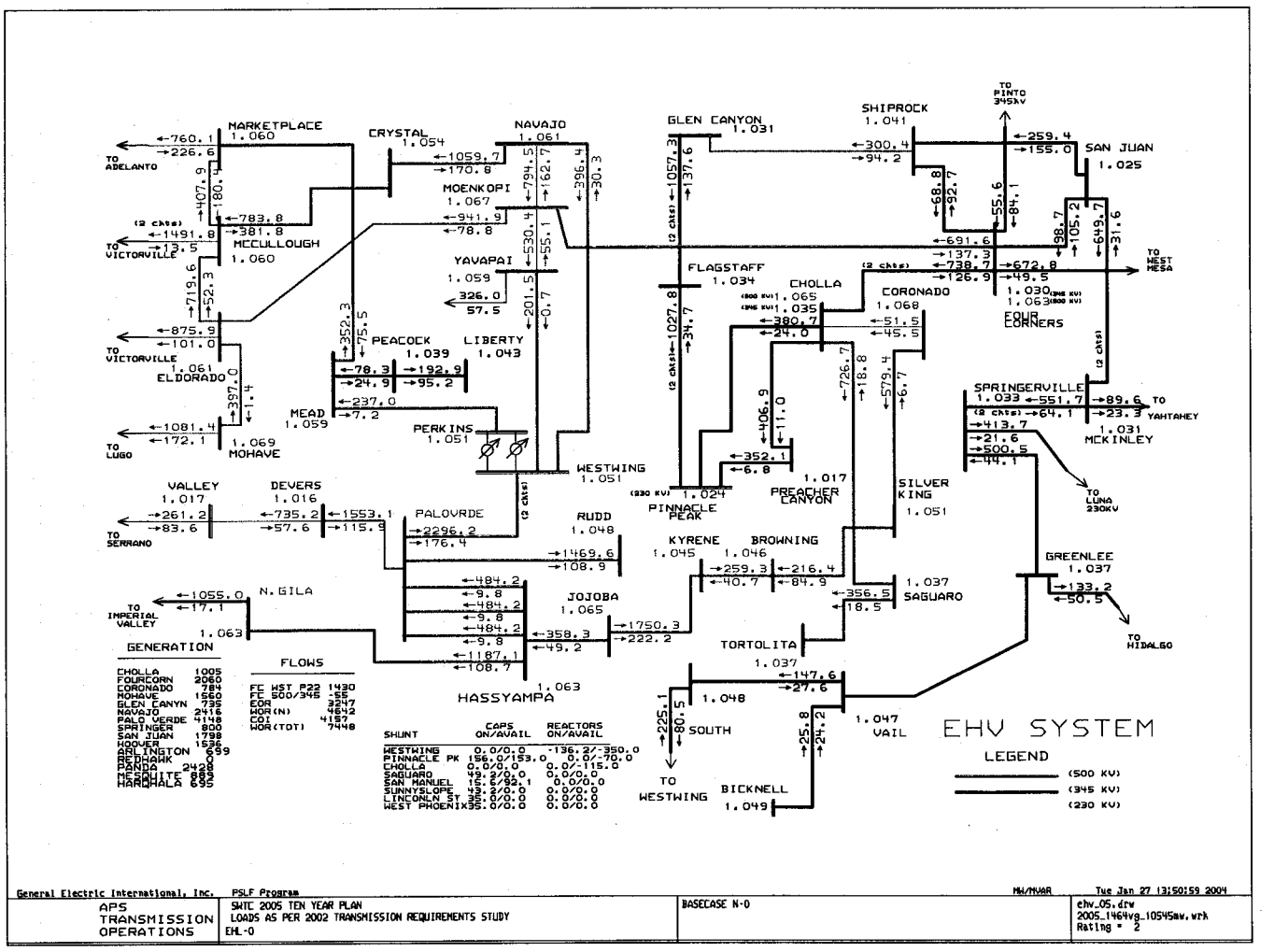
MARKETPLACE 1.060
CRYSTAL 1.054
NAVAJO 1.061
GLEN CANYON 1.031
SHIPROCK 1.041
TO PINTO 345KV
SAN JUAN 1.025
TO ADELANTO
MOENKOPI 1.067
MCCULLOUGH 1.060
TO VICTORVILLE
YAVAPAI 1.059
FLAGSTAFF 1.034
CHOLLA 1.065
CORONADO 1.068
FOUR CORNERS 1.030
TO WEST MESA
TO VICTORVILLE
ELDORADO 1.061
PEACOCK 1.039
LIBERTY 1.043
MEAD 1.059
PERKINS 1.051
SPRINGERVILLE 1.033
TO YAHTAHEY
MCKINLEY 1.031
TO LUGO
MOHAVE 1.069
WESTWING 1.051
PINNACLE PEAK 1.024
PREACHER CANYON 1.017
SILVER KING 1.051
VALLEY 1.017
DEVERS 1.016
TO SERRANO
PALOVRDE
RUDD 1.048
KYRENE 1.045
BROWNING 1.046
GREENLEE 1.037
TO LUNA 230KV
N. GILA 1.063
TO IMPERIAL VALLEY
JOJOBA 1.065
SAGUARO 1.037
TO HIDALGO
TORTOLITA 1.037
HASSYAMPA 1.063
SOUTH 1.048
VAIL 1.047
BICKNELL 1.049
TO WESTWING
EHV SYSTEM
LEGEND
(500 KV)
(345 KV)
(230 KV)
GENERATION
CHOLLA 1005
FOURCORN 2060
CORONADO 784
MOHAVE 1560
GLEN CANYN 735
NAVAJO 2416
PALO VERDE 4148
SPRINGER 800
SAN JUAN 1798
HOOVER 1536
ARLINGTON 699
REDHAWK 0
PANDA 2428
MESQUITE 885
HARQUAHALA 635
FLOWS
FC WST P22 1430
FC 500/345 -55
EOR 3247
WOR(N) 4642
COI 4157
WOR(TOT) 7448
SHUNT CAPS ON/AVAIL REACTORS ON/AVAIL
WESTWING 0.0/0.0 -136.2/-350.0
PINNACLE PK 156.0/153.0 0.0/-70.0
CHOLLA 0.0/0.0 0.0/-115.0
SAGUARO 49.2/0.0 0.0/0.0
SAN MANUEL 15.2/92.1 0.0/0.0
SUNNYSLOPE 49.2/0.0 0.0/0.0
LINCONLN ST 35.0/0.0 0.0/0.0
WEST PHOENIX 35.0/0.0 0.0/0.0
General Electric International, Inc.
PSLF Program
MW/MVAR
Tue Jan 27 13:50:59 2004
APS TRANSMISSION OPERATIONS
SWTC 2005 TEN YEAR PLAN
LOADS AS PER 2002 TRANSMISSION REQUIREMENTS STUDY
EHL-0
BASECASE N-0
ehv_05.drw
2005_1464vg_10545aw.wrk
Rating = 2

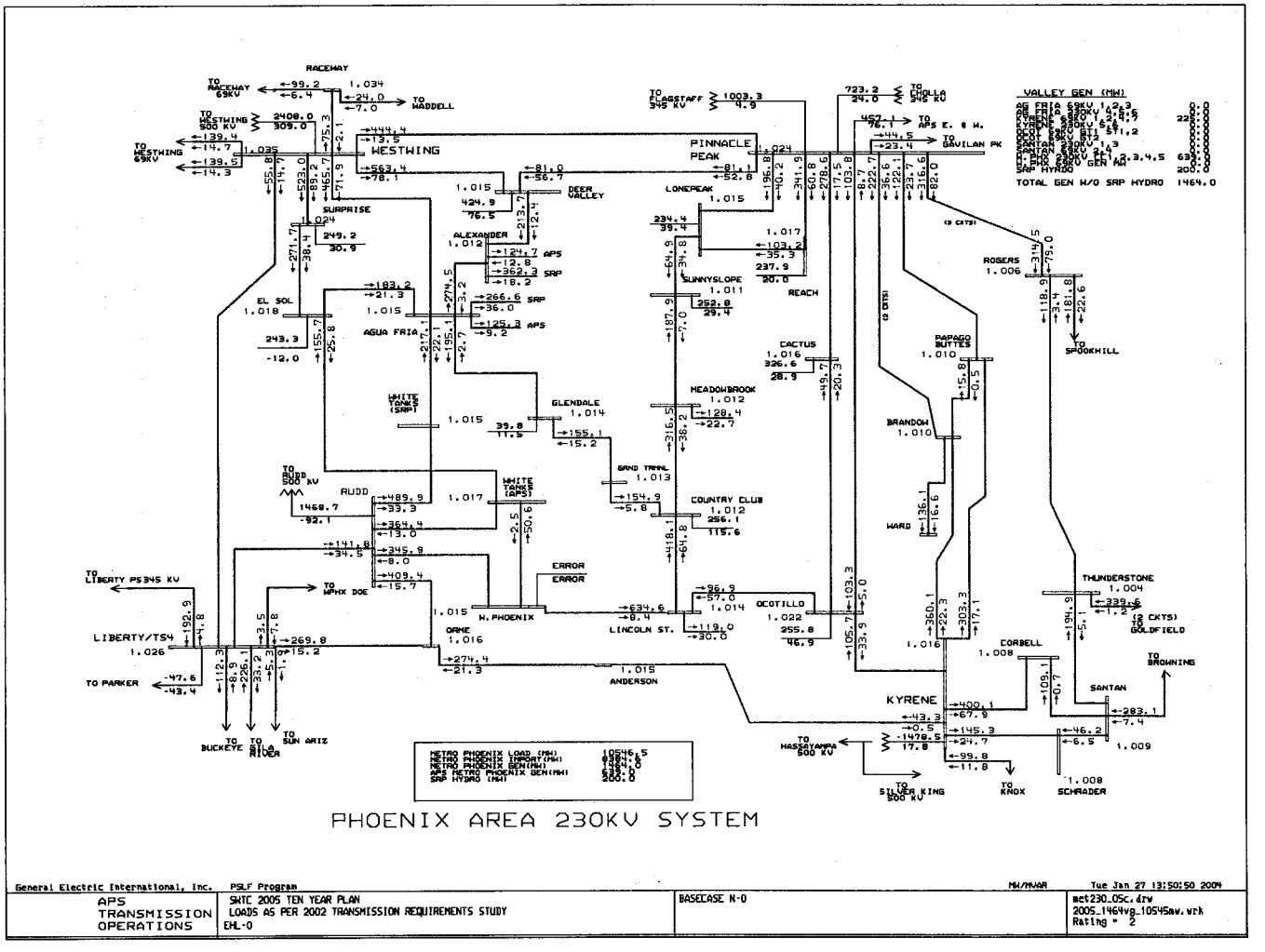
PHOENIX AREA 230KV SYSTEM
VALLEY GEN (MW)
TOTAL GEN W/O SRP HYDRO 1464.0
METRO PHOENIX LOAD (MW) 10546.5
METRO PHOENIX IMPORT(MW) 6384.8
METRO PHOENIX GEN(MW) 1464.0
APS METRO PHOENIX GEN(MW) 633.0
SRP HYDRO (MW) 200.0
General Electric International, Inc.
PSLF Program
MW/MVAR
Tue Jan 27 13:50:50 2004
APS TRANSMISSION OPERATIONS
SWTC 2005 TEN YEAR PLAN
LOADS AS PER 2002 TRANSMISSION REQUIREMENTS STUDY
EHL-0
BASECASE N-0
mct230_05c.drw
2005_1464vg_10545aw.wrk
Rating = 2

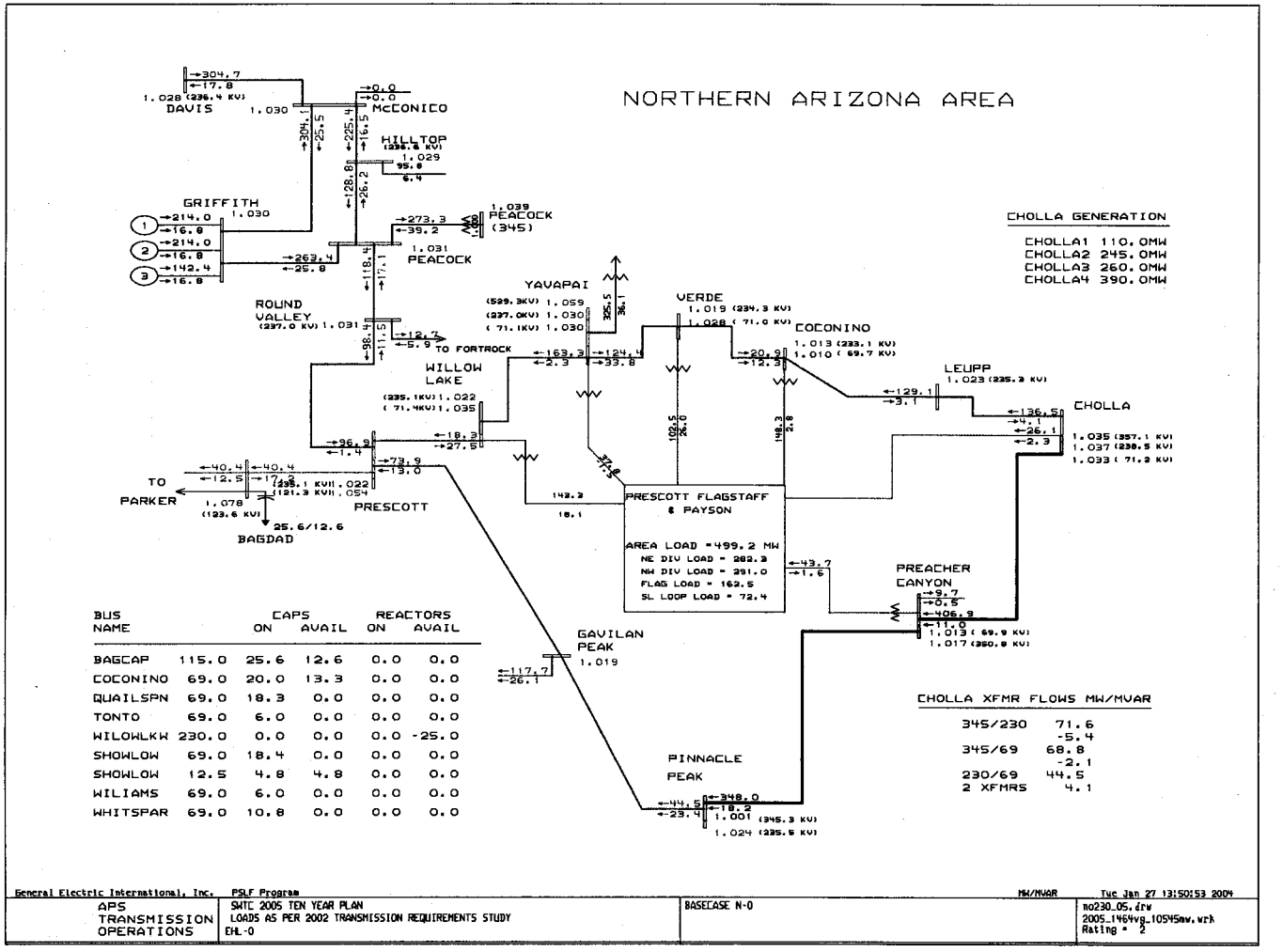
NORTHERN ARIZONA AREA
DAVIS
McCONICO
HILLTOP
GRIFFITH
PEACOCK (345)
PEACOCK
ROUND VALLEY
YAVAPAI
VERDE
COCONINO
LEUPP
CHOLLA
WILLOW LAKE
TO FORTROCK
TO PARKER
BAGDAD
PRESCOTT
PRESCOTT FLAGSTAFF & PAYSON
AREA LOAD = 499.2 MW
NE DIV LOAD = 282.3
NW DIV LOAD = 291.0
FLAG LOAD = 162.5
SL LOOP LOAD = 72.4
PREACHER CANYON
GAVILAN PEAK
PINNACLE PEAK
CHOLLA GENERATION
CHOLLA1 110.0MW
CHOLLA2 245.0MW
CHOLLA3 260.0MW
CHOLLA4 390.0MW
CHOLLA XFMR FLOWS MW/MVAR
345/230 71.6 -5.4
345/69 68.8 -2.1
230/69 44.5 4.1
2 XFMRS 4.1
BUS NAME CAPS ON AVAIL REACTORS ON AVAIL
BAGCAP 115.0 25.6 12.6 0.0 0.0
COCONINO 69.0 20.0 13.3 0.0 0.0
QUAILSPN 69.0 18.3 0.0 0.0 0.0
TONTO 69.0 6.0 0.0 0.0 0.0
WILOWLKW 230.0 0.0 0.0 0.0 -25.0
SHOWLOW 69.0 18.4 0.0 0.0 0.0
SHOWLOW 12.5 4.8 4.8 0.0 0.0
WILIAMS 69.0 6.0 0.0 0.0 0.0
WHITSPAR 69.0 10.8 0.0 0.0 0.0
General Electric International, Inc.
PSLF Program
MW/MVAR
Tue Jan 27 13:50:53 2004
APS TRANSMISSION OPERATIONS
SWTC 2005 TEN YEAR PLAN
LOADS AS PER 2002 TRANSMISSION REQUIREMENTS STUDY
EHL-0
BASECASE N-0
no230_05.drw
2005_1464vg_10545aw.wrk
Rating = 2

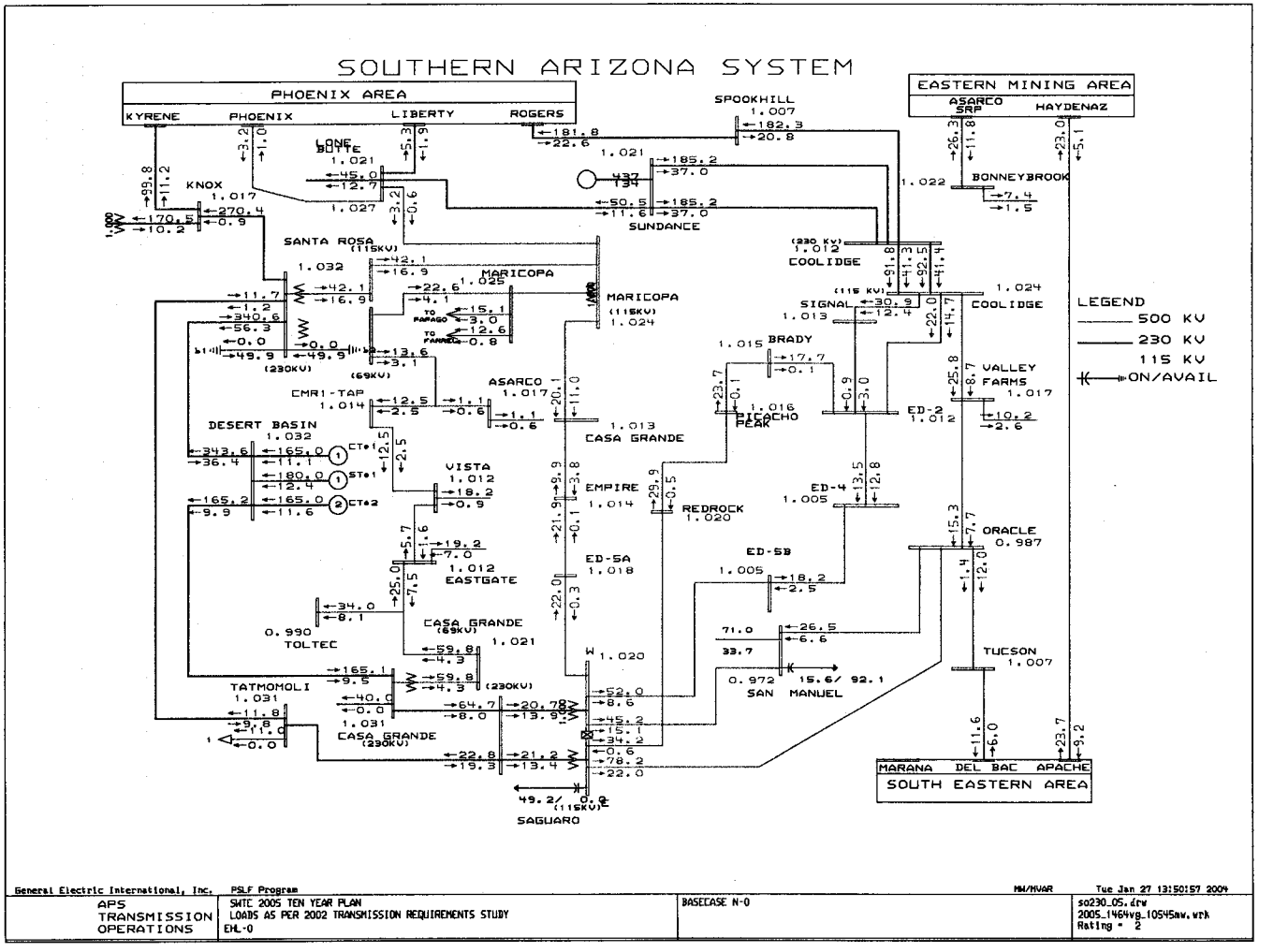
SOUTHERN ARIZONA SYSTEM
PHOENIX AREA
KYRENE
PHOENIX
LIBERTY
ROGERS
EASTERN MINING AREA
ASARCO SRP
HAYDENAZ
SPOOKHILL
1.007
LONE BUTTE
1.021
KNOX
1.017
SUNDANCE
BONNEYBROOK
SANTA ROSA (115KV)
1.032
MARICOPA
1.025
MARICOPA (115KV)
1.024
COOLIDGE
(230 KV)
1.012
COOLIDGE
1.024
SIGNAL
1.013
BRADY
1.015
VALLEY FARMS
1.017
ED-2
1.012
ASARCO
1.017
CMR1-TAP
1.014
DESERT BASIN
1.032
CASA GRANDE
1.013
PICACHO PEAK
1.016
VISTA
1.012
EMPIRE
1.014
REDROCK
1.020
ED-4
1.005
ORACLE
0.987
ED-5A
1.018
ED-5B
1.005
EASTGATE
1.012
TOLTEC
0.990
CASA GRANDE (69KV)
1.021
TUCSON
1.007
SAN MANUEL
0.972
TATMOMOLI
1.031
CASA GRANDE (230KV)
1.031
SAGUARO
1.020
MARANA
DEL BAC
APACHE
SOUTH EASTERN AREA
LEGEND
500 KV
230 KV
115 KV
ON/AVAIL
General Electric International, Inc.
PSLF Program
MW/MVAR
Tue Jan 27 13:50:57 2004
APS TRANSMISSION OPERATIONS
SWTC 2005 TEN YEAR PLAN
LOADS AS PER 2002 TRANSMISSION REQUIREMENTS STUDY
EHL-0
BASECASE N-0
s0230_05.drw
2005_1464vg_1054Saw.wrk
Rating = 2

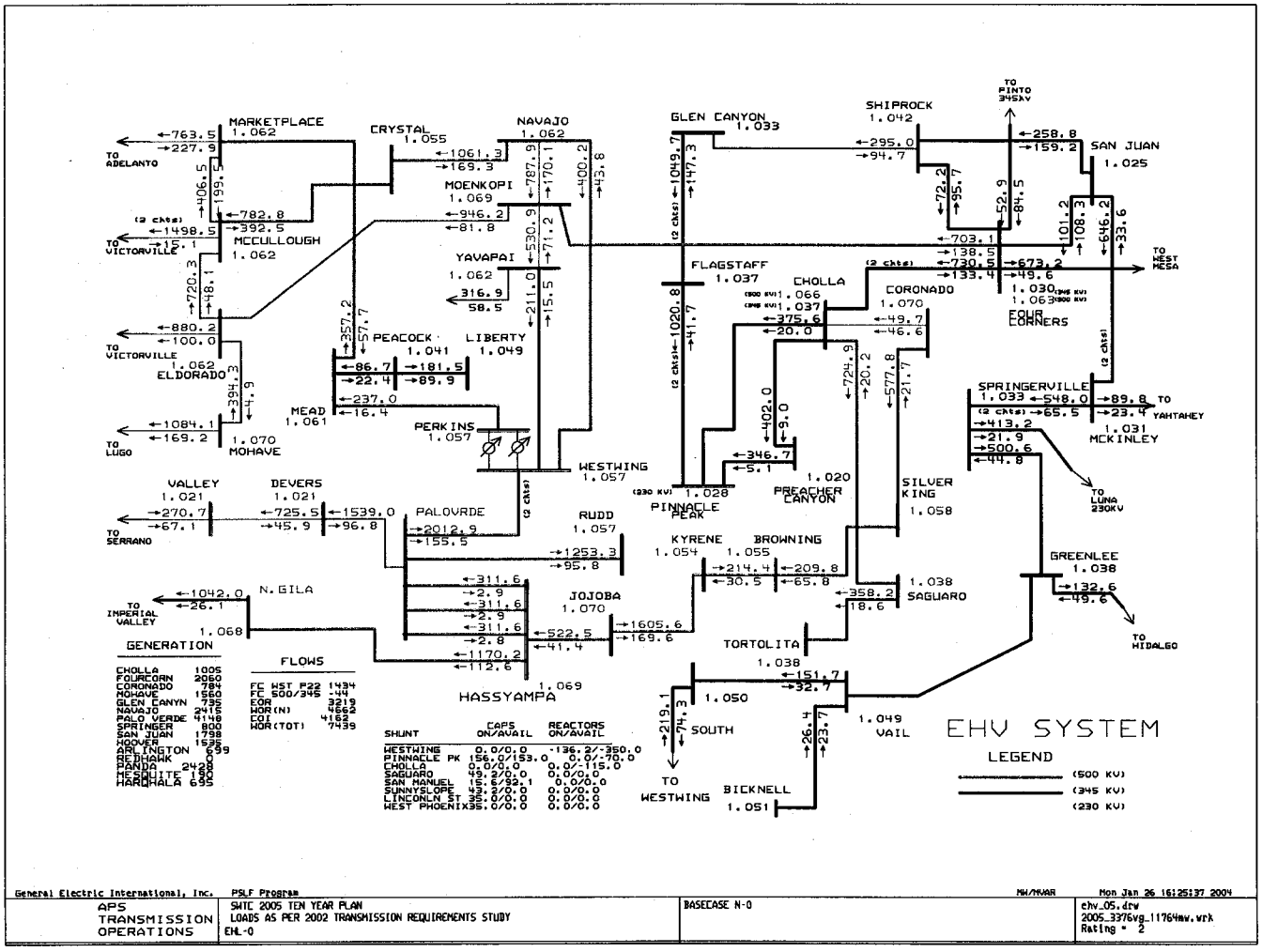
MARKETPLACE 1.062
CRYSTAL 1.055
NAVAJO 1.062
GLEN CANYON 1.033
SHIPROCK 1.042
SAN JUAN 1.025
MOENKOPI 1.069
MCCULLOUGH 1.062
YAVAPAI 1.062
FLAGSTAFF 1.037
CHOLLA 1.066
CORONADO 1.070
FOUR CORNERS
PEACOCK 1.041
LIBERTY 1.049
ELDORADO 1.062
MEAD 1.061
PERKINS 1.057
MOHAVE 1.070
WESTWING 1.057
PINNACLE PEAK 1.028
PREACHER CANYON 1.020
SILVER KING 1.058
SPRINGERVILLE 1.033
MCKINLEY 1.031
VALLEY 1.021
DEVERS 1.021
PALOVRDE
RUDD 1.057
KYRENE 1.054
BROWNING 1.055
GREENLEE 1.038
SAGUARO 1.038
N. GILA 1.068
JOJOBA 1.070
TORTOLITA 1.038
HASSYAMPA 1.069
SOUTH 1.050
VAIL 1.049
BICKNELL 1.051
TO ADELANTO
TO VICTORVILLE
TO LUGO
TO SERRANO
TO IMPERIAL VALLEY
TO PINTO 345kV
TO WEST MESA
TO YAHTAHEY
TO LUNA 230KV
TO HIDALGO
TO WESTWING
GENERATION
CHOLLA 1005
FOURCORN 2060
CORONADO 784
MOHAVE 1560
GLEN CANYN 735
NAVAJO 2415
PALO VERDE 4148
SPRINGER 800
SAN JUAN 1798
HOOVER 1535
ARLINGTON 699
REDHAWK 0
PANDA 2428
MESQUITE 150
HARQUAHALA 695
FLOWS
FC WST P22 1434
FC 500/345 -44
EOR 3219
WOR(N) 4862
COI 4162
WOR(TOT) 7439
SHUNT CAPS ON/AVAIL REACTORS ON/AVAIL
WESTWING 0.0/0.0 -136.2/-350.0
PINNACLE PK 156.0/153.0 0.0/-70.0
CHOLLA 0.0/0.0 0.0/-115.0
SAGUARO 49.2/0.0 0.0/0.0
SAN MANUEL 15.6/92.1 0.0/0.0
SUNNYSLOPE 43.2/0.0 0.0/0.0
LINCOLN ST 95.0/0.0 0.0/0.0
WEST PHOENIX 35.0/0.0 0.0/0.0
EHV SYSTEM
LEGEND
(500 KV)
(345 KV)
(230 KV)
General Electric International, Inc.
PSLF Program
MW/MVAR
Mon Jan 26 16:25:37 2004
APS TRANSMISSION OPERATIONS
SWIC 2005 TEN YEAR PLAN
LOADS AS PER 2002 TRANSMISSION REQUIREMENTS STUDY
EHL-0
BASECASE N-0
ehv_05.drw
2005_3376vg_11764mw.wrk
Rating = 2

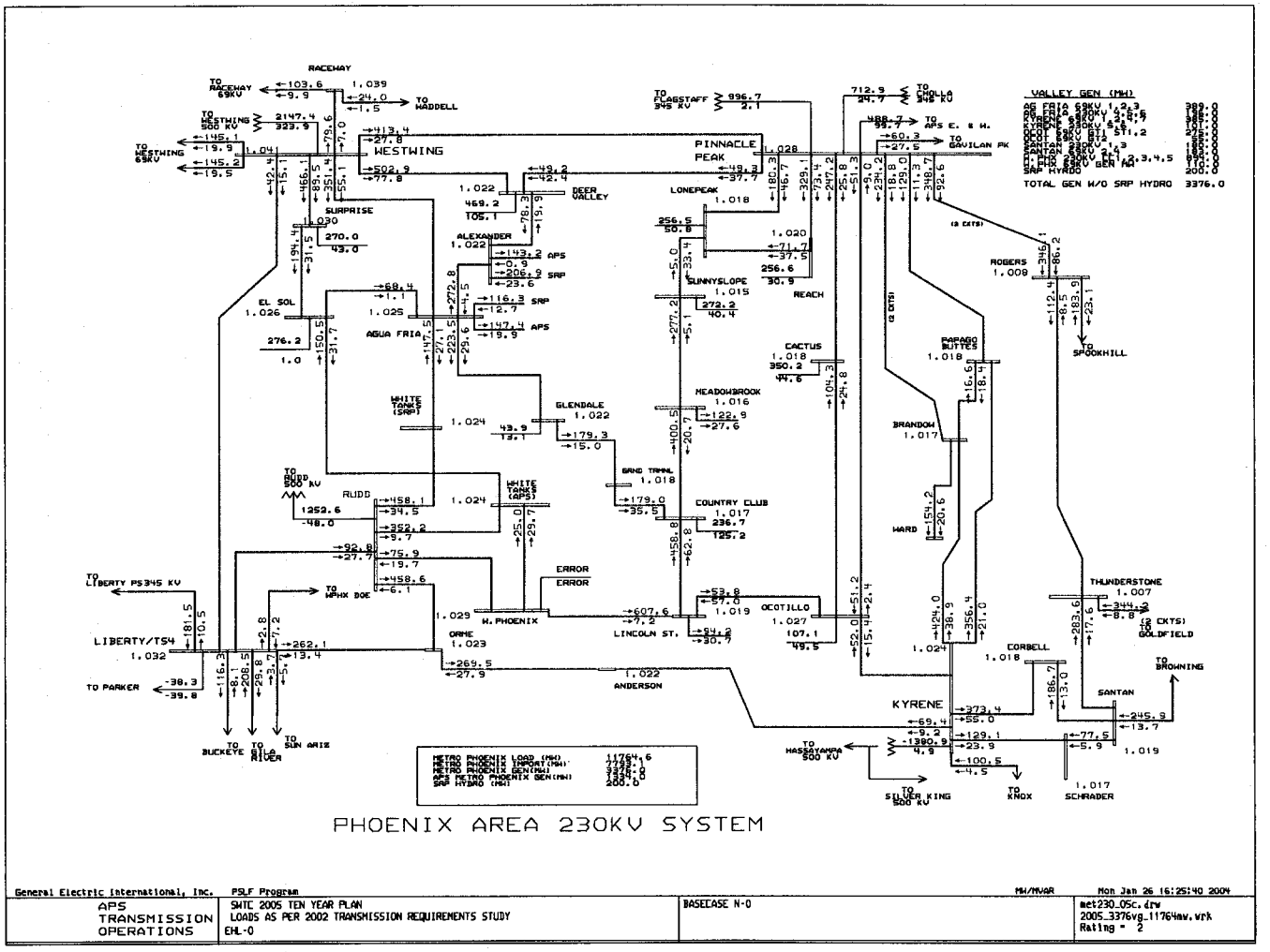
PHOENIX AREA 230KV SYSTEM
VALLEY GEN (MW)
TOTAL GEN W/O SRP HYDRO 3376.0
RACEWAY
WESTWING
PINNACLE PEAK
LONEPEAK
SURPRISE
ALEXANDER
DEER VALLEY
EL SOL
AGUA FRIA
SUNNYSLOPE
REACH
CACTUS
ROGERS
PAPAGO BUTTES
SPOOKHILL
MEADOWBROOK
GLENDALE
WHITE TANKS (SRP)
BRANDON
RUDD
WHITE TANKS (APS)
GRND TRMNL
COUNTRY CLUB
WARD
THUNDERSTONE
LIBERTY/TS4
W. PHOENIX
ORME
LINCOLN ST.
OCOTILLO
CORBELL
ANDERSON
KYRENE
SANTAN
SCHRADER
TO PARKER
TO BUCKEYE
TO GILA RIVER
TO SUN ARIZ
TO HASSAYAMPA 500 KV
TO SILVER KING 500 KV
TO KNOX
TO BROWNING
TO GOLDFIELD
TO LIBERTY PS345 KV
TO WPHX DOE
TO RUDD 500 KV
TO WESTWING 500 KV
TO WESTWING 69KV
TO RACEWAY 69KV
TO WADDELL
TO FLAGSTAFF 345 KV
TO CHOLLA 345 KV
TO APS E. & W.
TO GAVILAN PK
METRO PHOENIX LOAD (MW) 11764.6
METRO PHOENIX IMPORT(MW) 7793.1
METRO PHOENIX GEN(MW) 3376.0
APS METRO PHOENIX GEN(MW) 1334.0
SRP HYDRO (MW) 200.0
General Electric International, Inc.
PSLF Program
MW/MVAR
Mon Jan 26 16:25:40 2004
APS TRANSMISSION OPERATIONS
SWTC 2005 TEN YEAR PLAN
LOADS AS PER 2002 TRANSMISSION REQUIREMENTS STUDY
EHL-0
BASECASE N-0
met230_05c.drw
2005_3376vg_11764mw.wrk
Rating = 2

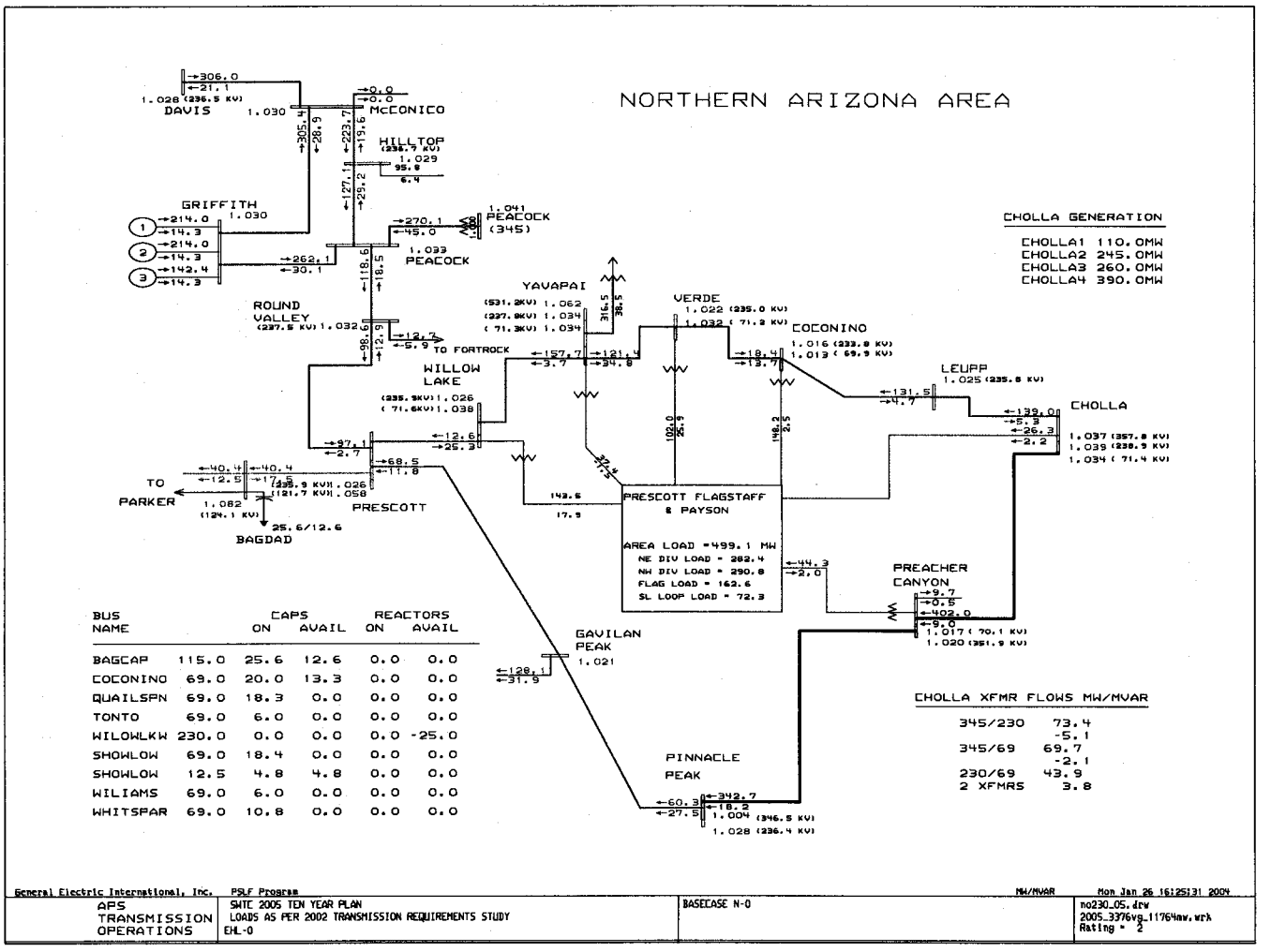

BUS NAME		CAPS ON	CAPS AVAIL	REACTORS ON	REACTORS AVAIL
BAGCAP	115.0	25.6	12.6	0.0	0.0
COCONINO	69.0	20.0	13.3	0.0	0.0
QUAILSPN	69.0	18.3	0.0	0.0	0.0
TONTO	69.0	6.0	0.0	0.0	0.0
WILOWLKW	230.0	0.0	0.0	0.0	-25.0
SHOWLOW	69.0	18.4	0.0	0.0	0.0
SHOWLOW	12.5	4.8	4.8	0.0	0.0
WILIAMS	69.0	6.0	0.0	0.0	0.0
WHITSPAR	69.0	10.8	0.0	0.0	0.0

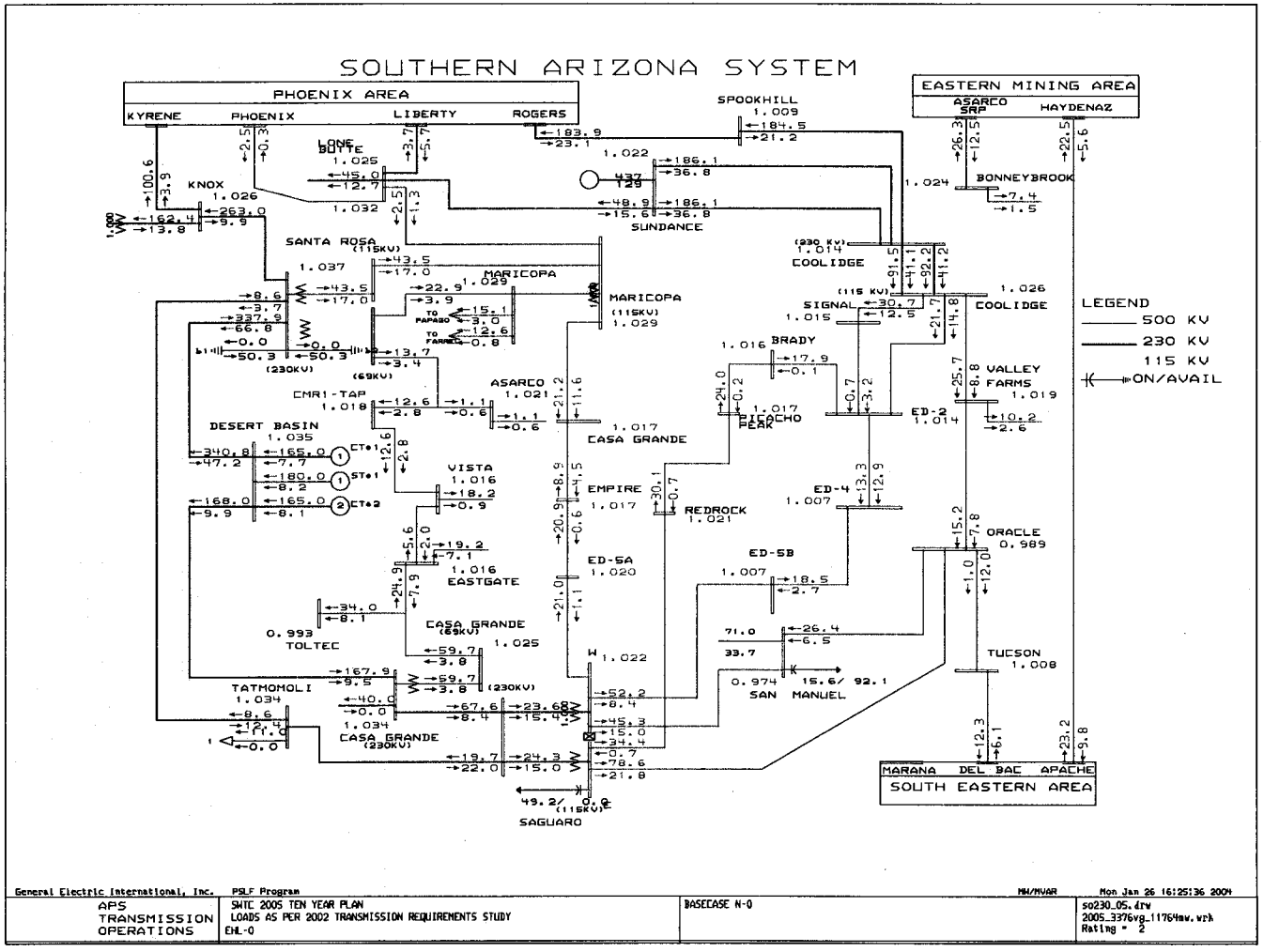
SOUTHERN ARIZONA SYSTEM
PHOENIX AREA
KYRENE
PHOENIX
LIBERTY
ROGERS
EASTERN MINING AREA
ASARCO SRP
HAYDENAZ
SPOOKHILL
LONE BUTTE
KNOX
SANTA ROSA
MARICOPA
SUNDANCE
COOLIDGE
BONNEYBROOK
SIGNAL
BRADY
VALLEY FARMS
PICACHO PEAK
ED-2
CMR1-TAP
ASARCO
DESERT BASIN
CASA GRANDE
VISTA
EMPIRE
REDROCK
ED-4
ORACLE
EASTGATE
ED-5A
ED-5B
TOLTEC
TUCSON
TATMOMOLI
SAN MANUEL
SAGUARO
MARANA
DEL BAC
APACHE
SOUTH EASTERN AREA
LEGEND
500 KV
230 KV
115 KV
ON/AVAIL
General Electric International, Inc.
PSLF Program
MW/MVAR
Mon Jan 26 16:25:36 2004
APS TRANSMISSION OPERATIONS
SWTC 2005 TEN YEAR PLAN
LOADS AS PER 2002 TRANSMISSION REQUIREMENTS STUDY
EHL-0
BASECASE N-0
so230_05.drw
2005_3376vg_1176tmw.wrk
Rating = 2

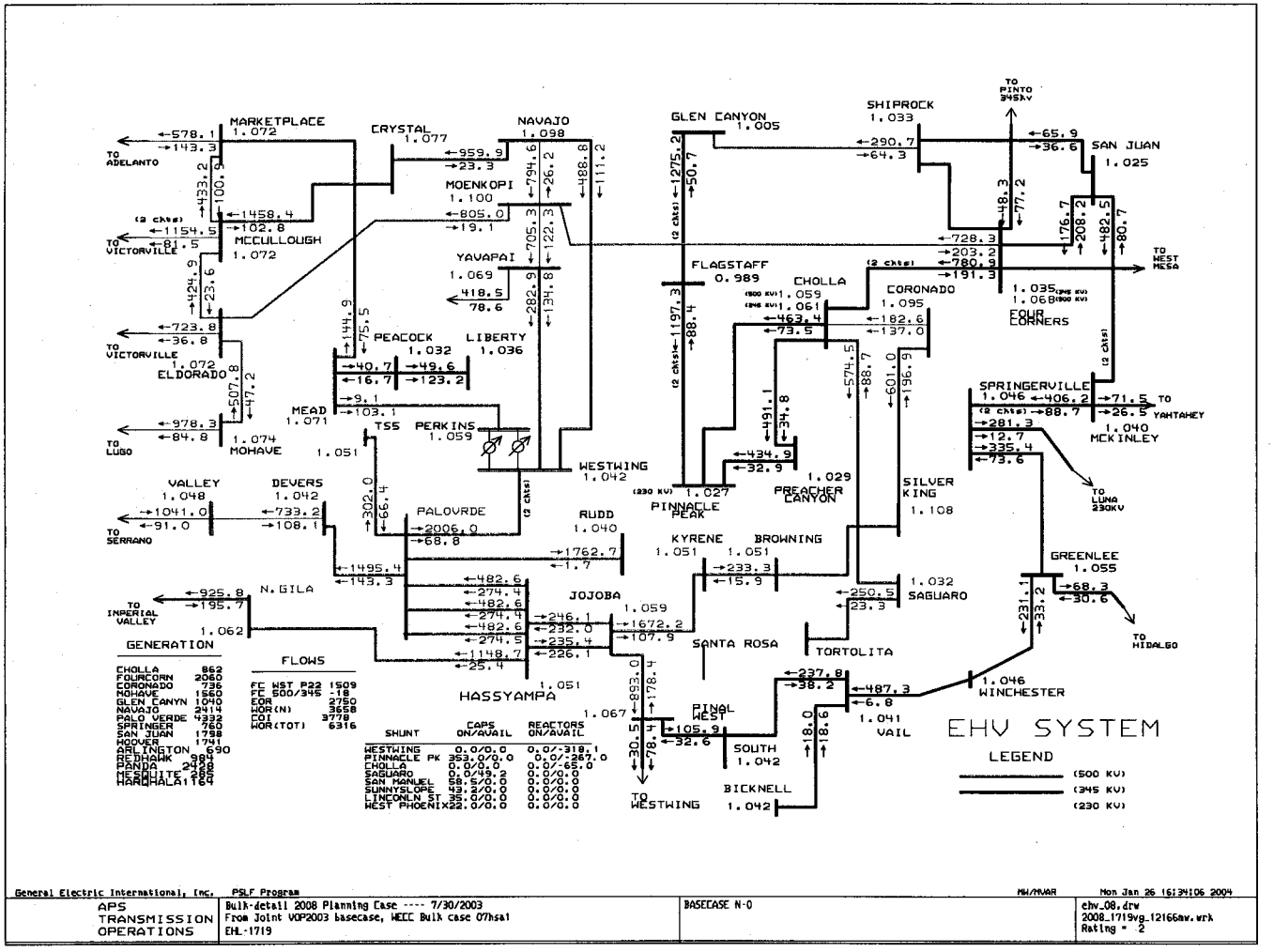
MARKETPLACE 1.072
CRYSTAL 1.077
NAVAJO 1.098
GLEN CANYON 1.005
SHIPROCK 1.033
SAN JUAN 1.025
TO PINTO 345kV
TO ADELANTO
MOENKOPI 1.100
MCCULLOUGH 1.072
TO VICTORVILLE
YAVAPAI 1.069
FLAGSTAFF 0.989
CHOLLA 1.059
CORONADO 1.095
FOUR CORNERS
TO WEST MESA
PEACOCK 1.032
LIBERTY 1.036
ELDORADO 1.072
MEAD 1.071
TSS
PERKINS 1.059
MOHAVE 1.074
TO LUGO
WESTWING 1.042
SPRINGERVILLE 1.046
TO YAHTAHEY
MCKINLEY 1.040
VALLEY 1.048
DEVERS 1.042
TO SERRANO
PALOVRDE
RUDD 1.040
PINNACLE PEAK 1.027
PREACHER CANYON 1.029
SILVER KING 1.108
KYRENE 1.051
BROWNING 1.051
TO LUNA 230KV
GREENLEE 1.055
TO HIDALGO
N. GILA 1.062
TO IMPERIAL VALLEY
JOJOBA 1.059
SAGUARO 1.032
SANTA ROSA
TORTOLITA
HASSYAMPA 1.051
PINAL WEST 1.067
SOUTH 1.042
BICKNELL 1.042
TO WESTWING
VAIL 1.041
WINCHESTER 1.046
EHV SYSTEM
LEGEND
(500 KV)
(345 KV)
(230 KV)
GENERATION
CHOLLA 862
FOURCORN 2060
CORONADO 736
MOHAVE 1560
GLEN CANYN 1040
NAVAJO 2414
PALO VERDE 4332
SPRINGER 760
SAN JUAN 1758
HOOVER 1741
ARLINGTON 690
REDHAWK 984
PANDA 2400
MESQUITE 2865
HARCHALA 1764
FLOWS
FC WST P22 1509
FC 500/345 -18
EOR 2750
WOR(N) 3658
COI 3778
WOR(TOT) 6316
SHUNT CAPS ON/AVAIL REACTORS ON/AVAIL
WESTWING 0.0/0.0 0.0/-318.1
PINNACLE PK 353.0/0.0 0.0/-267.0
CHOLLA 0.0/0.0 0.0/-65.0
SAGUARO 0.0/49.2 0.0/0.0
SAN MANUEL 58.5/0.0 0.0/0.0
SUNNYSLOPE 43.2/0.0 0.0/0.0
LINCOLN ST 35.0/0.0 0.0/0.0
WEST PHOENIX 22.0/0.0 0.0/0.0
General Electric International, Inc.
PSLF Program
MW/MVAR
Mon Jan 26 16:34:06 2004
APS TRANSMISSION OPERATIONS
Bulk-detail 2008 Planning Case ---- 7/30/2003
From Joint WOP2003 basecase, WECC Bulk case 07hsa1
EHL-1719
BASECASE N-0
ehv_08.drw
2008_1719vg_12166aw.wrk
Rating = 2

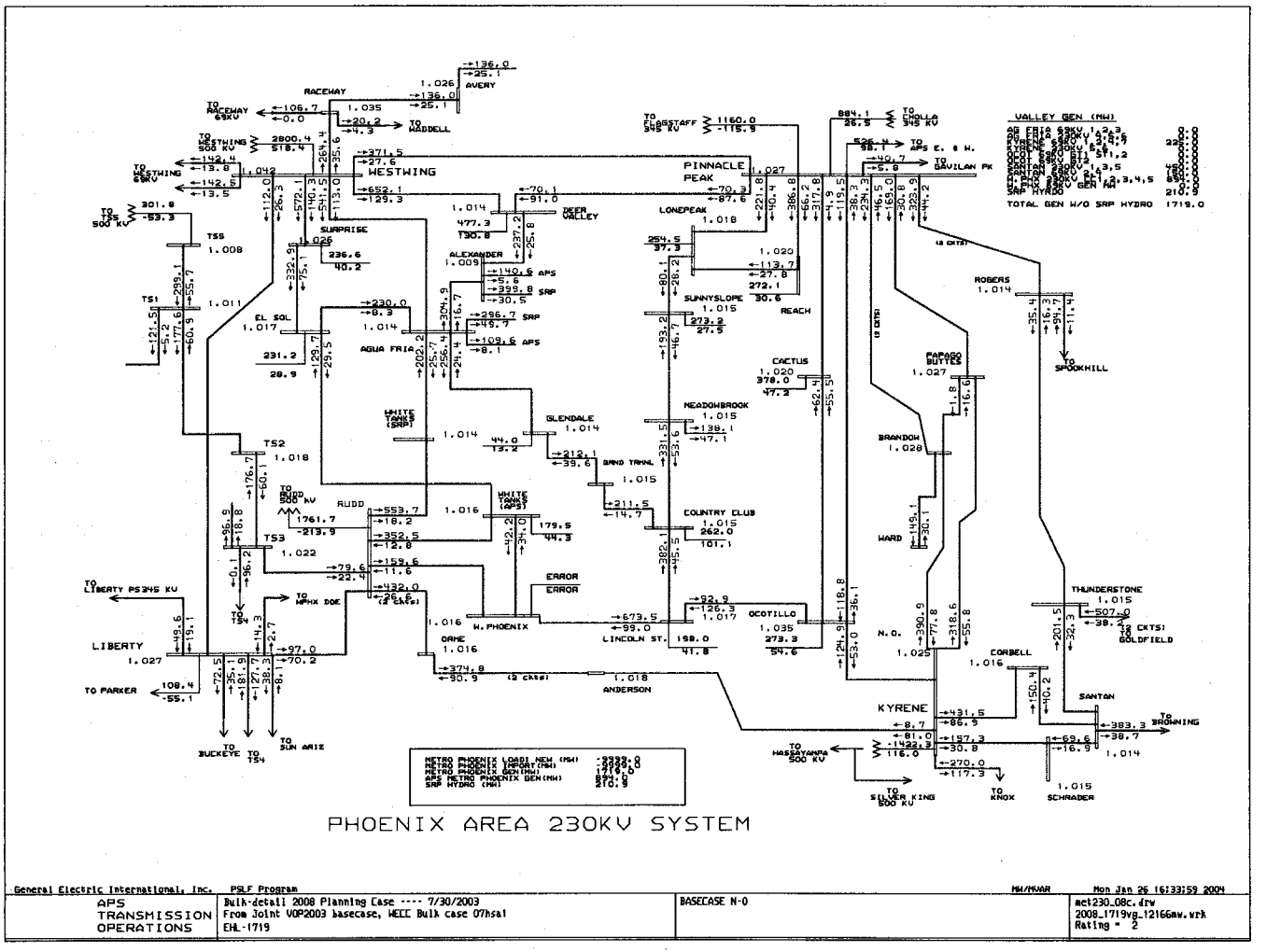
PHOENIX AREA 230KV SYSTEM
General Electric International, Inc.
PSLF Program
MW/MVAR
Mon Jan 26 16:33:59 2004
APS TRANSMISSION OPERATIONS
Bulk-detail 2008 Planning Case ---- 7/30/2003
From Joint VOP2003 basecase, WECC Bulk case 07hsa1
EHL-1719
BASECASE N-0
met230_08c.drw
2008_1719vg_12166mw.wrk
Rating = 2
VALLEY GEN (MW)
TOTAL GEN W/O SRP HYDRO 1719.0
RACEWAY
AVERY
WESTWING
PINNACLE PEAK
LONEPEAK
SUNNYSLOPE
REACH
CACTUS
MEADOWBROOK
COUNTRY CLUB
OCOTILLO
LINCOLN ST.
ANDERSON
W. PHOENIX
ORME
RUDD
GLENDALE
AGUA FRIA
EL SOL
SURPRISE
ALEXANDER
DEER VALLEY
LIBERTY
KYRENE
SANTAN
CORBELL
N.O.
THUNDERSTONE
BRANDON
WARD
ROBERS
SCHRADER
TO SPOOKHILL
TO GOLDFIELD
TO BROWNING
TO KNOX
TO SILVER KING 500 KV
TO HASSAYAMPA 500 KV
TO PARKER
TO BUCKEYE
TO SUN ARIZ
TO LIBERTY PS345 KV
TO WPHX DOE
TO RUDD 500 KV
TO WESTWING 500 KV
TO WESTWING 69KV
TO RACEWAY 69KV
TO WADDELL
TO FLAGSTAFF 345 KV
TO CHOLLA 345 KV
TO APS E. & W.
TO GAVILAN PK
TO TSS 500 KV
TS1
TS2
TS3
TS4
TS5
METRO PHOENIX LOADI NEW (MW) -9999.0
METRO PHOENIX IMPORT(MW) -9999.0
METRO PHOENIX GEN(MW) 1719.0
APS METRO PHOENIX GEN(MW) 894.0
SRP HYDRO (MW) 210.9

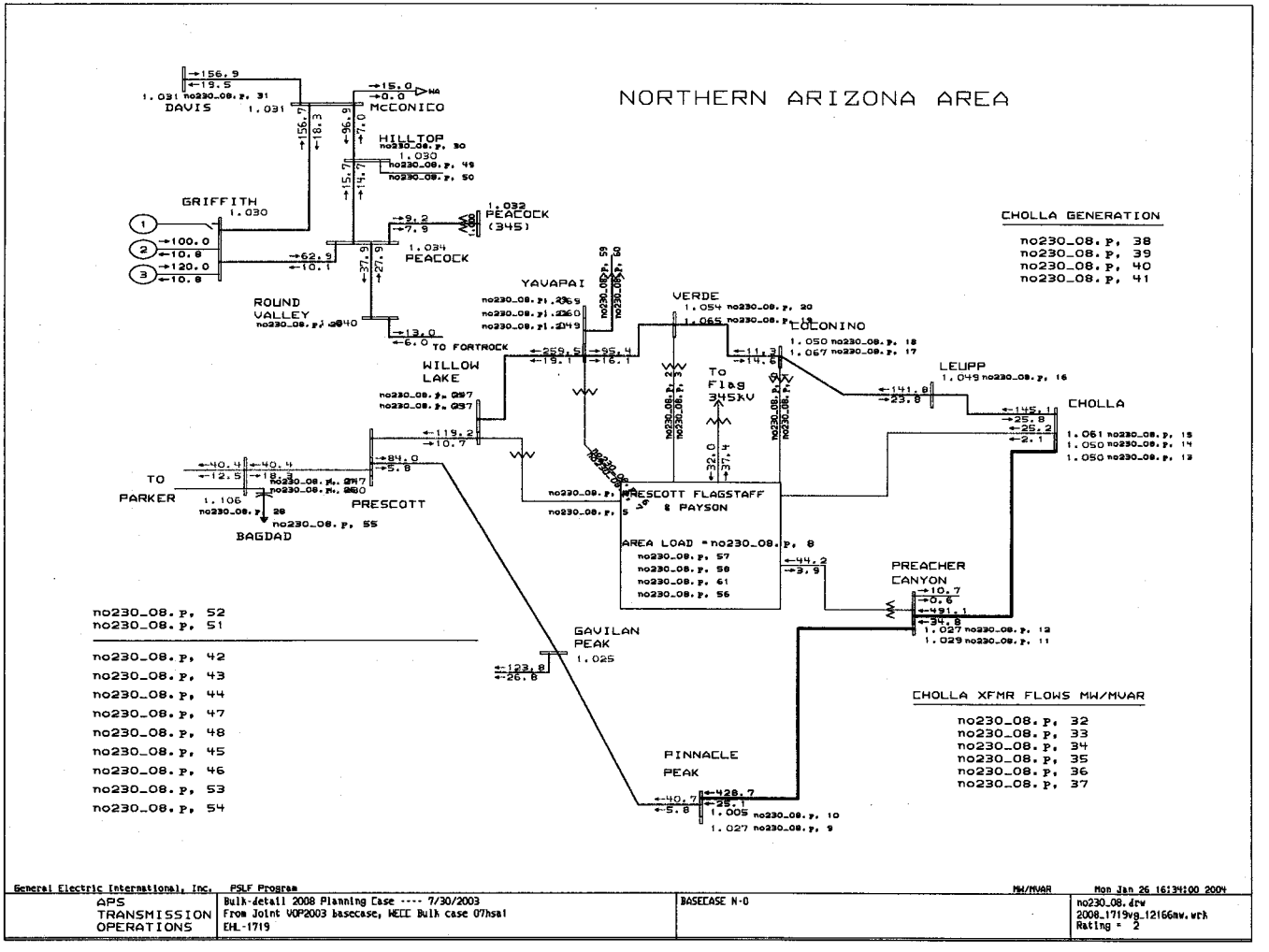
NORTHERN ARIZONA AREA
DAVIS
MCCONICO
HILLTOP
GRIFFITH
PEACOCK (345)
PEACOCK
ROUND VALLEY
YAVAPAI
VERDE
LOCONINO
TO FORTROCK
WILLOW LAKE
TO Flag 345kV
LEUPP
CHOLLA
TO PARKER
BAGDAD
PRESCOTT
PRESCOTT FLAGSTAFF & PAYSON
AREA LOAD = no230_08. p, 8
no230_08. p, 57
no230_08. p, 58
no230_08. p, 61
no230_08. p, 56
PREACHER CANYON
GAVILAN PEAK
PINNACLE PEAK
CHOLLA GENERATION
no230_08. p, 38
no230_08. p, 39
no230_08. p, 40
no230_08. p, 41
no230_08. p, 52
no230_08. p, 51
no230_08. p, 42
no230_08. p, 43
no230_08. p, 44
no230_08. p, 47
no230_08. p, 48
no230_08. p, 45
no230_08. p, 46
no230_08. p, 53
no230_08. p, 54
CHOLLA XFMR FLOWS MW/MVAR
no230_08. p, 32
no230_08. p, 33
no230_08. p, 34
no230_08. p, 35
no230_08. p, 36
no230_08. p, 37
General Electric International, Inc.
PSLF Program
MW/MVAR
Mon Jan 26 16:34:00 2004
APS TRANSMISSION OPERATIONS
Bulk-detail 2008 Planning Case ---- 7/30/2003
From Joint WOP2003 basecase, WECC Bulk case 07hsal
EHL-1719
BASECASE N-0
no230_08.drw
2008_1719vg_12166mw.wrk
Rating = 2

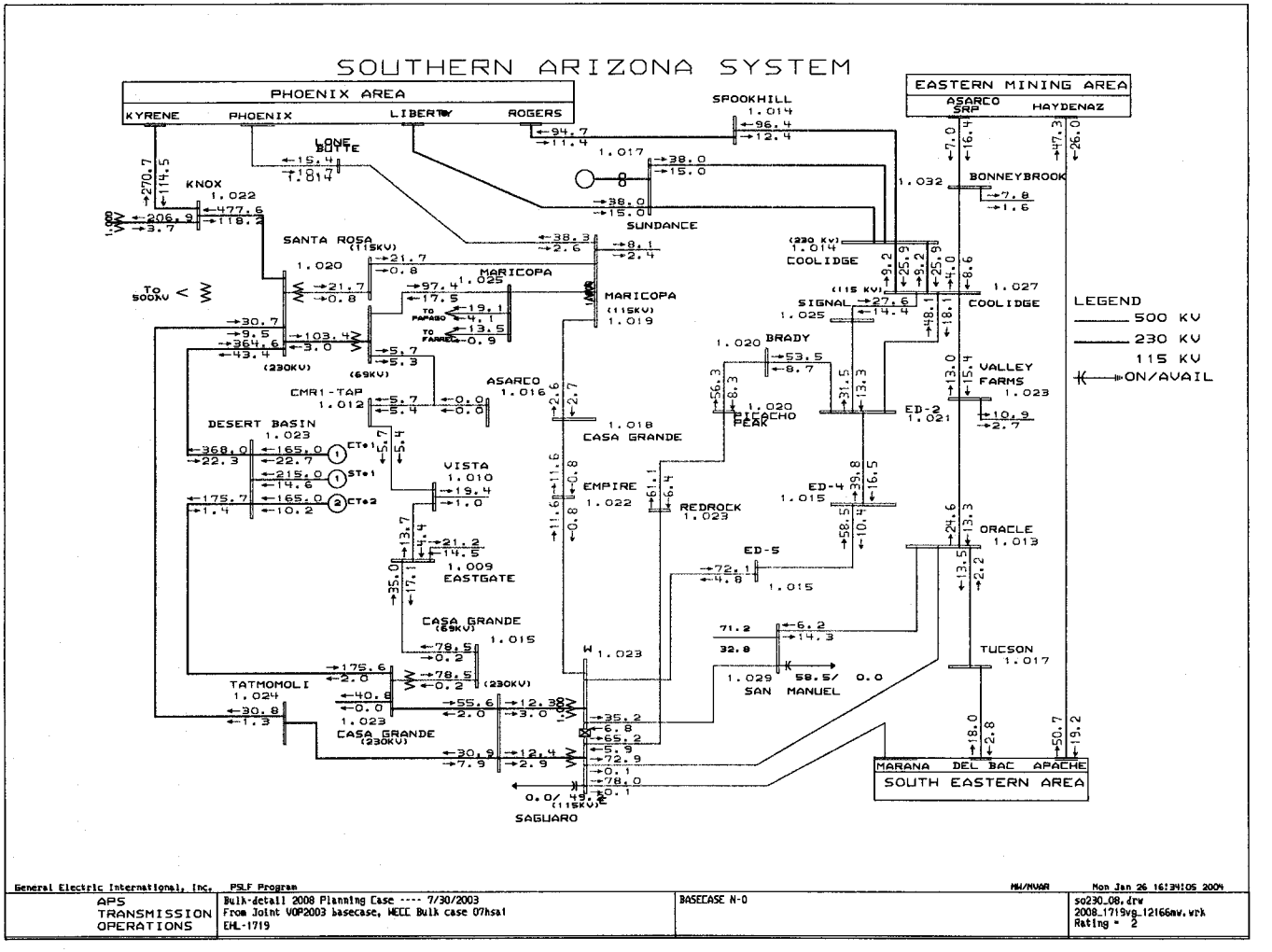
SOUTHERN ARIZONA SYSTEM
PHOENIX AREA
KYRENE
PHOENIX
LIBERTY
ROGERS
EASTERN MINING AREA
ASARCO SRP
HAYDENAZ
SPOOKHILL
LONE BUTTE
KNOX
SUNDANCE
BONNEYBROOK
SANTA ROSA
MARICOPA
COOLIDGE
SIGNAL
BRADY
VALLEY FARMS
ASARCO
CMR1-TAP
DESERT BASIN
CASA GRANDE
PICACHO PEAK
ED-2
VISTA
EMPIRE
REDROCK
ED-4
ORACLE
EASTGATE
ED-5
TUCSON
TATMOMOLI
SAN MANUEL
SAGUARO
MARANA
DEL BAC
APACHE
SOUTH EASTERN AREA
LEGEND
500 KV
230 KV
115 KV
ON/AVAIL
General Electric International, Inc.
PSLF Program
Mon Jan 26 16:34:05 2004
APS TRANSMISSION OPERATIONS
Bulk-detail 2008 Planning Case ---- 7/30/2003
From Joint VOP2003 basecase, WECC Bulk case 07hsa1
EHL-1719
BASECASE N-0
so230_08.drw
2008_1719vg_12166mw.wrk
Rating = 2

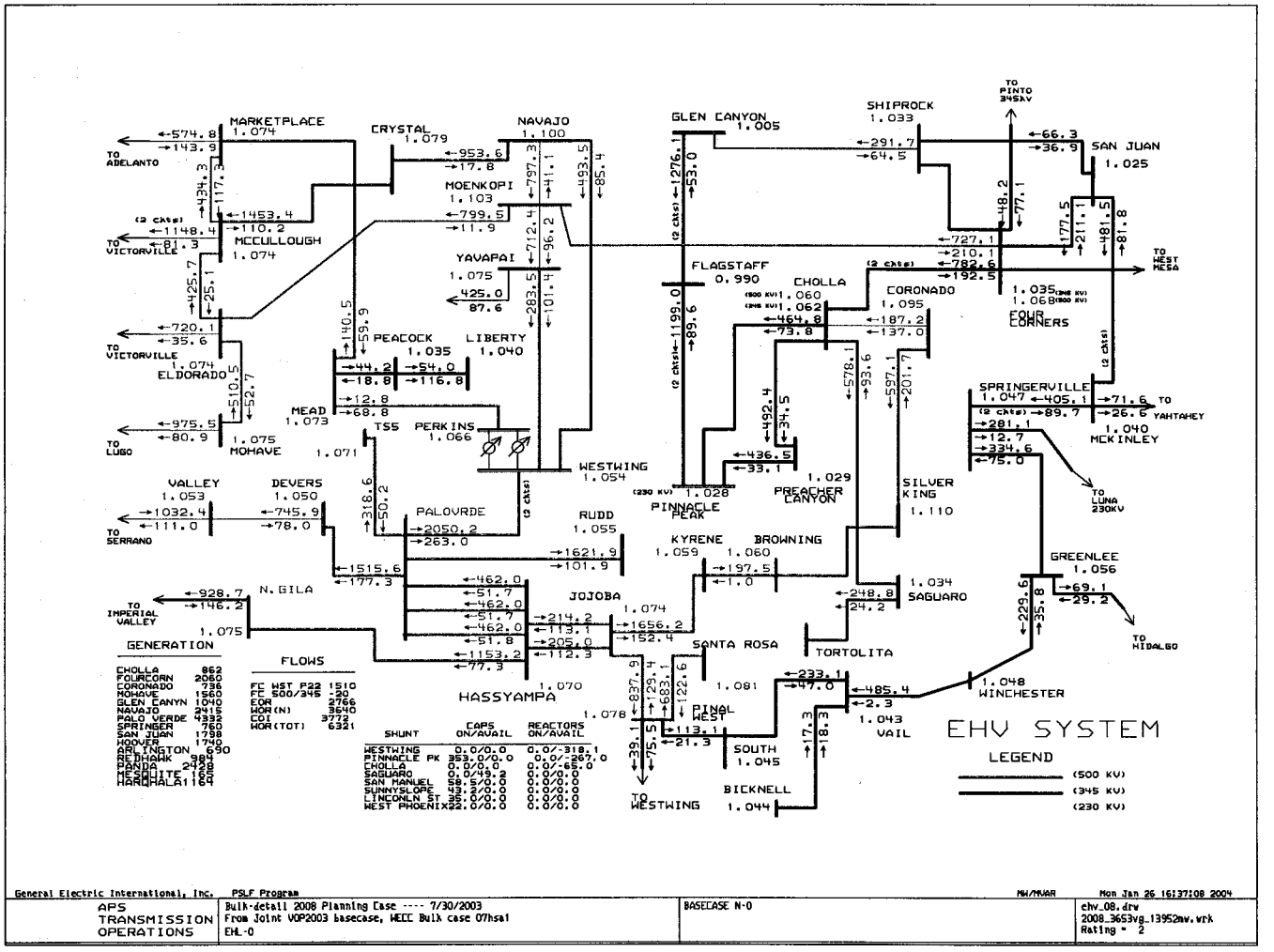
MARKETPLACE 1.074
CRYSTAL 1.079
NAVAJO 1.100
GLEN CANYON 1.005
SHIPROCK 1.033
SAN JUAN 1.025
MOENKOPI 1.103
MCCULLOUGH 1.074
YAVAPAI 1.075
FLAGSTAFF 0.990
CHOLLA 1.060
CORONADO 1.095
FOUR CORNERS
PEACOCK 1.035
LIBERTY 1.040
ELDORADO 1.074
MEAD 1.073
TS5 1.071
PERKINS 1.066
MOHAVE 1.075
WESTWING 1.054
PINNACLE PEAK 1.028
PREACHER CANYON 1.029
SILVER KING 1.110
SPRINGERVILLE 1.047
MCKINLEY 1.040
VALLEY 1.053
DEVERS 1.050
PALOVERDE
RUDD 1.055
KYRENE 1.059
BROWNING 1.060
GREENLEE 1.056
N. GILA 1.075
JOJOBA 1.074
SAGUARO 1.034
SANTA ROSA
TORTOLITA
HASSYAMPA 1.070
PINAL WEST 1.078
SOUTH 1.045
BICKNELL 1.044
VAIL 1.043
WINCHESTER 1.048
EHV SYSTEM
LEGEND
(500 KV)
(345 KV)
(230 KV)
GENERATION
FLOWS
SHUNT CAPS ON/AVAIL REACTORS ON/AVAIL
General Electric International, Inc. PSLF Program
APS TRANSMISSION OPERATIONS
Bulk-detail 2008 Planning Case ---- 7/30/2003
From Joint WOP2003 basecase, WECC Bulk case 07hsa1
EHL-0
BASECASE N-0
Mon Jan 26 16:37:08 2004
chv_08.drw
2008_3653vg_13952mw.wrk
Rating = 2

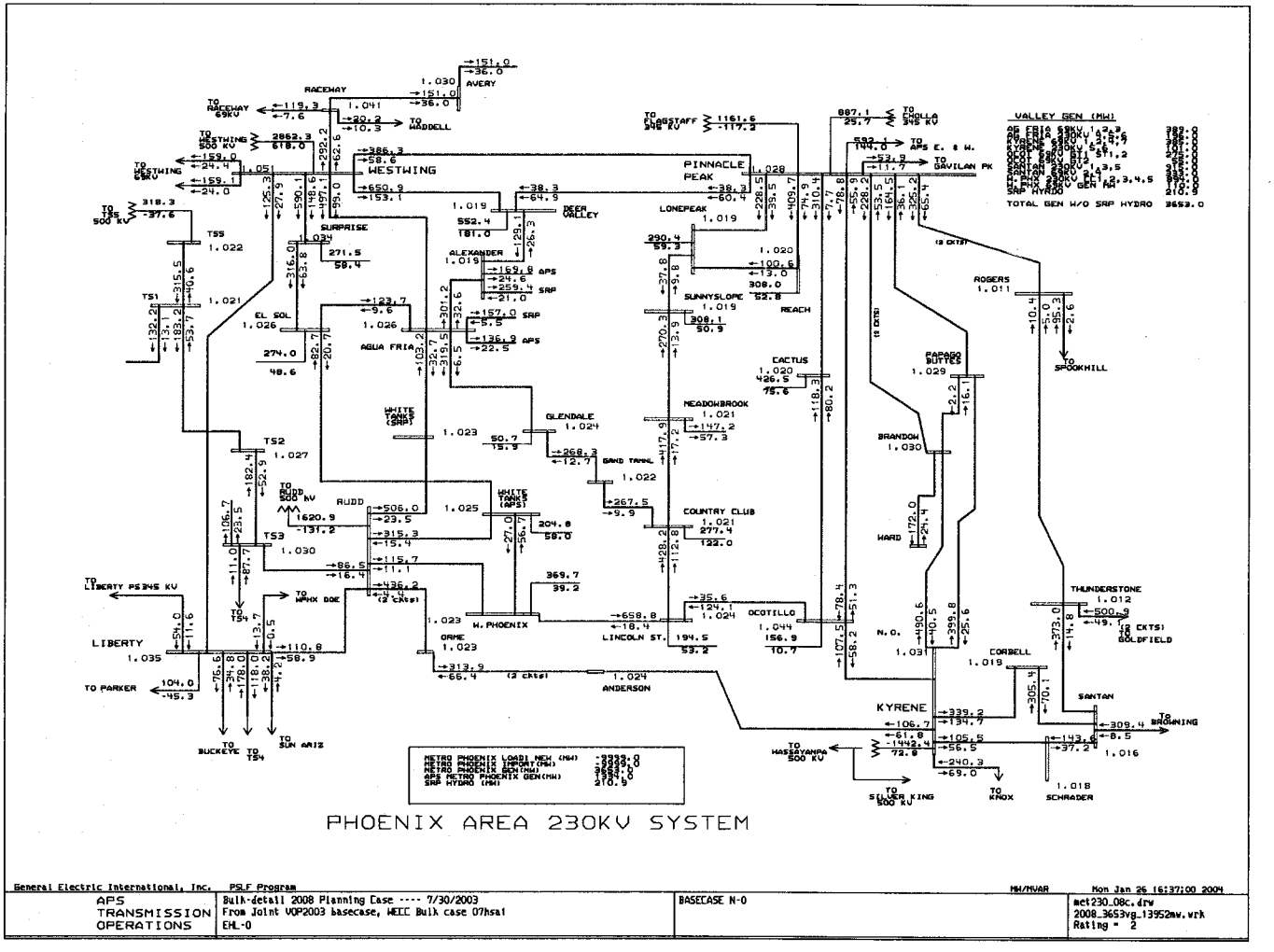
PHOENIX AREA 230KV SYSTEM
General Electric International, Inc.
PSLF Program
MW/MVAR
Mon Jan 26 16:37:00 2004
APS TRANSMISSION OPERATIONS
Bulk-detail 2008 Planning Case ---- 7/30/2003
From Joint VOP2003 basecase, WECC Bulk case 07hsa1
EHL-0
BASECASE N-0
met230_08c.drw
2008_3653vg_13952mw.wrk
Rating = 2
VALLEY GEN (MW)
TOTAL GEN W/O SRP HYDRO 3653.0
WESTWING
PINNACLE PEAK
LONEPEAK
SUNNYSLOPE
REACH
CACTUS
MEADOWBROOK
COUNTRY CLUB
OCOTILLO
LINCOLN ST.
W. PHOENIX
ORME
ANDERSON
KYRENE
SANTAN
CORBELL
N.O.
WARD
BRANDON
PAPAGO BUTTES
ROGERS
THUNDERSTONE
SCHRADER
LIBERTY
RUDD
GLENDALE
WHITE TANKS (SRP)
AGUA FRIA
EL SOL
SURPRISE
ALEXANDER
DEER VALLEY
AVERY
RACEWAY
TO WADDELL
TO GAVILAN PK
TO SPOOKHILL
TO BROWNING
TO KNOX
TO SILVER KING 500 KV
TO HASSAYAMPA 500 KV
TO BUCKEYE
TO SUN ARIZ
TO PARKER
TO LIBERTY PS345 KV
TO WPHX DOE
TO RUDD 500 KV
TO WESTWING 500 KV
TO WESTWING 69KV
TO RACEWAY 69KV
TO FLAGSTAFF 345 KV
TO CHOLLA 345 KV
TO APS E. & W.
TO SUN ARIZ
METRO PHOENIX LOAD1 NEW (MW) -9999.0
METRO PHOENIX IMPORT(MW) -9999.0
METRO PHOENIX GEN(MW) 3653.0
APS METRO PHOENIX GEN(MW) 1394.0
SRP HYDRO (MW) 210.9

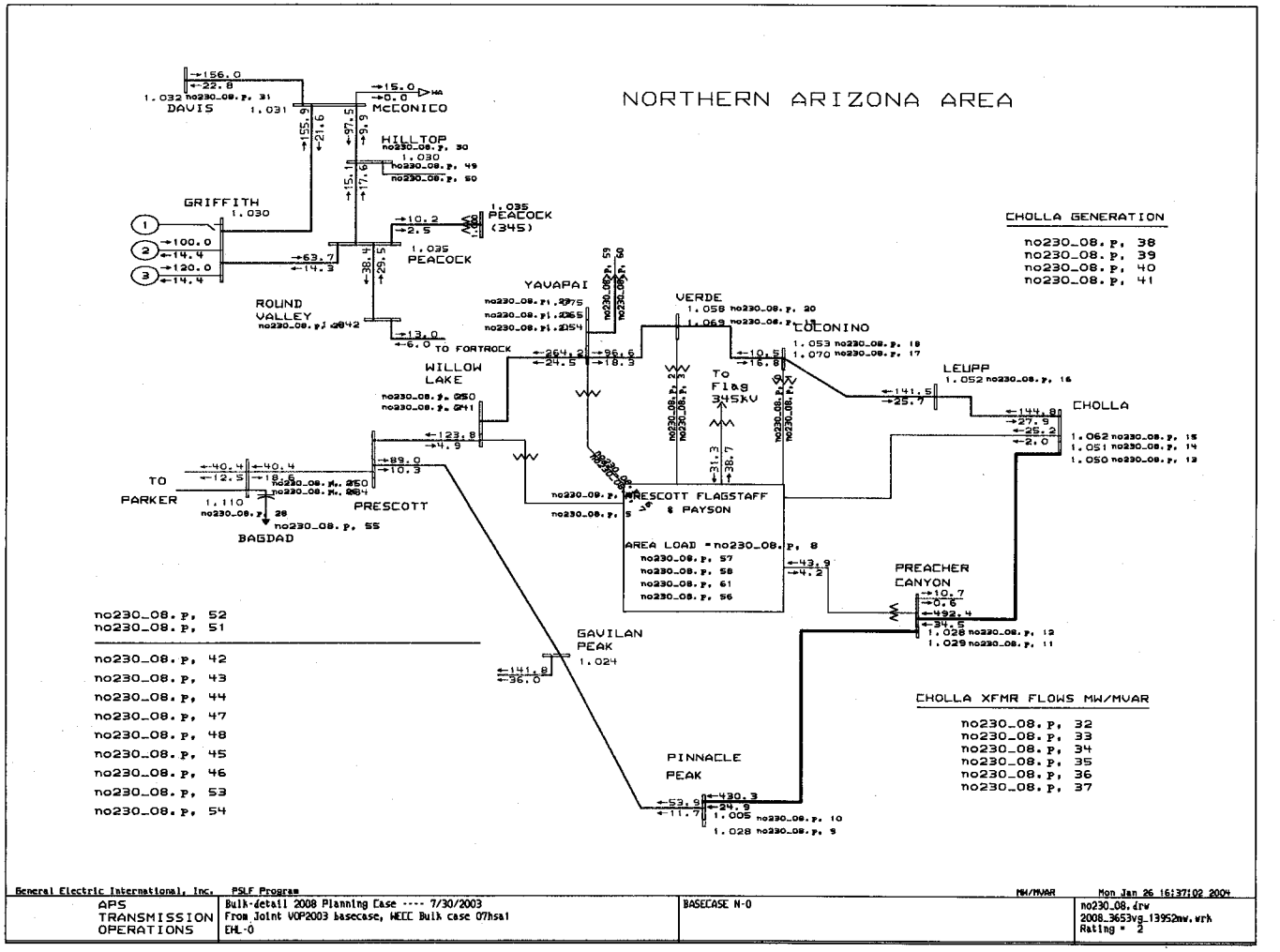
NORTHERN ARIZONA AREA
DAVIS
MCCONICO
HILLTOP
GRIFFITH
PEACOCK (345)
PEACOCK
ROUND VALLEY
YAVAPAI
VERDE
COCONINO
TO FORTROCK
WILLOW LAKE
TO Flag 345kv
LEUPP
CHOLLA
TO PARKER
BAGDAD
PRESCOTT
PRESCOTT FLAGSTAFF & PAYSON
AREA LOAD =no230_08.p, 8
no230_08.p, 57
no230_08.p, 58
no230_08.p, 61
no230_08.p, 56
PREACHER CANYON
GAVILAN PEAK
PINNACLE PEAK
CHOLLA GENERATION
no230_08.p, 38
no230_08.p, 39
no230_08.p, 40
no230_08.p, 41
no230_08.p, 52
no230_08.p, 51
no230_08.p, 42
no230_08.p, 43
no230_08.p, 44
no230_08.p, 47
no230_08.p, 48
no230_08.p, 45
no230_08.p, 46
no230_08.p, 53
no230_08.p, 54
CHOLLA XFMR FLOWS MW/MVAR
no230_08.p, 32
no230_08.p, 33
no230_08.p, 34
no230_08.p, 35
no230_08.p, 36
no230_08.p, 37
General Electric International, Inc. PSLF Program
MW/MVAR
Mon Jan 26 16:37:02 2004
APS TRANSMISSION OPERATIONS
Bulk-detail 2008 Planning Case ---- 7/30/2003
From Joint VOP2003 basecase, WECC Bulk case 07hsal
EHL-0
BASECASE N-0
no230_08.drw
2008_3653vg_13952mw.wrk
Rating = 2

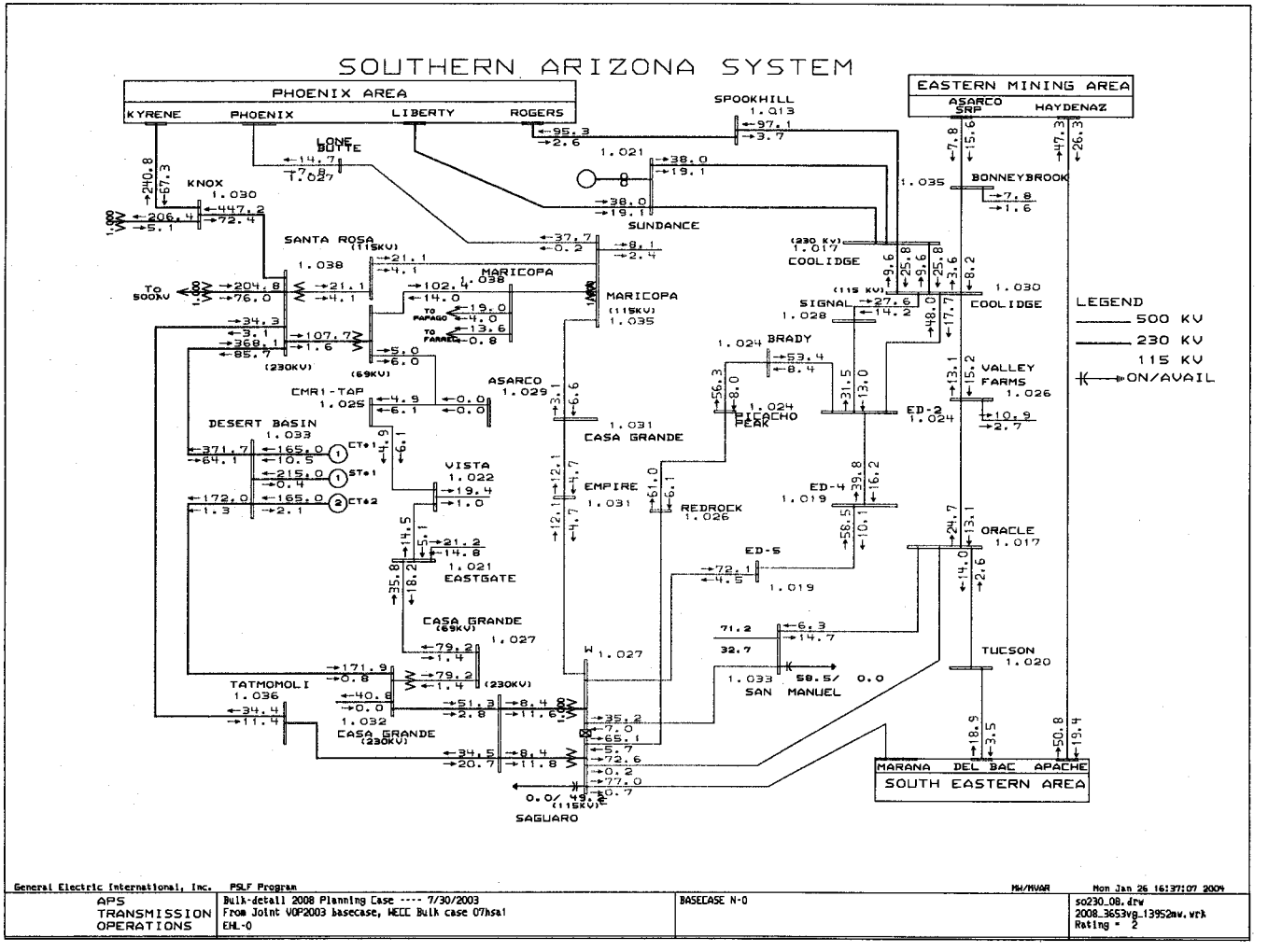
SOUTHERN ARIZONA SYSTEM
PHOENIX AREA
KYRENE
PHOENIX
LIBERTY
ROGERS
EASTERN MINING AREA
ASARCO SRP
HAYDENAZ
SPOOKHILL
1.013
LONE BUTTE
1.027
KNOX
1.030
SANTA ROSA (115KV)
1.038
MARICOPA
1.038
MARICOPA (115KV)
1.035
SUNDANCE
1.021
COOLIDGE (230 KV)
1.017
BONNEYBROOK
1.035
COOLIDGE (115 KV)
1.030
SIGNAL
1.028
BRADY
1.024
PICACHO PEAK
1.024
VALLEY FARMS
1.026
ED-9
1.024
ASARCO
1.029
CMR1-TAP
1.025
DESERT BASIN
1.033
CASA GRANDE
1.031
VISTA
1.022
EMPIRE
1.031
REDROCK
1.026
ED-4
1.019
ORACLE
1.017
ED-5
1.019
EASTGATE
1.021
CASA GRANDE (69KV)
1.027
TATMOMOLI
1.036
CASA GRANDE (230KV)
1.032
SAN MANUEL
1.033
TUCSON
1.020
SAGUARO
MARANA
DEL BAC
APACHE
SOUTH EASTERN AREA
LEGEND
500 KV
230 KV
115 KV
ON/AVAIL
General Electric International, Inc.
PSLF Program
MW/MVAR
Mon Jan 26 16:37:07 2004
APS TRANSMISSION OPERATIONS
Bulk-detail 2008 Planning Case ---- 7/30/2003
From Joint VOP2003 basecase, WECC Bulk case 07hsa1
EHL-0
BASECASE N-0
so230_08.drw
2008_3653vg_13952mw.wrk
Rating = 2

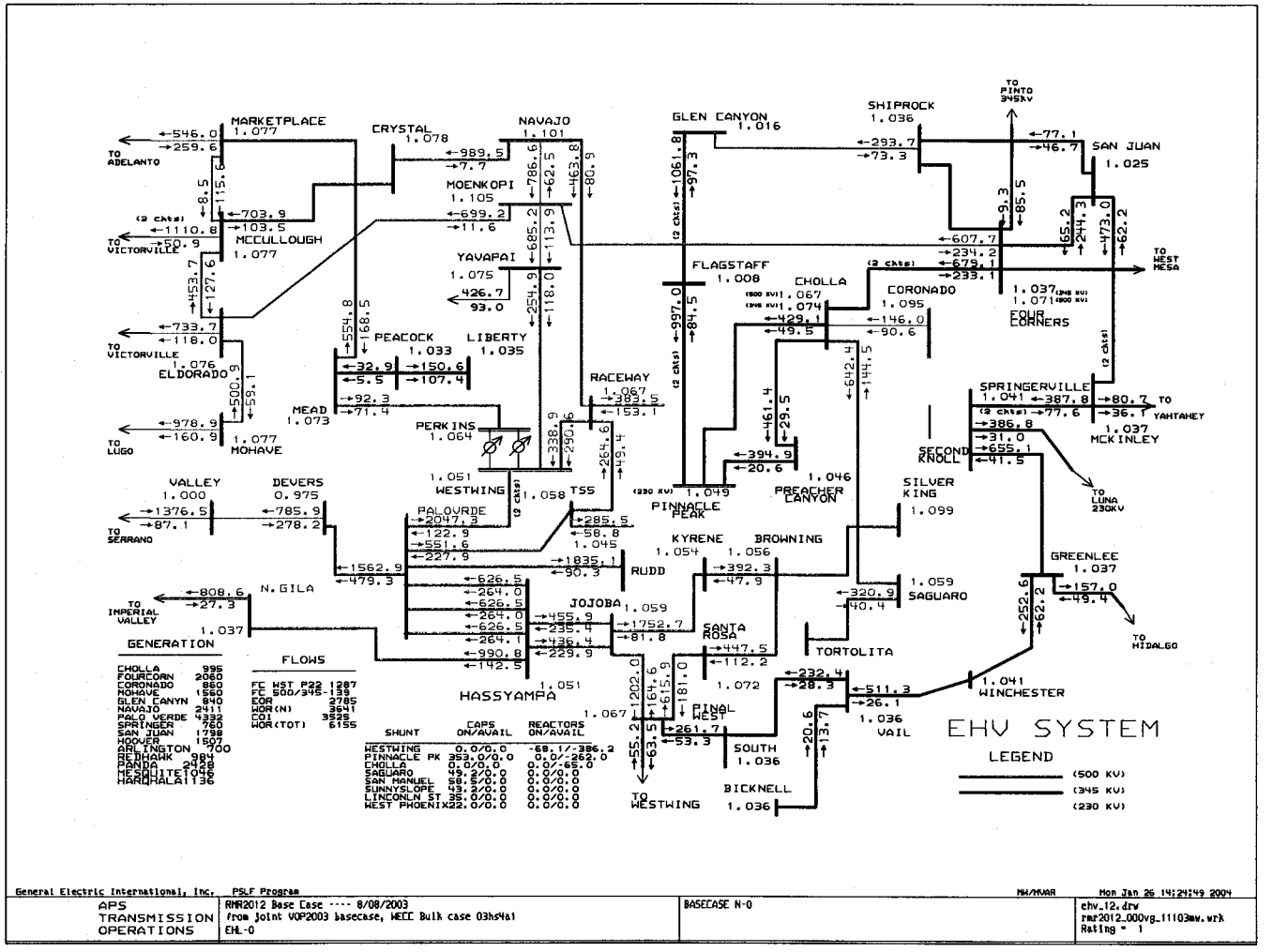
MARKETPLACE 1.077
CRYSTAL 1.078
NAVAJO 1.101
GLEN CANYON 1.016
SHIPROCK 1.036
SAN JUAN 1.025
MOENKOPI 1.105
MCCULLOUGH 1.077
YAVAPAI 1.075
FLAGSTAFF 1.008
CHOLLA 1.067 1.074
CORONADO 1.095
FOUR CORNERS 1.037 1.071
PEACOCK 1.033
LIBERTY 1.035
ELDORADO 1.076
MEAD 1.073
PERKINS 1.064
RACEWAY 1.067
SPRINGERVILLE 1.041
MCKINLEY 1.037
SECOND KNOLL
VALLEY 1.000
DEVERS 0.975
WESTWING 1.051
TSS 1.058
PALOVRDE
PINNACLE PEAK 1.049
PREACHER CANYON 1.046
SILVER KING 1.099
KYRENE 1.054
BROWNING 1.056
RUDD
GREENLEE 1.037
SAGUARO 1.059
N.GILA 1.037
JOJOBA 1.059
SANTA ROSA 1.072
TORTOLITA
WINCHESTER 1.041
HASSYAMPA 1.051
FINAL WEST 1.067
SOUTH 1.036
VAIL 1.036
BICKNELL 1.036
TO ADELANTO
TO VICTORVILLE
TO LUGO
TO SERRANO
TO IMPERIAL VALLEY
TO PINTO 345KV
TO WEST MESA
TO YAHTAHEY
TO LUNA 230KV
TO HIDALGO
TO WESTWING
GENERATION
CHOLLA 995
FOURCORN 2060
CORONADO 860
MOHAVE 1560
GLEN CANYN 840
NAVAJO 2411
PALO VERDE 4332
SPRINGER 760
SAN JUAN 1798
HOOVER 1507
ARLINGTON 700
REDHAWK 984
PANDA 2428
MESQUITE1046
HARQHALA1136
FLOWS
FC WST P22 1287
FC 500/345-139
EOR 2785
WOR(N) 3641
COI 3529
WOR(TOT) 6155
SHUNT CAPS ON/AVAIL REACTORS ON/AVAIL
WESTWING 0.0/0.0 -68.1/-386.2
PINNACLE PK 353.0/0.0 0.0/-262.0
CHOLLA 0.0/0.0 0.0/-65.0
SAGUARO 49.2/0.0 0.0/0.0
SAN MANUEL 58.5/0.0 0.0/0.0
SUNNYSLOPE 43.2/0.0 0.0/0.0
LINCONLN ST 35.0/0.0 0.0/0.0
WEST PHOENIX 22.0/0.0 0.0/0.0
EHV SYSTEM
LEGEND
(500 KV)
(345 KV)
(230 KV)
General Electric International, Inc. PSLF Program
MW/MVAR
Mon Jan 26 14:24:49 2004
APS TRANSMISSION OPERATIONS
RMR2012 Base Case ---- 8/08/2003
from Joint VOP2003 basecase, WECC Bulk case 03hs4ai
EHL-0
BASECASE N-0
chv_12.drw
rmr2012_000vg_11103mw.wrk
Rating = 1

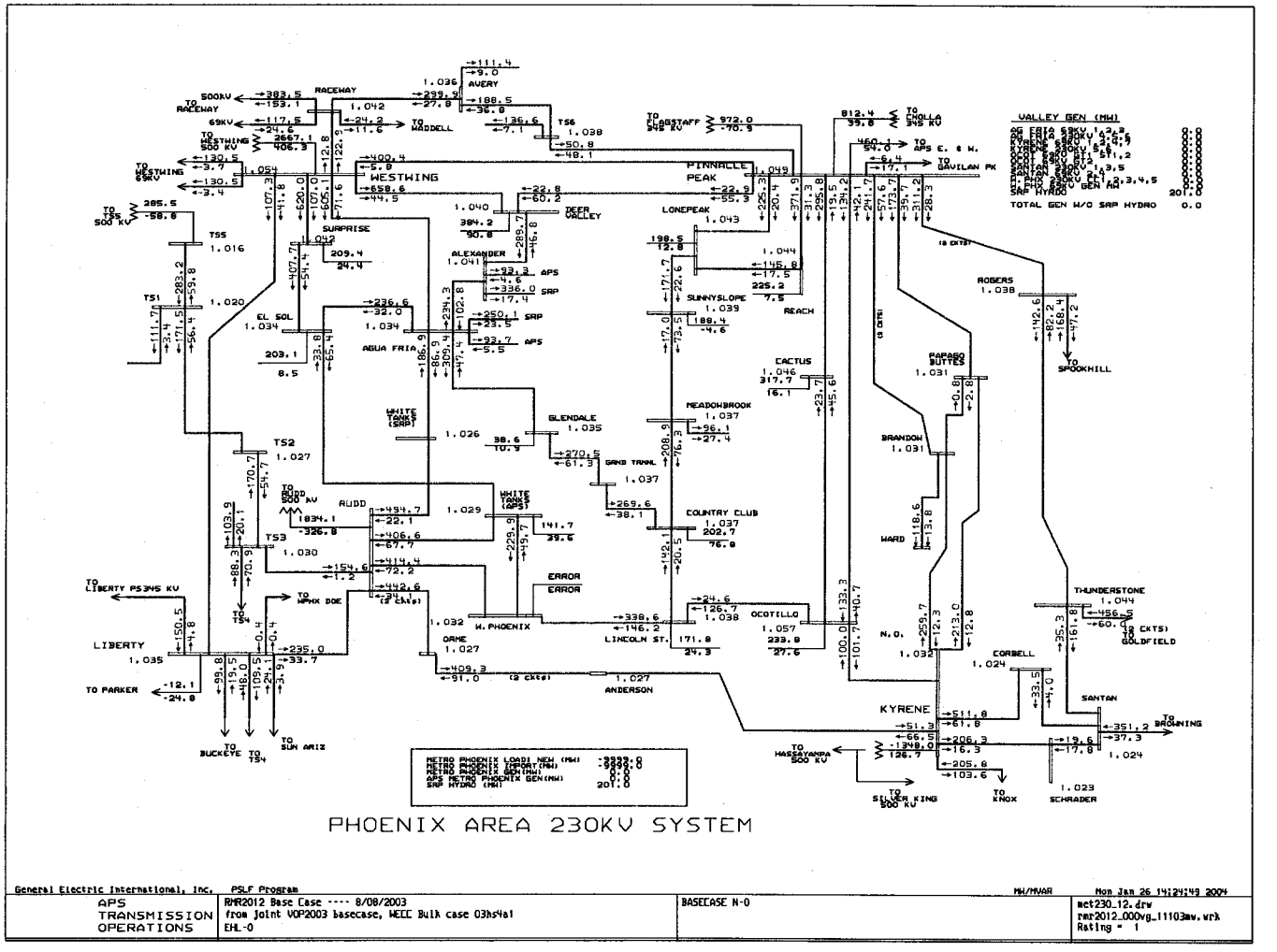
PHOENIX AREA 230KV SYSTEM
General Electric International, Inc.
PSLF Program
MW/MVAR
Mon Jan 26 14:24:49 2004
APS TRANSMISSION OPERATIONS
RMR2012 Base Case ---- 8/08/2003
from joint VOP2003 basecase, WECC Bulk case 03hs4a1
EHL-0
BASECASE N-0
met230_12.drw
rmr2012_000vg_11103mw.wrk
Rating = 1
VALLEY GEN (MW)
TOTAL GEN W/O SRP HYDRO 0.0
METRO PHOENIX LOADI NEW (MW) -9999.0
METRO PHOENIX IMPORT(MW) -9999.0
METRO PHOENIX GEN(MW) 0.0
APS METRO PHOENIX GEN(MW) 0.0
SRP HYDRO (MW) 201.0
RACEWAY
AVERY
WESTWING
PINNALLE PEAK
LONEPEAK
DEER VALLEY
SURPRISE
ALEXANDER
EL SOL
AGUA FRIA
SUNNYSLOPE
REACH
CACTUS
MEADOWBROOK
GLENDALE
WHITE TANKS (SRP)
WHITE TANKS (APS)
RUDD
COUNTRY CLUB
ERROR
W. PHOENIX
ORME
LINCOLN ST.
OCOTILLO
ANDERSON
LIBERTY
KYRENE
N.O.
CORBELL
SANTAN
THUNDERSTONE
ROGERS
PAPAGO BUTTES
BRANDON
WARD
SCHRADER
TO SPOOKHILL
TO GOLDFIELD
TO BROWNING
TO KNOX
TO SILVER KING 500 KV
TO HASSAYAMPA 500 KV
TO BUCKEYE
TO SUN ARIZ
TO PARKER
TO LIBERTY PS345 KV
TO MPHX DOE
TO RUDD 500 KV
TO WESTWING 500 KV
TO WESTWING 69KV
TO RACEWAY
TO WADDELL
TO FLAGSTAFF 345 KV
TO CHOLLA 345 KV
TO APS E. & W.
TO GAVILAN PK
TO TS5 500 KV
TS1
TS2
TS3
TS4
TS5
TS6

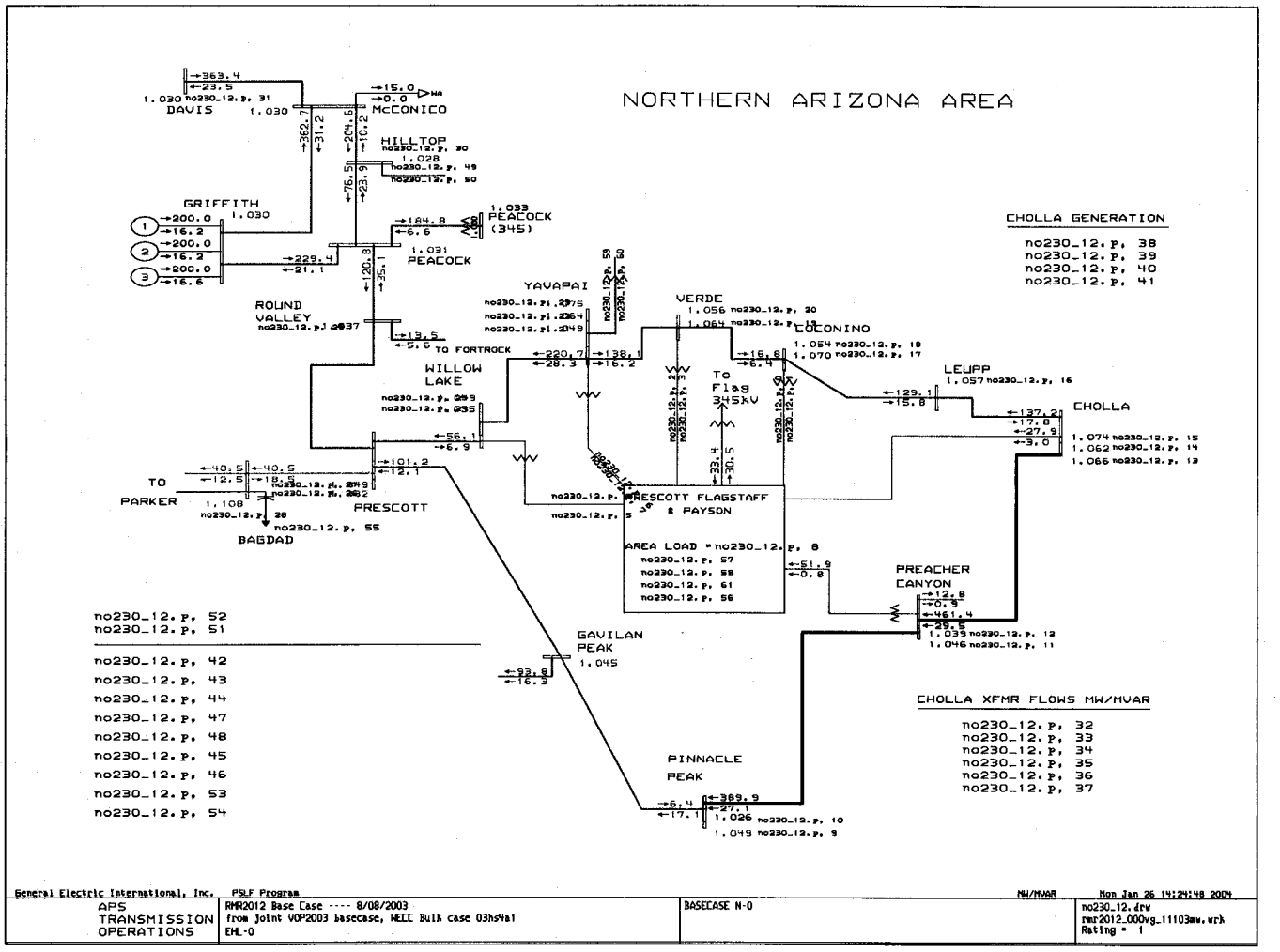
NORTHERN ARIZONA AREA
DAVIS
McCONICO
HILLTOP
GRIFFITH
PEACOCK (345)
PEACOCK
ROUND VALLEY
YAVAPAI
VERDE
LUCONINO
WILLOW LAKE
TO FORTROCK
To Flag 345kV
LEUPP
CHOLLA
TO PARKER
PRESCOTT
BAGDAD
PRESCOTT FLAGSTAFF & PAYSON
AREA LOAD = no230_12.p, 8
no230_12.p, 57
no230_12.p, 58
no230_12.p, 61
no230_12.p, 56
PREACHER CANYON
GAVILAN PEAK
PINNACLE PEAK
CHOLLA GENERATION
no230_12.p, 38
no230_12.p, 39
no230_12.p, 40
no230_12.p, 41
CHOLLA XFMR FLOWS MW/MVAR
no230_12.p, 32
no230_12.p, 33
no230_12.p, 34
no230_12.p, 35
no230_12.p, 36
no230_12.p, 37
no230_12.p, 52
no230_12.p, 51
no230_12.p, 42
no230_12.p, 43
no230_12.p, 44
no230_12.p, 47
no230_12.p, 48
no230_12.p, 45
no230_12.p, 46
no230_12.p, 53
no230_12.p, 54
General Electric International, Inc.
PSLF Program
MW/MVAR
Mon Jan 26 14:24:48 2004
APS TRANSMISSION OPERATIONS
RMR2012 Base Case ---- 8/08/2003
from Joint VOP2003 basecase, WECC Bulk case 03hs4a1
EHL-0
BASECASE N-0
no230_12.drw
rmr2012_000vg_11103mw.wrk
Rating = 1

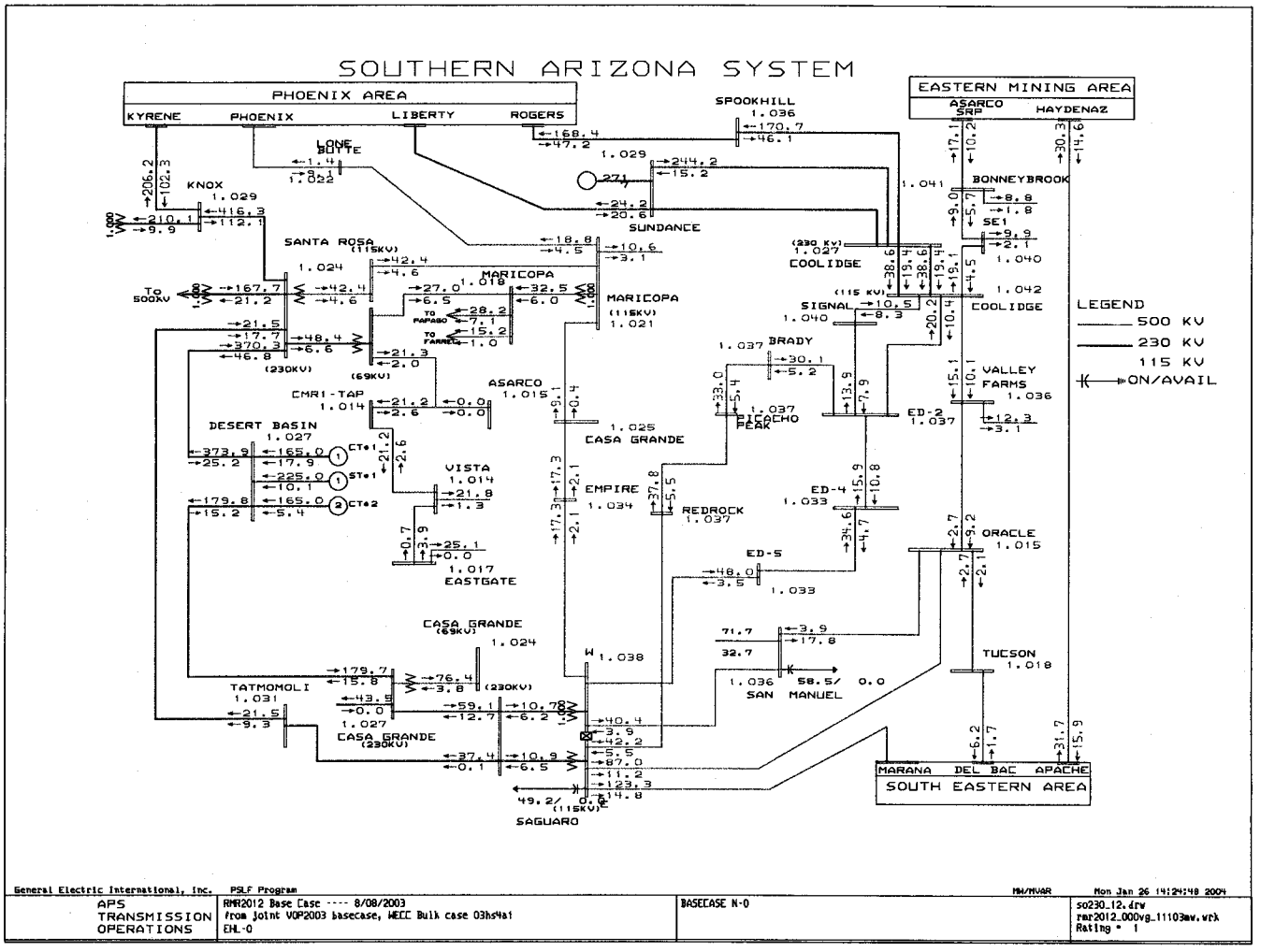
SOUTHERN ARIZONA SYSTEM
PHOENIX AREA
KYRENE
PHOENIX
LIBERTY
ROGERS
EASTERN MINING AREA
ASARCO
SRP
HAYDENAZ
SPOOKHILL
1.036
LONE BUTTE
KNOX
1.029
SANTA ROSA
(115KV)
1.024
MARICOPA
1.018
MARICOPA
(115KV)
1.021
SUNDANCE
1.029
BONNEYBROOK
1.041
SE1
1.040
COOLIDGE
(230 KV)
1.027
COOLIDGE
(115 KV)
1.042
SIGNAL
1.040
BRADY
1.037
VALLEY FARMS
1.036
ED-2
1.037
ASARCO
1.015
CMR1-TAP
1.014
DESERT BASIN
1.027
CT#1
ST#1
CT#2
VISTA
1.014
EMPIRE
1.034
CASA GRANDE
1.025
PICACHO PEAK
REDROCK
1.037
ED-4
1.033
ORACLE
1.015
ED-5
1.033
EASTGATE
1.017
CASA GRANDE
(69KV)
1.024
TATMOMOLI
1.031
CASA GRANDE
(230KV)
1.027
SAN MANUEL
1.036
TUCSON
1.018
SAGUARO
(115KV)
MARANA
DEL BAC
APACHE
SOUTH EASTERN AREA
LEGEND
500 KV
230 KV
115 KV
ON/AVAIL
General Electric International, Inc.
PSLF Program
MW/MVAR
Mon Jan 26 14:24:48 2004
APS TRANSMISSION OPERATIONS
RMR2012 Base Case ---- 8/08/2003
from joint VOP2003 basecase, WECC Bulk case 03hs4a1
EHL-0
BASECASE N-0
so230_12.drw
rmr2012_000vg_11103aw.wrk
Rating = 1

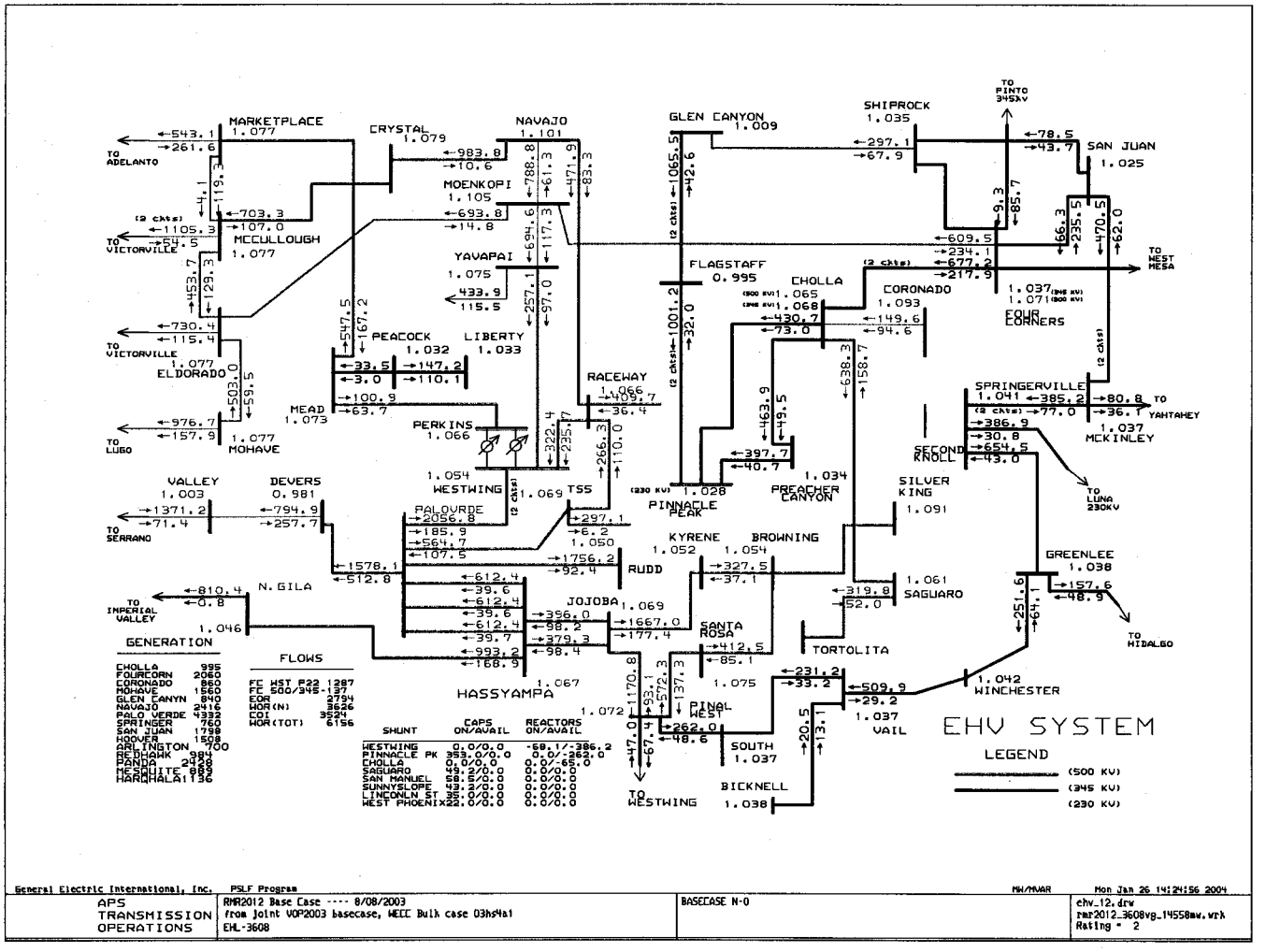
MARKETPLACE 1.077
CRYSTAL 1.079
NAVAJO 1.101
GLEN CANYON 1.009
SHIPROCK 1.035
SAN JUAN 1.025
MOENKOPI 1.105
MCCULLOUGH 1.077
YAVAPAI 1.075
FLAGSTAFF 0.995
CHOLLA 1.065
CORONADO 1.093
FOUR CORNERS 1.037
PEACOCK 1.032
LIBERTY 1.033
ELDORADO 1.077
MEAD 1.073
MOHAVE 1.077
PERKINS 1.066
RACEWAY 1.066
SPRINGERVILLE 1.041
MCKINLEY 1.037
SECOND KNOLL
SILVER KING 1.091
PREACHER CANYON 1.034
PINNACLE PEAK 1.028
WESTWING 1.054
TSS 1.069
VALLEY 1.003
DEVERS 0.981
PALOVERDE
RUDD
KYRENE 1.052
BROWNING 1.054
GREENLEE 1.038
SAGUARO 1.061
N. GILA 1.046
JOJOBA 1.069
SANTA ROSA
TORTOLITA
WINCHESTER 1.042
HASSYAMPA 1.067
PINAL WEST
SOUTH 1.037
VAIL 1.037
BICKNELL 1.038
TO ADELANTO
TO VICTORVILLE
TO LUGO
TO SERRANO
TO IMPERIAL VALLEY
TO PINTO 345KV
TO WEST MESA
TO YAHTAHEY
TO LUNA 230KV
TO HIDALGO
TO WESTWING
GENERATION
CHOLLA 995
FOURCORN 2060
CORONADO 860
MOHAVE 1560
GLEN CANYN 840
NAVAJO 2415
PALO VERDE 4332
SPRINGER 760
SAN JUAN 1798
HOOVER 1508
ARLINGTON 700
REDHAWK 984
PANDA 2428
MESQUITE 885
HARQUAHALA 1136
FLOWS
FC HST P22 1287
FC 500/345-127
EOR 2794
WOR(N) 3626
COI 3524
WOR(TOT) 6156
SHUNT CAPS ON/AVAIL REACTORS ON/AVAIL
WESTWING 0.0/0.0 -68.1/-386.2
PINNACLE PK 353.0/0.0 0.0/-262.0
CHOLLA 0.0/0.0 0.0/-65.0
SAGUARO 49.2/0.0 0.0/0.0
SAN MANUEL 58.5/0.0 0.0/0.0
SUNNYSLOPE 49.2/0.0 0.0/0.0
LINCOLN ST 35.0/0.0 0.0/0.0
WEST PHOENIX 22.0/0.0 0.0/0.0
EHV SYSTEM
LEGEND
(500 KV)
(345 KV)
(230 KV)
General Electric International, Inc.
PSLF Program
MW/MVAR
Mon Jan 26 14:24:56 2004
APS TRANSMISSION OPERATIONS
RMR2012 Base Case ---- 8/08/2003
from Joint VOP2003 basecase, WECC Bulk case 03hs4a1
EHL-3608
BASECASE N-0
ehv.12.drw
rmr2012_3608vg_14558mw.wrk
Rating = 2

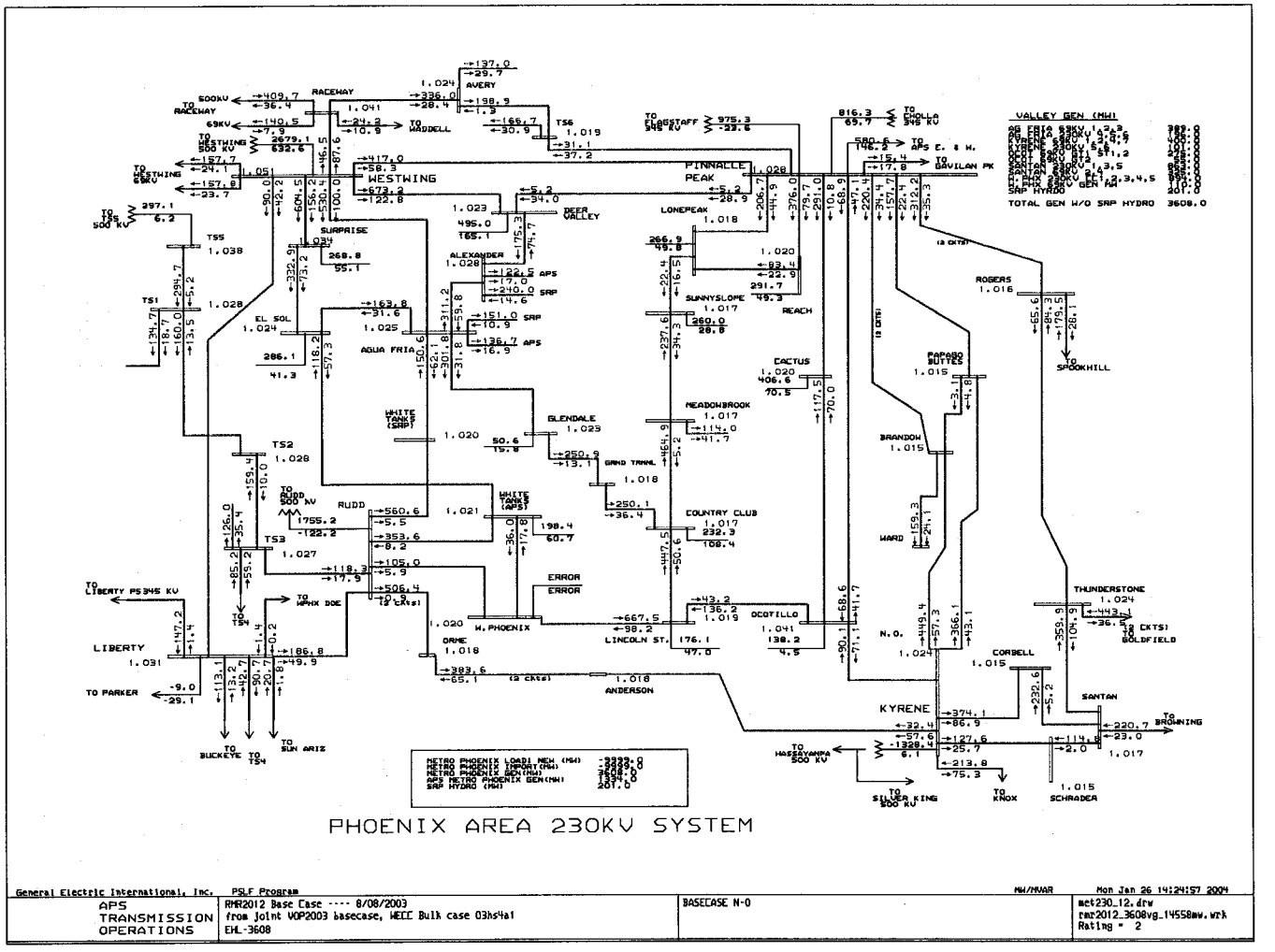
PHOENIX AREA 230KV SYSTEM
VALLEY GEN (MW)
TOTAL GEN W/O SRP HYDRO 3608.0
WESTWING
PINNACLE PEAK
LONEPEAK
SUNNYSLOPE
REACH
CACTUS
MEADOWBROOK
COUNTRY CLUB
OCOTILLO
LINCOLN ST.
ANDERSON
W. PHOENIX
ORME
RUDD
GLENDALE
AGUA FRIA
EL SOL
SURPRISE
ALEXANDER
DEER VALLEY
RACEWAY
AVERY
LIBERTY
KYRENE
N.O.
CORBELL
SANTAN
THUNDERSTONE
BRANDON
WARD
PAPAGO BUTTES
ROGERS
SCHRADER
TO PARKER
TO BUCKEYE
TO SUN ARIZ
TO HASSAYAMPA 500 KV
TO SILVER KING 500 KV
TO KNOX
TO BROWNING
TO SPOOKHILL
TO GOLDFIELD
TO LIBERTY PS 345 KV
TO WPHX DOE
TO WESTWING 500 KV
TO WESTWING 69KV
TO RACEWAY
TO WADDELL
TO FLAGSTAFF 345 KV
TO CHOLLA 345 KV
TO APS E. & W.
TO GAVILAN PK
METRO PHOENIX LOAD1 NEW (MW) -9999.0
METRO PHOENIX IMPORT(MW) -9999.0
METRO PHOENIX GEN(MW) 3608.0
APS METRO PHOENIX GEN(MW) 1334.0
SRP HYDRO (MW) 201.0
General Electric International, Inc. PSLF Program
MW/MVAR
Mon Jan 26 14:24:57 2004
APS TRANSMISSION OPERATIONS
RMR2012 Base Case ---- 8/08/2003
from joint VOP2003 basecase, WECC Bulk case 03hs4a1
EHL-3608
BASECASE N-0
met230_12.drw
rmr2012_3608vg_14558mw.wrk
Rating = 2

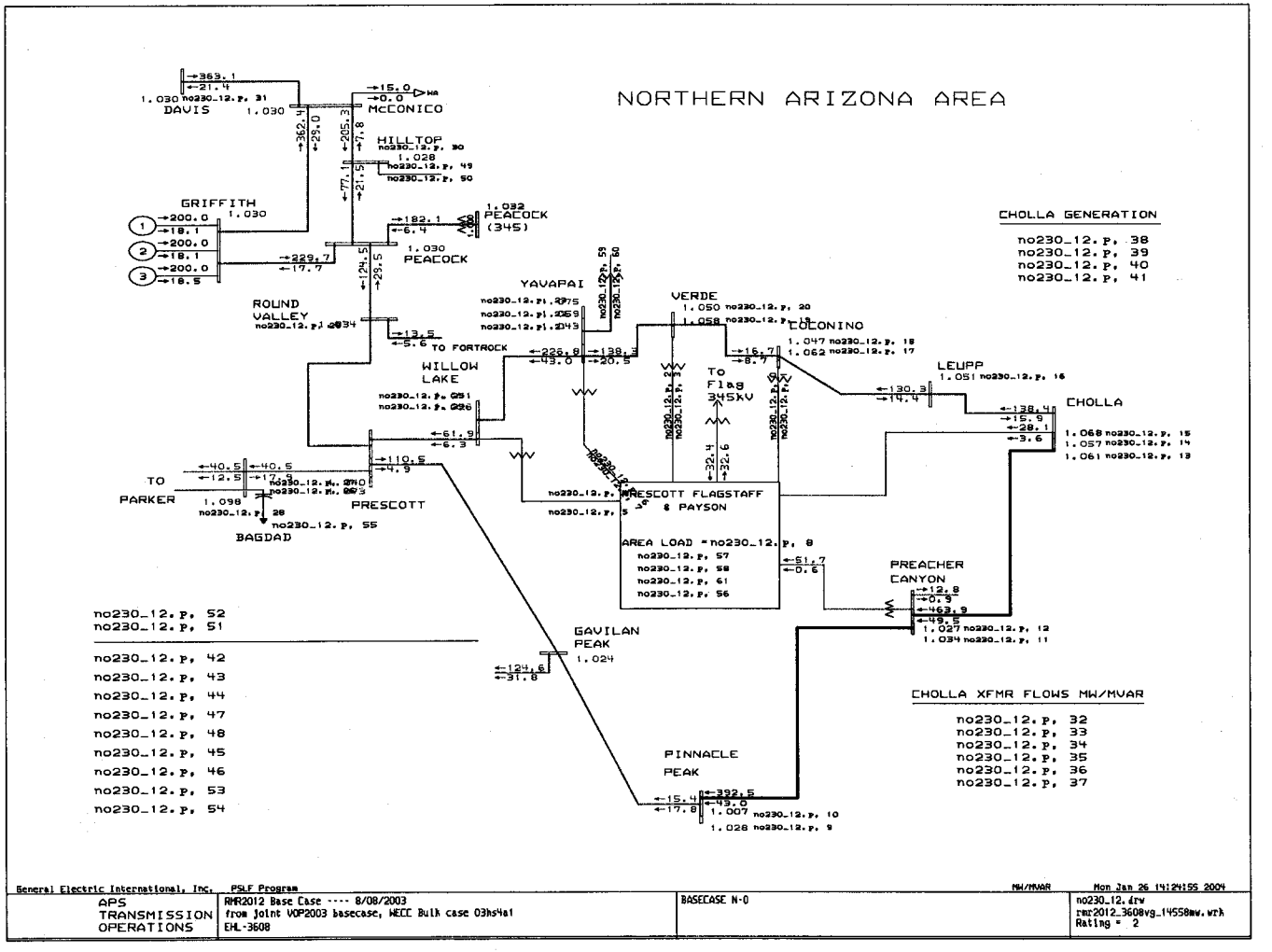
NORTHERN ARIZONA AREA
DAVIS
MCCONICO
HILLTOP
GRIFFITH
PEACOCK (345)
PEACOCK
ROUND VALLEY
WILLOW LAKE
TO FORTROCK
YAVAPAI
VERDE
COCONINO
TO Flag 345kV
LEUPP
CHOLLA
TO PARKER
BAGDAD
PRESCOTT
PRESCOTT FLAGSTAFF & PAYSON
AREA LOAD = no230_12.p, 8
no230_12.p, 57
no230_12.p, 58
no230_12.p, 61
no230_12.p, 56
PREACHER CANYON
GAVILAN PEAK
PINNACLE PEAK
CHOLLA GENERATION
no230_12.p, 38
no230_12.p, 39
no230_12.p, 40
no230_12.p, 41
no230_12.p, 52
no230_12.p, 51
no230_12.p, 42
no230_12.p, 43
no230_12.p, 44
no230_12.p, 47
no230_12.p, 48
no230_12.p, 45
no230_12.p, 46
no230_12.p, 53
no230_12.p, 54
CHOLLA XFMR FLOWS MW/MVAR
no230_12.p, 32
no230_12.p, 33
no230_12.p, 34
no230_12.p, 35
no230_12.p, 36
no230_12.p, 37
General Electric International, Inc.
PSLF Program
MW/MVAR
Mon Jan 26 14:24:55 2004
APS TRANSMISSION OPERATIONS
RMR2012 Base Case ---- 8/08/2003
from joint WOP2003 basecase, WECC Bulk case 03hs4a1
EHL-3608
BASECASE N-0
no230_12.drw
rmr2012_3608vg_14558mw.wrk
Rating = 2

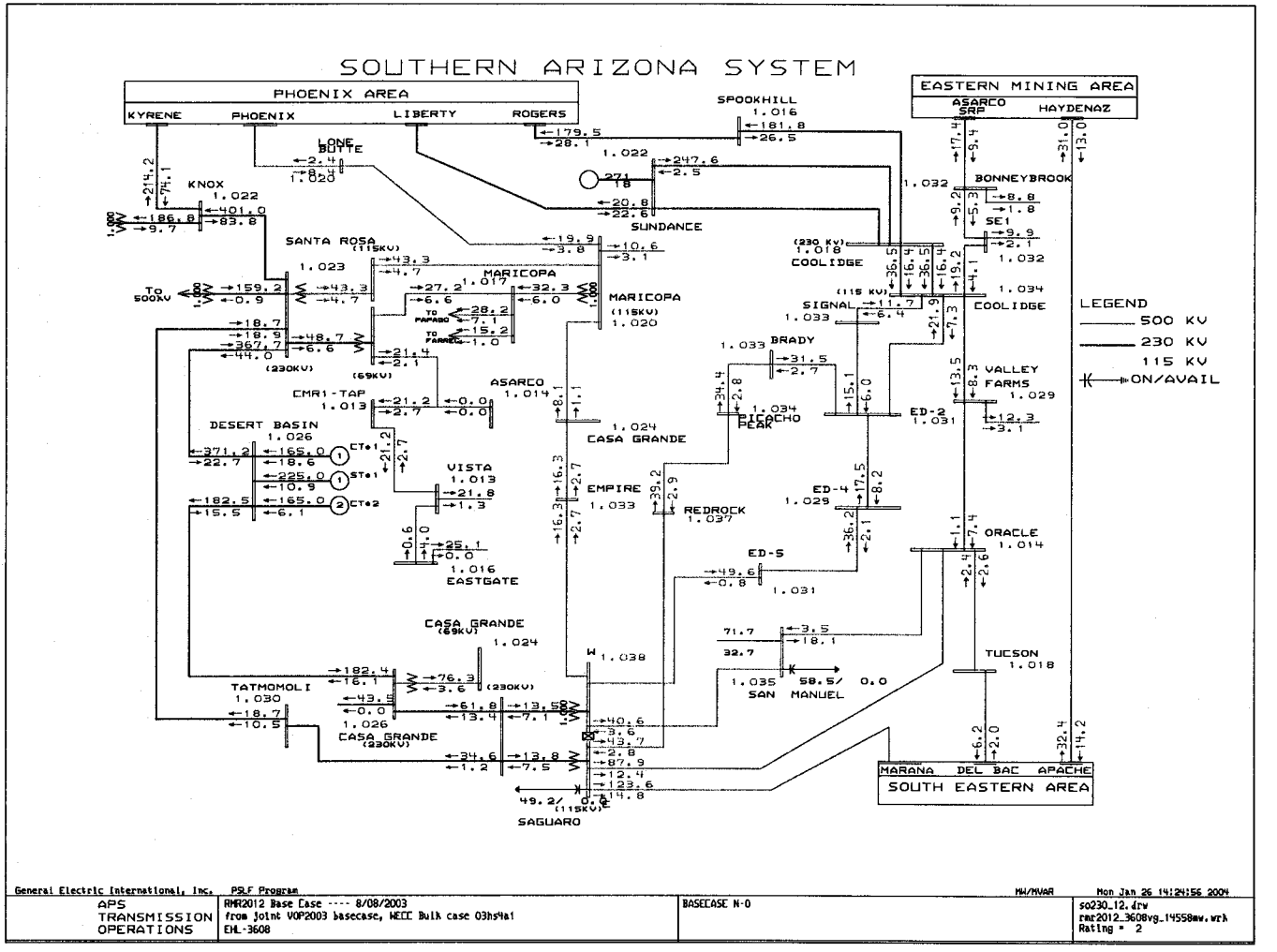
SOUTHERN ARIZONA SYSTEM
PHOENIX AREA
KYRENE
PHOENIX
LIBERTY
ROGERS
EASTERN MINING AREA
ASARCO SRP
HAYDENAZ
SPOOKHILL
1.016
LONE BUTTE
1.020
KNOX
1.022
SUNDANCE
BONNEYBROOK
SE1
1.032
SANTA ROSA (115KV)
1.023
MARICOPA
1.017
MARICOPA (115KV)
1.020
TO 500KV
(230 KV)
1.018
COOLIDGE
(115 KV)
1.034
COOLIDGE
SIGNAL
1.033
LEGEND
500 KV
230 KV
115 KV
ON/AVAIL
BRADY
1.033
VALLEY FARMS
1.029
ED-2
1.031
ASARCO
1.014
CMR1-TAP
1.013
DESERT BASIN
1.026
CT*1
ST*1
CT*2
1.024
CASA GRANDE
PICACHO PEAK
1.034
VISTA
1.013
EMPIRE
1.033
REDROCK
1.037
ED-4
1.029
ORACLE
1.014
1.016
EASTGATE
ED-5
1.031
CASA GRANDE (69KV)
1.024
TUCSON
1.018
TATMOMOLI
1.030
1.035
SAN MANUEL
58.5/ 0.0
1.026
CASA GRANDE (230KV)
MARANA
DEL BAC
APACHE
SOUTH EASTERN AREA
49.2/ 0.0
(115KV)
SAGUARO
General Electric International, Inc.
PSLF Program
MW/MVAR
Mon Jan 26 14:24:56 2004
APS TRANSMISSION OPERATIONS
RMR2012 Base Case ---- 8/08/2003
from joint VOP2003 basecase, WECC Bulk case 03hs4a1
EHL-3608
BASECASE N-0
so230_12.drw
rmr2012_3608vg_14558mw.wrk
Rating = 2