A Citizens Energy
2498 Airway Aven
P.O. Box 3099
Kingman, Arizona
(928) 681-4100

0000007760

CITIZENS Arizona Electric SM

RECEIVED

2003 JAN 31 A 11: 18

AZ CORP COMMISSION
DOCUMENT CONTROL

January 31, 2003

Mr. Ernest Johnson
Director, Utilities Division
Arizona Corporation Commission
1210 West Washington Avenue
Phoenix, AZ 86607

RE: Ten Year Plan, Citizens Utilities Company, Arizona Electric Division (2003-2012)
(Docket #: E-00000D-03-0047)

Dear Mr. Johnson:

In accordance with Arizona Revised Statute, Section 40-360.02, Citizens Communications Company's Ten Year Plan regarding planned transmission line and facilities is attached.

Please let me know if you have questions or comments.

Sincerely,

Thomas J. Ferry
Vice President & General Manager

Enclosures

cc: Bill DeJulio
Ernesto Ojeda
Carl Dabelstein
Sean Breen

Arizona Corporation Commission
DOCKETED

JAN 31 2003

DOCKETED BY

Citizens Arizona Electric

Ten-Year Plan
(Docket E-00000D-03-0047)

2003-2012

Prepared for the Arizona Corporation Commission and the Power Plant and Transmission Line Siting Committee

File date: January 31, 2003

Table of Contents

Introduction 3
Service Territories 4
  Mohave County 4
  Santa Cruz County 4
Reliability Must Run (RMR) Analysis 5
Citizens Load Forecast 5
Mohave County 6
  Transmission Projects 6
  Mohave County Service Territory Map 8
Santa Cruz County 9
  Transmission Projects 9
  Schematic – Potential 115 kV upgrades Santa Cruz 12
  Santa Cruz County Service Territory Map 13
Attached Appendices
  A. Power Engineers, Inc. Santa Cruz District Transmission System Action Plan
  B. Citizens Load Forecast performed by R.W. Beck

Introduction

The following ten-year plan pursuant to A.R.S 40-360.02 is submitted by Citizens Communications Company, Arizona Electric Division (Citizens). Included with this plan are transmission facilities planned for both the Mohave and Santa Cruz County service territories.

In addition to addressing the transmission facilities planned for the Citizens service areas, this document also addresses a recent System Impact Study conducted by Western regarding a new Citizens Substation in Mohave County, improvements related to Santa Cruz County, and an updated Citizens Load Forecast.

Citizens plans include several transmission projects in the next ten years. The majority of the system upgrades are planned for the Santa Cruz service territory, with only one planned facility upgrade, and one contingent project identified in the Mohave County region. Previously reported facilities that have been completed, canceled, or deferred beyond the upcoming ten-year period are not included. These plans are tentative information only, and pursuant to A.R.S. 40-360.02 (F) are subject to change.

The following projects are proposed for the Mohave County Region:

- North Havasu 230/69kV Substation
- North Havasu – Griffith Transmission Line (contingent project)

The following projects are proposed for the Santa Cruz County Region:

- Nogales 115kV Transmission Line #2
- Gateway 345/115 kV Substation
- Valencia 115 kV Substation Expansion

In addition to planning Citizens transmission facilities, Citizens is actively involved in the following regional Arizona Transmission planning activities:

- Central Arizona Transmission Study (CATS)
- Central Arizona Transmission Study – High Voltage (CATS-HV)
- Joint Planning Agreement (JPA) with Western

Service Territories

Following the short discussion of activities in the service territories are the maps of the planned facilities and schematic for several of the proposed projects.

Mohave County

In the summer of 2003, Citizens will install a new 230/69kV substation, North Havasu, connected approximately 10 miles north of the existing Black Mesa Substation. The Western Area Power Administration ("Western") recently completed and provided a System Impact Study for the North Havasu substation to Citizens. The System Impact Study determined that that Citizens can serve its loads in the Lake Havasu area from the North Havasu substation with an interconnection to the Parker- Davis #1 230 kV line under normal operating conditions for all N-1 conditions. Under certain operating conditions, specifically maximum generation at Hoover, Davis and Griffith power plants, zero generation at South Point and Parker power plants, Havasu Pumps on at maximum, regional wide peak load condition, and an outage of the Davis – Topock 230kV #2 line may overload the Davis – Topock 230kV #1 transmission line. Citizens believes that these simultaneous conditions during peak periods (including running the Havasu pumps on peak for the CAP) is not a credible condition, however Citizens is working with Western to develop operating nomograms that would reduce the loading on the Davis – Topock 230kV #1 transmission line under these conditions. Citizens is also reviewing the long-term requirements for the North Havasu substation and still considers the Griffith – North Havasu 230kV line as an alternative for consideration, and currently has a CEC (Order #88) for this line addition.

Santa Cruz County

Citizens long-term plan to continue to improve the reliability for the Santa Cruz service territory is to construct a redundant transmission line to Valencia substation from the new Gateway substation, per CEC Order #111. The current schedule for this line is pending the outcome of approval of TEP's South-Gateway 345 kV line from the Department of Energy and the U.S. Forest Service.

In the near term, Citizens is working on an agreement with Tucson Electric Power (TEP) to connect Citizens distribution system to the TEP distribution system to provide support under abnormal system conditions.

Citizens has conducted a power flow study (attached as Appendix A from Power Engineers, Inc.) to review the Santa Cruz area load growth for the near and long term plans, and under various system conditions. Citizens and TEP are currently reviewing the suggested action plan from the power flow study to identify the opportunities to continue to improve the reliability for this region.

Reliability Must Run (RMR) Analysis

Western had agreed to conduct the Mohave County RMR analysis based on the requirements of the ACC Second Biennial Transmission Assessment. At the time this 10-Year Plan is due, Citizens had not received the results of the RMR analysis from Western to review or comment on the RMR Analysis for Mohave County. Citizens reserves the right to review and comment on these studies as they become available to Citizens.

Citizens Load Forecast

Attached, as Appendix B, is the latest Citizens load forecast for our service territory.

Mohave County

Transmission Projects

Project Designation	North Havasu Substation
Project Description	Approximately three miles north of Lake Havasu City.
Voltage	230 kV, 69 kV, 20.8 kV
Capacity	80 MVA (with provision for expansion)
Size	400 feet x 400 feet
Equipment	1- 230/69 kV 80 MVA transformer 1- 69/20.8 kV transformer (future) 4- 69 kV circuit breaker bays (one initial) Associated bus, switches, fittings, structures and control room.
Transmission Source	Parker Davis #1 Transmission Line Griffith-North Havasu Transmission Line (future).
Purpose	The additional substation is expected to reinforce the Lake Havasu City 69 kV sub-transmission as well as improve service reliability.
Schedule	
Construction Start	Fall 2002
Construction End	July 2003
Is Certificate Necessary	None

Line Designation	Griffith-North Havasu Transmission (contingent project)
Project Description	
Voltage	230 kV, 69 kV (double circuit)
Capacity	300 MVA (thermal)
Origin	Griffith Substation
Intermediate point(s)	None
Termination point	North Havasu Substation
Length (miles)	Approximately 40 miles
Routing	West of and parallel to I-40 to Gem Acres Interchange. Diagonal southeast to the Parker Davis line at Highway 95. Parallel to PD-1 to North Havasu Substation site southeast of the Lake Havasu city airport. Routing to be within corridor as approved and described in CEC Order #88.
Purpose	Reinforce the existing transmission grid and provide interconnection between Citizens' load centers in Mohave County.
Schedule	
Construction Start	Under Study
Construction End	Under Study
Is Certificate Necessary	CEC Ordered in Case 88, Issued July 2, 1997

Mohave County Service Territory Map

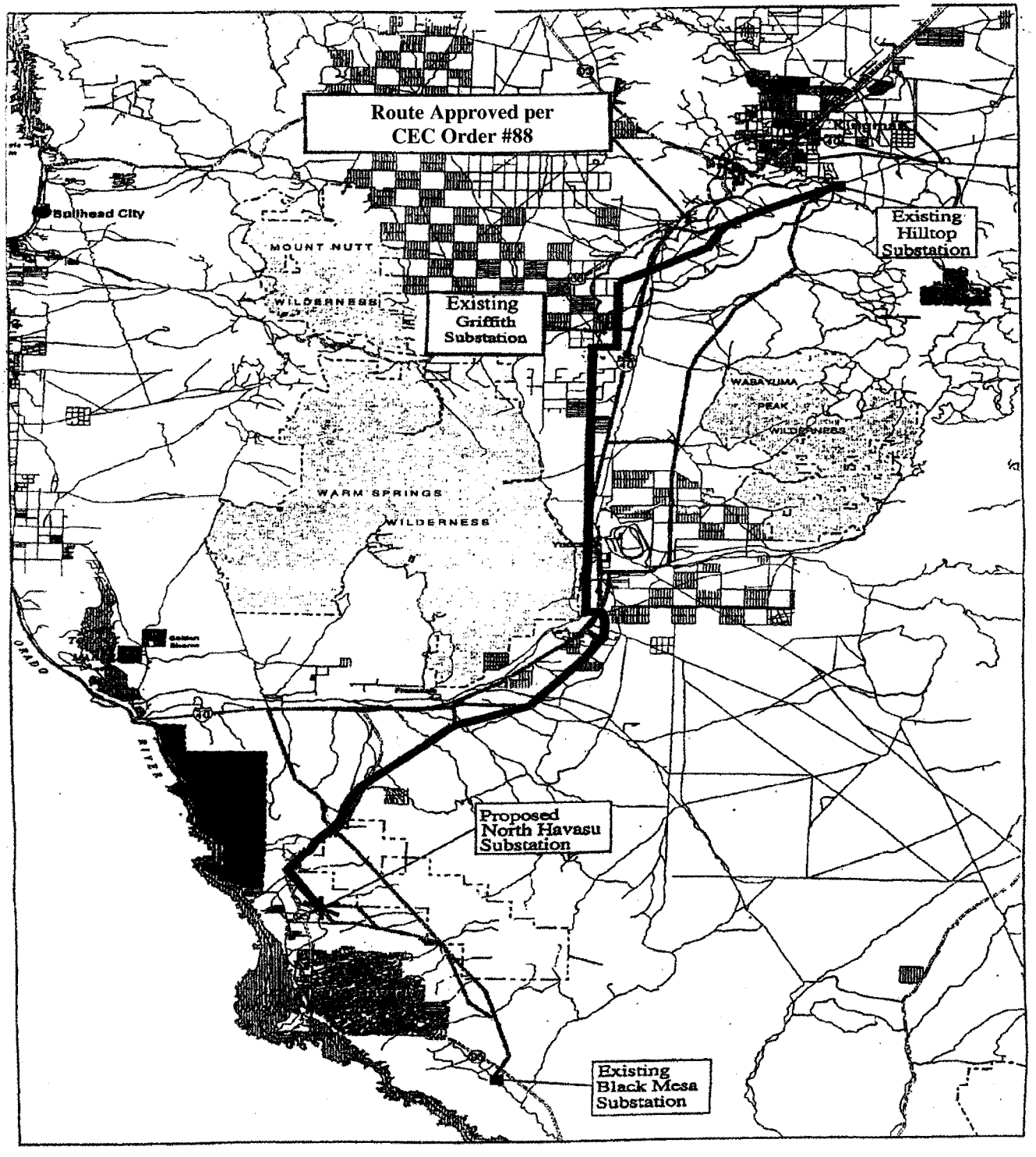

Santa Cruz County

Transmission Projects

Line Designation	Nogales Transmission Line #2
Size	
Voltage	115 kV
Capacity	110 MVA (thermal)
Point of Origin	Citizens' Gateway 345/115 kV substation (new)
Point of Termination	Citizens' Valencia Substation (existing)
Length (miles)	Approximately 3
Routing	Generally South and East from TEP's proposed Gateway 345 kV substation crossing Interstate 19 and traversing private ROW. Routing to be within the corridor as described in the CEC order issued in Case 111.
Purpose	The additional transmission line increases transmission system reliability and provides additional load serving capacity to Citizens' Santa Cruz Service Area.
Schedule	
Construction Start	Approximately 2004
Construction End	Approximately 8 months after Department of Energy and U.S. Forest Service Record of Decision for TEP's South-Gateway 345 kV line.
Is Certificate Necessary	CEC Ordered in Case 111

Project Designation	Gateway 345/115 kV Substation
Project Description	Located near Nogales, Arizona
Voltage	Operating voltages include: 345 kV, 115 kV, and 13.2 kV (future)
Capacity	100 MVA
Size	Approximately 265 feet x 450 feet
Equipment	Two 345 kV power circuit breakers, three 115 kV power circuit breaker bays (one installed initially) and associated switches, bus, fittings, relay metering and communication equipment.
Transmission Source	TEP's South-Gateway 345 kV line
Purpose	The proposed substation facilities provide an interconnection and source for Citizen's second transmission line to Citizen's Santa Cruz Service Area and a future distribution substation as provided for in CEC Case 111.
Schedule	
Construction Start	Approximately 2004
Construction End	Approximately 8 months after Department of Energy and U.S. Forest Service Record of Decision for TEP's South-Gateway 345 kV line.
Is Certificate Necessary	None

Project Designation	Valencia 115 kV Substation Expansion
Project Description	Located near Nogales, Arizona
Voltage	Operating voltages include 115 kV and 13.2 kV
Capacity	110 MVA (line capacity)
Size	Approximately 200 feet x 200 feet
Equipment	Addition of two 115 kV line terminations, three 115 kV power circuit breakers, and associated switches, bus, fittings, relay metering and communication equipment.
Purpose	The proposed substation facilities provide an interconnection and source for Citizen's second transmission line to Citizen's Santa Cruz Service Area and a future distribution substation as provided for in CEC Case 111.
Schedule	
Construction Start	Approximately 2004
Construction End	Approximately 8 months after Department of Energy and U.S. Forest Service Record of Decision for TEP's South-Gateway 345 kV line.
Is Certificate Necessary	None

Schematic – Potential 115 kV upgrades Santa Cruz

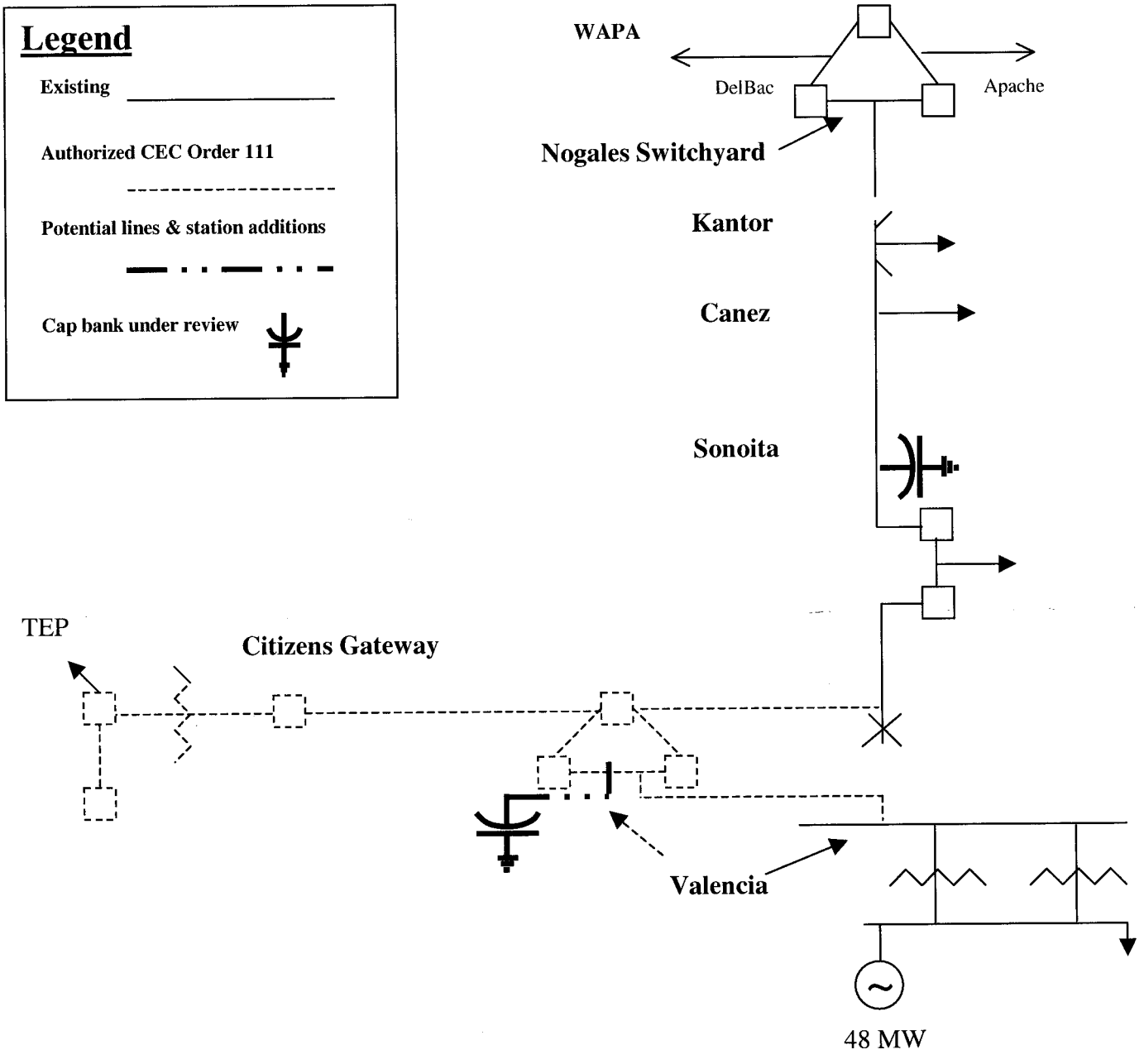

Santa Cruz County Service Territory Map

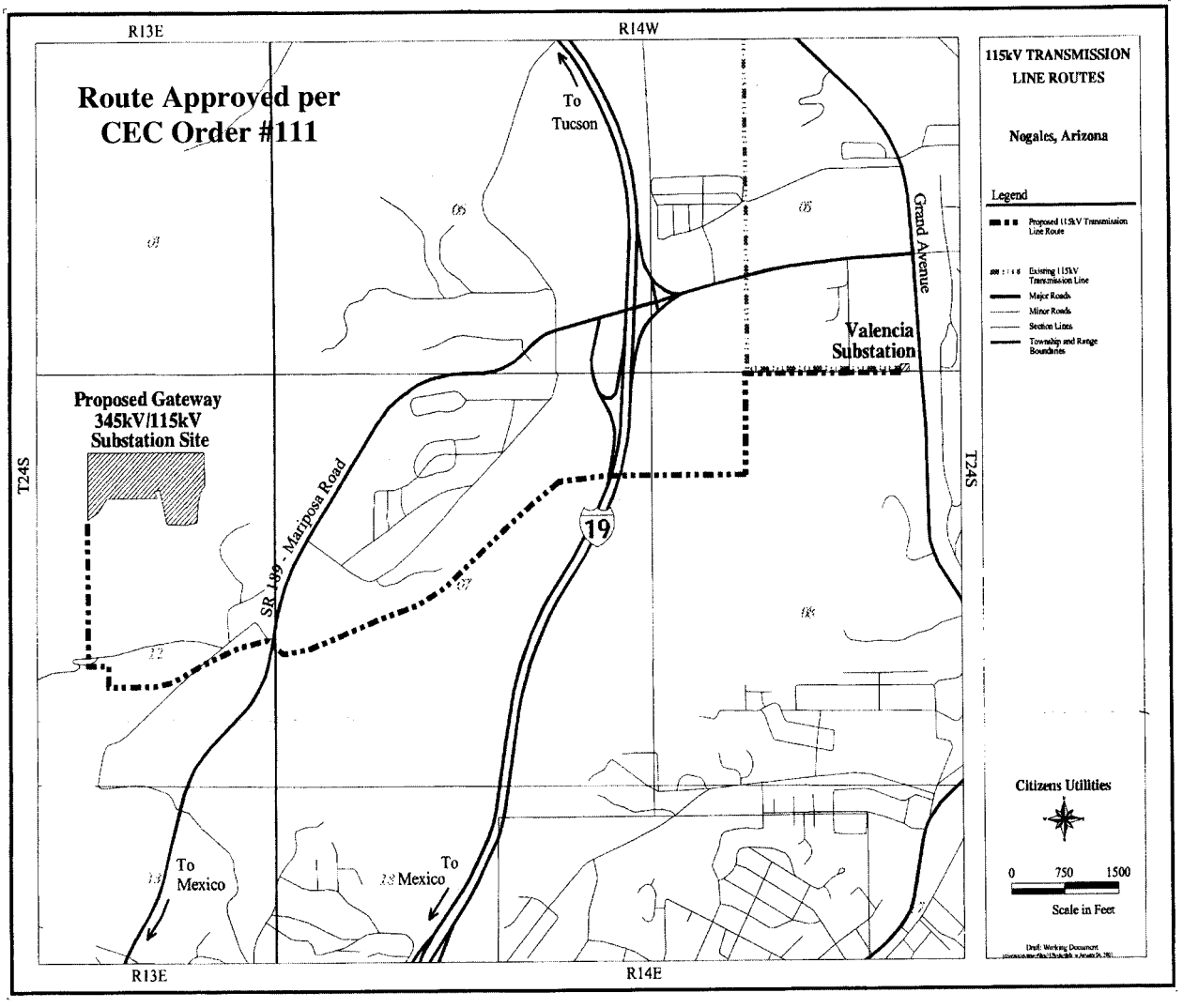

Attached Appendices

A. Power Engineers, Inc. Santa Cruz District Transmission System Action Plan
B. Citizens Load Forecast performed by R.W. Beck

Appendix A

CITIZENS Arizona Electric SM

POWER PROJECT NO.: 120921-01
COPY NO.: _____
ISSUED TO: _____

Citizens Communications Company Arizona Electric Division

Santa Cruz District Transmission System Action Plan

June 2002

FOR INFORMATION CONTACT:

- Mike Walbert, P.E.
- Ken Che

POWER ENGINEERS

POWER ENGINEERS, INC. / P.O. BOX 1066 / HAILEY, IDAHO 83333
TEL. (208) 788-3456 / FAX (208) 788-2082

TABLE OF CONTENTS

INTRODUCTION 1
EXECUTIVE SUMMARY 3
Scenario 1 Summary 3
Scenario 2 Summary 5
Action Plan 5
SYSTEM ANALYSIS 7
Planning Criteria 7
Substation Transformers and 115kV Transmission Lines 8
Power Flow Cases 10
Computer Model Verification Cases 10
Case 00 10
Case 00A 10
POWER FLOW SCENARIOS 12
SCENARIO 1 12
Case S1-C01 12
Case S1-C02 12
Case S1-C03 13
Case S1-C03A 14
Case S1-C03B 14
Case S1-C03C 15
Case S1-C04 15
Case S1-C05 16
Case S1-C06 16
Case S1-C07 17
Case S1-C08 18
Case S1-C09 18
Case S1-C09A 19
Case S1-C09B 19
Case S1-C09C 20
Case S1-C10 20

Case S1-C11 21
Scenario 1 Summary 21
SCENARIO 2 26
Case S2-C01 26
Case S2-C01A 26
Case S2-C01B 27
Case S2-C01C 27
Case S2-C02 27
Case S2-C02A 28
Case S2-C02B 28
Case S2-C03 29
Case S2-C03A 29
Case S2-C03A1 30
Case S2-C03B 30
Case S2-C04 31
Scenario 2 Summary 31

LIST OF TABLES

TABLE 1 – SUBSTATION TRANSFORMERS 8
TABLE 2 –115kV TRANSMISSION LINES 9
TABLE 3 – SCENARIO 1 24
TABLE 4 – SCENARIO 2 33

APPENDICES

APPENDIX A- Computer Model Verification Cases
APPENDIX B- Scenario 1 Power Flow Cases
APPENDIX C- Scenario 2 Power Flow Cases

Citizens Communications Company
Arizona Electric Division
Santa Cruz District Transmission System
Action Plan

INTRODUCTION

The Arizona Corporation Commission (ACC) Decision Number 64356 grants a Certificate of Environmental Compatibility (CEC) for Citizens Communications Company (Citizens) to construct a second 115kV transmission line to improve service reliability to customers in its Santa Cruz service area. Condition number 21 of the CEC order requires that "Citizens shall make the necessary system improvements to ensure continuity of service in the event of an outage on the new 115kV transmission line approved herein and shall submit system improvement plans to the ACC Utilities Division six months from the date this Certificate of Environmental Compatibility is approved by the ACC".

Under Citizens project development agreement with Tucson Electric Power Company (TEP) Citizens will obtain 100MW of transmission capacity from Saguaro to the Point of Delivery that serves its second transmission line (Gateway Substation). Citizens requested that POWER Engineers, Inc. (POWER) develop an action plan for the Santa Cruz District transmission system to increase the delivery capacity to 100MW during an outage of the new 115 kV line.

The existing 115kV transmission line is from Nogales Switchyard (near Tucson) to Valencia Substation (in Nogales); a distance of 53 miles. This line serves Citizens' Kantor, Canez, Sonoita, and Valencia substations.

A new 115kV transmission line will be constructed from a point of interconnection at TEP's Gateway Substation to Citizens' Valencia Substation.

This study's results are based on power flow analyses that examined voltage levels and thermal capacity loading on the 115kV transmission system for both normal system configuration and for single contingency outages.

EXECUTIVE SUMMARY

The analysis of Citizens' Santa Cruz District 115kV transmission system verifies the need for the new 115kV line from Gateway Substation to Valencia Substation. This line will allow Citizens to serve future loads and provide a source to the 115kV system if any single transmission line segment or the 345/115kV substation is out-of-service.

The analysis also shows the need for system improvements prior to the energization of the Gateway Substation to Valencia Substation 115kV line.

Two 115kV transmission system scenarios were examined with the power flow cases:

- Scenario 1 – Existing System without the Gateway Substation to Valencia Substation 115kV Line.
- Scenario 2 – Existing System with the addition of the Gateway Substation and Gateway to Valencia Substation 115kV Line.

Scenario 1 Summary
Existing System without the Gateway Substation to Valencia Substation 115kV Line

Scenario 1 power flow cases show that low voltage levels occur prior to the 115kV transmission lines becoming overloaded. Under normal system operation (all lines in-service) the thermal capacity ratings of the lines are capable of serving Santa Cruz District loads up to the 100MW level examined in the study. Transmission system voltage levels are below the planning criteria of 0.95 per unit with the existing load of 57MW.

The single contingency outages for Scenario 1 (the existing system) were examined by an overview of the 115kV system. The worst case outage is the Nogales Switchyard to Kantor Substation 115kV line. This outage would disconnect the Santa Cruz District 115kV system from the transmission grid. Loss of the Nogales Switchyard to Kantor Substation line would require Citizens to serve load from the generators at the Valencia

Plant. These generators are not capable of serving Citizens' entire load during peak periods. A loss of the other line sections (Kantor Substation to Canez Substation, Canez Substation to Sonoita Substation, or Sonoita Substation to Valencia Substation) would disconnect the load downline from the outage from the transmission grid.

The Scenario 1 power flow cases show that with 60MW of Santa Cruz District Load the 13.2kV distribution system voltage can not be maintained with the use of substation transformer de-energized taps set to the maximum boost position and 13.2kV voltage regulators.

The 115kV line from Gateway Substation to Valencia Substation is being designed, however, this line is not expected to be in-service to serve the summer 2003 loads. Scenario 1 cases examined system improvements that can be made prior to the energization of the Gateway-Valencia 115kV line. The improvements studied included re-conductoring the 4/0 ACSR line into Valencia Substation and adding capacitors at the Valencia or Sonoita substations.

The power flow cases indicate that re-conductoring the 4/0 ACSR line into Valencia Substation does not make a significant improvement on system voltage levels.

Capacitor banks at either Valencia or Sonoita substations will improve system voltages. Adding 25Mvar of capacitance at either Valencia or Sonoita will allow 65-70MW of load to be served while maintaining the planning criteria minimum voltage level of 0.950 per unit.

The planning criteria for the maximum step-voltage change for the addition or removal of capacitor banks is 5%. The power flow cases show that the addition of capacitance at Valencia and Sonoita substations needs to be brought on-line in blocks of 10Mvar or less to keep the voltage from rising more than 5%.

The Valencia Substation transformers start to become overloaded with about 80MW of Santa Cruz District load. Construction of a new 115-13.2kV substation near Gateway Substation will be used to relieve loading on the Valencia Substation transformers when this load level is reached.

Scenario 2 Summary
Existing System with the addition of the Gateway Substation and Gateway to Valencia Substation 115kV Line

Scenario 2 examines the system for normal system operation (all lines in-service) and for single contingency outages (one 115kV transmission line out-of-service). The acceptable voltage range is 0.95 to 1.05 per unit for normal system operation and 0.92 to 1.10 per unit for single contingency outages.

The Scenario 2 power flow cases show that the system can serve up to 100MW of load under normal system operation and for the single contingency outages and remain within the planning criteria voltage levels.

With 25Mvar of capacitance at Valencia and Sonoita substations the 115kV system can serve up to 100MW of Santa Cruz District Load for the worst case single contingency outage (Gateway Substation to Valencia Substation line out) and be within the planning criteria minimum voltage of 0.920 per unit.

Action Plan

The following is a recommended action plan which is in addition to the construction of the Gateway Substation to Valencia Substation 115kV line.

- Budget for and install a combination of 25Mvar of switched capacitors on the 115kV bus at Valencia and Sonoita substations before the summer of 2003. Limit the size of each switched bank to less than 10Mvar and provide for both automatic voltage control and manual control by dispatcher using the SCADA system.

Adding 25Mvar of capacitor banks to the 115kV system will allow 65-70MW of load to be served within the planning criteria minimum voltage level of 0.950 per unit (all lines in-service).

- Budget for and install a combination of an additional 25Mvar of switched capacitors on the 115 kV bus at Valencia and Sonoita substations once the Santa Cruz District Load reaches 70MW. Limit the size of each switched bank to less than 10Mvar and provide for both automatic voltage control and manual control by dispatcher using the SCADA system. A total of 50Mvar of capacitor banks on the 115kV system will allow 100MW of load to be served within the planning criteria minimum voltage level of 0.920 per unit (single contingency outage). The worst case single contingency outage is the Gateway Substation to Valencia Substation 115kV line.

SYSTEM ANALYSIS

The Heavy Summer 2003 (2003 HS3-SA) Western Systems Coordinating Council (WSCC) power flow database was provided by Citizens. This is the base case developed and used in Phase II of the Central Arizona Transmission Study. This database included TEP's proposed 345kV transmission line from South Substation to Gateway Substation, the 345-115kV Gateway Substation, and Citizens' new 115kV line from Gateway Substation to Valencia Substation.

This database was modified to divide the 8.4-mile long 115kV transmission line from Sonoita Substation to Valencia Substation into two sections: The first section is 3.6-miles long with 559.5 AAAC conductor from Sonoita Substation to where the conductor changes to 4/0 ACSR. The second section is 4.8-miles long with 4/0 ACSR from the conductor change to Valencia Substation.

The 115-13.2kV transformers at Kantor, Canez, Sonoita, and Valencia substations were added to the model using their nameplate impedances. The Santa Cruz District load was added at 13.2kV at a power factor of 0.98 lagging. This loading is based on peak loads at Nogales Switchyard on June 14 and 18, 2002.

Planning Criteria

The following planning criteria were used in the power flow analysis.

- With a radial transmission line the acceptable voltage range for planning purposes is 0.95 to 1.05 per unit with the system intact. At 115kV this is approximately 109kV to 121kV.
- With two or more sources and a looped transmission system serving the load area the acceptable voltage range for planning purposes is 0.92 to 1.10 per unit with a critical element out (single contingency outage). At 115kV this is approximately 106kV to 126kV.

- Maximum line loading is 100% of the conductor's thermal ampacity rating.
- Maximum transformer loading is 100% of its highest nameplate rating.
- Maximum step-voltage change with the addition or removal of capacitor banks is 5%.

Substation Transformers and 115kV Transmission Lines

Tables 1 and 2 provide a summary of the substation transformers and the 115kV transmission lines that were examined.

TABLE 1 – SUBSTATION TRANSFORMERS

Transformer	Voltage (kV)	MVA Rating	Impedance %Z
Kantor	115-13.2kV	10/12.5MVA	8.70
Canez	115-13.2kV	10/12.5MVA	8.70 (modeled same as Kantor)
Sonoita #1	115-13.2kV	12/16/20MVA	7.26
Sonoita #2	115-13.2kV	12/16/20MVA	7.35
Valencia #1	115-13.2kV	12/16/20MVA	7.28
Valencia #2	115-13.2kV	12/16/20MVA	7.24

TABLE 2 –115kV TRANSMISSION LINES

Line Section	Length (miles)	Conductor Type	Structure Type	Thermal Ampacity Rating (amperes)	Thermal Rating at 115kV (MVA)
Del Bac Substation to Nogales Switchyard	...	...	...	603*	120
Adams Substation to Nogales Switchyard	...	...	...	803*	160
Nogales Switchyard – Kantor Substation	27.7	559.5 AAAC	Steel Pole	663**	132
Kantor Substation to Canez Substation	13.5	559.5 AAAC	H-Frame	663**	132
Canez Substation to Sonoita Substation	3.3	559.5 AAAC	H-Frame	663**	132
Sonoita Substation to Conductor Change	3.6	559.5 AAAC	H-Frame	663**	132
Conductor Change to Valencia Substation	4.8	4/0 ACSR	H-Frame	340***	68
Gateway Substation to Valencia Substation	3.5	559.5 AAAC	Steel Pole	663**	132

Notes:

* Thermal ampacity ratings for the Del Bac Substation to Nogales Switchyard and Adams Substation to Nogales Switchyard were obtained from the WSCC database.

** The thermal ampacity rating for the 559.5 AAAC conductor is from the Southwire Handbook.

*** The thermal ampacity rating for the 4/0 ACSR conductor is from the Westinghouse Transmission and Distribution Reference book.

Power Flow Cases

Power flow cases were run for the normal system (all lines in-service) and with single contingency outages (one transmission line segment out-of-service) after the Gateway Substation to Valencia Substation 115kV line is in-service.

The base case power flows were run using the Heavy Summer 2003 database. The initial Santa Cruz District peak load was considered to be about 57MW. To increase load to intermediate levels and to the peak load of 100MW a growth factor was applied to the Santa Cruz District loads and the power flow cases were run to examine the system voltages and loadings.

Computer Model Verification Cases

Two power flow cases were run to verify the computer model. These cases represented the existing system without the Gateway Substation to Valencia Substation 115kV line in-service. These cases examined the system during peak loading on June 14 and 18, 2002.

Case 00

Peak load at Nogales Switchyard on June 14, 2002 was 50.9MW. Citizens SCADA system showed the 115kV voltage at Valencia Substation at 102 to 104kV. The computer model calculated the voltage to be 104kV (0.905 per unit).

Case 00A

Peak load at Nogales Switchyard on June 18, 2002 was 57.3MW. Citizens SCADA system showed the 115kV voltage at Valencia Substation at 99 to 102kV. The computer model calculated the voltage to be 102kV (0.889 per unit).

These cases verify that the calculated voltage from the computer model matches the actual voltage recorded by the SCADA system for 115kV voltages at Valencia Substation.

The 115kV voltage levels at Valencia Substation are below the minimum planning criteria of 109kV (0.95 per unit). Citizens is able to maintain adequate voltage at the 13.2kV bus of the distribution substations by using the 115-13.2kV transformers de-energized taps (+/- 5%) and 13.2kV voltage regulators (+/- 10%). However, this is not considered acceptable for planning purposes and system improvements need to be made to serve existing and future loads.

POWER FLOW SCENARIOS

Two scenarios were examined with the power flow cases:

- Scenario 1 – Existing System without the Gateway Substation to Valencia Substation 115kV Line.
- Scenario 2 – Existing System with the addition of the Gateway Substation and Gateway to Valencia Substation 115kV Line.

SCENARIO 1
Existing System without the Gateway Substation to Valencia Substation 115kV Line

Case S1-C01

The Santa Cruz District Load at Nogales Switchyard is about 60MW. The 60MW load is a 5% increase over the June 18, 2002 peak load of 57MW. The 115kV voltage at Valencia Substation is 100.2kV (0.871 per unit). The Santa Cruz District losses are 9.21MW or about 15%.

The Nogales Switchyard to Kantor Substation and the 4/0 ACSR line into Valencia Substation are the heaviest loaded 115kV lines at about 50% of their thermal capacity ratings.

Case S1-C01 shows that at 60MW of load the 13.2kV voltage at Sonoita and Valencia substations can no longer be maintained with the use of the transformer de-energized taps and voltage regulators. Additional voltage support will need to be provided by running one or more of the Valencia Plant generators.

Case S1-C02

This is Case S1-C01 with the 4/0 ACSR conductor into Valencia Substation re-conductored with 559.5 AAAC. The Santa Cruz District Load at Nogales Switchyard is

60MW. The 115kV voltage at Valencia Substation is 100.9kV (0.878 per unit). The Santa Cruz District losses are 9.01MW or about 15%.

The Nogales Switchyard to Kantor Substation line is the heaviest loaded 115kV line at about 50% of its thermal capacity ratings. The re-conductored line into Valencia Substation is about 25% loaded.

Case S1-C02 shows that re-conductoring the 4/0 ACSR line into Valencia Substation improves the voltage from 0.871 to 0.878 per unit (about a 1% increase) and improves losses from 9.21 to 9.01MW (about 0.33% reduction).

Re-conductoring the 4/0 ACSR line into Valencia Substation with 559.5 AAAC does not make a significant improvement on system voltage levels.

Case S1-C03

This is Case S1-C01 with a 25Mvar capacitor bank added at Valencia Substation. The Santa Cruz District Load at Nogales Switchyard is 60MW. The 115kV voltage at Valencia Substation is 115.4kV (1.003 per unit). The Santa Cruz District losses are 8.49MW or about 14%.

The Nogales Switchyard to Kantor Substation line is loaded to about 45% of its thermal capacity rating. The 4/0 ACSR line into Valencia Substation is the heaviest loaded 115kV line at about 50% of its thermal capacity rating.

Case S1-C03 shows that adding the 25Mvar of capacitance at Valencia Substation improves the 115kV voltage to acceptable levels for 60MW of Santa Cruz District load. The voltage increase at Valencia Substation with the addition of the 25Mvar of capacitance is about 15%. A maximum voltage change of 5% is the planning criteria for the addition or removal of capacitor banks. Adding 25Mvar of capacitance would require the banks to be switched in Mvar blocks that do not change the voltage by more than 5%.

Case S1-C03A

This is Case S1-C01 with a 10Mvar capacitor bank added at Valencia Substation. The Santa Cruz District Load at Nogales Switchyard is 60MW. The 115kV voltage at Valencia Substation is 106.0kV (0.921 per unit). The Santa Cruz District losses are 8.69MW or about 14%.

The Nogales Switchyard to Kantor Substation line and the 4/0 ACSR line into Valencia Substation are loaded to about 45% of their thermal capacity ratings.

Case S1-C03A shows that adding 10Mvar of capacitance at Valencia Substation improves the 115kV voltage about 5.8%. The planning criteria is for a maximum voltage change with the addition or removal of capacitor banks of 5%. Adding capacitance will require the banks to be switched in less than 10Mvar blocks in order to keep the voltage change to 5% or less.

Case S1-C03B

This is Case S1-C01 with a 15Mvar capacitor bank added at Valencia Substation. The Santa Cruz District Load at Nogales Switchyard is 60MW. The 115kV voltage at Valencia Substation is 109.0kV (0.948 per unit). The Santa Cruz District losses are 8.54MW or about 14%.

The Nogales Switchyard to Kantor Substation line and the 4/0 ACSR line into Valencia Substation are loaded to about 45% of their thermal capacity ratings.

Case S1-C03B shows that adding 15Mvar of capacitance at Valencia Substation improves the 115kV voltage about 2.8% from Case S1-C03A (with 10Mvar of capacitance). The planning criteria is for a maximum voltage change with the addition or removal of capacitor banks of 5%. Adding capacitance in blocks of 5Mvar will keep the voltage change to less than 5%.

Case S1-C03C

This is Case S1-C01 with a 20Mvar capacitor bank added at Valencia Substation. The Santa Cruz District Load at Nogales Switchyard is 60MW. The 115kV voltage at Valencia Substation is 112.1kV (0.975 per unit). The Santa Cruz District losses are 8.47MW or about 14%.

The Nogales Switchyard to Kantor Substation line and the 4/0 ACSR line into Valencia Substation are loaded to about 45% of their thermal capacity ratings.

Case S1-C03C shows that adding the 20Mvar of capacitance at Valencia Substation improves the 115kV voltage about 2.8% from Case S1-C03B (with 15Mvar of capacitance). The planning criteria is for a maximum voltage change with the addition or removal of capacitor banks of 5%. Adding capacitance in blocks of 5Mvar will keep the voltage change to less than 5%.

Case S1-C03, the addition of 25Mvar at Valencia Substation, shows that the 5Mvar increase from Case S1-C03C improves the 115kV voltage about 2.8%.

Case S1-C04

This is Case S1-C03 (with 25Mvar of capacitance at Valencia Substation) with the 4/0 ACSR conductor into Valencia Substation re-conductored with 559.5 AAAC. The Santa Cruz District Load at Nogales Switchyard is 60MW. The 115kV voltage at Valencia Substation is 115.9kV (1.008 per unit). The Santa Cruz District losses are 8.33MW or about 14%.

The Nogales Switchyard to Kantor Substation line is the heaviest loaded 115kV line at about 45% of its thermal capacity rating. The re-conductored line into Valencia Substation is about 25% loaded.

Case S1-C04 shows that re-conductoring the 4/0 ACSR line into Valencia Substation improves the voltage from 1.003 to 1.008 per unit (about a 0.5% increase) and improves losses from 8.49 to 8.33MW (about 0.27% reduction).

Re-conductoring the 4/0 ACSR line into Valencia Substation with 559.5 AAAC does not make a significant improvement on system voltage levels.

Case S1-C05

This is Case S1-C01 with a 25Mvar capacitor bank added at Valencia Substation and the Santa Cruz District Load at Nogales Switchyard increased to 80MW. The 115kV voltage at Valencia Substation is 104.0kV (0.904 per unit). The Santa Cruz District losses are 11.20MW or about 14%.

The Nogales Switchyard to Kantor Substation and the 4/0 ACSR into Valencia Substation 115kV lines are loaded to about 60% of their thermal capacity ratings. The transformers at Valencia Substation are close to 100% loaded. Construction of a new 115-13.2kV substation near Gateway Substation will be used to relieve loading on the Valencia Substation transformers.

Case S1-C05 shows that adding the 25Mvar of capacitance at Valencia Substation improves the 115kV voltage but at 80MW of load these voltage levels are below the 0.95 per unit planning criteria. The 13.2kV voltage levels can be maintained for up to 80MW of Santa Cruz District Load with the use of de-energized transformer taps and voltage regulators.

Case S1-C06

This is Case S1-C01 with 25Mvar capacitor banks added at Valencia and Sonoita substations and the Santa Cruz District Load at Nogales Switchyard increased to 80MW. The 115kV voltage at Valencia Substation is 122.3kV (1.064 per unit). The Santa Cruz District losses are 11.00MW or about 14%.

The Nogales Switchyard to Kantor Substation and the 4/0 ACSR into Valencia Substation 115kV lines are loaded to about 60% of their thermal capacity ratings. The transformers at Valencia Substation are close to 100% loaded. Construction of a new 115-13.2kV substation near Gateway Substation will be used to relieve loading on the Valencia Substation transformers.

Case S1-C06 shows that adding 25Mvar of capacitance at Valencia and Sonoita substations improves the 115kV voltage but at 80MW of load these voltage levels are above the 1.05 per unit planning criteria. The voltage increase with the addition of 25Mvar of capacitance at Sonoita Substation is about 18%. A maximum voltage change of 5% is the planning criteria for the addition or removal of capacitor banks. Adding 25Mvar of capacitance would require the banks to be switched in Mvar blocks that do not change the voltage by more than 5%.

Case S1-C07

This is Case S1-C01 with 25Mvar capacitor banks added at Valencia and Sonoita substations and the Santa Cruz District Load at Nogales Switchyard increased to 95MW. The 115kV voltage at Valencia Substation is 109.2kV (0.950 per unit). The Santa Cruz District losses are 13.34MW or about 14%.

The Nogales Switchyard to Kantor Substation and the 4/0 ACSR into Valencia Substation 115kV lines are loaded to about 70% of their thermal capacity ratings. The transformers at Valencia Substation are loaded greater than 100%. Construction of a new 115-13.2kV substation near Gateway Substation will be used to relieve loading on the Valencia Substation transformers.

Case S1-C07 shows that adding 25Mvar of capacitance at Valencia and Sonoita substations allows up to 95MW to be served within the planning criteria minimum voltage of 0.950 per unit.

Case S1-C08

This is Case S1-C03 with a 25Mvar capacitor bank added at Valencia Substation with the Santa Cruz District Load at Nogales Switchyard is increased until a 0.950 per unit voltage is reached at one of the 115kV buses at Kantor, Canez, Sonoita, or Valencia substations. This voltage minimum was reached at about 71MW. The 115kV voltage at Valencia Substation is 109.2kV (0.950 per unit). The Santa Cruz District losses are 9.89MW or about 14%.

The Nogales Switchyard to Kantor Substation line and the 4/0 ACSR line into Valencia Substation are loaded to about 55% of their thermal capacity ratings.

Case S1-C08 shows that adding the 25Mvar of capacitance at Valencia Substation allows up to 71MW to be served within the planning criteria minimum voltage of 0.950 per unit.

Case S1-C09

This is Case S1-C01 with a 25Mvar capacitor bank added at Sonoita Substation. The Santa Cruz District Load at Nogales Switchyard is 60MW. The 115kV voltage at Valencia Substation is 113.8kV (0.990 per unit). The Santa Cruz District losses are 8.43MW or about 14%.

The Nogales Switchyard to Kantor Substation line and the 4/0 ACSR line into Valencia Substation are loaded to about 45% of their thermal capacity ratings.

Case S1-C09 shows that adding 25Mvar of capacitance at Sonoita Substation improves the 115kV voltage to acceptable levels for 60MW of Santa Cruz District Load. However, the voltage increase at Sonoita and Valencia substations is about 13%. A maximum voltage change of 5% is the planning criteria for the addition or removal of capacitor banks. Adding 25Mvar of capacitance would require the banks to be switched in Mvar blocks that do not change the voltage by more than 5%.

Case S1-C09A

This is Case S1-C01 with a 10Mvar capacitor bank added at Sonoita Substation. The Santa Cruz District Load at Nogales Switchyard is 60MW. The 115kV voltage at Valencia Substation is 105.4kV (0.917 per unit). The Santa Cruz District losses are 8.72MW or about 14%.

The Nogales Switchyard to Kantor Substation line and the 4/0 ACSR line into Valencia Substation are loaded to about 45% of their thermal capacity ratings.

Case S1-C09A shows that adding 10Mvar of capacitance at Sonoita Substation improves the 115kV voltage about 5.0%. The planning criteria is for a maximum voltage change with the addition or removal of capacitor banks of 5%. Adding capacitance will require the banks to be switched in 10Mvar or less blocks in order to keep the voltage change to 5% or less.

Case S1-C09B

This is Case S1-C01 with a 15Mvar capacitor bank added at Sonoita Substation. The Santa Cruz District Load at Nogales Switchyard is 60MW. The 115kV voltage at Valencia Substation is 108.1kV (0.940 per unit). The Santa Cruz District losses are 8.56MW or about 14%.

The Nogales Switchyard to Kantor Substation line and the 4/0 ACSR line into Valencia Substation are loaded to about 45% of their thermal capacity ratings.

Case S1-C09B shows that adding 15Mvar of capacitance at Sonoita Substation improves the 115kV voltage about 2.5% from Case S1-C09A (with 10Mvar of capacitance). The planning criteria is for a maximum voltage change with the addition or removal of capacitor banks of 5%. Adding capacitance in blocks of 5Mvar will keep the voltage change to less than 5%.

Case S1-C09C

This is Case S1-C01 with a 20Mvar capacitor bank added at Sonoita Substation. The Santa Cruz District Load at Nogales Switchyard is 60MW. The 115kV voltage at Valencia Substation is 110.9kV (0.965 per unit). The Santa Cruz District losses are 8.46MW or about 14%.

The Nogales Switchyard to Kantor Substation line and the 4/0 ACSR line into Valencia Substation are loaded to about 45% of their thermal capacity ratings.

Case S1-C09C shows that adding 20Mvar of capacitance at Sonoita Substation improves the 115kV voltage about 2.5% from Case S1-C09B (with 15Mvar of capacitance). The planning criteria is for a maximum voltage change with the addition or removal of capacitor banks of 5%. Adding capacitance in blocks of 5Mvar will keep the voltage change to less than 5%.

Case S1-C09, the addition of 25Mvar at Sonoita Substation, shows that the 5Mvar increase from Case S1-C09C improves the 115kV voltage about 2.6%.

Case S1-C10

This is Case S1-C09 with a 25Mvar capacitor bank added at Sonoita Substation with the Santa Cruz District Load at Nogales Switchyard is increased until a 0.950 per unit voltage is reached at one of the 115kV buses at Kantor, Canez, Sonoita, or Valencia substations. This voltage minimum was reached at about 68MW. The 115kV voltage at Valencia Substation is 109.3kV (0.950 per unit). The Santa Cruz District losses are 9.50MW or about 14%.

The Nogales Switchyard to Kantor Substation line and the 4/0 ACSR line into Valencia Substation are loaded to about 50% of their thermal capacity ratings.

Case S1-C10 shows that adding the 25Mvar of capacitance at Sonoita Substation allows up to 68MW to be served within the minimum voltage criteria of 0.950 per unit.

Case S1-C11

This is Case S1-C01 with a 25Mvar capacitor bank added at Sonoita Substation and the Santa Cruz District Load at Nogales Switchyard increased to 80MW. The 115kV voltage at Valencia Substation is 102.5kV (0.892 per unit). The Santa Cruz District losses are 11.26MW or about 14%.

The Nogales Switchyard to Kantor Substation and the 4/0 ACSR into Valencia Substation 115kV lines are loaded to about 60% of their thermal capacity ratings. The transformers at Valencia Substation are about 100% loaded. Construction of a new 115-13.2kV substation near Gateway Substation will be used to relieve loading on the Valencia Substation transformers.

Case S1-C11 shows that adding 25Mvar of capacitance at Sonoita Substation improves the 115kV voltage but at 80MW of load these voltage levels are below the 0.95 per unit planning criteria. The 13.2kV voltage levels can be maintained for up to 80MW of Santa Cruz District load with the use of de-energized transformer taps and voltage regulators.

Scenario 1 Summary

Existing System without the Gateway Substation to Valencia Substation 115kV Line

Scenario 1 power flow cases show that low voltage levels occur prior to the 115kV transmission lines becoming overloaded. Under normal system operation (all lines in-service) the thermal capacity ratings of the lines are capable of serving Santa Cruz District loads up to the 100MW examined. Transmission system voltage levels are below the planning criteria of 0.95 per unit with the existing load of 57MW.

The single contingency outages for Scenario 1 (the existing system) were examined by an overview of the 115kV system. The worst case outage is the Nogales Switchyard to

Kantor Substation 115kV line. This outage would disconnect the Santa Cruz District 115kV system from the transmission system grid. Loss of the Nogales Switchyard to Kantor Substation line would require Citizens to serve load from the generators at the Valencia Plant. These generators are not capable of serving Citizens' entire load during peak periods. A loss of the other line sections (Kantor Substation to Canez Substation, Canez Substation to Sonoita Substation, or Sonoita Substation to Valencia Substation) would disconnect the load downline from the outage from the transmission grid.

The Scenario 1 power flow cases show that with 60MW of Santa Cruz District Load the 13.2kV distribution system voltage can not be maintained with only the use of substation transformer de-energized taps (+/- 5%) and 13.2kV voltage regulators of (+/- 10%).

The 115kV line from Gateway Substation to Valencia Substation is being designed, however, this line is not expected to be in-service for serving the summer 2003 loads. Scenario 1 cases examined system improvements that can be made prior to the energization of the Gateway-Valencia 115kV line. The improvements studied included re-conductoring the 4/0 ACSR line into Valencia Substation and adding capacitors at the Valencia or Sonoita substations.

The power flow cases indicate that re-conductoring the 4/0 ACSR line into Valencia Substation does not make a significant improvement on system voltage levels.

Capacitor banks at either Valencia or Sonoita substations will improve system voltages. Adding 25Mvar of capacitance at either Valencia or Sonoita will allow 65-70MW of load to be served within the planning criteria minimum voltage level of 0.950 per unit.

The power flow cases show that the addition of capacitance at Valencia or Sonoita needs to be brought on-line in blocks of 10Mvar or less to keep the voltage from rising more than 5%. The planning criteria maximum voltage change with the addition or removal of capacitor banks is 5%.

The Valencia Substation transformers start to become overloaded with about 80MW of Santa Cruz District load. Construction of a new 115-13.2kV substation near Gateway Substation will be used to relieve loading on the Valencia Substation transformers when this load level is reached.

TABLE 3 – SCENARIO 1

Existing System without the Gateway Substation to Valencia Substation 115kV Line

Case	Description Santa Cruz District Load	Lowest 115kV Voltage (Location/Voltage)	Heaviest Loaded 115kV Line (Line/Loading)	Santa Cruz District Losses
S1-C01	60MW Load	Valencia Substation 100.2kV (0.871 pu)	4/0 ACSR into Valencia Sub. 50% Loaded	9.21MW
S1-C02	60MW Load 4/0 ACSR re-conductored with 559.5AAAC	Valencia Substation 100.9kV (0.878 pu)	Nogales Switchyard-Kantor Substation 50% Loaded	9.01MW
S1-C03	60MW Load 25Mvar added at Valencia at 115kV	Sonoita Substation 115.2kV (1.002 pu)	4/0 ACSR into Valencia Sub. 50% Loaded	8.49MW
S1-C03A	60MW Load 10Mvar added at Valencia at 115kV Increases voltage 5.8%	Valencia Substation 106.0kV (0.921 pu)	Nogales Switchyard-Kantor Substation 45% Loaded	8.69MW
S1-C03B	60MW Load 15Mvar added at Valencia at 115kV Increases voltage 2.8% from 10Mvar	Valencia Substation 109.0kV (0.948 pu)	Nogales Switchyard-Kantor Substatiion 45% Loaded	8.54MW
S1-C03C	60MW Load 20Mvar added at Valencia at 115kV Increases voltage 2.8% from 15Mvar	Valencia Substation 112.1kV (0.975 pu)	4/0 ACSR line into Valencia Sub. 45% Loaded	8.47MW
S1-C04	60MW Load 4/0 ACSR re-conductored with 559.5AAAC – 25Mvar added at Valencia at 115kV	Sonoita Substation 115.4kV (1.004 pu)	Nogales Switchyard-Kantor Substation 45% Loaded	8.33MW
S1-C05	80MW Load 25Mvar added at Valencia at 115kV	Valencia Substation 104.0kV (0.904 pu)	4/0 ACSR into Valencia Sub. 60% Loaded	11.20MW
S1-C06	80MW Load 25Mvar added at Valencia and Sonoita at 115kV	Kantor Substation 120.5kV (1.048 pu)	Nogales Switchyard-Kantor Substation 60% Loaded	11.00MW

Case	Description Santa Cruz District Load	Lowest 115kV Voltage (Location/Voltage)	Heaviest Loaded 115kV Line (Line/Loading)	Santa Cruz District Losses
S1-C07	95MW Load 25Mvar added at Valencia and Sonoita at 115kV	Valencia Substation 109.2kV (0.950 pu)	Nogales Switchyard-Kantor Substation 70% Loaded	13.34MW
S1-C08	71MW Load 25Mvar added at Valencia at 115kV Load added until voltage is 0.95 pu	Valencia Substation 109.2kV (0.950 pu)	4/0 ACSR line into Valencia Sub. 55% Loaded	9.89MW
S1-C09	60MW Load 25Mvar added at Sonoita at 115kV	Valencia Substation 113.8kV (0.990 pu)	Nogales Switchyard-Kantor Substation 45% Loaded	8.43MW
S1-C09A	60MW Load 10Mvar added at Sonoita Increases voltage 5%	Valencia Substation 105.4kV (0.917 pu)	4/0 ACSR line into Valencia Sub. 50% Loaded	8.72MW
S1-C09B	60MW Load 15Mvar added at Sonoita Increases voltage 2.5% from 10Mvar	Valencia Substation 108.1kV (0.940 pu)	4/0 ACSR line into Valencia Sub. 45% Loaded	8.56MW
S1-C09C	60MW Load 20Mvar added at Sonoita Increases voltage 2.5% from 15Mvar	Valencia Substation 110.9kV (0.965 pu)	4/0 ACSR line into Valencia Sub. 45% Loaded	8.46MW
S1-C10	68MW Load 25Mvar added at Sonoita at 115kV Load added until voltage is 0.95 pu	Valencia Substation 109.3kV (0.950 pu)	4/0 ACSR line into Valencia Sub. 55% Loaded	9.50MW
S1-C11	80MW Load 25Mvar added at Sonoita at 115kV	Valencia Substation 102.5kV (0.892 pu)	4/0 ACSR line into Valencia Sub. 65% Loaded	11.26MW

SCENARIO 2

Existing System with the addition of the Gateway Substation and Gateway to Valencia Substation 115kV Line

Case S2-C01 – All Lines In-Service

The Santa Cruz District Load is 60MW. The 60MW load is about a 5% increase over the June 18, 2002 peak load of 57MW. The 115kV voltage at Valencia Substation is 115.7kV (1.006 per unit). The Santa Cruz District losses are 6.89MW or about 11%.

The Nogales Switchyard to Kantor Substation is the heaviest loaded 115kV line at about 30% of its thermal capacity rating.

Case S2-C01 shows that the 115kV system can serve up to 60MW of Santa Cruz District Load without overloading lines and maintaining 115kV voltage levels with the addition of the new line Gateway Substation to Valencia Substation.

Case S2-C01A – Outage Nogales Switchyard to Kantor Substation Line

Case S2-C01 with an outage of the Nogales Switchyard to Kantor Substation line. The Santa Cruz District load is 60MW. The voltage at Valencia Substation is 115.5kV (1.004 per unit) and the voltage at Kantor Substation is 113.9kV (0.990 per unit).

The heaviest loaded lines are the Gateway Substation to Valencia Substation and the 4/0 ACSR line into Valencia Substation at about 45% of their thermal capacity ratings.

Case S2-C01A shows that the system with the addition of the Gateway Substation to Valencia Substation line can adequately serve up to 60MW of Santa Cruz District load with an outage of the Nogales Switchyard to Kantor Substation 115kV line.

Case S2-C01B – Outage Gateway Substation to Valencia Substation Line

Case S2-C01 with an outage of the Gateway Substation to Valencia Substation 115kV line. The Santa Cruz District load is 60MW. This case is the same as Scenario 1, Case 01 (S1-C01).

Case S2-C01B shows that the system can not adequately maintain voltage with an outage of the Gateway Substation to Valencia Substation 115kV line. As shown with the Scenario 1 cases adding capacitor banks at Valencia or Sonoita substations will improve the voltage.

Case S2-C01C – Outage 4/0 ACSR Line into Valencia Substation

Case S2-C01 with an outage of the 4/0 ACSR line into Valencia Substation. The Santa Cruz District load is 60MW. The voltage at Valencia Substation is 116.1kV (1.010 per unit) and the voltage at Sonoita Substation is 113.0kV (0.982 per unit).

The heaviest loaded lines are the Gateway Substation to Valencia Substation and the Nogales Switchyard to Kantor Substation at about 22% of their thermal capacity ratings.

Case S2-C01C shows that the system with the addition of the Gateway Substation to Valencia Substation line can adequately serve up to 60MW of Santa Cruz District load with an outage of the 4/0 ACSR line into Valencia Substation.

Case S2-C02 – All Lines In-Service

The Santa Cruz District Load is 100MW. The 115kV voltage at Valencia Substation is 115.4kV (1.003 per unit). The 115kV voltage at Sonoita Substation is 114.3kV (0.994 per unit). The Santa Cruz District losses are 8.38MW or about 8%.

The Nogales Switchyard to Kantor Substation and Gateway Substation to Valencia Substation are the heaviest loaded 115kV lines at about 45% of their thermal capacity

ratings. The transformers at Valencia Substation are loaded greater than 100%. Construction of a new 115-13.2kV substation near Gateway Substation will be used to relieve loading on the Valencia Substation transformers.

Case S2-C02 shows that the 115kV system can serve up to 100MW of Santa Cruz District Load without overloading transmission lines and can maintain adequate voltage levels with the addition of the new line Gateway Substation to Valencia Substation.

Case S2-C02A – Outage Nogales Switchyard to Kantor Substation Line

Case S2-C02 with an outage of the Nogales Switchyard to Kantor Substation line. The Santa Cruz District load is 100MW. The voltage at Valencia Substation is 114.7kV (0.997 per unit) and the voltage at Kantor Substation is 111.5kV (0.970 per unit).

The heaviest loaded lines are the Gateway Substation to Valencia Substation and the 4/0 ACSR line into Valencia Substation at about 80% of their thermal capacity ratings.

Case S2-C02A shows that the system with the addition of the Gateway Substation to Valencia Substation line can adequately serve up to 100MW of Santa Cruz District load with an outage of the Nogales Switchyard to Kantor Substation 115kV line.

Case S2-C02B – Outage 4/0 ACSR Line into Valencia Substation

Case S2-C02 with an outage of the 4/0 ACSR line into Valencia Substation. The Santa Cruz District load is 100MW. The voltage at Valencia Substation is 116.4kV (1.012 per unit) and the voltage at Sonoita Substation is 105.7kV (0.919 per unit).

The heaviest loaded lines are the Gateway Substation to Valencia Substation and the Nogales Switchyard to Kantor Substation at about 40% of their thermal capacity ratings.

Case S2-C02B shows that the system with the addition of the Gateway Substation to Valencia Substation line can adequately serve up to 100MW of Santa Cruz District load

with an outage of the 4/0 ACSR line into Valencia Substation. The 115kV voltage at Sonoita Substation is at the planning criteria minimum of 0.92 per unit.

Case S2-C03 – All Lines In-Service

This is Case S2-C02 with the Santa Cruz District Load increased until a 0.950 per unit voltage is reached at one of the 115kV buses at Kantor, Canez, Sonoita, or Valencia substations. This voltage minimum was reached at about 160MW. The 115kV voltage at Sonoita Substation is 109.4kV (0.951 per unit). The Santa Cruz District losses are 11.75MW or about 7%.

The Gateway Substation to Valencia Substation line is loaded to about 85% of its thermal capacity rating. At about 80MW the Valencia Substation transformers start to become overloaded and at 160MW all the substation transformers are overloaded. Construction of a new 115-13.2kV substation near Gateway Substation will be used to relieve loading on the overloaded transformers.

Case S2-C03 shows that with the second 115kV line from Gateway Substation to Valencia Substation that about 160MW can be served within the planning criteria minimum voltage of 0.950. This is under normal operating conditions without any system outages.

Case S2-C03A – Outage Nogales Switchyard to Kantor Substation Line

Case S2-C02 with an outage of the Nogales Switchyard to Kantor Substation line and the Santa Cruz District load increased until a 0.920 per unit voltage is reached at one of the 115kV buses at Kantor, Canez, Sonoita, or Valencia substations. The 0.920 per unit voltage is the planning criteria voltage with a single contingency outage. This voltage minimum is reached at about 138MW. The voltage at Kantor Substation is 105.8kV (0.920 per unit).

The heaviest loaded lines are the Gateway Substation to Valencia Substation and the 4/0 ACSR line into Valencia Substation at about 115% of their thermal capacity ratings. At about 80MW the Valencia Substation transformers start to become overloaded and at 138MW all the substation transformers are overloaded. Construction of a new 115-13.2kV substation near Gateway Substation will be used to relieve loading on the overloaded transformers.

Case S2-C03A shows that the system with the addition of the Gateway Substation to Valencia Substation line can adequately serve up to 138MW of Santa Cruz District load with an outage of the Nogales Switchyard to Kantor Substation 115kV line. The Gateway Substation to Valencia Substation and the 4/0 ACSR line into Valencia Substation become overloaded and substation transformers are overloaded.

Case S2-C03A1 – Outage Nogales Switchyard to Kantor Substation Line

Case S2-C03A with the loads reduced until the Gateway Substation to Valencia Substation and the 4/0 ACSR line into Valencia Substation at loaded to about 100% of their thermal capacity ratings.

Case S2-C03A1 shows that the system with the addition of the Gateway Substation to Valencia Substation line can adequately serve up to 125MW of Santa Cruz District load with an outage of the Nogales Switchyard to Kantor Substation 115kV line without overloading the Gateway Substation to Valencia Substation line and the 4/0 ACSR line into Valencia Substation.

Case S2-C03B – Outage 4/0 ACSR Line into Valencia Substation

Case S2-C02 with an outage of the 4/0 ACSR line into Valencia Substation and the Santa Cruz District load increased until a 0.920 per unit voltage is reached at one of the 115kV buses at Kantor, Canez, Sonoita, or Valencia substations. The 0.920 per unit voltage is the planning criteria voltage with a single contingency outage. This voltage minimum is reached at about 100MW. As is shown in Case S2-C02B.

Case S2-C04 – Outage Gateway Substation to Valencia Substation Line 25Mvar Capacitance Added at Valencia and Sonoita Substations

This is Case S2-C01B with 25Mvar capacitor banks added at Valencia and Sonoita substations and the Gateway Substation to Valencia Substation 115kV line outaged. The Santa Cruz District Load is increased to 100MW. The 115kV voltage at Valencia Substation is 105.2kV (0.915 per unit). The Santa Cruz District losses are 14.16MW or about 14%.

The Nogales Switchyard to Kantor Substation and the 4/0 ACSR into Valencia Substation 115kV lines are loaded to about 75% of their thermal capacity ratings. The transformers at Valencia Substation are loaded greater than 100%. Construction of a new 115-13.2kV substation near Gateway Substation will be used to relieve loading on the Valencia Substation transformers.

Case S2-C04 shows that adding 25Mvar of capacitance at Valencia and Sonoita substations allows up to 100MW to be served within the planning criteria minimum voltage of 0.920 per unit for a single contingency outage.

Scenario 2 Summary

Existing System with the addition of the Gateway Substation and Gateway to Valencia Substation 115kV Line

The Scenario 2 power flow cases show that the system can serve up to 100MW of load under normal system operation (all lines in-service) and for the single contingency outages within the planning criteria minimum voltage levels.

The system has low voltage levels with an outage of the Gateway Substation to Valencia Substation with 60MW of load without the addition of capacitors. The Scenario 1 cases are the system with the Gateway Substation to Valencia Substation line out-of-service.

As shown in the Scenario 1 cases adding capacitor banks at Valencia or Sonoita substations will improve the system voltage.

Up to 160MW of Santa Cruz District load can be served with all lines in-service. At about 80MW the Valencia Substation transformers start to become overloaded and at 160MW all the substation transformers are overloaded. Construction of a new 115-13.2kV substation near Gateway Substation will be used to relieve loading on the overloaded transformers.

Up to 138MW of Santa Cruz District load can be served with an outage of the Nogales Switchyard to Kantor Substation 115kV line. The Gateway Substation to Valencia Substation and the 4/0 ACSR line into Valencia Substation become overloaded. The substation transformers are also overloaded. Up to 125MW of load can be served without overloading the Gateway Substation to Valencia Substation line and the 4/0 ACSR line into Valencia Substation for an outage of the Nogales Switchyard to Kantor Substation line.

TABLE 4 – SCENARIO 2

Existing System with the Addition of the Gateway Substation and Gateway to Valencia Substation 115kV Line

Case	Description Santa Cruz District Load	Lowest 115kV Voltage (Location/Voltage)	Heaviest Loaded 115kV Line (Line/Loading)	Santa Cruz District Losses
S2-C01	60MW Load	Sonoita Substation 115.4kV (1.004 pu)	Nogales Switchyard-Kantor Substation 30% Loaded	6.89MW
S2-C01A	60MW Load Outage Nogales Switchyard to Kantor Substation Line	Kantor Substation 113.9kV (0.990 pu)	Gateway Substation-Valencia Substation 45% Loaded	5.81MW
S2-C01B	60MW Load Outage Gateway Substation to Valencia Substation Line (Same as Case S1-C01)	Valencia Substation 100.2kV (0.871 pu)	4/0 ACSR into Valencia Substation 50% Loaded	9.21MW
S2-C01C	60MW Load Outage 4/0 ACSR line into Valencia Substation	Sonoita Substation 113.0kV (0.982 pu)	Gateway Substation-Valencia Substation 22% Loaded	6.12MW
S2-C02	100MW Load	Sonoita Substation 114.3kV (0.994 pu)	Gateway Substation-Valencia Substation 45% Loaded	8.38MW
S2-C02A	100MW Load Outage Nogales Switchyard to Kantor Substation Line	Kantor Substation 111.5kV (0.970 pu)	Gateway Substation-Valencia Substation 80% Loaded	7.09MW
S2-C02B	100MW Load Outage 4/0 ACSR line into Valencia Substation	Sonoita Substation 105.7kV (0.919 pu)	Nogales Switchyard-Kantor Substation 40% Loaded	8.02MW

Case	Description Santa Cruz District Load	Lowest 115kV Voltage (Location/Voltage)	Heaviest Loaded 115kV Line (Line/Loading)	Santa Cruz District Losses
S2-C03	159MW Load Load added until voltage is 0.95 pu	Sonoita Substation 109.4kV (0.951 pu)	Gateway Substation-Valencia Substation 85% Loaded	11.75MW
S2-C03A	138MW Load Outage Nogales Switchyard to Kantor Substation Line Load added until voltage 0.92 pu	Kantor Substation 105.8kV (0.920 pu)	Gateway Substation-Valencia Substation 115% Loaded	9.21MW
S2-C03A1	125MW Load Outage Nogales Switchyard to Kantor Substation Line Load added until lines 100%	Kantor Substation 111.4kV (0.968 pu)	Gateway Substation-Valencia Substation 100% Loaded	8.21MW
S2-C03B	100MW Load Outage 4/0 ACSR line into Valencia Substation Load added until voltage 0.92 pu (Case S2-C02B)	Sonoita Substation 105.7kV (0.919 pu)	Nogales Switchyard-Kantor Substation 40% Loaded	8.02MW
S2-C04	100MW Load 25Mvar Capacitors at Valencia and Sonoita Substations Outage Gateway Substation to Valencia Substation Line	Valencia Substation 105.2kV (0.915 pu)	Nogales Switchyard-Kantor Substation 75% Loaded	14.16MW

APPENDIX A- Computer Model Verification Cases
Power Flow Diagrams

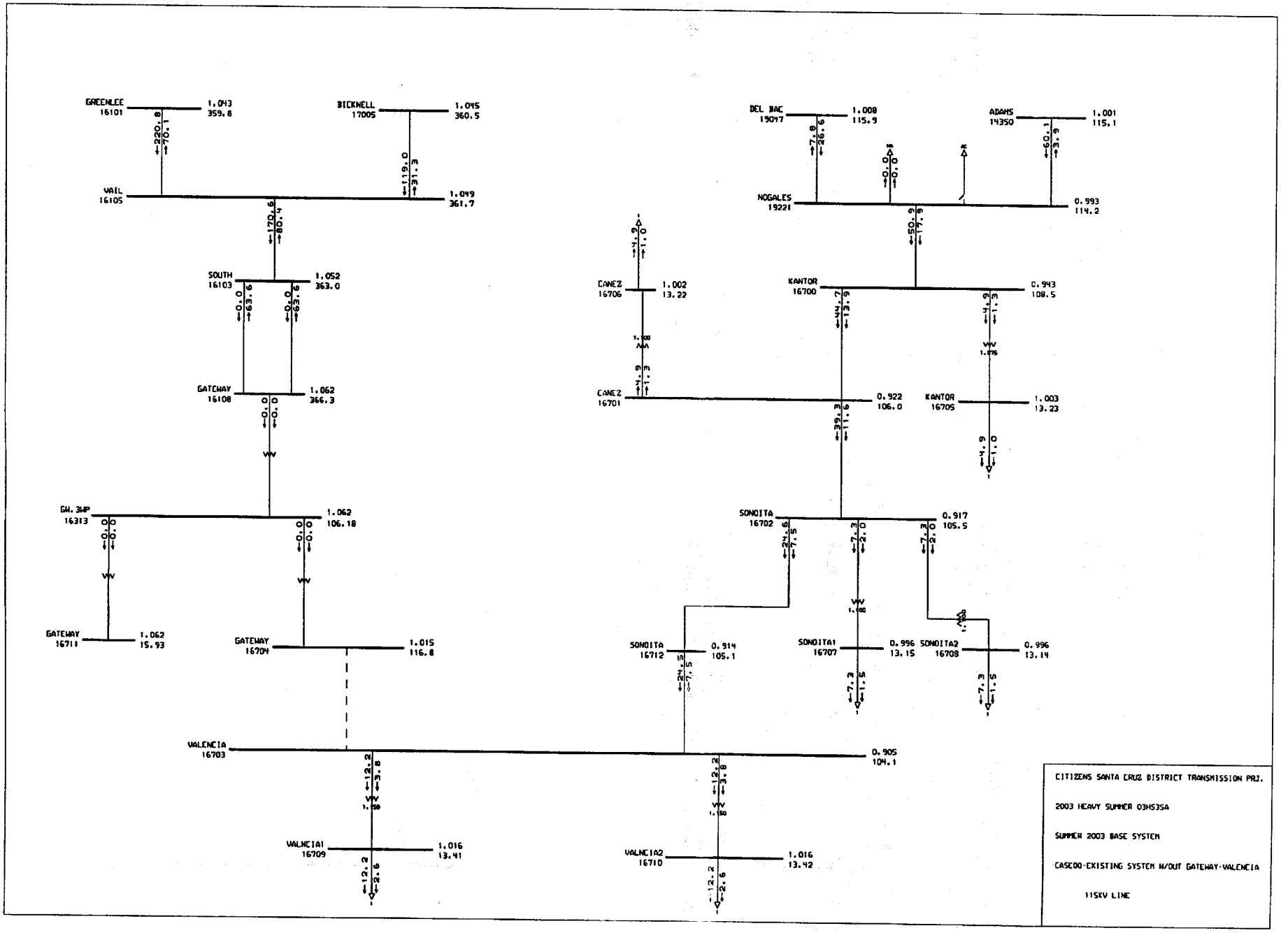
GREENLEE 16101 1.043 359.8
BICKNELL 17005 1.045 360.5
VAIL 16105 1.049 361.7
SOUTH 16103 1.052 363.0
GATEWAY 16108 1.062 366.3
GW.3WP 16313 1.062 106.18
GATEWAY 16711 1.062 15.93
GATEWAY 16704 1.015 116.8
VALENCIA 16703 0.905 104.1
VALNCIA1 16709 1.016 13.41
VALNCIA2 16710 1.016 13.42
DEL BAC 19047 1.008 115.9
ADAMS 14350 1.001 115.1
NOGALES 19221 0.993 114.2
CANEZ 16706 1.002 13.22
KANTOR 16700 0.943 108.5
CANEZ 16701 0.922 106.0
KANTOR 16705 1.003 13.23
SONOITA 16702 0.917 105.5
SONOITA 16712 0.914 105.1
SONOITA1 16707 0.996 13.15
SONOITA2 16708 0.996 13.14
CITIZENS SANTA CRUZ DISTRICT TRANSMISSION PRJ.
2003 HEAVY SUMMER 03HS3SA
SUMMER 2003 BASE SYSTEM
CASE00-EXISTING SYSTEM W/OUT GATEWAY-VALENCIA
115KV LINE

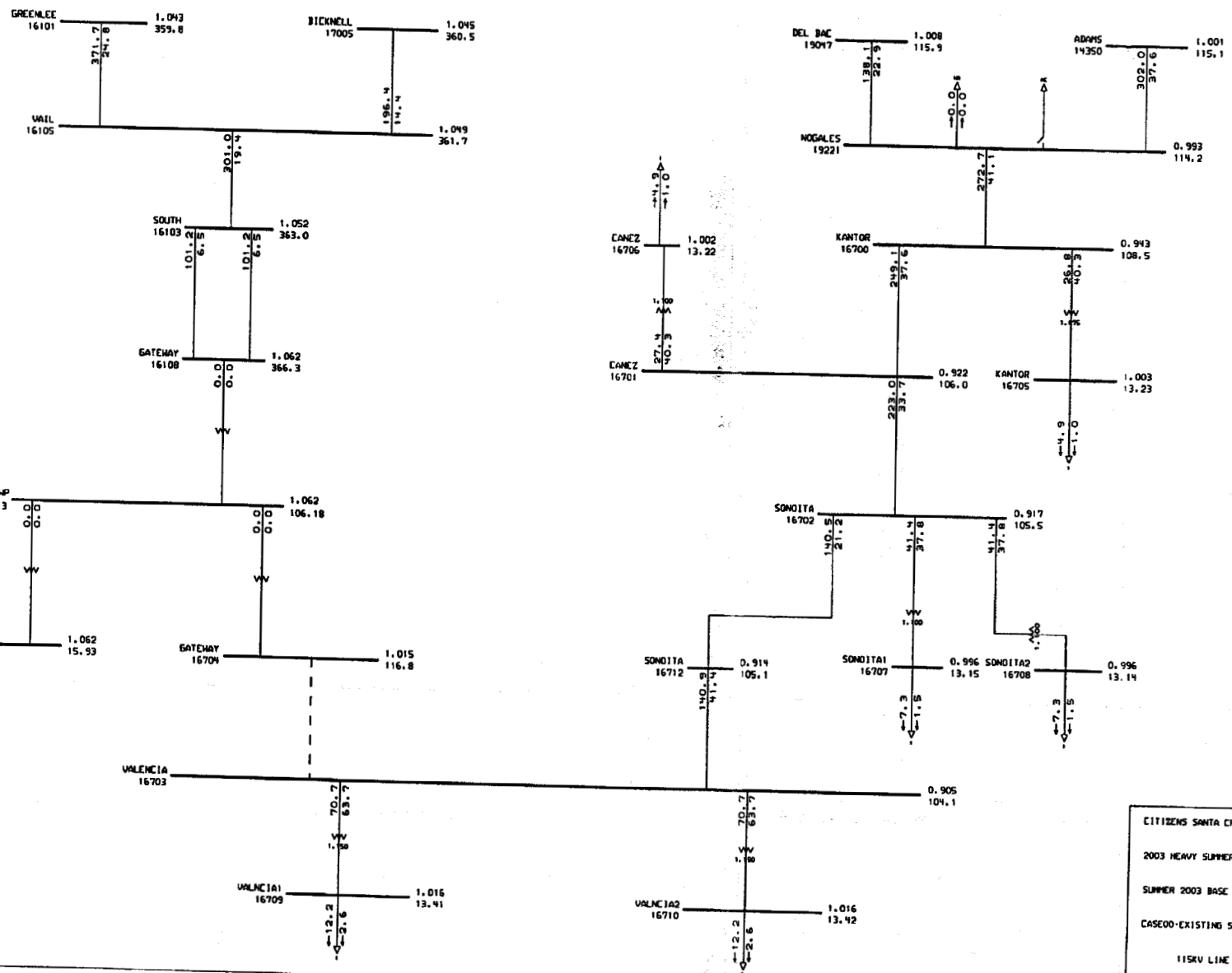
GREENLEE 16101 1.043 359.8
BICKNELL 17005 1.045 360.5
VAIL 16105 1.049 361.7
SOUTH 16103 1.052 363.0
GATEWAY 16108 1.062 366.3
GW. 3HP 16313 1.062 106.18
GATEWAY 16711 1.062 15.93
GATEWAY 16704 1.015 116.8
VALENCIA 16703 0.905 104.1
VALNCIA1 16709 1.016 13.41
VALNCIA2 16710 1.016 13.42
DEL BAC 19047 1.008 115.9
ADAMS 14350 1.001 115.1
NOGALES 19221 0.993 114.2
CANEZ 16706 1.002 13.22
KANTOR 16700 0.943 108.5
CANEZ 16701 0.922 106.0
KANTOR 16705 1.003 13.23
SONOITA 16702 0.917 105.5
SONOITA 16712 0.914 105.1
SONOITA1 16707 0.996 13.15
SONOITA2 16708 0.996 13.14
CITIZENS SANTA CRUZ DISTRICT TRANSMISSION PRJ.
2003 HEAVY SUMMER D3HS35A
SUMMER 2003 BASE SYSTEM
CASE00-EXISTING SYSTEM W/OUT GATEWAY-VALENCIA
115KV LINE

WESTERN SYSTEMS COORDINATING COUNCIL
2003 HS3-SA APPROVED BASE CASE

--From-	--NAME--	--KV--	---To--	--NAME--	--KV--	CK	---P---	---Q---	--MVA--	-AMPS--	-%rate-	-rate--	unit	-Af	-At	-Ar	-Zf	-Zt	-Zo	-Ploss
16703	VALENCIA	115.00	16709	VALNCIA1	13.20	1	12.2	3.8	12.7	70.7	63.7	20.0	Mva	14	14	14	10	10	10	0.0
16703	VALENCIA	115.00	16710	VALNCIA2	13.20	1	12.2	3.8	12.7	70.7	63.7	20.0	Mva	14	14	14	10	10	10	-0.0
16101	GREENLEE	345.00	16104	SPRINGR	345.00	1	-361.7	53.3	365.6	586.7	47.9	1246.7	Amp	14	14	14	10	160	160	6.3
16700	KANTOR	115.00	19221	NOGALES	115.00	1	-49.6	-15.2	51.8	275.8	41.6	662.7	Amp	14	14	14	10	10	10	1.3
16703	VALENCIA	115.00	16712	SONOITA	115.00	1	-24.3	-7.6	25.5	141.4	41.6	340.0	Amp	14	14	14	10	10	10	0.1
16701	CANEZ	115.00	16706	CANEZ	13.20	1	4.9	1.3	5.0	27.4	40.3	12.5	Mva	14	14	14	10	10	10	0.0
16700	KANTOR	115.00	16705	KANTOR	13.20	1	4.9	1.3	5.0	26.8	40.3	12.5	Mva	14	14	14	10	10	10	-0.0
16702	SONOITA	115.00	16708	SONOITA2	13.20	1	7.3	2.0	7.6	41.4	37.8	20.0	Mva	14	14	14	10	10	10	0.0
16702	SONOITA	115.00	16707	SONOITA1	13.20	1	7.3	2.0	7.6	41.4	37.8	20.0	Mva	14	14	14	10	10	10	0.0
16700	KANTOR	115.00	16701	CANEZ	115.00	1	44.7	13.9	46.8	249.1	37.8	662.7	Amp	14	14	14	10	10	10	0.5
14350	ADAMS	115.00	19221	NOGALES	115.00	1	60.1	-3.9	60.2	302.0	37.6	803.3	Amp	14	14	14	10	10	140	1.3
16103	SOUTH	345.00	16306	SO.3WP2	100.00	1	242.2	28.4	243.9	387.9	36.4	672.0	Mva	14	14	14	10	160	160	0.1
16701	CANEZ	115.00	16702	SONOITA	115.00	1	39.3	11.6	40.9	223.0	33.7	662.7	Amp	14	14	14	10	10	10	0.1
16105	VAIL	345.00	16308	VAIL.3WP	100.00	1	166.6	82.2	185.7	296.4	27.9	672.0	Mva	14	14	14	10	160	160	0.0
16101	GREENLEE	345.00	16105	VAIL	345.00	1	220.8	-70.1	231.7	371.7	24.8	1499.4	Amp	14	14	14	10	10	160	2.6
19047	DEL BAC	115.00	19221	NOGALES	115.00	1	-7.8	26.6	27.7	138.1	23.6	602.5	Amp	14	14	14	10	10	140	0.0
16702	SONOITA	115.00	16712	SONOITA	115.00	1	24.6	7.5	25.7	140.5	21.3	662.7	Amp	14	14	14	10	10	10	0.0
16103	SOUTH	345.00	16107	WESTWING	345.00	1	-71.9	29.9	77.8	123.8	20.6	1124.6	Amp	14	14	14	10	160	160	0.5
16103	SOUTH	345.00	16105	VAIL	345.00	1	-170.4	68.9	183.8	292.3	19.4	1548.0	Amp	14	14	14	10	10	160	0.2
19047	DEL BAC	115.00	19064	TUCSON	115.00	1	1.8	-18.9	18.9	94.4	15.7	602.5	Amp	14	14	14	10	191	191	0.0
16105	VAIL	345.00	17005	BICKNELL	345.00	1	-119.0	31.3	123.1	196.4	15.2	1365.1	Amp	14	14	14	10	10	170	0.1
16101	GREENLEE	345.00	17010	GREEN-AE	345.00	1	-89.1	21.2	91.6	146.9	10.8	1365.1	Amp	14	14	14	10	170	170	0.0
19047	DEL BAC	115.00	19201	BLACKMTN	115.00	1	6.0	-7.8	9.8	48.7	8.1	602.5	Amp	14	14	14	10	140	140	0.0
16103	SOUTH	345.00	16108	GATEWAY	345.00	2	0.0	-63.6	63.6	101.2	6.5	1548.0	Amp	14	14	4	10	10	160	0.0
16103	SOUTH	345.00	16108	GATEWAY	345.00	1	0.0	-63.6	63.6	101.2	6.5	1548.0	Amp	14	14	4	10	10	160	0.0
16313	GW.3WP	100.00	16704	GATEWAY	115.00	1	0.0	0.0	0.0	0.0	0.0	100.0	Mva	14	14	14	10	10	161	-0.0
16108	GATEWAY	345.00	16313	GW.3WP	100.00	1	0.0	0.0	0.0	0.0	0.0	100.0	Mva	14	14	14	10	10	161	0.0
16313	GW.3WP	100.00	16711	GATEWAY	15.00	1	0.0	0.0	0.0	0.0	0.0	100.0	Mva	14	14	14	10	10	161	0.0
14350	ADAMS	115.00	17001	APACHE	115.00	1	-91.5	-5.5	91.6	459.7	0.0	0.0	Amp	14	14	14	10	170	191	1.2

WESTERN SYSTEMS COORDINATING COUNCIL
2003 HS3-SA APPROVED BASE CASE

Zone	Zone_name	Loss_mw
10	SANTA CRUZ	7.96

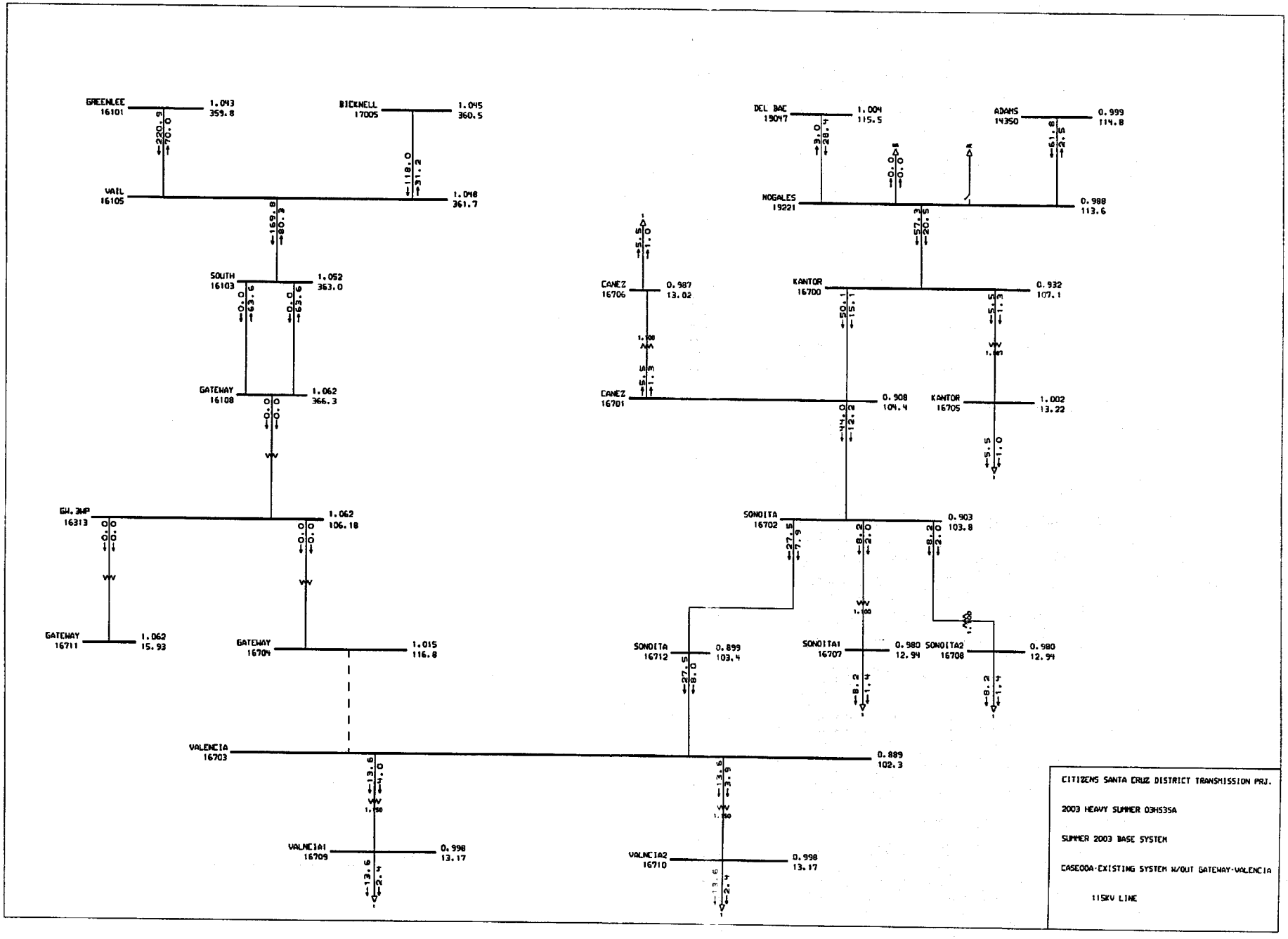
GREENLEE 16101 1.043 359.8
BICKNELL 17005 1.045 360.5
VAIL 16105 1.048 361.7
SOUTH 16103 1.052 363.0
GATEWAY 16108 1.062 366.3
GW.3WP 16313 1.062 106.18
GATEWAY 16711 1.062 15.93
GATEWAY 16704 1.015 116.8
VALENCIA 16703 0.889 102.3
VALNCIA1 16709 0.998 13.17
VALNCIA2 16710 0.998 13.17
DEL BAC 19047 1.004 115.5
ADAMS 14350 0.999 114.8
NOGALES 19221 0.988 113.6
CANEZ 16706 0.987 13.02
KANTOR 16700 0.932 107.1
CANEZ 16701 0.908 104.4
KANTOR 16705 1.002 13.22
SONOITA 16702 0.903 103.8
SONOITA 16712 0.899 103.4
SONOITA1 16707 0.980 12.94
SONOITA2 16708 0.980 12.94
CITIZENS SANTA CRUZ DISTRICT TRANSMISSION PRJ.
2003 HEAVY SUMMER 03HS35A
SUMMER 2003 BASE SYSTEM
CASE00A-EXISTING SYSTEM W/OUT GATEWAY-VALENCIA
115KV LINE

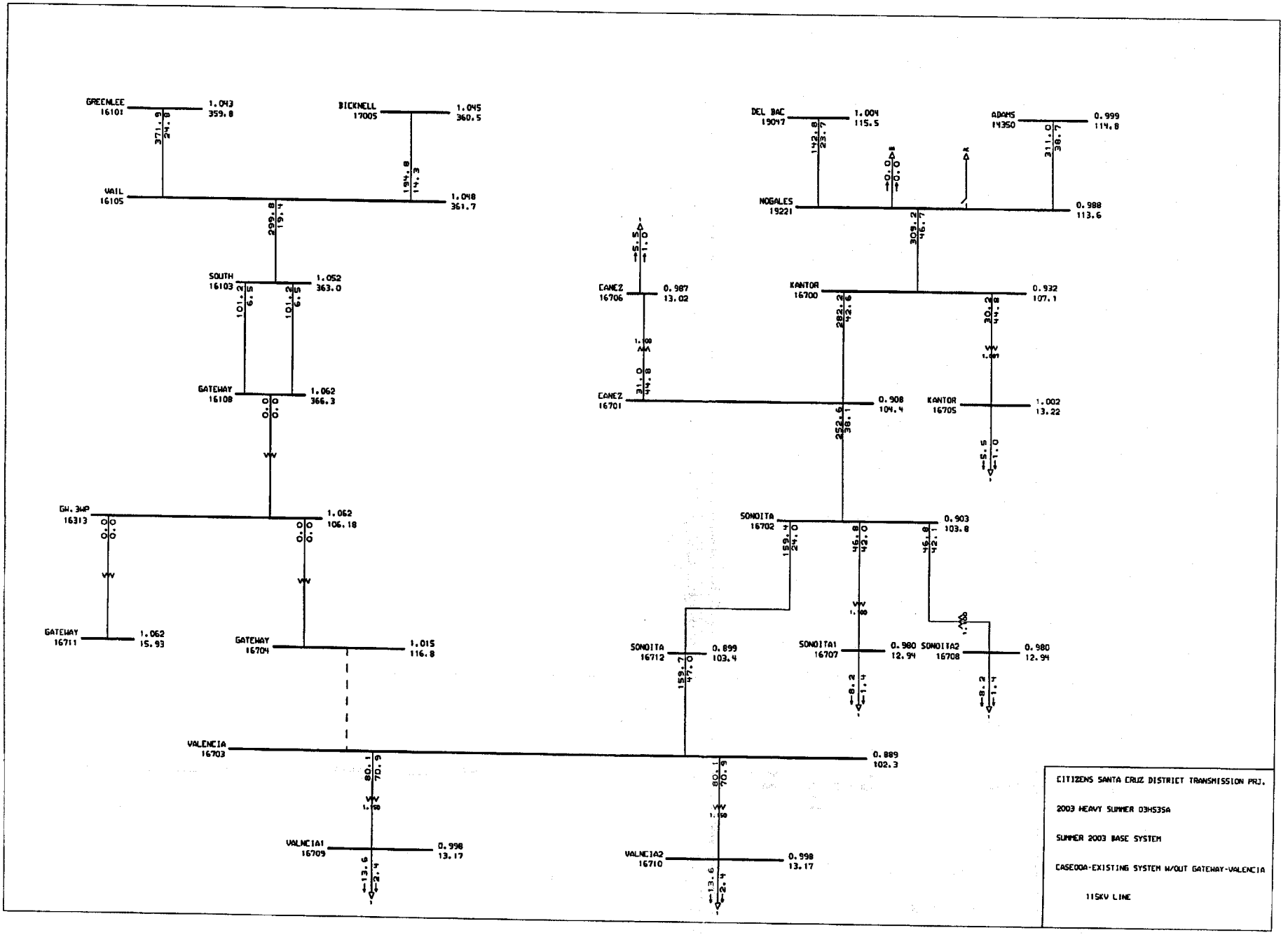
GREENLEE 16101 1.043 359.8
BICKNELL 17005 1.045 360.5
VAIL 16105 1.048 361.7
SOUTH 16103 1.052 363.0
GATEWAY 16108 1.062 366.3
GW.3WP 16313 1.062 106.18
GATEWAY 16711 1.062 15.93
GATEWAY 16704 1.015 116.8
VALENCIA 16703 0.889 102.3
VALNCIA1 16709 0.998 13.17
VALNCIA2 16710 0.998 13.17
DEL BAC 19047 1.004 115.5
ADAMS 14350 0.999 114.8
NOGALES 19221 0.988 113.6
CANEZ 16706 0.987 13.02
KANTOR 16700 0.932 107.1
CANEZ 16701 0.908 104.4
KANTOR 16705 1.002 13.22
SONOITA 16702 0.903 103.8
SONOITA 16712 0.899 103.4
SONOITA1 16707 0.980 12.94
SONOITA2 16708 0.980 12.94
CITIZENS SANTA CRUZ DISTRICT TRANSMISSION PRJ.
2003 HEAVY SUMMER 03HS3SA
SUMMER 2003 BASE SYSTEM
CASE00A-EXISTING SYSTEM W/OUT GATEWAY-VALENCIA
115KV LINE

WESTERN SYSTEMS COORDINATING COUNCIL
2003 HS3-SA APPROVED BASE CASE

--From-	--NAME--	--KV--	---To--	--NAME--	--KV--	CK	---P---	---Q---	--MVA--	-AMPS--	-%rate-	-rate--	unit	-Af	-At	-Ar	-Zf	-Zt	-Zo	-Ploss
16703	VALENCIA	115.00	16709	VALNCIA1	13.20	1	13.6	4.0	14.2	80.1	70.9	20.0	Mva	14	14	14	10	10	10	-0.0
16703	VALENCIA	115.00	16710	VALNCIA2	13.20	1	13.6	3.9	14.2	80.1	70.9	20.0	Mva	14	14	14	10	10	10	-0.0
16101	GREENLEE	345.00	16104	SPRINGR	345.00	1	-362.3	53.5	366.3	587.8	48.0	1246.7	Amp	14	14	14	10	160	160	6.3
16700	KANTOR	115.00	19221	NOGALES	115.00	1	-55.6	-16.4	58.0	312.4	47.1	662.7	Amp	14	14	14	10	10	10	1.7
16703	VALENCIA	115.00	16712	SONOITA	115.00	1	-27.3	-7.9	28.4	160.2	47.1	340.0	Amp	14	14	14	10	10	10	0.2
16701	CANEZ	115.00	16706	CANEZ	13.20	1	5.5	1.3	5.6	31.0	44.8	12.5	Mva	14	14	14	10	10	10	-0.0
16700	KANTOR	115.00	16705	KANTOR	13.20	1	5.5	1.3	5.6	30.2	44.8	12.5	Mva	14	14	14	10	10	10	0.0
16700	KANTOR	115.00	16701	CANEZ	115.00	1	50.1	15.1	52.4	282.3	42.8	662.7	Amp	14	14	14	10	10	10	0.6
16702	SONOITA	115.00	16708	SONOITA2	13.20	1	8.2	2.0	8.4	46.8	42.1	20.0	Mva	14	14	14	10	10	10	0.0
16702	SONOITA	115.00	16707	SONOITA1	13.20	1	8.2	2.0	8.4	46.8	42.0	20.0	Mva	14	14	14	10	10	10	-0.0
14350	ADAMS	115.00	19221	NOGALES	115.00	1	61.8	-2.5	61.9	311.0	38.7	803.3	Amp	14	14	14	10	10	140	1.4
16701	CANEZ	115.00	16702	SONOITA	115.00	1	44.0	12.2	45.7	252.6	38.2	662.7	Amp	14	14	14	10	10	10	0.1
16103	SOUTH	345.00	16306	SO.3WP2	100.00	1	242.3	28.5	244.0	388.1	36.4	672.0	Mva	14	14	14	10	160	160	0.1
16105	VAIL	345.00	16308	VAIL.3WP	100.00	1	166.5	82.2	185.7	296.3	27.9	672.0	Mva	14	14	14	10	160	160	0.0
16101	GREENLEE	345.00	16105	VAIL	345.00	1	220.9	-70.0	231.8	371.9	24.8	1499.4	Amp	14	14	14	10	10	160	2.6
19047	DEL BAC	115.00	19221	NOGALES	115.00	1	-3.0	28.4	28.6	142.8	24.4	602.5	Amp	14	14	14	10	10	140	0.0
16702	SONOITA	115.00	16712	SONOITA	115.00	1	27.5	7.9	28.7	159.4	24.1	662.7	Amp	14	14	14	10	10	10	0.0
16103	SOUTH	345.00	16107	WESTWING	345.00	1	-72.8	30.0	78.7	125.2	20.7	1124.6	Amp	14	14	14	10	160	160	0.5
16103	SOUTH	345.00	16105	VAIL	345.00	1	-169.6	68.8	183.1	291.2	19.4	1548.0	Amp	14	14	14	10	10	160	0.2
19047	DEL BAC	115.00	19064	TUCSON	115.00	1	-1.4	-20.0	20.1	100.4	16.7	602.5	Amp	14	14	14	10	191	191	0.0
16105	VAIL	345.00	17005	BICKNELL	345.00	1	-118.0	31.2	122.1	194.8	15.1	1365.1	Amp	14	14	14	10	10	170	0.1
16101	GREENLEE	345.00	17010	GREEN-AE	345.00	1	-88.2	21.0	90.7	145.5	10.7	1365.1	Amp	14	14	14	10	170	170	0.0
19047	DEL BAC	115.00	19201	BLACKMTN	115.00	1	4.4	-8.4	9.5	47.3	7.9	602.5	Amp	14	14	14	10	140	140	0.0
16103	SOUTH	345.00	16108	GATEWAY	345.00	2	0.0	-63.6	63.6	101.2	6.5	1548.0	Amp	14	14	4	10	10	160	0.0
16103	SOUTH	345.00	16108	GATEWAY	345.00	1	0.0	-63.6	63.6	101.2	6.5	1548.0	Amp	14	14	4	10	10	160	0.0
16313	GW.3WP	100.00	16704	GATEWAY	115.00	1	-0.0	0.0	0.0	0.0	0.0	100.0	Mva	14	14	14	10	10	161	0.0
16108	GATEWAY	345.00	16313	GW.3WP	100.00	1	0.0	0.0	0.0	0.0	0.0	100.0	Mva	14	14	14	10	10	161	-0.0
14350	ADAMS	115.00	17001	APACHE	115.00	1	-93.2	-6.9	93.5	469.9	0.0	0.0	Amp	14	14	14	10	170	191	1.3
16313	GW.3WP	100.00	16711	GATEWAY	15.00	1	0.0	0.0	0.0	0.0	0.0	100.0	Mva	14	14	14	10	10	161	0.0

WESTERN SYSTEMS COORDINATING COUNCIL
2003 HS3-SA APPROVED BASE CASE

Zone	Zone_name	Loss_mw
10	SANTA CRUZ	8.73

APPENDIX B- Scenario 1 Power Flow Cases
Power Flow Diagrams

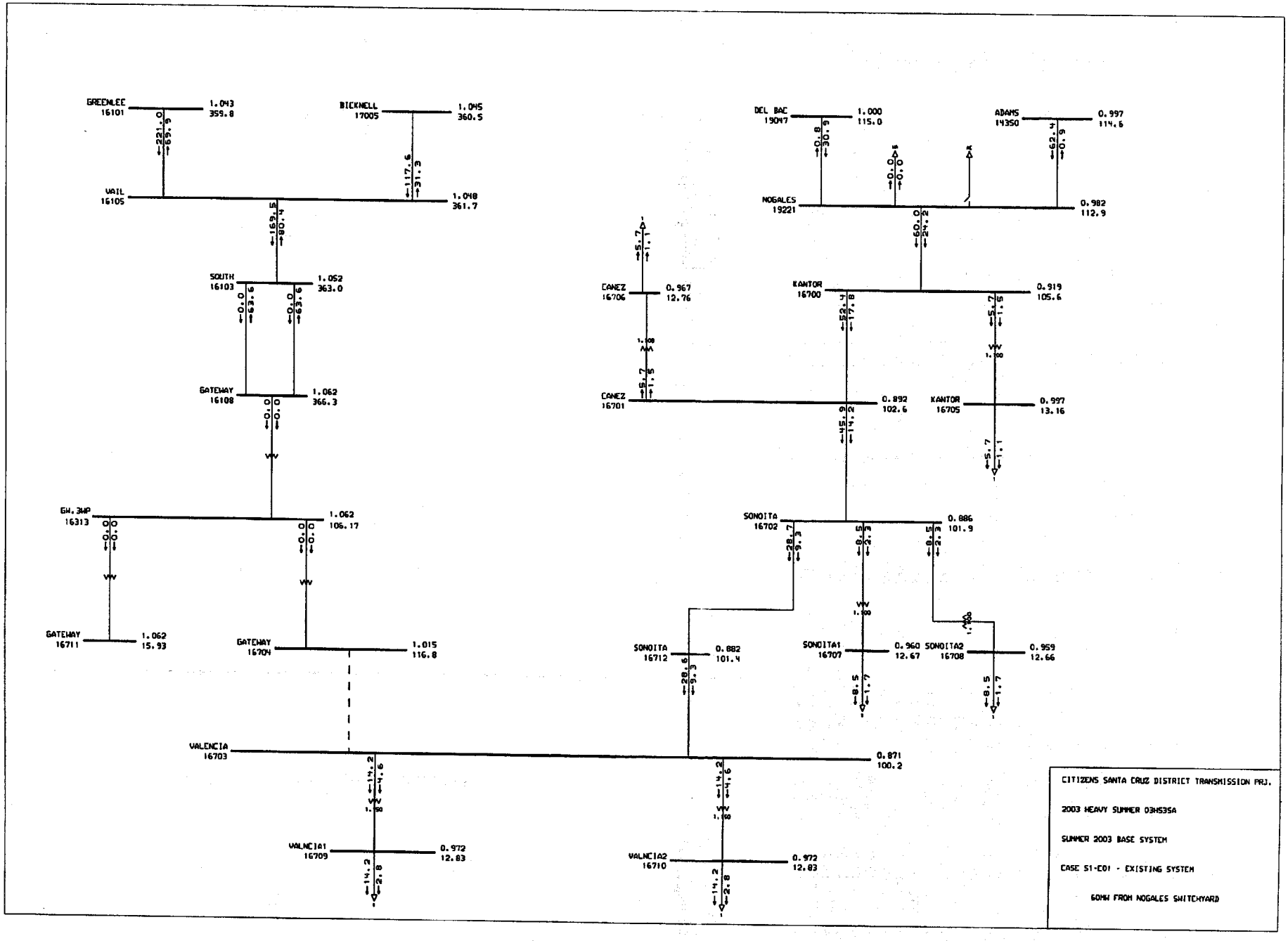
GREENLEE 16101 1.043 359.8
BICKNELL 17005 1.045 360.5
VAIL 16105 1.048 361.7
SOUTH 16103 1.052 363.0
GATEWAY 16108 1.062 366.3
GW.3WP 16313 1.062 106.17
GATEWAY 16711 1.062 15.93
GATEWAY 16704 1.015 116.8
VALENCIA 16703 0.871 100.2
VALNCIA1 16709 0.972 12.83
VALNCIA2 16710 0.972 12.83
DEL BAC 19047 1.000 115.0
ADAMS 14350 0.997 114.6
NOGALES 19221 0.982 112.9
CANEZ 16706 0.967 12.76
KANTOR 16700 0.919 105.6
CANEZ 16701 0.892 102.6
KANTOR 16705 0.997 13.16
SONOITA 16702 0.886 101.9
SONOITA 16712 0.882 101.4
SONOITA1 16707 0.960 12.67
SONOITA2 16708 0.959 12.66
CITIZENS SANTA CRUZ DISTRICT TRANSMISSION PRJ.
2003 HEAVY SUMMER 03HS3SA
SUMMER 2003 BASE SYSTEM
CASE S1-E01 - EXISTING SYSTEM
60MW FROM NOGALES SWITCHYARD

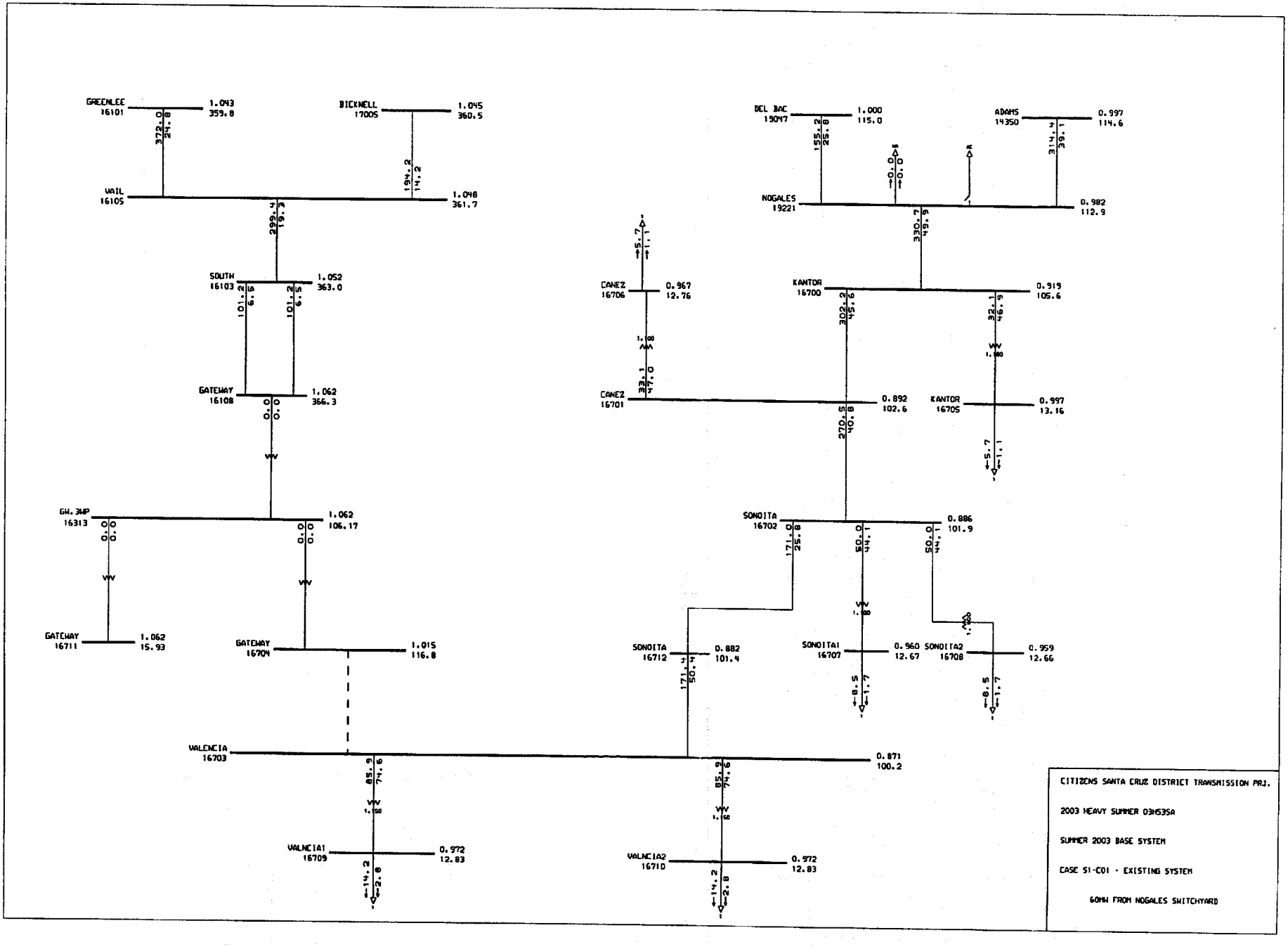
GREENLEE 16101 1.043 359.8
BICKNELL 17005 1.045 360.5
VAIL 16105 1.048 361.7
SOUTH 16103 1.052 363.0
GATEWAY 16108 1.062 366.3
GW.3WP 16313 1.062 106.17
GATEWAY 16711 1.062 15.93
GATEWAY 16704 1.015 116.8
VALENCIA 16703 0.871 100.2
VALNCIA1 16709 0.972 12.83
VALNCIA2 16710 0.972 12.83
DEL BAC 19047 1.000 115.0
ADAMS 19350 0.997 114.6
NOGALES 19221 0.982 112.9
CANEZ 16706 0.967 12.76
KANTOR 16700 0.919 105.6
CANEZ 16701 0.892 102.6
KANTOR 16705 0.997 13.16
SONOITA 16702 0.886 101.9
SONOITA 16712 0.882 101.4
SONOITA1 16707 0.960 12.67
SONOITA2 16708 0.959 12.66
CITIZENS SANTA CRUZ DISTRICT TRANSMISSION PRJ.
2003 HEAVY SUMMER 03HS35A
SUMMER 2003 BASE SYSTEM
CASE S1-C01 - EXISTING SYSTEM
60MW FROM NOGALES SWITCHYARD

WESTERN SYSTEMS COORDINATING COUNCIL
2003 HS3-SA APPROVED BASE CASE

--From-	--NAME--	--KV--	---To--	--NAME--	--KV--	CK	---P---	---Q---	--MVA--	-AMPS--	-%rate-	-rate--	unit	-Af	-At	-Ar	-Zf	-Zt	-Zo	-Ploss
16703	VALENCIA	115.00	16709	VALNCIA1	13.20	1	14.2	4.6	14.9	85.9	74.6	20.0	Mva	14	14	14	10	10	10	-0.0
16703	VALENCIA	115.00	16710	VALNCIA2	13.20	1	14.2	4.6	14.9	85.9	74.6	20.0	Mva	14	14	14	10	10	10	0.0
16703	VALENCIA	115.00	16712	SONOITA	115.00	1	-28.4	-9.2	29.8	171.9	50.6	340.0	Amp	14	14	14	10	10	10	0.2
16700	KANTOR	115.00	19221	NOGALES	115.00	1	-58.0	-19.2	61.1	334.2	50.4	662.7	Amp	14	14	14	10	10	10	1.9
16101	GREENLEE	345.00	16104	SPRINGR	345.00	1	-362.6	53.5	366.5	588.2	48.1	1246.7	Amp	14	14	14	10	160	160	6.4
16701	CANEZ	115.00	16706	CANEZ	13.20	1	5.7	1.5	5.9	33.1	47.0	12.5	Mva	14	14	14	10	10	10	-0.0
16700	KANTOR	115.00	16705	KANTOR	13.20	1	5.7	1.5	5.9	32.1	46.9	12.5	Mva	14	14	14	10	10	10	0.0
16700	KANTOR	115.00	16701	CANEZ	115.00	1	52.4	17.8	55.3	302.2	45.8	662.7	Amp	14	14	14	10	10	10	0.7
16702	SONOITA	115.00	16708	SONOITA2	13.20	1	8.5	2.3	8.8	50.0	44.1	20.0	Mva	14	14	14	10	10	10	-0.0
16702	SONOITA	115.00	16707	SONOITA1	13.20	1	8.5	2.3	8.8	50.0	44.1	20.0	Mva	14	14	14	10	10	10	-0.0
16701	CANEZ	115.00	16702	SONOITA	115.00	1	45.9	14.2	48.1	270.5	40.9	662.7	Amp	14	14	14	10	10	10	0.1
14350	ADAMS	115.00	19221	NOGALES	115.00	1	62.4	-0.9	62.4	314.4	39.1	803.3	Amp	14	14	14	10	10	140	1.4
16103	SOUTH	345.00	16306	SO.3WP2	100.00	1	242.4	28.4	244.1	388.2	36.4	672.0	Mva	14	14	14	10	160	160	0.1
16105	VAIL	345.00	16308	VAIL.3WP	100.00	1	166.4	82.2	185.6	296.3	27.8	672.0	Mva	14	14	14	10	160	160	0.0
19047	DEL BAC	115.00	19221	NOGALES	115.00	1	-0.8	30.9	30.9	155.2	26.4	602.5	Amp	14	14	14	10	10	140	0.0
16702	SONOITA	115.00	16712	SONOITA	115.00	1	28.7	9.3	30.2	171.0	25.9	662.7	Amp	14	14	14	10	10	10	0.0
16101	GREENLEE	345.00	16105	VAIL	345.00	1	221.0	-69.9	231.8	372.0	24.8	1499.4	Amp	14	14	14	10	10	160	2.6
16103	SOUTH	345.00	16107	WESTWING	345.00	1	-73.1	29.9	79.0	125.7	20.7	1124.6	Amp	14	14	14	10	160	160	0.5
16103	SOUTH	345.00	16105	VAIL	345.00	1	-169.3	68.8	182.8	290.7	19.3	1548.0	Amp	14	14	14	10	10	160	0.2
19047	DEL BAC	115.00	19064	TUCSON	115.00	1	-2.9	-21.7	21.9	109.9	18.2	602.5	Amp	14	14	14	10	191	191	0.0
16105	VAIL	345.00	17005	BICKNELL	345.00	1	-117.6	31.3	121.7	194.2	15.1	1365.1	Amp	14	14	14	10	10	170	0.1
16101	GREENLEE	345.00	17010	GREEN-AE	345.00	1	-87.9	20.9	90.4	145.1	10.7	1365.1	Amp	14	14	14	10	170	170	0.0
19047	DEL BAC	115.00	19201	BLACKMTN	115.00	1	3.7	-9.2	9.9	49.9	8.3	602.5	Amp	14	14	14	10	140	140	0.0
16103	SOUTH	345.00	16108	GATEWAY	345.00	1	0.0	-63.6	63.6	101.2	6.5	1548.0	Amp	14	14	4	10	10	160	0.0
16103	SOUTH	345.00	16108	GATEWAY	345.00	2	0.0	-63.6	63.6	101.2	6.5	1548.0	Amp	14	14	4	10	10	160	0.0
16313	GW.3WP	100.00	16704	GATEWAY	115.00	1	0.0	0.0	0.0	0.0	0.0	100.0	Mva	14	14	14	10	10	161	-0.0
16108	GATEWAY	345.00	16313	GW.3WP	100.00	1	0.0	0.0	0.0	0.0	0.0	100.0	Mva	14	14	14	10	10	161	0.0
14350	ADAMS	115.00	17001	APACHE	115.00	1	-93.8	-8.5	94.2	474.5	0.0	0.0	Amp	14	14	14	10	170	191	1.3
16313	GW.3WP	100.00	16711	GATEWAY	15.00	1	0.0	0.0	0.0	0.0	0.0	100.0	Mva	14	14	14	10	10	161	0.0

WESTERN SYSTEMS COORDINATING COUNCIL
2003 HS3-SA APPROVED BASE CASE

Zone	Zone_name	Loss_mw
10	SANTA CRUZ	9.21

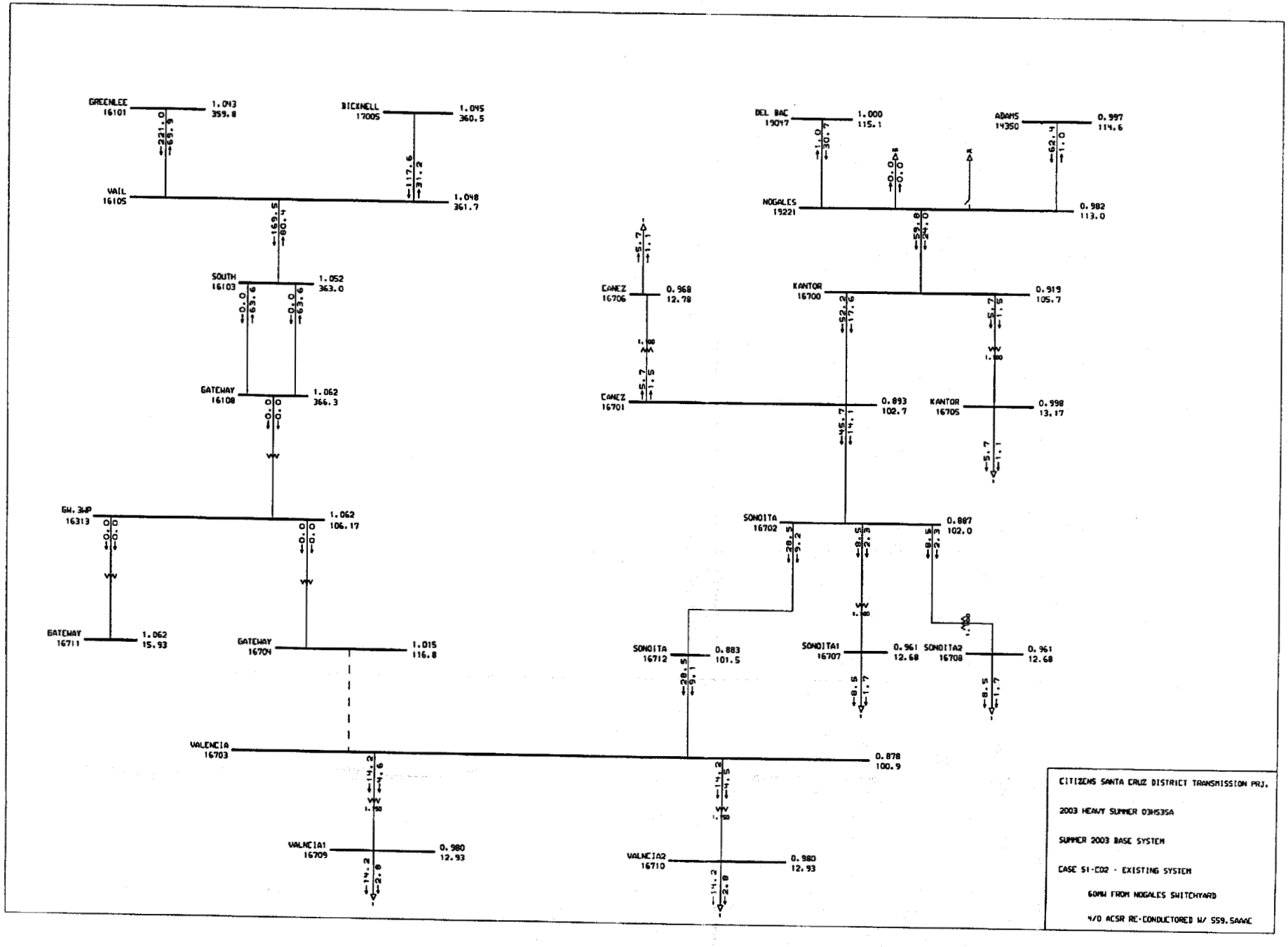
GREENLEE 16101 1.043 359.8
BICKNELL 17005 1.045 360.5
VAIL 16105 1.048 361.7
SOUTH 16103 1.052 363.0
GATEWAY 16108 1.062 366.3
GW. 3WP 16313 1.062 106.17
GATEWAY 16711 1.062 15.93
GATEWAY 16704 1.015 116.8
VALENCIA 16703 0.878 100.9
VALNCIA1 16709 0.980 12.93
VALNCIA2 16710 0.980 12.93
DEL BAC 19047 1.000 115.1
ADAMS 14350 0.997 114.6
NOGALES 19221 0.982 113.0
CANEZ 16706 0.968 12.78
KANTOR 16700 0.919 105.7
CANEZ 16701 0.893 102.7
KANTOR 16705 0.998 13.17
SONOITA 16702 0.887 102.0
SONOITA 16712 0.883 101.5
SONOITA1 16707 0.961 12.68
SONOITA2 16708 0.961 12.68
CITIZENS SANTA CRUZ DISTRICT TRANSMISSION PRJ.
2003 HEAVY SUMMER 03HS35A
SUMMER 2003 BASE SYSTEM
CASE S1-CO2 - EXISTING SYSTEM
60MW FROM NOGALES SWITCHYARD
4/0 ACSR RE-CONDUCTORED W/ 559.5AAAC

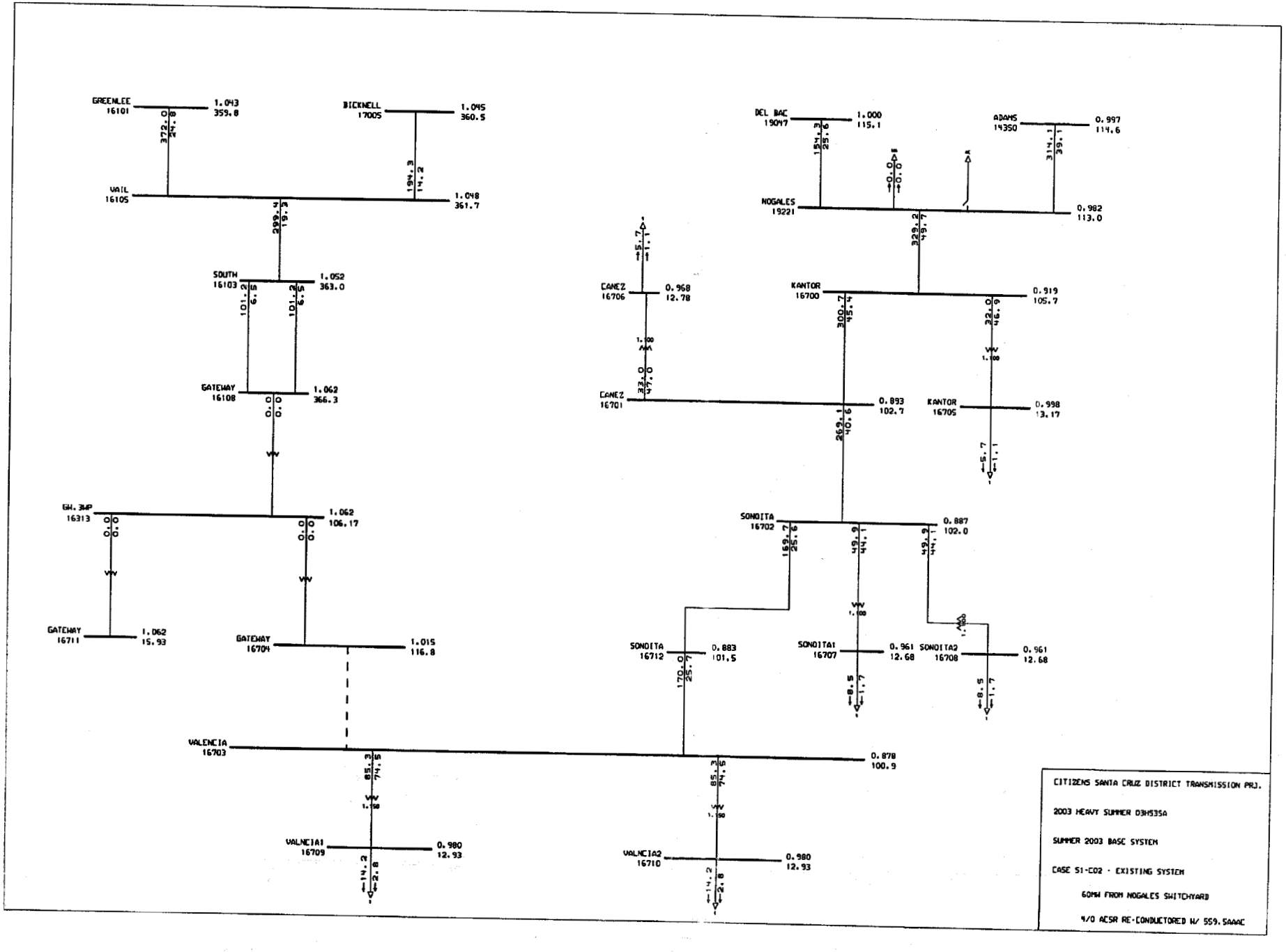
GREENLEE 16101 1.043 359.8
BICKNELL 17005 1.045 360.5
VAIL 16105 1.048 361.7
SOUTH 16103 1.052 363.0
GATEWAY 16108 1.062 366.3
GW. 3WP 16313 1.062 106.17
GATEWAY 16711 1.062 15.93
GATEWAY 16704 1.015 116.8
VALENCIA 16703 0.878 100.9
VALNCIA1 16709 0.980 12.93
VALNCIA2 16710 0.980 12.93
DEL BAC 19047 1.000 115.1
ADAMS 19350 0.997 114.6
NOGALES 19221 0.982 113.0
KANTOR 16700 0.919 105.7
CANEZ 16706 0.968 12.78
CANEZ 16701 0.893 102.7
KANTOR 16705 0.998 13.17
SONOITA 16702 0.887 102.0
SONOITA 16712 0.883 101.5
SONOITA1 16707 0.961 12.68
SONOITA2 16708 0.961 12.68
CITIZENS SANTA CRUZ DISTRICT TRANSMISSION PRJ.
2003 HEAVY SUMMER D3H535A
SUMMER 2003 BASC SYSTEM
CASE S1-C02 - EXISTING SYSTEM
60MW FROM NOGALES SWITCHYARD
4/0 ACSR RE-CONDUCTORED W/ 559.5AAAC

WESTERN SYSTEMS COORDINATING COUNCIL
2003 HS3-SA APPROVED BASE CASE

--From-	--NAME--	--KV--	---To--	--NAME--	--KV--	CK	---P---	---Q---	--MVA--	-AMPS--	-%rate-	-rate--	unit	-Af	-At	-Ar	-Zf	-Zt	-Zo	-Ploss
16703	VALENCIA	115.00	16709	VALNCIA1	13.20	1	14.2	4.6	14.9	85.3	74.5	20.0	Mva	14	14	14	10	10	10	-0.0
16703	VALENCIA	115.00	16710	VALNCIA2	13.20	1	14.2	4.5	14.9	85.3	74.5	20.0	Mva	14	14	14	10	10	10	0.0
16700	KANTOR	115.00	19221	NOGALES	115.00	1	-57.9	-19.0	60.9	332.6	50.2	662.7	Amp	14	14	14	10	10	10	1.9
16101	GREENLEE	345.00	16104	SPRINGR	345.00	1	-362.6	53.5	366.5	588.2	48.1	1246.7	Amp	14	14	14	10	160	160	6.4
16701	CANEZ	115.00	16706	CANEZ	13.20	1	5.7	1.5	5.9	33.0	47.0	12.5	Mva	14	14	14	10	10	10	-0.0
16700	KANTOR	115.00	16705	KANTOR	13.20	1	5.7	1.5	5.9	32.0	46.9	12.5	Mva	14	14	14	10	10	10	-0.0
16700	KANTOR	115.00	16701	CANEZ	115.00	1	52.2	17.6	55.1	300.7	45.6	662.7	Amp	14	14	14	10	10	10	0.7
16702	SONOITA	115.00	16708	SONOITA2	13.20	1	8.5	2.3	8.8	49.9	44.1	20.0	Mva	14	14	14	10	10	10	-0.0
16702	SONOITA	115.00	16707	SONOITA1	13.20	1	8.5	2.3	8.8	49.9	44.1	20.0	Mva	14	14	14	10	10	10	-0.0
16701	CANEZ	115.00	16702	SONOITA	115.00	1	45.7	14.1	47.9	269.1	40.7	662.7	Amp	14	14	14	10	10	10	0.1
14350	ADAMS	115.00	19221	NOGALES	115.00	1	62.4	-1.0	62.4	314.1	39.1	803.3	Amp	14	14	14	10	10	140	1.4
16103	SOUTH	345.00	16306	SO.3WP2	100.00	1	242.4	28.4	244.1	388.2	36.4	672.0	Mva	14	14	14	10	160	160	0.1
16105	VAIL	345.00	16308	VAIL.3WP	100.00	1	166.4	82.2	185.6	296.3	27.8	672.0	Mva	14	14	14	10	160	160	0.0
19047	DEL BAC	115.00	19221	NOGALES	115.00	1	-1.0	30.7	30.8	154.3	26.3	602.5	Amp	14	14	14	10	10	140	0.0
16703	VALENCIA	115.00	16712	SONOITA	115.00	1	-28.4	-9.1	29.8	170.5	25.7	662.7	Amp	14	14	14	10	10	10	0.0
16702	SONOITA	115.00	16712	SONOITA	115.00	1	28.5	9.2	30.0	169.7	25.7	662.7	Amp	14	14	14	10	10	10	0.0
16101	GREENLEE	345.00	16105	VAIL	345.00	1	221.0	-69.9	231.8	372.0	24.8	1499.4	Amp	14	14	14	10	10	160	2.6
16103	SOUTH	345.00	16107	WESTWING	345.00	1	-73.1	29.9	79.0	125.7	20.7	1124.6	Amp	14	14	14	10	160	160	0.5
16103	SOUTH	345.00	16105	VAIL	345.00	1	-169.3	68.8	182.8	290.7	19.3	1548.0	Amp	14	14	14	10	10	160	0.2
19047	DEL BAC	115.00	19064	TUCSON	115.00	1	-2.8	-21.6	21.8	109.2	18.1	602.5	Amp	14	14	14	10	191	191	0.0
16105	VAIL	345.00	17005	BICKNELL	345.00	1	-117.6	31.2	121.7	194.3	15.1	1365.1	Amp	14	14	14	10	10	170	0.1
16101	GREENLEE	345.00	17010	GREEN-AE	345.00	1	-88.0	20.9	90.4	145.1	10.7	1365.1	Amp	14	14	14	10	170	170	0.0
19047	DEL BAC	115.00	19201	BLACKMTN	115.00	1	3.8	-9.2	9.9	49.7	8.3	602.5	Amp	14	14	14	10	140	140	0.0
16103	SOUTH	345.00	16108	GATEWAY	345.00	2	0.0	-63.6	63.6	101.2	6.5	1548.0	Amp	14	14	4	10	10	160	0.0
16103	SOUTH	345.00	16108	GATEWAY	345.00	1	0.0	-63.6	63.6	101.2	6.5	1548.0	Amp	14	14	4	10	10	160	0.0
16313	GW.3WP	100.00	16704	GATEWAY	115.00	1	0.0	0.0	0.0	0.0	0.0	100.0	Mva	14	14	14	10	10	161	0.0
16108	GATEWAY	345.00	16313	GW.3WP	100.00	1	0.0	0.0	0.0	0.0	0.0	100.0	Mva	14	14	14	10	10	161	0.0
14350	ADAMS	115.00	17001	APACHE	115.00	1	-93.8	-8.4	94.1	474.1	0.0	0.0	Amp	14	14	14	10	170	191	1.3
16313	GW.3WP	100.00	16711	GATEWAY	15.00	1	0.0	0.0	0.0	0.0	0.0	100.0	Mva	14	14	14	10	10	161	0.0

WESTERN SYSTEMS COORDINATING COUNCIL
2003 HS3-SA APPROVED BASE CASE

Zone	Zone_name	Loss_mw
10	SANTA CRUZ	9.01

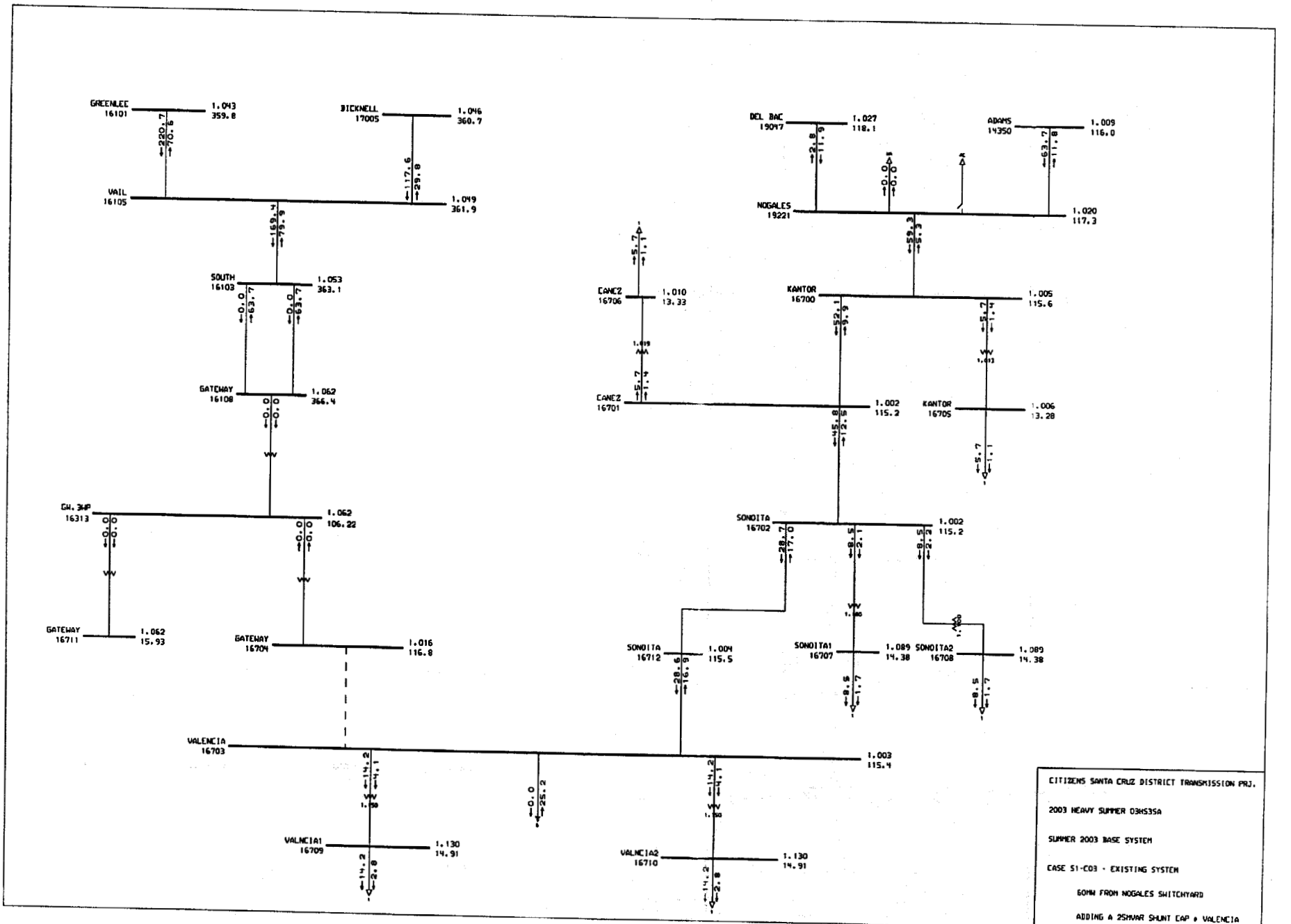
GREENLEE 16101 1.043 359.8
BICKNELL 17005 1.046 360.7
VAIL 16105 1.049 361.9
SOUTH 16103 1.053 363.1
GATEWAY 16108 1.062 366.4
GW.3HP 16313 1.062 106.22
GATEWAY 16711 1.062 15.93
GATEWAY 16704 1.016 116.8
VALENCIA 16703 1.003 115.4
VALNCIA1 16709 1.130 14.91
VALNCIA2 16710 1.130 14.91
DEL BAC 19047 1.027 118.1
ADAMS 14350 1.009 116.0
NOGALES 19221 1.020 117.3
CANEZ 16706 1.010 13.33
KANTOR 16700 1.005 115.6
CANEZ 16701 1.002 115.2
KANTOR 16705 1.006 13.28
SONDITA 16702 1.002 115.2
SONDITA 16712 1.004 115.5
SONDITA1 16707 1.089 14.38
SONDITA2 16708 1.089 14.38
CITIZENS SANTA CRUZ DISTRICT TRANSMISSION PRJ.
2003 HEAVY SUMMER 03HS35A
SUMMER 2003 BASE SYSTEM
CASE S1-C03 - EXISTING SYSTEM
60MW FROM NOGALES SWITCHYARD
ADDING A 25MVAR SHUNT CAP @ VALENCIA

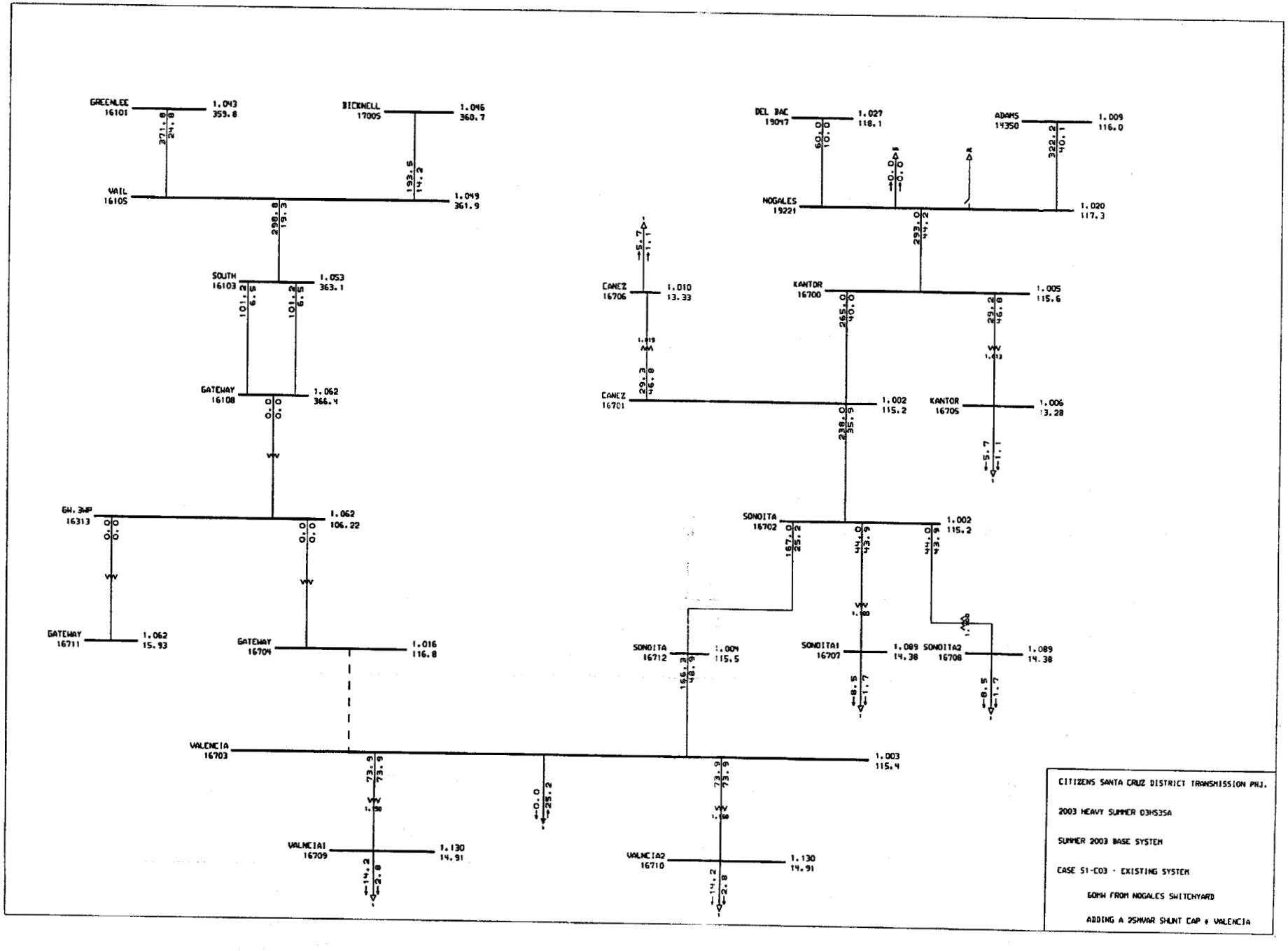
GREENLEE 16101 1.043 359.8
BICKNELL 17005 1.046 360.7
VAIL 16105 1.049 361.9
SOUTH 16103 1.053 363.1
GATEWAY 16108 1.062 366.4
GW.3WP 16313 1.062 106.22
GATEWAY 16711 1.062 15.93
GATEWAY 16704 1.016 116.8
VALENCIA 16703 1.003 115.4
VALNCIA1 16709 1.130 14.91
VALNCIA2 16710 1.130 14.91
SONDITA 16712 1.004 115.5
SONDITA1 16707 1.089 14.38
SONDITA2 16708 1.089 14.38
SONDITA 16702 1.002 115.2
CANEZ 16701 1.002 115.2
CANEZ 16706 1.010 13.33
KANTOR 16700 1.005 115.6
KANTOR 16705 1.006 13.28
NOGALES 19221 1.020 117.3
DEL BAC 19047 1.027 118.1
ADAMS 14350 1.009 116.0
CITIZENS SANTA CRUZ DISTRICT TRANSMISSION PRJ.
2003 HEAVY SUMMER 03HS3SA
SUMMER 2003 BASE SYSTEM
CASE S1-C03 - EXISTING SYSTEM
60MW FROM NOGALES SWITCHYARD
ADDING A 25MVAR SHUNT CAP @ VALENCIA

WESTERN SYSTEMS COORDINATING COUNCIL
2003 HS3-SA APPROVED BASE CASE

--From-	--NAME--	--KV--	---To--	--NAME--	--KV--	CK	---P---	---Q---	--MVA--	-AMPS--	-%rate-	-rate--	unit	-Af	-At	-Ar	-Zf	-Zt	-Zo	-Ploss
16703	VALENCIA	115.00	16709	VALNCIA1	13.20	1	14.2	4.1	14.8	73.9	73.9	20.0	Mva	14	14	14	10	10	10	-0.0
16703	VALENCIA	115.00	16710	VALNCIA2	13.20	1	14.2	4.1	14.8	73.9	73.9	20.0	Mva	14	14	14	10	10	10	0.0
16703	VALENCIA	115.00	16712	SONOITA	115.00	1	-28.4	16.9	33.1	165.4	48.9	340.0	Amp	14	14	14	10	10	10	0.2
16101	GREENLEE	345.00	16104	SPRINGR	345.00	1	-362.8	53.9	366.8	588.5	48.1	1246.7	Amp	14	14	14	10	160	160	6.4
16701	CANEZ	115.00	16706	CANEZ	13.20	1	5.7	1.4	5.9	29.3	46.8	12.5	Mva	14	14	14	10	10	10	0.0
16700	KANTOR	115.00	16705	KANTOR	13.20	1	5.7	1.4	5.9	29.2	46.8	12.5	Mva	14	14	14	10	10	10	0.0
16700	KANTOR	115.00	19221	NOGALES	115.00	1	-57.8	8.5	58.4	291.8	44.2	662.7	Amp	14	14	14	10	10	10	1.5
16702	SONOITA	115.00	16708	SONOITA2	13.20	1	8.5	2.2	8.8	44.0	43.9	20.0	Mva	14	14	14	10	10	10	0.0
16702	SONOITA	115.00	16707	SONOITA1	13.20	1	8.5	2.1	8.8	44.0	43.9	20.0	Mva	14	14	14	10	10	10	0.0
14350	ADAMS	115.00	19221	NOGALES	115.00	1	63.7	-11.8	64.8	322.2	40.1	803.3	Amp	14	14	14	10	10	140	1.5
16700	KANTOR	115.00	16701	CANEZ	115.00	1	52.1	-9.9	53.1	265.0	40.0	662.7	Amp	14	14	14	10	10	10	0.4
16103	SOUTH	345.00	16306	SO.3WP2	100.00	1	242.3	28.6	244.0	387.9	36.4	672.0	Mva	14	14	14	10	160	160	0.1
16701	CANEZ	115.00	16702	SONOITA	115.00	1	45.8	-12.5	47.5	238.0	35.9	662.7	Amp	14	14	14	10	10	10	0.1
16105	VAIL	345.00	16308	VAIL.3WP	100.00	1	166.2	82.7	185.6	296.2	27.9	672.0	Mva	14	14	14	10	160	160	0.0
16702	SONOITA	115.00	16712	SONOITA	115.00	1	28.7	-17.0	33.3	167.0	25.2	662.7	Amp	14	14	14	10	10	10	0.0
16101	GREENLEE	345.00	16105	VAIL	345.00	1	220.7	-70.6	231.7	371.8	24.8	1499.4	Amp	14	14	14	10	10	160	2.6
16103	SOUTH	345.00	16107	WESTWING	345.00	1	-73.1	30.4	79.2	125.9	20.7	1124.6	Amp	14	14	14	10	160	160	0.5
16103	SOUTH	345.00	16105	VAIL	345.00	1	-169.2	68.4	182.5	290.2	19.3	1548.0	Amp	14	14	14	10	10	160	0.1
16105	VAIL	345.00	17005	BICKNELL	345.00	1	-117.6	29.8	121.3	193.5	15.0	1365.1	Amp	14	14	14	10	10	170	0.1
19047	DEL BAC	115.00	19221	NOGALES	115.00	1	-2.8	11.9	12.3	60.0	10.6	602.5	Amp	14	14	14	10	10	140	0.0
16101	GREENLEE	345.00	17010	GREEN-AE	345.00	1	-87.4	20.9	89.9	144.2	10.6	1365.1	Amp	14	14	14	10	170	170	0.0
19047	DEL BAC	115.00	19064	TUCSON	115.00	1	-1.5	-9.0	9.1	44.6	7.4	602.5	Amp	14	14	14	10	191	191	0.0
16103	SOUTH	345.00	16108	GATEWAY	345.00	1	0.0	-63.7	63.7	101.2	6.5	1548.0	Amp	14	14	4	10	10	160	0.0
16103	SOUTH	345.00	16108	GATEWAY	345.00	2	0.0	-63.7	63.7	101.2	6.5	1548.0	Amp	14	14	4	10	10	160	0.0
19047	DEL BAC	115.00	19201	BLACKMTN	115.00	1	4.3	-2.9	5.2	25.4	4.2	602.5	Amp	14	14	14	10	140	140	0.0
16313	GW.3WP	100.00	16704	GATEWAY	115.00	1	-0.0	-0.0	0.0	0.0	0.0	100.0	Mva	14	14	14	10	10	161	-0.0
16108	GATEWAY	345.00	16313	GW.3WP	100.00	1	0.0	0.0	0.0	0.0	0.0	100.0	Mva	14	14	14	10	10	161	-0.0
14350	ADAMS	115.00	17001	APACHE	115.00	1	-95.1	2.4	95.1	473.2	0.0	0.0	Amp	14	14	14	10	170	191	1.3
16313	GW.3WP	100.00	16711	GATEWAY	15.00	1	0.0	0.0	0.0	0.0	0.0	100.0	Mva	14	14	14	10	10	161	0.0

WESTERN SYSTEMS COORDINATING COUNCIL
2003 HS3-SA APPROVED BASE CASE

Zone	Zone_name	Loss_mw
10	SANTA CRUZ	8.49

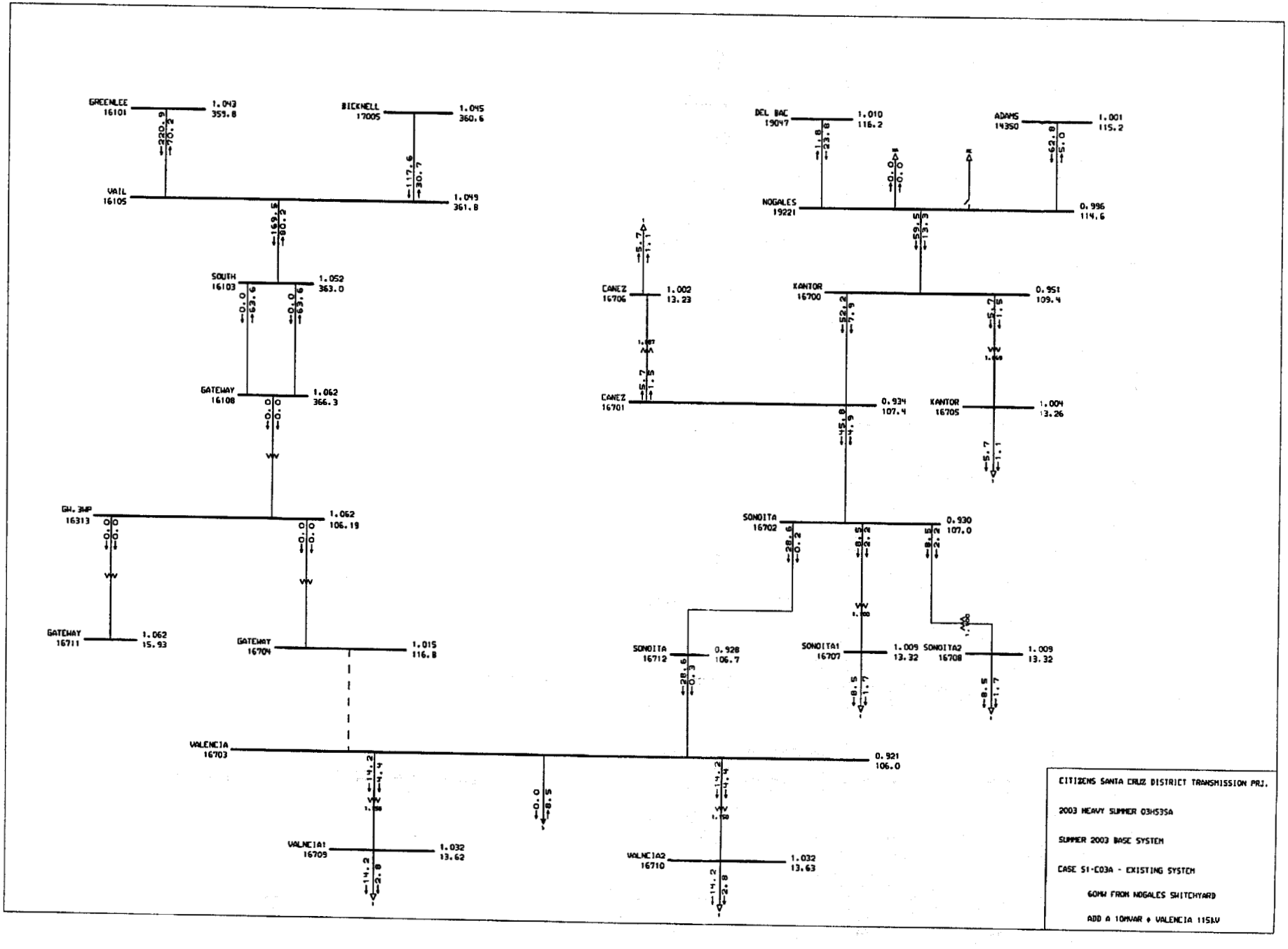
GREENLEE 16101 1.043 359.8
BICKNELL 17005 1.045 360.6
VAIL 16105 1.049 361.8
SOUTH 16103 1.052 363.0
GATEWAY 16108 1.062 366.3
GW.3MP 16313 1.062 106.19
GATEWAY 16711 1.062 15.93
GATEWAY 16704 1.015 116.8
DEL BAC 19047 1.010 116.2
ADAMS 14350 1.001 115.2
NOGALES 19221 0.996 114.6
CANEZ 16706 1.002 13.23
KANTOR 16700 0.951 109.4
CANEZ 16701 0.934 107.4
KANTOR 16705 1.004 13.26
SONOITA 16702 0.930 107.0
SONOITA 16712 0.928 106.7
SONOITA1 16707 1.009 13.32
SONOITA2 16708 1.009 13.32
VALENCIA 16703 0.921 106.0
VALNCIA1 16709 1.032 13.62
VALNCIA2 16710 1.032 13.63
CITIZENS SANTA CRUZ DISTRICT TRANSMISSION PRJ.
2003 HEAVY SUMMER 03HS3SA
SUMMER 2003 BASE SYSTEM
CASE S1-C03A - EXISTING SYSTEM
60MW FROM NOGALES SWITCHYARD
ADD A 10MVAR @ VALENCIA 115kV

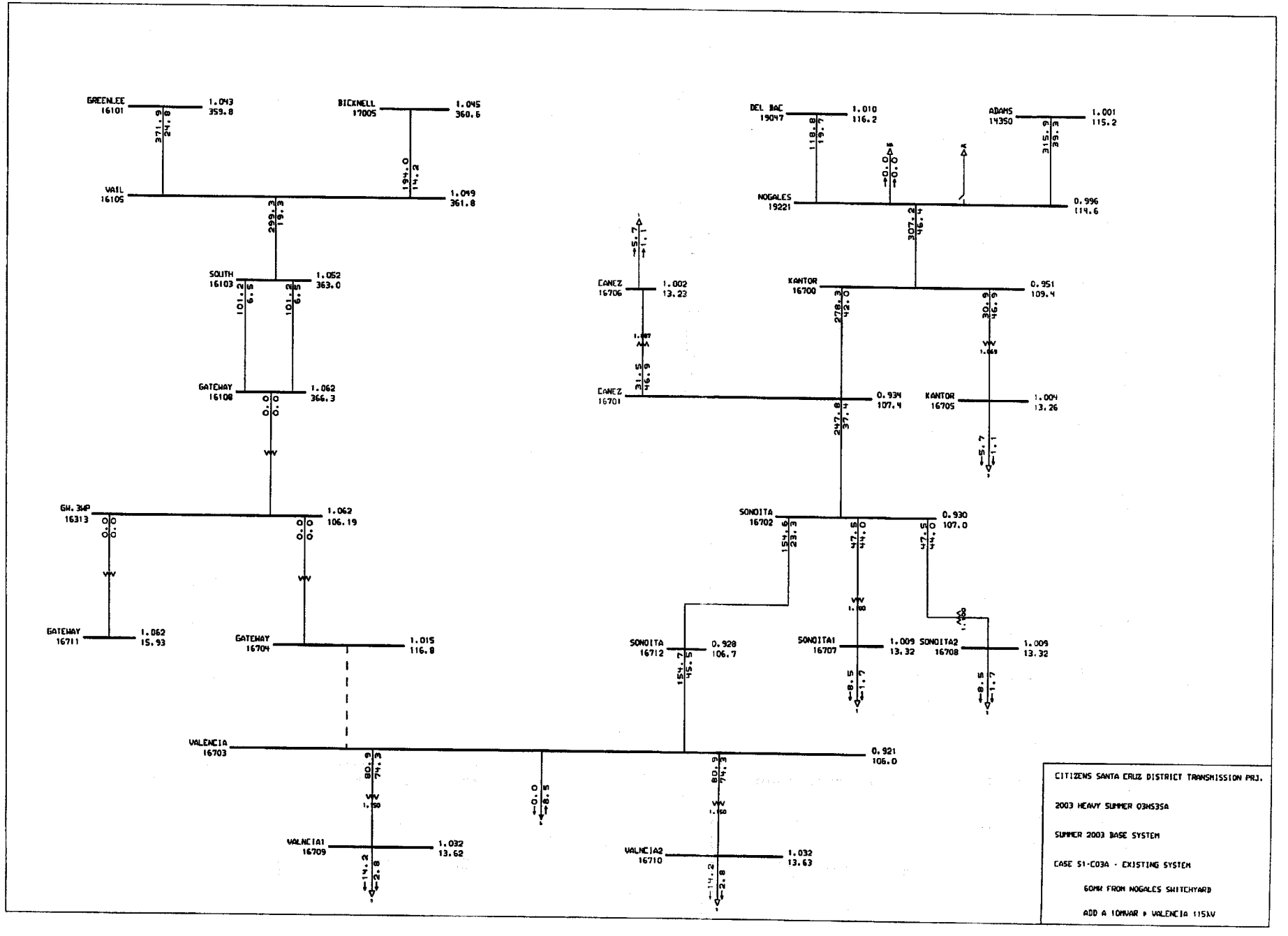
GREENLEE 16101 1.043 359.8
BICKNELL 17005 1.045 360.6
VAIL 16105 1.049 361.8
SOUTH 16103 1.052 363.0
GATEWAY 16108 1.062 366.3
GW.34P 16313 1.062 106.19
GATEWAY 16711 1.062 15.93
GATEWAY 16704 1.015 116.8
VALENCIA 16703 0.921 106.0
VALNCIA1 16709 1.032 13.62
VALNCIA2 16710 1.032 13.63
SONOITA 16712 0.928 106.7
SONOITA 16702 0.930 107.0
SONOITA1 16707 1.009 13.32
SONOITA2 16708 1.009 13.32
CANEZ 16706 1.002 13.23
CANEZ 16701 0.934 107.4
KANTOR 16700 0.951 109.4
KANTOR 16705 1.004 13.26
DEL BAC 19047 1.010 116.2
ADAMS 14350 1.001 115.2
NOGALES 19221 0.996 114.6
CITIZENS SANTA CRUZ DISTRICT TRANSMISSION PRJ.
2003 HEAVY SUMMER 03HS3SA
SUMMER 2003 BASE SYSTEM
CASE 51-C03A - EXISTING SYSTEM
60MW FROM NOGALES SWITCHYARD
ADD A 10MVAR @ VALENCIA 115kV

WESTERN SYSTEMS COORDINATING COUNCIL
2003 HS3-SA APPROVED BASE CASE

--From-	--NAME--	--KV--	---To--	--NAME--	--KV--	CK	---P---	---Q---	--MVA--	-AMPS--	-%rate-	-rate--	unit	-Af	-At	-Ar	-Zf	-Zt	-Zo	-Ploss
16703	VALENCIA	115.00	16709	VALNCIA1	13.20	1	14.2	4.4	14.9	80.9	74.3	20.0	Mva	14	14	14	10	10	10	-0.0
16703	VALENCIA	115.00	16710	VALNCIA2	13.20	1	14.2	4.4	14.9	80.9	74.3	20.0	Mva	14	14	14	10	10	10	0.0
16101	GREENLEE	345.00	16104	SPRINGR	345.00	1	-362.7	53.7	366.6	588.3	48.1	1246.7	Amp	14	14	14	10	160	160	6.4
16701	CANEZ	115.00	16706	CANEZ	13.20	1	5.7	1.5	5.9	31.5	46.9	12.5	Mva	14	14	14	10	10	10	0.0
16700	KANTOR	115.00	16705	KANTOR	13.20	1	5.7	1.5	5.9	30.9	46.9	12.5	Mva	14	14	14	10	10	10	0.0
16700	KANTOR	115.00	19221	NOGALES	115.00	1	-57.8	-9.4	58.6	309.1	46.6	662.7	Amp	14	14	14	10	10	10	1.6
16703	VALENCIA	115.00	16712	SONOITA	115.00	1	-28.4	-0.3	28.4	154.7	45.5	340.0	Amp	14	14	14	10	10	10	0.2
16702	SONOITA	115.00	16708	SONOITA2	13.20	1	8.5	2.2	8.8	47.5	44.0	20.0	Mva	14	14	14	10	10	10	0.0
16702	SONOITA	115.00	16707	SONOITA1	13.20	1	8.5	2.2	8.8	47.5	44.0	20.0	Mva	14	14	14	10	10	10	-0.0
16700	KANTOR	115.00	16701	CANEZ	115.00	1	52.2	7.9	52.8	278.4	42.1	662.7	Amp	14	14	14	10	10	10	0.6
14350	ADAMS	115.00	19221	NOGALES	115.00	1	62.8	-5.0	63.0	315.9	39.3	803.3	Amp	14	14	14	10	10	140	1.5
16701	CANEZ	115.00	16702	SONOITA	115.00	1	45.8	4.9	46.1	247.8	37.4	662.7	Amp	14	14	14	10	10	10	0.1
16103	SOUTH	345.00	16306	SO.3WP2	100.00	1	242.3	28.5	244.0	388.1	36.4	672.0	Mva	14	14	14	10	160	160	0.1
16105	VAIL	345.00	16308	VAIL.3WP	100.00	1	166.4	82.4	185.6	296.3	27.8	672.0	Mva	14	14	14	10	160	160	0.0
16101	GREENLEE	345.00	16105	VAIL	345.00	1	220.9	-70.2	231.8	371.9	24.8	1499.4	Amp	14	14	14	10	10	160	2.6
16702	SONOITA	115.00	16712	SONOITA	115.00	1	28.6	0.2	28.6	154.7	23.3	662.7	Amp	14	14	14	10	10	10	0.0
16103	SOUTH	345.00	16107	WESTWING	345.00	1	-73.1	30.1	79.0	125.7	20.7	1124.6	Amp	14	14	14	10	160	160	0.5
19047	DEL BAC	115.00	19221	NOGALES	115.00	1	-1.8	23.8	23.9	118.8	20.4	602.5	Amp	14	14	14	10	10	140	0.0
16103	SOUTH	345.00	16105	VAIL	345.00	1	-169.3	68.7	182.7	290.6	19.3	1548.0	Amp	14	14	14	10	10	160	0.2
16105	VAIL	345.00	17005	BICKNELL	345.00	1	-117.6	30.7	121.6	194.0	15.0	1365.1	Amp	14	14	14	10	10	170	0.1
19047	DEL BAC	115.00	19064	TUCSON	115.00	1	-2.2	-17.0	17.1	85.1	14.1	602.5	Amp	14	14	14	10	191	191	0.0
16101	GREENLEE	345.00	17010	GREEN-AE	345.00	1	-87.8	20.9	90.2	144.8	10.7	1365.1	Amp	14	14	14	10	170	170	0.0
19047	DEL BAC	115.00	19201	BLACKMTN	115.00	1	4.0	-6.9	8.0	39.5	6.6	602.5	Amp	14	14	14	10	140	140	0.0
16103	SOUTH	345.00	16108	GATEWAY	345.00	1	0.0	-63.6	63.6	101.2	6.5	1548.0	Amp	14	14	4	10	10	160	0.0
16103	SOUTH	345.00	16108	GATEWAY	345.00	2	0.0	-63.6	63.6	101.2	6.5	1548.0	Amp	14	14	4	10	10	160	0.0
16313	GW.3WP	100.00	16704	GATEWAY	115.00	1	0.0	0.0	0.0	0.0	0.0	100.0	Mva	14	14	14	10	10	161	-0.0
16108	GATEWAY	345.00	16313	GW.3WP	100.00	1	0.0	0.0	0.0	0.0	0.0	100.0	Mva	14	14	14	10	10	161	-0.0
14350	ADAMS	115.00	17001	APACHE	115.00	1	-94.2	-4.4	94.3	472.8	0.0	0.0	Amp	14	14	14	10	170	191	1.3
16313	GW.3WP	100.00	16711	GATEWAY	15.00	1	0.0	0.0	0.0	0.0	0.0	100.0	Mva	14	14	14	10	10	161	0.0

WESTERN SYSTEMS COORDINATING COUNCIL
2003 HS3-SA APPROVED BASE CASE

Zone	Zone_name	Loss_mw
10	SANTA CRUZ	8.69

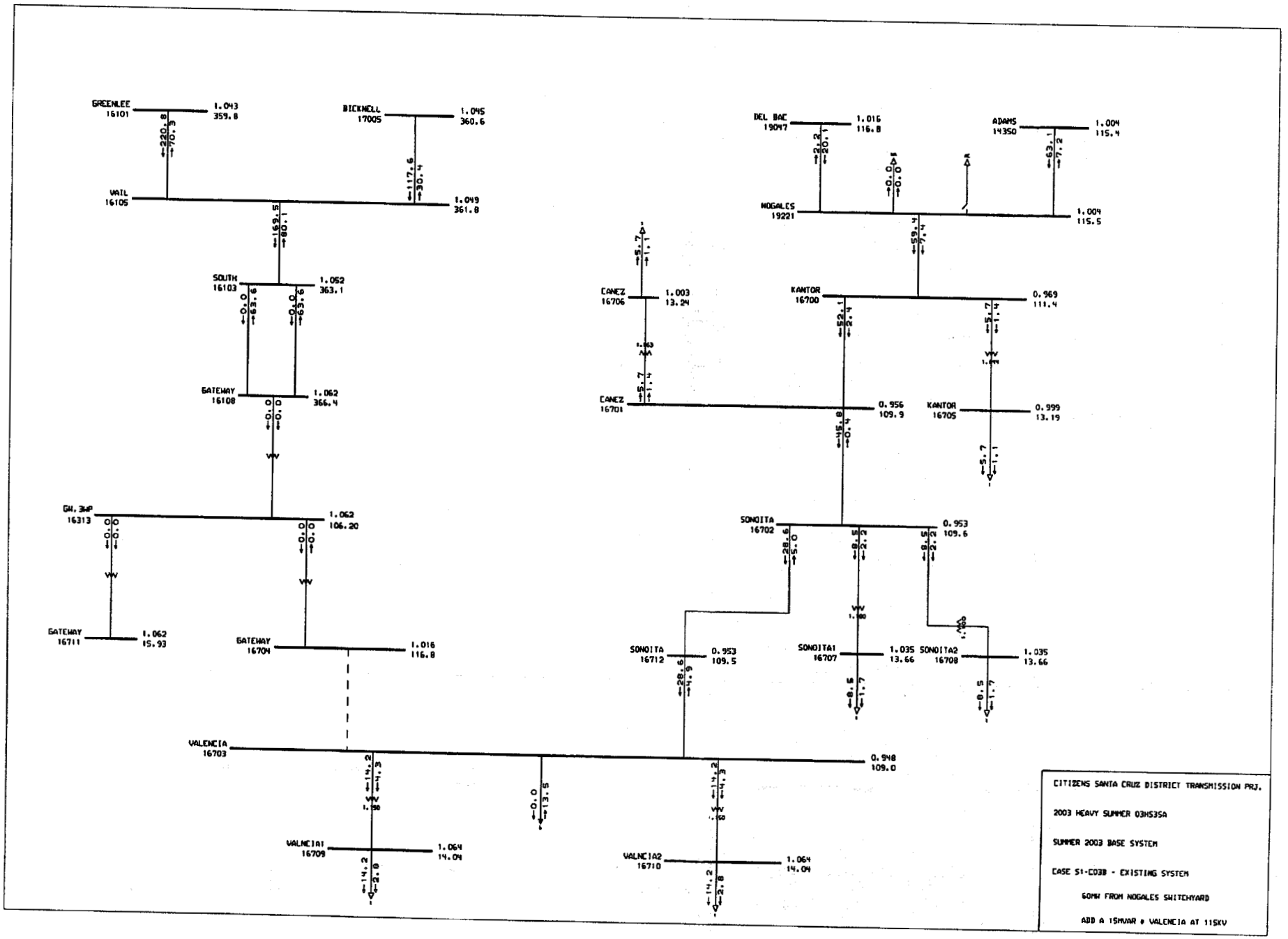
GREENLEE 16101 1.043 359.8
BICKNELL 17005 1.045 360.6
DEL BAC 19047 1.016 116.8
ADAMS 14350 1.004 115.4
VAIL 16105 1.049 361.8
NOGALES 19221 1.004 115.5
SOUTH 16103 1.052 363.1
CANEZ 16706 1.003 13.24
KANTOR 16700 0.969 111.4
GATEWAY 16108 1.062 366.4
CANEZ 16701 0.956 109.9
KANTOR 16705 0.999 13.19
GW. 3WP 16313 1.062 106.20
SONOITA 16702 0.953 109.6
GATEWAY 16711 1.062 15.93
GATEWAY 16704 1.016 116.8
SONOITA 16712 0.953 109.5
SONOITA1 16707 1.035 13.66
SONOITA2 16708 1.035 13.66
VALENCIA 16703 0.948 109.0
VALNCIA1 16709 1.064 14.04
VALNCIA2 16710 1.064 14.04
CITIZENS SANTA CRUZ DISTRICT TRANSMISSION PRJ.
2003 HEAVY SUMMER 03HS3SA
SUMMER 2003 BASE SYSTEM
CASE S1-C03B - EXISTING SYSTEM
60MW FROM NOGALES SWITCHYARD
ADD A 15MVAR @ VALENCIA AT 115KV

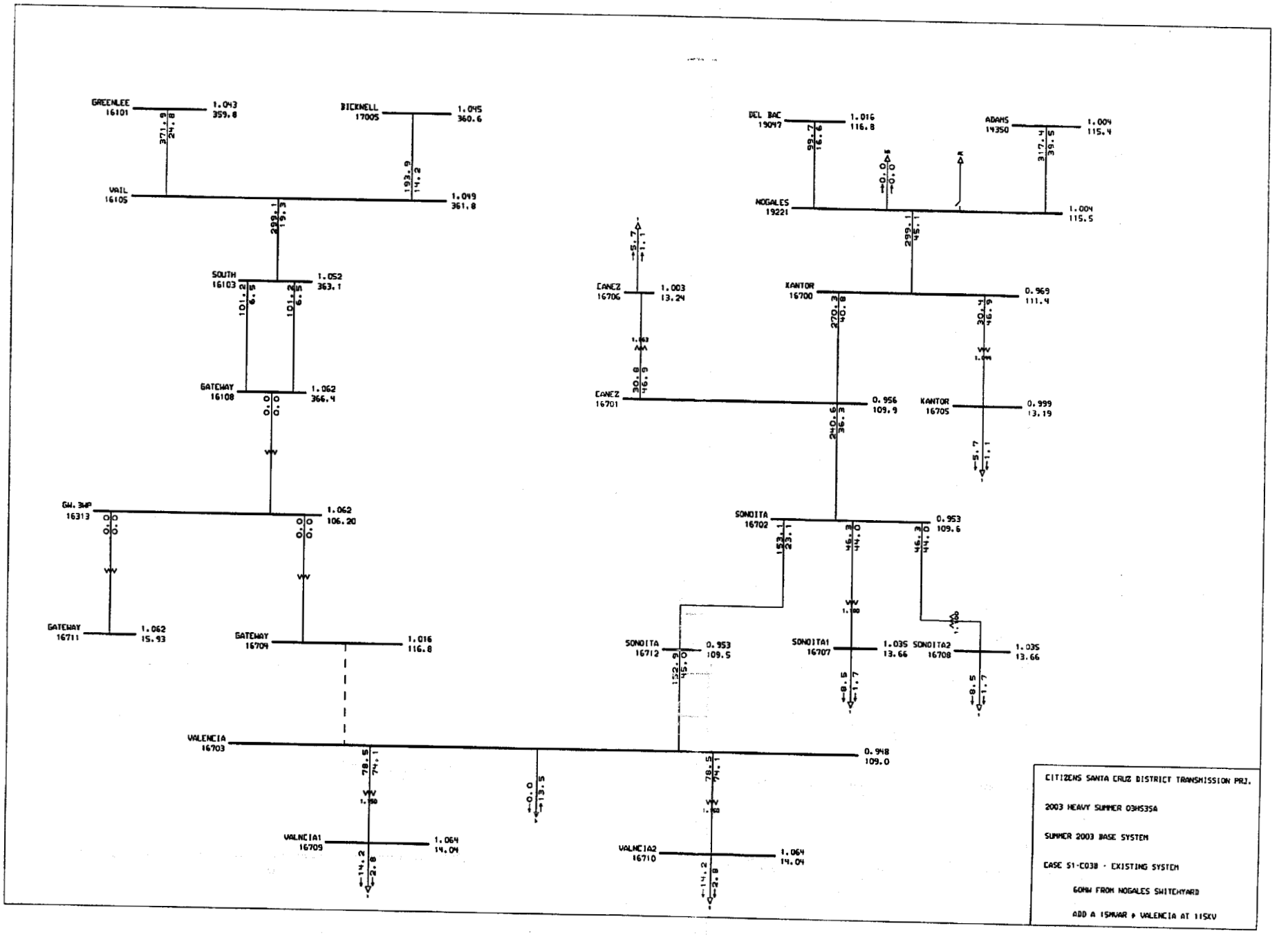
GREENLEE 16101 1.043 359.8
BICKNELL 17005 1.045 360.6
VAIL 16105 1.049 361.8
SOUTH 16103 1.052 363.1
GATEWAY 16108 1.062 366.4
GW. 34P 16313 1.062 106.20
GATEWAY 16711 1.062 15.93
GATEWAY 16704 1.016 116.8
VALENCIA 16703 0.948 109.0
VALNCIA1 16709 1.064 14.04
VALNCIA2 16710 1.064 14.04
DEL BAC 19097 1.016 116.8
ADAMS 14350 1.004 115.4
NOGALES 19221 1.004 115.5
CANEZ 16706 1.003 13.24
CANEZ 16701 0.956 109.9
XANTOR 16700 0.969 111.4
XANTOR 16705 0.999 13.19
SONDITA 16702 0.953 109.6
SONDITA 16712 0.953 109.5
SONDITA1 16707 1.035 13.66
SONDITA2 16708 1.035 13.66
CITIZENS SANTA CRUZ DISTRICT TRANSMISSION PRJ.
2003 HEAVY SUMMER 03HS35A
SUMMER 2003 BASE SYSTEM
CASE S1-C03B - EXISTING SYSTEM
60MW FROM NOGALES SWITCHYARD
ADD A 15MVAR @ VALENCIA AT 115KV

WESTERN SYSTEMS COORDINATING COUNCIL
2003 HS3-SA APPROVED BASE CASE

--From-	--NAME--	--KV--	---To--	--NAME--	--KV--	CK	---P---	---Q---	--MVA--	-AMPS--	-%rate-	-rate--	unit	-Af	-At	-Ar	-Zf	-Zt	-Zo	-Ploss
16703	VALENCIA	115.00	16709	VALNCIA1	13.20	1	14.2	4.3	14.8	78.5	74.1	20.0	Mva	14	14	14	10	10	10	-0.0
16703	VALENCIA	115.00	16710	VALNCIA2	13.20	1	14.2	4.3	14.8	78.5	74.1	20.0	Mva	14	14	14	10	10	10	0.0
16101	GREENLEE	345.00	16104	SPRINGR	345.00	1	-362.7	53.8	366.7	588.3	48.1	1246.7	Amp	14	14	14	10	160	160	6.4
16701	CANEZ	115.00	16706	CANEZ	13.20	1	5.7	1.4	5.9	30.8	46.9	12.5	Mva	14	14	14	10	10	10	-0.0
16700	KANTOR	115.00	16705	KANTOR	13.20	1	5.7	1.4	5.9	30.4	46.9	12.5	Mva	14	14	14	10	10	10	-0.0
16700	KANTOR	115.00	19221	NOGALES	115.00	1	-57.8	-3.9	57.9	300.1	45.3	662.7	Amp	14	14	14	10	10	10	1.5
16703	VALENCIA	115.00	16712	SONOITA	115.00	1	-28.4	4.9	28.8	152.6	45.0	340.0	Amp	14	14	14	10	10	10	0.2
16702	SONOITA	115.00	16708	SONOITA2	13.20	1	8.5	2.2	8.8	46.3	44.0	20.0	Mva	14	14	14	10	10	10	-0.0
16702	SONOITA	115.00	16707	SONOITA1	13.20	1	8.5	2.2	8.8	46.3	44.0	20.0	Mva	14	14	14	10	10	10	-0.0
16700	KANTOR	115.00	16701	CANEZ	115.00	1	52.1	2.4	52.2	270.3	40.8	662.7	Amp	14	14	14	10	10	10	0.6
14350	ADAMS	115.00	19221	NOGALES	115.00	1	63.1	-7.2	63.5	317.4	39.5	803.3	Amp	14	14	14	10	10	140	1.5
16103	SOUTH	345.00	16306	SO.3WP2	100.00	1	242.3	28.5	244.0	388.0	36.4	672.0	Mva	14	14	14	10	160	160	0.1
16701	CANEZ	115.00	16702	SONOITA	115.00	1	45.8	-0.4	45.8	240.6	36.3	662.7	Amp	14	14	14	10	10	10	0.1
16105	VAIL	345.00	16308	VAIL.3WP	100.00	1	166.3	82.5	185.6	296.2	27.9	672.0	Mva	14	14	14	10	160	160	0.0
16101	GREENLEE	345.00	16105	VAIL	345.00	1	220.8	-70.3	231.8	371.9	24.8	1499.4	Amp	14	14	14	10	10	160	2.6
16702	SONOITA	115.00	16712	SONOITA	115.00	1	28.6	-5.0	29.1	153.1	23.1	662.7	Amp	14	14	14	10	10	10	0.0
16103	SOUTH	345.00	16107	WESTWING	345.00	1	-73.1	30.2	79.1	125.7	20.7	1124.6	Amp	14	14	14	10	160	160	0.5
16103	SOUTH	345.00	16105	VAIL	345.00	1	-169.3	68.6	182.7	290.5	19.3	1548.0	Amp	14	14	14	10	10	160	0.2
19047	DEL BAC	115.00	19221	NOGALES	115.00	1	-2.2	20.1	20.2	99.7	17.2	602.5	Amp	14	14	14	10	10	140	0.0
16105	VAIL	345.00	17005	BICKNELL	345.00	1	-117.6	30.4	121.5	193.9	15.0	1365.1	Amp	14	14	14	10	10	170	0.1
19047	DEL BAC	115.00	19064	TUCSON	115.00	1	-2.0	-14.4	14.6	72.0	12.0	602.5	Amp	14	14	14	10	191	191	0.0
16101	GREENLEE	345.00	17010	GREEN-AE	345.00	1	-87.7	20.9	90.1	144.6	10.6	1365.1	Amp	14	14	14	10	170	170	0.0
16103	SOUTH	345.00	16108	GATEWAY	345.00	1	0.0	-63.6	63.6	101.2	6.5	1548.0	Amp	14	14	4	10	10	160	0.0
16103	SOUTH	345.00	16108	GATEWAY	345.00	2	0.0	-63.6	63.6	101.2	6.5	1548.0	Amp	14	14	4	10	10	160	0.0
19047	DEL BAC	115.00	19201	BLACKMTN	115.00	1	4.1	-5.6	7.0	34.4	5.7	602.5	Amp	14	14	14	10	140	140	0.0
16313	GW.3WP	100.00	16704	GATEWAY	115.00	1	0.0	-0.0	0.0	0.0	0.0	100.0	Mva	14	14	14	10	10	161	0.0
16108	GATEWAY	345.00	16313	GW.3WP	100.00	1	0.0	0.0	0.0	0.0	0.0	100.0	Mva	14	14	14	10	10	161	-0.0
14350	ADAMS	115.00	17001	APACHE	115.00	1	-94.5	-2.2	94.5	472.5	0.0	0.0	Amp	14	14	14	10	170	191	1.3
16313	GW.3WP	100.00	16711	GATEWAY	15.00	1	0.0	0.0	0.0	0.0	0.0	100.0	Mva	14	14	14	10	10	161	0.0

WESTERN SYSTEMS COORDINATING COUNCIL
2003 HS3-SA APPROVED BASE CASE

Zone	Zone_name	Loss_mw
10	SANTA CRUZ	8.54

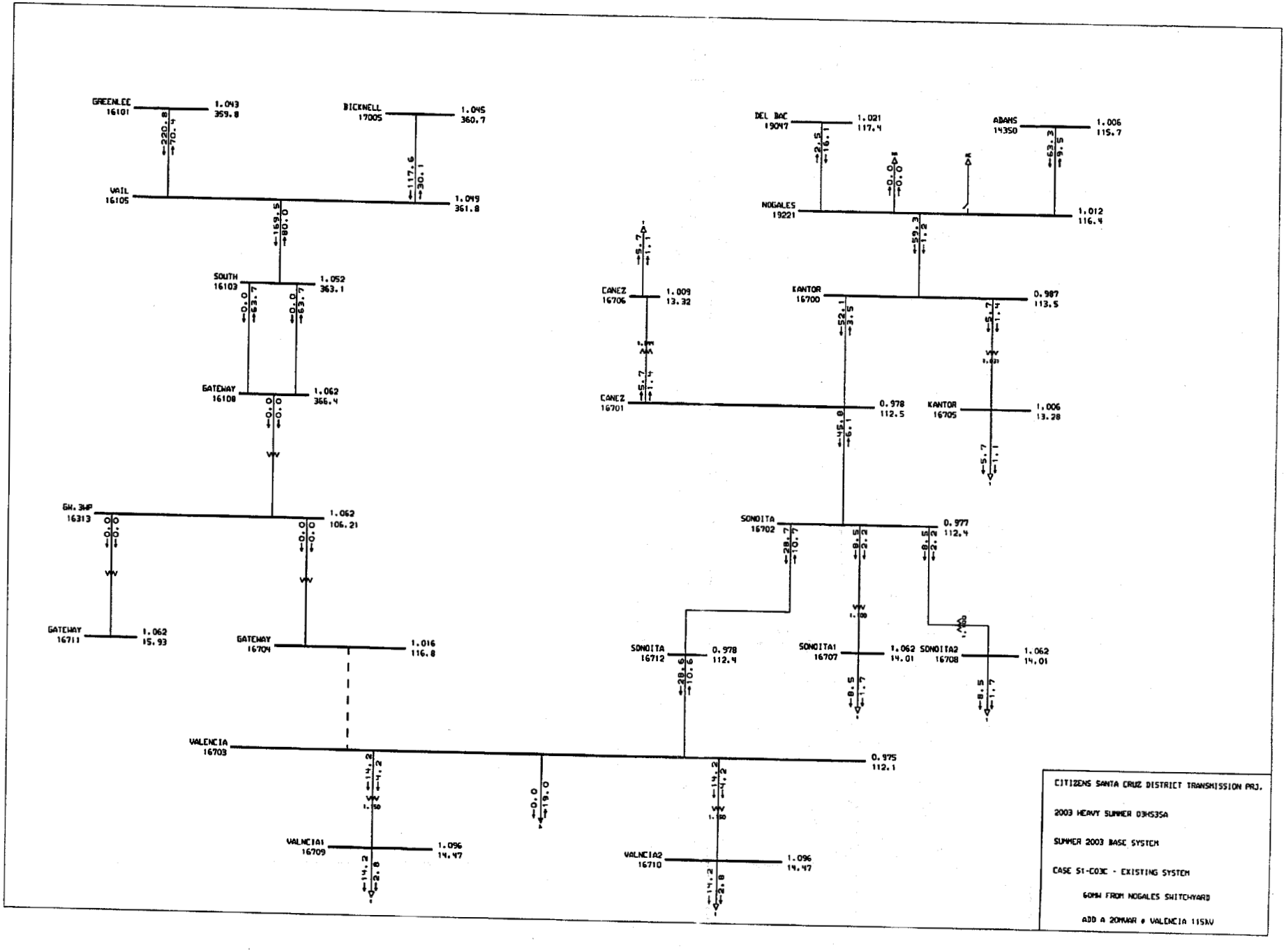
GREENLEE 16101 1.043 359.8
BICKNELL 17005 1.045 360.7
VAIL 16105 1.049 361.8
SOUTH 16103 1.052 363.1
GATEWAY 16108 1.062 366.4
GW.3WP 16313 1.062 106.21
GATEWAY 16711 1.062 15.93
GATEWAY 16704 1.016 116.8
VALENCIA 16703 0.975 112.1
VALNCIA1 16709 1.096 14.47
VALNCIA2 16710 1.096 14.47
DEL BAC 19047 1.021 117.4
ABANS 14350 1.006 115.7
NOGALES 19221 1.012 116.4
CANEZ 16706 1.009 13.32
CANEZ 16701 0.978 112.5
KANTOR 16700 0.987 113.5
KANTOR 16705 1.006 13.28
SONOITA 16702 0.977 112.4
SONOITA 16712 0.978 112.4
SONOITA1 16707 1.062 14.01
SONOITA2 16708 1.062 14.01
CITIZENS SANTA CRUZ DISTRICT TRANSMISSION PRJ.
2003 HEAVY SUMMER 03HS3SA
SUMMER 2003 BASE SYSTEM
CASE S1-C03C - EXISTING SYSTEM
60MW FROM NOGALES SWITCHYARD
ADD A 20MVAR @ VALENCIA 115KV

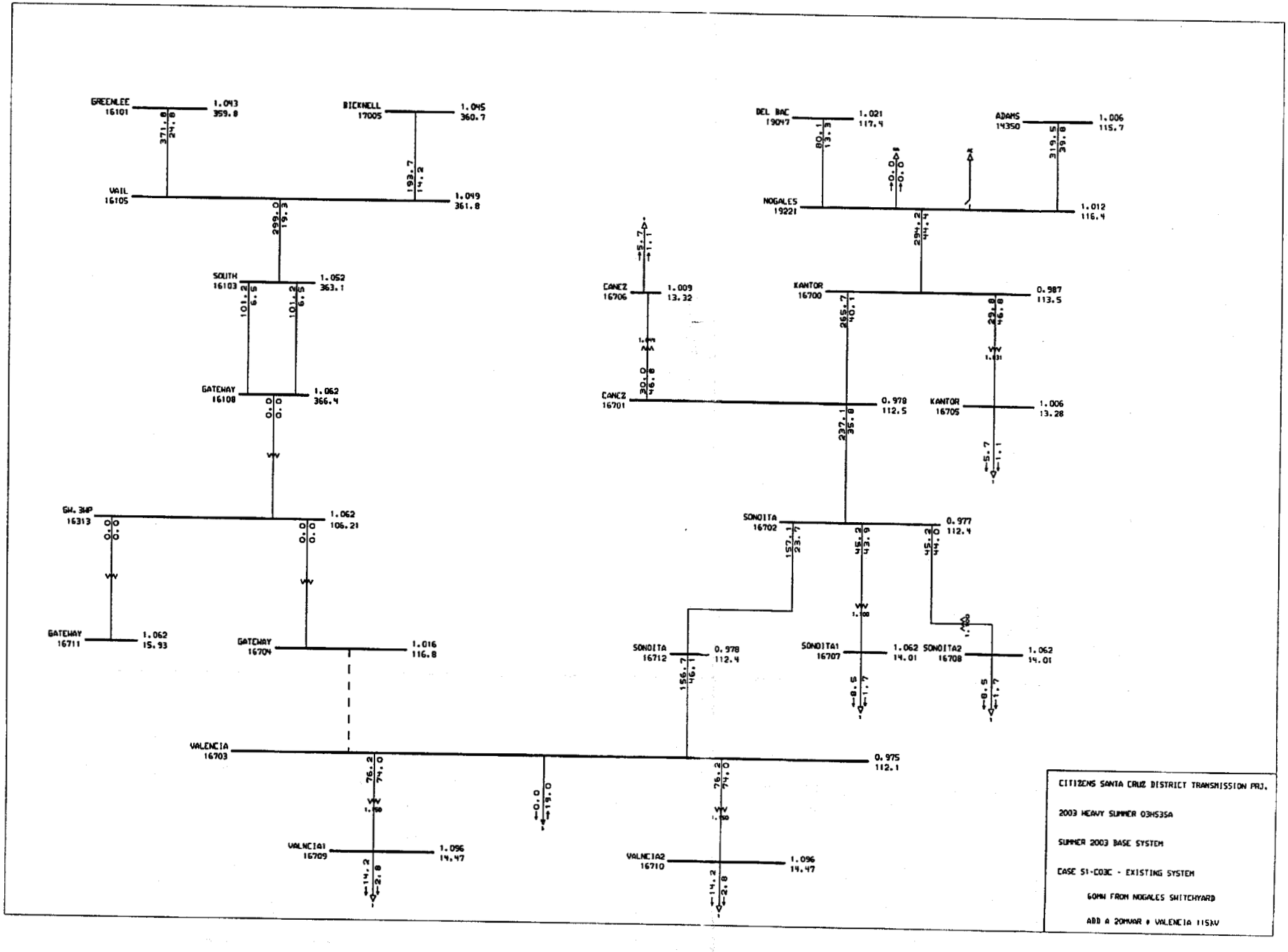
GREENLEE 16101 1.043 359.8
BICKNELL 17005 1.045 360.7
VAIL 16105 1.049 361.8
SOUTH 16103 1.052 363.1
GATEWAY 16108 1.062 366.4
GW. 34P 16313 1.062 106.21
GATEWAY 16711 1.062 15.93
GATEWAY 16704 1.016 116.8
VALENCIA 16703 0.975 112.1
VALNCIA1 16709 1.096 14.47
VALNCIA2 16710 1.096 14.47
DEL BAC 19047 1.021 117.4
ADAMS 14350 1.006 115.7
NOGALES 19221 1.012 116.4
CANEZ 16706 1.009 13.32
KANTOR 16700 0.987 113.5
CANCZ 16701 0.979 112.5
KANTOR 16705 1.006 13.28
SONOITA 16702 0.977 112.4
SONOITA 16712 0.978 112.4
SONOITA1 16707 1.062 14.01
SONOITA2 16708 1.062 14.01
CITIZENS SANTA CRUZ DISTRICT TRANSMISSION PRJ.
2003 HEAVY SUMMER 03HS3SA
SUMMER 2003 BASE SYSTEM
CASE S1-C03C - EXISTING SYSTEM
60MW FROM NOGALES SWITCHYARD
ADD A 20MVAR @ VALENCIA 115kV

WESTERN SYSTEMS COORDINATING COUNCIL
2003 HS3-SA APPROVED BASE CASE

--From-	--NAME--	--KV--	---To--	--NAME--	--KV--	CK	---P---	---Q---	--MVA--	-AMPS--	-%rate-	-rate--	unit	-Af	-At	-Ar	-Zf	-Zt	-Zo	-Ploss
16703	VALENCIA	115.00	16709	VALNCIA1	13.20	1	14.2	4.2	14.8	76.2	74.0	20.0	Mva	14	14	14	10	10	10	-0.0
16703	VALENCIA	115.00	16710	VALNCIA2	13.20	1	14.2	4.2	14.8	76.2	74.0	20.0	Mva	14	14	14	10	10	10	0.0
16101	GREENLEE	345.00	16104	SPRINGR	345.00	1	-362.7	53.8	366.7	588.4	48.1	1246.7	Amp	14	14	14	10	160	160	6.4
16701	CANEZ	115.00	16706	CANEZ	13.20	1	5.7	1.4	5.9	30.0	46.8	12.5	Mva	14	14	14	10	10	10	0.0
16700	KANTOR	115.00	16705	KANTOR	13.20	1	5.7	1.4	5.9	29.8	46.8	12.5	Mva	14	14	14	10	10	10	-0.0
16703	VALENCIA	115.00	16712	SONOITA	115.00	1	-28.4	10.6	30.3	156.1	46.1	340.0	Amp	14	14	14	10	10	10	0.2
16700	KANTOR	115.00	19221	NOGALES	115.00	1	-57.8	2.1	57.8	294.2	44.4	662.7	Amp	14	14	14	10	10	10	1.5
16702	SONOITA	115.00	16708	SONOITA2	13.20	1	8.5	2.2	8.8	45.2	44.0	20.0	Mva	14	14	14	10	10	10	-0.0
16702	SONOITA	115.00	16707	SONOITA1	13.20	1	8.5	2.2	8.8	45.2	43.9	20.0	Mva	14	14	14	10	10	10	-0.0
16700	KANTOR	115.00	16701	CANEZ	115.00	1	52.1	-3.5	52.2	265.7	40.1	662.7	Amp	14	14	14	10	10	10	0.6
14350	ADAMS	115.00	19221	NOGALES	115.00	1	63.3	-9.5	64.0	319.5	39.8	803.3	Amp	14	14	14	10	10	140	1.5
16103	SOUTH	345.00	16306	SO.3WP2	100.00	1	242.3	28.6	244.0	387.9	36.4	672.0	Mva	14	14	14	10	160	160	0.1
16701	CANEZ	115.00	16702	SONOITA	115.00	1	45.8	-6.1	46.2	237.1	35.8	662.7	Amp	14	14	14	10	10	10	0.1
16105	VAIL	345.00	16308	VAIL.3WP	100.00	1	166.3	82.6	185.6	296.2	27.9	672.0	Mva	14	14	14	10	160	160	0.0
16101	GREENLEE	345.00	16105	VAIL	345.00	1	220.8	-70.4	231.7	371.8	24.8	1499.4	Amp	14	14	14	10	10	160	2.6
16702	SONOITA	115.00	16712	SONOITA	115.00	1	28.7	-10.7	30.6	157.1	23.7	662.7	Amp	14	14	14	10	10	10	0.0
16103	SOUTH	345.00	16107	WESTWING	345.00	1	-73.1	30.3	79.1	125.8	20.7	1124.6	Amp	14	14	14	10	160	160	0.5
16103	SOUTH	345.00	16105	VAIL	345.00	1	-169.3	68.5	182.6	290.3	19.3	1548.0	Amp	14	14	14	10	10	160	0.2
16105	VAIL	345.00	17005	BICKNELL	345.00	1	-117.6	30.1	121.4	193.7	15.0	1365.1	Amp	14	14	14	10	10	170	0.1
19047	DEL BAC	115.00	19221	NOGALES	115.00	1	-2.5	16.1	16.3	80.1	14.0	602.5	Amp	14	14	14	10	10	140	0.0
16101	GREENLEE	345.00	17010	GREEN-AE	345.00	1	-87.6	20.9	90.0	144.4	10.6	1365.1	Amp	14	14	14	10	170	170	0.0
19047	DEL BAC	115.00	19064	TUCSON	115.00	1	-1.7	-11.8	11.9	58.6	9.7	602.5	Amp	14	14	14	10	191	191	0.0
16103	SOUTH	345.00	16108	GATEWAY	345.00	2	0.0	-63.7	63.7	101.2	6.5	1548.0	Amp	14	14	4	10	10	160	0.0
16103	SOUTH	345.00	16108	GATEWAY	345.00	1	0.0	-63.7	63.7	101.2	6.5	1548.0	Amp	14	14	4	10	10	160	0.0
19047	DEL BAC	115.00	19201	BLACKMTN	115.00	1	4.2	-4.3	6.0	29.6	4.9	602.5	Amp	14	14	14	10	140	140	0.0
16313	GW.3WP	100.00	16704	GATEWAY	115.00	1	0.0	0.0	0.0	0.0	0.0	100.0	Mva	14	14	14	10	10	161	-0.0
16108	GATEWAY	345.00	16313	GW.3WP	100.00	1	0.0	0.0	0.0	0.0	0.0	100.0	Mva	14	14	14	10	10	161	-0.0
14350	ADAMS	115.00	17001	APACHE	115.00	1	-94.7	0.1	94.7	472.6	0.0	0.0	Amp	14	14	14	10	170	191	1.3
16313	GW.3WP	100.00	16711	GATEWAY	15.00	1	0.0	0.0	0.0	0.0	0.0	100.0	Mva	14	14	14	10	10	161	0.0

WESTERN SYSTEMS COORDINATING COUNCIL
2003 HS3-SA APPROVED BASE CASE

Zone	Zone_name	Loss_mw
10	SANTA CRUZ	8.47

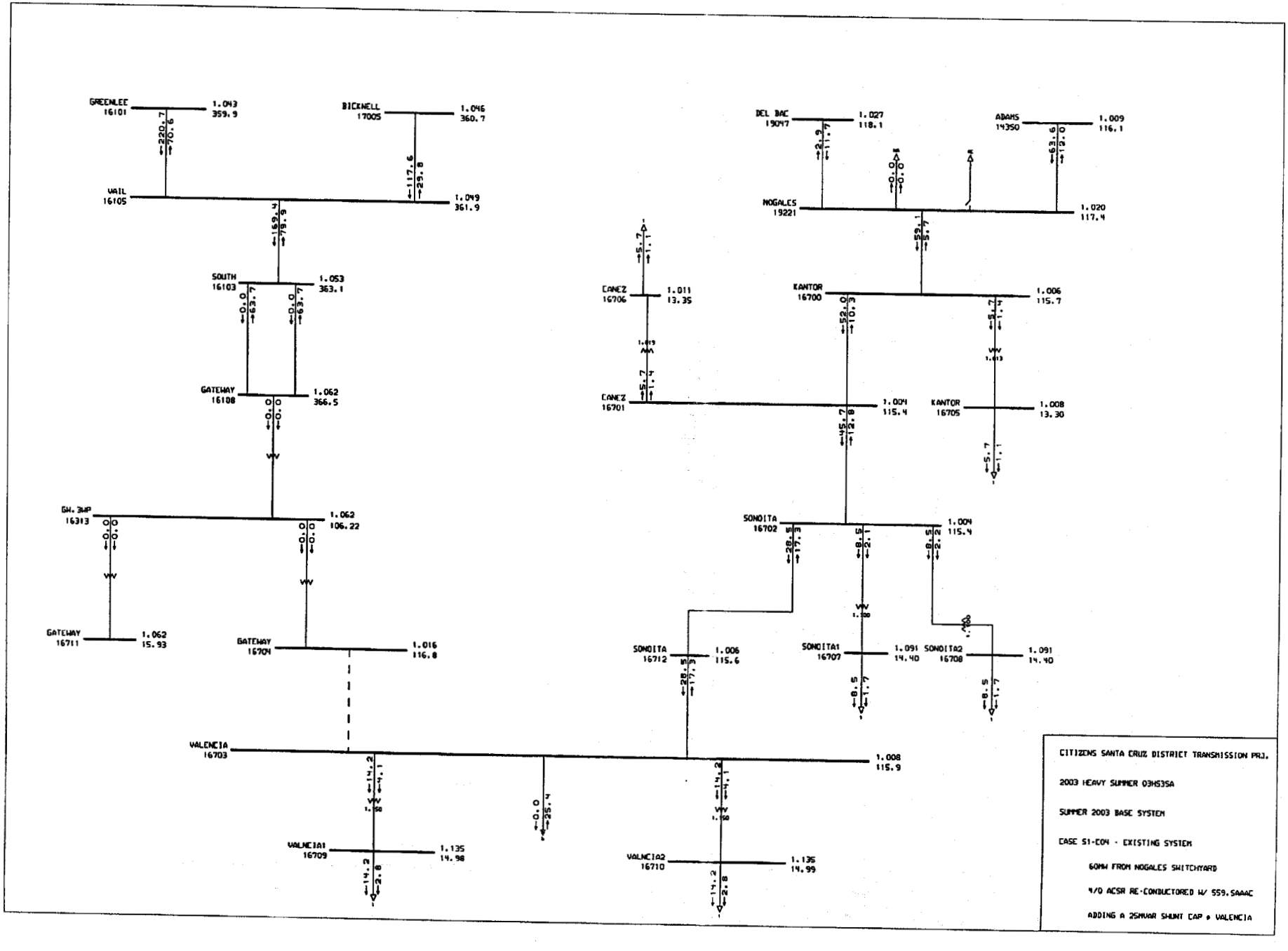
GREENLEE 16101 1.043 359.9
BICKNELL 17005 1.046 360.7
VAIL 16105 1.049 361.9
SOUTH 16103 1.053 363.1
GATEWAY 16108 1.062 366.5
GW.3WP 16313 1.062 106.22
GATEWAY 16711 1.062 15.93
GATEWAY 16704 1.016 116.8
DEL BAC 19047 1.027 118.1
ADAMS 14350 1.009 116.1
NOGALES 19221 1.020 117.4
CANEZ 16706 1.011 13.35
KANTOR 16700 1.006 115.7
CANEZ 16701 1.004 115.4
KANTOR 16705 1.008 13.30
SONOITA 16702 1.004 115.4
SONOITA 16712 1.006 115.6
SONOITA1 16707 1.091 14.40
SONOITA2 16708 1.091 14.40
VALENCIA 16703 1.008 115.9
VALNCIA1 16709 1.135 14.98
VALNCIA2 16710 1.135 14.99
CITIZENS SANTA CRUZ DISTRICT TRANSMISSION PRJ.
2003 HEAVY SUMMER 03HS3SA
SUMMER 2003 BASE SYSTEM
CASE S1-CON - EXISTING SYSTEM
60MW FROM NOGALES SWITCHYARD
4/0 ACSR RE-CONDUCTORED W/ 559.5AAAC
ADDING A 25MVAR SHUNT CAP @ VALENCIA

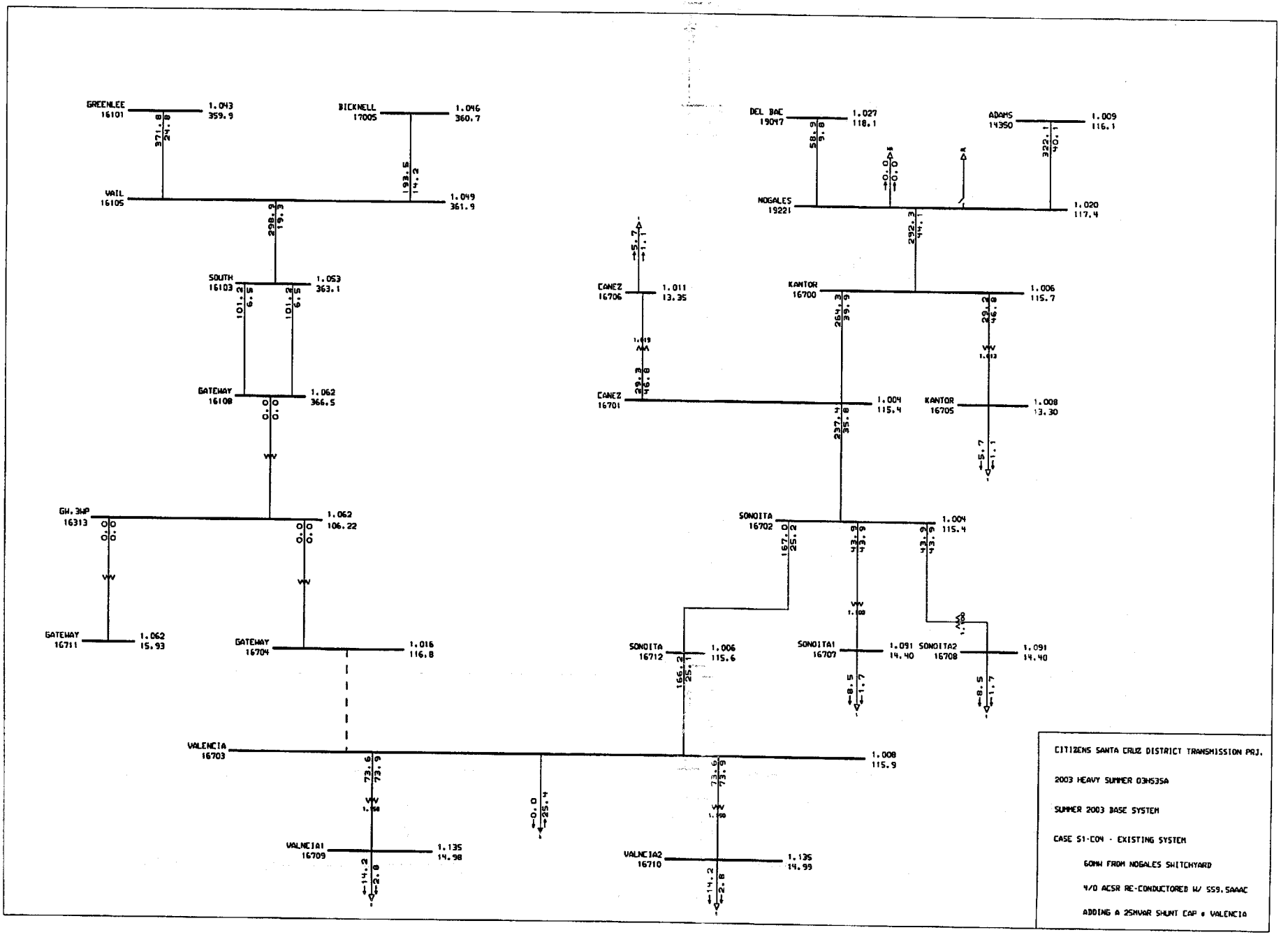
GREENLEE 16101 1.043 359.9
BICKNELL 17005 1.046 360.7
VAIL 16105 1.049 361.9
SOUTH 16103 1.053 363.1
GATEWAY 16108 1.062 366.5
GW.3WP 16313 1.062 106.22
GATEWAY 16711 1.062 15.93
GATEWAY 16704 1.016 116.8
VALENCIA 16703 1.008 115.9
VALNCIA1 16709 1.135 14.98
VALNCIA2 16710 1.135 14.99
DEL BAC 19047 1.027 118.1
ADAMS 14350 1.009 116.1
NOGALES 19221 1.020 117.4
CANEZ 16706 1.011 13.35
KANTOR 16700 1.006 115.7
CANEZ 16701 1.004 115.4
KANTOR 16705 1.008 13.30
SONOITA 16702 1.004 115.4
SONOITA 16712 1.006 115.6
SONOITA1 16707 1.091 14.40
SONOITA2 16708 1.091 14.40
CITIZENS SANTA CRUZ DISTRICT TRANSMISSION PRJ.
2003 HEAVY SUMMER 03HS3SA
SUMMER 2003 BASE SYSTEM
CASE S1-CON - EXISTING SYSTEM
60MW FROM NOGALES SWITCHYARD
4/0 ACSR RE-CONDUCTORED W/ SSS.SAAAC
ADDING A 25MVAR SHUNT CAP @ VALENCIA

WESTERN SYSTEMS COORDINATING COUNCIL
2003 HS3-SA APPROVED BASE CASE

--From-	--NAME--	--KV--	---To--	--NAME--	--KV--	CK	---P---	---Q---	--MVA--	-AMPS--	-%rate-	-rate--	unit	-Af	-At	-Ar	-Zf	-Zt	-Zo	-Ploss
16703	VALENCIA	115.00	16709	VALNCIA1	13.20	1	14.2	4.1	14.8	73.6	73.9	20.0	Mva	14	14	14	10	10	10	-0.0
16703	VALENCIA	115.00	16710	VALNCIA2	13.20	1	14.2	4.1	14.8	73.6	73.9	20.0	Mva	14	14	14	10	10	10	0.0
16101	GREENLEE	345.00	16104	SPRINGR	345.00	1	-362.8	53.9	366.8	588.5	48.1	1246.7	Amp	14	14	14	10	160	160	6.4
16701	CANEZ	115.00	16706	CANEZ	13.20	1	5.7	1.4	5.9	29.3	46.8	12.5	Mva	14	14	14	10	10	10	-0.0
16700	KANTOR	115.00	16705	KANTOR	13.20	1	5.7	1.4	5.9	29.2	46.8	12.5	Mva	14	14	14	10	10	10	0.0
16700	KANTOR	115.00	19221	NOGALES	115.00	1	-57.6	8.9	58.3	291.0	44.1	662.7	Amp	14	14	14	10	10	10	1.4
16702	SONOITA	115.00	16708	SONOITA2	13.20	1	8.5	2.2	8.8	43.9	43.9	20.0	Mva	14	14	14	10	10	10	-0.0
16702	SONOITA	115.00	16707	SONOITA1	13.20	1	8.5	2.1	8.8	43.9	43.9	20.0	Mva	14	14	14	10	10	10	0.0
14350	ADAMS	115.00	19221	NOGALES	115.00	1	63.6	-12.0	64.8	322.1	40.1	803.3	Amp	14	14	14	10	10	140	1.5
16700	KANTOR	115.00	16701	CANEZ	115.00	1	52.0	-10.3	53.0	264.3	39.9	662.7	Amp	14	14	14	10	10	10	0.6
16103	SOUTH	345.00	16306	SO.3WP2	100.00	1	242.3	28.6	244.0	387.9	36.4	672.0	Mva	14	14	14	10	160	160	0.1
16701	CANEZ	115.00	16702	SONOITA	115.00	1	45.7	-12.8	47.5	237.4	35.8	662.7	Amp	14	14	14	10	10	10	0.1
16105	VAIL	345.00	16308	VAIL.3WP	100.00	1	166.2	82.7	185.6	296.2	27.9	672.0	Mva	14	14	14	10	160	160	0.0
16702	SONOITA	115.00	16712	SONOITA	115.00	1	28.5	-17.3	33.4	167.0	25.2	662.7	Amp	14	14	14	10	10	10	0.0
16703	VALENCIA	115.00	16712	SONOITA	115.00	1	-28.4	17.2	33.2	165.3	25.1	662.7	Amp	14	14	14	10	10	10	0.0
16101	GREENLEE	345.00	16105	VAIL	345.00	1	220.7	-70.6	231.7	371.8	24.8	1499.4	Amp	14	14	14	10	10	160	2.6
16103	SOUTH	345.00	16107	WESTWING	345.00	1	-73.1	30.4	79.2	125.8	20.7	1124.6	Amp	14	14	14	10	160	160	0.5
16103	SOUTH	345.00	16105	VAIL	345.00	1	-169.2	68.4	182.5	290.2	19.3	1548.0	Amp	14	14	14	10	10	160	0.2
16105	VAIL	345.00	17005	BICKNELL	345.00	1	-117.6	29.8	121.3	193.5	15.0	1365.1	Amp	14	14	14	10	10	170	0.1
16101	GREENLEE	345.00	17010	GREEN-AE	345.00	1	-87.4	20.9	89.9	144.2	10.6	1365.1	Amp	14	14	14	10	170	170	0.0
19047	DEL BAC	115.00	19221	NOGALES	115.00	1	-2.9	11.7	12.1	58.9	10.5	602.5	Amp	14	14	14	10	10	140	0.0
19047	DEL BAC	115.00	19064	TUCSON	115.00	1	-1.4	-8.8	8.9	43.7	7.3	602.5	Amp	14	14	14	10	191	191	0.0
16103	SOUTH	345.00	16108	GATEWAY	345.00	1	0.0	-63.7	63.7	101.2	6.5	1548.0	Amp	14	14	4	10	10	160	0.0
16103	SOUTH	345.00	16108	GATEWAY	345.00	2	0.0	-63.7	63.7	101.2	6.5	1548.0	Amp	14	14	4	10	10	160	0.0
19047	DEL BAC	115.00	19201	BLACKMTN	115.00	1	4.3	-2.9	5.2	25.3	4.2	602.5	Amp	14	14	14	10	140	140	0.0
16313	GW.3WP	100.00	16704	GATEWAY	115.00	1	0.0	0.0	0.0	0.0	0.0	100.0	Mva	14	14	14	10	10	161	0.0
16108	GATEWAY	345.00	16313	GW.3WP	100.00	1	0.0	0.0	0.0	0.0	0.0	100.0	Mva	14	14	14	10	10	161	-0.0
14350	ADAMS	115.00	17001	APACHE	115.00	1	-95.0	2.6	95.1	472.9	0.0	0.0	Amp	14	14	14	10	170	191	1.3
16313	GW.3WP	100.00	16711	GATEWAY	15.00	1	0.0	0.0	0.0	0.0	0.0	100.0	Mva	14	14	14	10	10	161	0.0

WESTERN SYSTEMS COORDINATING COUNCIL
2003 HS3-SA APPROVED BASE CASE

Zone	Zone_name	Loss_mw
10	SANTA CRUZ	8.33

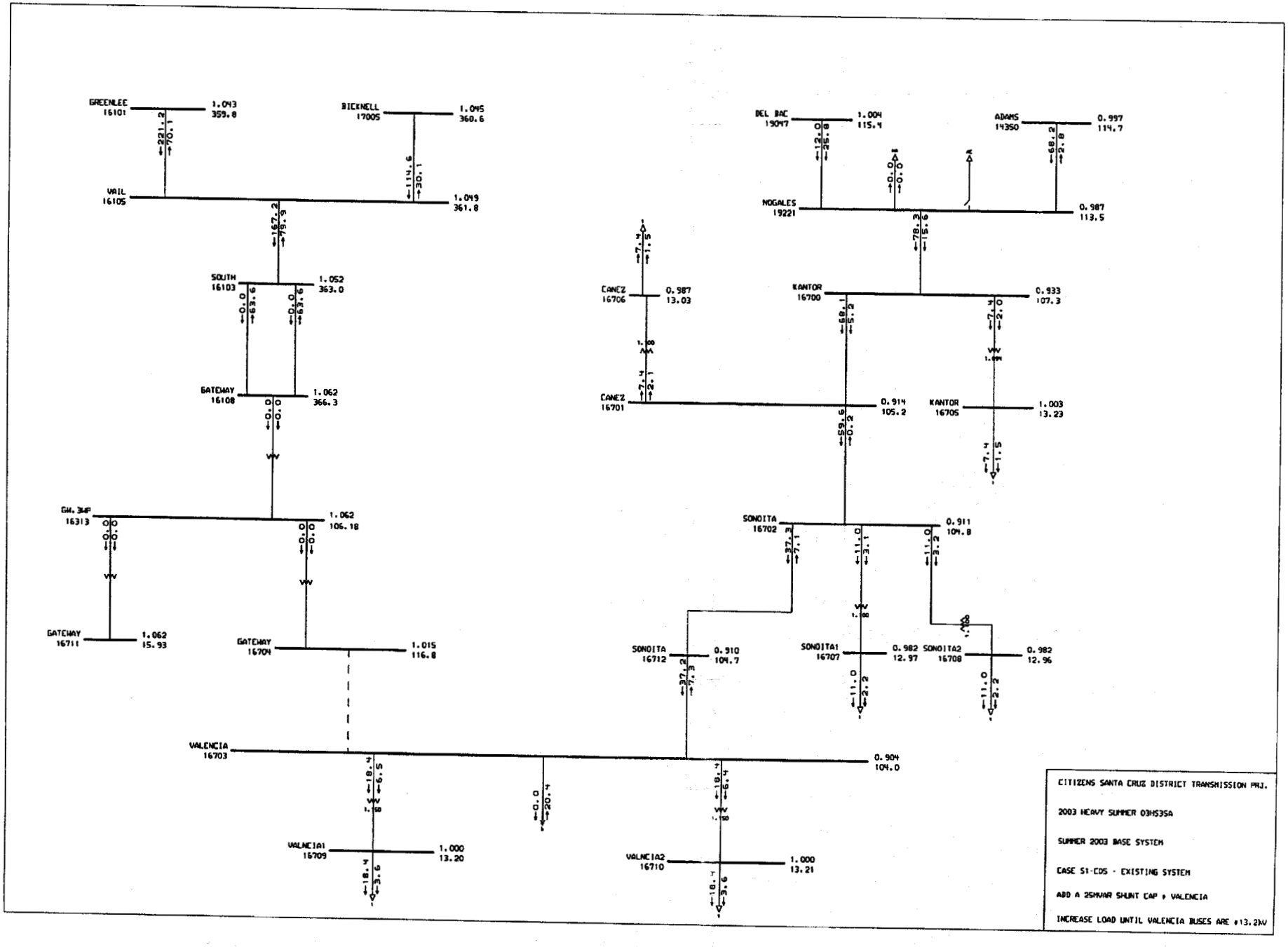
GREENLEE 16101 1.043 359.8
BICKNELL 17005 1.045 360.6
VAIL 16105 1.049 361.8
SOUTH 16103 1.052 363.0
GATEWAY 16108 1.062 366.3
GW.3WP 16313 1.062 106.18
GATEWAY 16711 1.062 15.93
GATEWAY 16704 1.015 116.8
DEL BAC 19047 1.004 115.4
ADAMS 14350 0.997 114.7
NOGALES 19221 0.987 113.5
CANEZ 16706 0.987 13.03
KANTOR 16700 0.933 107.3
CANEZ 16701 0.914 105.2
KANTOR 16705 1.003 13.23
SONOITA 16702 0.911 104.8
SONOITA 16712 0.910 104.7
SONOITA1 16707 0.982 12.97
SONOITA2 16708 0.982 12.96
VALENCIA 16703 0.904 104.0
VALNCIA1 16709 1.000 13.20
VALNCIA2 16710 1.000 13.21
CITIZENS SANTA CRUZ DISTRICT TRANSMISSION PRJ.
2003 HEAVY SUMMER 03HS3SA
SUMMER 2003 BASE SYSTEM
CASE S1-CDS - EXISTING SYSTEM
ADD A 25MVAR SHUNT CAP @ VALENCIA
INCREASE LOAD UNTIL VALENCIA BUSES ARE @13.2KV

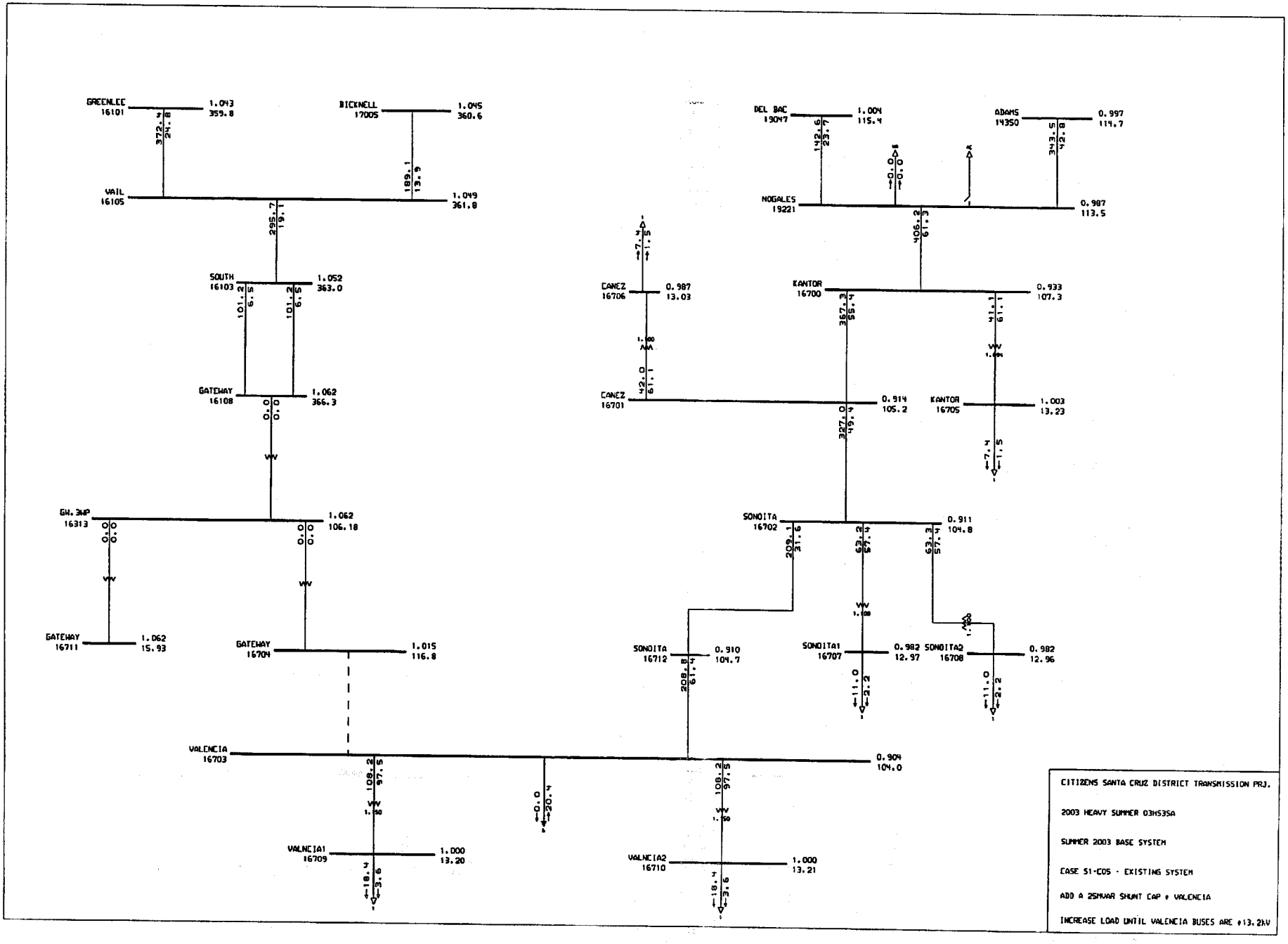
GREENLEE 16101 1.043 359.8
BICKNELL 17005 1.045 360.6
VAIL 16105 1.049 361.8
SOUTH 16103 1.052 363.0
GATEWAY 16108 1.062 366.3
GW.3WP 16313 1.062 106.18
GATEWAY 16711 1.062 15.93
GATEWAY 16704 1.015 116.8
VALENCIA 16703 0.904 104.0
VALNCIA1 16709 1.000 13.20
VALNCIA2 16710 1.000 13.21
SONOITA 16712 0.910 104.7
SONOITA 16702 0.911 104.8
SONOITA1 16707 0.982 12.97
SONOITA2 16708 0.982 12.96
CANEZ 16706 0.987 13.03
CANEZ 16701 0.914 105.2
KANTOR 16700 0.933 107.3
KANTOR 16705 1.003 13.23
DEL BAC 19047 1.004 115.4
ADAMS 14350 0.997 114.7
NOGALES 19221 0.987 113.5
CITIZENS SANTA CRUZ DISTRICT TRANSMISSION PRJ.
2003 HEAVY SUMMER 03HS3SA
SUMMER 2003 BASE SYSTEM
CASE S1-C05 - EXISTING SYSTEM
ADD A 25MVAR SHUNT CAP @ VALENCIA
INCREASE LOAD UNTIL VALENCIA BUSES ARE @13.2kV

WESTERN SYSTEMS COORDINATING COUNCIL
2003 HS3-SA APPROVED BASE CASE

--From-	--NAME--	--KV--	---To--	--NAME--	--KV--	CK	---P---	---Q---	--MVA--	-AMPS--	-%rate-	-rate--	unit	-Af	-At	-Ar	-Zf	-Zt	-Zo	-Ploss
16703	VALENCIA	115.00	16709	VALNCIA1	13.20	1	18.4	6.5	19.5	108.2	97.5	20.0	Mva	14	14	14	10	10	10	0.0
16703	VALENCIA	115.00	16710	VALNCIA2	13.20	1	18.4	6.4	19.5	108.2	97.5	20.0	Mva	14	14	14	10	10	10	0.0
16700	KANTOR	115.00	19221	NOGALES	115.00	1	-75.4	-7.2	75.8	407.7	61.5	662.7	Amp	14	14	14	10	10	10	2.9
16703	VALENCIA	115.00	16712	SONOITA	115.00	1	-36.8	7.5	37.6	208.5	61.4	340.0	Amp	14	14	14	10	10	10	0.3
16701	CANEZ	115.00	16706	CANEZ	13.20	1	7.4	2.1	7.6	42.0	61.1	12.5	Mva	14	14	14	10	10	10	0.0
16700	KANTOR	115.00	16705	KANTOR	13.20	1	7.4	2.0	7.6	41.1	61.1	12.5	Mva	14	14	14	10	10	10	0.0
16702	SONOITA	115.00	16708	SONOITA2	13.20	1	11.0	3.2	11.5	63.3	57.4	20.0	Mva	14	14	14	10	10	10	0.0
16702	SONOITA	115.00	16707	SONOITA1	13.20	1	11.0	3.1	11.5	63.2	57.4	20.0	Mva	14	14	14	10	10	10	-0.0
16700	KANTOR	115.00	16701	CANEZ	115.00	1	68.1	5.2	68.3	367.3	55.5	662.7	Amp	14	14	14	10	10	10	1.1
16701	CANEZ	115.00	16702	SONOITA	115.00	1	59.6	-0.2	59.6	327.1	49.4	662.7	Amp	14	14	14	10	10	10	0.2
16101	GREENLEE	345.00	16104	SPRINGR	345.00	1	-364.7	54.3	368.7	591.6	48.3	1246.7	Amp	14	14	14	10	160	160	6.4
14350	ADAMS	115.00	19221	NOGALES	115.00	1	68.2	-2.8	68.2	343.5	42.8	803.3	Amp	14	14	14	10	10	140	1.7
16103	SOUTH	345.00	16306	SO.3WP2	100.00	1	242.6	28.5	244.3	388.6	36.4	672.0	Mva	14	14	14	10	160	160	0.1
16702	SONOITA	115.00	16712	SONOITA	115.00	1	37.3	-7.1	37.9	209.1	31.6	662.7	Amp	14	14	14	10	10	10	0.1
16105	VAIL	345.00	16308	VAIL.3WP	100.00	1	166.0	82.7	185.4	296.0	27.8	672.0	Mva	14	14	14	10	160	160	0.0
16101	GREENLEE	345.00	16105	VAIL	345.00	1	221.2	-70.1	232.1	372.4	24.8	1499.4	Amp	14	14	14	10	10	160	2.6
19047	DEL BAC	115.00	19221	NOGALES	115.00	1	12.0	25.8	28.5	142.6	24.3	602.5	Amp	14	14	14	10	10	140	0.0
16103	SOUTH	345.00	16107	WESTWING	345.00	1	-75.7	30.4	81.6	129.7	20.9	1124.6	Amp	14	14	14	10	160	160	0.5
16103	SOUTH	345.00	16105	VAIL	345.00	1	-167.0	68.3	180.4	286.9	19.1	1548.0	Amp	14	14	14	10	10	160	0.1
19047	DEL BAC	115.00	19064	TUCSON	115.00	1	-11.6	-18.2	21.6	108.0	17.9	602.5	Amp	14	14	14	10	191	191	0.0
16105	VAIL	345.00	17005	BICKNELL	345.00	1	-114.6	30.1	118.5	189.1	14.7	1365.1	Amp	14	14	14	10	10	170	0.1
16101	GREENLEE	345.00	17010	GREEN-AE	345.00	1	-85.2	20.2	87.6	140.6	10.3	1365.1	Amp	14	14	14	10	170	170	0.0
16103	SOUTH	345.00	16108	GATEWAY	345.00	2	0.0	-63.6	63.6	101.2	6.5	1548.0	Amp	14	14	4	10	10	160	0.0
16103	SOUTH	345.00	16108	GATEWAY	345.00	1	0.0	-63.6	63.6	101.2	6.5	1548.0	Amp	14	14	4	10	10	160	0.0
19047	DEL BAC	115.00	19201	BLACKMTN	115.00	1	-0.5	-7.6	7.6	38.2	6.3	602.5	Amp	14	14	14	10	140	140	0.0
16108	GATEWAY	345.00	16313	GW.3WP	100.00	1	0.0	0.0	0.0	0.0	0.0	100.0	Mva	14	14	14	10	10	161	-0.0
16313	GW.3WP	100.00	16704	GATEWAY	115.00	1	0.0	0.0	0.0	0.0	0.0	100.0	Mva	14	14	14	10	10	161	0.0
14350	ADAMS	115.00	17001	APACHE	115.00	1	-99.6	-6.6	99.8	502.4	0.0	0.0	Amp	14	14	14	10	170	191	1.5
16313	GW.3WP	100.00	16711	GATEWAY	15.00	1	0.0	0.0	0.0	0.0	0.0	100.0	Mva	14	14	14	10	10	161	0.0

WESTERN SYSTEMS COORDINATING COUNCIL
2003 HS3-SA APPROVED BASE CASE

Zone	Zone_name	Loss_mw
10	SANTA CRUZ	11.20

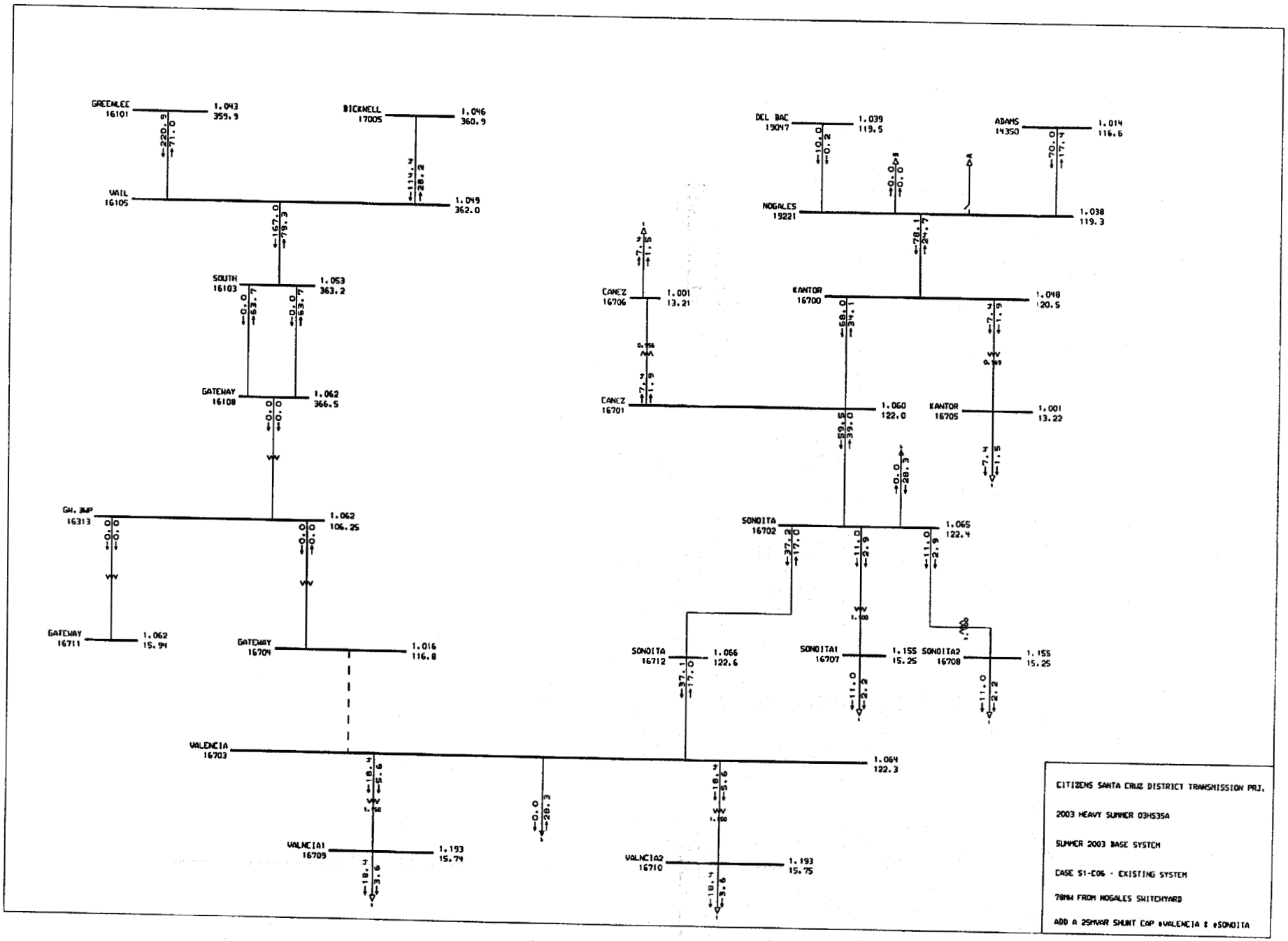
GREENLEE 16101 1.043 359.9
BICKNELL 17005 1.046 360.9
VAIL 16105 1.049 362.0
SOUTH 16103 1.053 363.2
GATEWAY 16108 1.062 366.5
GW. 3WP 16313 1.062 106.25
GATEWAY 16711 1.062 15.94
GATEWAY 16704 1.016 116.8
VALENCIA 16703 1.064 122.3
VALNCIA1 16709 1.193 15.74
VALNCIA2 16710 1.193 15.75
SONDITA 16712 1.066 122.6
SONDITA 16702 1.065 122.4
SONDITA1 16707 1.155 15.25
SONDITA2 16708 1.155 15.25
CANEZ 16706 1.001 13.21
CANEZ 16701 1.060 122.0
DEL BAC 19047 1.039 119.5
NOGALES 19221 1.038 119.3
ADAMS 14350 1.014 116.6
KANTOR 16700 1.048 120.5
KANTOR 16705 1.001 13.22
CITIZENS SANTA CRUZ DISTRICT TRANSMISSION PRJ.
2003 HEAVY SUMMER 03HS35A
SUMMER 2003 BASE SYSTEM
CASE S1-C06 - EXISTING SYSTEM
78MW FROM NOGALES SWITCHYARD
ADD A 25MVAR SHUNT CAP @VALENCIA & @SONDITA

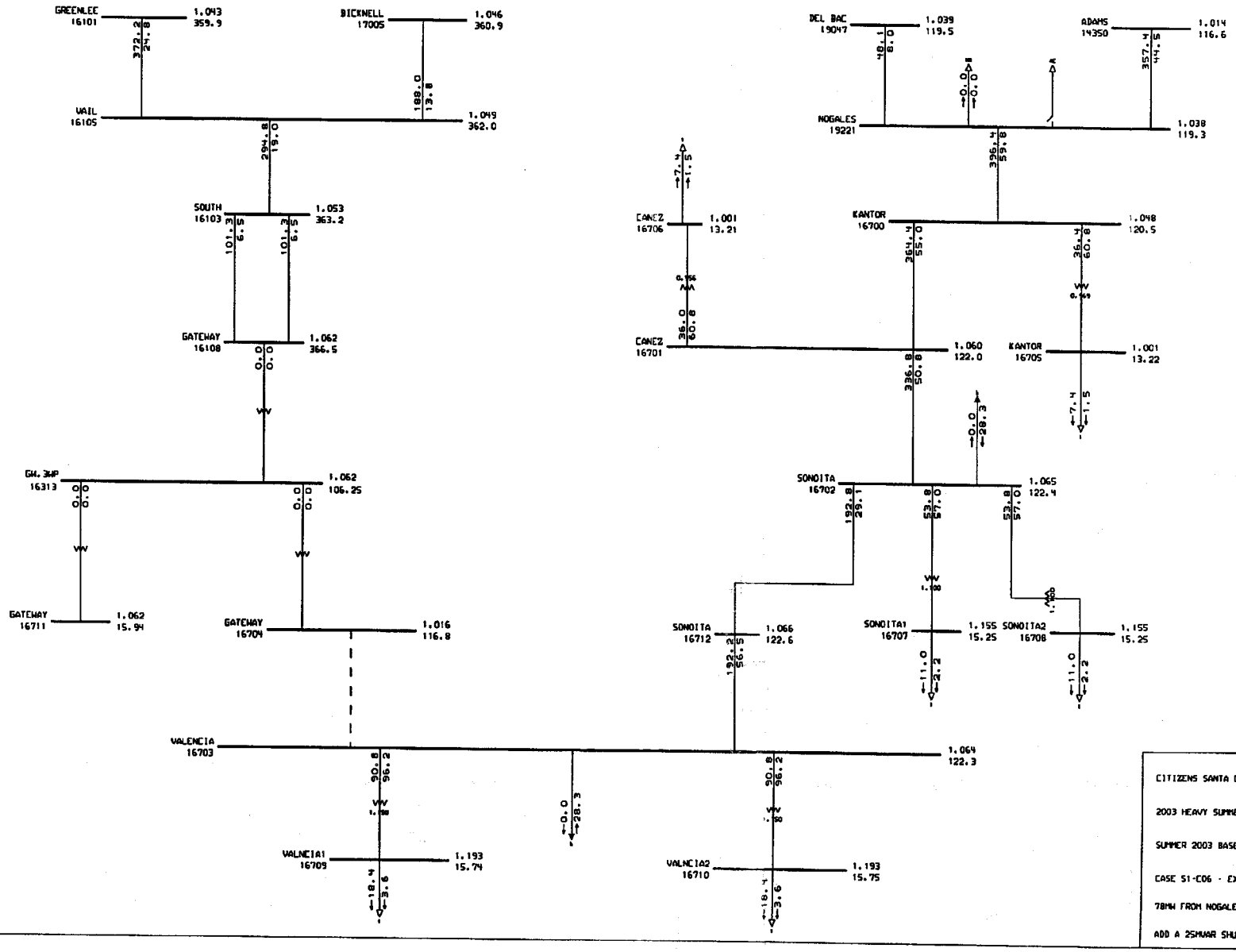
GREENLEE 16101 1.043 359.9
BICKNELL 17005 1.046 360.9
VAIL 16105 1.049 362.0
SOUTH 16103 1.053 363.2
GATEWAY 16108 1.062 366.5
GW. 3WP 16313 1.062 106.25
GATEWAY 16711 1.062 15.94
GATEWAY 16704 1.016 116.8
VALENCIA 16703 1.064 122.3
VALNCIA1 16709 1.193 15.74
VALNCIA2 16710 1.193 15.75
DEL BAC 19047 1.039 119.5
ADAMS 14350 1.014 116.6
NOGALES 19221 1.038 119.3
CANEZ 16706 1.001 13.21
CANEZ 16701 1.060 122.0
KANTOR 16700 1.048 120.5
KANTOR 16705 1.001 13.22
SONOITA 16702 1.065 122.4
SONOITA 16712 1.066 122.6
SONOITA1 16707 1.155 15.25
SONOITA2 16708 1.155 15.25
CITIZENS SANTA CRUZ DISTRICT TRANSMISSION PRJ.
2003 HEAVY SUMMER 03HS3SA
SUMMER 2003 BASE SYSTEM
CASE S1-C06 - EXISTING SYSTEM
78MW FROM NOGALES SWITCHYARD
ADD A 25MVAR SHUNT CAP @VALENCIA & @SONOITA

WESTERN SYSTEMS COORDINATING COUNCIL
2003 HS3-SA APPROVED BASE CASE

--From-	--NAME--	--KV--	---To--	--NAME--	--KV--	CK	---P---	---Q---	--MVA--	-AMPS--	-%rate-	-rate--	unit	-Af	-At	-Ar	-Zf	-Zt	-Zo	-Plos
16703	VALENCIA	115.00	16709	VALNCIA1	13.20	1	18.4	5.6	19.2	90.8	96.2	20.0	Mva	14	14	14	10	10	10	-0.(
16703	VALENCIA	115.00	16710	VALNCIA2	13.20	1	18.4	5.6	19.2	90.8	96.2	20.0	Mva	14	14	14	10	10	10	0.(
16700	KANTOR	115.00	16705	KANTOR	13.20	1	7.4	1.9	7.6	36.4	60.8	12.5	Mva	14	14	14	10	10	10	0.(
16701	CANEZ	115.00	16706	CANEZ	13.20	1	7.4	1.9	7.6	36.0	60.8	12.5	Mva	14	14	14	10	10	10	0.(
16700	KANTOR	115.00	19221	NOGALES	115.00	1	-75.4	32.2	81.9	392.6	59.8	662.7	Amp	14	14	14	10	10	10	2.7
16702	SONOITA	115.00	16708	SONOITA2	13.20	1	11.0	2.9	11.4	53.8	57.0	20.0	Mva	14	14	14	10	10	10	0.(
16702	SONOITA	115.00	16707	SONOITA1	13.20	1	11.0	2.9	11.4	53.8	57.0	20.0	Mva	14	14	14	10	10	10	0.(
16703	VALENCIA	115.00	16712	SONOITA	115.00	1	-36.8	17.1	40.6	191.4	56.5	340.0	Amp	14	14	14	10	10	10	0.3
16700	KANTOR	115.00	16701	CANEZ	115.00	1	68.0	-34.1	76.1	364.5	55.0	662.7	Amp	14	14	14	10	10	10	1.7
16701	CANEZ	115.00	16702	SONOITA	115.00	1	59.5	-39.0	71.1	336.8	50.8	662.7	Amp	14	14	14	10	10	10	0.2
16101	GREENLEE	345.00	16104	SPRINGR	345.00	1	-365.0	54.9	369.1	592.1	48.4	1246.7	Amp	14	14	14	10	160	160	6.4
14350	ADAMS	115.00	19221	NOGALES	115.00	1	70.0	-17.4	72.2	357.5	44.5	803.3	Amp	14	14	14	10	10	140	1.9
16103	SOUTH	345.00	16306	SO.3WP2	100.00	1	242.5	28.7	244.2	388.1	36.4	672.0	Mva	14	14	14	10	160	160	0.1
16702	SONOITA	115.00	16712	SONOITA	115.00	1	37.2	-17.0	40.9	192.8	29.1	662.7	Amp	14	14	14	10	10	10	0.(
16105	VAIL	345.00	16308	VAIL.3WP	100.00	1	165.7	83.3	185.4	295.8	27.8	672.0	Mva	14	14	14	10	160	160	0.(
16101	GREENLEE	345.00	16105	VAIL	345.00	1	220.9	-71.0	232.0	372.2	24.8	1499.4	Amp	14	14	14	10	10	160	2.6
16103	SOUTH	345.00	16107	WESTWING	345.00	1	-75.8	31.0	81.9	130.1	21.0	1124.6	Amp	14	14	14	10	160	160	0.5
16103	SOUTH	345.00	16105	VAIL	345.00	1	-166.8	67.7	180.0	286.1	19.0	1548.0	Amp	14	14	14	10	10	160	0.1
16105	VAIL	345.00	17005	BICKNELL	345.00	1	-114.4	28.2	117.8	188.0	14.6	1365.1	Amp	14	14	14	10	10	170	0.1
16101	GREENLEE	345.00	17010	GREEN-AE	345.00	1	-84.5	20.2	86.8	139.3	10.3	1365.1	Amp	14	14	14	10	170	170	0.(
19047	DEL BAC	115.00	19064	TUCSON	115.00	1	-10.0	-1.0	10.1	48.6	8.1	602.5	Amp	14	14	14	10	191	191	0.(
19047	DEL BAC	115.00	19221	NOGALES	115.00	1	10.0	0.2	10.0	48.1	8.0	602.5	Amp	14	14	14	10	10	140	0.(
16103	SOUTH	345.00	16108	GATEWAY	345.00	2	0.0	-63.7	63.7	101.3	6.5	1548.0	Amp	14	14	4	10	10	160	0.(
16103	SOUTH	345.00	16108	GATEWAY	345.00	1	0.0	-63.7	63.7	101.3	6.5	1548.0	Amp	14	14	4	10	10	160	0.(
19047	DEL BAC	115.00	19201	BLACKMTN	115.00	1	0.1	0.9	0.9	4.3	1.3	602.5	Amp	14	14	14	10	140	140	0.(
16313	GW.3WP	100.00	16704	GATEWAY	115.00	1	0.0	-0.0	0.0	0.0	0.0	100.0	Mva	14	14	14	10	10	161	-0.(
16108	GATEWAY	345.00	16313	GW.3WP	100.00	1	0.0	0.0	0.0	0.0	0.0	100.0	Mva	14	14	14	10	10	161	0.(
14350	ADAMS	115.00	17001	APACHE	115.00	1	-101.4	8.0	101.8	503.9	0.0	0.0	Amp	14	14	14	10	170	191	1.5
16313	GW.3WP	100.00	16711	GATEWAY	15.00	1	0.0	0.0	0.0	0.0	0.0	100.0	Mva	14	14	14	10	10	161	0.0

WESTERN SYSTEMS COORDINATING COUNCIL
2003 HS3-SA APPROVED BASE CASE

Zone	Zone_name	Loss_mw
10	SANTA CRUZ	11.00

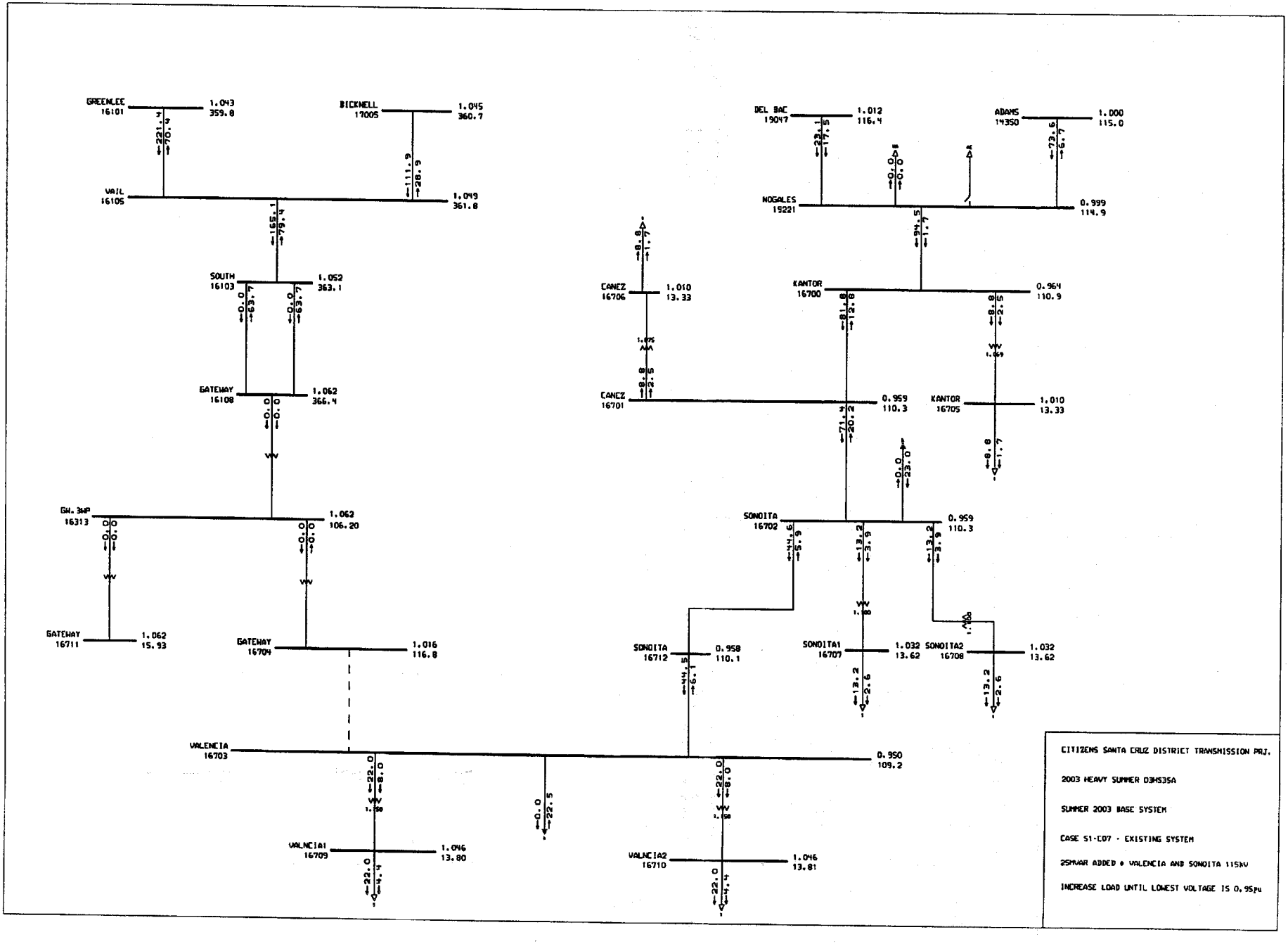
GREENLEE 16101 1.043 359.8
BICKNELL 17005 1.045 360.7
VAIL 16105 1.049 361.8
SOUTH 16103 1.052 363.1
GATEWAY 16108 1.062 366.4
GW.3WP 16313 1.062 106.20
GATEWAY 16711 1.062 15.93
GATEWAY 16704 1.016 116.8
DEL BAC 19047 1.012 116.4
ADAMS 14350 1.000 115.0
NOGALES 19221 0.999 114.9
CANEZ 16706 1.010 13.33
KANTOR 16700 0.964 110.9
CANEZ 16701 0.959 110.3
KANTOR 16705 1.010 13.33
SONOITA 16702 0.959 110.3
SONOITA 16712 0.958 110.1
SONOITA1 16707 1.032 13.62
SONOITA2 16708 1.032 13.62
VALENCIA 16703 0.950 109.2
VALNCIA1 16709 1.046 13.80
VALNCIA2 16710 1.046 13.81
CITIZENS SANTA CRUZ DISTRICT TRANSMISSION PRJ.
2003 HEAVY SUMMER D3HS35A
SUMMER 2003 BASE SYSTEM
CASE S1-C07 - EXISTING SYSTEM
25MVAR ADDED @ VALENCIA AND SONOITA 115kV
INCREASE LOAD UNTIL LOWEST VOLTAGE IS 0.95pu

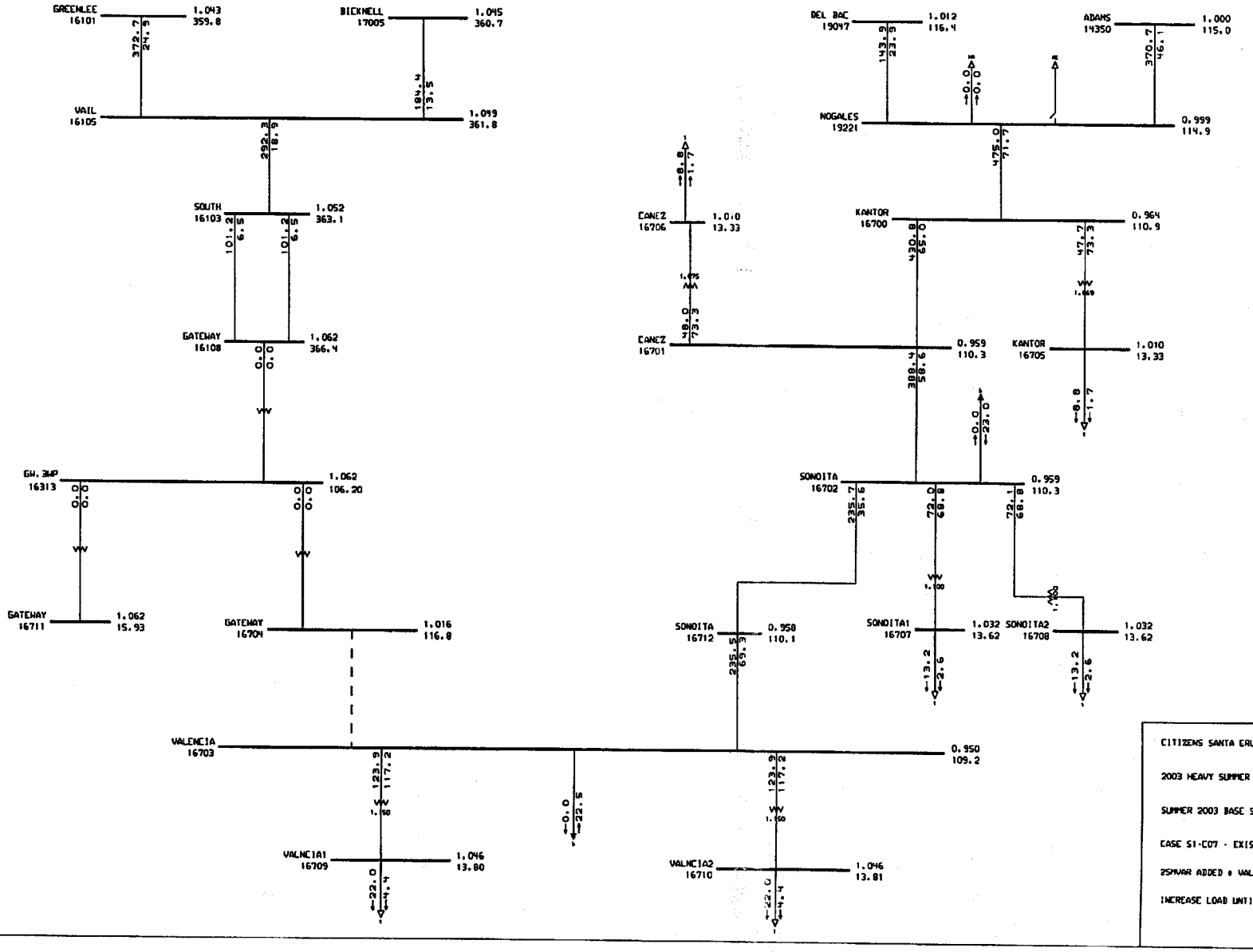

CITIZENS SANTA CRUZ DISTRICT TRANSMISSION PRJ.

2003 HEAVY SUMMER 03HS3SA

SUMMER 2003 BASE SYSTEM

CASE S1-C07 - EXISTING SYSTEM

25MVAR ADDED @ VALENCIA AND SONOITA 115kV

INCREASE LOAD UNTIL LOWEST VOLTAGE IS 0.95pu

WESTERN SYSTEMS COORDINATING COUNCIL
2003 HS3-SA APPROVED BASE CASE

--From-	--NAME--	--KV--	---To--	--NAME--	--KV--	CK	---P---	---Q---	--MVA--	-AMPS--	-%rate-	-rate--	unit	-Af	-At	-Ar	-Zf	-Zt	-Zo	-Ploss
16703	VALENCIA	115.00	16709	VALNCIA1	13.20	1	22.0	8.0	23.4	123.9	117.2	20.0	Mva	14	14	14	10	10	10	0.0
16703	VALENCIA	115.00	16710	VALNCIA2	13.20	1	22.0	8.0	23.4	123.9	117.2	20.0	Mva	14	14	14	10	10	10	0.0
16701	CANEZ	115.00	16706	CANEZ	13.20	1	8.8	2.5	9.2	48.0	73.3	12.5	Mva	14	14	14	10	10	10	0.0
16700	KANTOR	115.00	16705	KANTOR	13.20	1	8.8	2.5	9.2	47.7	73.3	12.5	Mva	14	14	14	10	10	10	0.0
16700	KANTOR	115.00	19221	NOGALES	115.00	1	-90.6	10.3	91.2	474.5	71.7	662.7	Amp	14	14	14	10	10	10	3.9
16703	VALENCIA	115.00	16712	SONOITA	115.00	1	-44.0	6.5	44.5	235.3	69.3	340.0	Amp	14	14	14	10	10	10	0.4
16702	SONOITA	115.00	16708	SONOITA2	13.20	1	13.2	3.9	13.8	72.1	68.8	20.0	Mva	14	14	14	10	10	10	0.0
16702	SONOITA	115.00	16707	SONOITA1	13.20	1	13.2	3.9	13.8	72.0	68.8	20.0	Mva	14	14	14	10	10	10	0.0
16700	KANTOR	115.00	16701	CANEZ	115.00	1	81.8	-12.8	82.8	430.8	65.0	662.7	Amp	14	14	14	10	10	10	1.5
16701	CANEZ	115.00	16702	SONOITA	115.00	1	71.4	-20.2	74.2	388.4	58.6	662.7	Amp	14	14	14	10	10	10	0.3
16101	GREENLEE	345.00	16104	SPRINGR	345.00	1	-366.6	55.0	370.7	594.7	48.6	1246.7	Amp	14	14	14	10	160	160	6.5
14350	ADAMS	115.00	19221	NOGALES	115.00	1	73.6	-6.7	73.9	370.7	46.1	803.3	Amp	14	14	14	10	10	140	2.0
16103	SOUTH	345.00	16306	SO.3WP2	100.00	1	242.8	28.7	244.5	388.8	36.5	672.0	Mva	14	14	14	10	160	160	0.1
16702	SONOITA	115.00	16712	SONOITA	115.00	1	44.6	-5.9	45.0	235.7	35.6	662.7	Amp	14	14	14	10	10	10	0.1
16105	VAIL	345.00	16308	VAIL.3WP	100.00	1	165.6	83.1	185.3	295.6	27.8	672.0	Mva	14	14	14	10	160	160	0.0
16101	GREENLEE	345.00	16105	VAIL	345.00	1	221.4	-70.4	232.3	372.8	24.9	1499.4	Amp	14	14	14	10	10	160	2.6
19047	DEL BAC	115.00	19221	NOGALES	115.00	1	23.1	17.5	29.0	143.9	24.3	602.5	Amp	14	14	14	10	10	140	0.0
16103	SOUTH	345.00	16107	WESTWING	345.00	1	-78.0	30.9	83.9	133.4	21.1	1124.6	Amp	14	14	14	10	160	160	0.5
16103	SOUTH	345.00	16105	VAIL	345.00	1	-164.9	67.8	178.3	283.5	18.9	1548.0	Amp	14	14	14	10	10	160	0.1
19047	DEL BAC	115.00	19064	TUCSON	115.00	1	-19.0	-12.6	22.8	113.0	18.8	602.5	Amp	14	14	14	10	191	191	0.0
16105	VAIL	345.00	17005	BICKNELL	345.00	1	-111.9	28.9	115.6	184.4	14.3	1365.1	Amp	14	14	14	10	10	170	0.1
16101	GREENLEE	345.00	17010	GREEN-AE	345.00	1	-82.7	19.6	85.0	136.4	10.0	1365.1	Amp	14	14	14	10	170	170	0.0
16103	SOUTH	345.00	16108	GATEWAY	345.00	1	0.0	-63.7	63.7	101.2	6.5	1548.0	Amp	14	14	4	10	10	160	0.0
16103	SOUTH	345.00	16108	GATEWAY	345.00	2	0.0	-63.7	63.7	101.2	6.5	1548.0	Amp	14	14	4	10	10	160	0.0
19047	DEL BAC	115.00	19201	BLACKMTN	115.00	1	-4.1	-4.9	6.4	31.9	5.3	602.5	Amp	14	14	14	10	140	140	0.0
16313	GW.3WP	100.00	16704	GATEWAY	115.00	1	0.0	-0.0	0.0	0.0	0.0	100.0	Mva	14	14	14	10	10	161	0.0
16108	GATEWAY	345.00	16313	GW.3WP	100.00	1	0.0	0.0	0.0	0.0	0.0	100.0	Mva	14	14	14	10	10	161	0.0
14350	ADAMS	115.00	17001	APACHE	115.00	1	-105.0	-2.7	105.0	526.9	0.0	0.0	Amp	14	14	14	10	170	191	1.6
16313	GW.3WP	100.00	16711	GATEWAY	15.00	1	0.0	0.0	0.0	0.0	0.0	100.0	Mva	14	14	14	10	10	161	0.0

WESTERN SYSTEMS COORDINATING COUNCIL
2003 HS3-SA APPROVED BASE CASE

Zone	Zone_name	Loss_mw
10	SANTA CRUZ	13.34

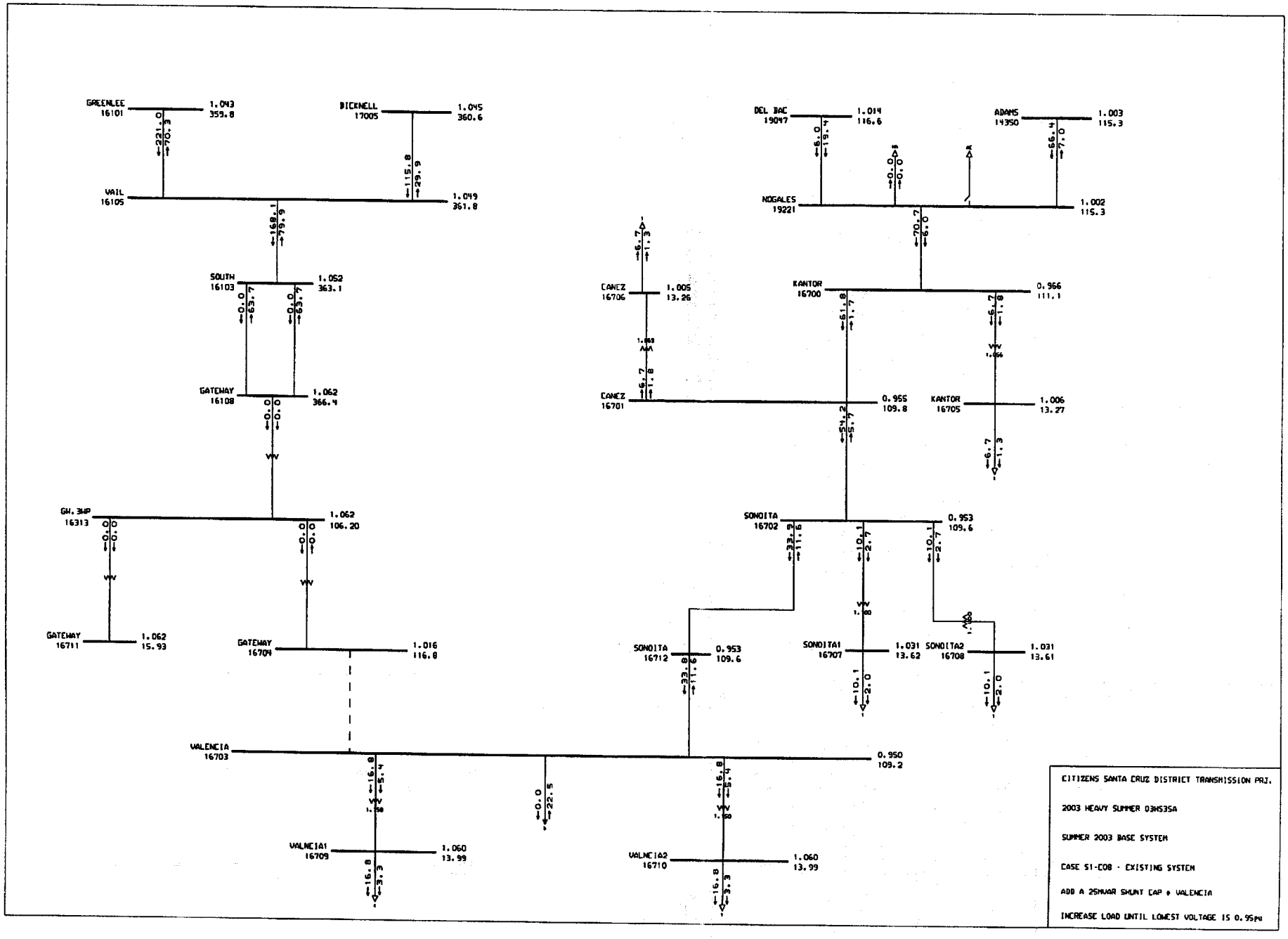
GREENLEE 16101 1.043 359.8
BICKNELL 17005 1.045 360.6
VAIL 16105 1.049 361.8
SOUTH 16103 1.052 363.1
GATEWAY 16108 1.062 366.4
GW.3WP 16313 1.062 106.20
GATEWAY 16711 1.062 15.93
GATEWAY 16704 1.016 116.8
VALENCIA 16703 0.950 109.2
VALNCIA1 16709 1.060 13.99
VALNCIA2 16710 1.060 13.99
DEL BAC 19047 1.014 116.6
ADAMS 14350 1.003 115.3
NOGALES 19221 1.002 115.3
CANEZ 16706 1.005 13.26
CANEZ 16701 0.955 109.8
KANTOR 16700 0.966 111.1
KANTOR 16705 1.006 13.27
SONOITA 16702 0.953 109.6
SONOITA 16712 0.953 109.6
SONOITA1 16707 1.031 13.62
SONOITA2 16708 1.031 13.61
CITIZENS SANTA CRUZ DISTRICT TRANSMISSION PRJ.
2003 HEAVY SUMMER 03HS3SA
SUMMER 2003 BASE SYSTEM
CASE S1-C08 - EXISTING SYSTEM
ADD A 25MVAR SHUNT CAP @ VALENCIA
INCREASE LOAD UNTIL LOWEST VOLTAGE IS 0.95PU

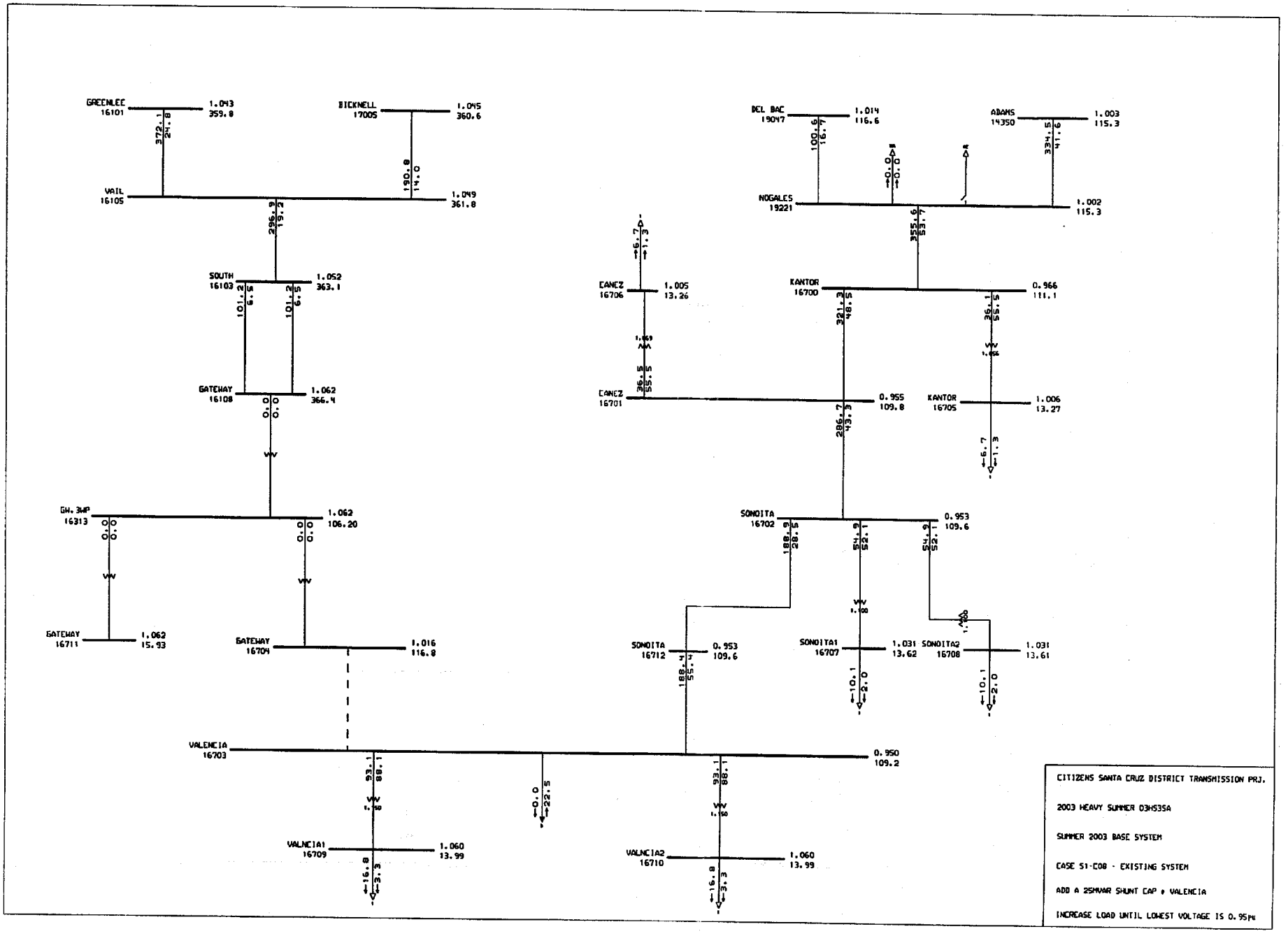
GREENLEE 16101 1.043 359.8
BICKNELL 17005 1.045 360.6
VAIL 16105 1.049 361.8
SOUTH 16103 1.052 363.1
GATEWAY 16108 1.062 366.4
GH. 3WP 16313 1.062 106.20
GATEWAY 16711 1.062 15.93
GATEWAY 16704 1.016 116.8
VALENCIA 16703 0.950 109.2
VALNCIA1 16709 1.060 13.99
VALNCIA2 16710 1.060 13.99
DEL BAC 19047 1.014 116.6
ADAMS 14350 1.003 115.3
NOGALES 19221 1.002 115.3
CANEZ 16706 1.005 13.26
KANTOR 16700 0.966 111.1
CANEZ 16701 0.955 109.8
KANTOR 16705 1.006 13.27
SONOITA 16702 0.953 109.6
SONOITA 16712 0.953 109.6
SONOITA1 16707 1.031 13.62
SONOITA2 16708 1.031 13.61
CITIZENS SANTA CRUZ DISTRICT TRANSMISSION PRJ.
2003 HEAVY SUMMER D3HS3SA
SUMMER 2003 BASE SYSTEM
CASE S1-C08 - EXISTING SYSTEM
ADD A 25MVAR SHUNT CAP @ VALENCIA
INCREASE LOAD UNTIL LOWEST VOLTAGE IS 0.95PU

WESTERN SYSTEMS COORDINATING COUNCIL
2003 HS3-SA APPROVED BASE CASE

--From-	--NAME--	--KV--	---To--	--NAME--	--KV--	CK	---P---	---Q---	--MVA--	-AMPS--	-%rate-	-rate--	unit	-Af	-At	-Ar	-Zf	-Zt	-Zo	-Ploss
16703	VALENCIA	115.00	16709	VALNCIA1	13.20	1	16.8	5.4	17.6	93.1	88.1	20.0	Mva	14	14	14	10	10	10	-0.0
16703	VALENCIA	115.00	16710	VALNCIA2	13.20	1	16.8	5.4	17.6	93.1	88.1	20.0	Mva	14	14	14	10	10	10	-0.0
16701	CANEZ	115.00	16706	CANEZ	13.20	1	6.7	1.8	6.9	36.5	55.5	12.5	Mva	14	14	14	10	10	10	-0.0
16700	KANTOR	115.00	16705	KANTOR	13.20	1	6.7	1.8	6.9	36.1	55.5	12.5	Mva	14	14	14	10	10	10	0.0
16703	VALENCIA	115.00	16712	SONOITA	115.00	1	-33.5	11.8	35.5	187.9	55.4	340.0	Amp	14	14	14	10	10	10	0.3
16700	KANTOR	115.00	19221	NOGALES	115.00	1	-68.5	-0.1	68.5	356.1	53.7	662.7	Amp	14	14	14	10	10	10	2.2
16702	SONOITA	115.00	16708	SONOITA2	13.20	1	10.1	2.7	10.4	54.9	52.1	20.0	Mva	14	14	14	10	10	10	0.0
16702	SONOITA	115.00	16707	SONOITA1	13.20	1	10.1	2.7	10.4	54.9	52.1	20.0	Mva	14	14	14	10	10	10	-0.0
16700	KANTOR	115.00	16701	CANEZ	115.00	1	61.8	-1.7	61.8	321.3	48.5	662.7	Amp	14	14	14	10	10	10	0.8
16101	GREENLEE	345.00	16104	SPRINGR	345.00	1	-363.9	54.2	367.9	590.4	48.2	1246.7	Amp	14	14	14	10	160	160	6.4
16701	CANEZ	115.00	16702	SONOITA	115.00	1	54.2	-5.7	54.5	286.8	43.3	662.7	Amp	14	14	14	10	10	10	0.1
14350	ADAMS	115.00	19221	NOGALES	115.00	1	66.4	-7.0	66.8	334.5	41.6	803.3	Amp	14	14	14	10	10	140	1.6
16103	SOUTH	345.00	16306	SO.3WP2	100.00	1	242.5	28.6	244.2	388.3	36.4	672.0	Mva	14	14	14	10	160	160	0.1
16702	SONOITA	115.00	16712	SONOITA	115.00	1	33.9	-11.6	35.8	188.9	28.5	662.7	Amp	14	14	14	10	10	10	0.0
16105	VAIL	345.00	16308	VAIL.3WP	100.00	1	166.1	82.7	185.5	296.0	27.8	672.0	Mva	14	14	14	10	160	160	0.0
16101	GREENLEE	345.00	16105	VAIL	345.00	1	221.0	-70.3	231.9	372.2	24.8	1499.4	Amp	14	14	14	10	10	160	2.6
16103	SOUTH	345.00	16107	WESTWING	345.00	1	-74.7	30.4	80.6	128.2	20.8	1124.6	Amp	14	14	14	10	160	160	0.5
16103	SOUTH	345.00	16105	VAIL	345.00	1	-167.9	68.3	181.2	288.2	19.2	1548.0	Amp	14	14	14	10	10	160	0.1
19047	DEL BAC	115.00	19221	NOGALES	115.00	1	6.0	19.4	20.3	100.6	17.4	602.5	Amp	14	14	14	10	10	140	0.0
16105	VAIL	345.00	17005	BICKNELL	345.00	1	-115.8	29.9	119.6	190.8	14.8	1365.1	Amp	14	14	14	10	10	170	0.1
19047	DEL BAC	115.00	19064	TUCSON	115.00	1	-7.5	-14.0	15.8	78.4	13.0	602.5	Amp	14	14	14	10	191	191	0.0
16101	GREENLEE	345.00	17010	GREEN-AE	345.00	1	-86.1	20.5	88.5	142.0	10.4	1365.1	Amp	14	14	14	10	170	170	0.0
16103	SOUTH	345.00	16108	GATEWAY	345.00	2	0.0	-63.7	63.7	101.2	6.5	1548.0	Amp	14	14	4	10	10	160	0.0
16103	SOUTH	345.00	16108	GATEWAY	345.00	1	0.0	-63.7	63.7	101.2	6.5	1548.0	Amp	14	14	4	10	10	160	0.0
19047	DEL BAC	115.00	19201	BLACKMTN	115.00	1	1.4	-5.5	5.6	28.0	4.6	602.5	Amp	14	14	14	10	140	140	0.0
16313	GW.3WP	100.00	16704	GATEWAY	115.00	1	0.0	-0.0	0.0	0.0	0.0	100.0	Mva	14	14	14	10	10	161	0.0
16108	GATEWAY	345.00	16313	GW.3WP	100.00	1	0.0	0.0	0.0	0.0	0.0	100.0	Mva	14	14	14	10	10	161	0.0
14350	ADAMS	115.00	17001	APACHE	115.00	1	-97.8	-2.4	97.9	490.0	0.0	0.0	Amp	14	14	14	10	170	191	1.4
16313	GW.3WP	100.00	16711	GATEWAY	15.00	1	0.0	0.0	0.0	0.0	0.0	100.0	Mva	14	14	14	10	10	161	0.0

WESTERN SYSTEMS COORDINATING COUNCIL
2003 HS3-SA APPROVED BASE CASE

Zone	Zone_name	Loss_mw
10	SANTA CRUZ	9.89

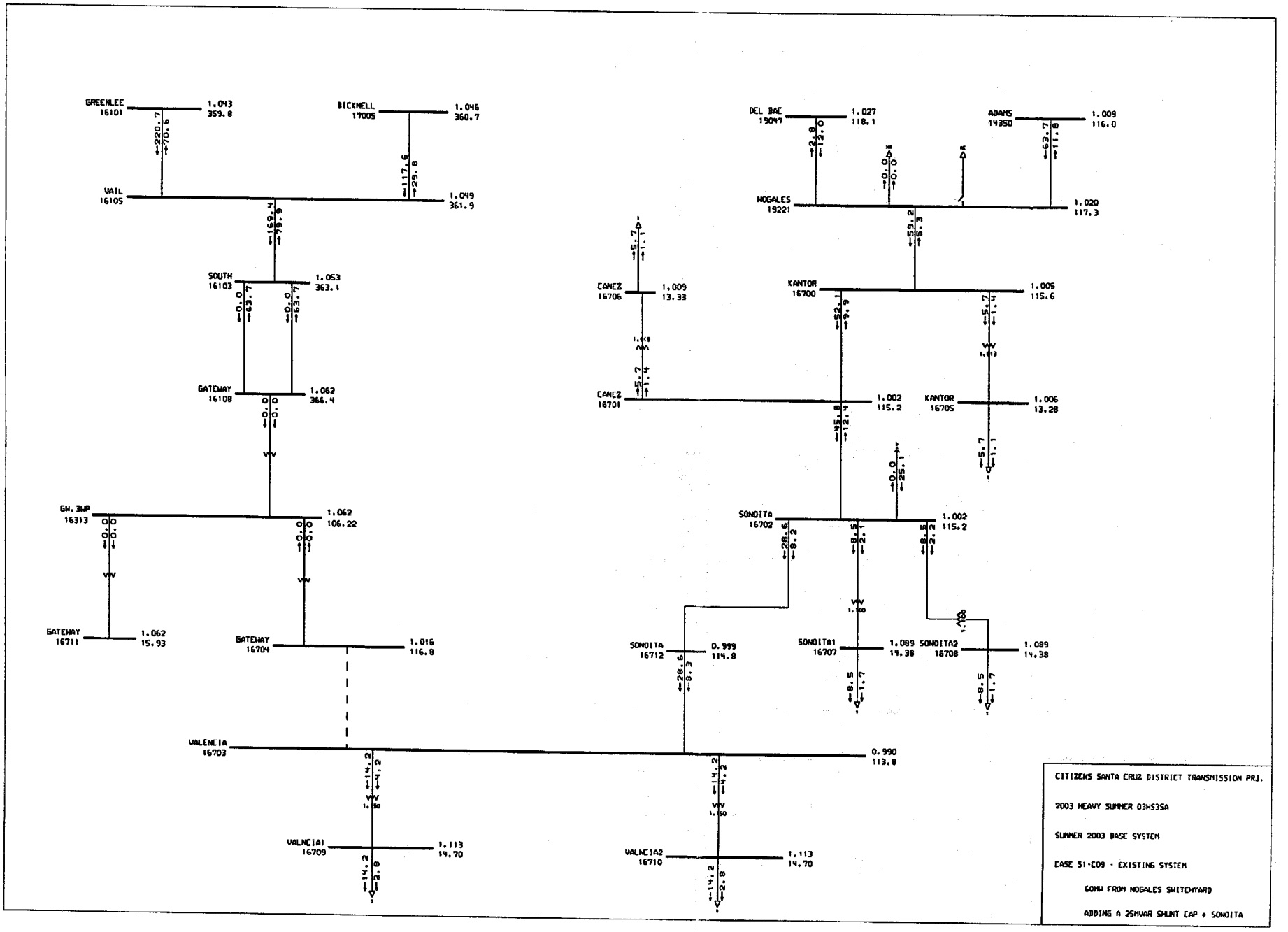
GREENLEE 16101 1.043 359.8
BICKNELL 17005 1.046 360.7
VAIL 16105 1.049 361.9
SOUTH 16103 1.053 363.1
GATEWAY 16108 1.062 366.4
GW.3WP 16313 1.062 106.22
GATEWAY 16711 1.062 15.93
GATEWAY 16704 1.016 116.8
VALENCIA 16703 0.990 113.8
VALNCIA1 16709 1.113 14.70
VALNCIA2 16710 1.113 14.70
DEL BAC 19047 1.027 118.1
ADAMS 14350 1.009 116.0
NOGALES 19221 1.020 117.3
CANEZ 16706 1.009 13.33
CANEZ 16701 1.002 115.2
KANTOR 16700 1.005 115.6
KANTOR 16705 1.006 13.28
SONOITA 16702 1.002 115.2
SONOITA 16712 0.999 114.8
SONOITA1 16707 1.089 14.38
SONOITA2 16708 1.089 14.38
CITIZENS SANTA CRUZ DISTRICT TRANSMISSION PRJ.
2003 HEAVY SUMMER 03HS3SA
SUMMER 2003 BASE SYSTEM
CASE S1-C09 - EXISTING SYSTEM
60MW FROM NOGALES SWITCHYARD
ADDING A 25MVAR SHUNT CAP @ SONOITA

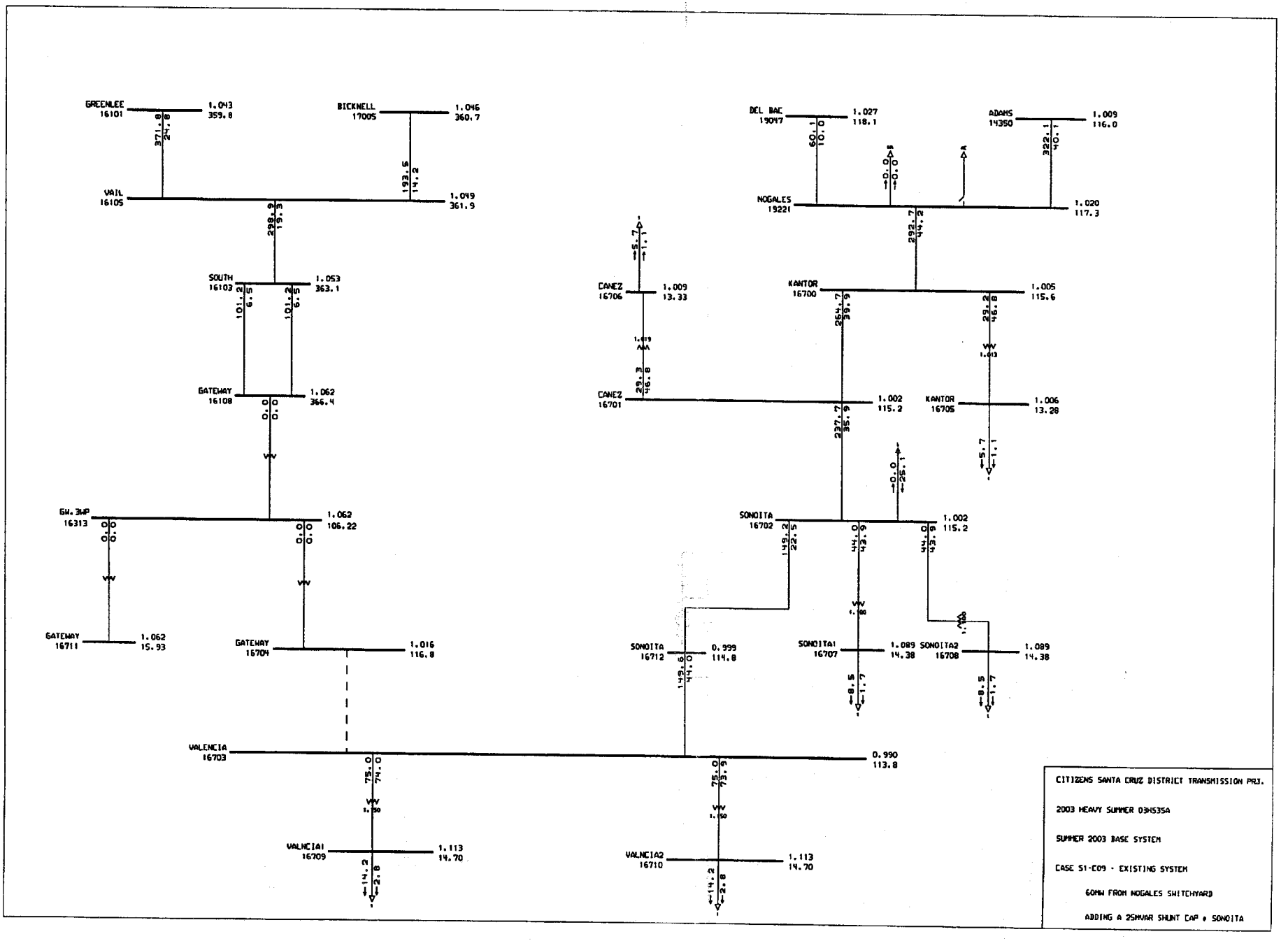
GREENLEE 16101 1.043 359.8
BICKNELL 17005 1.046 360.7
VAIL 16105 1.049 361.9
SOUTH 16103 1.053 363.1
GATEWAY 16108 1.062 366.4
GW.3WP 16313 1.062 106.22
GATEWAY 16711 1.062 15.93
GATEWAY 16704 1.016 116.8
DEL BAC 19047 1.027 118.1
ADAMS 14350 1.009 116.0
NOGALES 19221 1.020 117.3
CANEZ 16706 1.009 13.33
KANTOR 16700 1.005 115.6
CANEZ 16701 1.002 115.2
KANTOR 16705 1.006 13.28
SONOITA 16702 1.002 115.2
SONOITA 16712 0.999 114.8
SONOITA1 16707 1.089 14.38
SONOITA2 16708 1.089 14.38
VALENCIA 16703 0.990 113.8
VALNCIA1 16709 1.113 14.70
VALNCIA2 16710 1.113 14.70
CITIZENS SANTA CRUZ DISTRICT TRANSMISSION PRJ.
2003 HEAVY SUMMER 03HS35A
SUMMER 2003 BASE SYSTEM
CASE S1-C09 - EXISTING SYSTEM
60MW FROM NOGALES SWITCHYARD
ADDING A 25MVAR SHUNT CAP @ SONOITA

WESTERN SYSTEMS COORDINATING COUNCIL
2003 HS3-SA APPROVED BASE CASE

--From-	--NAME--	--KV--	---To--	--NAME--	--KV--	CK	---P---	---Q---	--MVA--	-AMPS--	-%rate-	-rate--	unit	-Af	-At	-Ar	-Zf	-Zt	-Zo	-Plos
16703	VALENCIA	115.00	16709	VALNCIA1	13.20	1	14.2	4.2	14.8	75.0	74.0	20.0	Mva	14	14	14	10	10	10	0.(
16703	VALENCIA	115.00	16710	VALNCIA2	13.20	1	14.2	4.2	14.8	75.0	73.9	20.0	Mva	14	14	14	10	10	10	0.(
16101	GREENLEE	345.00	16104	SPRINGR	345.00	1	-362.8	53.9	366.8	588.5	48.1	1246.7	Amp	14	14	14	10	160	160	6.4
16701	CANEZ	115.00	16706	CANEZ	13.20	1	5.7	1.4	5.9	29.3	46.8	12.5	Mva	14	14	14	10	10	10	-0.(
16700	KANTOR	115.00	16705	KANTOR	13.20	1	5.7	1.4	5.9	29.2	46.8	12.5	Mva	14	14	14	10	10	10	-0.(
16700	KANTOR	115.00	19221	NOGALES	115.00	1	-57.7	8.5	58.4	291.5	44.2	662.7	Amp	14	14	14	10	10	10	1.5
16703	VALENCIA	115.00	16712	SONOITA	115.00	1	-28.4	-8.3	29.6	150.1	44.1	340.0	Amp	14	14	14	10	10	10	0.7
16702	SONOITA	115.00	16708	SONOITA2	13.20	1	8.5	2.2	8.8	44.0	43.9	20.0	Mva	14	14	14	10	10	10	0.(
16702	SONOITA	115.00	16707	SONOITA1	13.20	1	8.5	2.1	8.8	44.0	43.9	20.0	Mva	14	14	14	10	10	10	-0.(
14350	ADAMS	115.00	19221	NOGALES	115.00	1	63.7	-11.8	64.7	322.1	40.1	803.3	Amp	14	14	14	10	10	140	1.5
16700	KANTOR	115.00	16701	CANEZ	115.00	1	52.1	-9.9	53.0	264.7	39.9	662.7	Amp	14	14	14	10	10	10	0.6
16103	SOUTH	345.00	16306	SO.3WP2	100.00	1	242.3	28.6	244.0	387.9	36.4	672.0	Mva	14	14	14	10	160	160	0.7
16701	CANEZ	115.00	16702	SONOITA	115.00	1	45.8	-12.4	47.4	237.7	35.9	662.7	Amp	14	14	14	10	10	10	0.7
16105	VAIL	345.00	16308	VAIL.3WP	100.00	1	166.2	82.7	185.6	296.2	27.9	672.0	Mva	14	14	14	10	160	160	0.(
16101	GREENLEE	345.00	16105	VAIL	345.00	1	220.7	-70.6	231.7	371.8	24.8	1499.4	Amp	14	14	14	10	10	160	2.6
16702	SONOITA	115.00	16712	SONOITA	115.00	1	28.6	8.2	29.8	149.2	22.6	662.7	Amp	14	14	14	10	10	10	0.(
16103	SOUTH	345.00	16107	WESTWING	345.00	1	-73.1	30.4	79.2	125.9	20.7	1124.6	Amp	14	14	14	10	160	160	0.5
16103	SOUTH	345.00	16105	VAIL	345.00	1	-169.2	68.4	182.5	290.2	19.3	1548.0	Amp	14	14	14	10	10	160	0.1
16105	VAIL	345.00	17005	BICKNELL	345.00	1	-117.6	29.8	121.3	193.5	15.0	1365.1	Amp	14	14	14	10	10	170	0.1
19047	DEL BAC	115.00	19221	NOGALES	115.00	1	-2.8	12.0	12.3	60.1	10.7	602.5	Amp	14	14	14	10	10	140	0.(
16101	GREENLEE	345.00	17010	GREEN-AE	345.00	1	-87.4	20.9	89.9	144.2	10.6	1365.1	Amp	14	14	14	10	170	170	0.(
19047	DEL BAC	115.00	19064	TUCSON	115.00	1	-1.4	-9.0	9.1	44.7	7.4	602.5	Amp	14	14	14	10	191	191	0.(
16103	SOUTH	345.00	16108	GATEWAY	345.00	1	0.0	-63.7	63.7	101.2	6.5	1548.0	Amp	14	14	4	10	10	160	0.(
16103	SOUTH	345.00	16108	GATEWAY	345.00	2	0.0	-63.7	63.7	101.2	6.5	1548.0	Amp	14	14	4	10	10	160	0.(
19047	DEL BAC	115.00	19201	BLACKMTN	115.00	1	4.3	-2.9	5.2	25.4	4.2	602.5	Amp	14	14	14	10	140	140	0.(
16313	GW.3WP	100.00	16704	GATEWAY	115.00	1	-0.0	-0.0	0.0	0.0	0.0	100.0	Mva	14	14	14	10	10	161	-0.(
16108	GATEWAY	345.00	16313	GW.3WP	100.00	1	0.0	0.0	0.0	0.0	0.0	100.0	Mva	14	14	14	10	10	161	-0.(
14350	ADAMS	115.00	17001	APACHE	115.00	1	-95.1	2.4	95.1	473.1	0.0	0.0	Amp	14	14	14	10	170	191	1.3
16313	GW.3WP	100.00	16711	GATEWAY	15.00	1	0.0	0.0	0.0	0.0	0.0	100.0	Mva	14	14	14	10	10	161	0.(

WESTERN SYSTEMS COORDINATING COUNCIL
2003 HS3-SA APPROVED BASE CASE

Zone	Zone_name	Loss_mw
10	SANTA	8.43

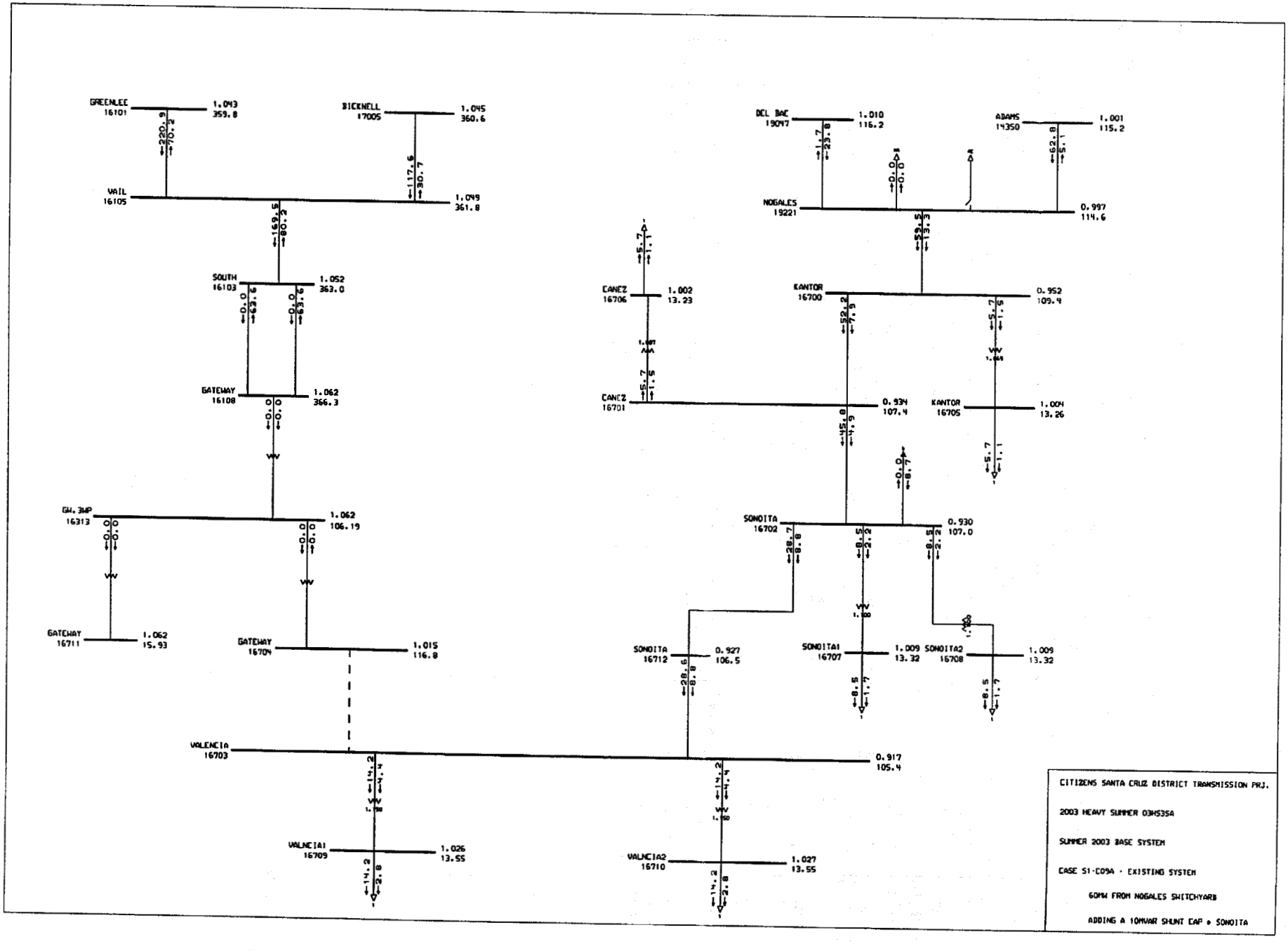
GREENLEE 16101 1.043 359.8
BICKNELL 17005 1.045 360.6
VAIL 16105 1.049 361.8
SOUTH 16103 1.052 363.0
GATEWAY 16108 1.062 366.3
GW.3WP 16313 1.062 106.19
GATEWAY 16711 1.062 15.93
GATEWAY 16704 1.015 116.8
VALENCIA 16703 0.917 105.4
VALNCIA1 16709 1.026 13.55
VALNCIA2 16710 1.027 13.55
DCL BAC 19047 1.010 116.2
ADAMS 14350 1.001 115.2
NOGALES 19221 0.997 114.6
CANEZ 16706 1.002 13.23
KANTOR 16700 0.952 109.4
CANEZ 16701 0.934 107.4
KANTOR 16705 1.004 13.26
SONOITA 16702 0.930 107.0
SONOITA 16712 0.927 106.5
SONOITA1 16707 1.009 13.32
SONOITA2 16708 1.009 13.32
CITIZENS SANTA CRUZ DISTRICT TRANSMISSION PRJ.
2003 HEAVY SUMMER 03HS3SA
SUMMER 2003 BASE SYSTEM
CASE S1-C09A - EXISTING SYSTEM
60MW FROM NOGALES SWITCHYARD
ADDING A 10MVAR SHUNT CAP @ SONOITA

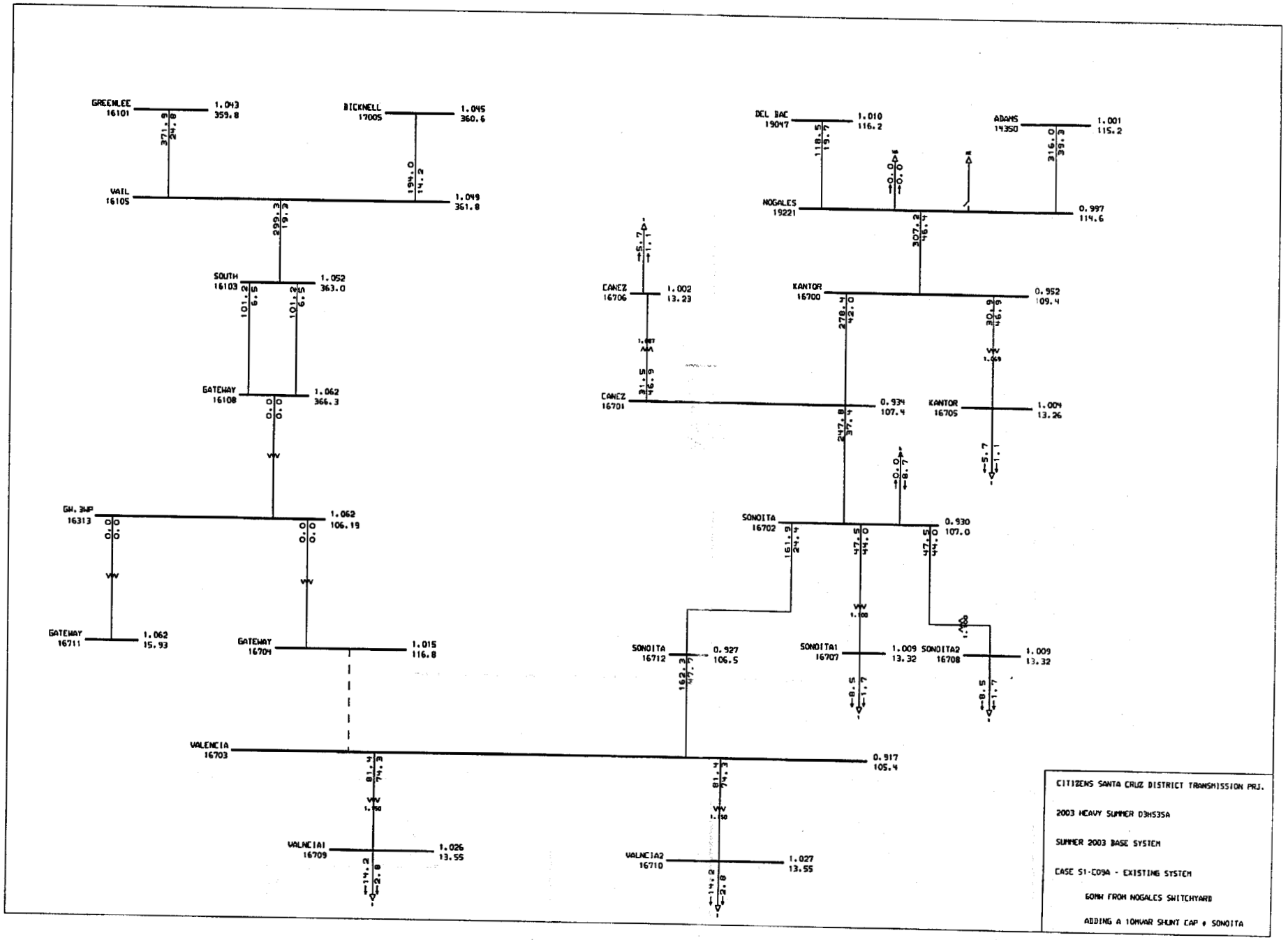
GREENLEE 16101 1.043 359.8
BICKNELL 17005 1.045 360.6
VAIL 16105 1.049 361.8
SOUTH 16103 1.052 363.0
GATEWAY 16108 1.062 366.3
GW. 3WP 16313 1.062 106.19
GATEWAY 16711 1.062 15.93
GATEWAY 16704 1.015 116.8
VALENCIA 16703 0.917 105.4
VALNCIA1 16709 1.026 13.55
VALNCIA2 16710 1.027 13.55
DEL BAC 19047 1.010 116.2
ADAMS 14350 1.001 115.2
NOGALES 19221 0.997 114.6
CANEZ 16706 1.002 13.23
KANTOR 16700 0.952 109.4
CANEZ 16701 0.934 107.4
KANTOR 16705 1.004 13.26
SONOITA 16702 0.930 107.0
SONOITA 16712 0.927 106.5
SONOITA1 16707 1.009 13.32
SONOITA2 16708 1.009 13.32
CITIZENS SANTA CRUZ DISTRICT TRANSMISSION PRJ.
2003 HEAVY SUMMER D3HS3SA
SUMMER 2003 BASE SYSTEM
CASE S1-C09A - EXISTING SYSTEM
60MW FROM NOGALES SWITCHYARD
ADDING A 10MVAR SHUNT CAP @ SONOITA

WESTERN SYSTEMS COORDINATING COUNCIL
2003 HS3-SA APPROVED BASE CASE

--From-	--NAME--	--KV--	---To--	--NAME--	--KV--	CK	---P---	---Q---	--MVA--	-AMPS--	-%rate-	-rate--	unit	-Af	-At	-Ar	-Zf	-Zt	-Zo	-Ploss
16703	VALENCIA	115.00	16709	VALNCIA1	13.20	1	14.2	4.4	14.9	81.4	74.3	20.0	Mva	14	14	14	10	10	10	-0.0
16703	VALENCIA	115.00	16710	VALNCIA2	13.20	1	14.2	4.4	14.9	81.4	74.3	20.0	Mva	14	14	14	10	10	10	-0.0
16101	GREENLEE	345.00	16104	SPRINGR	345.00	1	-362.7	53.7	366.6	588.3	48.1	1246.7	Amp	14	14	14	10	160	160	6.4
16703	VALENCIA	115.00	16712	SONOITA	115.00	1	-28.4	-8.8	29.7	162.8	47.9	340.0	Amp	14	14	14	10	10	10	0.2
16701	CANEZ	115.00	16706	CANEZ	13.20	1	5.7	1.5	5.9	31.5	46.9	12.5	Mva	14	14	14	10	10	10	-0.0
16700	KANTOR	115.00	16705	KANTOR	13.20	1	5.7	1.5	5.9	30.9	46.9	12.5	Mva	14	14	14	10	10	10	-0.0
16700	KANTOR	115.00	19221	NOGALES	115.00	1	-57.9	-9.3	58.6	309.2	46.7	662.7	Amp	14	14	14	10	10	10	1.6
16702	SONOITA	115.00	16708	SONOITA2	13.20	1	8.5	2.2	8.8	47.5	44.0	20.0	Mva	14	14	14	10	10	10	-0.0
16702	SONOITA	115.00	16707	SONOITA1	13.20	1	8.5	2.2	8.8	47.5	44.0	20.0	Mva	14	14	14	10	10	10	-0.0
16700	KANTOR	115.00	16701	CANEZ	115.00	1	52.2	7.9	52.8	278.4	42.1	662.7	Amp	14	14	14	10	10	10	0.6
14350	ADAMS	115.00	19221	NOGALES	115.00	1	62.8	-5.1	63.0	316.0	39.3	803.3	Amp	14	14	14	10	10	140	1.5
16701	CANEZ	115.00	16702	SONOITA	115.00	1	45.8	4.9	46.1	247.8	37.4	662.7	Amp	14	14	14	10	10	10	0.1
16103	SOUTH	345.00	16306	SO.3WP2	100.00	1	242.3	28.5	244.0	388.1	36.4	672.0	Mva	14	14	14	10	160	160	0.1
16105	VAIL	345.00	16308	VAIL.3WP	100.00	1	166.4	82.4	185.6	296.3	27.8	672.0	Mva	14	14	14	10	160	160	0.0
16101	GREENLEE	345.00	16105	VAIL	345.00	1	220.9	-70.2	231.8	371.9	24.8	1499.4	Amp	14	14	14	10	10	160	2.6
16702	SONOITA	115.00	16712	SONOITA	115.00	1	28.7	8.8	30.0	161.9	24.5	662.7	Amp	14	14	14	10	10	10	0.0
16103	SOUTH	345.00	16107	WESTWING	345.00	1	-73.1	30.1	79.0	125.7	20.7	1124.6	Amp	14	14	14	10	160	160	0.5
19047	DEL BAC	115.00	19221	NOGALES	115.00	1	-1.7	23.8	23.9	118.5	20.4	602.5	Amp	14	14	14	10	10	140	0.0
16103	SOUTH	345.00	16105	VAIL	345.00	1	-169.3	68.7	182.7	290.6	19.3	1548.0	Amp	14	14	14	10	10	160	0.2
16105	VAIL	345.00	17005	BICKNELL	345.00	1	-117.6	30.7	121.6	194.0	15.0	1365.1	Amp	14	14	14	10	10	170	0.1
19047	DEL BAC	115.00	19064	TUCSON	115.00	1	-2.3	-16.9	17.1	84.9	14.1	602.5	Amp	14	14	14	10	191	191	0.0
16101	GREENLEE	345.00	17010	GREEN-AE	345.00	1	-87.8	20.9	90.2	144.8	10.7	1365.1	Amp	14	14	14	10	170	170	0.0
19047	DEL BAC	115.00	19201	BLACKMTN	115.00	1	4.0	-6.9	7.9	39.4	6.5	602.5	Amp	14	14	14	10	140	140	0.0
16103	SOUTH	345.00	16108	GATEWAY	345.00	1	0.0	-63.6	63.6	101.2	6.5	1548.0	Amp	14	14	4	10	10	160	0.0
16103	SOUTH	345.00	16108	GATEWAY	345.00	2	0.0	-63.6	63.6	101.2	6.5	1548.0	Amp	14	14	4	10	10	160	0.0
16313	GW.3WP	100.00	16704	GATEWAY	115.00	1	0.0	-0.0	0.0	0.0	0.0	100.0	Mva	14	14	14	10	10	161	0.0
16108	GATEWAY	345.00	16313	GW.3WP	100.00	1	0.0	0.0	0.0	0.0	0.0	100.0	Mva	14	14	14	10	10	161	0.0
14350	ADAMS	115.00	17001	APACHE	115.00	1	-94.2	-4.3	94.3	472.9	0.0	0.0	Amp	14	14	14	10	170	191	1.3
16313	GW.3WP	100.00	16711	GATEWAY	15.00	1	0.0	0.0	0.0	0.0	0.0	100.0	Mva	14	14	14	10	10	161	0.0

WESTERN SYSTEMS COORDINATING COUNCIL
2003 HS3-SA APPROVED BASE CASE

Zone	Zone_name	Loss_mw
10	SANTA CRUZ	8.72

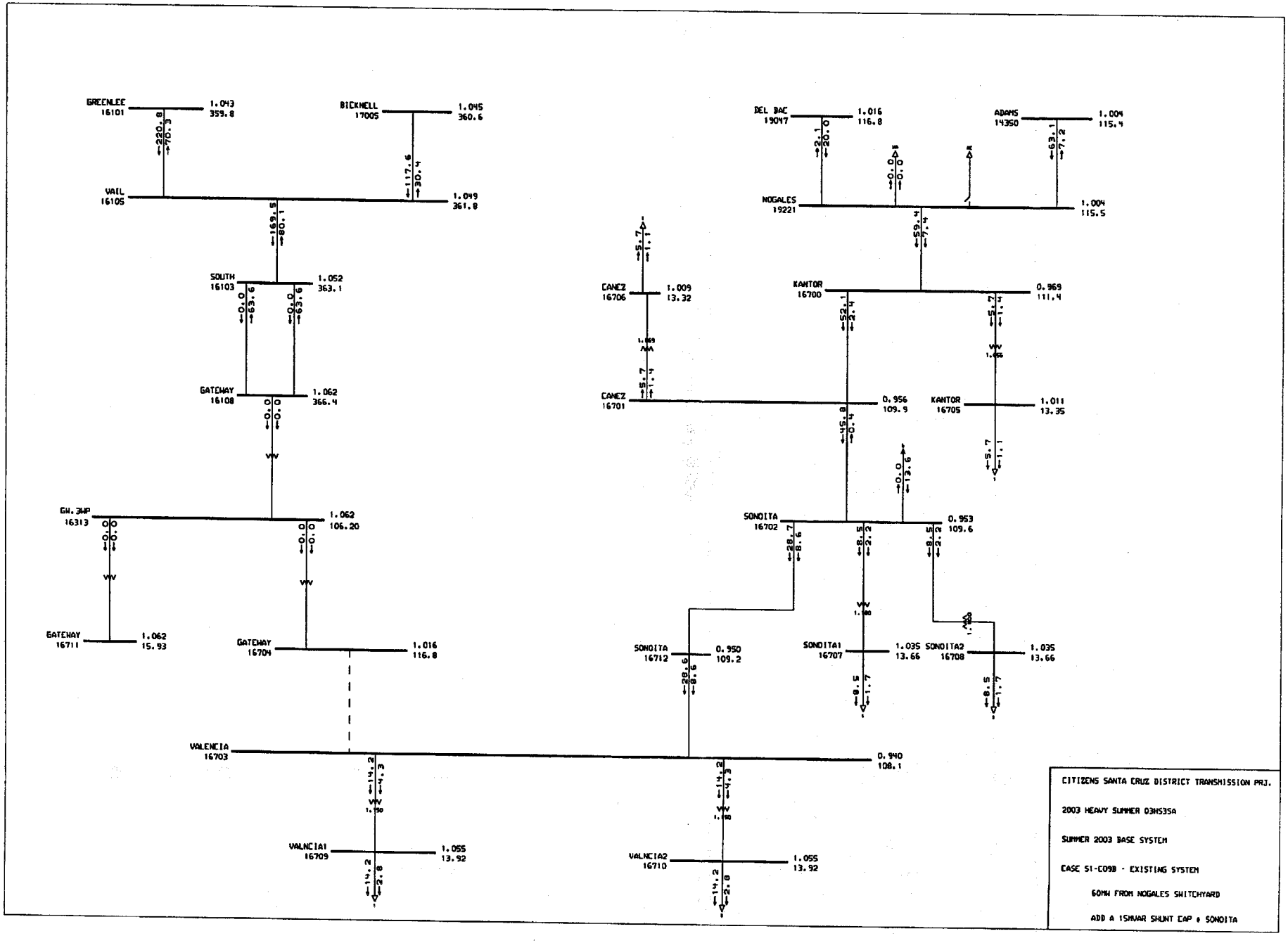
GREENLEE 16101 1.043 359.8
BICKNELL 17005 1.045 360.6
VAIL 16105 1.049 361.8
SOUTH 16103 1.052 363.1
GATEWAY 16108 1.062 366.4
GW.3WP 16313 1.062 106.20
GATEWAY 16711 1.062 15.93
GATEWAY 16704 1.016 116.8
VALENCIA 16703 0.940 108.1
VALNCIA1 16709 1.055 13.92
VALNCIA2 16710 1.055 13.92
DEL BAC 19047 1.016 116.8
ADAMS 14350 1.004 115.4
NOGALES 19221 1.004 115.5
CANEZ 16706 1.009 13.32
KANTOR 16700 0.969 111.4
CANEZ 16701 0.956 109.9
KANTOR 16705 1.011 13.35
SONOITA 16702 0.953 109.6
SONOITA 16712 0.950 109.2
SONOITA1 16707 1.035 13.66
SONOITA2 16708 1.035 13.66
CITIZENS SANTA CRUZ DISTRICT TRANSMISSION PRJ.
2003 HEAVY SUMMER 03HS3SA
SUMMER 2003 BASE SYSTEM
CASE S1-C09B - EXISTING SYSTEM
60MW FROM NOGALES SWITCHYARD
ADD A 15MVAR SHUNT CAP @ SONOITA

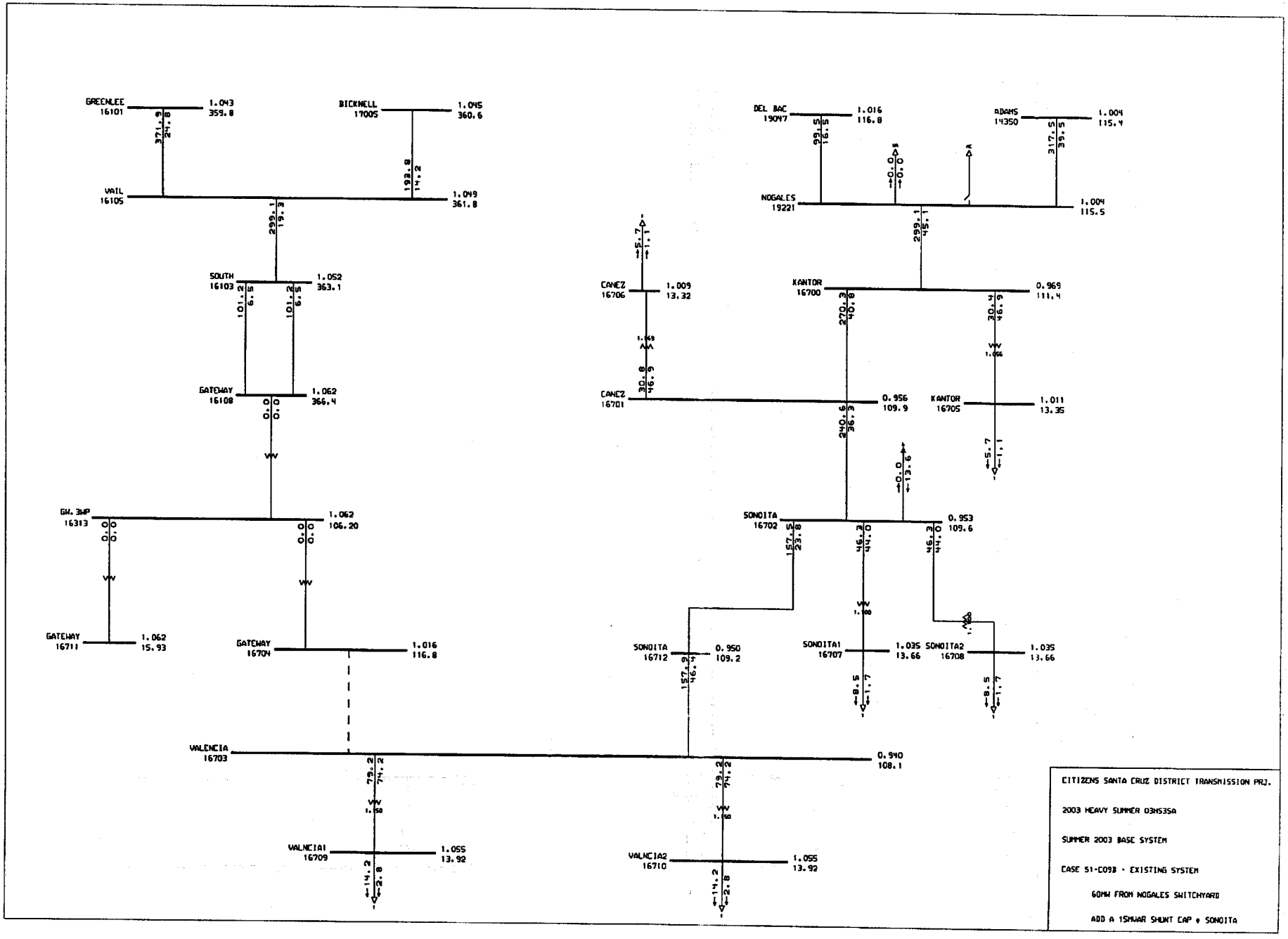
GREENLEE 16101 1.043 359.8
BICKNELL 17005 1.045 360.6
VAIL 16105 1.049 361.8
SOUTH 16103 1.052 363.1
GATEWAY 16108 1.062 366.4
GW.3MP 16313 1.062 106.20
GATEWAY 16711 1.062 15.93
GATEWAY 16704 1.016 116.8
VALENCIA 16703 0.940 108.1
VALNCIA1 16709 1.055 13.92
VALNCIA2 16710 1.055 13.92
DEL BAC 19047 1.016 116.8
ADAMS 14350 1.004 115.4
NOGALES 19221 1.004 115.5
CANEZ 16706 1.009 13.32
KANTOR 16700 0.969 111.4
CANEZ 16701 0.956 109.9
KANTOR 16705 1.011 13.35
SONOITA 16702 0.953 109.6
SONOITA 16712 0.950 109.2
SONOITA1 16707 1.035 13.66
SONOITA2 16708 1.035 13.66
CITIZENS SANTA CRUZ DISTRICT TRANSMISSION PRJ.
2003 HEAVY SUMMER 03HS3SA
SUMMER 2003 BASE SYSTEM
CASE 51-C093 + EXISTING SYSTEM
60MW FROM NOGALES SWITCHYARD
ADD A 15MVAR SHUNT CAP @ SONOITA

WESTERN SYSTEMS COORDINATING COUNCIL
2003 HS3-SA APPROVED BASE CASE

--From-	--NAME--	--KV--	---To--	--NAME--	--KV--	CK	---P---	---Q---	--MVA--	-AMPS--	-%rate-	-rate--	unit	-Af	-At	-Ar	-Zf	-Zt	-Zo	-Plos
16703	VALENCIA	115.00	16709	VALNCIA1	13.20	1	14.2	4.3	14.8	79.2	74.2	20.0	Mva	14	14	14	10	10	10	-0.
16703	VALENCIA	115.00	16710	VALNCIA2	13.20	1	14.2	4.3	14.8	79.2	74.2	20.0	Mva	14	14	14	10	10	10	0.
16101	GREENLEE	345.00	16104	SPRINGR	345.00	1	-362.7	53.8	366.7	588.3	48.1	1246.7	Amp	14	14	14	10	160	160	6.
16701	CANEZ	115.00	16706	CANEZ	13.20	1	5.7	1.4	5.9	30.8	46.9	12.5	Mva	14	14	14	10	10	10	-0.
16700	KANTOR	115.00	16705	KANTOR	13.20	1	5.7	1.4	5.9	30.4	46.9	12.5	Mva	14	14	14	10	10	10	-0.
16703	VALENCIA	115.00	16712	SONOITA	115.00	1	-28.4	-8.6	29.7	158.4	46.6	340.0	Amp	14	14	14	10	10	10	0.
16700	KANTOR	115.00	19221	NOGALES	115.00	1	-57.8	-3.8	57.9	300.1	45.3	662.7	Amp	14	14	14	10	10	10	1.
16702	SONOITA	115.00	16708	SONOITA2	13.20	1	8.5	2.2	8.8	46.3	44.0	20.0	Mva	14	14	14	10	10	10	0.
16702	SONOITA	115.00	16707	SONOITA1	13.20	1	8.5	2.2	8.8	46.3	44.0	20.0	Mva	14	14	14	10	10	10	-0.
16700	KANTOR	115.00	16701	CANEZ	115.00	1	52.1	2.4	52.2	270.3	40.8	662.7	Amp	14	14	14	10	10	10	0.
14350	ADAMS	115.00	19221	NOGALES	115.00	1	63.1	-7.2	63.5	317.5	39.5	803.3	Amp	14	14	14	10	10	140	1.
16103	SOUTH	345.00	16306	SO.3WP2	100.00	1	242.3	28.5	244.0	388.0	36.4	672.0	Mva	14	14	14	10	160	160	0.
16701	CANEZ	115.00	16702	SONOITA	115.00	1	45.8	-0.4	45.8	240.6	36.3	662.7	Amp	14	14	14	10	10	10	0.
16105	VAIL	345.00	16308	VAIL.3WP	100.00	1	166.3	82.5	185.6	296.2	27.9	672.0	Mva	14	14	14	10	160	160	0.
16101	GREENLEE	345.00	16105	VAIL	345.00	1	220.8	-70.3	231.8	371.9	24.8	1499.4	Amp	14	14	14	10	10	160	2.
16702	SONOITA	115.00	16712	SONOITA	115.00	1	28.7	8.6	29.9	157.5	23.8	662.7	Amp	14	14	14	10	10	10	0.
16103	SOUTH	345.00	16107	WESTWING	345.00	1	-73.1	30.2	79.1	125.7	20.7	1124.6	Amp	14	14	14	10	160	160	0.
16103	SOUTH	345.00	16105	VAIL	345.00	1	-169.3	68.6	182.7	290.5	19.3	1548.0	Amp	14	14	14	10	10	160	0.
19047	DEL BAC	115.00	19221	NOGALES	115.00	1	-2.1	20.0	20.1	99.5	17.2	602.5	Amp	14	14	14	10	10	140	0.
16105	VAIL	345.00	17005	BICKNELL	345.00	1	-117.6	30.4	121.5	193.9	15.0	1365.1	Amp	14	14	14	10	10	170	0.
19047	DEL BAC	115.00	19064	TUCSON	115.00	1	-2.0	-14.4	14.5	71.9	11.9	602.5	Amp	14	14	14	10	191	191	0.
16101	GREENLEE	345.00	17010	GREEN-AE	345.00	1	-87.7	20.9	90.1	144.6	10.6	1365.1	Amp	14	14	14	10	170	170	0.
16103	SOUTH	345.00	16108	GATEWAY	345.00	1	0.0	-63.6	63.6	101.2	6.5	1548.0	Amp	14	14	4	10	10	160	0.
16103	SOUTH	345.00	16108	GATEWAY	345.00	2	0.0	-63.6	63.6	101.2	6.5	1548.0	Amp	14	14	4	10	10	160	0.
19047	DEL BAC	115.00	19201	BLACKMTN	115.00	1	4.1	-5.6	6.9	34.4	5.7	602.5	Amp	14	14	14	10	140	140	0.
16313	GW.3WP	100.00	16704	GATEWAY	115.00	1	0.0	0.0	0.0	0.0	0.0	100.0	Mva	14	14	14	10	10	161	0.
16108	GATEWAY	345.00	16313	GW.3WP	100.00	1	0.0	0.0	0.0	0.0	0.0	100.0	Mva	14	14	14	10	10	161	-0.
14350	ADAMS	115.00	17001	APACHE	115.00	1	-94.5	-2.2	94.5	472.6	0.0	0.0	Amp	14	14	14	10	170	191	1.
16313	GW.3WP	100.00	16711	GATEWAY	15.00	1	0.0	0.0	0.0	0.0	0.0	100.0	Mva	14	14	14	10	10	161	0.

WESTERN SYSTEMS COORDINATING COUNCIL
2003 HS3-SA APPROVED BASE CASE

Zone	Zone_name	Loss_mw
10	SANTA CRUZ	8.56

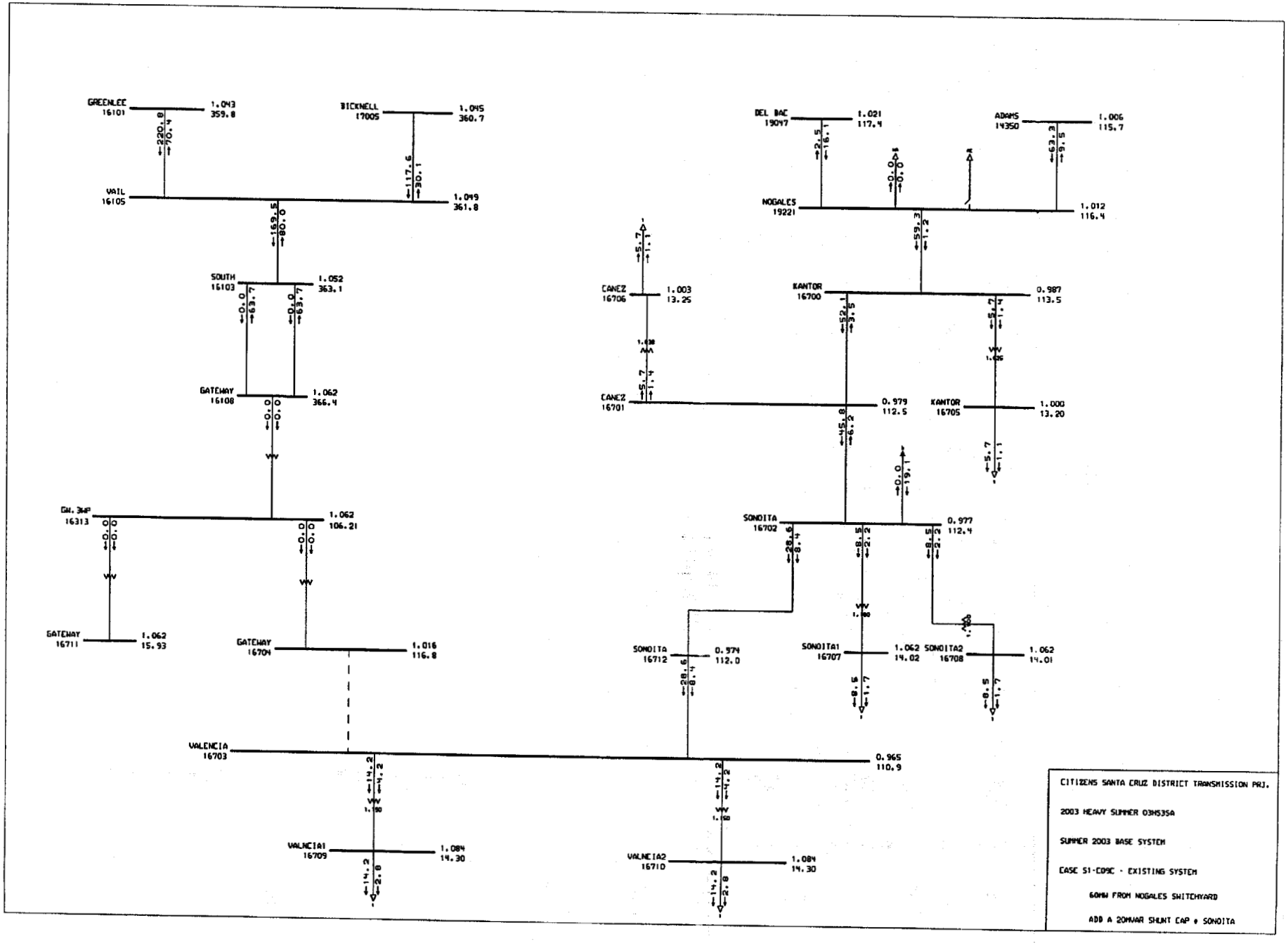
GREENLEE 16101 1.043 359.8
BICKNELL 17005 1.045 360.7
VAIL 16105 1.049 361.8
SOUTH 16103 1.052 363.1
GATEWAY 16108 1.062 366.4
GW.34P 16313 1.062 106.21
GATEWAY 16711 1.062 15.93
GATEWAY 16704 1.016 116.8
DEL BAC 19047 1.021 117.4
ADAMS 14350 1.006 115.7
NOGALES 19221 1.012 116.4
CANEZ 16706 1.003 13.25
KANTOR 16700 0.987 113.5
CANEZ 16701 0.979 112.5
KANTOR 16705 1.000 13.20
SONOITA 16702 0.977 112.4
SONOITA 16712 0.974 112.0
SONOITA1 16707 1.062 14.02
SONOITA2 16708 1.062 14.01
VALENCIA 16703 0.965 110.9
VALNCIA1 16709 1.084 14.30
VALNCIA2 16710 1.084 14.30
CITIZENS SANTA CRUZ DISTRICT TRANSMISSION PRJ.
2003 HEAVY SUMMER 03HS35A
SUMMER 2003 BASE SYSTEM
CASE S1-CD9C - EXISTING SYSTEM
60MW FROM NOGALES SWITCHYARD
ADD A 20MVAR SHUNT CAP @ SONOITA

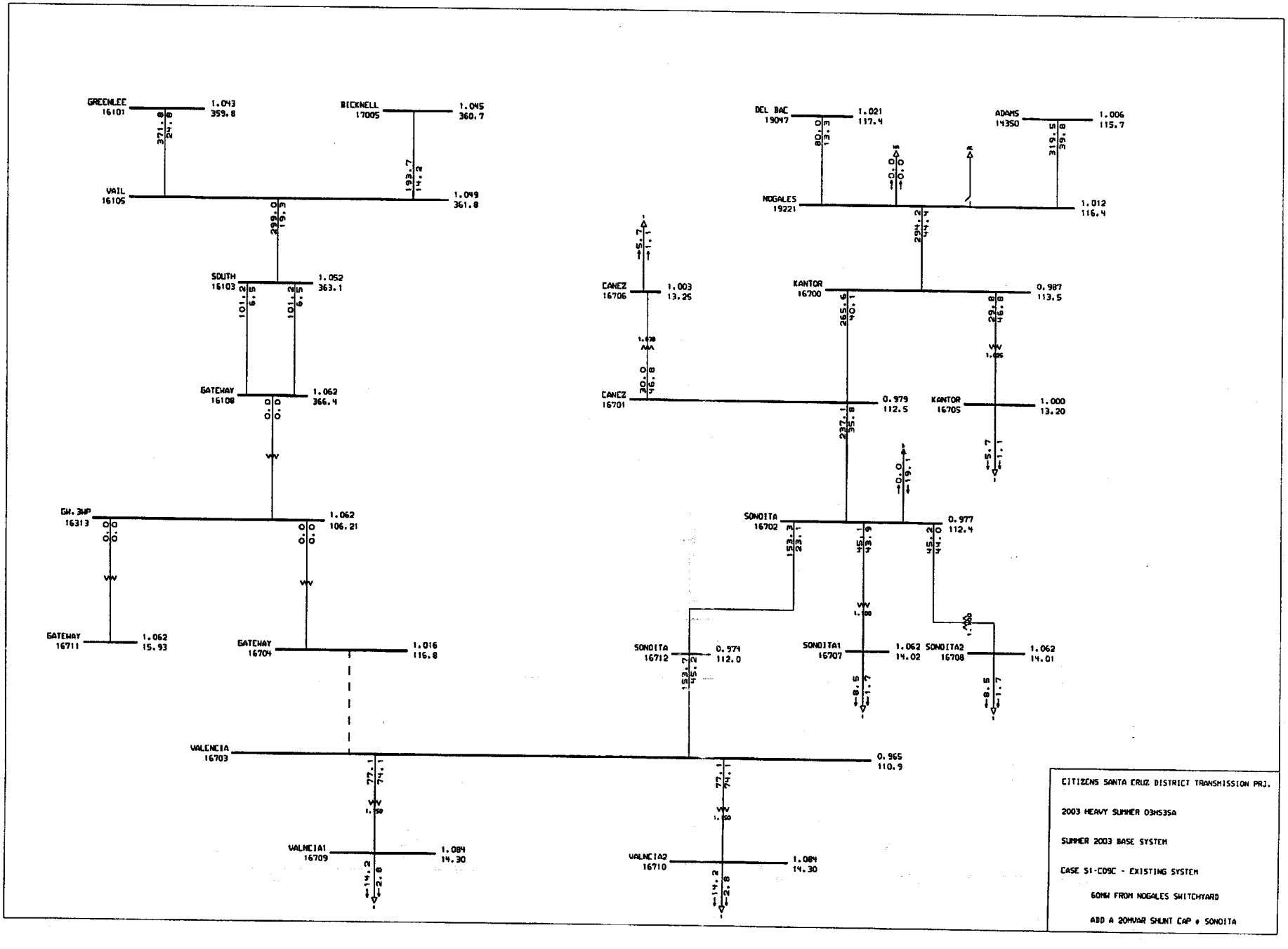
GREENLEE 16101 1.043 359.8
BICKNELL 17005 1.045 360.7
VAIL 16105 1.049 361.8
SOUTH 16103 1.052 363.1
GATEWAY 16108 1.062 366.4
GW.3WP 16313 1.062 106.21
GATEWAY 16711 1.062 15.93
GATEWAY 16704 1.016 116.8
VALENCIA 16703 0.965 110.9
VALNCIA1 16709 1.084 14.30
VALNCIA2 16710 1.084 14.30
DEL BAC 19047 1.021 117.4
ADAMS 14350 1.006 115.7
NOGALES 19221 1.012 116.4
CANEZ 16706 1.003 13.25
KANTOR 16700 0.987 113.5
CANEZ 16701 0.979 112.5
KANTOR 16705 1.000 13.20
SONOITA 16702 0.977 112.4
SONOITA 16712 0.974 112.0
SONOITA1 16707 1.062 14.02
SONOITA2 16708 1.062 14.01
CITIZENS SANTA CRUZ DISTRICT TRANSMISSION PRJ.
2003 HEAVY SUMMER 03HS3SA
SUMMER 2003 BASE SYSTEM
CASE S1-C09C - EXISTING SYSTEM
60MW FROM NOGALES SWITCHYARD
ADD A 20MVAR SHUNT CAP @ SONOITA

WESTERN SYSTEMS COORDINATING COUNCIL
2003 HS3-SA APPROVED BASE CASE

--From-	--NAME--	--KV--	---To--	--NAME--	--KV--	CK	---P---	---Q---	--MVA--	-AMPS--	-%rate-	-rate--	unit	-Af	-At	-Ar	-Zf	-Zt	-Zo	-Plos
16703	VALENCIA	115.00	16709	VALNCIA1	13.20	1	14.2	4.2	14.8	77.1	74.1	20.0	Mva	14	14	14	10	10	10	-0.0
16703	VALENCIA	115.00	16710	VALNCIA2	13.20	1	14.2	4.2	14.8	77.1	74.1	20.0	Mva	14	14	14	10	10	10	-0.0
16101	GREENLEE	345.00	16104	SPRINGR	345.00	1	-362.7	53.8	366.7	588.4	48.1	1246.7	Amp	14	14	14	10	160	160	6.4
16701	CANEZ	115.00	16706	CANEZ	13.20	1	5.7	1.4	5.9	30.0	46.8	12.5	Mva	14	14	14	10	10	10	-0.0
16700	KANTOR	115.00	16705	KANTOR	13.20	1	5.7	1.4	5.9	29.8	46.8	12.5	Mva	14	14	14	10	10	10	0.0
16703	VALENCIA	115.00	16712	SONOITA	115.00	1	-28.4	-8.5	29.6	154.2	45.3	340.0	Amp	14	14	14	10	10	10	0.2
16700	KANTOR	115.00	19221	NOGALES	115.00	1	-57.8	2.1	57.8	294.1	44.4	662.7	Amp	14	14	14	10	10	10	1.5
16702	SONOITA	115.00	16708	SONOITA2	13.20	1	8.5	2.2	8.8	45.2	44.0	20.0	Mva	14	14	14	10	10	10	-0.0
16702	SONOITA	115.00	16707	SONOITA1	13.20	1	8.5	2.2	8.8	45.2	43.9	20.0	Mva	14	14	14	10	10	10	0.0
16700	KANTOR	115.00	16701	CANEZ	115.00	1	52.1	-3.5	52.2	265.6	40.1	662.7	Amp	14	14	14	10	10	10	0.6
14350	ADAMS	115.00	19221	NOGALES	115.00	1	63.3	-9.5	64.1	319.5	39.8	803.3	Amp	14	14	14	10	10	140	1.5
16103	SOUTH	345.00	16306	SO.3WP2	100.00	1	242.3	28.6	244.0	387.9	36.4	672.0	Mva	14	14	14	10	160	160	0.1
16701	CANEZ	115.00	16702	SONOITA	115.00	1	45.8	-6.2	46.2	237.1	35.8	662.7	Amp	14	14	14	10	10	10	0.1
16105	VAIL	345.00	16308	VAIL.3WP	100.00	1	166.3	82.6	185.6	296.2	27.9	672.0	Mva	14	14	14	10	160	160	0.0
16101	GREENLEE	345.00	16105	VAIL	345.00	1	220.8	-70.4	231.7	371.8	24.8	1499.4	Amp	14	14	14	10	10	160	2.6
16702	SONOITA	115.00	16712	SONOITA	115.00	1	28.6	8.4	29.8	153.3	23.2	662.7	Amp	14	14	14	10	10	10	0.0
16103	SOUTH	345.00	16107	WESTWING	345.00	1	-73.1	30.3	79.1	125.8	20.7	1124.6	Amp	14	14	14	10	160	160	0.5
16103	SOUTH	345.00	16105	VAIL	345.00	1	-169.3	68.5	182.6	290.3	19.3	1548.0	Amp	14	14	14	10	10	160	0.2
16105	VAIL	345.00	17005	BICKNELL	345.00	1	-117.6	30.1	121.4	193.7	15.0	1365.1	Amp	14	14	14	10	10	170	0.1
19047	DEL BAC	115.00	19221	NOGALES	115.00	1	-2.5	16.1	16.3	80.0	14.0	602.5	Amp	14	14	14	10	10	140	0.0
16101	GREENLEE	345.00	17010	GREEN-AE	345.00	1	-87.6	20.9	90.0	144.4	10.6	1365.1	Amp	14	14	14	10	170	170	0.0
19047	DEL BAC	115.00	19064	TUCSON	115.00	1	-1.7	-11.8	11.9	58.5	9.7	602.5	Amp	14	14	14	10	191	191	0.0
16103	SOUTH	345.00	16108	GATEWAY	345.00	1	0.0	-63.7	63.7	101.2	6.5	1548.0	Amp	14	14	4	10	10	160	0.0
16103	SOUTH	345.00	16108	GATEWAY	345.00	2	0.0	-63.7	63.7	101.2	6.5	1548.0	Amp	14	14	4	10	10	160	0.0
19047	DEL BAC	115.00	19201	BLACKMTN	115.00	1	4.2	-4.3	6.0	29.6	4.9	602.5	Amp	14	14	14	10	140	140	0.0
16313	GW.3WP	100.00	16704	GATEWAY	115.00	1	0.0	0.0	0.0	0.0	0.0	100.0	Mva	14	14	14	10	10	161	0.0
16108	GATEWAY	345.00	16313	GW.3WP	100.00	1	0.0	0.0	0.0	0.0	0.0	100.0	Mva	14	14	14	10	10	161	0.0
14350	ADAMS	115.00	17001	APACHE	115.00	1	-94.7	0.1	94.7	472.6	0.0	0.0	Amp	14	14	14	10	170	191	1.3
16313	GW.3WP	100.00	16711	GATEWAY	15.00	1	0.0	0.0	0.0	0.0	0.0	100.0	Mva	14	14	14	10	10	161	0.0

WESTERN SYSTEMS COORDINATING COUNCIL
2003 HS3-SA APPROVED BASE CASE

Zone	Zone_name	Loss_mw
10	SANTA CRUZ	8.46

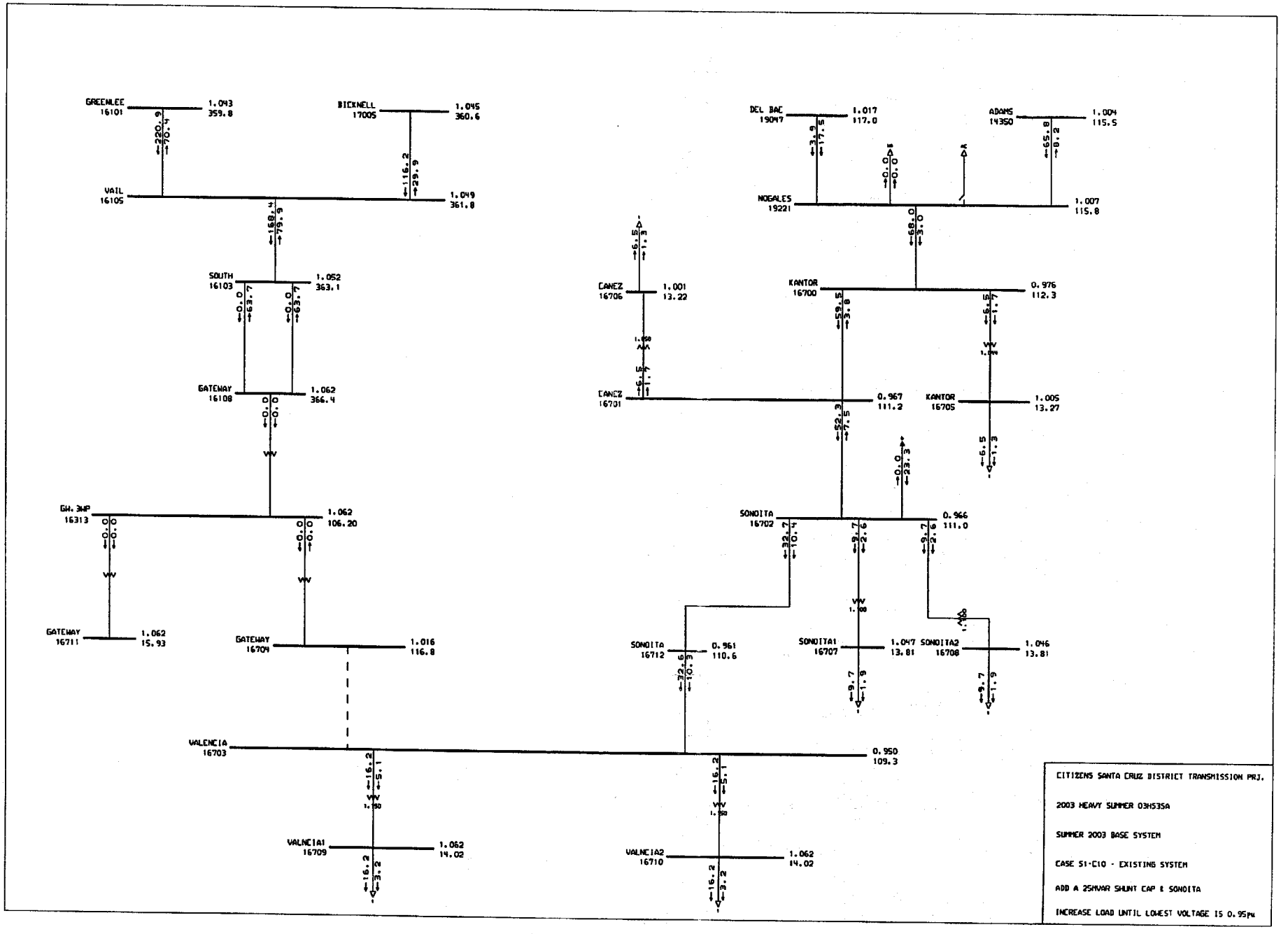
GREENLEE 16101 1.043 359.8
BICKNELL 17005 1.045 360.6
VAIL 16105 1.049 361.8
SOUTH 16103 1.052 363.1
GATEWAY 16108 1.062 366.4
GW. 3WP 16313 1.062 106.20
GATEWAY 16711 1.062 15.93
GATEWAY 16709 1.016 116.8
VALENCIA 16703 0.950 109.3
VALNCIA1 16709 1.062 14.02
VALNCIA2 16710 1.062 14.02
DEL BAC 19047 1.017 117.0
ADAMS 14350 1.004 115.5
NOGALES 19221 1.007 115.8
CANEZ 16706 1.001 13.22
CANEZ 16701 0.967 111.2
KANTOR 16700 0.976 112.3
KANTOR 16705 1.005 13.27
SONOITA 16702 0.966 111.0
SONOITA 16712 0.961 110.6
SONOITA1 16707 1.047 13.81
SONOITA2 16708 1.046 13.81
CITIZENS SANTA CRUZ DISTRICT TRANSMISSION PRJ.
2003 HEAVY SUMMER 03HS35A
SUMMER 2003 BASE SYSTEM
CASE S1-C10 - EXISTING SYSTEM
ADD A 25MVAR SHUNT CAP & SONOITA
INCREASE LOAD UNTIL LOWEST VOLTAGE IS 0.95PU

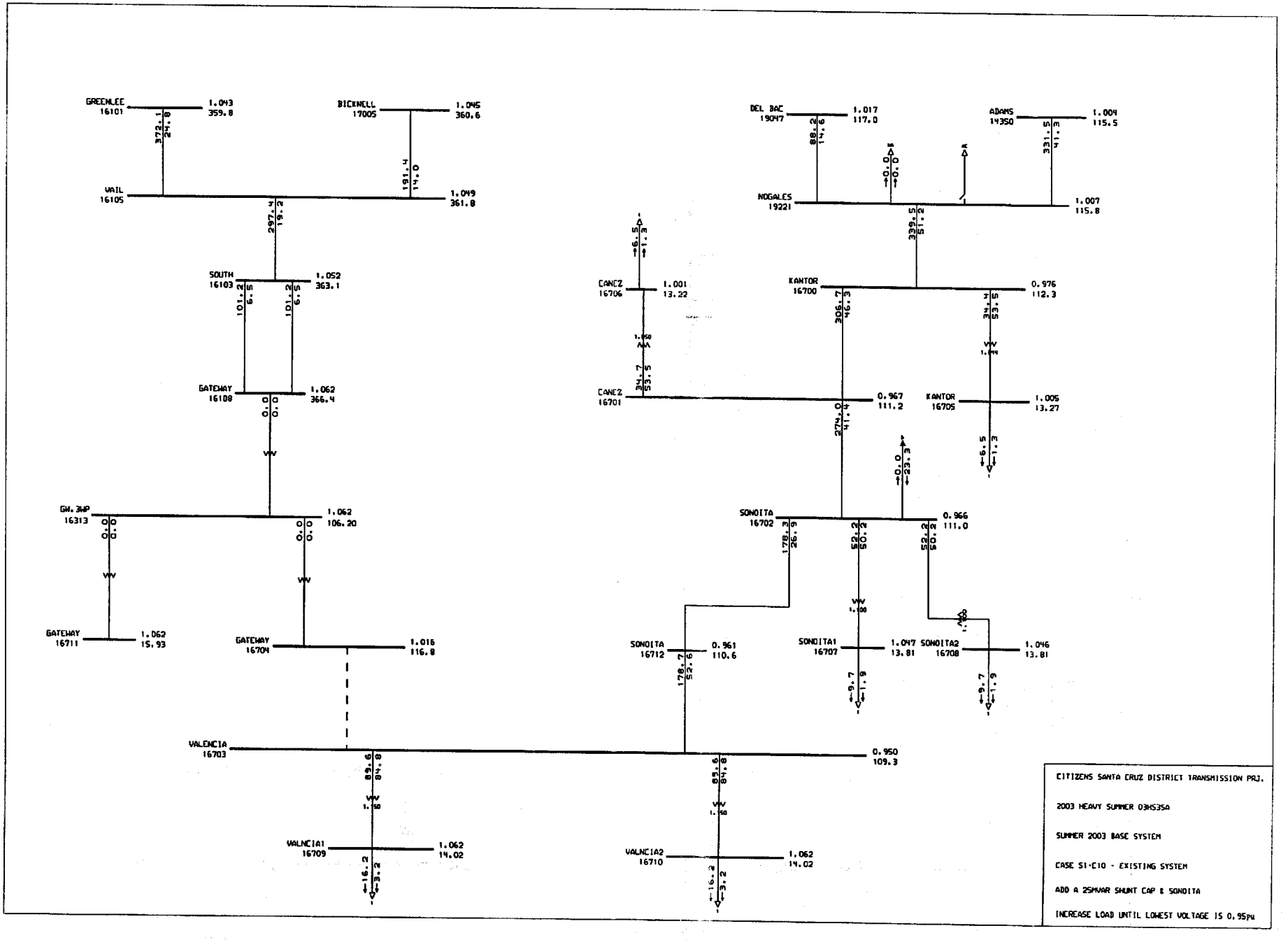
GREENLEE 16101 1.043 359.8
BICKNELL 17005 1.045 360.6
VAIL 16105 1.049 361.8
SOUTH 16103 1.052 363.1
GATEWAY 16108 1.062 366.4
GW.3WP 16313 1.062 106.20
GATEWAY 16711 1.062 15.93
GATEWAY 16704 1.015 116.8
VALENCIA 16703 0.950 109.3
VALNCIA1 16709 1.062 14.02
VALNCIA2 16710 1.062 14.02
DEL BAC 19047 1.017 117.0
ADAMS 14350 1.004 115.5
NOGALES 19221 1.007 115.8
CANEZ 16706 1.001 13.22
CANEZ 16701 0.967 111.2
KANTOR 16700 0.976 112.3
KANTOR 16705 1.005 13.27
SONOITA 16702 0.966 111.0
SONOITA 16712 0.961 110.6
SONOITA1 16707 1.047 13.81
SONOITA2 16708 1.046 13.81
CITIZENS SANTA CRUZ DISTRICT TRANSMISSION PRJ.
2003 HEAVY SUMMER 03HS35A
SUMMER 2003 BASE SYSTEM
CASE S1-C10 - EXISTING SYSTEM
ADD A 25MVAR SHUNT CAP & SONOITA
INCREASE LOAD UNTIL LOWEST VOLTAGE IS 0.95pu

WESTERN SYSTEMS COORDINATING COUNCIL
2003 HS3-SA APPROVED BASE CASE

--From-	--NAME--	--KV--	---To--	--NAME--	--KV--	CK	---P---	---Q---	--MVA--	-AMPS--	-%rate-	-rate--	unit	-Af	-At	-Ar	-Zf	-Zt	-Zo	-Ploss
16703	VALENCIA	115.00	16709	VALNCIA1	13.20	1	16.2	5.1	17.0	89.6	84.8	20.0	Mva	14	14	14	10	10	10	0.(
16703	VALENCIA	115.00	16710	VALNCIA2	13.20	1	16.2	5.1	17.0	89.6	84.8	20.0	Mva	14	14	14	10	10	10	-0.(
16701	CANEZ	115.00	16706	CANEZ	13.20	1	6.5	1.7	6.7	34.7	53.5	12.5	Mva	14	14	14	10	10	10	0.(
16700	KANTOR	115.00	16705	KANTOR	13.20	1	6.5	1.7	6.7	34.4	53.5	12.5	Mva	14	14	14	10	10	10	-0.(
16703	VALENCIA	115.00	16712	SONOITA	115.00	1	-32.3	-10.2	33.9	179.2	52.7	340.0	Amp	14	14	14	10	10	10	0.2
16700	KANTOR	115.00	19221	NOGALES	115.00	1	-66.0	2.1	66.0	339.6	51.2	662.7	Amp	14	14	14	10	10	10	2.(
16702	SONOITA	115.00	16708	SONOITA2	13.20	1	9.7	2.6	10.0	52.2	50.2	20.0	Mva	14	14	14	10	10	10	-0.(
16702	SONOITA	115.00	16707	SONOITA1	13.20	1	9.7	2.6	10.0	52.2	50.2	20.0	Mva	14	14	14	10	10	10	0.(
16101	GREENLEE	345.00	16104	SPRINGR	345.00	1	-363.7	54.1	367.7	589.9	48.2	1246.7	Amp	14	14	14	10	160	160	6.2
16700	KANTOR	115.00	16701	CANEZ	115.00	1	59.5	-3.8	59.6	306.7	46.3	662.7	Amp	14	14	14	10	10	10	0.8
16701	CANEZ	115.00	16702	SONOITA	115.00	1	52.3	-7.5	52.8	274.0	41.4	662.7	Amp	14	14	14	10	10	10	0.1
14350	ADAMS	115.00	19221	NOGALES	115.00	1	65.8	-8.2	66.3	331.5	41.3	803.3	Amp	14	14	14	10	10	140	1.6
16103	SOUTH	345.00	16306	SO.3WP2	100.00	1	242.4	28.6	244.1	388.2	36.4	672.0	Mva	14	14	14	10	160	160	0.1
16105	VAIL	345.00	16308	VAIL.3WP	100.00	1	166.1	82.7	185.6	296.1	27.8	672.0	Mva	14	14	14	10	160	160	0.(
16702	SONOITA	115.00	16712	SONOITA	115.00	1	32.7	10.4	34.3	178.3	27.0	662.7	Amp	14	14	14	10	10	10	0.(
16101	GREENLEE	345.00	16105	VAIL	345.00	1	220.9	-70.4	231.9	372.1	24.8	1499.4	Amp	14	14	14	10	10	160	2.6
16103	SOUTH	345.00	16107	WESTWING	345.00	1	-74.3	30.4	80.3	127.6	20.8	1124.6	Amp	14	14	14	10	160	160	0.5
16103	SOUTH	345.00	16105	VAIL	345.00	1	-168.2	68.3	181.5	288.7	19.2	1548.0	Amp	14	14	14	10	10	160	0.1
19047	DEL BAC	115.00	19221	NOGALES	115.00	1	3.9	17.5	17.9	88.2	15.3	602.5	Amp	14	14	14	10	10	140	0.(
16105	VAIL	345.00	17005	BICKNELL	345.00	1	-116.2	29.9	120.0	191.4	14.8	1365.1	Amp	14	14	14	10	10	170	0.1
19047	DEL BAC	115.00	19064	TUCSON	115.00	1	-6.0	-12.7	14.0	69.2	11.5	602.5	Amp	14	14	14	10	191	191	0.(
16101	GREENLEE	345.00	17010	GREEN-AE	345.00	1	-86.4	20.6	88.8	142.5	10.5	1365.1	Amp	14	14	14	10	170	170	0.(
16103	SOUTH	345.00	16108	GATEWAY	345.00	2	0.0	-63.7	63.7	101.2	6.5	1548.0	Amp	14	14	4	10	10	160	0.(
16103	SOUTH	345.00	16108	GATEWAY	345.00	1	0.0	-63.7	63.7	101.2	6.5	1548.0	Amp	14	14	4	10	10	160	0.(
19047	DEL BAC	115.00	19201	BLACKMTN	115.00	1	2.1	-4.8	5.2	25.9	4.3	602.5	Amp	14	14	14	10	140	140	0.(
16313	GW.3WP	100.00	16704	GATEWAY	115.00	1	0.0	-0.0	0.0	0.0	0.0	100.0	Mva	14	14	14	10	10	161	-0.0
16108	GATEWAY	345.00	16313	GW.3WP	100.00	1	0.0	0.0	0.0	0.0	0.0	100.0	Mva	14	14	14	10	10	161	0.0
14350	ADAMS	115.00	17001	APACHE	115.00	1	-97.2	-1.2	97.2	485.9	0.0	0.0	Amp	14	14	14	10	170	191	1.4
16313	GW.3WP	100.00	16711	GATEWAY	15.00	1	0.0	0.0	0.0	0.0	0.0	100.0	Mva	14	14	14	10	10	161	0.0

WESTERN SYSTEMS COORDINATING COUNCIL
2003 HS3-SA APPROVED BASE CASE

Zone	Zone_name	Loss_mw
10	SANTA CRUZ	9.50

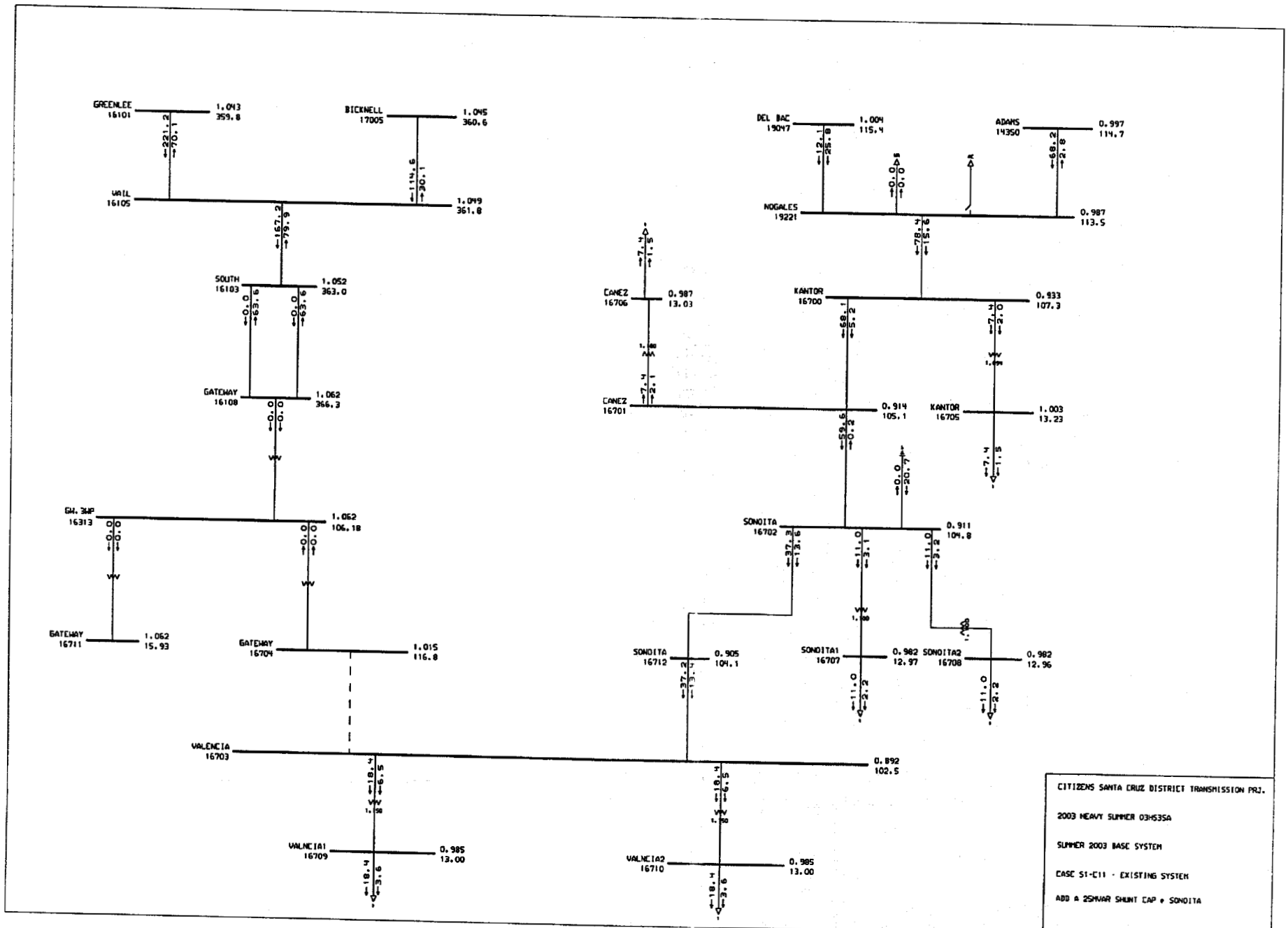
GREENLEE 16101 1.043 359.8
BICKNELL 17005 1.045 360.6
VAIL 16105 1.049 361.8
SOUTH 16103 1.052 363.0
GATEWAY 16108 1.062 366.3
GW. 3WP 16313 1.062 106.18
GATEWAY 16711 1.062 15.93
GATEWAY 16704 1.015 116.8
VALENCIA 16703 0.892 102.5
VALNCIA1 16709 0.985 13.00
VALNCIA2 16710 0.985 13.00
DEL BAC 19047 1.004 115.4
ADAMS 14350 0.997 114.7
NOGALES 19221 0.987 113.5
CANEZ 16706 0.987 13.03
KANTOR 16700 0.933 107.3
CANEZ 16701 0.914 105.1
KANTOR 16705 1.003 13.23
SONOITA 16702 0.911 104.8
SONOITA 16712 0.905 104.1
SONOITA1 16707 0.982 12.97
SONOITA2 16708 0.982 12.96
CITIZENS SANTA CRUZ DISTRICT TRANSMISSION PRJ.
2003 HEAVY SUMMER 03HS35A
SUMMER 2003 BASE SYSTEM
CASE S1-C11 - EXISTING SYSTEM
ADD A 25MVAR SHUNT CAP @ SONOITA

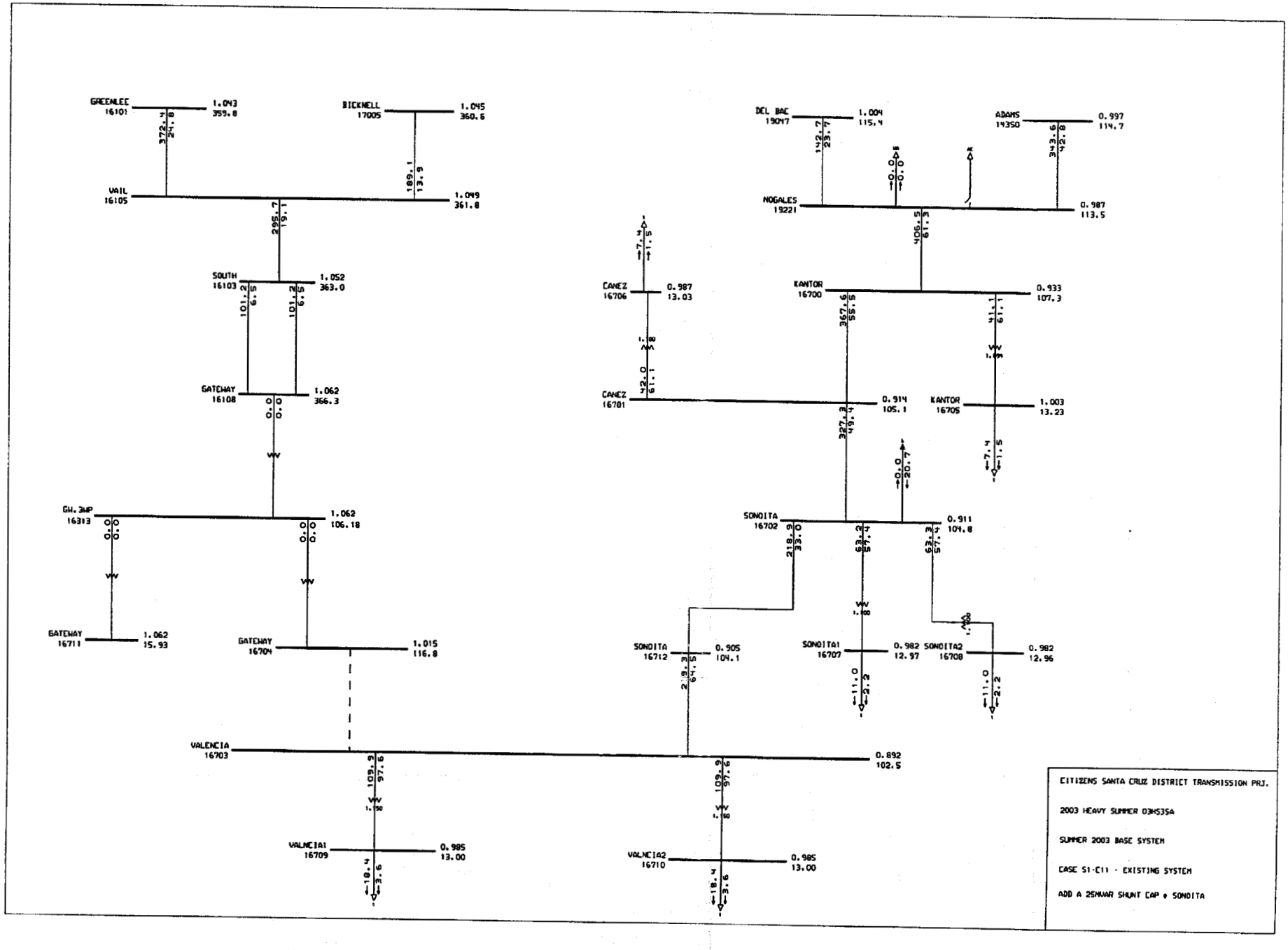
GREENLEE 16101 1.043 359.8
BICKNELL 17005 1.045 360.6
VAIL 16105 1.049 361.8
SOUTH 16103 1.052 363.0
GATEWAY 16108 1.062 366.3
GW.3WP 16313 1.062 106.18
GATEWAY 16711 1.062 15.93
GATEWAY 16704 1.015 116.8
VALENCIA 16703 0.892 102.5
VALNCIA1 16709 0.985 13.00
VALNCIA2 16710 0.985 13.00
DEL BAC 19047 1.004 115.4
ADAMS 14350 0.997 114.7
NOGALES 19221 0.987 113.5
CANEZ 16706 0.987 13.03
KANTOR 16700 0.933 107.3
CANEZ 16701 0.914 105.1
KANTOR 16705 1.003 13.23
SONOITA 16702 0.911 104.8
SONOITA 16712 0.905 104.1
SONOITA1 16707 0.982 12.97
SONOITA2 16708 0.982 12.96
CITIZENS SANTA CRUZ DISTRICT TRANSMISSION PRJ.
2003 HEAVY SUMMER 03HS35A
SUMMER 2003 BASE SYSTEM
CASE S1-C11 - EXISTING SYSTEM
ADD A 25MVAR SHUNT CAP @ SONOITA

WESTERN SYSTEMS COORDINATING COUNCIL
2003 HS3-SA APPROVED BASE CASE

--From-	--NAME--	--KV--	---To--	--NAME--	--KV--	CK	---P---	---Q---	--MVA--	-AMPS--	-%rate-	-rate--	unit	-Af	-At	-Ar	-Zf	-Zt	-Zo	-Ploss
16703	VALENCIA	115.00	16709	VALNCIA1	13.20	1	18.4	6.5	19.5	109.9	97.6	20.0	Mva	14	14	14	10	10	10	-0.0
16703	VALENCIA	115.00	16710	VALNCIA2	13.20	1	18.4	6.5	19.5	109.9	97.6	20.0	Mva	14	14	14	10	10	10	0.0
16703	VALENCIA	115.00	16712	SONOITA	115.00	1	-36.8	-13.1	39.0	219.8	64.7	340.0	Amp	14	14	14	10	10	10	0.4
16700	KANTOR	115.00	19221	NOGALES	115.00	1	-75.5	-7.2	75.8	408.0	61.6	662.7	Amp	14	14	14	10	10	10	2.9
16701	CANEZ	115.00	16706	CANEZ	13.20	1	7.4	2.1	7.6	42.0	61.1	12.5	Mva	14	14	14	10	10	10	-0.0
16700	KANTOR	115.00	16705	KANTOR	13.20	1	7.4	2.0	7.6	41.1	61.1	12.5	Mva	14	14	14	10	10	10	0.0
16702	SONOITA	115.00	16708	SONOITA2	13.20	1	11.0	3.2	11.5	63.3	57.4	20.0	Mva	14	14	14	10	10	10	0.0
16702	SONOITA	115.00	16707	SONOITA1	13.20	1	11.0	3.1	11.5	63.2	57.4	20.0	Mva	14	14	14	10	10	10	0.0
16700	KANTOR	115.00	16701	CANEZ	115.00	1	68.1	5.2	68.3	367.6	55.5	662.7	Amp	14	14	14	10	10	10	1.1
16701	CANEZ	115.00	16702	SONOITA	115.00	1	59.6	-0.2	59.6	327.3	49.4	662.7	Amp	14	14	14	10	10	10	0.2
16101	GREENLEE	345.00	16104	SPRINGR	345.00	1	-364.7	54.3	368.7	591.6	48.3	1246.7	Amp	14	14	14	10	160	160	6.4
14350	ADAMS	115.00	19221	NOGALES	115.00	1	68.2	-2.8	68.3	343.6	42.8	803.3	Amp	14	14	14	10	10	140	1.7
16103	SOUTH	345.00	16306	SO.3WP2	100.00	1	242.6	28.5	244.3	388.6	36.4	672.0	Mva	14	14	14	10	160	160	0.1
16702	SONOITA	115.00	16712	SONOITA	115.00	1	37.3	13.6	39.7	218.9	33.1	662.7	Amp	14	14	14	10	10	10	0.1
16105	VAIL	345.00	16308	VAIL.3WP	100.00	1	166.0	82.7	185.4	296.0	27.8	672.0	Mva	14	14	14	10	160	160	0.0
16101	GREENLEE	345.00	16105	VAIL	345.00	1	221.2	-70.1	232.1	372.4	24.8	1499.4	Amp	14	14	14	10	10	160	2.6
19047	DEL BAC	115.00	19221	NOGALES	115.00	1	12.1	25.8	28.5	142.7	24.3	602.5	Amp	14	14	14	10	10	140	0.0
16103	SOUTH	345.00	16107	WESTWING	345.00	1	-75.7	30.4	81.6	129.8	20.9	1124.6	Amp	14	14	14	10	160	160	0.5
16103	SOUTH	345.00	16105	VAIL	345.00	1	-167.0	68.3	180.4	286.9	19.1	1548.0	Amp	14	14	14	10	10	160	0.1
19047	DEL BAC	115.00	19064	TUCSON	115.00	1	-11.6	-18.2	21.6	108.1	17.9	602.5	Amp	14	14	14	10	191	191	0.0
16105	VAIL	345.00	17005	BICKNELL	345.00	1	-114.6	30.1	118.5	189.1	14.7	1365.1	Amp	14	14	14	10	10	170	0.1
16101	GREENLEE	345.00	17010	GREEN-AE	345.00	1	-85.2	20.2	87.6	140.6	10.3	1365.1	Amp	14	14	14	10	170	170	0.0
16103	SOUTH	345.00	16108	GATEWAY	345.00	2	0.0	-63.6	63.6	101.2	6.5	1548.0	Amp	14	14	4	10	10	160	0.0
16103	SOUTH	345.00	16108	GATEWAY	345.00	1	0.0	-63.6	63.6	101.2	6.5	1548.0	Amp	14	14	4	10	10	160	0.0
19047	DEL BAC	115.00	19201	BLACKMTN	115.00	1	-0.5	-7.6	7.6	38.2	6.3	602.5	Amp	14	14	14	10	140	140	0.0
16313	GW.3WP	100.00	16704	GATEWAY	115.00	1	-0.0	-0.0	0.0	0.0	0.0	100.0	Mva	14	14	14	10	10	161	-0.0
16108	GATEWAY	345.00	16313	GW.3WP	100.00	1	0.0	0.0	0.0	0.0	0.0	100.0	Mva	14	14	14	10	10	161	0.0
14350	ADAMS	115.00	17001	APACHE	115.00	1	-99.6	-6.6	99.8	502.4	0.0	0.0	Amp	14	14	14	10	170	191	1.5
16313	GW.3WP	100.00	16711	GATEWAY	15.00	1	0.0	0.0	0.0	0.0	0.0	100.0	Mva	14	14	14	10	10	161	0.0

WESTERN SYSTEMS COORDINATING COUNCIL
2003 HS3-SA APPROVED BASE CASE

Zone	Zone_name	Loss_mw
10	SANTA CRUZ	11.26

APPENDIX C- Scenario 2 Power Flow Cases
Power Flow Diagrams

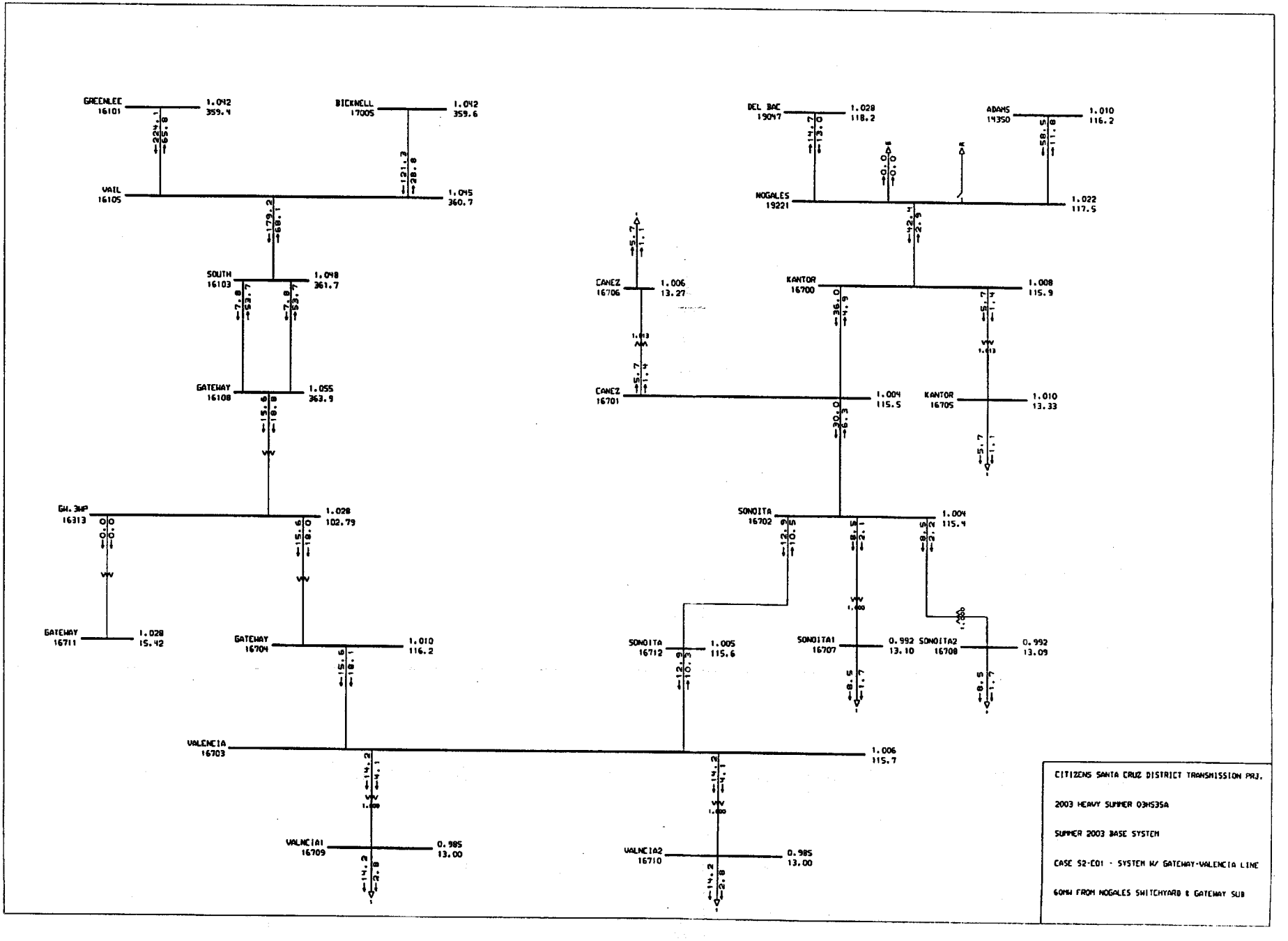
GREENLEE 16101 1.042 359.4
BICKNELL 17005 1.042 359.6
DEL BAC 19047 1.028 118.2
ADAMS 14350 1.010 116.2
VAIL 16105 1.045 360.7
NOGALES 19221 1.022 117.5
SOUTH 16103 1.048 361.7
CANEZ 16706 1.006 13.27
KANTOR 16700 1.008 115.9
GATEWAY 16108 1.055 363.9
CANEZ 16701 1.004 115.5
KANTOR 16705 1.010 13.33
GW.3WP 16313 1.028 102.79
SONOITA 16702 1.004 115.4
GATEWAY 16711 1.028 15.42
GATEWAY 16704 1.010 116.2
SONOITA 16712 1.005 115.6
SONOITA1 16707 0.992 13.10
SONOITA2 16708 0.992 13.09
VALENCIA 16703 1.006 115.7
VALNCIA1 16709 0.985 13.00
VALNCIA2 16710 0.985 13.00
CITIZENS SANTA CRUZ DISTRICT TRANSMISSION PRJ.
2003 HEAVY SUMMER 03HS35A
SUMMER 2003 BASE SYSTEM
CASE S2-C01 - SYSTEM W/ GATEWAY-VALENCIA LINE
60MW FROM NOGALES SWITCHYARD & GATEWAY SUB

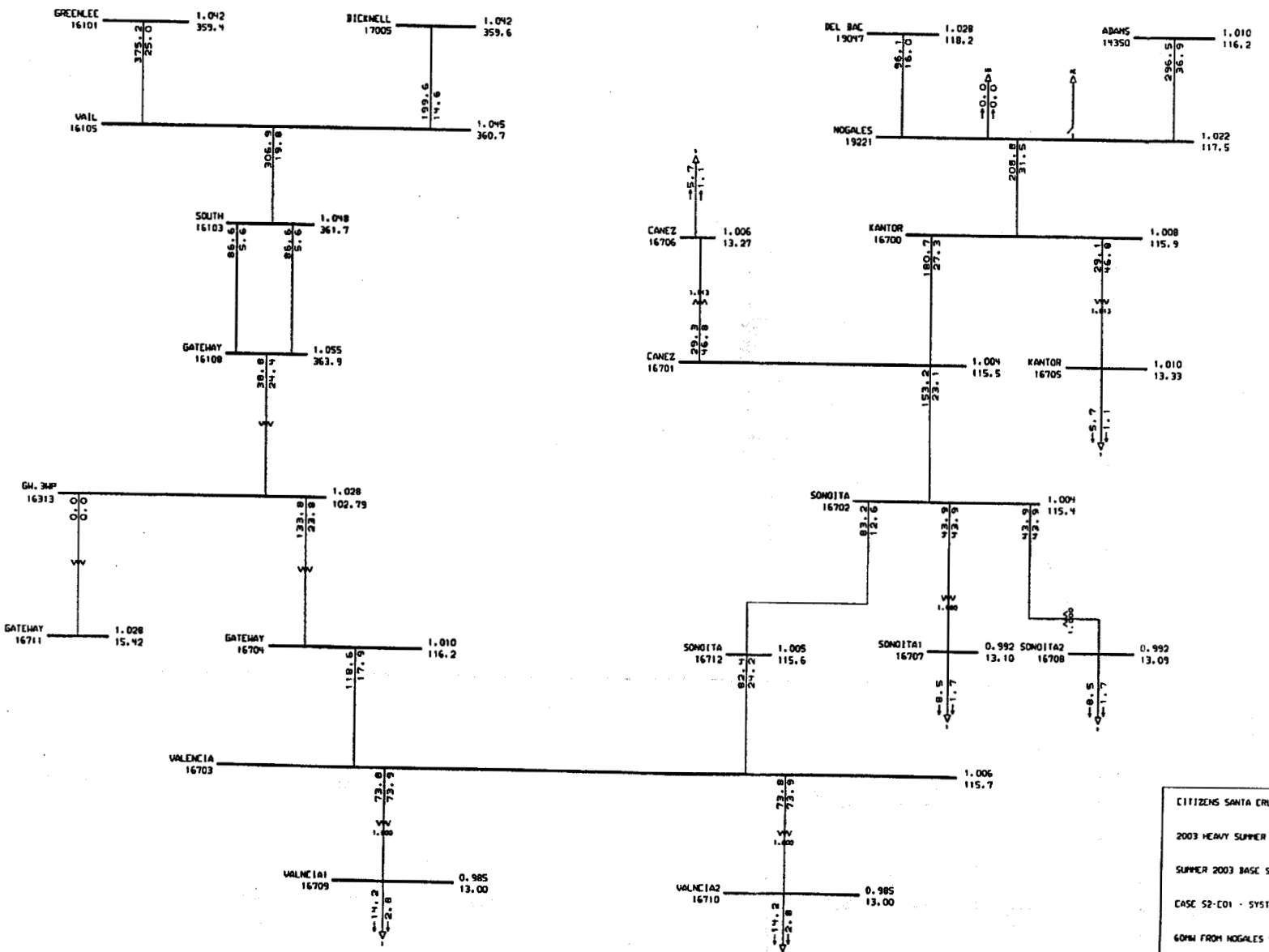

CITIZENS SANTA CRUZ DISTRICT TRANSMISSION PRJ.

2003 HEAVY SUMMER 03HS35A

SUMMER 2003 BASE SYSTEM

CASE S2-C01 - SYSTEM W/ GATEWAY-VALENCIA LINE

60MW FROM NOGALES SWITCHYARD & GATEWAY SUB

WESTERN SYSTEMS COORDINATING COUNCIL
2003 HS3-SA APPROVED BASE CASE

--From-	--NAME--	--KV--	---To--	--NAME--	--KV--	CK	---P---	---Q---	--MVA--	-AMPS--	-%rate-	-rate--	unit	-Af	-At	-Ar	-Zf	-Zt	-Zo	-Plos
16703	VALENCIA	115.00	16709	VALNCIA1	13.20	1	14.2	4.1	14.8	73.8	73.9	20.0	Mva	14	14	14	10	10	10	0.
16703	VALENCIA	115.00	16710	VALNCIA2	13.20	1	14.2	4.1	14.8	73.8	73.9	20.0	Mva	14	14	14	10	10	10	-0.
16101	GREENLEE	345.00	16104	SPRINGR	345.00	1	-362.6	51.0	366.2	588.3	48.0	1246.7	Amp	14	14	14	10	160	160	6.
16701	CANEZ	115.00	16706	CANEZ	13.20	1	5.7	1.4	5.9	29.3	46.8	12.5	Mva	14	14	14	10	10	10	0.
16700	KANTOR	115.00	16705	KANTOR	13.20	1	5.7	1.4	5.9	29.1	46.8	12.5	Mva	14	14	14	10	10	10	-0.
16702	SONOITA	115.00	16708	SONOITA2	13.20	1	8.5	2.2	8.8	43.9	43.9	20.0	Mva	14	14	14	10	10	10	0.
16702	SONOITA	115.00	16707	SONOITA1	13.20	1	8.5	2.1	8.8	43.9	43.9	20.0	Mva	14	14	14	10	10	10	-0.
14350	ADAMS	115.00	19221	NOGALES	115.00	1	58.5	-11.8	59.7	296.5	36.9	803.3	Amp	14	14	14	10	10	140	1.
16103	SOUTH	345.00	16306	SO.3WP2	100.00	1	239.5	24.2	240.7	384.3	35.9	672.0	Mva	14	14	14	10	160	160	0.
16700	KANTOR	115.00	19221	NOGALES	115.00	1	-41.6	3.5	41.8	208.0	31.5	662.7	Amp	14	14	14	10	10	10	0.
16700	KANTOR	115.00	16701	CANEZ	115.00	1	36.0	-4.9	36.3	180.7	27.3	662.7	Amp	14	14	14	10	10	10	0.
16105	VAIL	345.00	16308	VAIL.3WP	100.00	1	163.5	75.6	180.1	288.3	27.0	672.0	Mva	14	14	14	10	160	160	0.
16101	GREENLEE	345.00	16105	VAIL	345.00	1	224.1	-65.8	233.6	375.3	25.0	1499.4	Amp	14	14	14	10	10	160	2.
16108	GATEWAY	345.00	16313	GW.3WP	100.00	1	15.6	18.8	24.4	38.8	24.4	100.0	Mva	14	14	14	10	10	161	-0.
16703	VALENCIA	115.00	16712	SONOITA	115.00	1	-12.8	10.0	16.3	81.3	24.2	340.0	Amp	14	14	14	10	10	10	0.
16313	GW.3WP	100.00	16704	GATEWAY	115.00	1	15.6	18.0	23.8	133.8	23.9	100.0	Mva	14	14	14	10	10	161	0.
16701	CANEZ	115.00	16702	SONOITA	115.00	1	30.0	-6.3	30.6	153.2	23.1	662.7	Amp	14	14	14	10	10	10	0.
16103	SOUTH	345.00	16107	WESTWING	345.00	1	-76.1	26.4	80.6	128.6	20.4	1124.6	Amp	14	14	14	10	160	160	0.
16103	SOUTH	345.00	16105	VAIL	345.00	1	-179.0	56.8	187.8	299.8	19.8	1548.0	Amp	14	14	14	10	10	160	0.
16703	VALENCIA	115.00	16704	GATEWAY	115.00	1	-15.5	-18.2	24.0	119.6	18.0	662.7	Amp	14	14	14	10	10	10	0.
19047	DEL BAC	115.00	19221	NOGALES	115.00	1	-14.7	13.0	19.7	96.1	16.4	602.5	Amp	14	14	14	10	10	140	0.
16105	VAIL	345.00	17005	BICKNELL	345.00	1	-121.3	28.8	124.7	199.6	15.4	1365.1	Amp	14	14	14	10	10	170	0.
16702	SONOITA	115.00	16712	SONOITA	115.00	1	12.9	-10.5	16.6	83.2	12.6	662.7	Amp	14	14	14	10	10	10	0.
16101	GREENLEE	345.00	17010	GREEN-AE	345.00	1	-89.7	20.6	92.0	147.9	10.9	1365.1	Amp	14	14	14	10	170	170	0.
19047	DEL BAC	115.00	19064	TUCSON	115.00	1	6.5	-9.8	11.8	57.6	9.6	602.5	Amp	14	14	14	10	191	191	0.
19047	DEL BAC	115.00	19201	BLACKMTN	115.00	1	8.2	-3.2	8.8	43.1	7.1	602.5	Amp	14	14	14	10	140	140	0.
16103	SOUTH	345.00	16108	GATEWAY	345.00	2	7.8	-53.7	54.2	86.6	5.6	1548.0	Amp	14	14	4	10	10	160	0.
16103	SOUTH	345.00	16108	GATEWAY	345.00	1	7.8	-53.7	54.2	86.6	5.6	1548.0	Amp	14	14	4	10	10	160	0.
14350	ADAMS	115.00	17001	APACHE	115.00	1	-89.9	2.4	89.9	446.8	0.0	0.0	Amp	14	14	14	10	170	191	1.
16313	GW.3WP	100.00	16711	GATEWAY	15.00	1	0.0	0.0	0.0	0.0	0.0	100.0	Mva	14	14	14	10	10	161	0.

WESTERN SYSTEMS COORDINATING COUNCIL
2003 HS3-SA APPROVED BASE CASE

Zone	--------Zone_name----------	Loss_mw
10	SANTA CRUZ	6.89

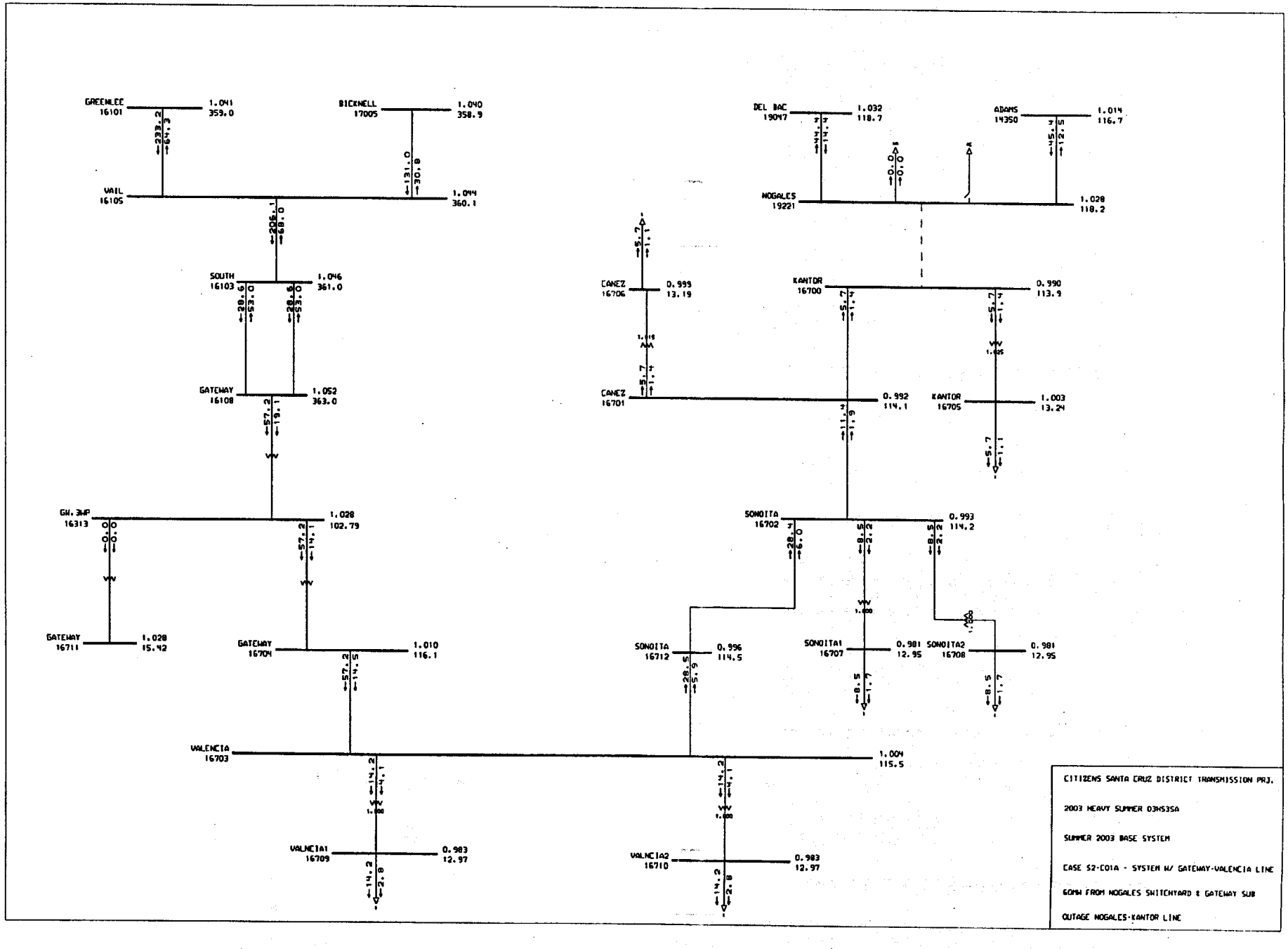
GREENLEE 16101 1.041 359.0
BICKNELL 17005 1.040 358.9
VAIL 16105 1.044 360.1
SOUTH 16103 1.046 361.0
GATEWAY 16108 1.052 363.0
GW.3WP 16313 1.028 102.79
GATEWAY 16711 1.028 15.42
GATEWAY 16704 1.010 116.1
VALENCIA 16703 1.004 115.5
VALNCIA1 16709 0.983 12.97
VALNCIA2 16710 0.983 12.97
DEL BAC 19047 1.032 118.7
ADAMS 14350 1.014 116.7
NOGALES 19221 1.028 118.2
CANEZ 16706 0.999 13.19
KANTOR 16700 0.990 113.9
CANEZ 16701 0.992 114.1
KANTOR 16705 1.003 13.24
SONOITA 16702 0.993 114.2
SONOITA 16712 0.996 114.5
SONOITA1 16707 0.981 12.95
SONOITA2 16708 0.981 12.95
CITIZENS SANTA CRUZ DISTRICT TRANSMISSION PRJ.
2003 HEAVY SUMMER 03HS3SA
SUMMER 2003 BASE SYSTEM
CASE S2-C01A - SYSTEM W/ GATEWAY-VALENCIA LINE
60MW FROM NOGALES SWITCHYARD & GATEWAY SUB
OUTAGE NOGALES-KANTOR LINE

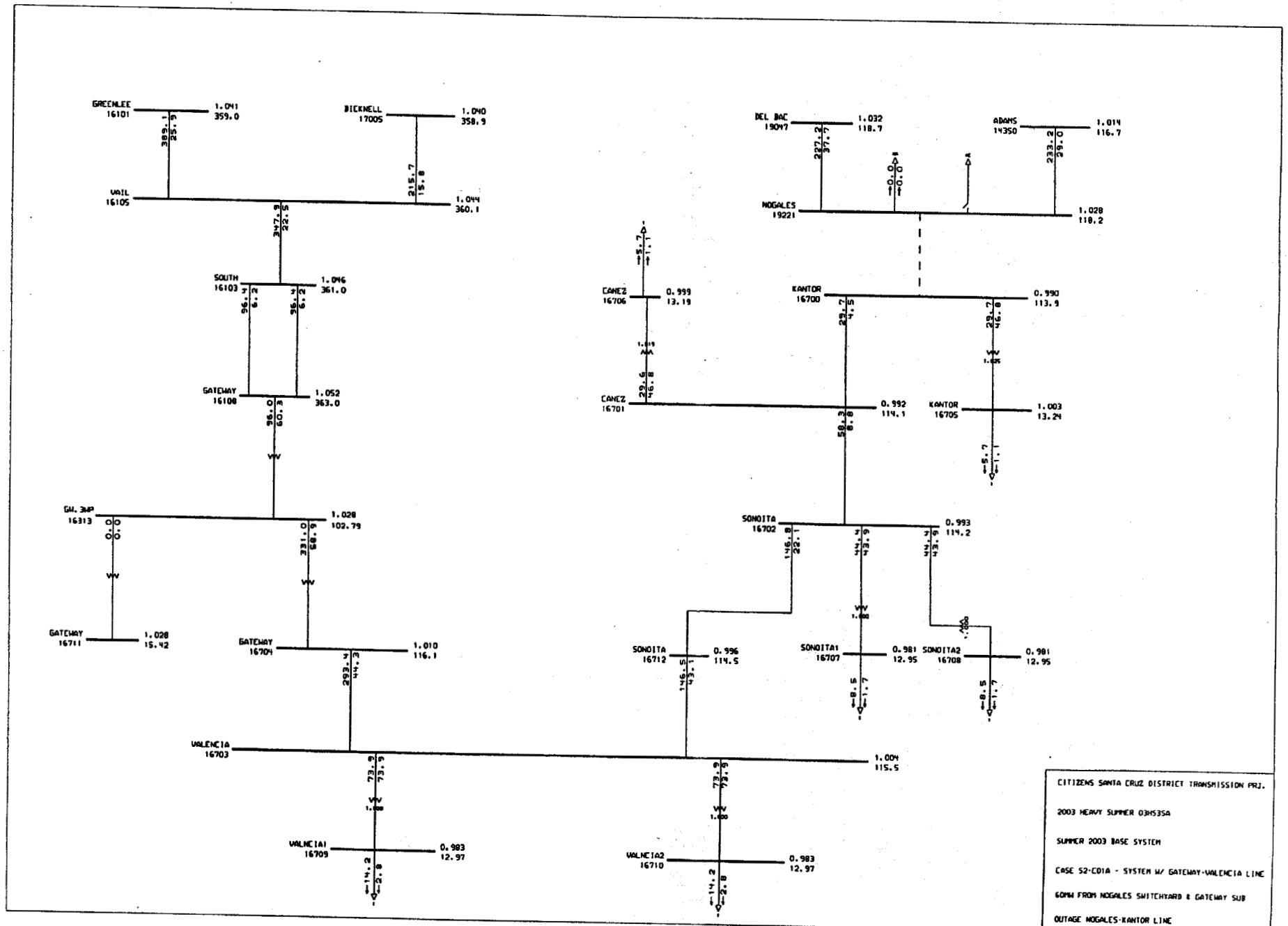
GREENLEE 16101 1.041 359.0
BICKNELL 17005 1.040 358.9
VAIL 16105 1.044 360.1
SOUTH 16103 1.046 361.0
GATEWAY 16108 1.052 363.0
GW. 34P 16313 1.028 102.79
GATEWAY 16711 1.028 15.42
GATEWAY 16704 1.010 116.1
VALENCIA 16703 1.004 115.5
VALNCIA1 16709 0.983 12.97
VALNCIA2 16710 0.983 12.97
SONOITA 16712 0.996 114.5
SONOITA 16702 0.993 114.2
SONOITA1 16707 0.981 12.95
SONOITA2 16708 0.981 12.95
CANEZ 16701 0.992 114.1
CANEZ 16706 0.999 13.19
KANTOR 16700 0.990 113.9
KANTOR 16705 1.003 13.24
NOGALES 19221 1.028 118.2
DEL BAC 19047 1.032 118.7
ADAMS 14350 1.014 116.7
CITIZENS SANTA CRUZ DISTRICT TRANSMISSION PRJ.
2003 HEAVY SUMMER 03HS3SA
SUMMER 2003 BASE SYSTEM
CASE S2-C01A - SYSTEM W/ GATEWAY-VALENCIA LINE
60MW FROM NOGALES SWITCHYARD & GATEWAY SUB
OUTAGE NOGALES-KANTOR LINE

WESTERN SYSTEMS COORDINATING COUNCIL
2003 HS3-SA APPROVED BASE CASE

--From-	--NAME--	--KV--	---To--	--NAME--	--KV--	CK	---P---	---Q---	--MVA--	-AMPS--	-%rate-	-rate--	unit	-Af	-At	-Ar	-Zf	-Zt	-Zo	-Ploss
16703	VALENCIA	115.00	16709	VALNCIA1	13.20	1	14.2	4.1	14.8	73.9	73.9	20.0	Mva	14	14	14	10	10	10	-0.0
16703	VALENCIA	115.00	16710	VALNCIA2	13.20	1	14.2	4.1	14.8	73.9	73.9	20.0	Mva	14	14	14	10	10	10	0.0
16108	GATEWAY	345.00	16313	GW.3WP	100.00	1	57.2	19.1	60.3	96.0	60.3	100.0	Mva	14	14	14	10	10	161	0.0
16313	GW.3WP	100.00	16704	GATEWAY	115.00	1	57.2	14.1	58.9	331.1	59.0	100.0	Mva	14	14	14	10	10	161	0.0
16101	GREENLEE	345.00	16104	SPRINGR	345.00	1	-364.9	49.6	368.3	592.2	48.3	1246.7	Amp	14	14	14	10	160	160	6.4
16700	KANTOR	115.00	16705	KANTOR	13.20	1	5.7	1.4	5.9	29.7	46.8	12.5	Mva	14	14	14	10	10	10	-0.0
16701	CANEZ	115.00	16706	CANEZ	13.20	1	5.7	1.4	5.9	29.6	46.8	12.5	Mva	14	14	14	10	10	10	-0.0
16703	VALENCIA	115.00	16704	GATEWAY	115.00	1	-57.0	-14.1	58.7	293.7	44.3	662.7	Amp	14	14	14	10	10	10	0.1
16702	SONOITA	115.00	16708	SONOITA2	13.20	1	8.5	2.2	8.8	44.4	43.9	20.0	Mva	14	14	14	10	10	10	-0.0
16702	SONOITA	115.00	16707	SONOITA1	13.20	1	8.5	2.2	8.8	44.4	43.9	20.0	Mva	14	14	14	10	10	10	0.0
16703	VALENCIA	115.00	16712	SONOITA	115.00	1	28.6	5.8	29.2	146.1	43.1	340.0	Amp	14	14	14	10	10	10	0.1
19047	DEL BAC	115.00	19221	NOGALES	115.00	1	-44.4	14.4	46.7	227.2	37.9	602.5	Amp	14	14	14	10	10	140	0.2
16103	SOUTH	345.00	16306	SO.3WP2	100.00	1	232.9	22.9	234.0	374.2	34.9	672.0	Mva	14	14	14	10	160	160	0.1
14350	ADAMS	115.00	19221	NOGALES	115.00	1	45.4	-12.5	47.1	233.2	29.0	803.3	Amp	14	14	14	10	10	140	0.8
16101	GREENLEE	345.00	16105	VAIL	345.00	1	233.2	-64.3	241.9	389.1	25.9	1499.4	Amp	14	14	14	10	10	160	2.9
16105	VAIL	345.00	16308	VAIL.3WP	100.00	1	155.2	72.9	171.5	274.9	25.7	672.0	Mva	14	14	14	10	160	160	0.0
19047	DEL BAC	115.00	19064	TUCSON	115.00	1	26.5	-10.9	28.6	139.2	23.1	602.5	Amp	14	14	14	10	191	191	0.0
16103	SOUTH	345.00	16105	VAIL	345.00	1	-205.8	57.4	213.6	341.7	22.5	1548.0	Amp	14	14	14	10	10	160	0.2
16702	SONOITA	115.00	16712	SONOITA	115.00	1	-28.4	-6.0	29.0	146.8	22.1	662.7	Amp	14	14	14	10	10	10	0.0
16103	SOUTH	345.00	16107	WESTWING	345.00	1	-84.4	25.8	88.2	141.1	20.9	1124.6	Amp	14	14	14	10	160	160	0.6
16105	VAIL	345.00	17005	BICKNELL	345.00	1	-131.0	30.8	134.6	215.7	16.5	1365.1	Amp	14	14	14	10	10	170	0.1
19047	DEL BAC	115.00	19201	BLACKMTN	115.00	1	18.0	-3.5	18.3	89.1	14.8	602.5	Amp	14	14	14	10	140	140	0.0
16101	GREENLEE	345.00	17010	GREEN-AE	345.00	1	-95.3	21.5	97.7	157.2	11.6	1365.1	Amp	14	14	14	10	170	170	0.0
16701	CANEZ	115.00	16702	SONOITA	115.00	1	-11.4	-1.9	11.5	58.3	8.8	662.7	Amp	14	14	14	10	10	10	0.0
16103	SOUTH	345.00	16108	GATEWAY	345.00	2	28.6	-53.0	60.3	96.4	6.2	1548.0	Amp	14	14	4	10	10	160	0.0
16103	SOUTH	345.00	16108	GATEWAY	345.00	1	28.6	-53.0	60.3	96.4	6.2	1548.0	Amp	14	14	4	10	10	160	0.0
16700	KANTOR	115.00	16701	CANEZ	115.00	1	-5.7	-1.4	5.9	29.7	4.5	662.7	Amp	14	14	14	10	10	10	0.0
16313	GW.3WP	100.00	16711	GATEWAY	15.00	1	0.0	0.0	0.0	0.0	0.0	100.0	Mva	14	14	14	10	10	161	0.0
14350	ADAMS	115.00	17001	APACHE	115.00	1	-76.8	3.1	76.9	380.5	0.0	0.0	Amp	14	14	14	10	170	191	0.8

WESTERN SYSTEMS COORDINATING COUNCIL
2003 HS3-SA APPROVED BASE CASE

Zone	Zone_name	Loss_mw
10	SANTA CRUZ	5.81

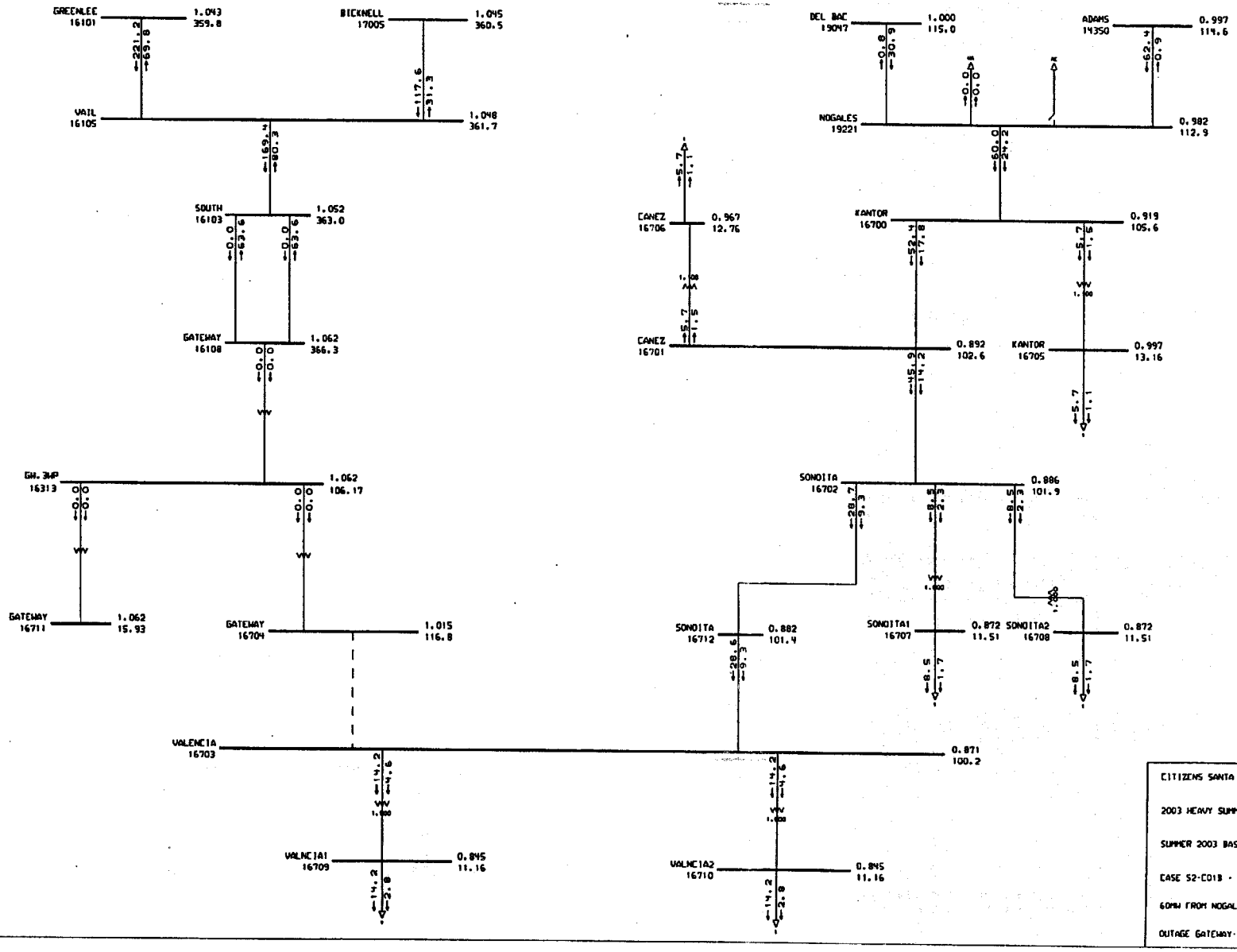
GREENLEE 16101 1.043 359.8
BICKNELL 17005 1.045 360.5
VAIL 16105 1.048 361.7
SOUTH 16103 1.052 363.0
GATEWAY 16108 1.062 366.3
GW.3MP 16313 1.062 106.17
GATEWAY 16711 1.062 15.93
GATEWAY 16704 1.015 116.8
VALENCIA 16703 0.871 100.2
VALNCIA1 16709 0.845 11.16
VALNCIA2 16710 0.845 11.16
DEL BAC 19047 1.000 115.0
ADAMS 14350 0.997 119.6
NOGALES 19221 0.982 112.9
CANEZ 16706 0.967 12.76
KANTOR 16700 0.919 105.6
CANEZ 16701 0.892 102.6
KANTOR 16705 0.997 13.16
SONOITA 16702 0.886 101.9
SONOITA 16712 0.882 101.4
SONOITA1 16707 0.872 11.51
SONOITA2 16708 0.872 11.51
CITIZENS SANTA CRUZ DISTRICT TRANSMISSION PRJ.
2003 HEAVY SUMMER 03HS35A
SUMMER 2003 BASE SYSTEM
CASE S2-C01B - SYSTEM W/ GATEWAY-VALENCIA LINE
60MW FROM NOGALES SWITCHYARD & GATEWAY SUB
OUTAGE GATEWAY-VALENCIA LINE

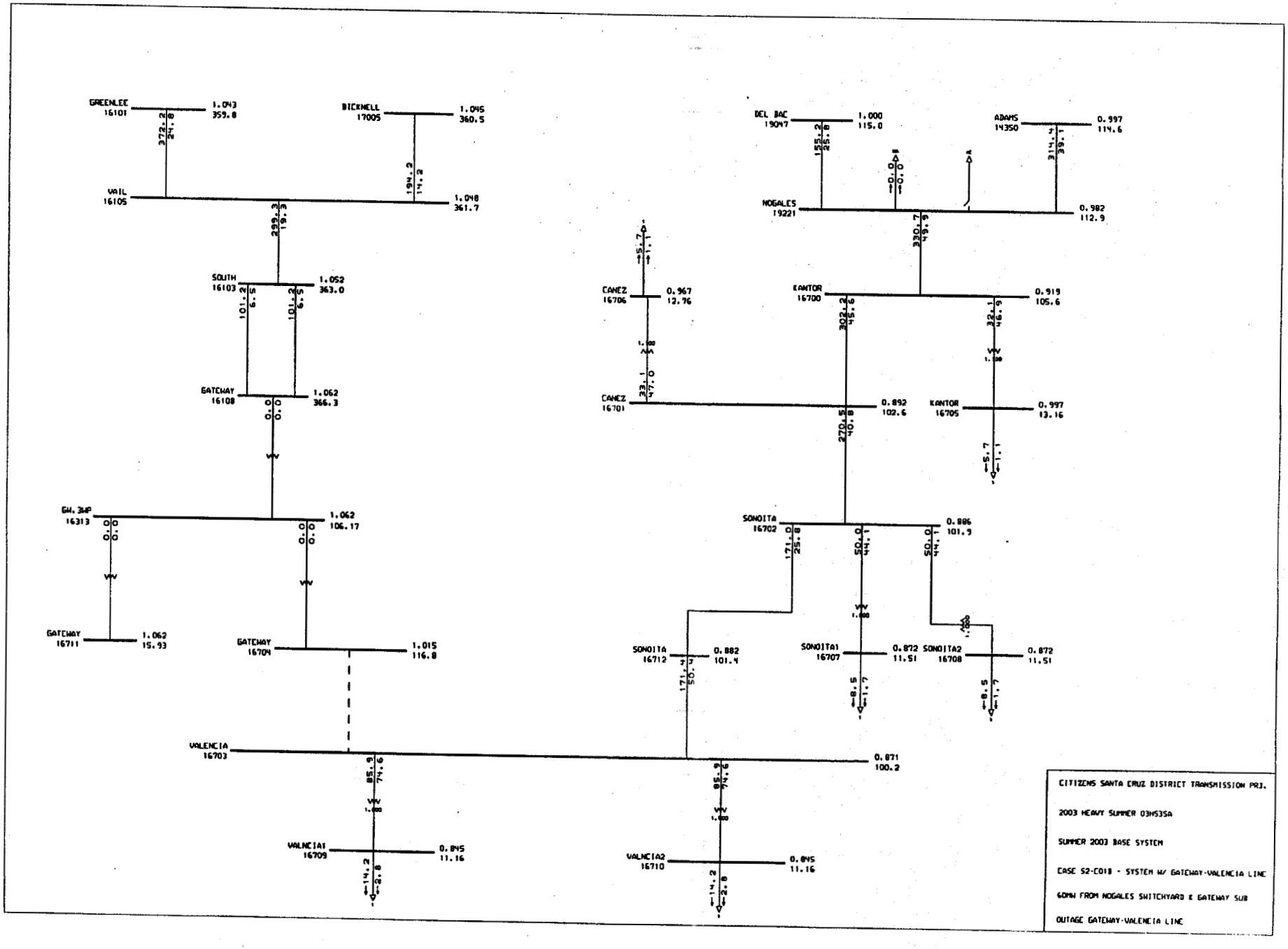
GREENLEE 16101 1.043 359.8
BICKNELL 17005 1.045 360.5
VAIL 16105 1.048 361.7
SOUTH 16103 1.052 363.0
GATEWAY 16108 1.062 366.3
GW.34P 16313 1.062 106.17
GATEWAY 16711 1.062 15.93
GATEWAY 16704 1.015 116.8
VALENCIA 16703 0.871 100.2
VALNCIA1 16709 0.845 11.16
VALNCIA2 16710 0.845 11.16
DEL BAC 19047 1.000 115.0
ADAMS 14350 0.997 114.6
NOGALES 19221 0.982 112.9
CANEZ 16706 0.967 12.76
KANTOR 16700 0.919 105.6
CANEZ 16701 0.892 102.6
KANTOR 16705 0.997 13.16
SONOITA 16702 0.886 101.9
SONOITA 16712 0.882 101.4
SONOITA1 16707 0.872 11.51
SONOITA2 16708 0.872 11.51
CITIZENS SANTA CRUZ DISTRICT TRANSMISSION PRJ.
2003 HEAVY SUMMER 03HS3SA
SUMMER 2003 BASE SYSTEM
CASE S2-C01B - SYSTEM W/ GATEWAY-VALENCIA LINE
GOMW FROM NOGALES SWITCHYARD & GATEWAY SUB
OUTAGE GATEWAY-VALENCIA LINE

WESTERN SYSTEMS COORDINATING COUNCIL
2003 HS3-SA APPROVED BASE CASE

--From-	--NAME--	--KV--	---To--	--NAME--	--KV--	CK	---P---	---Q---	--MVA--	-AMPS--	-%rate-	-rate--	unit	-Af	-At	-Ar	-Zf	-Zt	-Zo	-Plos
16703	VALENCIA	115.00	16709	VALNCIA1	13.20	1	14.2	4.6	14.9	85.9	74.6	20.0	Mva	14	14	14	10	10	10	-0.
16703	VALENCIA	115.00	16710	VALNCIA2	13.20	1	14.2	4.6	14.9	85.9	74.6	20.0	Mva	14	14	14	10	10	10	-0.
16703	VALENCIA	115.00	16712	SONOITA	115.00	1	-28.4	-9.2	29.8	171.9	50.6	340.0	Amp	14	14	14	10	10	10	0.
16700	KANTOR	115.00	19221	NOGALES	115.00	1	-58.0	-19.2	61.1	334.2	50.4	662.7	Amp	14	14	14	10	10	10	1.
16101	GREENLEE	345.00	16104	SPRINGR	345.00	1	-361.9	53.4	365.8	587.0	48.0	1246.7	Amp	14	14	14	10	160	160	6.
16701	CANEZ	115.00	16706	CANEZ	13.20	1	5.7	1.5	5.9	33.1	47.0	12.5	Mva	14	14	14	10	10	10	0.
16700	KANTOR	115.00	16705	KANTOR	13.20	1	5.7	1.5	5.9	32.1	46.9	12.5	Mva	14	14	14	10	10	10	-0.
16700	KANTOR	115.00	16701	CANEZ	115.00	1	52.4	17.8	55.3	302.2	45.8	662.7	Amp	14	14	14	10	10	10	0.
16702	SONOITA	115.00	16708	SONOITA2	13.20	1	8.5	2.3	8.8	50.0	44.1	20.0	Mva	14	14	14	10	10	10	-0.
16702	SONOITA	115.00	16707	SONOITA1	13.20	1	8.5	2.3	8.8	50.0	44.1	20.0	Mva	14	14	14	10	10	10	-0.
16701	CANEZ	115.00	16702	SONOITA	115.00	1	45.9	14.2	48.1	270.5	40.9	662.7	Amp	14	14	14	10	10	10	0.
14350	ADAMS	115.00	19221	NOGALES	115.00	1	62.4	-0.9	62.4	314.4	39.1	803.3	Amp	14	14	14	10	10	140	1.
16103	SOUTH	345.00	16306	SO.3WP2	100.00	1	242.5	28.5	244.1	388.3	36.4	672.0	Mva	14	14	14	10	160	160	0.
16105	VAIL	345.00	16308	VAIL.3WP	100.00	1	166.7	82.2	185.8	296.6	27.9	672.0	Mva	14	14	14	10	160	160	0.
19047	DEL BAC	115.00	19221	NOGALES	115.00	1	-0.8	30.9	30.9	155.2	26.4	602.5	Amp	14	14	14	10	10	140	0.
16702	SONOITA	115.00	16712	SONOITA	115.00	1	28.7	9.3	30.2	171.0	25.9	662.7	Amp	14	14	14	10	10	10	0.
16101	GREENLEE	345.00	16105	VAIL	345.00	1	221.2	-69.8	231.9	372.2	24.8	1499.4	Amp	14	14	14	10	10	160	2.
16103	SOUTH	345.00	16107	WESTWING	345.00	1	-73.3	30.0	79.2	126.0	20.7	1124.6	Amp	14	14	14	10	160	160	0.
16103	SOUTH	345.00	16105	VAIL	345.00	1	-169.2	68.8	182.7	290.6	19.3	1548.0	Amp	14	14	14	10	10	160	0.
19047	DEL BAC	115.00	19064	TUCSON	115.00	1	-2.9	-21.7	21.9	109.9	18.2	602.5	Amp	14	14	14	10	191	191	0.
16105	VAIL	345.00	17005	BICKNELL	345.00	1	-117.6	31.3	121.7	194.2	15.1	1365.1	Amp	14	14	14	10	10	170	0.
16101	GREENLEE	345.00	17010	GREEN-AE	345.00	1	-87.9	20.9	90.4	145.0	10.7	1365.1	Amp	14	14	14	10	170	170	0.
19047	DEL BAC	115.00	19201	BLACKMTN	115.00	1	3.7	-9.2	9.9	49.9	8.3	602.5	Amp	14	14	14	10	140	140	0.
16103	SOUTH	345.00	16108	GATEWAY	345.00	1	0.0	-63.6	63.6	101.2	6.5	1548.0	Amp	14	14	4	10	10	160	0.
16103	SOUTH	345.00	16108	GATEWAY	345.00	2	0.0	-63.6	63.6	101.2	6.5	1548.0	Amp	14	14	4	10	10	160	0.
16313	GW.3WP	100.00	16704	GATEWAY	115.00	1	0.0	0.0	0.0	0.0	0.0	100.0	Mva	14	14	14	10	10	161	-0.
16108	GATEWAY	345.00	16313	GW.3WP	100.00	1	0.0	0.0	0.0	0.0	0.0	100.0	Mva	14	14	14	10	10	161	-0.
14350	ADAMS	115.00	17001	APACHE	115.00	1	-93.8	-8.5	94.2	474.5	0.0	0.0	Amp	14	14	14	10	170	191	1.
16313	GW.3WP	100.00	16711	GATEWAY	15.00	1	0.0	0.0	0.0	0.0	0.0	100.0	Mva	14	14	14	10	10	161	0.

WESTERN SYSTEMS COORDINATING COUNCIL
2003 HS3-SA APPROVED BASE CASE

Zone	Zone_name	Loss_mw
10	SANTA CRUZ	9.21

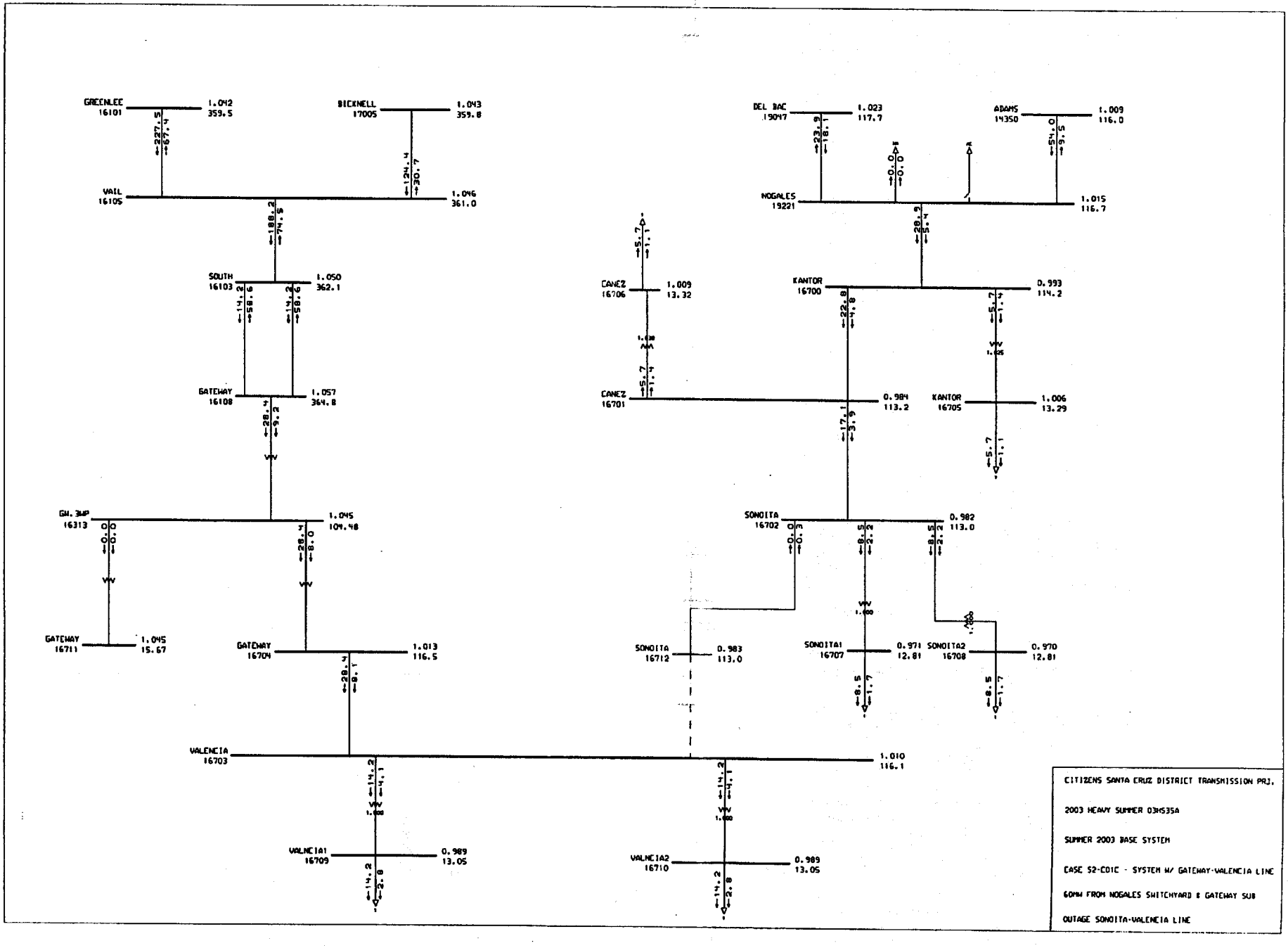
GREENLEE 16101 1.042 359.5
BICKNELL 17005 1.043 359.8
VAIL 16105 1.046 361.0
SOUTH 16103 1.050 362.1
GATEWAY 16108 1.057 364.8
GW.3WP 16313 1.045 104.48
GATEWAY 16711 1.045 15.67
GATEWAY 16704 1.013 116.5
VALENCIA 16703 1.010 116.1
VALNCIA1 16709 0.989 13.05
VALNCIA2 16710 0.989 13.05
DEL BAC 19047 1.023 117.7
ADAMS 14350 1.009 116.0
NOGALES 19221 1.015 116.7
CANEZ 16706 1.009 13.32
KANTOR 16700 0.993 114.2
CANEZ 16701 0.984 113.2
KANTOR 16705 1.006 13.29
SONOITA 16702 0.982 113.0
SONOITA 16712 0.983 113.0
SONOITA1 16707 0.971 12.81
SONOITA2 16708 0.970 12.81
CITIZENS SANTA CRUZ DISTRICT TRANSMISSION PRJ.
2003 HEAVY SUMMER 03HS35A
SUMMER 2003 BASE SYSTEM
CASE S2-COIC - SYSTEM W/ GATEWAY-VALENCIA LINE
60MW FROM NOGALES SWITCHYARD & GATEWAY SUB
OUTAGE SONOITA-VALENCIA LINE

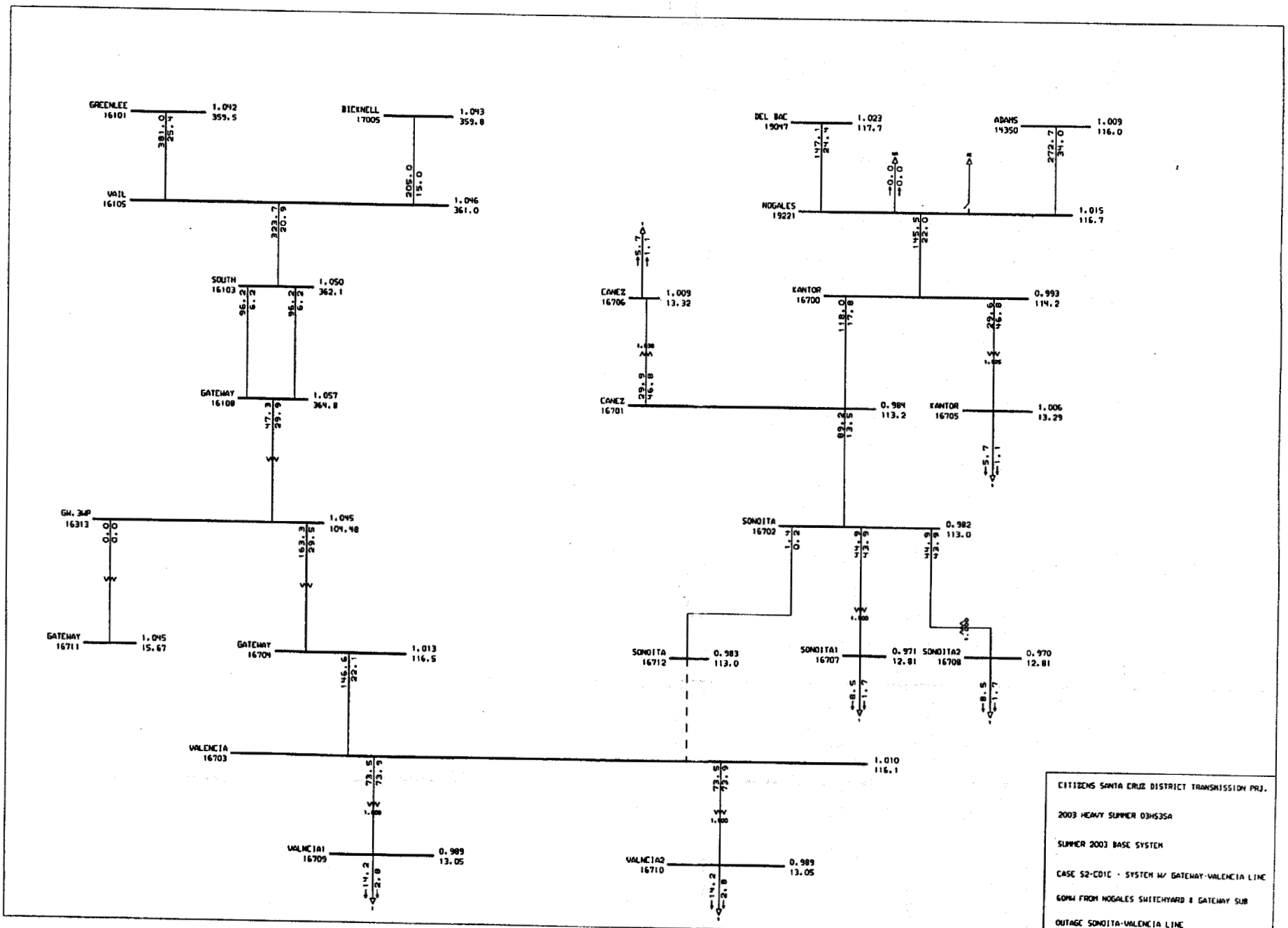
GREENLEE 16101 1.042 359.5
BICKNELL 17005 1.043 359.8
VAIL 16105 1.046 361.0
SOUTH 16103 1.050 362.1
GATEWAY 16108 1.057 364.8
GW. 34P 16313 1.045 104.48
GATEWAY 16711 1.045 15.67
GATEWAY 16704 1.013 116.5
VALENCIA 16703 1.010 116.1
VALNCIA1 16709 0.989 13.05
VALNCIA2 16710 0.989 13.05
DEL BAC 19047 1.023 117.7
ADAMS 19350 1.009 116.0
NOGALES 19221 1.015 116.7
CANEZ 16706 1.009 13.32
CANEZ 16701 0.984 113.2
KANTOR 16700 0.993 114.2
KANTOR 16705 1.006 13.29
SONOITA 16702 0.982 113.0
SONOITA 16712 0.983 113.0
SONOITA1 16707 0.971 12.81
SONOITA2 16708 0.970 12.81
CITIZENS SANTA CRUZ DISTRICT TRANSMISSION PRJ.
2003 HEAVY SUMMER 03HS3SA
SUMMER 2003 BASE SYSTEM
CASE S2-C01C - SYSTEM W/ GATEWAY-VALENCIA LINE
60MW FROM NOGALES SWITCHYARD & GATEWAY SUB
OUTAGE SONOITA-VALENCIA LINE

WESTERN SYSTEMS COORDINATING COUNCIL
2003 HS3-SA APPROVED BASE CASE

--From-	--NAME--	--KV--	---To--	--NAME--	--KV--	CK	---P---	---Q---	--MVA--	-AMPS--	-%rate-	-rate--	unit	-Af	-At	-Ar	-Zf	-Zt	-Zo	-Ploss
16703	VALENCIA	115.00	16709	VALNCIA1	13.20	1	14.2	4.1	14.8	73.5	73.9	20.0	Mva	14	14	14	10	10	10	0.0
16703	VALENCIA	115.00	16710	VALNCIA2	13.20	1	14.2	4.1	14.8	73.5	73.9	20.0	Mva	14	14	14	10	10	10	-0.0
16101	GREENLEE	345.00	16104	SPRINGR	345.00	1	-363.3	51.7	367.0	589.4	48.1	1246.7	Amp	14	14	14	10	160	160	6.4
16701	CANEZ	115.00	16706	CANEZ	13.20	1	5.7	1.4	5.9	29.9	46.8	12.5	Mva	14	14	14	10	10	10	-0.0
16700	KANTOR	115.00	16705	KANTOR	13.20	1	5.7	1.4	5.9	29.6	46.8	12.5	Mva	14	14	14	10	10	10	-0.0
16702	SONOITA	115.00	16708	SONOITA2	13.20	1	8.5	2.2	8.8	44.9	43.9	20.0	Mva	14	14	14	10	10	10	0.0
16702	SONOITA	115.00	16707	SONOITA1	13.20	1	8.5	2.2	8.8	44.9	43.9	20.0	Mva	14	14	14	10	10	10	-0.0
16103	SOUTH	345.00	16306	SO.3WP2	100.00	1	237.6	25.8	239.0	381.1	35.6	672.0	Mva	14	14	14	10	160	160	0.1
14350	ADAMS	115.00	19221	NOGALES	115.00	1	54.0	-9.5	54.8	272.7	34.0	803.3	Amp	14	14	14	10	10	140	1.1
16108	GATEWAY	345.00	16313	GW.3WP	100.00	1	28.4	9.2	29.9	47.3	29.9	100.0	Mva	14	14	14	10	10	161	-0.0
16313	GW.3WP	100.00	16704	GATEWAY	115.00	1	28.4	8.0	29.5	163.3	29.6	100.0	Mva	14	14	14	10	10	161	-0.0
16105	VAIL	345.00	16308	VAIL.3WP	100.00	1	160.9	77.9	178.7	285.9	26.8	672.0	Mva	14	14	14	10	160	160	0.0
16101	GREENLEE	345.00	16105	VAIL	345.00	1	227.5	-67.4	237.2	381.0	25.4	1499.4	Amp	14	14	14	10	10	160	2.8
19047	DEL BAC	115.00	19221	NOGALES	115.00	1	-23.9	18.1	30.0	147.1	24.8	602.5	Amp	14	14	14	10	10	140	0.0
16700	KANTOR	115.00	19221	NOGALES	115.00	1	-28.5	-6.2	29.2	147.6	22.3	662.7	Amp	14	14	14	10	10	10	0.3
16703	VALENCIA	115.00	16704	GATEWAY	115.00	1	-28.4	-8.2	29.6	146.9	22.2	662.7	Amp	14	14	14	10	10	10	0.0
16103	SOUTH	345.00	16105	VAIL	345.00	1	-187.9	63.4	198.3	316.2	20.9	1548.0	Amp	14	14	14	10	10	160	0.2
16103	SOUTH	345.00	16107	WESTWING	345.00	1	-78.2	28.0	83.0	132.4	20.8	1124.6	Amp	14	14	14	10	160	160	0.5
16700	KANTOR	115.00	16701	CANEZ	115.00	1	22.8	4.8	23.3	118.0	18.0	662.7	Amp	14	14	14	10	10	10	0.1
16105	VAIL	345.00	17005	BICKNELL	345.00	1	-124.4	30.7	128.2	205.0	15.8	1365.1	Amp	14	14	14	10	10	170	0.1
19047	DEL BAC	115.00	19064	TUCSON	115.00	1	12.6	-13.3	18.3	89.9	14.9	602.5	Amp	14	14	14	10	191	191	0.0
16701	CANEZ	115.00	16702	SONOITA	115.00	1	17.1	3.9	17.5	89.2	13.5	662.7	Amp	14	14	14	10	10	10	0.0
16101	GREENLEE	345.00	17010	GREEN-AE	345.00	1	-91.6	21.3	94.0	151.0	11.1	1365.1	Amp	14	14	14	10	170	170	0.0
19047	DEL BAC	115.00	19201	BLACKMTN	115.00	1	11.2	-4.8	12.2	60.0	10.0	602.5	Amp	14	14	14	10	140	140	0.0
16103	SOUTH	345.00	16108	GATEWAY	345.00	2	14.2	-58.6	60.3	96.2	6.2	1548.0	Amp	14	14	4	10	10	160	0.0
16103	SOUTH	345.00	16108	GATEWAY	345.00	1	14.2	-58.6	60.3	96.2	6.2	1548.0	Amp	14	14	4	10	10	160	0.0
16702	SONOITA	115.00	16712	SONOITA	115.00	1	-0.0	-0.3	0.3	1.4	0.2	662.7	Amp	14	14	14	10	10	10	0.0
16313	GW.3WP	100.00	16711	GATEWAY	15.00	1	0.0	0.0	0.0	0.0	0.0	100.0	Mva	14	14	14	10	10	161	0.0
14350	ADAMS	115.00	17001	APACHE	115.00	1	-85.4	0.1	85.4	424.8	0.0	0.0	Amp	14	14	14	10	170	191	1.1

WESTERN SYSTEMS COORDINATING COUNCIL
2003 HS3-SA APPROVED BASE CASE

Zone	Zone_name	Loss_mw
10	SANTA CRUZ	6.12

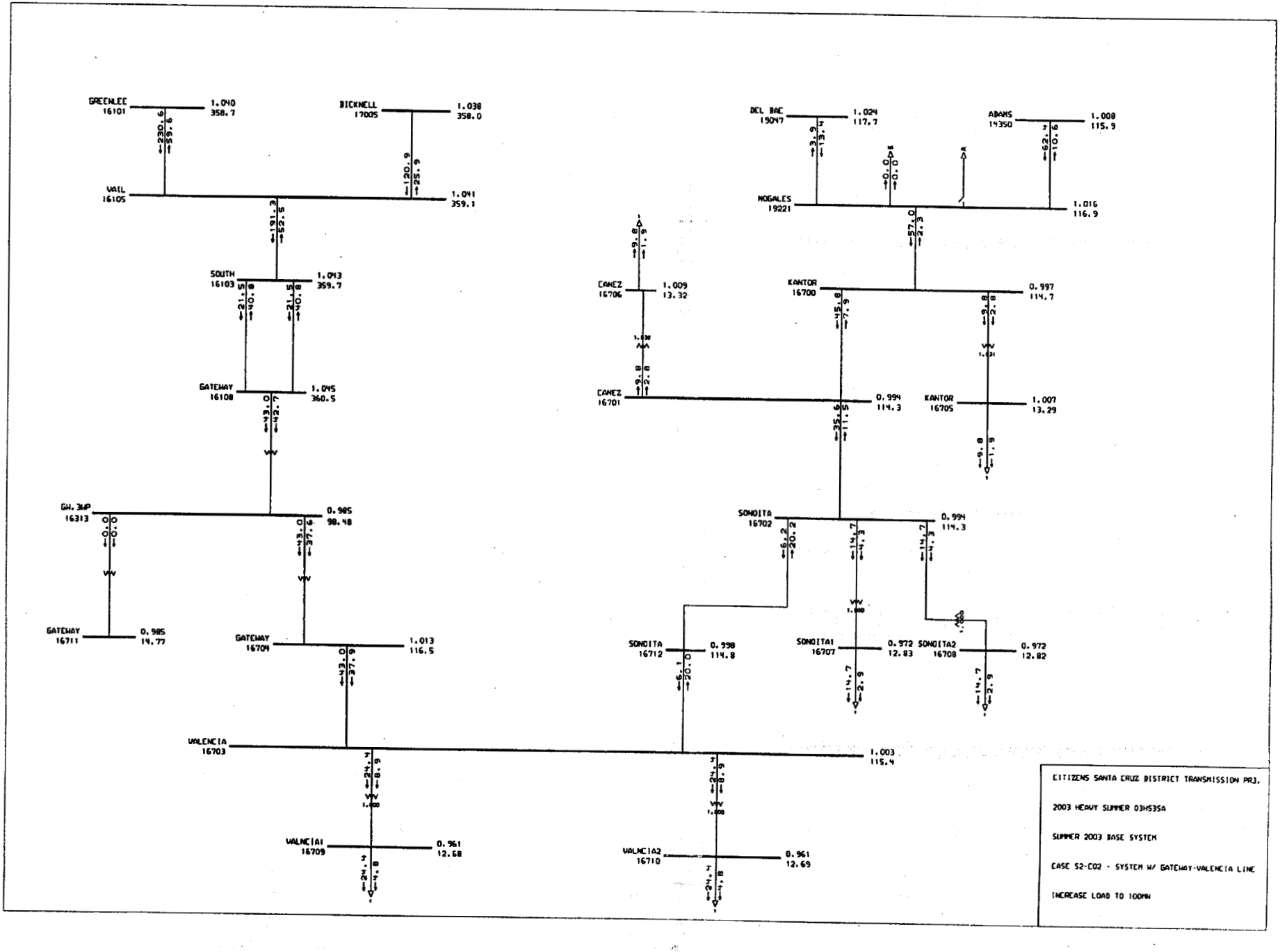
GREENLEE 16101 1.040 358.7
BICKNELL 17005 1.038 358.0
VAIL 16105 1.041 359.1
SOUTH 16103 1.043 359.7
GATEWAY 16108 1.045 360.5
GW.3WP 16313 0.985 98.48
GATEWAY 16711 0.985 14.77
GATEWAY 16704 1.013 116.5
VALENCIA 16703 1.003 115.4
VALNCIA1 16709 0.961 12.68
VALNCIA2 16710 0.961 12.69
DEL BAC 19047 1.024 117.7
ADAMS 14350 1.008 115.9
NOGALES 19221 1.016 116.9
CANEZ 16706 1.009 13.32
CANEZ 16701 0.994 114.3
KANTOR 16700 0.997 114.7
KANTOR 16705 1.007 13.29
SONOITA 16702 0.994 114.3
SONOITA 16712 0.998 114.8
SONOITA1 16707 0.972 12.83
SONOITA2 16708 0.972 12.82
CITIZENS SANTA CRUZ DISTRICT TRANSMISSION PRJ.
2003 HEAVY SUMMER 03HS35A
SUMMER 2003 BASE SYSTEM
CASE S2-C02 - SYSTEM W/ GATEWAY-VALENCIA LINE
INCREASE LOAD TO 100MW

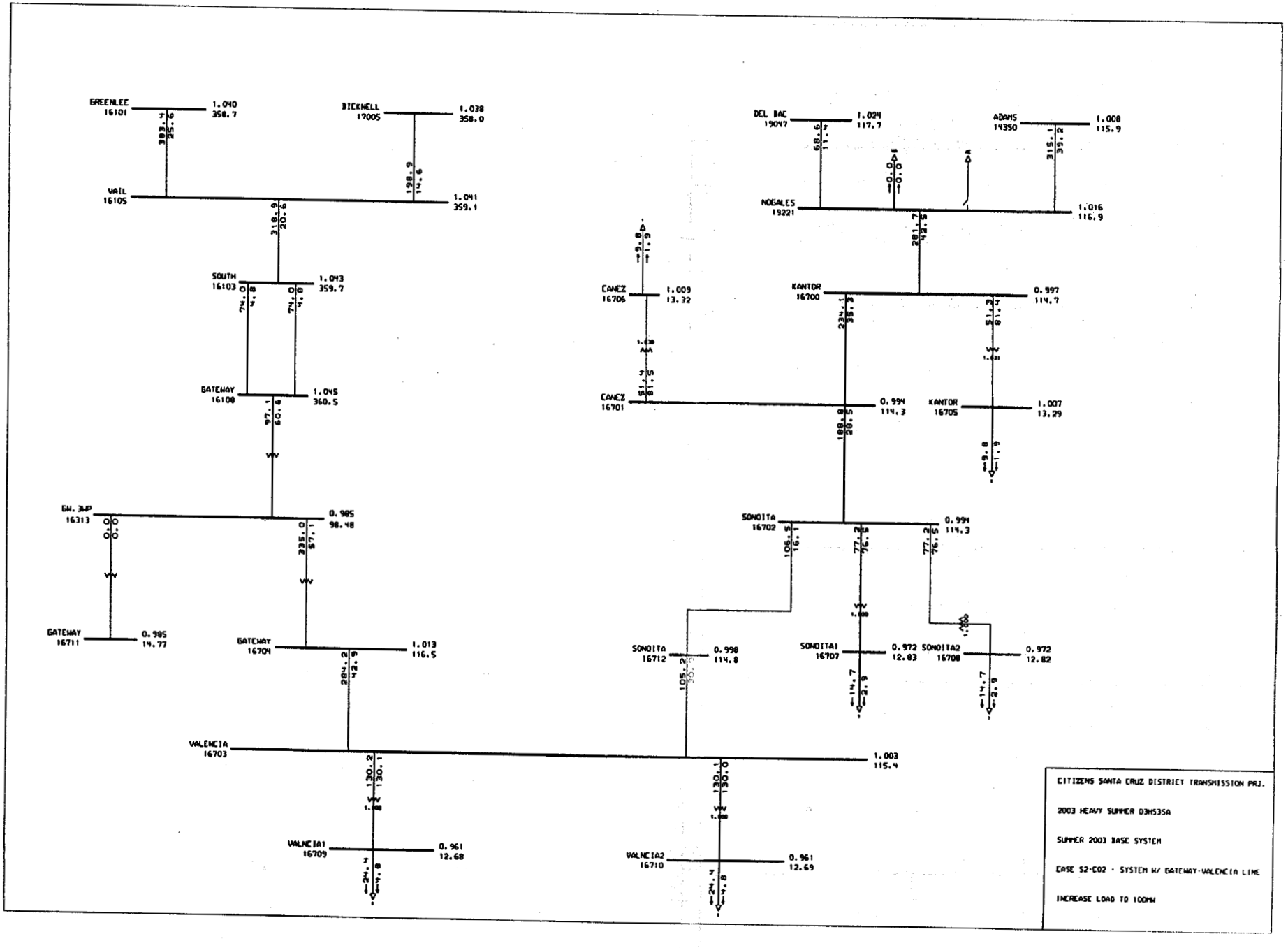
GREENLEE 16101 1.040 358.7
BICKNELL 17005 1.038 358.0
VAIL 16105 1.041 359.1
SOUTH 16103 1.043 359.7
GATEWAY 16108 1.045 360.5
GW. 34P 16313 0.985 98.48
GATEWAY 16711 0.985 14.77
GATEWAY 16704 1.013 116.5
VALENCIA 16703 1.003 115.4
VALNCIA1 16709 0.961 12.68
VALNCIA2 16710 0.961 12.69
DEL BAC 19047 1.024 117.7
ADAMS 14350 1.008 115.9
NOGALES 19221 1.016 116.9
CANEZ 16706 1.009 13.32
KANTOR 16700 0.997 114.7
CANEZ 16701 0.994 114.3
KANTOR 16705 1.007 13.29
SONOITA 16702 0.994 114.3
SONOITA 16712 0.998 114.8
SONOITA1 16707 0.972 12.83
SONOITA2 16708 0.972 12.82
CITIZENS SANTA CRUZ DISTRICT TRANSMISSION PRJ.
2003 HEAVY SUMMER D3HS35A
SUMMER 2003 BASE SYSTEM
CASE S2-C02 - SYSTEM W/ GATEWAY-VALENCIA LINE
INCREASE LOAD TO 100MW

WESTERN SYSTEMS COORDINATING COUNCIL
2003 HS3-SA APPROVED BASE CASE

--From-	--NAME--	--KV--	---To--	--NAME--	--KV--	CK	---P---	---Q---	--MVA--	-AMPS--	-%rate-	-rate--	unit	-Af	-At	-Ar	-Zf	-Zt	-Zo	-Ploss
16703	VALENCIA	115.00	16709	VALNCIA1	13.20	1	24.4	8.9	26.0	130.2	130.1	20.0	Mva	14	14	14	10	10	10	-0.0
16703	VALENCIA	115.00	16710	VALNCIA2	13.20	1	24.4	8.9	26.0	130.1	130.0	20.0	Mva	14	14	14	10	10	10	0.0
16701	CANEZ	115.00	16706	CANEZ	13.20	1	9.8	2.8	10.2	51.4	81.5	12.5	Mva	14	14	14	10	10	10	0.0
16700	KANTOR	115.00	16705	KANTOR	13.20	1	9.8	2.8	10.2	51.3	81.4	12.5	Mva	14	14	14	10	10	10	0.0
16702	SONOITA	115.00	16708	SONOITA2	13.20	1	14.7	4.3	15.3	77.3	76.5	20.0	Mva	14	14	14	10	10	10	0.0
16702	SONOITA	115.00	16707	SONOITA1	13.20	1	14.7	4.3	15.3	77.2	76.5	20.0	Mva	14	14	14	10	10	10	-0.0
16108	GATEWAY	345.00	16313	GW.3WP	100.00	1	43.0	42.7	60.6	97.1	60.6	100.0	Mva	14	14	14	10	10	161	-0.0
16313	GW.3WP	100.00	16704	GATEWAY	115.00	1	43.0	37.6	57.1	335.0	57.4	100.0	Mva	14	14	14	10	10	161	-0.0
16101	GREENLEE	345.00	16104	SPRINGR	345.00	1	-368.4	48.6	371.6	598.1	48.8	1246.7	Amp	14	14	14	10	160	160	6.6
16703	VALENCIA	115.00	16704	GATEWAY	115.00	1	-42.8	-37.6	57.0	285.1	43.0	662.7	Amp	14	14	14	10	10	10	0.1
16700	KANTOR	115.00	19221	NOGALES	115.00	1	-55.6	5.1	55.8	281.1	42.5	662.7	Amp	14	14	14	10	10	10	1.3
14350	ADAMS	115.00	19221	NOGALES	115.00	1	62.4	-10.6	63.3	315.1	39.2	803.3	Amp	14	14	14	10	10	140	1.4
16700	KANTOR	115.00	16701	CANEZ	115.00	1	45.8	-7.9	46.5	234.1	35.3	662.7	Amp	14	14	14	10	10	10	0.4
16103	SOUTH	345.00	16306	SO.3WP2	100.00	1	235.3	18.1	236.0	378.9	35.2	672.0	Mva	14	14	14	10	160	160	0.1
16703	VALENCIA	115.00	16712	SONOITA	115.00	1	-6.0	19.8	20.7	103.5	30.9	340.0	Amp	14	14	14	10	10	10	0.0
16701	CANEZ	115.00	16702	SONOITA	115.00	1	35.6	-11.5	37.4	188.8	28.5	662.7	Amp	14	14	14	10	10	10	0.0
16105	VAIL	345.00	16308	VAIL.3WP	100.00	1	157.3	66.8	171.0	274.9	25.6	672.0	Mva	14	14	14	10	160	160	0.0
16101	GREENLEE	345.00	16105	VAIL	345.00	1	230.6	-59.6	238.2	383.4	25.6	1499.4	Amp	14	14	14	10	10	160	2.9
16103	SOUTH	345.00	16107	WESTWING	345.00	1	-87.3	22.1	90.1	144.6	20.7	1124.6	Amp	14	14	14	10	160	160	0.6
16103	SOUTH	345.00	16105	VAIL	345.00	1	-191.1	41.5	195.5	313.8	20.6	1548.0	Amp	14	14	14	10	10	160	0.2
16702	SONOITA	115.00	16712	SONOITA	115.00	1	6.2	-20.2	21.1	106.5	16.1	662.7	Amp	14	14	14	10	10	10	0.0
16105	VAIL	345.00	17005	BICKNELL	345.00	1	-120.9	25.9	123.7	198.9	15.3	1365.1	Amp	14	14	14	10	10	170	0.1
19047	DEL BAC	115.00	19221	NOGALES	115.00	1	-3.9	13.4	14.0	68.6	12.1	602.5	Amp	14	14	14	10	10	140	0.0
16101	GREENLEE	345.00	17010	GREEN-AE	345.00	1	-87.6	18.9	89.6	144.3	10.6	1365.1	Amp	14	14	14	10	170	170	0.0
19047	DEL BAC	115.00	19064	TUCSON	115.00	1	-0.9	-10.0	10.1	49.5	8.2	602.5	Amp	14	14	14	10	191	191	0.0
16103	SOUTH	345.00	16108	GATEWAY	345.00	2	21.5	-40.8	46.1	74.0	4.8	1548.0	Amp	14	14	4	10	10	160	0.0
16103	SOUTH	345.00	16108	GATEWAY	345.00	1	21.5	-40.8	46.1	74.0	4.8	1548.0	Amp	14	14	4	10	10	160	0.0
19047	DEL BAC	115.00	19201	BLACKMTN	115.00	1	4.8	-3.4	5.8	28.7	4.8	602.5	Amp	14	14	14	10	140	140	0.0
16313	GW.3WP	100.00	16711	GATEWAY	15.00	1	0.0	0.0	0.0	0.0	0.0	100.0	Mva	14	14	14	10	10	161	0.0
14350	ADAMS	115.00	17001	APACHE	115.00	1	-93.8	1.2	93.8	467.1	0.0	0.0	Amp	14	14	14	10	170	191	1.3

WESTERN SYSTEMS COORDINATING COUNCIL
2003 HS3-SA APPROVED BASE CASE

Zone	Zone_name	Loss_mw
10	SANTA CRUZ	8.38

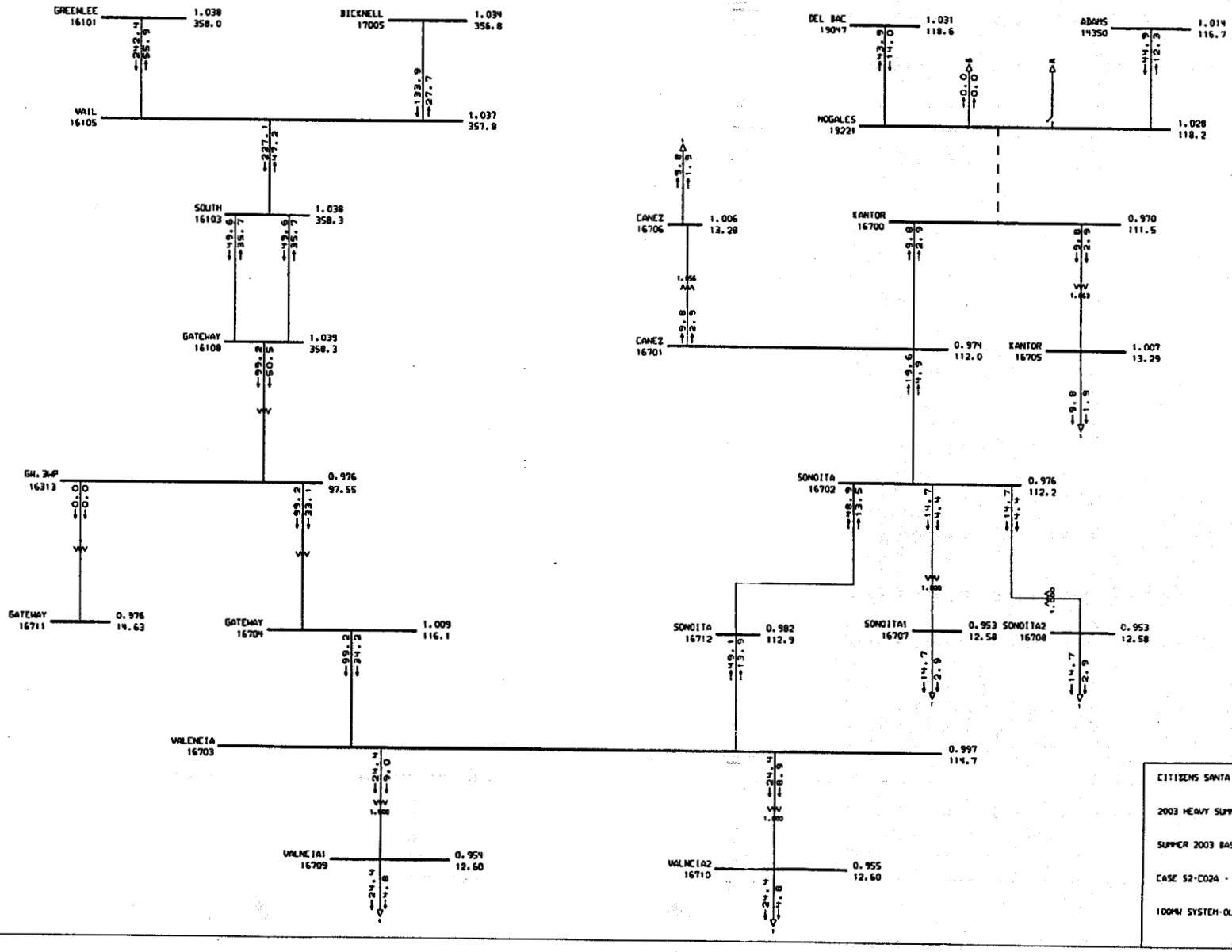

CITIZENS SANTA CRUZ DISTRICT TRANSMISSION PRJ.

2003 HEAVY SUMMER 03HS35A

SUMMER 2003 BASE SYSTEM

CASE S2-C02A - SYSTEM W/ GATEWAY-VALENCIA LINE

100MW SYSTEM-OUTAGE NOGALES SWITCHYARD-KANTOR

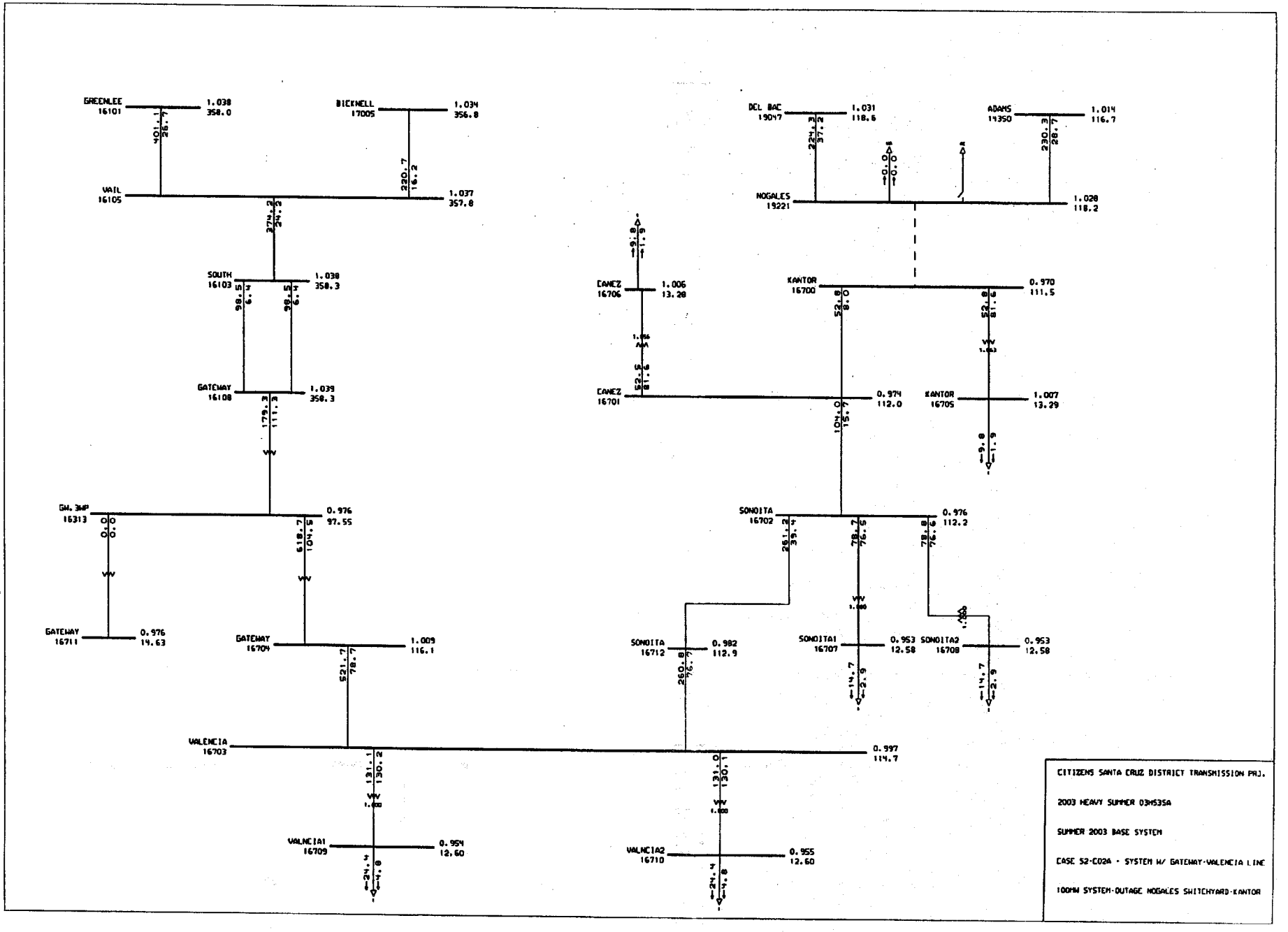
GREENLEE 16101 1.038 358.0
BICKNELL 17005 1.034 356.8
VAIL 16105 1.037 357.8
SOUTH 16103 1.038 358.3
GATEWAY 16108 1.039 358.3
GW. 36P 16313 0.976 97.55
GATEWAY 16711 0.976 14.63
GATEWAY 16704 1.009 116.1
VALENCIA 16703 0.997 114.7
VALNCIA1 16709 0.954 12.60
VALNCIA2 16710 0.955 12.60
DEL BAC 19047 1.031 118.6
ADAMS 14350 1.014 116.7
NOGALES 19221 1.028 118.2
KANTOR 16700 0.970 111.5
CANEZ 16706 1.006 13.28
CANEZ 16701 0.974 112.0
KANTOR 16705 1.007 13.29
SONOITA 16702 0.976 112.2
SONOITA 16712 0.982 112.9
SONOITA1 16707 0.953 12.58
SONOITA2 16708 0.953 12.58
CITIZENS SANTA CRUZ DISTRICT TRANSMISSION PRJ.
2003 HEAVY SUMMER 03HS35A
SUMMER 2003 BASE SYSTEM
CASE S2-C02A - SYSTEM W/ GATEWAY-VALENCIA LINE
100MW SYSTEM-OUTAGE NOGALES SWITCHYARD-KANTOR

WESTERN SYSTEMS COORDINATING COUNCIL
2003 HS3-SA APPROVED BASE CASE

--From-	--NAME--	--KV--	---To--	--NAME--	--KV--	CK	---P---	---Q---	--MVA--	-AMPS--	-%rate-	-rate--	unit	-Af	-At	-Ar	-Zf	-Zt	-Zo	-Ploss
16703	VALENCIA	115.00	16709	VALNCIA1	13.20	1	24.4	9.0	26.0	131.1	130.2	20.0	Mva	14	14	14	10	10	10	0.0
16703	VALENCIA	115.00	16710	VALNCIA2	13.20	1	24.4	8.9	26.0	131.0	130.1	20.0	Mva	14	14	14	10	10	10	0.0
16108	GATEWAY	345.00	16313	GW.3WP	100.00	1	99.2	50.5	111.3	179.3	111.3	100.0	Mva	14	14	14	10	10	161	-0.0
16313	GW.3WP	100.00	16704	GATEWAY	115.00	1	99.2	33.1	104.5	618.7	104.9	100.0	Mva	14	14	14	10	10	161	0.0
16700	KANTOR	115.00	16705	KANTOR	13.20	1	9.8	2.9	10.2	52.8	81.6	12.5	Mva	14	14	14	10	10	10	0.0
16701	CANEZ	115.00	16706	CANEZ	13.20	1	9.8	2.9	10.2	52.5	81.6	12.5	Mva	14	14	14	10	10	10	0.0
16703	VALENCIA	115.00	16704	GATEWAY	115.00	1	-98.6	-32.3	103.7	522.1	78.8	662.7	Amp	14	14	14	10	10	10	0.6
16703	VALENCIA	115.00	16712	SONOITA	115.00	1	49.7	14.4	51.7	260.3	76.7	340.0	Amp	14	14	14	10	10	10	0.5
16702	SONOITA	115.00	16708	SONOITA2	13.20	1	14.7	4.4	15.3	78.8	76.6	20.0	Mva	14	14	14	10	10	10	-0.0
16702	SONOITA	115.00	16707	SONOITA1	13.20	1	14.7	4.4	15.3	78.7	76.5	20.0	Mva	14	14	14	10	10	10	0.0
16101	GREENLEE	345.00	16104	SPRINGR	345.00	1	-372.1	45.8	374.9	604.6	49.2	1246.7	Amp	14	14	14	10	160	160	6.7
16702	SONOITA	115.00	16712	SONOITA	115.00	1	-48.9	-13.5	50.8	261.2	39.4	662.7	Amp	14	14	14	10	10	10	0.1
19047	DEL BAC	115.00	19221	NOGALES	115.00	1	-43.9	14.0	46.1	224.3	37.4	602.5	Amp	14	14	14	10	10	140	0.1
16103	SOUTH	345.00	16306	SO.3WP2	100.00	1	226.1	14.4	226.6	365.2	33.8	672.0	Mva	14	14	14	10	160	160	0.1
14350	ADAMS	115.00	19221	NOGALES	115.00	1	44.9	-12.3	46.5	230.3	28.7	803.3	Amp	14	14	14	10	10	140	0.7
16101	GREENLEE	345.00	16105	VAIL	345.00	1	242.4	-55.9	248.7	401.1	26.7	1499.4	Amp	14	14	14	10	10	160	3.2
16103	SOUTH	345.00	16105	VAIL	345.00	1	-226.7	37.3	229.8	370.3	24.2	1548.0	Amp	14	14	14	10	10	160	0.3
16105	VAIL	345.00	16308	VAIL.3WP	100.00	1	146.0	60.5	158.0	255.0	23.6	672.0	Mva	14	14	14	10	160	160	0.0
19047	DEL BAC	115.00	19064	TUCSON	115.00	1	26.0	-10.7	28.1	136.7	22.7	602.5	Amp	14	14	14	10	191	191	0.0
16103	SOUTH	345.00	16107	WESTWING	345.00	1	-98.7	19.8	100.6	162.2	21.4	1124.6	Amp	14	14	14	10	160	160	0.8
16105	VAIL	345.00	17005	BICKNELL	345.00	1	-133.9	27.7	136.7	220.7	16.8	1365.1	Amp	14	14	14	10	10	170	0.1
16701	CANEZ	115.00	16702	SONOITA	115.00	1	-19.6	-4.9	20.2	104.0	15.7	662.7	Amp	14	14	14	10	10	10	0.0
19047	DEL BAC	115.00	19201	BLACKMTN	115.00	1	17.9	-3.3	18.2	88.7	14.7	602.5	Amp	14	14	14	10	140	140	0.0
16101	GREENLEE	345.00	17010	GREEN-AE	345.00	1	-95.3	19.7	97.3	156.9	11.5	1365.1	Amp	14	14	14	10	170	170	0.0
16700	KANTOR	115.00	16701	CANEZ	115.00	1	-9.8	-2.9	10.2	52.8	8.0	662.7	Amp	14	14	14	10	10	10	0.0
16103	SOUTH	345.00	16108	GATEWAY	345.00	2	49.6	-35.7	61.2	98.6	6.4	1548.0	Amp	14	14	4	10	10	160	0.0
16103	SOUTH	345.00	16108	GATEWAY	345.00	1	49.6	-35.7	61.2	98.6	6.4	1548.0	Amp	14	14	4	10	10	160	0.0
16313	GW.3WP	100.00	16711	GATEWAY	15.00	1	0.0	0.0	0.0	0.0	0.0	100.0	Mva	14	14	14	10	10	161	0.0
14350	ADAMS	115.00	17001	APACHE	115.00	1	-76.3	2.9	76.3	377.8	0.0	0.0	Amp	14	14	14	10	170	191	0.8

WESTERN SYSTEMS COORDINATING COUNCIL
2003 HS3-SA APPROVED BASE CASE

Zone	Zone_name	Loss_mw
10	SANTA CRUZ	7.09

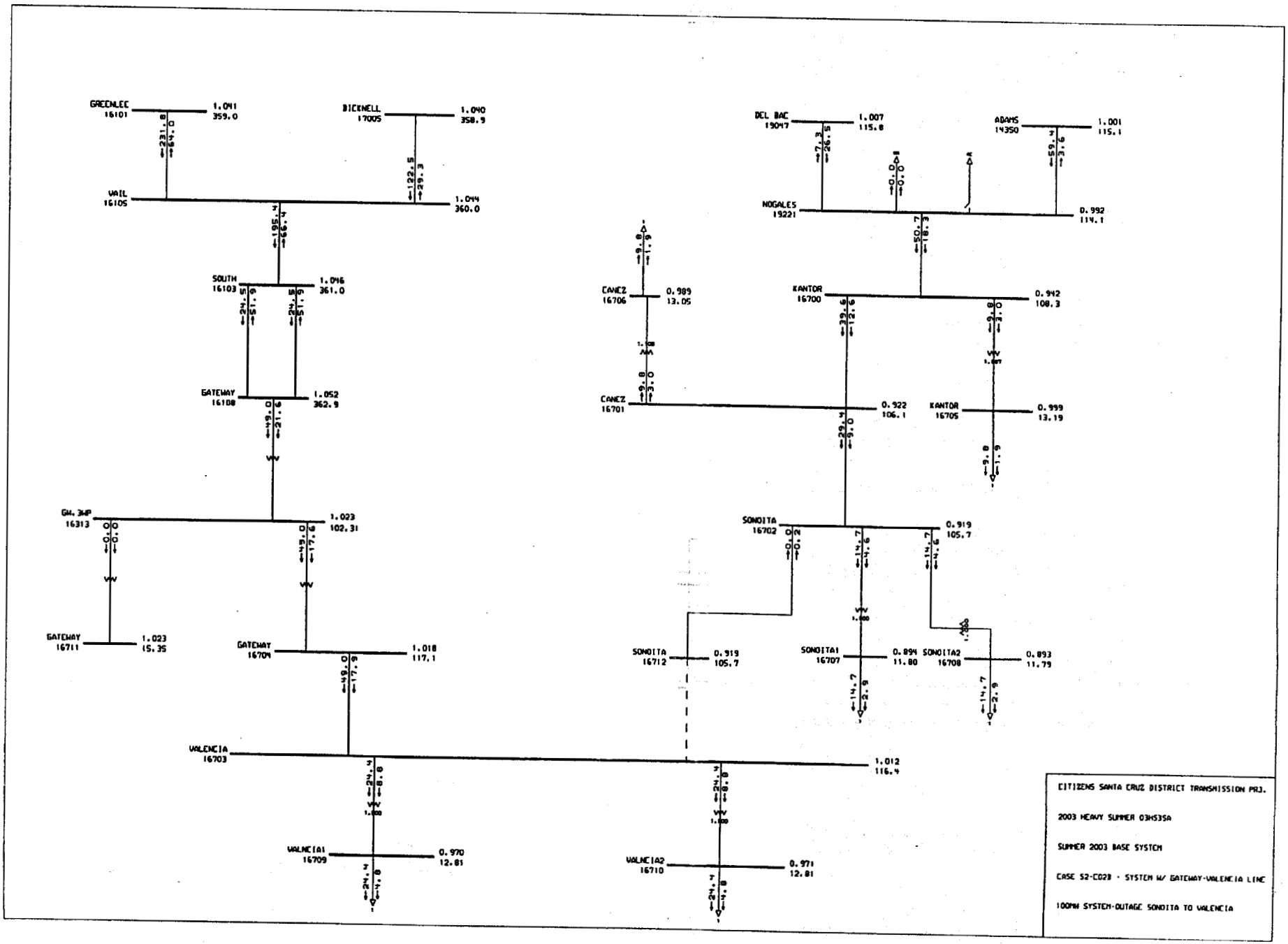
GREENLEE 16101 1.041 359.0
BICKNELL 17005 1.040 358.9
VAIL 16105 1.044 360.0
SOUTH 16103 1.046 361.0
GATEWAY 16108 1.052 362.9
GW. 34P 16313 1.023 102.31
GATEWAY 16711 1.023 15.35
GATEWAY 16704 1.018 117.1
VALENCIA 16703 1.012 116.4
VALNCIA1 16709 0.970 12.81
VALNCIA2 16710 0.971 12.81
DEL BAC 19047 1.007 115.8
ADAMS 14350 1.001 115.1
NOGALES 19221 0.992 114.1
CANEZ 16706 0.989 13.05
KANTOR 16700 0.942 108.3
CANEZ 16701 0.922 106.1
KANTOR 16705 0.999 13.19
SONOITA 16702 0.919 105.7
SONOITA 16712 0.919 105.7
SONOITA1 16707 0.894 11.80
SONOITA2 16708 0.893 11.79
CITIZENS SANTA CRUZ DISTRICT TRANSMISSION PRJ.
2003 HEAVY SUMMER 03HS35A
SUMMER 2003 BASE SYSTEM
CASE S2-C023 - SYSTEM W/ GATEWAY-VALENCIA LINE
100MW SYSTEM-OUTAGE SONOITA TO VALENCIA

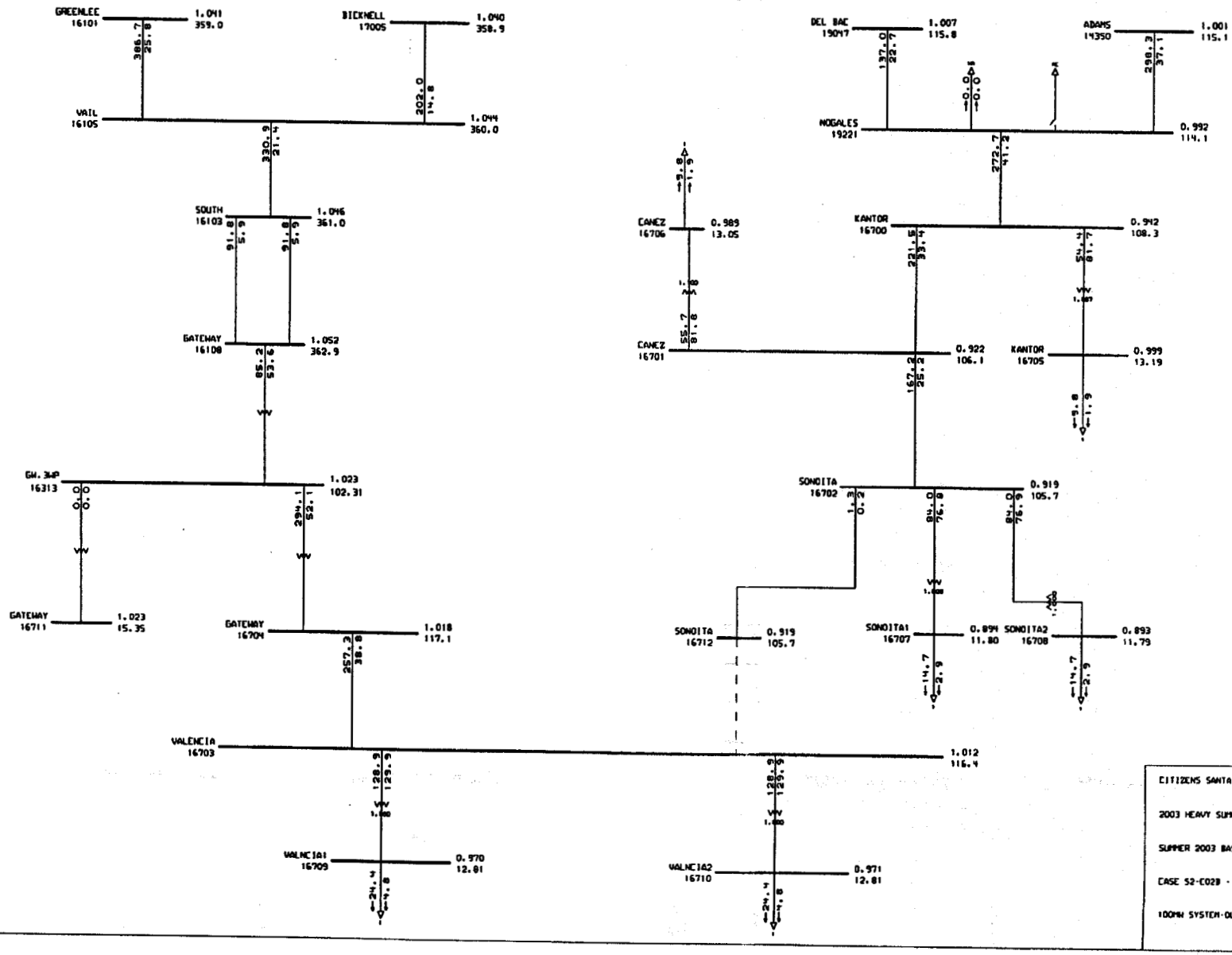

CITIZENS SANTA CRUZ DISTRICT TRANSMISSION PRJ.

2003 HEAVY SUMMER 03HS35A

SUMMER 2003 BASE SYSTEM

CASE S2-C028 - SYSTEM W/ GATEWAY-VALENCIA LINE

100MW SYSTEM-OUTAGE SONOITA TO VALENCIA

WESTERN SYSTEMS COORDINATING COUNCIL
2003 HS3-SA APPROVED BASE CASE

--From-	--NAME--	--KV--	---To--	--NAME--	--KV--	CK	---P---	---Q---	--MVA--	-AMPS--	-%rate-	-rate--	unit	-Af	-At	-Ar	-Zf	-Zt	-Zo	-Ploss
16703	VALENCIA	115.00	16709	VALNCIA1	13.20	1	24.4	8.8	26.0	128.9	129.9	20.0	Mva	14	14	14	10	10	10	0.0
16703	VALENCIA	115.00	16710	VALNCIA2	13.20	1	24.4	8.8	26.0	128.9	129.9	20.0	Mva	14	14	14	10	10	10	0.0
16701	CANEZ	115.00	16706	CANEZ	13.20	1	9.8	3.0	10.2	55.7	81.8	12.5	Mva	14	14	14	10	10	10	-0.0
16700	KANTOR	115.00	16705	KANTOR	13.20	1	9.8	3.0	10.2	54.4	81.7	12.5	Mva	14	14	14	10	10	10	-0.0
16702	SONOITA	115.00	16708	SONOITA2	13.20	1	14.7	4.6	15.4	84.0	76.9	20.0	Mva	14	14	14	10	10	10	-0.0
16702	SONOITA	115.00	16707	SONOITA1	13.20	1	14.7	4.6	15.4	84.0	76.8	20.0	Mva	14	14	14	10	10	10	0.0
16108	GATEWAY	345.00	16313	GW.3WP	100.00	1	49.0	21.6	53.6	85.2	53.6	100.0	Mva	14	14	14	10	10	161	0.0
16313	GW.3WP	100.00	16704	GATEWAY	115.00	1	49.0	17.6	52.1	294.1	52.2	100.0	Mva	14	14	14	10	10	161	0.0
16101	GREENLEE	345.00	16104	SPRINGR	345.00	1	-369.5	51.0	373.0	599.8	48.9	1246.7	Amp	14	14	14	10	160	160	6.6
16700	KANTOR	115.00	19221	NOGALES	115.00	1	-49.4	-15.6	51.8	275.9	41.6	662.7	Amp	14	14	14	10	10	10	1.3
16703	VALENCIA	115.00	16704	GATEWAY	115.00	1	-48.9	-17.6	52.0	257.8	38.9	662.7	Amp	14	14	14	10	10	10	0.1
14350	ADAMS	115.00	19221	NOGALES	115.00	1	59.4	-3.6	59.5	298.3	37.1	803.3	Amp	14	14	14	10	10	140	1.3
16103	SOUTH	345.00	16306	SO.3WP2	100.00	1	234.8	22.1	235.8	377.2	35.2	672.0	Mva	14	14	14	10	160	160	0.1
16700	KANTOR	115.00	16701	CANEZ	115.00	1	39.6	12.6	41.6	221.5	33.6	662.7	Amp	14	14	14	10	10	10	0.4
16105	VAIL	345.00	16308	VAIL.3WP	100.00	1	156.0	73.2	172.3	276.3	25.8	672.0	Mva	14	14	14	10	160	160	0.0
16101	GREENLEE	345.00	16105	VAIL	345.00	1	231.8	-64.0	240.4	386.7	25.8	1499.4	Amp	14	14	14	10	10	160	2.9
16701	CANEZ	115.00	16702	SONOITA	115.00	1	29.4	9.0	30.7	167.3	25.3	662.7	Amp	14	14	14	10	10	10	0.0
19047	DEL BAC	115.00	19221	NOGALES	115.00	1	-7.3	26.5	27.5	137.0	23.4	602.5	Amp	14	14	14	10	10	140	0.0
16103	SOUTH	345.00	16105	VAIL	345.00	1	-195.2	55.5	202.9	324.5	21.4	1548.0	Amp	14	14	14	10	10	160	0.2
16103	SOUTH	345.00	16107	WESTWING	345.00	1	-88.7	26.1	92.5	148.0	21.3	1124.6	Amp	14	14	14	10	160	160	0.7
19047	DEL BAC	115.00	19064	TUCSON	115.00	1	1.3	-18.8	18.8	93.9	15.6	602.5	Amp	14	14	14	10	191	191	0.0
16105	VAIL	345.00	17005	BICKNELL	345.00	1	-122.5	29.3	126.0	202.0	15.6	1365.1	Amp	14	14	14	10	10	170	0.1
16101	GREENLEE	345.00	17010	GREEN-AE	345.00	1	-89.0	19.8	91.1	146.6	10.8	1365.1	Amp	14	14	14	10	170	170	0.0
19047	DEL BAC	115.00	19201	BLACKMTN	115.00	1	5.9	-7.7	9.7	48.5	8.1	602.5	Amp	14	14	14	10	140	140	0.0
16103	SOUTH	345.00	16108	GATEWAY	345.00	1	24.5	-51.9	57.4	91.8	5.9	1548.0	Amp	14	14	4	10	10	160	0.0
16103	SOUTH	345.00	16108	GATEWAY	345.00	2	24.5	-51.9	57.4	91.8	5.9	1548.0	Amp	14	14	4	10	10	160	0.0
16702	SONOITA	115.00	16712	SONOITA	115.00	1	-0.0	-0.2	0.2	1.3	0.2	662.7	Amp	14	14	14	10	10	10	0.0
16313	GW.3WP	100.00	16711	GATEWAY	15.00	1	0.0	0.0	0.0	0.0	0.0	100.0	Mva	14	14	14	10	10	161	0.0
14350	ADAMS	115.00	17001	APACHE	115.00	1	-90.8	-5.8	90.9	456.3	0.0	0.0	Amp	14	14	14	10	170	191	1.2

WESTERN SYSTEMS COORDINATING COUNCIL
2003 HS3-SA APPROVED BASE CASE

Zone	Zone_name	Loss_mw
10	SANTA CRUZ	8.02

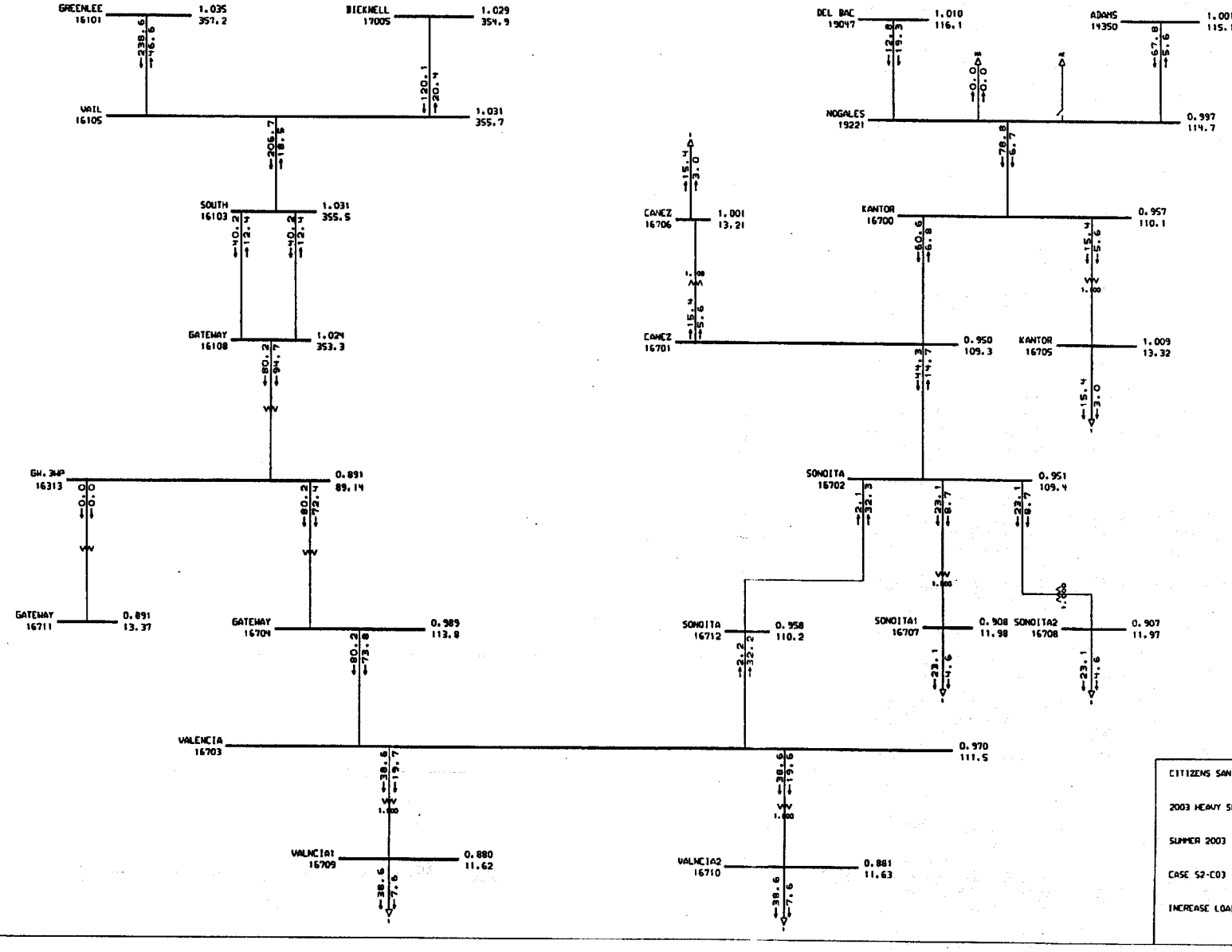

CITIZENS SANTA CRUZ DISTRICT TRANSMISSION PRJ.

2003 HEAVY SUMMER 03HS35A

SUMMER 2003 BASE SYSTEM

CASE S2-C03 - SYSTEM W/ GATEWAY-VALENCIA LINE

INCREASE LOAD UNTIL VOLTAGE IS 0.95pu

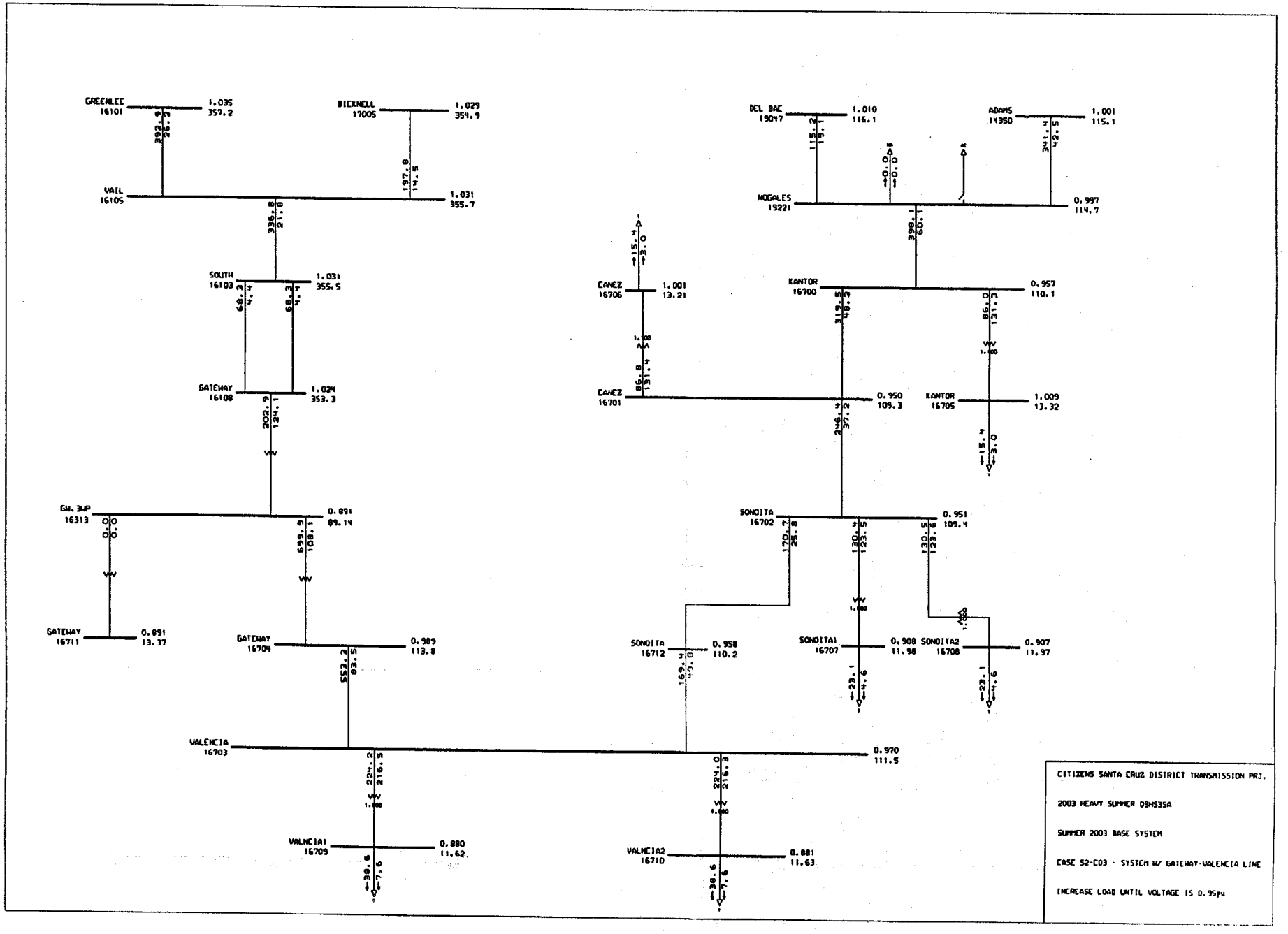
GREENLEE 16101 1.035 357.2
BICKNELL 17005 1.029 354.9
VAIL 16105 1.031 355.7
SOUTH 16103 1.031 355.5
GATEWAY 16108 1.024 353.3
GW.34P 16313 0.891 89.14
GATEWAY 16711 0.891 13.37
GATEWAY 16704 0.989 113.8
VALENCIA 16703 0.970 111.5
VALNCIA1 16709 0.880 11.62
VALNCIA2 16710 0.881 11.63
DEL BAC 19047 1.010 116.1
ADAMS 14350 1.001 115.1
NOGALES 19221 0.997 114.7
CANEZ 16706 1.001 13.21
CANEZ 16701 0.950 109.3
KANTOR 16700 0.957 110.1
KANTOR 16705 1.009 13.32
SONOITA 16702 0.951 109.4
SONOITA 16712 0.958 110.2
SONOITA1 16707 0.908 11.58
SONOITA2 16708 0.907 11.97
CITIZENS SANTA CRUZ DISTRICT TRANSMISSION PRJ.
2003 HEAVY SUMMER 03HS35A
SUMMER 2003 BASE SYSTEM
CASE S2-C03 - SYSTEM W/ GATEWAY-VALENCIA LINE
INCREASE LOAD UNTIL VOLTAGE IS 0.95pu

WESTERN SYSTEMS COORDINATING COUNCIL
2003 HS3-SA APPROVED BASE CASE

--From-	--NAME--	--KV--	---To--	--NAME--	--KV--	CK	---P---	---Q---	--MVA--	-AMPS--	-%rate-	-rate--	unit	-Af	-At	-Ar	-Zf	-Zt	-Zo	-Ploss
16703	VALENCIA	115.00	16709	VALNCIA1	13.20	1	38.6	19.7	43.3	224.2	216.5	20.0	Mva	14	14	14	10	10	10	0.0
16703	VALENCIA	115.00	16710	VALNCIA2	13.20	1	38.6	19.6	43.3	224.0	216.3	20.0	Mva	14	14	14	10	10	10	-0.0
16701	CANEZ	115.00	16706	CANEZ	13.20	1	15.4	5.6	16.4	86.8	131.4	12.5	Mva	14	14	14	10	10	10	-0.0
16700	KANTOR	115.00	16705	KANTOR	13.20	1	15.4	5.6	16.4	86.0	131.3	12.5	Mva	14	14	14	10	10	10	0.0
16108	GATEWAY	345.00	16313	GW.3WP	100.00	1	80.2	94.7	124.1	202.9	124.1	100.0	Mva	14	14	14	10	10	161	0.0
16702	SONOITA	115.00	16708	SONOITA2	13.20	1	23.1	8.7	24.7	130.5	123.6	20.0	Mva	14	14	14	10	10	10	-0.0
16702	SONOITA	115.00	16707	SONOITA1	13.20	1	23.1	8.7	24.7	130.4	123.5	20.0	Mva	14	14	14	10	10	10	0.0
16313	GW.3WP	100.00	16704	GATEWAY	115.00	1	80.2	72.4	108.1	699.9	109.0	100.0	Mva	14	14	14	10	10	161	0.0
16703	VALENCIA	115.00	16704	GATEWAY	115.00	1	-79.5	-71.6	107.1	554.2	83.6	662.7	Amp	14	14	14	10	10	10	0.6
16700	KANTOR	115.00	19221	NOGALES	115.00	1	-76.0	1.2	76.0	398.5	60.1	662.7	Amp	14	14	14	10	10	10	2.7
16101	GREENLEE	345.00	16104	SPRINGR	345.00	1	-377.4	42.9	379.9	613.9	49.9	1246.7	Amp	14	14	14	10	160	160	6.9
16703	VALENCIA	115.00	16712	SONOITA	115.00	1	2.4	32.3	32.4	167.6	49.8	340.0	Amp	14	14	14	10	10	10	0.2
16700	KANTOR	115.00	16701	CANEZ	115.00	1	60.6	-6.8	60.9	319.6	48.2	662.7	Amp	14	14	14	10	10	10	0.8
14350	ADAMS	115.00	19221	NOGALES	115.00	1	67.8	-5.6	68.1	341.4	42.5	803.3	Amp	14	14	14	10	10	140	1.7
16701	CANEZ	115.00	16702	SONOITA	115.00	1	44.3	-14.7	46.6	246.4	37.2	662.7	Amp	14	14	14	10	10	10	0.1
16103	SOUTH	345.00	16306	SO.3WP2	100.00	1	229.2	4.4	229.3	372.3	34.1	672.0	Mva	14	14	14	10	160	160	0.1
16101	GREENLEE	345.00	16105	VAIL	345.00	1	238.6	-46.6	243.1	392.9	26.2	1499.4	Amp	14	14	14	10	10	160	3.1
16702	SONOITA	115.00	16712	SONOITA	115.00	1	-2.1	-32.3	32.3	170.7	25.8	662.7	Amp	14	14	14	10	10	10	0.0
16105	VAIL	345.00	16308	VAIL.3WP	100.00	1	148.9	47.9	156.4	253.8	23.4	672.0	Mva	14	14	14	10	160	160	0.0
16103	SOUTH	345.00	16105	VAIL	345.00	1	-206.4	8.1	206.6	335.5	21.8	1548.0	Amp	14	14	14	10	10	160	0.2
16103	SOUTH	345.00	16107	WESTWING	345.00	1	-103.2	12.3	103.9	168.7	21.0	1124.6	Amp	14	14	14	10	160	160	0.8
19047	DEL BAC	115.00	19221	NOGALES	115.00	1	12.8	19.3	23.2	115.2	19.7	602.5	Amp	14	14	14	10	10	140	0.0
19047	DEL BAC	115.00	19064	TUCSON	115.00	1	-12.2	-13.9	18.5	92.2	15.3	602.5	Amp	14	14	14	10	191	191	0.0
16105	VAIL	345.00	17005	BICKNELL	345.00	1	-120.1	20.4	121.8	197.8	15.1	1365.1	Amp	14	14	14	10	10	170	0.1
16101	GREENLEE	345.00	17010	GREEN-AE	345.00	1	-84.8	15.6	86.3	139.4	10.2	1365.1	Amp	14	14	14	10	170	170	0.0
16103	SOUTH	345.00	16108	GATEWAY	345.00	1	40.2	-12.4	42.0	68.3	6.6	1548.0	Amp	14	14	4	10	10	160	0.0
16103	SOUTH	345.00	16108	GATEWAY	345.00	2	40.2	-12.4	42.0	68.3	6.6	1548.0	Amp	14	14	4	10	10	160	0.0
19047	DEL BAC	115.00	19201	BLACKMTN	115.00	1	-0.5	-5.4	5.4	27.0	4.5	602.5	Amp	14	14	14	10	140	140	0.0
16313	GW.3WP	100.00	16711	GATEWAY	15.00	1	0.0	0.0	0.0	0.0	0.0	100.0	Mva	14	14	14	10	10	161	0.0
14350	ADAMS	115.00	17001	APACHE	115.00	1	-99.2	-3.8	99.3	498.2	0.0	0.0	Amp	14	14	14	10	170	191	1.5

WESTERN SYSTEMS COORDINATING COUNCIL
2003 HS3-SA APPROVED BASE CASE

Zone	Zone_name	Loss_mw
10	SANTA CRUZ	11.75

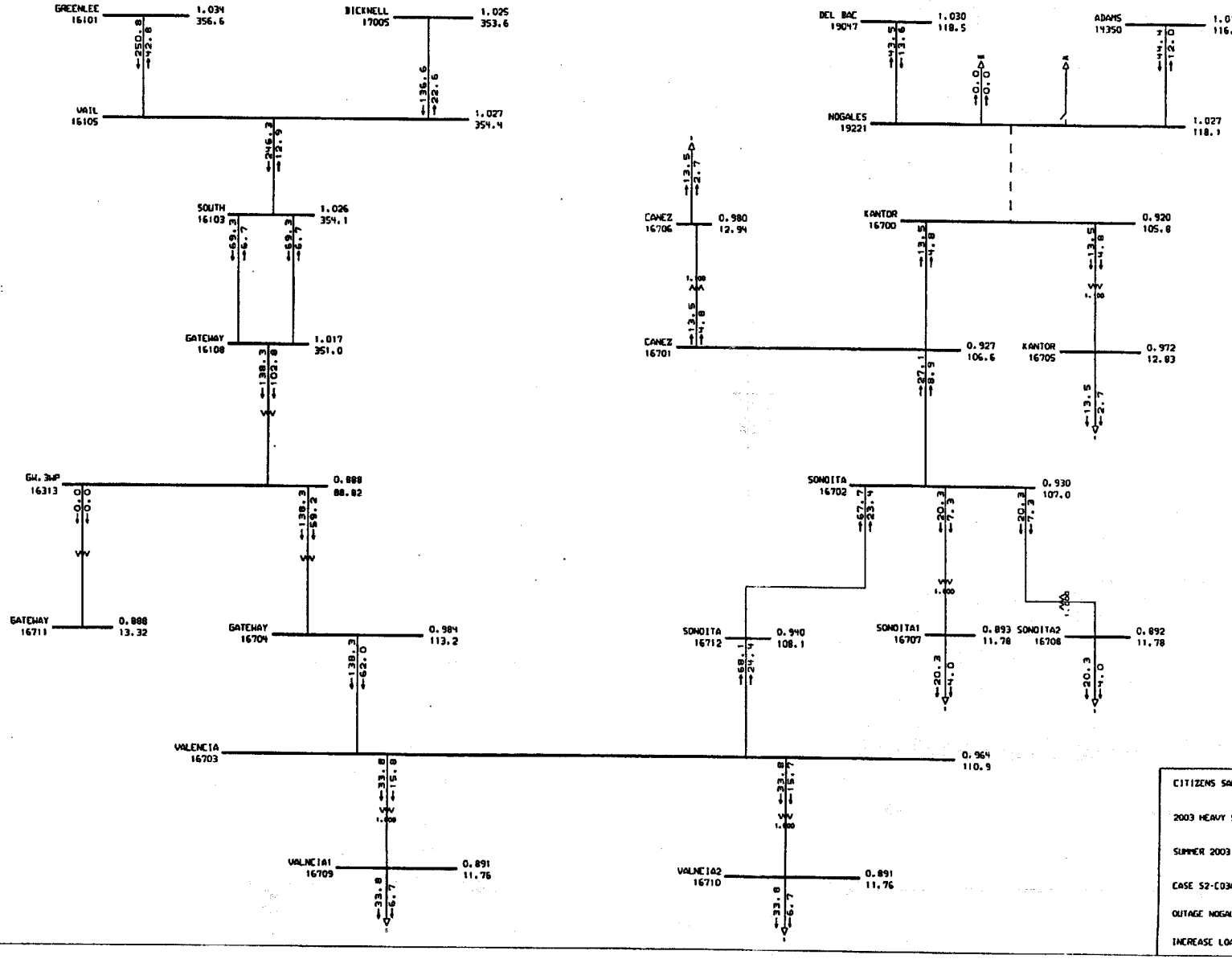

CITIZENS SANTA CRUZ DISTRICT TRANSMISSION PRJ.

2003 HEAVY SUMMER 03HS3SA

SUMMER 2003 BASE SYSTEM

CASE S2-C03A - SYSTEM W/ GATEWAY-VALENCIA LINE

OUTAGE NOGALES TO KANTOR

INCREASE LOAD UNTIL VOLTAGE IS 0.92PU

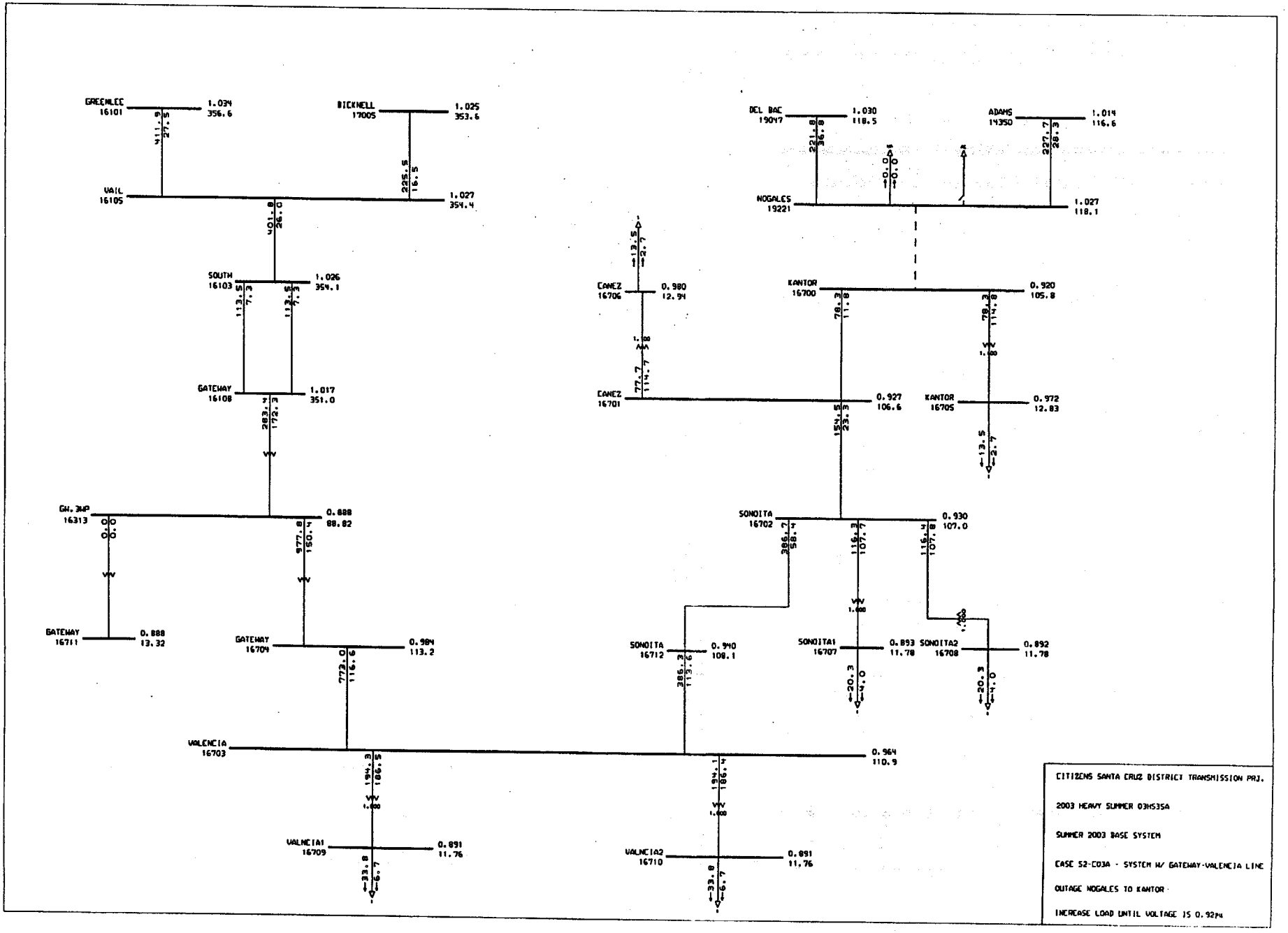
GREENLEE 16101 1.034 356.6
BICKNELL 17005 1.025 353.6
VAIL 16105 1.027 354.4
SOUTH 16103 1.026 354.1
GATEWAY 16108 1.017 351.0
GW.3WP 16313 0.888 88.82
GATEWAY 16711 0.888 13.32
GATEWAY 16704 0.984 113.2
VALENCIA 16703 0.964 110.9
VALNCIA1 16709 0.891 11.76
VALNCIA2 16710 0.891 11.76
DEL BAC 19047 1.030 118.5
ADAMS 14350 1.014 116.6
NOGALES 19221 1.027 118.1
KANTOR 16700 0.920 105.8
CANEZ 16706 0.980 12.94
CANEZ 16701 0.927 106.6
KANTOR 16705 0.972 12.83
SONOITA 16702 0.930 107.0
SONOITA 16712 0.940 108.1
SONOITA1 16707 0.893 11.78
SONOITA2 16708 0.892 11.78
CITIZENS SANTA CRUZ DISTRICT TRANSMISSION PRJ.
2003 HEAVY SUMMER 03HS35A
SUMMER 2003 BASE SYSTEM
CASE S2-C03A - SYSTEM W/ GATEWAY-VALENCIA LINE
OUTAGE NOGALES TO KANTOR
INCREASE LOAD UNTIL VOLTAGE IS 0.92PU

WESTERN SYSTEMS COORDINATING COUNCIL
2003 HS3-SA APPROVED BASE CASE

--From-	--NAME--	--KV--	---To--	--NAME--	--KV--	CK	---P---	---Q---	--MVA--	-AMPS--	-%rate-	-rate--	unit	-Af	-At	-Ar	-Zf	-Zt	-Zo	-Ploss
16703	VALENCIA	115.00	16709	VALNCIA1	13.20	1	33.8	15.8	37.3	194.3	186.5	20.0	Mva	14	14	14	10	10	10	0.0
16703	VALENCIA	115.00	16710	VALNCIA2	13.20	1	33.8	15.7	37.3	194.1	186.4	20.0	Mva	14	14	14	10	10	10	-0.0
16108	GATEWAY	345.00	16313	GW.3WP	100.00	1	138.3	102.8	172.3	283.4	172.3	100.0	Mva	14	14	14	10	10	161	0.0
16313	GW.3WP	100.00	16704	GATEWAY	115.00	1	138.3	59.2	150.4	977.8	151.5	100.0	Mva	14	14	14	10	10	161	-0.0
16703	VALENCIA	115.00	16704	GATEWAY	115.00	1	-136.9	-57.5	148.5	773.5	116.7	662.7	Amp	14	14	14	10	10	10	1.3
16700	KANTOR	115.00	16705	KANTOR	13.20	1	13.5	4.8	14.3	78.3	114.8	12.5	Mva	14	14	14	10	10	10	0.0
16701	CANEZ	115.00	16706	CANEZ	13.20	1	13.5	4.8	14.3	77.7	114.7	12.5	Mva	14	14	14	10	10	10	-0.0
16703	VALENCIA	115.00	16712	SONOITA	115.00	1	69.3	26.0	74.1	385.7	113.6	340.0	Amp	14	14	14	10	10	10	1.2
16702	SONOITA	115.00	16708	SONOITA2	13.20	1	20.3	7.3	21.6	116.4	107.8	20.0	Mva	14	14	14	10	10	10	-0.0
16702	SONOITA	115.00	16707	SONOITA1	13.20	1	20.3	7.3	21.5	116.3	107.7	20.0	Mva	14	14	14	10	10	10	-0.0
16702	SONOITA	115.00	16712	SONOITA	115.00	1	-67.7	-23.4	71.6	386.7	58.4	662.7	Amp	14	14	14	10	10	10	0.3
16101	GREENLEE	345.00	16104	SPRINGR	345.00	1	-378.6	39.4	380.7	616.3	50.0	1246.7	Amp	14	14	14	10	160	160	7.0
19047	DEL BAC	115.00	19221	NOGALES	115.00	1	-43.5	13.6	45.5	221.8	37.0	602.5	Amp	14	14	14	10	10	140	0.1
16103	SOUTH	345.00	16306	SO.3WP2	100.00	1	219.4	-0.1	219.4	357.7	32.6	672.0	Mva	14	14	14	10	160	160	0.1
14350	ADAMS	115.00	19221	NOGALES	115.00	1	44.4	-12.0	46.0	227.7	28.3	803.3	Amp	14	14	14	10	10	140	0.7
16101	GREENLEE	345.00	16105	VAIL	345.00	1	250.8	-42.8	254.4	411.9	27.5	1499.4	Amp	14	14	14	10	10	160	3.5
16103	SOUTH	345.00	16105	VAIL	345.00	1	-246.0	3.7	246.0	401.1	26.0	1548.0	Amp	14	14	14	10	10	160	0.3
16701	CANEZ	115.00	16702	SONOITA	115.00	1	-27.1	-8.9	28.5	154.5	23.3	662.7	Amp	14	14	14	10	10	10	0.0
19047	DEL BAC	115.00	19064	TUCSON	115.00	1	25.6	-10.4	27.6	134.5	22.3	602.5	Amp	14	14	14	10	191	191	0.0
16103	SOUTH	345.00	16107	WESTWING	345.00	1	-112.0	9.8	112.4	183.3	21.6	1124.6	Amp	14	14	14	10	160	160	1.0
16105	VAIL	345.00	16308	VAIL.3WP	100.00	1	137.6	40.6	143.4	233.6	21.4	672.0	Mva	14	14	14	10	160	160	0.0
16105	VAIL	345.00	17005	BICKNELL	345.00	1	-136.6	22.6	138.5	225.5	17.1	1365.1	Amp	14	14	14	10	10	170	0.1
19047	DEL BAC	115.00	19201	BLACKMTN	115.00	1	17.9	-3.2	18.2	88.5	14.7	602.5	Amp	14	14	14	10	140	140	0.0
16700	KANTOR	115.00	16701	CANEZ	115.00	1	-13.5	-4.8	14.3	78.3	11.8	662.7	Amp	14	14	14	10	10	10	0.0
16101	GREENLEE	345.00	17010	GREEN-AE	345.00	1	-95.3	17.2	96.8	156.7	11.5	1365.1	Amp	14	14	14	10	170	170	0.0
16103	SOUTH	345.00	16108	GATEWAY	345.00	1	69.3	-6.7	69.6	113.5	9.2	1548.0	Amp	14	14	4	10	10	160	0.1
16103	SOUTH	345.00	16108	GATEWAY	345.00	2	69.3	-6.7	69.6	113.5	9.2	1548.0	Amp	14	14	4	10	10	160	0.1
14350	ADAMS	115.00	17001	APACHE	115.00	1	-75.8	2.6	75.9	375.5	0.0	0.0	Amp	14	14	14	10	170	191	0.8
16313	GW.3WP	100.00	16711	GATEWAY	15.00	1	0.0	0.0	0.0	0.0	0.0	100.0	Mva	14	14	14	10	10	161	0.0

WESTERN SYSTEMS COORDINATING COUNCIL
2003 HS3-SA APPROVED BASE CASE

Zone	Zone_name	Loss_mw
10	SANTA CRUZ	9.21

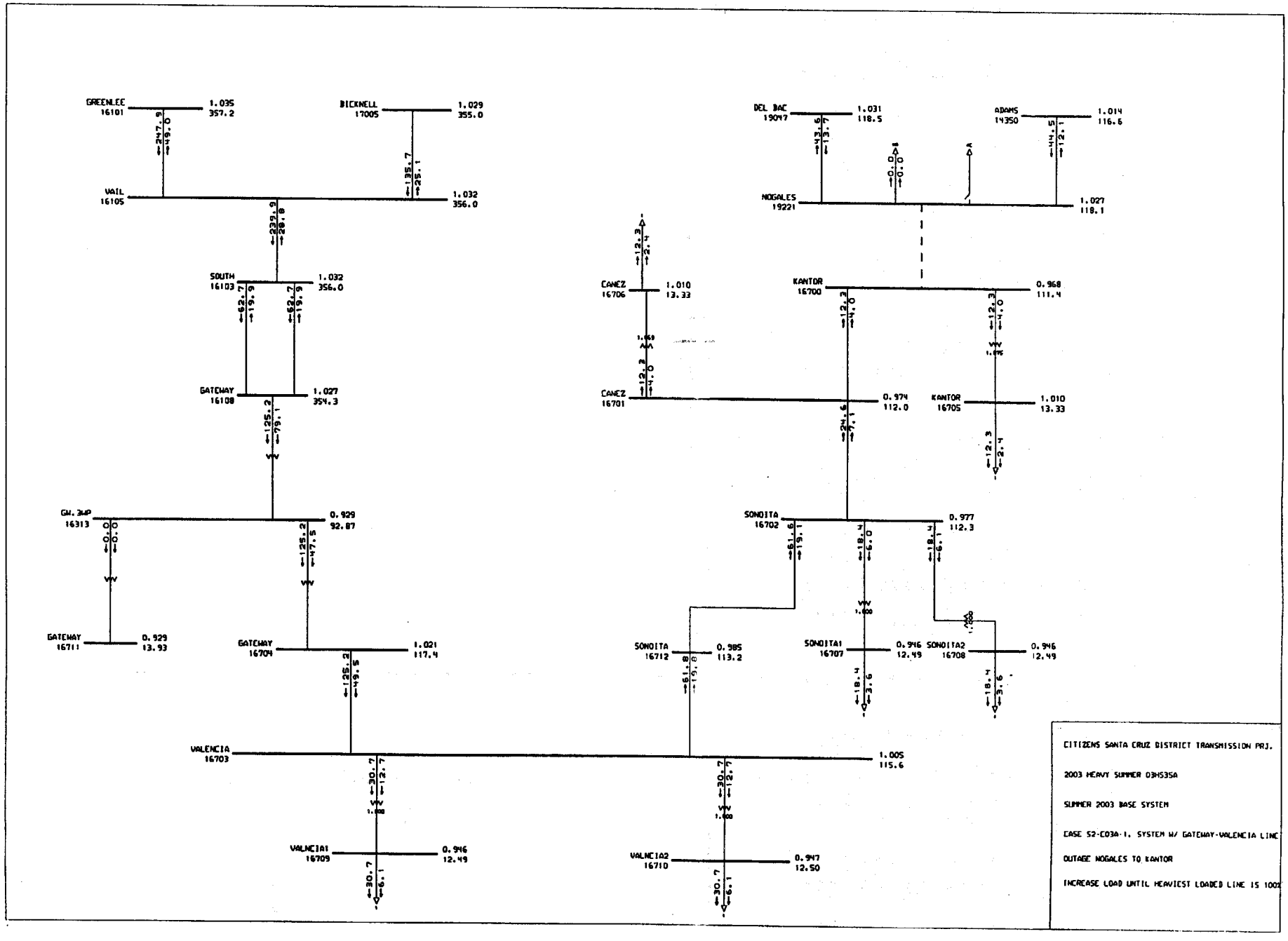
GREENLEE 16101 1.035 357.2
BICKNELL 17005 1.029 355.0
VAIL 16105 1.032 356.0
SOUTH 16103 1.032 356.0
GATEWAY 16108 1.027 354.3
GW.3WP 16313 0.929 92.87
GATEWAY 16711 0.929 13.93
GATEWAY 16704 1.021 117.4
VALENCIA 16703 1.005 115.6
VALNCIA1 16709 0.946 12.49
VALNCIA2 16710 0.947 12.50
SONOITA 16712 0.985 113.2
SONOITA 16702 0.977 112.3
SONOITA1 16707 0.946 12.49
SONOITA2 16708 0.946 12.49
CANEZ 16706 1.010 13.33
CANEZ 16701 0.974 112.0
KANTOR 16700 0.968 111.4
KANTOR 16705 1.010 13.33
DEL BAC 19047 1.031 118.5
NOGALES 19221 1.027 118.1
ADAMS 14350 1.014 116.6
CITIZENS SANTA CRUZ DISTRICT TRANSMISSION PRJ.
2003 HEAVY SUMMER 03HS35A
SUMMER 2003 BASE SYSTEM
CASE S2-C03A-1, SYSTEM W/ GATEWAY-VALENCIA LINE
OUTAGE NOGALES TO KANTOR
INCREASE LOAD UNTIL HEAVIEST LOADED LINE IS 100%

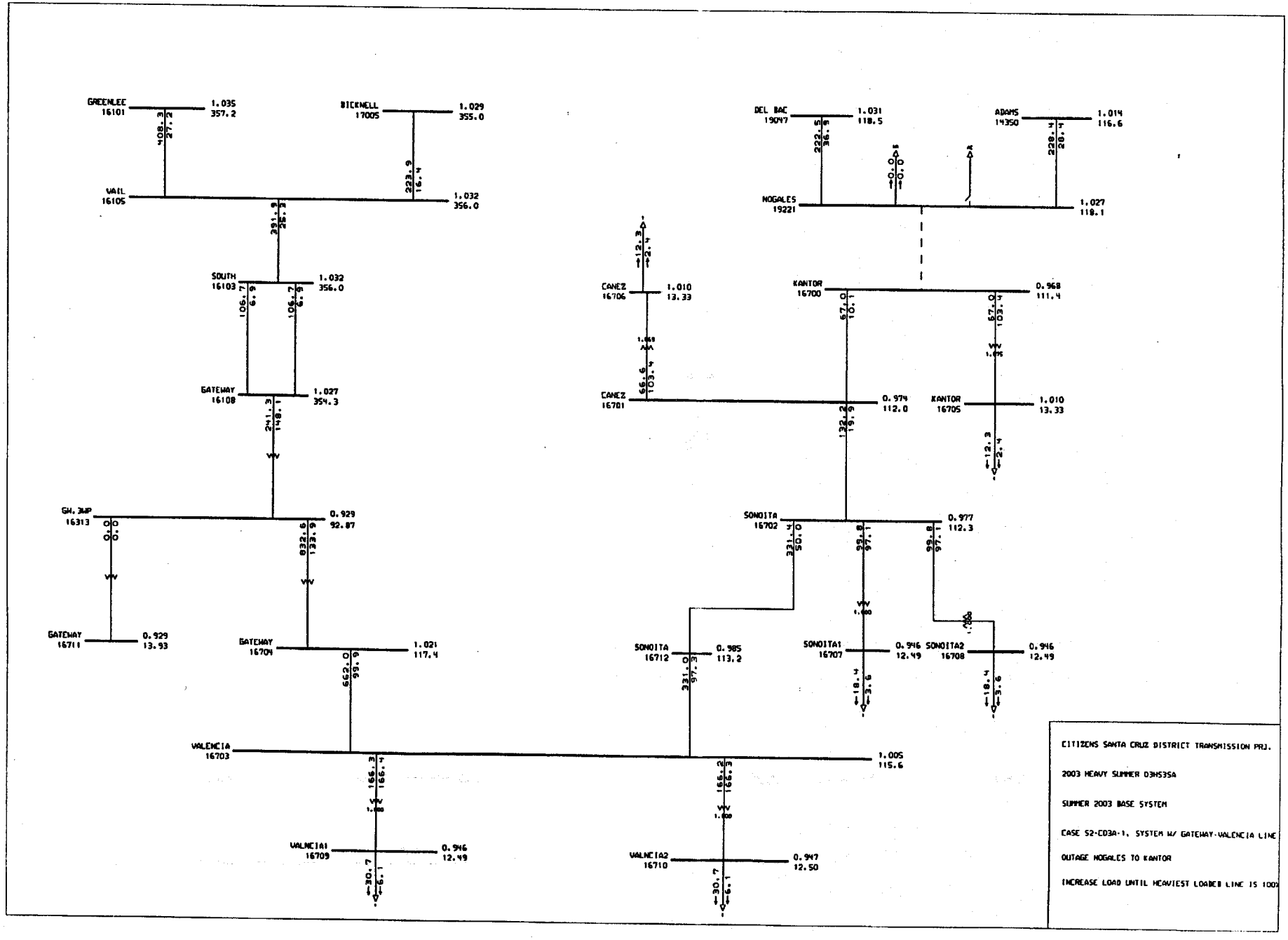
GREENLEE 16101 1.035 357.2
BICKNELL 17005 1.029 355.0
VAIL 16105 1.032 356.0
SOUTH 16103 1.032 356.0
GATEWAY 16108 1.027 354.3
GW.JMP 16313 0.929 92.87
GATEWAY 16711 0.929 13.93
GATEWAY 16704 1.021 117.4
VALENCIA 16703 1.005 115.6
VALNCIA1 16709 0.946 12.49
VALNCIA2 16710 0.947 12.50
DEL BAC 19047 1.031 118.5
ADAMS 14350 1.014 116.6
NOGALES 19221 1.027 118.1
CANEZ 16706 1.010 13.33
CANEZ 16701 0.974 112.0
KANTOR 16700 0.968 111.4
KANTOR 16705 1.010 13.33
SONOITA 16702 0.977 112.3
SONOITA 16712 0.985 113.2
SONOITA1 16707 0.946 12.49
SONOITA2 16708 0.946 12.49
CITIZENS SANTA CRUZ DISTRICT TRANSMISSION PRJ.
2003 HEAVY SUMMER D3HS3SA
SUMMER 2003 BASE SYSTEM
CASE S2-C03A-1, SYSTEM W/ GATEWAY-VALENCIA LINE
OUTAGE NOGALES TO KANTOR
INCREASE LOAD UNTIL HEAVIEST LOADED LINE IS 100%

WESTERN SYSTEMS COORDINATING COUNCIL
2003 HS3-SA APPROVED BASE CASE

--From-	--NAME--	--KV--	---To--	--NAME--	--KV--	CK	---P---	---Q---	--MVA--	-AMPS--	-%rate-	-rate--	unit	-Af	-At	-Ar	-Zf	-Zt	-Zo	-Ploss
16703	VALENCIA	115.00	16709	VALNCIA1	13.20	1	30.7	12.7	33.3	166.3	166.4	20.0	Mva	14	14	14	10	10	10	-0.0
16703	VALENCIA	115.00	16710	VALNCIA2	13.20	1	30.7	12.7	33.3	166.2	166.3	20.0	Mva	14	14	14	10	10	10	-0.0
16108	GATEWAY	345.00	16313	GW.3WP	100.00	1	125.2	79.1	148.1	241.3	148.1	100.0	Mva	14	14	14	10	10	161	0.0
16313	GW.3WP	100.00	16704	GATEWAY	115.00	1	125.2	47.5	133.9	832.6	134.7	100.0	Mva	14	14	14	10	10	161	-0.0
16700	KANTOR	115.00	16705	KANTOR	13.20	1	12.3	4.0	12.9	67.0	103.4	12.5	Mva	14	14	14	10	10	10	0.0
16701	CANEZ	115.00	16706	CANEZ	13.20	1	12.3	4.0	12.9	66.6	103.4	12.5	Mva	14	14	14	10	10	10	0.0
16703	VALENCIA	115.00	16704	GATEWAY	115.00	1	-124.3	-46.3	132.6	662.5	100.0	662.7	Amp	14	14	14	10	10	10	0.9
16703	VALENCIA	115.00	16712	SONOITA	115.00	1	62.8	20.9	66.1	330.4	97.3	340.0	Amp	14	14	14	10	10	10	0.9
16702	SONOITA	115.00	16708	SONOITA2	13.20	1	18.4	6.1	19.4	99.8	97.1	20.0	Mva	14	14	14	10	10	10	-0.0
16702	SONOITA	115.00	16707	SONOITA1	13.20	1	18.4	6.0	19.4	99.8	97.1	20.0	Mva	14	14	14	10	10	10	0.0
16702	SONOITA	115.00	16712	SONOITA	115.00	1	-61.6	-19.1	64.5	331.4	50.0	662.7	Amp	14	14	14	10	10	10	0.2
16101	GREENLEE	345.00	16104	SPRINGR	345.00	1	-376.8	42.5	379.2	612.8	49.8	1246.7	Amp	14	14	14	10	160	160	6.9
19047	DEL BAC	115.00	19221	NOGALES	115.00	1	-43.6	13.7	45.7	222.5	37.1	602.5	Amp	14	14	14	10	10	140	0.1
16103	SOUTH	345.00	16306	SO.3WP2	100.00	1	221.8	5.8	221.9	359.8	33.0	672.0	Mva	14	14	14	10	160	160	0.1
14350	ADAMS	115.00	19221	NOGALES	115.00	1	44.5	-12.1	46.1	228.4	28.4	803.3	Amp	14	14	14	10	10	140	0.7
16101	GREENLEE	345.00	16105	VAIL	345.00	1	247.9	-49.0	252.6	408.3	27.2	1499.4	Amp	14	14	14	10	10	160	3.4
16103	SOUTH	345.00	16105	VAIL	345.00	1	-239.6	19.3	240.3	389.8	25.3	1548.0	Amp	14	14	14	10	10	160	0.3
19047	DEL BAC	115.00	19064	TUCSON	115.00	1	25.7	-10.5	27.8	135.2	22.4	602.5	Amp	14	14	14	10	191	191	0.0
16105	VAIL	345.00	16308	VAIL.3WP	100.00	1	140.3	49.4	148.7	241.2	22.2	672.0	Mva	14	14	14	10	160	160	0.0
16103	SOUTH	345.00	16107	WESTWING	345.00	1	-107.7	14.7	108.7	176.2	21.6	1124.6	Amp	14	14	14	10	160	160	0.9
16701	CANEZ	115.00	16702	SONOITA	115.00	1	-24.6	-7.1	25.6	132.2	19.9	662.7	Amp	14	14	14	10	10	10	0.0
16105	VAIL	345.00	17005	BICKNELL	345.00	1	-135.7	25.1	138.0	223.9	17.0	1365.1	Amp	14	14	14	10	10	170	0.1
19047	DEL BAC	115.00	19201	BLACKMTN	115.00	1	17.9	-3.2	18.2	88.5	14.7	602.5	Amp	14	14	14	10	140	140	0.0
16101	GREENLEE	345.00	17010	GREEN-AE	345.00	1	-95.3	18.3	97.0	156.8	11.5	1365.1	Amp	14	14	14	10	170	170	0.0
16700	KANTOR	115.00	16701	CANEZ	115.00	1	-12.3	-4.0	12.9	67.0	10.1	662.7	Amp	14	14	14	10	10	10	0.0
16103	SOUTH	345.00	16108	GATEWAY	345.00	2	62.7	-19.9	65.8	106.7	7.8	1548.0	Amp	14	14	4	10	10	160	0.1
16103	SOUTH	345.00	16108	GATEWAY	345.00	1	62.7	-19.9	65.8	106.7	7.8	1548.0	Amp	14	14	4	10	10	160	0.1
14350	ADAMS	115.00	17001	APACHE	115.00	1	-75.9	2.7	76.0	376.1	0.0	0.0	Amp	14	14	14	10	170	191	0.8
16313	GW.3WP	100.00	16711	GATEWAY	15.00	1	0.0	0.0	0.0	0.0	0.0	100.0	Mva	14	14	14	10	10	161	0.0

WESTERN SYSTEMS COORDINATING COUNCIL
2003 HS3-SA APPROVED BASE CASE

Zone	Zone_name	Loss_mw
10	SANTA CRUZ	8.21

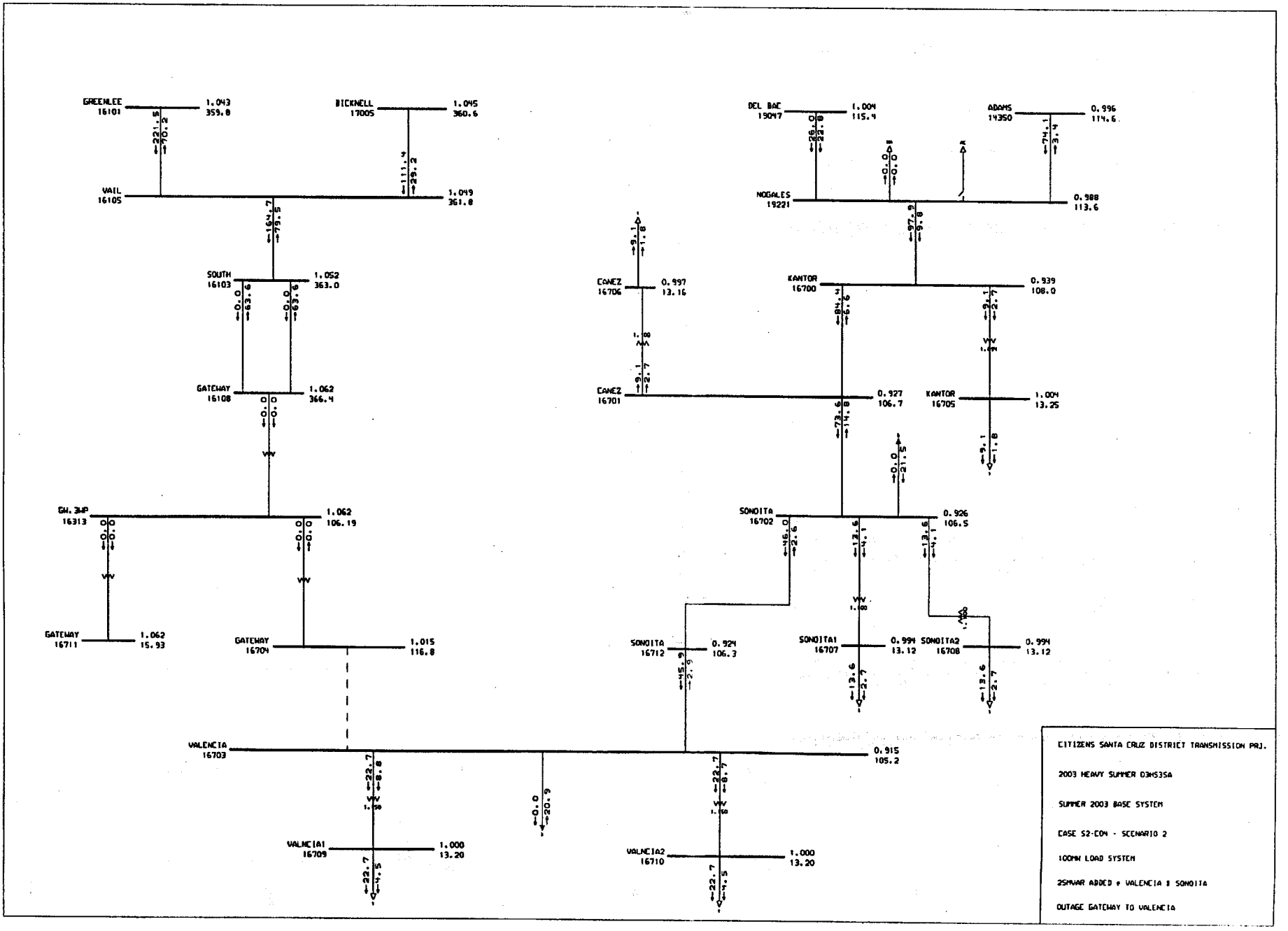
GREENLEE 16101 1.043 359.8
BICKNELL 17005 1.045 360.6
VAIL 16105 1.049 361.8
SOUTH 16103 1.052 363.0
GATEWAY 16108 1.062 366.4
GW. 34P 16313 1.062 106.19
GATEWAY 16711 1.062 15.93
GATEWAY 16704 1.015 116.8
DEL BAC 19047 1.004 115.4
ADAMS 19350 0.996 114.6
NOGALES 19221 0.988 113.6
CANEZ 16706 0.997 13.16
KANTOR 16700 0.939 108.0
CANEZ 16701 0.927 106.7
KANTOR 16705 1.004 13.25
SONOITA 16702 0.926 106.5
SONOITA 16712 0.924 106.3
SONOITA1 16707 0.994 13.12
SONOITA2 16708 0.994 13.12
VALENCIA 16703 0.915 105.2
VALNCIA1 16709 1.000 13.20
VALNCIA2 16710 1.000 13.20
CITIZENS SANTA CRUZ DISTRICT TRANSMISSION PRJ.
2003 HEAVY SUMMER 03HS35A
SUMMER 2003 BASE SYSTEM
CASE S2-CON - SCENARIO 2
100MW LOAD SYSTEM
25MVAR ADDED @ VALENCIA & SONOITA
OUTAGE GATEWAY TO VALENCIA

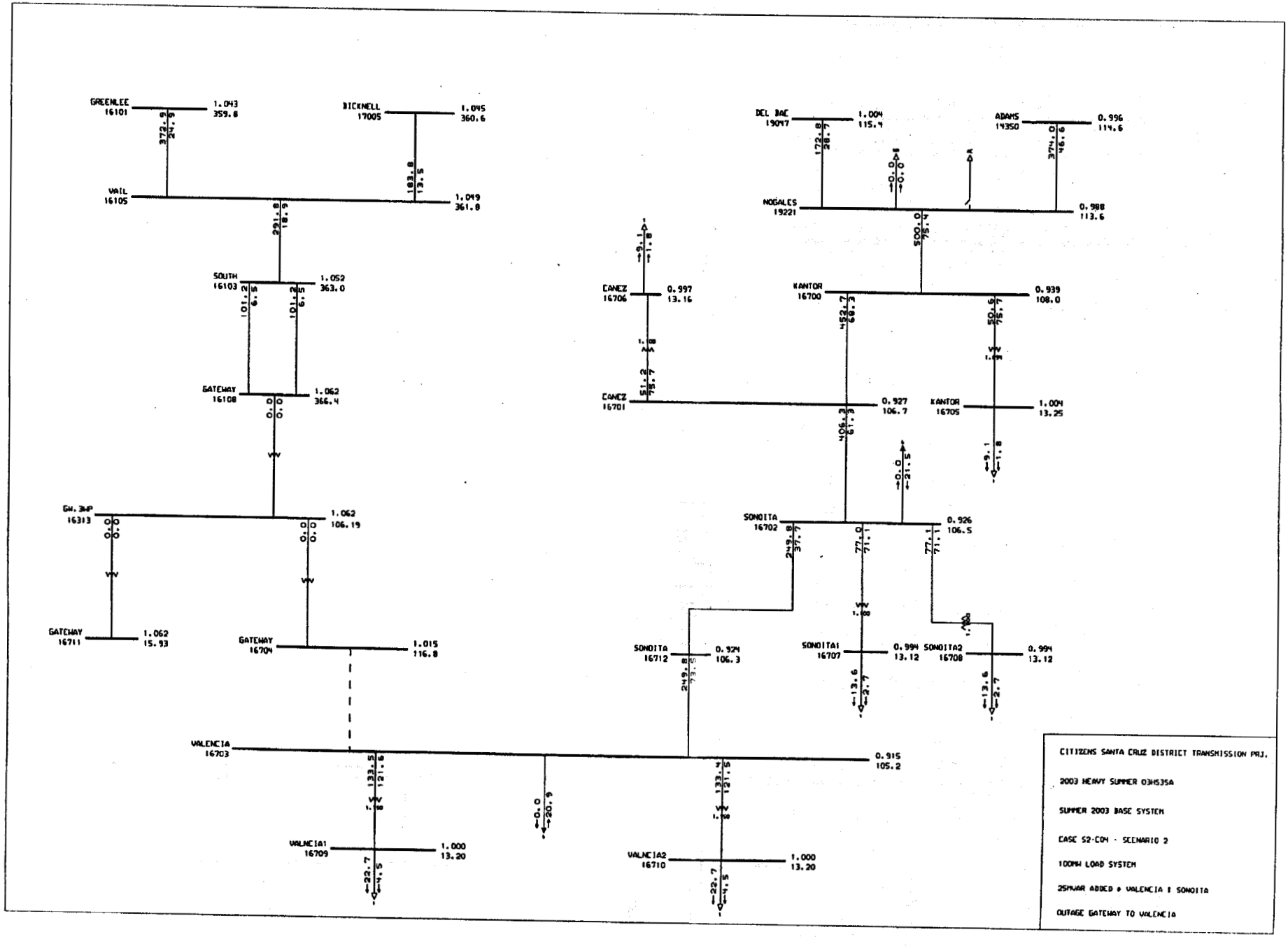
GREENLEE 16101 1.043 359.8
BICKNELL 17005 1.045 360.6
VAIL 16105 1.049 361.8
SOUTH 16103 1.052 363.0
GATEWAY 16108 1.062 366.4
GW.SWP 16313 1.062 106.19
GATEWAY 16711 1.062 15.93
GATEWAY 16704 1.015 116.8
VALENCIA 16703 0.915 105.2
VALNCIA1 16709 1.000 13.20
VALNCIA2 16710 1.000 13.20
DEL BAC 19047 1.004 115.4
ADAMS 14350 0.996 114.6
NOGALES 19221 0.988 113.6
CANEZ 16706 0.997 13.16
KANTOR 16700 0.939 108.0
CANEZ 16701 0.927 106.7
KANTOR 16705 1.004 13.25
SONOITA 16702 0.926 106.5
SONOITA 16712 0.924 106.3
SONOITA1 16707 0.994 13.12
SONOITA2 16708 0.994 13.12
CITIZENS SANTA CRUZ DISTRICT TRANSMISSION PRJ.
2003 HEAVY SUMMER 03HS35A
SUMMER 2003 BASE SYSTEM
CASE S2-C04 - SCENARIO 2
100MW LOAD SYSTEM
25MVAR ADDED @ VALENCIA & SONOITA
OUTAGE GATEWAY TO VALENCIA

WESTERN SYSTEMS COORDINATING COUNCIL
2003 HS3-SA APPROVED BASE CASE

--From-	--NAME--	--KV--	---To--	--NAME--	--KV--	CK	---P---	---Q---	--MVA--	-AMPS--	-%rate-	-rate--	unit	-Af	-At	-Ar	-Zf	-Zt	-Zo	-Ploss
16703	VALENCIA	115.00	16709	VALNCIA1	13.20	1	22.7	8.8	24.3	133.5	121.6	20.0	Mva	14	14	14	10	10	10	-0.0
16703	VALENCIA	115.00	16710	VALNCIA2	13.20	1	22.7	8.7	24.3	133.4	121.5	20.0	Mva	14	14	14	10	10	10	-0.0
16701	CANEZ	115.00	16706	CANEZ	13.20	1	9.1	2.7	9.5	51.2	75.7	12.5	Mva	14	14	14	10	10	10	0.0
16700	KANTOR	115.00	16705	KANTOR	13.20	1	9.1	2.7	9.5	50.6	75.7	12.5	Mva	14	14	14	10	10	10	0.0
16700	KANTOR	115.00	19221	NOGALES	115.00	1	-93.5	3.9	93.6	500.3	75.5	662.7	Amp	14	14	14	10	10	10	4.3
16703	VALENCIA	115.00	16712	SONOITA	115.00	1	-45.4	3.4	45.5	249.7	73.5	340.0	Amp	14	14	14	10	10	10	0.5
16702	SONOITA	115.00	16708	SONOITA2	13.20	1	13.6	4.1	14.2	77.1	71.1	20.0	Mva	14	14	14	10	10	10	-0.0
16702	SONOITA	115.00	16707	SONOITA1	13.20	1	13.6	4.1	14.2	77.0	71.1	20.0	Mva	14	14	14	10	10	10	-0.0
16700	KANTOR	115.00	16701	CANEZ	115.00	1	84.4	-6.6	84.7	452.7	68.3	662.7	Amp	14	14	14	10	10	10	1.7
16701	CANEZ	115.00	16702	SONOITA	115.00	1	73.6	-14.8	75.1	406.3	61.3	662.7	Amp	14	14	14	10	10	10	0.3
16101	GREENLEE	345.00	16104	SPRINGR	345.00	1	-366.9	55.0	371.0	595.2	48.6	1246.7	Amp	14	14	14	10	160	160	6.5
14350	ADAMS	115.00	19221	NOGALES	115.00	1	74.1	-3.4	74.2	374.0	46.6	803.3	Amp	14	14	14	10	10	140	2.1
16702	SONOITA	115.00	16712	SONOITA	115.00	1	46.0	-2.6	46.1	249.8	37.7	662.7	Amp	14	14	14	10	10	10	0.1
16103	SOUTH	345.00	16306	SO.3WP2	100.00	1	242.9	28.6	244.6	389.0	36.5	672.0	Mva	14	14	14	10	160	160	0.1
19047	DEL BAC	115.00	19221	NOGALES	115.00	1	26.0	22.8	34.6	172.8	29.1	602.5	Amp	14	14	14	10	10	140	0.1
16105	VAIL	345.00	16308	VAIL.3WP	100.00	1	165.6	83.0	185.2	295.6	27.8	672.0	Mva	14	14	14	10	160	160	0.0
16101	GREENLEE	345.00	16105	VAIL	345.00	1	221.5	-70.2	232.4	372.9	24.9	1499.4	Amp	14	14	14	10	10	160	2.6
19047	DEL BAC	115.00	19064	TUCSON	115.00	1	-20.9	-16.1	26.4	132.2	21.9	602.5	Amp	14	14	14	10	191	191	0.0
16103	SOUTH	345.00	16107	WESTWING	345.00	1	-78.5	30.8	84.3	134.1	21.1	1124.6	Amp	14	14	14	10	160	160	0.6
16103	SOUTH	345.00	16105	VAIL	345.00	1	-164.5	67.8	178.0	283.0	18.9	1548.0	Amp	14	14	14	10	10	160	0.1
16105	VAIL	345.00	17005	BICKNELL	345.00	1	-111.4	29.2	115.2	183.8	14.3	1365.1	Amp	14	14	14	10	10	170	0.1
16101	GREENLEE	345.00	17010	GREEN-AE	345.00	1	-82.4	19.5	84.7	135.9	10.0	1365.1	Amp	14	14	14	10	170	170	0.0
19047	DEL BAC	115.00	19201	BLACKMTN	115.00	1	-5.0	-6.7	8.4	41.9	6.9	602.5	Amp	14	14	14	10	140	140	0.0
16103	SOUTH	345.00	16108	GATEWAY	345.00	1	0.0	-63.6	63.6	101.2	6.5	1548.0	Amp	14	14	4	10	10	160	0.0
16103	SOUTH	345.00	16108	GATEWAY	345.00	2	0.0	-63.6	63.6	101.2	6.5	1548.0	Amp	14	14	4	10	10	160	0.0
16313	GW.3WP	100.00	16704	GATEWAY	115.00	1	0.0	-0.0	0.0	0.0	0.0	100.0	Mva	14	14	14	10	10	161	-0.0
16108	GATEWAY	345.00	16313	GW.3WP	100.00	1	0.0	0.0	0.0	0.0	0.0	100.0	Mva	14	14	14	10	10	161	-0.0
14350	ADAMS	115.00	17001	APACHE	115.00	1	-105.5	-6.0	105.7	532.7	0.0	0.0	Amp	14	14	14	10	170	191	1.7
16313	GW.3WP	100.00	16711	GATEWAY	15.00	1	0.0	0.0	0.0	0.0	0.0	100.0	Mva	14	14	14	10	10	161	0.0

WESTERN SYSTEMS COORDINATING COUNCIL
2003 HS3-SA APPROVED BASE CASE

Zone	Zone_name	Loss_mw
10	SANTA CRUZ	14.16

Appendix B

LOAD FORECAST REPORT

CITIZENS UTILITIES COMPANY

ARIZONA ELECTRIC DIVISION

R. W. Beck, Inc.

2002

TABLE OF CONTENTS

Section # -
Consecutive Page #

1. SUMMARY 1-1

1.1. COMPARISON TO 2000 STUDY 1-1
1.2. 2002 RESULTS 1-3

2. METHODOLOGY 2-5

2.1. DESCRIPTION 2-5
2.2. WEATHER NORMALIZATION 2-6
2.3. ASSUMPTIONS 2-8

3. BASIC DATA 3-10

3.1. HISTORICAL TRENDS 3-10
3.1.1. ENERGY REQUIREMENTS 3-10
3.1.2. PEAK DEMAND 3-11
3.2. EXPLANATORY VARIABLES 3-12
3.2.1. DISCUSSION 3-12
3.2.2. PROJECTION – BASE CASE 3-12
3.2.3. PROJECTION – ALTERNATIVE EXTERNAL CONDITIONS 3-13
3.2.4. PROJECTION – SEVERE WEATHER 3-14
3.3. SPECIAL LOADS 3-15

4. RESULTS 4-16

5. SPECIFICATIONS & STATISTICS 5-17

5.1. RESIDENTIAL ENERGY SALES 5-17
5.2. COMMERCIAL ENERGY SALES 5-18
5.3. INDUSTRIAL ENERGY SALES 5-18
5.4. PUBLIC AUTHORITY ENERGY SALES 5-18

ATTACHMENTS

This report has been prepared at the request of and for the use of Citizens Communications Company (Citizens). The conclusions, observations and recommendations contained herein constitute only the opinions of R. W. Beck, Inc. To the extent that statements, information and opinions provided by others have been used in the preparation of this report, R. W. Beck, Inc. has relied upon the same to be accurate, and for which no assurances are intended and no representations or warranties are made. R. W. Beck, Inc. makes no certification and gives no assurances except as explicitly set forth in this report.

Copyright 2002, R. W. Beck, Inc.
All rights reserved.

1. SUMMARY

This Report provides an update to our previous (2000) study regarding the projected loads for Citizens Utilities Company, Arizona Electric Division ("Citizens"). The first part of this Summary provides a comparison with the prior projection, before continuing with the discussion of the latest results.

1.1. COMPARISON TO 2000 STUDY

The 2002 Load Forecast is based upon the same basic utility data, updated to reflect data not previously available. New projections and updated data have also been used for the external demographic and economic data upon which the forecast is based. New weather data, from different weather stations, has been incorporated. Finally, the underlying equations used to project energy and peak demand values have been updated to reflect the more recent data now available.

The primary qualitative change to the load forecast reflects the treatment of projected electricity prices. The 2002 study incorporates the effects of a significant temporary surcharge, projected to be first imposed during 2002 and removed in late 2008. While there are no projected long-term impacts from the temporary surcharge, load growth patterns are disturbed by the intermediate changes.

The following graphs visually depict the comparison between the two projections, showing both the levels (actual values) and percentage changes (annual growth) for both forecasts.

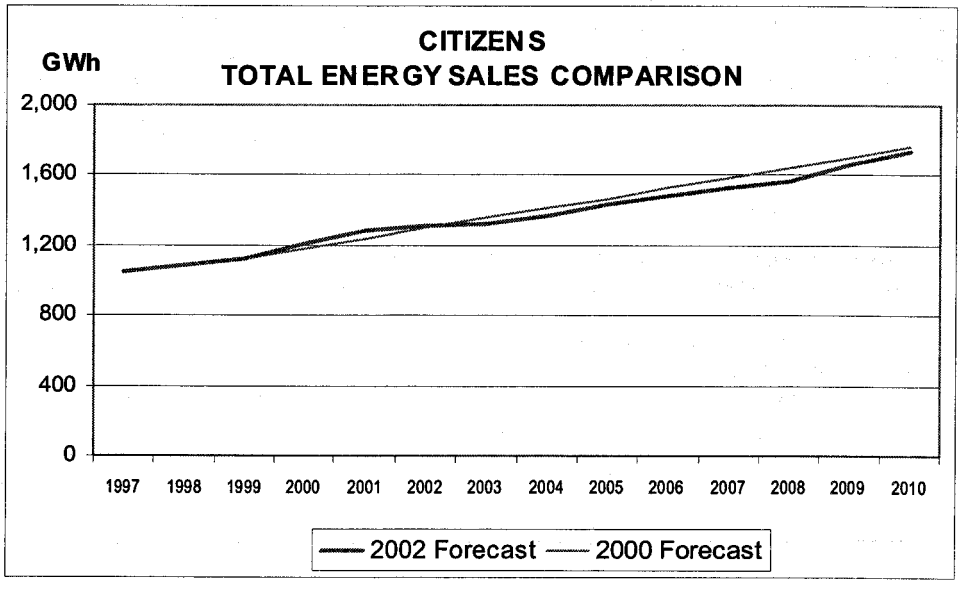

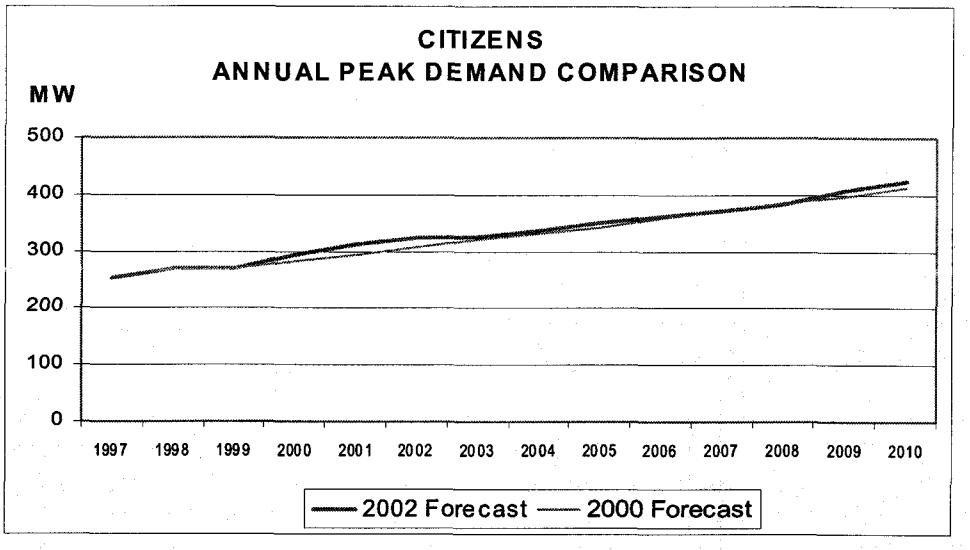
CITIZENS
ANNUAL PEAK DEMAND COMPARISON
MW
500
400
300
200
100
0
1997
1998
1999
2000
2001
2002
2003
2004
2005
2006
2007
2008
2009
2010
2002 Forecast
2000 Forecast

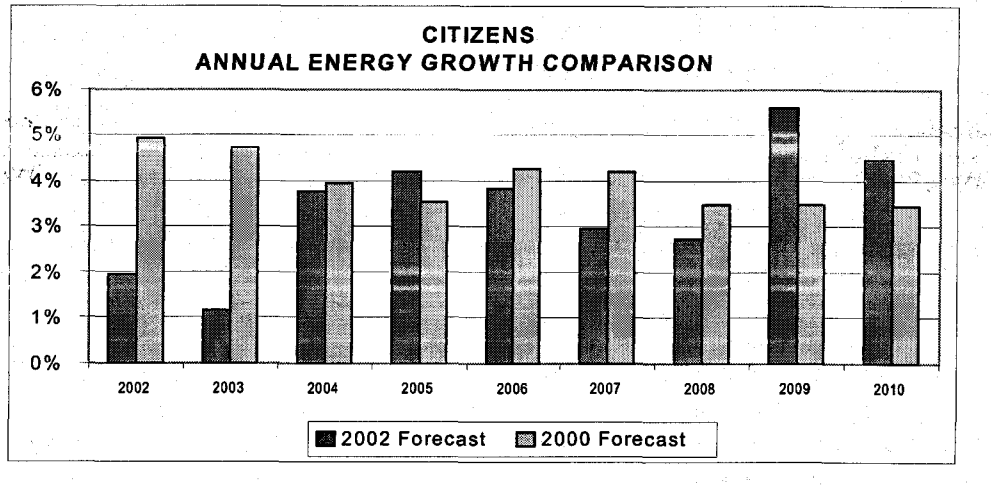
CITIZENS
ANNUAL ENERGY GROWTH COMPARISON
6%
5%
4%
3%
2%
1%
0%
2002
2003
2004
2005
2006
2007
2008
2009
2010
2002 Forecast
2000 Forecast

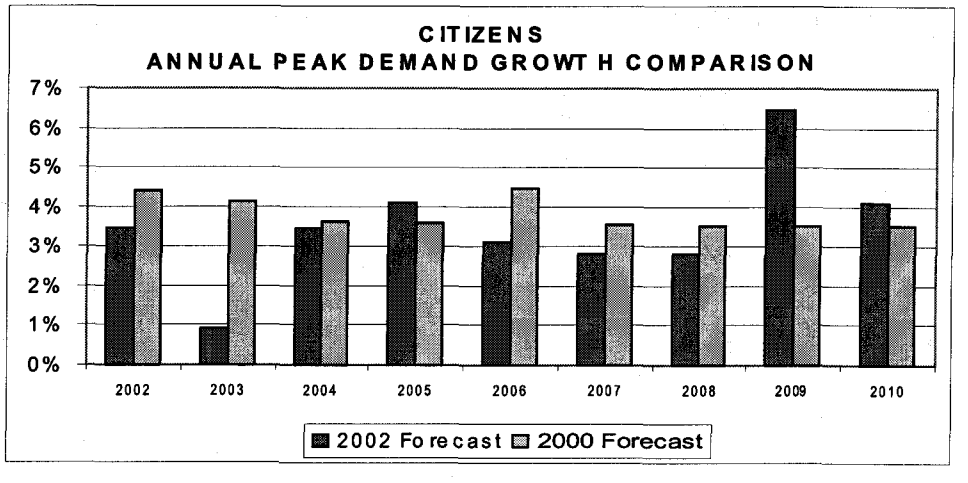
CITIZENS
ANNUAL PEAK DEMAND GROWT H COMPARISON
7%
6%
5%
4%
3%
2%
1%
0%
2002
2003
2004
2005
2006
2007
2008
2009
2010
2002 Fo re cast
2000 Forecast

1.2. 2002 RESULTS

Citizens' loads, as measured by the system's annual peak demand, are projected to grow at an average compound annual rate of about 4% over the next decade, increasing about 152 MW. Energy consumption is expected to follow suit, increasing by over 550 GWh over that same period.

Long-term load growth projections should be considered as indicative of the overall trend in growth. Load additions occur in discrete amounts that do not precisely follow such projections, but may be above or below the trend for a year or two.

Planning must remain flexible so as to be able to accommodate load additions that may be larger than forecast. Weather conditions will also cause planners difficulty, as mild or severe weather causes the actual load growth to deviate substantially from the smooth, weather-normal projection. For example, we estimate that "hot" weather conditions can boost the summer peak demand by about 15% compared to "normal" weather conditions. Thus, even for a relatively rapidly growing system such as Citizens, a single "hot" summer can result in approximately three years' load growth.

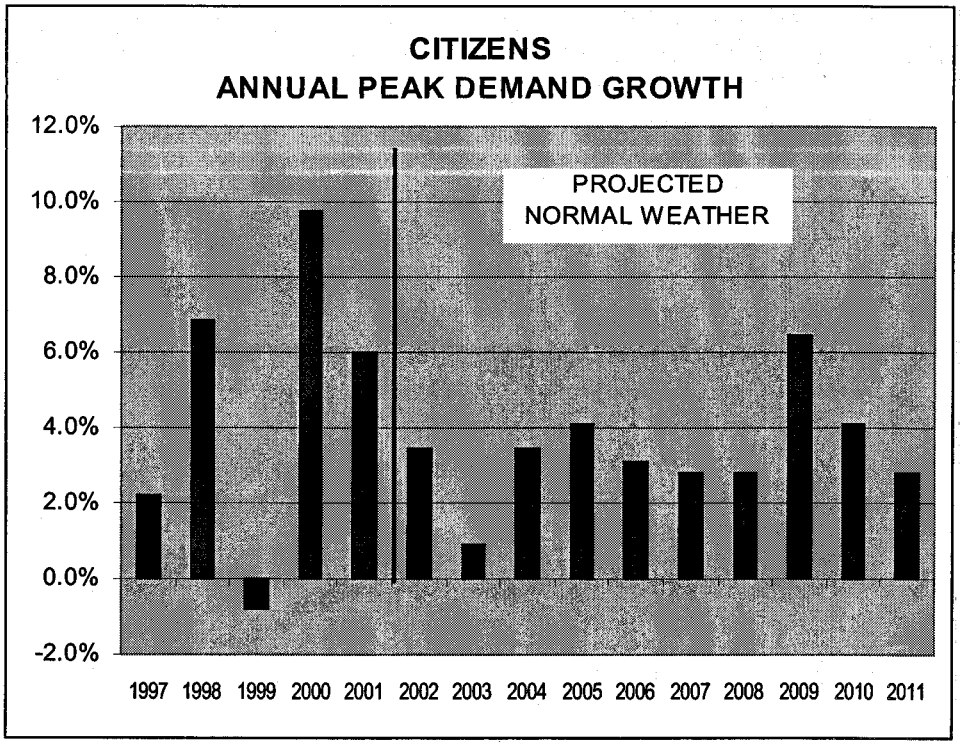

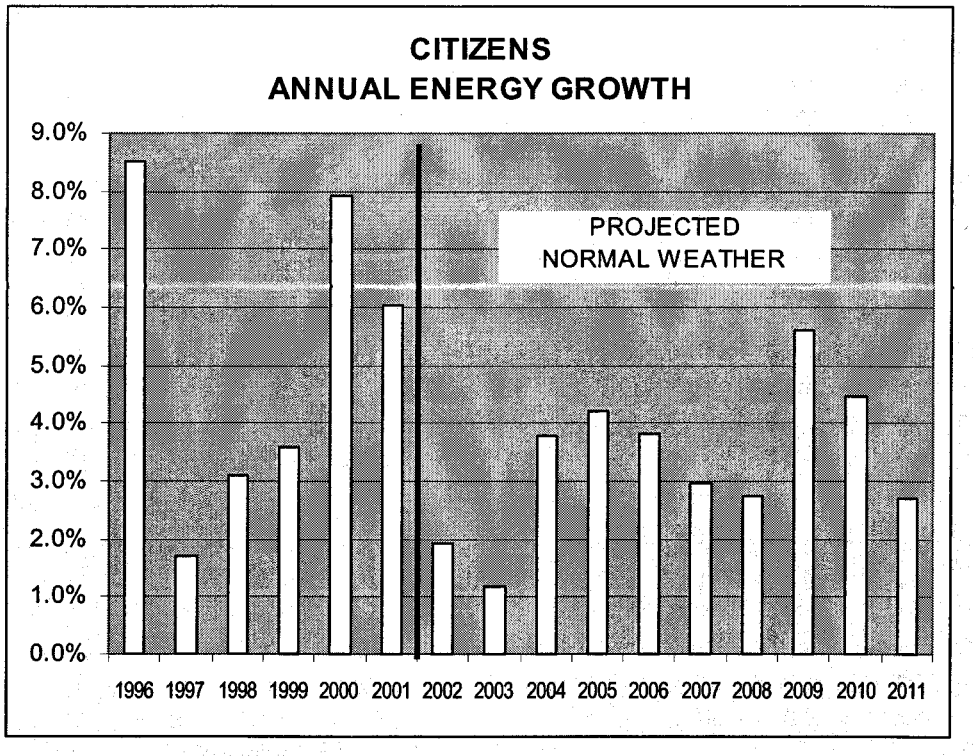

Energy sales to the residential customer class are projected to continue to be the largest major classification of electricity sales, averaging about 45% of the system's total sales. All of the major classes' growth rates are projected to be approximately the same.

The load forecast is based on the continued growth in population and the economy (*e.g.* employment) in the region as projected by Woods & Poole, Inc. a nationally recognized firm specializing in economic and demographic projections at the county level. We have modified the near term (through 2003) values to account for the 2001 recession and projected recovery. The graphics below illustrate the historical and projected growth for two of the major indicators in Mohave and Santa Cruz counties.

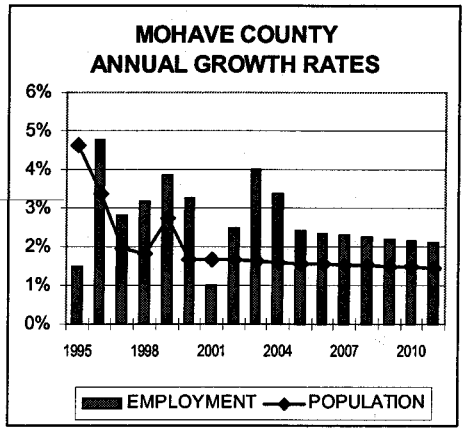

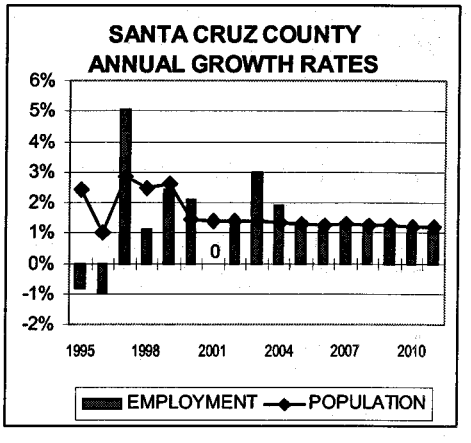

2. METHODOLOGY

2.1. DESCRIPTION

This Section presents the outlook for load growth on the Citizens system and documents the load forecasting methodology. Citizens' customer loads for the period 2002 through 2011 were forecast using an econometric load-forecasting model. This model was developed and tested on its ability to estimate the historical electrical requirements of Citizens' customers.

> *"In simple terms,* **econometrics** *deals with the application of statistical methods to economics. More broadly, it is concerned with (1) estimating economic relationships, (2) confronting economic theory with facts and testing hypotheses involving economic behavior, and (3) forecasting the behavior of economic variables." (p. 3)*
>
> *"Every analysis of an economic, social, political, or physical system is based on some underlying structure (known as a* **model***) that describes the behavior of agents in the system, and is the basic framework of analysis. In economics, as in the physical sciences, this model is set up in the form of equations, which, in this case, describe the behavior of economic and related variables." (p. 6)*
>
> *Introductory Econometrics with Applications, 2nd Ed., Ramu Ramanathan*

Separate equations were developed to evaluate and weigh the factors affecting customer-class-level electrical consumption. Individual customer classes examined included residential, commercial, industrial, public authority, streetlights, irrigation (where applicable), and "other". Primary attention was given to the electricity sales to residential, commercial, industrial, and public authority. Together, these four classes account for well over 90% of Citizens' total energy sales.

The load-forecast model includes variables that measure changes in the economy (*e.g.* income per household and employment), the price of electricity, the number of customers, and weather conditions. The primary econometric equations are provided in Section 5.

Peak demands were modeled through the use of a load-factor approach. This procedure was based on an examination of changes in seasonal peak demands, energy sales, and weather conditions. Coincidence factors were developed on a monthly basis to derive coincident peak demands.

Like all forecasts based on econometric methods, there are three primary risks to consider. First, there is the possibility that the equations that comprise the model are in some way inaccurate. We attempt to minimize this problem by comparing our results to a long enough history so that we can be reasonably assured that the model is a good representation of what has happened. Second, it is possible that the underlying historical relationships will be somehow different in the future from what they have been. We attempt to minimize this problem through a rigorous examination of the statistical results of our modeling efforts, looking particularly for signs of incipient change or instability in the relationships. Third, the projections used to generate the load forecast may themselves be in error. We try to minimize this problem by using projections provided by reputable firms that specialize in the provision of well-documented forecasts.

One of the major strengths of an econometric model is its ability to project a future that is *not* simply a continuation of present or historical trends. When the future is believed to be significantly different from the past, a load forecast should reflect those differences. Moreover, an econometric model can also be used to show the effects of different plausible futures. For example, comparing our *Weather-Normal* and *Severe* weather scenarios illustrates and clarifies the magnitude of variation that should be expected in loads due to weather fluctuations.

2.2. WEATHER NORMALIZATION

Variations in weather conditions can have a significant effect on a customer's use of electricity; therefore, mild or severe weather can have a dramatic effect on electric utility operations. A hot summer or a cold winter can cause a major increase in the use of electric energy, compared to what would have been consumed under normal (average) conditions. Peak demands are especially susceptible to weather fluctuations where, for example, a summer heat wave or winter cold spell can cause the peak demand to be significantly above what it otherwise would have been. System planning, including generation, transmission, and distribution, must take into account the likely impacts of various weather conditions. Our studies included factors that enabled us to estimate the general impact of historical weather variations on customer demands.

In recognition of these impacts, we prepared a separate projection related to varying weather conditions. For this projection, we assumed "severe" summer conditions. Normal weather is, for our purposes, defined as the long-term average of temperature and rainfall conditions experienced in the region. We defined "severe" conditions to be those that would be expected to occur for the summer season only once in twenty years. Weather values determined using this method were in close agreement with the most severe weather values found in the historical series over the period 1990-2001.

Degree-days are a measure of temperature commonly used in analyzing utility sales. Degree-days are calculated from a base value, usually 65° *F*. (NOAA standard). Specifically, degree-days are calculated by taking the highest and lowest temperatures for a given day, averaging these two values, and comparing the result to the base value (65). The result is the number of "degree days" for that particular day. This procedure is repeated for each day during the month, and the daily results are summed to determine the monthly degree-days.

Heating degree-days are calculated by taking the base value (65) and subtracting the daily averages, ignoring negative results. Cooling degree-days are calculated by taking the daily average and subtracting the base value (65), again ignoring negative results. For example, if a given day had a maximum temperature of 50° and a minimum temperature of 30°, that day's average temperature would be 40°. Comparing this value to the base (65°), we get 25 HDD and 0 CDD. Similarly, for another day that averages 75°, we would get 10 CDD and 0 HDD, because the average is above the base value. No individual day can have both CDD and HDD because each day's average must be either above or below the base value. However, a month can have both CDD and HDD because the monthly value is the simple sum of the daily values.

Finally, we used 11-year averages as the basis for the weather-normalized load forecast. Recent weather has been above these averages.

Table 1 below summarizes our assumptions for the two cases.

WEATHER VARIABILITY

District	Case	Annual Heating Degree Days	Annual Cooling Degree Days
Nogales	Normal	2696	1604
	Severe Summer	2305	1995
Kingman	Normal	2785	2347
	Severe Summer	2241	3124
Lake Havasu	Normal	1104	4582
	Severe Summer	645	5236

Table 1

2.3. ASSUMPTIONS

Like any modeling effort, many assumptions underlie the load-forecast results presented in this report. These assumptions range from global, over-arching issues to very specific, technical ones. The purpose of this section is to outline these assumptions and provide descriptions for the more significant assumptions that directly impact on the results.

Global, broad, or customary assumptions are difficult to list inclusively. In part, this is true precisely because of their matter-of-course nature. The following list is meant to be suggestive of the kinds of commonplace assumptions that underlie most forecasts of this nature.

Among the global assumptions we have made are the following:

- There will be no global, national, or local disasters that would significantly impact on the electrical usage of customers in the Southwest region.
- The historically observed cyclical nature of the US economy will continue, but no major recession or above-normal growth will occur.
- The provision of electricity will continue to be made primarily by local distributors.
- Electricity distributors will continue to purchase energy from generators that will be increasingly free from traditional rate regulation.
- There will be no critical technological breakthrough that alters the current fundamental relationships among the various competing fuels.

Specific assumptions fall into two general categories. First, there are assumptions related to the use of econometric methods. An example of such an assumption would be that the error terms are not serially correlated. We will not list such assumptions here, as they are well described in many statistical and econometric texts. The second category of specific assumptions includes those related to the derivation of the values that form the basis of the projections that are used in the load forecasting effort. The major assumptions from this second category are provided on the following page.

The following list of major specific assumptions contains descriptions of both the assumptions themselves and how each assumption affects the load-forecast results. Please see Section 3.2.2, page 3-12 for additional detail.

Assumption	Description of Effect
1. Demographic projections (population and the number of households) are based on projections made by Woods & Poole, Inc.	Demographic projections form the basis for the numbers of customers in various customer classes. Changes in the numbers of customers directly affect the load-forecast results.
2. Economic projections (employment, income, and other economic factors) are based on projections made by Woods & Poole, Inc. modified in the near term to reflect the 2001 recession and projected recovery.	Economic projections affect the usage of certain customer classes. Changes in the economy directly affect the load-forecast results.
3. Electricity prices for Citizens' customers will increase by 2% less than the rate of general inflation during the period 2002-2011, excluding temporary changes or surcharges.	The decline in the projected real price of electricity increases energy sales for several customer classes.
4. Weather conditions will be seasonally normal.	Milder or more severe weather has a significant effect upon peak demands and, to a lesser extent, energy sales. Please see the alternative scenario entitled *"Severe Weather"* for an illustration of the impact.

Table 2

3. BASIC DATA

In preparing the load forecast for Citizens, we utilized various data relating to electric utility operations. We obtained electricity sales, revenues, and number of customers for the major customer rate classifications: by month, generally for the period January 1990 through most of 2001. We also obtained data for that same period for monthly District (non-coincident) peak demands. Citizens (coincident) peak demands were also obtained for the latter part of this period. Citizens provided these data in response to our data requests.

Subsequent to our econometric analysis, data for the remainder of 2001 became available and was provided for purposes of comparison. Data for 2001 was not used in the development of the econometric equations, but is shown as the last historical observation.

Historical and projected economic and demographic data for Mohave and Santa Cruz counties were obtained from Woods & Poole, Inc. a private economic services firm specializing in county-level data. The historical data obtained from Woods & Poole, Inc. is identical to that provided by US governmental sources, such as the Bureau of Economic Analysis and the Bureau of Labor Statistics.

Climatological data relating specifically to Citizens' area was obtained from Citizens for weather stations that report to the National Oceanographic and Atmospheric Administration (NOAA). We used three weather stations, one for each District. This data was used to estimate historical relationships between weather, energy sales and peak demand, as well as to develop the alternative severe weather case.

3.1. HISTORICAL TRENDS

3.1.1. ENERGY REQUIREMENTS

Historical load trends provide a reasonable starting point in reviewing the electrical energy requirements of a utility system. The data for Citizens is shown in Table 3, page 3-11. The data is shown by calendar year for the period 1995 through 2001.

As shown in Table 3, growth in total energy sales averaged 5.1% annually from 1995 through 2001. This is greater than the average growth in energy sales forecast over the period 2002-2011 of about 4%.

CITIZENS UTILITY COMPANY				
	System Energy Sales		Peak Demand	
	GWh	Pct.Chg.	MW	Pct.Chg.
1995	951		238.8	
1996	1,032	8.5%	247.4	3.6%
1997	1,049	1.6%	252.8	2.2%
1998	1,082	3.1%	270.2	6.9%
1999	1,120	3.5%	268.0	-0.8%
2000	1,209	7.9%	294.2	9.8%
2001	1,282	6.0%	311.8	6.0%

Table 3

Over this same period (1995-2001) at the customer class level, residential sales growth averaged 6.3%, commercial sales growth was 4.1%, industrial sales *declined* by 7.2%,[1] and public authority sales growth was 8.5%. (Customer class level detail can be found in the Attachments.)

3.1.2. PEAK DEMAND

Table 3 also lists annual peak demands for the years 1995–2001. Changes in historical annual peak demand are more erratic than energy sales due to the critical impact of short-duration weather conditions.

Table 3 above shows peak demands have grown at a compound rate of 4.5% annually over the historical period shown above. This growth rate is close to the comparable growth rate in system energy sales of 5.1%. The load factor has not materially changed over this period, averaging about 47%.

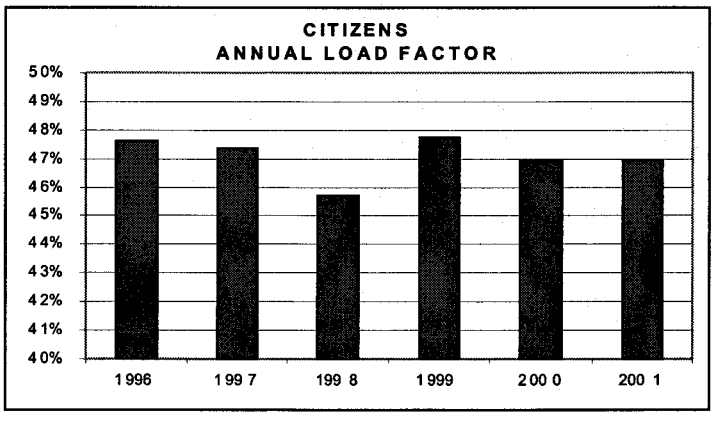

[1] Industrial sales fell in both Kingman and Lake Havasu districts during this period. Our projection assumes that both have bottomed-out. In total, Industrial sales account for less than 7% of Citizens' energy sales.

3.2. EXPLANATORY VARIABLES

3.2.1. DISCUSSION

Although many events combine to influence consumers in their use of electricity, a relatively small number of explanatory factors can be used to project electricity sales. This occurs for two main reasons: First, by choosing explanatory factors carefully, one or two data series can represent the combined influence of many factors. For example, one data series may be used to represent the general level of economic activity and vitality in the local area, replacing several more detailed explanatory series each of which is highly correlated with the general level of economic activity.

The second reason that a small number of explanatory factors can be used is that many factors, while affecting electricity usage to some extent, have only a minor effect. The major discretionary uses of electricity are relatively few in number. For example, space heating, space cooling, and water heating are typically the three principal uses in the residential class.

3.2.2. PROJECTION – BASE CASE

The area's economy is projected to grow at rates that are significantly below those of the 1990s. As measured by total personal income in constant, inflation-adjusted dollars, Woods & Poole project growth at annual rates of from 2.9% (Santa Cruz) to 3.6% (Mohave) when averaged over the period 2002-2011. Nearly half of this growth (about 45%) is related to *demographic* growth (*i.e.* increasing population) as compared to increasing income per capita. Growth in employment is projected at the relatively modest rates of 1.5% (Santa Cruz) to 2.6% (Mohave) when averaged throughout the forecast horizon.

Given the assumption of no significant recessions or above-normal growth, the economic projections should be considered as "trends". We would expect more *variation* in the growth rate of the economy than projected, due to cyclical economic conditions that are likely to occur.

Growth in the number of new households is projected to decline very slowly over the forecast horizon, starting from annual growth rates of 1.6% (Santa Cruz) and 1.9% (Mohave). Again, these projected growth rates are significantly below those experienced during the 1990s.

The price of electricity to all customer classes is projected to increase, on average by about 1% per year over the forecast period, excluding temporary surcharges. The *real* (inflation-adjusted) price of electricity is therefore projected to *decline* at the rate of about 2% annually. Our projection of electricity prices is also based on the likely impact of continuing deregulation in the industry as well as information provided by Citizens.

Citizens has indicated that a significant but temporary rate increase is expected to go into effect during the first several years of the forecast horizon. Economic theory suggests that customer response to temporary changes, particularly when announced as such, will be muted. If customers do react more extensively to the temporary surcharges, the load growth during the first few years of the forecast will be dampened further, while the growth following the removal of the surcharge would be increased. There should be no net effect on load growth over the period 2002-2011 due to temporary surcharges.

We projected the number of residential and commercial customers on the basis of historical relationships with the number of households in each county. The number of residential customers is projected to increase at a rate of about 2.0%, with this rate declining to about 1.6% by 2011. The number of commercial customers increases at a rate that is about ¾ of the rate of the residential class.

We projected weather related data series on the basis of long-term normal conditions. Whether or not weather conditions return to those long-term values or continue at the more recent (hotter) levels remains to be seen. We also developed a forecast based on weather conditions that reflect more extreme conditions. A discussion of these alternatives can be found in the section entitled WEATHER NORMALIZATION, on page 2-6.

3.2.3. PROJECTION – ALTERNATIVE EXTERNAL CONDITIONS

In addition to the base case projections described above, we also prepared an alternative projection to illustrate the potential for variation in the load forecast. Demographic and economic projections can vary, and while we believe that those provided by Woods & Poole, Inc. are among the best available, even they have noted that the future often unfolds differently than forecast. Based on information provided by Woods & Poole, Inc. regarding the accuracy of their county-level projections over periods whose length approximates that of this load forecast, we have developed an alternative projection of energy and demand.

In the alternative case, we have increased the annual growth rates for population and number of households by one percentage point. We have also increased the annual growth rates for employment and real personal income by one percentage point. Such variances are within the historically observed differentials reported by Woods & Poole, Inc. using their projections. While we have chosen to *increase* the annual growth rates, *decreases* of a similar magnitude are as likely to occur. Therefore, the important point to understand about this alternative projection is the *variance* from the base case.

3.2.4. PROJECTION – SEVERE WEATHER

Weather conditions can significantly impact both energy and peak demand for electric systems. By changing the weather variable values in the load-forecasting model, the impact of alternative weather conditions can be examined. Changing these values will have the effect of increasing the load during the particular year examined, but would not affect the overall growth rate of energy of peak demand over longer time spans. Since summer weather conditions are responsible for Citizens' current annual peak demands, we prepared a separate case to determine the impact of above-normal temperatures on Citizens' loads.

The alternative case's results for 2002 are presented below. For this case, we assumed hotter than normal summer and winter conditions which, in the aggregate, could be expected to occur about once in every twenty years. However, peak demands are strongly influenced by relatively short-duration weather conditions, which would be expected to occur more frequently. We therefore believe that this "severe" weather case is a useful planning tool for weather variation and the related impact on Citizens' loads.

COINCIDENT PEAK DEMANDS – SEVERE

DATE	NOGALES	KINGMAN	L.HAVASU	CITIZENS
Jan-02	40.1	64.4	77.0	181.5
Feb-02	39.7	75.7	85.0	200.4
Mar-02	39.8	69.8	75.4	185.0
Apr-02	42.8	73.5	88.5	204.8
May-02	51.9	89.7	113.7	255.3
Jun-02	51.7	104.7	147.0	303.4
Jul-02	52.1	117.3	163.5	332.9
Aug-02	54.0	122.8	177.7	354.5
Sep-02	45.5	110.8	145.3	301.6
Oct-02	41.6	81.3	106.0	228.9
Nov-02	38.9	69.1	65.1	173.1
Dec-02	43.6	80.7	78.8	203.1

Table 4

To illustrate the impact of hot weather, we note that the annual peak demand for Citizens shown in Table 4 is 354.5 MW, compared to a normal weather estimated (2002) peak of 322.5 MW, a difference of 32 MW or about 10%. If the additional uncertainty in load factor and coincidence factor were then included, the difference between normal weather and this "severe" case would be about 15%.

Finally, Arizona weather has been atypically warm, particularly in the last five years. Therefore, the "normal" conditions assumed in the base case are cooler than recent experience. For example, we applied the estimated weather coefficients to the difference between normal weather and the actual weather for 2001. The results showed that, under normal weather, total energy sales would have been about 4% lower and Citizen's peak demand would have been over 9% lower.

3.3. SPECIAL LOADS

In addition to the econometric analysis of historical data, Citizens provided us with "special" future load additions. These additions are based on specific local knowledge available to Citizens. "Special" loads were only included when the load addition was believed to be unrelated to general economic development in the area *and* when the relative size of the load exceeded the 1MW peak demand threshold.

These "special" loads, which account for about 5% of Citizens' total energy sales in the year 2011, are separately identified in the Report's tabulations. "Special" loads as incorporated in the load-forecast model do not respond to changes in the weather or to changes in demographic or economic conditions.

"Special" loads include the following seven specific developments:

- Black Mountain Prison facilities – Kingman
- American Woodmart – Kingman
- Copperfield Manufacturing facilities – Nogales
- SuperWalMart – Nogales
- Expansion of sewage facilities – Nogales
- Hospital facilities – Lake Havasu
- Water well facilities – Lake Havasu

4. Results

A complete tabulation of the annual results of the load forecasting effort can be found attached to this Report. Monthly results have been provided directly in the Excel® forecasting model provided. The following list describes some of the various tabulations available in the base case and the data contained therein. Data generally covers the historical period 1995-2001 and the projected period 2002-2011. Weather-normalized values for 2001 are denoted "2001a." All projected values are based on normal weather conditions, unless otherwise noted.

Page Number	Data Series	Units
1	System (Citizens) Annual Peak Demand	MW
	Citizens Annual Energy Sales, by Customer Class	MWh
	Annual Growth in Energy Sales, by Customer Class	%
2	Nogales Annual NCP Demand	MW
	Nogales Annual Energy Sales, by Customer Class	MWh
	Nogales Annual Growth in Energy Sales, by Customer Class	%
	Nogales Annual Number of Irrigation, Residential, and Commercial Customers	#
	Nogales Annual Growth in the Number of Irrigation, Residential, and Commercial Customers	%
3	Kingman Data (See page 2 above.)[1]	
4	Lake Havasu Data (See page 2 above.)[1]	
5	Annual Demographic and Economic Data for Mohave and Santa Cruz Counties[2] (Woods & Poole, Inc.)	#
Excel Files	Monthly Data	
	"Special" Load data, by location and District-totals, energy and peak demand	MWh; MW
	Citizens Coincident Peak Demands, by District, including and separating "special" loads	MW
	District-level peaks, NCP and CP, including and excluding "special" loads	MW
	District-level coincidence and load factors	#
	District-level energy values, total and by customer class, including and excluding "special" loads	MWh
	District-level numbers of customers	#

Table 5

The information shown in Table 5 is also provided for the alternative economic case that is described in section 3.2.3 above.

[1] Irrigation class data is relevant only to Nogales.
[2] Arizona data is also provided.

5. SPECIFICATIONS & STATISTICS

Shown below are the general equations for the four primary customer classes (Residential, Commercial, Industrial, and Public Authority) for which econometric regressions were developed. Irrigation, street lighting, and all other customer classifications were projected on the basis of seasonal factors and trends, if any. These classifications account for a very small percentage of total energy sales for Citizens. As described previously, "special" loads were projected by Citizens on the basis of information available to them regarding future development of relatively large loads.

The generalized specifications shown below provide information regarding the explanatory variables contained in each regression as well as related statistical information. The statistical information provided is the average for the District equations, and not all variables shown are included in every District's equation. However, the information below provides a useful itemization of the approach used for each customer class.

DEFINITION OF VARIABLES USED:

XMWh.....	Energy sales to customer class "X"
Peak Demand	System Peak Demand
PY96	County Personal Income, inflation-adjusted
POP.....	County Population
HH	County Number of Households
EMPL	County Employment
Pelec**X**.....	12-month (rolling) revenue per kWh for customer class "X"
XCus	Number of Customers in class "X"
HDD, CDD.....	Heating or Cooling Degree Days

For additional information regarding these equations and statistics, please see page 5-20.

5.1. RESIDENTIAL ENERGY SALES

RMWh = f (RCus, PelecR, HDD, CDD)

		T-Statistics:	
Standard Error of Regression	6.3%		
Adjusted R^2	0.89	PelecR	6.2
Durbin-Watson Statistic	1.89	HDD	11
Period Analyzed	1990-2000	CDD	13

5.2. COMMERCIAL ENERGY SALES

CMWh = f (CCUS, PY96/HH, PelecC, HDD, CDD)

		T-Statistics:	
Standard Error of Regression	7.0%		
Adjusted R^2	0.80	PelecC	6.4
Durbin-Watson Statistic	1.57	PY96/HH	4.7
Period Analyzed	1990-2000	HDD	2.8
		CDD	7.6

5.3. INDUSTRIAL ENERGY SALES

IMWh = f (POP or EMPL, HDD, CDD)

		T-Statistics:	
Standard Error of Regression	15.8%		
Adjusted R^2	0.55	POP or EMPL	8.0
Durbin-Watson Statistic	1.58	HDD	3.3
Period Analyzed	1990-2000	CDD	4.1

5.4. PUBLIC AUTHORITY ENERGY SALES

PMWh = f (POP or EMPL, PelecP, HDD, CDD)

		T-Statistics:	
Standard Error of Regression	10.5%		
Adjusted R^2	0.83	PelecP	5.2
Durbin-Watson Statistic	1.32	POP or EMPL	14.5
Period Analyzed	1992-2000	HDD	3.8
		CDD	6.6

Shown below are the equations used to project energy sales for each of the major customer classes. The initial subscript (N, K, or L) refers to Nogales, Kingman, or Lake Havasu data. Other abbreviations are described following the equation list.

RESIDENTIAL

$RMWH_N$ = RCUS • e^(1.63 + .00059CDD + .00072CDD_{-1} + .00050HDD + .00043HDD_{-1}) • PEMA^-.56

$RMWH_K$ = RCUS • e^(1.84 + .00047CDD + .00096CDD_{-1} + .00034HDD + .00048HDD_{-1}) • PEMA^-.64

$RMWH_L$ = RCUS • e^(1.58 + .00044CDD + .00073CDD_{-1} + .00060HDD + .00105HDD_{-1} + $\partial SEAS_i$) • PEMA^-.51

COMMERCIAL

$CMWH_N$ = CCUS • e^(4.78 + .00049CDD - .00016CDD_{-1} - .00012HDD + .00019HDD_{-1}) • PEMA^-.75

$CMWH_K$ = CCUS • e^(-1.25 + .00020CDD + .00057CDD_{-1} + .00014HDD) • PEMA^-.68 • YPHH^1.39

$CMWH_L$ = CCUS • e^(5.46 + .00020CDD + .00045CDD_{-1} + .00012HDD + .00010HDD_{-1} + $\partial SEAS_i$) • PEMA^-.31

INDUSTRIAL

$IMWH_N$ = e^(6.39 + .00023CDD) • EMPL^.38

$IMWH_K$ = e^(4.31 + .00022CDD) • POP^.71

$IMWH_L$ = e^(-1.57 + .00013CDD_{-1} - .00033HDD_{-1}) • EMPL^2.45

PUBLIC AUTHORITY

$PMWH_N$ = 1562 + .48CDD_{-1}

$PMWH_K$ = e^(-4.88 + .00003CDD + .00047CDD_{-1} + .00013HDD - .00044HDD_{-1}) • POP^2.61

$PMWH_L$ = e^(8.03 + .00039CDD_{-1} - .00039HDD_{-1}) • PEMA^-1.36 • EMPL^1.45

CCUS... number of commercial customers
CDD... cooling degree days
EMPL... employment
HDD... heating degree days
PEMA...real price of electricity, 12-month moving average for the class
POP... population
RCUS... number of residential customers
YPHH... real income per household

INFORMATION REGARDING STATISTICS PROVIDED:

Standard Error of Regression:	A measure of the equation's absolute error in matching the historical data. Monthly values are shown; to convert to expected *annual* values, divide the figure shown by approximately 3. (*C.f.* Adjusted R^2.)
Adjusted R^2:	A measure of the equation's ability to explain *variations* in the historical data. Values lie between 0 → 1; 1.0 would be perfect. (*C.f.* Standard Error of Regression.)
Durbin-Watson Statistic:	A measure of the tendency of the equation's errors to be related to the error immediately preceding the current observation. These values are "centered" on 2.0.
Period Analyzed:	The data range used in the estimation.
T-Statistic	A measure of the particular variable's (data series) ability to explain the historical data. Generally speaking, a value of 2.0 or larger is desired.

ATTACHMENT

CITIZENS MWh Energy Sales

	Irrigation	Residential	Commercial	Industrial	StLgt	PubAuth	Other	Special	Total	CP
1995	1,129	427,807	296,830	127,547	1,961	68,221	27,528	-	951,023	
1996	1,423	465,002	308,152	145,218	1,904	71,418	38,699	-	1,031,816	247.4
1997	641	477,840	321,495	126,511	1,872	76,673	44,162	-	1,049,194	252.8
1998	577	505,109	335,526	110,146	2,301	82,486	45,413	-	1,081,558	270.2
1999	485	536,124	348,105	102,098	2,382	83,153	48,122	-	1,120,469	268.0
2000	574	583,001	364,016	92,631	1,147	93,807	73,926	-	1,209,102	294.2
2001	294	618,463	376,689	81,702	1,606	111,324	92,023	-	1,282,101	311.8
2001a	480	574,625	367,522	81,504	1,606	110,397	92,009	-	1,228,144	282.8
2002	480	618,744	382,029	86,073	1,976	106,142	91,918	19,593	1,306,955	322.5
2003	480	606,968	379,494	91,352	1,976	107,115	91,985	42,847	1,322,216	325.5
2004	480	624,840	392,851	96,144	1,976	111,739	92,049	52,137	1,372,216	336.7
2005	480	643,003	405,123	99,911	1,976	116,039	92,114	71,409	1,430,055	350.4
2006	480	661,432	417,753	103,785	1,976	120,526	92,178	86,593	1,484,723	361.3
2007	480	680,123	430,730	107,773	1,976	125,192	92,243	90,097	1,528,614	371.5
2008	480	699,284	444,224	111,880	1,976	130,073	92,307	90,097	1,570,320	381.9
2009	480	743,320	474,002	116,109	1,976	139,929	92,372	90,097	1,658,284	406.5
2010	480	779,155	498,995	120,462	1,976	148,763	92,436	90,097	1,732,364	423.1
2011	480	800,001	514,437	124,951	1,976	154,731	92,501	90,097	1,779,173	434.8

CITIZENS MWh Energy Sales ANNUAL GROWTH

	Irrigation	Residential	Commercial	Industrial	StLgt	PubAuth	Other	Special	Total	CP
1995										
1996	26.0%	8.7%	3.8%	13.9%	-2.9%	4.7%	40.6%	#N/A	8.5%	
1997	-55.0%	2.8%	4.3%	-12.9%	-1.7%	7.4%	14.1%	#N/A	1.7%	2.2%
1998	-10.0%	5.7%	4.4%	-12.9%	22.9%	7.6%	2.8%	#N/A	3.1%	6.9%
1999	-15.9%	6.1%	3.7%	-7.3%	3.5%	0.8%	6.0%	#N/A	3.6%	-0.8%
2000	18.4%	8.7%	4.6%	-9.3%	-51.8%	12.8%	53.6%	#N/A	7.9%	9.8%
2001	-48.8%	6.1%	3.5%	-11.8%	40.0%	18.7%	24.5%	#N/A	6.0%	6.0%
2001a	63.3%	-7.1%	-2.4%	-0.2%	0.0%	-0.8%	0.0%	#N/A	-4.2%	-9.3%
2002	0.0%	7.7%	3.9%	5.6%	23.0%	-3.9%	-0.1%	#N/A	6.4%	14.1%
2003	0.0%	-1.9%	-0.7%	6.1%	0.0%	0.9%	0.1%	118.7%	1.2%	0.9%
2004	0.0%	2.9%	3.5%	5.2%	0.0%	4.3%	0.1%	21.7%	3.8%	3.4%
2005	0.0%	2.9%	3.1%	3.9%	0.0%	3.8%	0.1%	37.0%	4.2%	4.1%
2006	0.0%	2.9%	3.1%	3.9%	0.0%	3.9%	0.1%	21.3%	3.8%	3.1%
2007	0.0%	2.8%	3.1%	3.8%	0.0%	3.9%	0.1%	4.0%	3.0%	2.8%
2008	0.0%	2.8%	3.1%	3.8%	0.0%	3.9%	0.1%	0.0%	2.7%	2.8%
2009	0.0%	6.3%	6.7%	3.8%	0.0%	7.6%	0.1%	0.0%	5.6%	6.4%
2010	0.0%	4.8%	5.3%	3.7%	0.0%	6.3%	0.1%	0.0%	4.5%	4.1%
2011	0.0%	2.7%	3.1%	3.7%	0.0%	4.0%	0.1%	0.0%	2.7%	2.8%

NOTES:

1. "2001a" shows weather-normalized values for 2001.
2. In the Annual Growth table, "2001a" shows the comparison between actual and weather-normalized values.

NOGALES MWh Energy Sales

	Irrigation	Residential	Commercial	Industrial	StLgt	PubAuth	OwnUse	Special	Total	NCP
1995	890	64,382	83,711	20,374	1,445	21,781	1,369	-	193,952	41.6
1996	1,164	69,444	84,210	19,743	1,404	20,374	1,523	-	197,862	41.5
1997	483	72,846	87,713	20,746	1,376	19,156	1,629	-	203,949	42.5
1998	416	78,165	90,354	20,742	1,812	20,830	1,380	-	213,699	45.3
1999	485	83,483	93,865	20,599	1,955	18,689	1,827	-	220,903	50.5
2000	574	85,453	102,088	20,794	732	20,940	2,000	-	232,581	53.3
2001	294	92,089	108,018	12,971	1,088	31,177	2,050	-	247,687	54.2
2001a	480	91,243	107,705	12,902	1,088	31,078	2,036		246,532	55.7
2002	480	94,980	106,641	8,043	1,496	29,515	1,918	6,745	249,818	57.2
2003	480	93,557	103,510	8,133	1,496	29,515	1,985	20,947	259,624	59.2
2004	480	96,098	106,002	8,191	1,496	29,515	2,049	26,149	269,980	60.4
2005	480	98,677	108,535	8,232	1,496	29,515	2,114	26,149	275,198	61.6
2006	480	101,286	111,105	8,271	1,496	29,515	2,178	26,149	280,480	62.8
2007	480	103,926	113,713	8,309	1,496	29,515	2,243	26,149	285,830	64.1
2008	480	106,637	116,409	8,345	1,496	29,515	2,307	26,149	291,339	65.4
2009	480	112,823	124,026	8,381	1,496	29,515	2,372	26,149	305,242	69.1
2010	480	118,015	130,238	8,415	1,496	29,515	2,436	26,149	316,743	71.3
2011	480	120,927	133,195	8,448	1,496	29,515	2,501	26,149	322,711	72.7

NOGALES MWh Energy Sales ANNUAL GROWTH

	Irrigation	Residential	Commercial	Industrial	StLgt	PubAuth	OwnUse	Special	Total	NCP
1995										
1996	30.8%	7.9%	0.6%	-3.1%	-2.8%	-6.5%	11.2%	#N/A	2.0%	-0.3%
1997	-58.5%	4.9%	4.2%	5.1%	-2.0%	-6.0%	7.0%	#N/A	3.1%	2.5%
1998	-13.9%	7.3%	3.0%	0.0%	31.7%	8.7%	-15.3%	#N/A	4.8%	6.6%
1999	16.6%	6.8%	3.9%	-0.7%	7.9%	-10.3%	32.4%	#N/A	3.4%	11.4%
2000	18.4%	2.4%	8.8%	0.9%	-62.6%	12.0%	9.5%	#N/A	5.3%	5.5%
2001	-48.8%	7.8%	5.8%	-37.6%	48.6%	48.9%	2.5%	#N/A	6.5%	1.7%
2001a	63.3%	-0.9%	-0.3%	-0.5%	0.0%	-0.3%	-0.7%		-0.5%	2.7%
2002	0.0%	4.1%	-1.0%	-37.7%	37.5%	-5.0%	-5.8%	#N/A	1.3%	2.8%
2003	0.0%	-1.5%	-2.9%	1.1%	0.0%	0.0%	3.5%	210.6%	3.9%	3.5%
2004	0.0%	2.7%	2.4%	0.7%	0.0%	0.0%	3.3%	24.8%	4.0%	2.0%
2005	0.0%	2.7%	2.4%	0.5%	0.0%	0.0%	3.1%	0.0%	1.9%	2.0%
2006	0.0%	2.6%	2.4%	0.5%	0.0%	0.0%	3.1%	0.0%	1.9%	2.0%
2007	0.0%	2.6%	2.3%	0.5%	0.0%	0.0%	3.0%	0.0%	1.9%	2.0%
2008	0.0%	2.6%	2.4%	0.4%	0.0%	0.0%	2.9%	0.0%	1.9%	2.0%
2009	0.0%	5.8%	6.5%	0.4%	0.0%	0.0%	2.8%	0.0%	4.8%	5.7%
2010	0.0%	4.6%	5.0%	0.4%	0.0%	0.0%	2.7%	0.0%	3.8%	3.3%
2011	0.0%	2.5%	2.3%	0.4%	0.0%	0.0%	2.6%	0.0%	1.9%	2.0%

	NOGALES Customers			**NOGALES Customers ANNUAL GROWTH**		
	Irrigation	Residential	Commercial	Irrigation	Residential	Commercial
1995	41	9,466	1,785			
1996	41	9,745	1,780	-0.2%	2.9%	-0.3%
1997	38	10,037	1,836	-7.3%	3.0%	3.2%
1998	36	10,372	1,938	-5.7%	3.3%	5.5%
1999	34	10,878	2,020	-6.7%	4.9%	4.2%
2000	35	11,483	1,997	4.7%	5.6%	-1.2%
2001	31	11,867	2,439	-13.0%	3.3%	22.2%
2002	35	12,273	2,023	13.8%	3.4%	-17.1%
2003	35	12,468	2,040	0.0%	1.6%	0.9%
2004	35	12,663	2,058	0.0%	1.6%	0.9%
2005	35	12,858	2,075	0.0%	1.5%	0.8%
2006	35	13,050	2,092	0.0%	1.5%	0.8%
2007	35	13,240	2,109	0.0%	1.5%	0.8%
2008	35	13,428	2,125	0.0%	1.4%	0.8%
2009	35	13,613	2,141	0.0%	1.4%	0.8%
2010	35	13,797	2,157	0.0%	1.3%	0.7%
2011	35	13,979	2,173	0.0%	1.3%	0.7%

KINGMAN MWh Energy Sales

	Irrigation	Residential	Commercial	Industrial	StLgt	PubAuth	Transm.	Special	Total	NCP
1995	231	129,008	99,403	63,948	516	26,124	26,159	-	345,389	76.1
1996	254	142,058	105,911	76,762	500	27,729	37,176	-	390,390	81.2
1997	158	147,931	115,092	57,668	496	30,430	42,533	-	394,308	90.5
1998	155	155,829	120,722	49,701	489	32,746	33,042	-	392,684	85.0
1999	-	164,644	123,204	38,398	427	32,926	45,987	-	405,586	84.3
2000	-	180,415	123,885	31,185	415	36,370	71,926	-	444,196	99.7
2001	-	187,426	126,613	28,919	518	39,069	89,973	-	472,518	104.8
2001a		175,980	123,493	28,756	518	38,778	89,973		457,497	**104.6**
2002	-	184,415	134,859	31,287	480	38,882	90,000	5,256	485,179	110.1
2003	-	180,188	135,674	31,645	480	40,744	90,000	7,008	485,740	110.3
2004	-	185,876	143,397	32,004	480	42,471	90,000	11,096	505,324	115.0
2005	-	191,670	149,984	32,358	480	44,223	90,000	30,368	539,082	122.5
2006	-	197,566	156,833	32,714	480	46,038	90,000	45,552	569,183	127.1
2007	-	203,562	163,953	33,068	480	47,901	90,000	49,056	588,021	130.8
2008	-	209,734	171,449	33,420	480	49,803	90,000	49,056	603,942	134.6
2009	-	224,316	187,132	33,772	480	51,762	90,000	49,056	636,519	143.2
2010	-	236,278	200,608	34,125	480	53,780	90,000	49,056	664,327	149.2
2011	-	243,085	209,576	34,477	480	55,846	90,000	49,056	682,519	153.6

KINGMAN MWh Energy Sales ANNUAL GROWTH

	Irrigation	Residential	Commercial	Industrial	StLgt	PubAuth	Transm.	Special	Total	NCP
1995										
1996	10.0%	10.1%	6.5%	20.0%	-3.1%	6.1%	42.1%	#N/A	13.0%	6.7%
1997	-37.8%	4.1%	8.7%	-24.9%	-0.8%	9.7%	14.4%	#N/A	1.0%	11.5%
1998	-1.9%	5.3%	4.9%	-13.8%	-1.4%	7.6%	-22.3%	#N/A	-0.4%	-6.1%
1999	-100.0%	5.7%	2.1%	-22.7%	-12.7%	0.5%	39.2%	#N/A	3.3%	0.8%
2000	#N/A	9.6%	0.6%	-18.8%	-2.8%	10.5%	56.4%	#N/A	9.5%	18.3%
2001	#N/A	3.9%	2.2%	-7.3%	24.8%	7.4%	25.1%	#N/A	6.4%	5.1%
2001a		-6.1%	-2.5%	-0.6%	0.0%	-0.7%	0.0%		-3.2%	-0.2%
2002	#N/A	4.8%	9.2%	8.8%	-7.3%	0.3%	0.0%	#N/A	6.1%	5.2%
2003	#N/A	-2.3%	0.6%	1.1%	0.0%	4.8%	0.0%	33.3%	0.1%	0.2%
2004	#N/A	3.2%	5.7%	1.1%	0.0%	4.2%	0.0%	58.3%	4.0%	4.3%
2005	#N/A	3.1%	4.6%	1.1%	0.0%	4.1%	0.0%	173.7%	6.7%	6.5%
2006	#N/A	3.1%	4.6%	1.1%	0.0%	4.1%	0.0%	50.0%	5.6%	3.7%
2007	#N/A	3.0%	4.5%	1.1%	0.0%	4.0%	0.0%	7.7%	3.3%	2.9%
2008	#N/A	3.0%	4.6%	1.1%	0.0%	4.0%	0.0%	0.0%	2.7%	2.9%
2009	#N/A	7.0%	9.1%	1.1%	0.0%	3.9%	0.0%	0.0%	5.4%	6.4%
2010	#N/A	5.3%	7.2%	1.0%	0.0%	3.9%	0.0%	0.0%	4.4%	4.2%
2011	#N/A	2.9%	4.5%	1.0%	0.0%	3.8%	0.0%	0.0%	2.7%	2.9%

	KINGMAN Customers		KINGMAN Customers ANNUAL GROWTH	
	Residential	Commercial	Residential	Commercial
1995	19,308	2,093		
1996	20,144	2,169	4.3%	3.6%
1997	20,914	2,224	3.8%	2.5%
1998	21,401	2,205	2.3%	-0.9%
1999	22,407	2,466	4.7%	11.8%
2000	23,201	2,610	3.5%	5.9%
2001	23,862	2,701	2.8%	3.5%
2002	24,106	2,715	1.0%	0.5%
2003	24,557	2,740	1.9%	0.9%
2004	25,009	2,765	1.8%	0.9%
2005	25,460	2,790	1.8%	0.9%
2006	25,908	2,814	1.8%	0.9%
2007	26,354	2,838	1.7%	0.9%
2008	26,796	2,862	1.7%	0.8%
2009	27,235	2,885	1.6%	0.8%
2010	27,671	2,908	1.6%	0.8%
2011	28,105	2,931	1.6%	0.8%

LAKE HAVASU MWh Energy Sales

	Irrigation	Residential	Commercial	Industrial	StLgt	PubAuth	Transm.	Special	Total	NCP
1995	8	234,417	113,716	43,225	-	20,316	-	-	411,682	122.0
1996	5	253,500	118,031	48,713	-	23,315	-	-	443,564	119.8
1997	-	257,063	118,690	48,097	-	27,087	-	-	450,937	127.5
1998	6	271,115	124,450	39,703	-	28,910	10,991	-	475,175	136.6
1999	-	287,997	131,036	43,101	-	31,538	308	-	493,980	134.6
2000	-	317,133	138,043	40,652	-	36,497	-	-	532,325	149.9
2001	-	338,948	142,058	39,812	-	41,078	-	-	561,896	162.0
2001a	-	307,403	136,324	39,847	-	40,541	-		524,114	139.1
2002	-	339,349	140,528	46,743	-	37,745	-	7,592	571,958	163.2
2003	-	333,223	140,309	51,574	-	36,855	-	14,892	576,853	163.9
2004	-	342,867	143,453	55,948	-	39,752	-	14,892	596,912	169.4
2005	-	352,656	146,604	59,322	-	42,301	-	14,892	615,775	174.6
2006	-	362,579	149,816	62,800	-	44,972	-	14,892	635,059	180.0
2007	-	372,634	153,064	66,396	-	47,775	-	14,892	654,762	185.4
2008	-	382,912	156,365	70,115	-	50,754	-	14,892	675,038	191.0
2009	-	406,181	162,844	73,956	-	58,651	-	14,892	716,524	203.8
2010	-	424,862	168,150	77,922	-	65,468	-	14,892	751,294	212.6
2011	-	435,990	171,666	82,026	-	69,370	-	14,892	773,943	218.8

LAKE HAVASU MWh Energy Sales ANNUAL GROWTH

	Irrigation	Residential	Commercial	Industrial	StLgt	PubAuth	Transm.	Special	Total	NCP
1995										
1996	-37.5%	8.1%	3.8%	12.7%	#N/A	14.8%	#N/A	#N/A	7.7%	-1.8%
1997	-100.0%	1.4%	0.6%	-1.3%	#N/A	16.2%	#N/A	#N/A	1.7%	6.4%
1998	#N/A	5.5%	4.9%	-17.5%	#N/A	6.7%	#N/A	#N/A	5.4%	7.1%
1999	-100.0%	6.2%	5.3%	8.6%	#N/A	9.1%	-97.2%	#N/A	4.0%	-1.5%
2000	#N/A	10.1%	5.3%	-5.7%	#N/A	15.7%	-100.0%	#N/A	7.8%	11.4%
2001	#N/A	6.9%	2.9%	-2.1%	#N/A	12.6%	#N/A	#N/A	5.6%	8.0%
2001a	#N/A	-9.3%	-4.0%	0.1%	#N/A	-1.3%	#N/A		-6.7%	-14.1%
2002	#N/A	10.4%	3.1%	17.3%	#N/A	-6.9%	#N/A	#N/A	9.1%	17.3%
2003	#N/A	-1.8%	-0.2%	10.3%	#N/A	-2.4%	#N/A	96.2%	0.9%	0.4%
2004	#N/A	2.9%	2.2%	8.5%	#N/A	7.9%	#N/A	0.0%	3.5%	3.3%
2005	#N/A	2.9%	2.2%	6.0%	#N/A	6.4%	#N/A	0.0%	3.2%	3.1%
2006	#N/A	2.8%	2.2%	5.9%	#N/A	6.3%	#N/A	0.0%	3.1%	3.1%
2007	#N/A	2.8%	2.2%	5.7%	#N/A	6.2%	#N/A	0.0%	3.1%	3.0%
2008	#N/A	2.8%	2.2%	5.6%	#N/A	6.2%	#N/A	0.0%	3.1%	3.0%
2009	#N/A	6.1%	4.1%	5.5%	#N/A	15.6%	#N/A	0.0%	6.1%	6.7%
2010	#N/A	4.6%	3.3%	5.4%	#N/A	11.6%	#N/A	0.0%	4.9%	4.3%
2011	#N/A	2.6%	2.1%	5.3%	#N/A	6.0%	#N/A	0.0%	3.0%	2.9%

	L.HAVASU Customers		L.HAVASU Customers ANNUAL GROWTH	
	Residential	Commercial	Residential	Commercial
1995	21,560	2,656		
1996	22,223	2,715	3.1%	2.2%
1997	22,821	3,036	2.7%	11.8%
1998	23,578	2,565	3.3%	-15.5%
1999	24,789	3,030	5.1%	18.1%
2000	25,922	3,155	4.6%	4.1%
2001	26,949	3,265	4.0%	3.5%
2002	27,754	3,285	3.0%	0.6%
2003	28,274	3,322	1.9%	1.1%
2004	28,794	3,358	1.8%	1.1%
2005	29,313	3,395	1.8%	1.1%
2006	29,829	3,430	1.8%	1.1%
2007	30,343	3,466	1.7%	1.0%
2008	30,852	3,500	1.7%	1.0%
2009	31,357	3,535	1.6%	1.0%
2010	31,859	3,569	1.6%	1.0%
2011	32,358	3,602	1.6%	0.9%

W&P Data
Arizona and Counties

	PCE Deflator	Inflation	TOTAL POPULATION (IN THOUSANDS) ARIZONA	MOHAVE	SANTA CRUZ	TOTAL EMPLOYMENT (IN THOUSANDS OF JOBS) ARIZONA	MOHAVE	SANTA CRUZ	PERSONAL INCOME (IN MILLIONS OF 1996 DOLLARS) ARIZONA	MOHAVE	SANTA CRUZ	NUMBER OF HOUSEHOLDS (IN THOUSANDS) ARIZONA	MOHAVE	SANTA CRUZ	PERSONAL INCOME PER HOUSEHOLD (IN THOUSANDS OF 1996 DOLLARS) ARIZONA	MOHAVE	SANTA CRUZ
1969			1737.00	24.60	13.70	711.34	8.98	5.49	22669	334	154	521.09	8.11	3.72	43.503	41.171	41.519
1970			1799.30	26.44	14.13	746.65	9.30	5.98	24630	355	171	543.69	8.75	3.83	45.302	40.599	44.689
1971			1895.56	28.72	14.79	785.73	9.97	6.62	26915	394	191	578.36	9.58	4.02	46.537	41.075	47.541
1972			2008.05	31.06	15.67	849.70	10.83	7.04	29825	437	210	622.37	10.50	4.30	47.922	41.598	48.760
1973			2125.12	34.00	16.47	924.88	11.85	7.78	32882	499	234	667.47	11.61	4.55	49.264	42.977	51.533
1974			2223.80	36.53	17.31	955.10	13.27	8.10	33738	504	234	707.53	12.61	4.81	47.684	39.990	48.596
1975			2289.35	39.32	17.03	935.06	13.88	7.95	33255	536	245	734.28	13.65	4.74	45.289	39.253	51.617
1976			2347.02	42.38	17.82	976.10	14.59	8.06	35586	559	259	760.83	14.84	4.97	46.773	37.709	52.058
1977			2425.73	43.22	18.17	1047.48	15.77	8.11	37732	616	263	791.18	15.19	5.07	47.690	40.551	51.878
1978			2517.15	45.91	18.50	1149.08	17.63	8.66	41723	708	280	823.58	16.14	5.14	50.661	43.871	54.428
1979			2637.33	51.66	19.54	1241.15	20.07	9.07	45556	794	284	896.65	18.83	5.60	50.807	42.193	50.839
1980			2735.84	56.44	20.52	1284.90	21.35	9.40	47554	831	295	968.75	21.37	6.07	49.088	38.877	48.525
1981			2810.11	58.61	20.67	1317.03	21.66	9.64	49851	849	301	1003.91	22.43	6.05	49.657	37.862	49.718
1982			2889.88	62.54	21.69	1319.75	20.70	9.04	49625	849	294	1036.92	24.09	6.26	48.051	35.226	47.045
1983			2968.92	64.00	21.84	1383.19	21.17	8.60	52275	905	295	1067.23	24.76	6.19	48.982	36.563	47.601
1984			3067.12	67.37	22.79	1511.24	23.47	9.44	57590	1030	321	1113.88	26.41	6.41	51.702	38.990	50.121
1985			3183.54	70.77	23.53	1631.83	25.58	10.00	61916	1139	330	1164.91	28.02	6.54	53.151	40.638	50.527
1986			3308.27	75.37	24.04	1711.79	27.07	10.69	65797	1237	351	1220.06	29.83	6.78	53.929	41.482	51.684
1987			3437.10	77.31	25.63	1777.75	29.48	11.23	68885	1319	372	1271.50	30.42	7.32	54.176	43.355	50.863
1988			3535.20	82.38	26.87	1847.77	31.58	12.10	71188	1409	388	1318.51	32.40	7.80	53.992	43.496	49.753
1989			3622.18	87.04	28.78	1881.07	33.72	13.39	73309	1517	410	1354.16	34.05	8.45	54.136	44.541	48.488
1990	85.6		3679.05	95.19	29.89	1910.46	37.27	13.49	73945	1680	423	1376.18	37.00	8.86	53.732	45.411	47.811
1991	88.9	3.9%	3762.38	100.61	31.08	1918.42	39.23	13.63	74320	1715	430	1398.17	38.88	9.15	53.155	44.106	47.002
1992	91.6	3.0%	3867.33	105.50	32.32	1942.31	39.54	13.77	76530	1773	446	1445.10	41.01	9.56	52.958	43.234	46.627
1993	93.8	2.4%	3993.37	110.92	33.73	2028.60	40.81	14.51	79847	1872	467	1486.16	42.96	9.93	53.727	43.573	47.032
1994	95.7	2.0%	4147.54	116.32	34.98	2163.26	43.67	14.63	85697	2039	492	1546.37	45.14	10.31	55.418	45.165	47.729
1995	97.9	2.3%	4306.88	121.73	35.82	2282.15	44.32	14.51	90778	2049	497	1607.15	47.43	10.59	56.484	43.193	46.908
1996	100.0	2.1%	4432.31	125.84	36.19	2414.37	46.44	14.37	95787	2153	517	1656.81	49.11	10.71	57.814	43.848	48.269
1997	101.9	1.9%	4552.23	128.32	37.23	2506.54	47.75	15.10	101986	2269	546	1708.62	50.28	11.05	59.689	45.141	49.420
1998	103.0	1.1%	4667.27	130.64	38.16	2613.86	49.27	15.27	109649	2414	582	1761.57	51.44	11.38	62.245	46.929	51.155
1999	104.8	1.7%	4778.27	134.22	39.15	2697.07	51.16	15.64	114242	2528	608	1804.33	52.87	11.68	63.316	47.811	52.089
2000	107.2	2.3%	4889.20	136.46	39.70	2773.67	52.84	15.96	118797	2628	629	1850.83	53.88	11.87	64.186	48.783	52.954
2001	109.6	2.2%	5000.96	138.73	40.25	2846.20	53.36	15.96	123307	2676	635	1897.90	54.91	12.06	64.970	48.728	52.676
2002	112.3	2.5%	5112.93	141.03	40.81	2916.41	54.70	16.20	127824	2783	655	1945.16	55.95	12.26	65.714	49.737	53.397
2003	115.1	2.5%	5224.59	143.32	41.37	2984.09	56.89	16.69	132339	2908	681	1992.39	56.99	12.45	66.423	51.025	54.668
2004	118.1	2.6%	5335.83	145.61	41.92	3052.48	58.81	17.00	136963	3031	705	2039.47	58.03	12.65	67.156	52.230	55.736
2005	121.3	2.7%	5446.64	147.88	42.46	3121.32	60.23	17.23	141690	3135	724	2086.35	59.07	12.84	67.913	53.070	56.376
2006	124.7	2.8%	5557.26	150.18	43.00	3190.51	61.64	17.45	146521	3240	743	2132.96	60.10	13.03	68.694	53.921	57.024
2007	128.4	3.0%	5667.72	152.48	43.55	3259.97	63.06	17.66	151453	3348	762	2179.29	61.12	13.21	69.497	54.784	57.674
2008	132.3	3.0%	5777.99	154.77	44.09	3329.59	64.48	17.86	156488	3458	782	2225.24	62.13	13.40	70.324	55.664	58.336
2009	136.4	3.1%	5888.23	157.07	44.64	3399.40	65.90	18.06	161625	3571	801	2270.88	63.14	13.58	71.173	56.558	59.007
2010	140.8	3.2%	5998.45	159.38	45.18	3469.32	67.31	18.26	166866	3686	821	2316.23	64.14	13.76	72.042	57.468	59.688
2011	145.4	3.3%	6108.87	161.70	45.72	3539.36	68.74	18.45	172212	3803	842	2361.42	65.14	13.94	72.927	58.391	60.376